Workshop Manual

Audi A8 1994 ➤

8-cyl. TDI engine, mechanics									
Engine ID	AKF								

Edition 02.2005

Protected by copyright. Copying for private or commercial purposes, in part or in whole, is not permitted unless authorised by AUDI AG. AUDI AG does not guarantee or accept any liability with respect to the correctness of information in this document. Copyright by AUDI AG.

List of Workshop Manual Repair GroupsList of Workshop Manual Repair GroupsList of Workshop Manual Repair Groups

Repair Group

00 - Technical data
10 - Removing and installing engine
13 - Crankshaft group
15 - Cylinder head, valve gear
17 - Lubrication
19 - Cooling
21 - Turbocharging/supercharging
26 - Exhaust system

Protected by copyright. Copying for private or commercial purposes, in part or in whole, is not permitted unless authorised by AUDI AG. AUDI AG does not guarantee or accept any liability with respect to the correctness of information in this document. Copyright by AUDI AG.

Technical information should always be available to the foremen and mechanics, because their careful and constant adherence to the instructions is essential to ensure vehicle road-worthiness and safety. In addition, the normal basic safety precautions for working on motor vehicles must, as a matter of course, be observed.

All rights reserved.
No reproduction without prior agreement from publisher.

Copyright © 2010 Audi AG, Ingolstadt

A0050809020

Contents

00 - Technical data . . . 1
1 Technical data . . . 1
1.1 Engine number . . . 1
1.2 Engine features . . . 1
2 General repair instructions . . . 2
2.1 Rules for cleanliness when working on injection system . . . 2
2.2 Checking fuel system for leaks . . . 2
3 Contact corrosion . . . 3

10 - Removing and installing engine . . . 4
1 Removing and installing engine . . . 4
1.1 Removing lock carrier . . . 5
1.2 Removing engine . . . 11
1.3 Separating engine and gearbox . . . 22
1.4 Attaching engine to repair stand . . . 26
1.5 Installing engine . . . 26

13 - Crankshaft group . . . 31
1 Dismantling and assembling engine . . . 31
1.1 Pulling lock carrier forwards . . . 31
1.2 Exploded view of poly V-belt drive for hydraulic pump, alternator and air conditioner compressor . . . 35
1.3 Removing and installing poly V-belt . . . 36
1.4 Checking alignment of hydraulic pump and air conditioner compressor pulleys . . . 37
1.5 Removing and installing vibration damper . . . 39
1.6 Exploded view of toothed belt guards . . . 40
1.7 Exploded view of toothed belt drive for camshafts . . . 41
1.8 Turning engine to TDC - engine in position . . . 43
1.9 Turning engine to TDC - engine removed . . . 48
1.10 Removing and installing toothed belt . . . 51
1.11 Detaching toothed belt from camshaft sprockets . . . 58
2 Servicing work on pulley end . . . 63
2.1 Exploded view of sealing flanges and drive plate . . . 63
2.2 Replacing crankshaft oil seal on pulley end . . . 64
2.3 Removing and installing front sealing flange . . . 66
2.4 Removing and installing rear sealing flange . . . 69
2.5 Removing and installing drive plate . . . 70
3 Removing and installing crankshaft . . . 72
3.1 Exploded view of crankshaft . . . 72
3.2 Crankshaft dimensions . . . 73
3.3 Measuring crankshaft axial clearance . . . 74
3.4 Measuring crankshaft radial clearance . . . 74
4 Dismantling and assembling pistons and conrods . . . 76
4.1 Exploded view of pistons and conrods . . . 76
4.2 Checking piston projection at TDC . . . 79
4.3 Piston and cylinder dimensions . . . 80
4.4 Checking radial clearance of conrods . . . 80

15 - Cylinder head, valve gear . . . 82
1 Removing and installing cylinder head . . . 82
1.1 Exploded view of cylinder head cover . . . 82
1.2 Removing and installing left cylinder head cover . . . 84

Protected by copyright. Copying for private or commercial purposes, in part or in whole, is not permitted unless authorised by AUDI AG. AUDI AG does not guarantee or accept any liability with respect to the correctness of information in this document. Copyright by AUDI AG.

1.3 Removing and installing right cylinder head cover . . . 91
1.4 Exploded view of cylinder head . . . 98
1.5 Removing and installing vacuum pump . . . 99
1.6 Removing left cylinder head . . . 103
1.7 Removing right cylinder head . . . 108
1.8 Installing cylinder head . . . 113
1.9 Exploded view of intake manifold . . . 117
1.10 Removing and installing rear air pipe . . . 118
1.11 Checking compression . . . 123
2 Servicing valve gear . . . 127
2.1 Exploded view of valve gear . . . 127
2.2 Checking axial clearance of camshafts . . . 129
2.3 Replacing oil seals for camshafts . . . 130
2.4 Removing and installing camshafts . . . 131
2.5 Replacing valve stem seals . . . 135
2.6 Checking hydraulic valve lifters . . . 138
2.7 Valve dimensions . . . 139
2.8 Checking valve guides . . . 139
2.9 Checking valves . . . 140

17 - Lubrication . . . 141
1 Removing and installing lubrication system components . . . 141
1.1 Exploded view of oil pump, bottom part of sump . . . 141
1.2 Removing and installing bottom part of sump . . . 142
1.3 Removing and installing chain drive for oil pump . . . 145
1.4 Removing and installing oil pump . . . 146
1.5 Exploded view of top part of sump . . . 147
1.6 Removing and installing top part of sump . . . 148
1.7 Exploded view of oil filter bracket with oil cooler . . . 151
1.8 Removing and installing oil filter bracket with oil cooler . . . 152
1.9 Exploded view of oil retention valves and spray nozzle valve . . . 159
1.10 Replacing oil retention valves and spray nozzle valve . . . 159
1.11 Checking oil pressure and oil pressure switch . . . 160
1.12 Engine oil . . . 161
1.13 Checking oil level . . . 161
1.14 Exploded view of crankcase breather components . . . 162
1.15 Checking pressure control valve for crankcase breather . . . 163

19 - Cooling . . . 164
1 Removing and installing cooling system components . . . 164
1.1 Exploded view of mechanical coolant pump and thermostat . . . 165
1.2 Draining and replenishing coolant . . . 166
1.3 Removing and installing mechanical coolant pump . . . 173
1.4 Removing, installing and checking thermostat . . . 174
1.5 Exploded view of coolant pipes . . . 176
1.6 Removing and installing front coolant pipe . . . 177
1.7 Removing and installing left coolant pipe . . . 178
1.8 Removing and installing right coolant pipe . . . 179
1.9 Removing and installing rear coolant pipe . . . 180
1.10 Removing and installing radiator . . . 182
1.11 Checking cooling system for leaks . . . 186
1.12 Exploded view of hydraulic fan . . . 187
1.13 Removing and installing hydraulic fan . . . 187
1.14 Checking radiator fan valve N313 . . . 190
1.15 Removing and installing hydraulic pump for power steering and hydraulic fan . . . 193
1.16 Checking electric radiator fan V7 and actuation . . . 197

Reproduction of this publication for commercial purposes, in part or in whole, is not permitted unless authorised by AUDI AG. AUDI AG does not guarantee or accept any liability with respect to the correctness of information in this document. Copyright by AUDI AG.

1.17 Removing and installing electric radiator fan V7 . . . 200
1.18 Checking relay for fuel cooling pump V166 . . . 201
1.19 Removing and installing fuel cooler . . . 205
1.20 Checking charge air cooling pump V188 . . . 208
1.21 Removing and installing charge air cooler . . . 212

21 - Turbocharging/supercharging . . . 215

1 Checking charge air system with turbocharger . . . 215
1.1 Notes on safety . . . 215
1.2 Test requirements for checking turbocharging . . . 215
1.3 Effects of leakage on inlet and exhaust end . . . 216
1.4 Checking turbocharger and charge pressure control . . . 217
1.5 Connection diagram for charge pressure control . . . 225
1.6 Exploded view of charge pressure control solenoid valves N75 and N274 . . . 226
1.7 Checking charge pressure control solenoid valves N75 and N274 . . . 227
1.8 Checking charge pressure of turbochargers . . . 231
1.9 Checking intake manifold pressure sender G71 . . . 233

2 Servicing charge air system with turbocharger . . . 237
2.1 Rules for cleanliness . . . 237
2.2 Exploded view of turbocharger . . . 238
2.3 Removing and installing left turbocharger . . . 239
2.4 Removing and installing right turbocharger . . . 243

26 - Exhaust system . . . 246

1 Removing and installing exhaust system components . . . 246
1.1 Exploded view of exhaust system . . . 246
1.2 Separating centre and rear silencer . . . 251
1.3 Removing and installing left front exhaust pipe with oxidation catalytic converter . . . 252
1.4 Removing and installing right front exhaust pipe with oxidation catalytic converter . . . 259
1.5 Exploded view of exhaust manifold . . . 265
1.6 Removing and installing left exhaust manifold . . . 266
1.7 Removing and installing right exhaust manifold . . . 267
1.8 Stress-free alignment of exhaust system . . . 268
1.9 Checking exhaust system for leaks . . . 269

2 Exhaust gas recirculation system . . . 270
2.1 Connection diagram for exhaust gas recirculation . . . 270
2.2 Checking exhaust gas recirculation . . . 270
2.3 Checking exhaust gas recirculation valves N18 and N213 . . . 273
2.4 Checking mechanical exhaust gas recirculation valve . . . 277
2.5 Exploded view of exhaust gas recirculation system . . . 278
2.6 Removing and installing mechanical exhaust gas recirculation valves . . . 279

Protected by copyright. Copying for private or commercial purposes, in part or in whole, is not permitted unless authorised by AUDI AG. AUDI AG does not guarantee or accept any liability with respect to the correctness of information in this document. Copyright by AUDI AG.

Protected by copyright. Copying for private or commercial purposes, in part or in whole, is not permitted unless authorised by AUDI AG. AUDI AG does not guarantee or accept any liability with respect to the correctness of information in this document. Copyright by AUDI AG.

00 – Technical data

1 Technical data

1.1 Engine number

The engine number (“engine code” and “serial number”) can be found at the front left of the cylinder block beneath the exhaust manifold.

In addition, a sticker indicating the “engine code” and “serial number” is affixed to the high-pressure pump.

The engine code is also indicated on the vehicle data sticker.

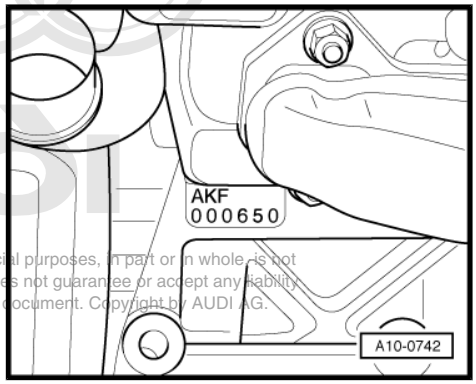

Protected by copyright. Copying for private or commercial purposes, in part or in whole, is not permitted unless authorised by AUDI AG. AUDI AG does not guarantee or accept any liability with respect to the correctness of information in this document. Copyright by AUDI AG.

1.2 Engine features

Code letters		AKF
Capacity	l	3,3
Power	kW at rpm	165/4000
Torque	Nm at rpm	480/1800 … 3000
Bore	∅ mm	78,3
Stroke	mm	86,4
Compression ratio		18,0
CN	min	45
Firing order		1-5-4-8-6-3-7-2
Exhaust gas recirculation		yes
Charging		yes
Self-diagnosis		yes
Catalytic converter		yes
Charge air cooling		yes

2 General repair instructions

2.1 Rules for cleanliness when working on injection system

Even slight contamination can lead to injection system faults. The following rules for cleanliness are therefore to be carefully heeded when working on the fuel supply/injection system:

- Thoroughly clean joints and surrounding areas with engine or brake cleaner before unfastening and make sure the cleaned area is completely dry.
- Immediately seal off open pipes and connections with suitable caps.
- Place parts removed on a clean surface and cover over. Only use lint-free cloths.
- Only install clean components: Leave replacement parts in their wrapping until immediately prior to installation. Never use parts which have been stored loose (e.g. in tool chests etc.).
- When the system is open: Do not work with compressed air. Do not move the vehicle unless absolutely necessary.

Protected by copyright. Copying for private or commercial purposes, in part or in whole, is not permitted unless authorised by AUDI AG. AUDI AG does not guarantee or accept any liability with respect to the correctness of information in this document. Copyright by AUDI AG.

2.2 Checking fuel system for leaks

- Run the engine at moderate speed for a few minutes.
- Switch off ignition.
- Check the entire fuel system for leaks.
- If leakage is found although the tightening torque is correct, the component concerned must be replaced.
- Then perform a test drive, accelerating at least once to full load.
- Subsequently re-check the high-pressure area for leaks.

3 Contact corrosion

Contact corrosion can occur if use is made of unsuitable connecting elements (bolts, nuts, washers …).

For this reason, only connecting elements with a special surface coating are fitted. These elements can be recognised from their greenish colour.

In addition, rubber and plastic parts as well as adhesives are made of non-conductive material.

In cases of doubt about suitability for re-use, always fit new components.

Caution

- *Only use genuine Audi components.*
- *Accessories must have been approved by Audi AG.*
- *Damage caused by contact corrosion is not covered by warranty.*

Protected by copyright. Copying for private or commercial purposes, in part or in whole, is not permitted unless authorised by AUDI AG. AUDI AG does not guarantee or accept any liability with respect to the correctness of information in this document. Copyright by AUDI AG.

10 – Removing and installing engine

1 Removing and installing engine

Note

- *With the lock carrier detached, the engine is removed to the front together with the gearbox.*
- *Collect drained coolant in a clean container for disposal or re-use.*
- *Re-attach all cable ties unfastened or severed on removal at the same location on installation.*

Special tools and workshop equipment required

- Shackle -10-222 A/12-
- Lifting tackle -3033-
- Hose clamps up to Ø 25 mm -3094-
- Workshop crane -VAS 6100- or -V.A.G 1202 A-
- Drip tray for workshop cranes -VAS 6208- or -V.A.G 1306-
- Used oil collector and extractor -V.A.G 1782- or -V.A.G 1358 A-

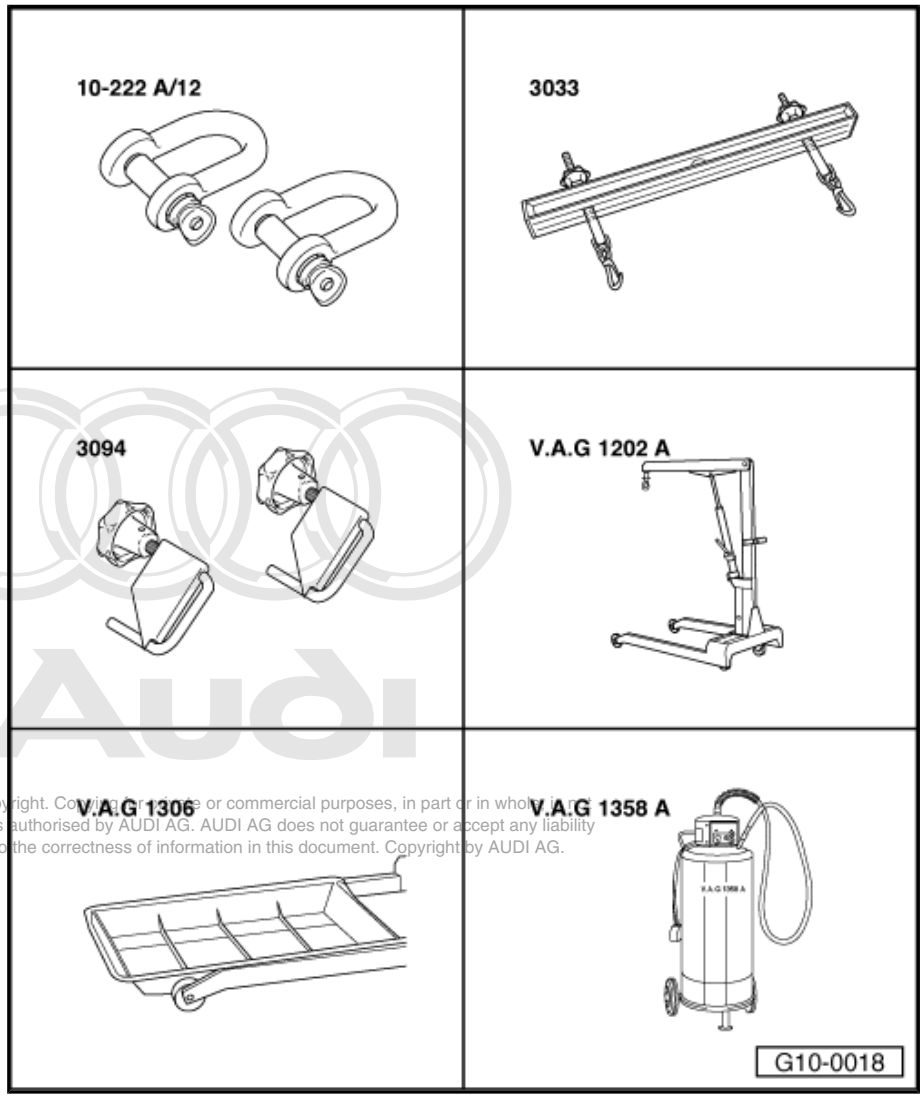

Protected by copyright. Copying for private or commercial purposes, in part or in whole, is not permitted unless authorised by AUDI AG. AUDI AG does not guarantee or accept any liability with respect to the correctness of information in this document. Copyright by AUDI AG.

- Engine and gearbox lifter -V.A.G 1383 A-
- Ejection tool -VAS 1978/8- from wiring harness repair set -VAS 1978-
- Puller -T40010-

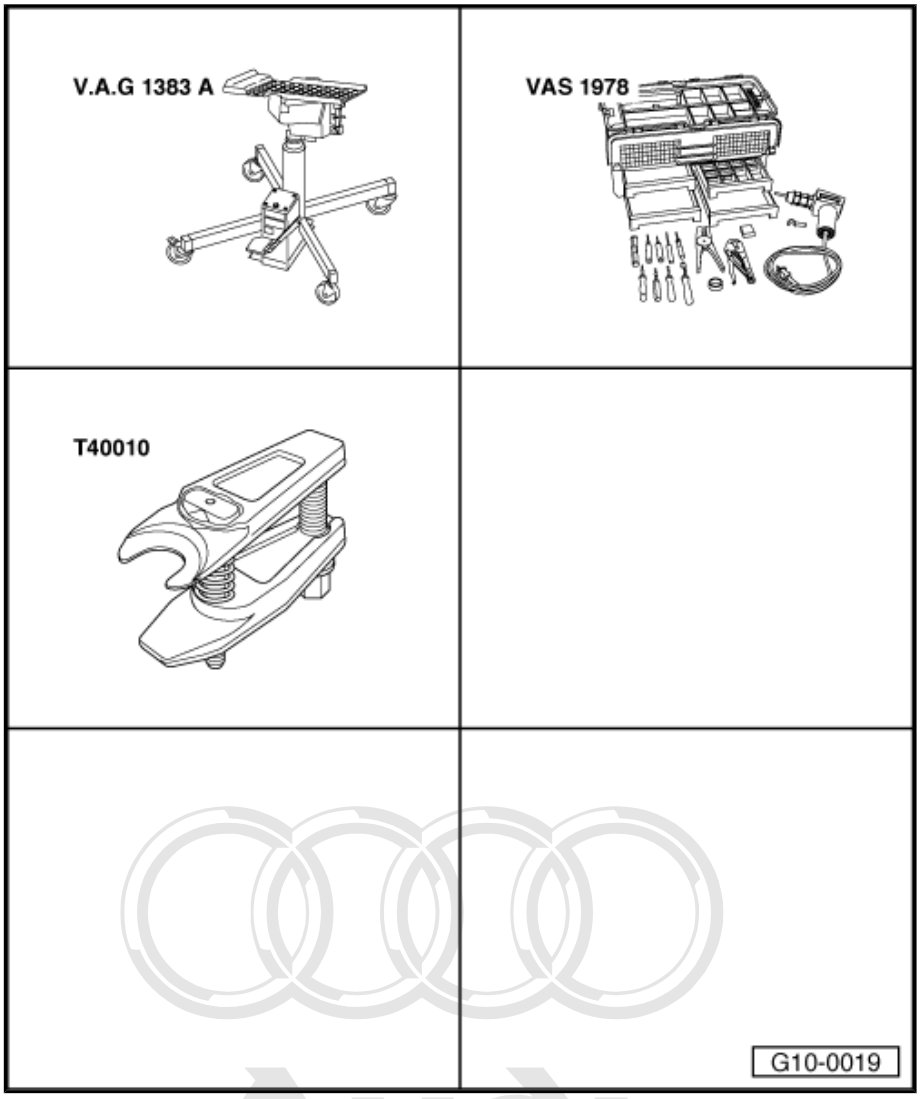

1.1 Removing lock carrier

Protected by copyright. Copying for private or commercial purposes, in part or in whole, is not permitted unless authorised by AUDI AG. AUDI AG does not guarantee or accept any liability with respect to the correctness of information in this document. Copyright by AUDI AG.

Caution

On vehicles with telematics system, activate service mode of telematics control unit before disconnecting battery ⇒ Radio, telephone, navigation self-diagnosis; Rep. Gr. 01 .

– Pay attention to and if necessary establish code for vehicles with encoded radio set/radio navigation system (RNS).

– With ignition switched off, disconnect earth strap/cable at negative terminal -arrow- of battery (in luggage compartment on right beneath cover).

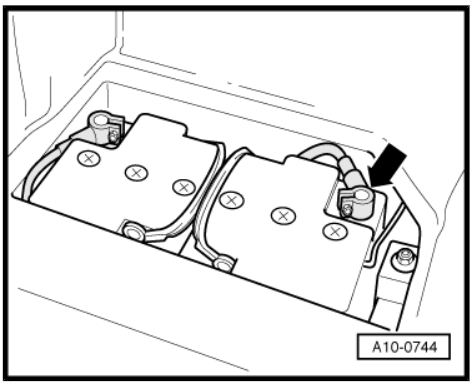

WARNING

Hot vapour/coolant may escape when opening the expansion tank. Cover the cap with a cloth and open carefully.

– Open cap of coolant expansion tank.
– Remove both front wheels.
– On vehicles with auxiliary heater, screw out bolts -arrows- for attaching exhaust pipe of auxiliary/supplementary heater to noise insulation.

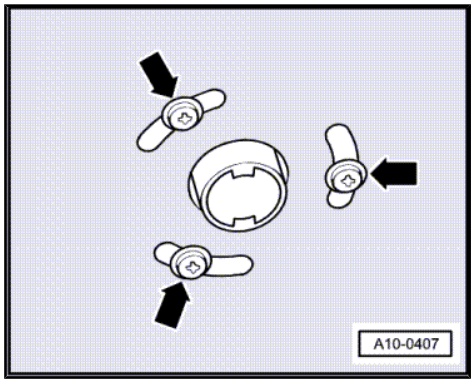

– Unfasten quick-release fasteners -1- and -2- and detach front and rear noise insulation.

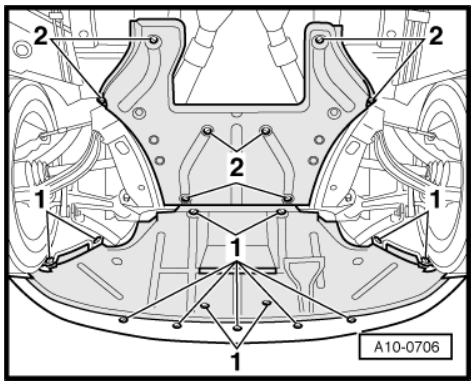

– Place drip tray for workshop cranes -VAS 6208- or -V.A.G 1306- beneath engine.
– Screw out drain plugs -1 … 3- and drain off coolant.

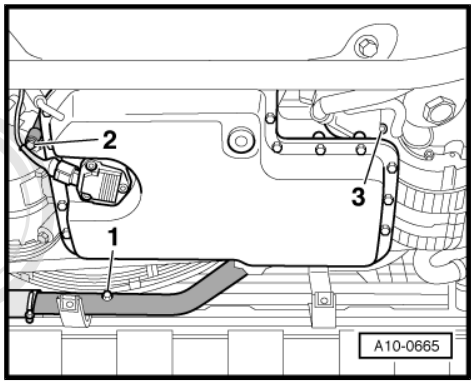

– Pull out clip -1- and detach coolant hose from radiator.
– Detach coolant hose -2-.

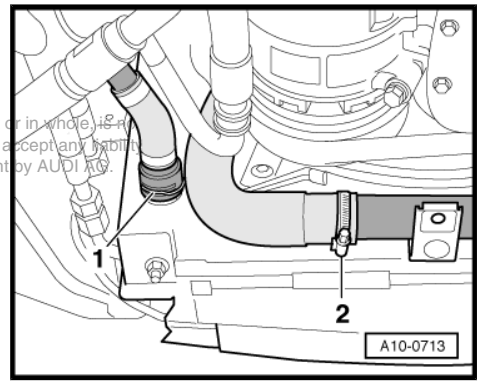

Protected by copyright. Copying for private or commercial purposes, in part or in whole, is not permitted unless authorised by AUDI AG. AUDI AG does not guarantee or accept any liability with respect to the correctness of information in this document. Copyright by AUDI AG.

– Unscrew ATF pipe at bottom from radiator -arrow-.

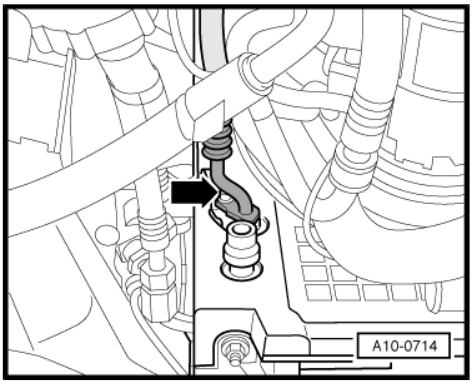

Note

Heed rules for cleanliness when working on automatic gearbox
⇒ Automatic gearbox 01L, four-wheel drive; Rep. Gr. 37 .

– Unplug connector -2- to electric radiator fan in front of left wheel housing.
– Lay bare wire.
– Unfasten front area of front wheel housing liner.

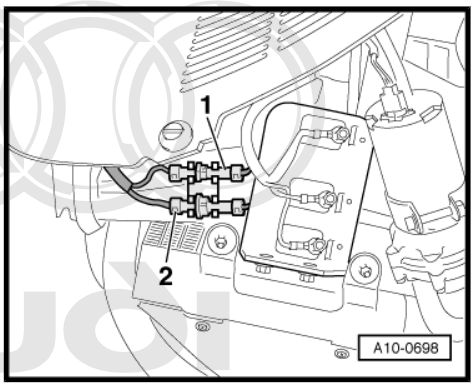

– Unfasten clips -1- and -2- and detach air duct grille on left and right.

Reproduction or provision of copies for private or commercial purposes, in part or in whole, is not permitted unless authorised by AUDI AG. AUDI AG does not guarantee or accept any liability with respect to the correctness of information in this document. Copyright by AUDI AG.

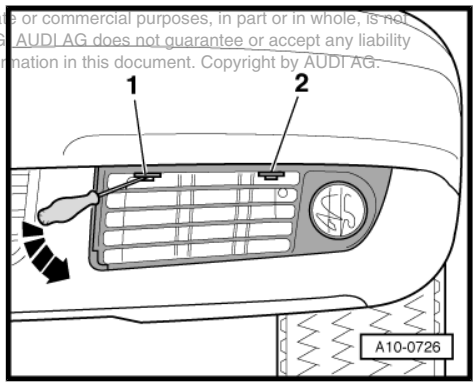

– Screw out bolt in opening -arrow- at bumper on left and right.
– Pull bumper slightly to front and unplug connectors.

Vehicles with headlight washer system:

– Use hose clamp -3094- to pinch off hose to headlight washer system upstream of T-piece.
– Detach hose at T-piece.

All models:

– Detach bumper.

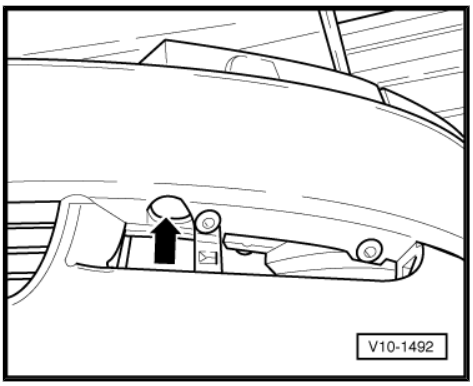

– Unclip cover -2- for air duct at lock carrier.
– Remove air duct -1-.

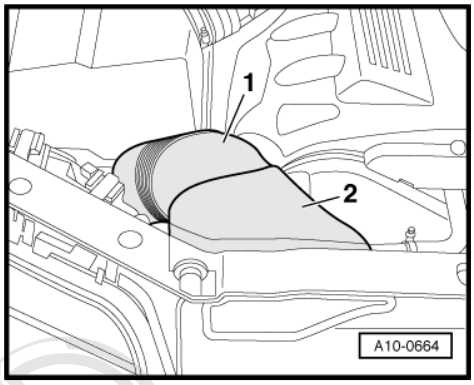

– Detach engine cover -arrows-.

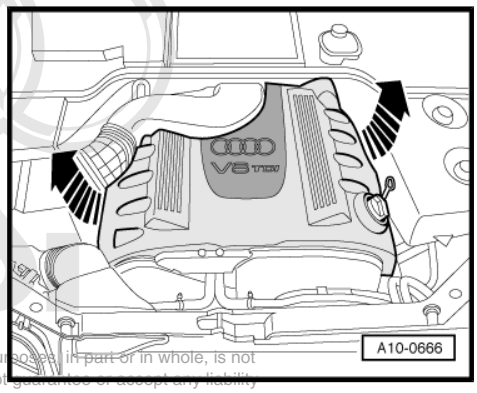

Protected by copyright. Copying for private or commercial purposes, in part or in whole, is not permitted unless authorised by AUDI AG. AUDI AG does not guarantee or accept any liability with respect to the correctness of information in this document. Copyright by AUDI AG.

– Remove cover on left in engine compartment -arrows-.
– Draw off power steering hydraulic fluid from reservoir with used oil collector and extractor -V.A.G 1782- or -V.A.G 1358 A- .

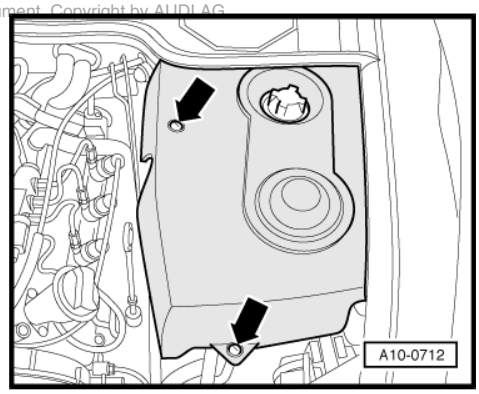

– Detach power steering hydraulic pressure pipes -1 … 4-.

Note

Place a cloth beneath hydraulic pressure pipes to catch hydraulic fluid escaping.

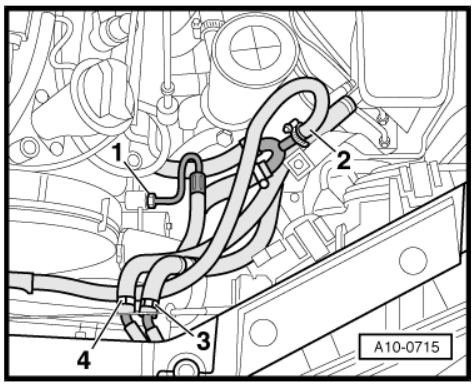

– Disengage cable -1- for bonnet at locking lever on left and right and lay bare.

– Unscrew ATF pipe at top from radiator -arrow-.

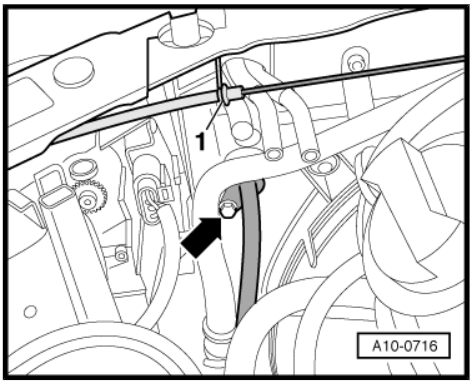

Note

- *Heed rules for cleanliness when working on automatic gearbox ⇒ Automatic gearbox 01L, four-wheel drive; Rep. Gr. 37 .*
- *Lift ATF pipes clear and tie in place on engine to stop fluid escaping.*

– Detach coolant hoses behind lock carrier -arrows-.

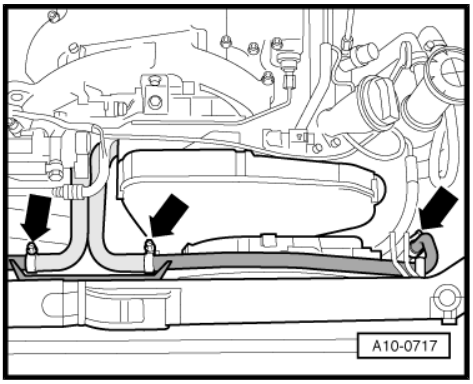

Protected by copyright. Copying for private or commercial purposes, in part or in whole, is not permitted unless authorised by AUDI AG. AUDI AG does not guarantee or accept any liability with respect to the correctness of information in this document. Copyright by AUDI AG.

– Detach coolant hose at top right of radiator -arrow-.

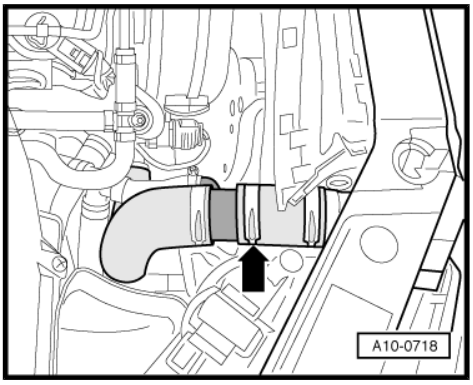

– Unplug connectors -arrows- for headlights and turn signal indicators on left and right (this involves unclipping cover at right headlight).

– Lay bare wires.

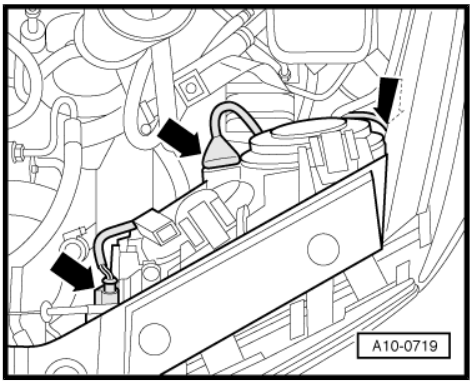

– Unscrew trim -arrow- on left and right and detach to front.

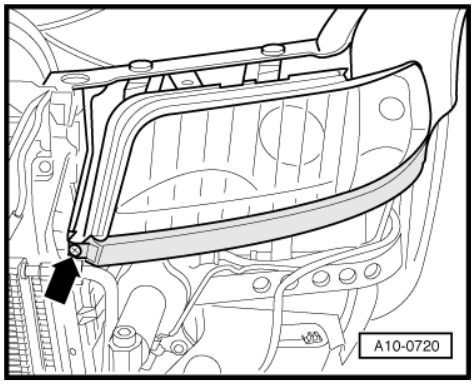

– Unplug connectors -arrows-.

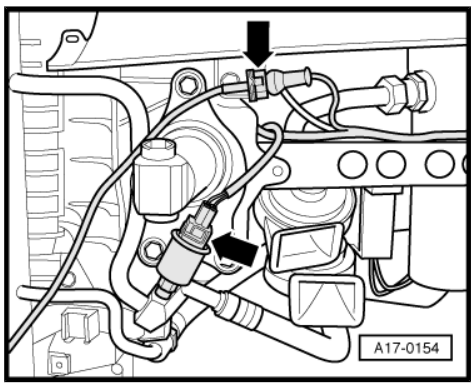

– Remove air ducts on left and right at radiator.
– Screw out bolts -1- and -2-.
– Detach power steering hydraulic fluid cooler.
– Detach air duct at bottom -3-.
– Pull condenser upwards out of holders, swivel aside to left and tie in place on body.

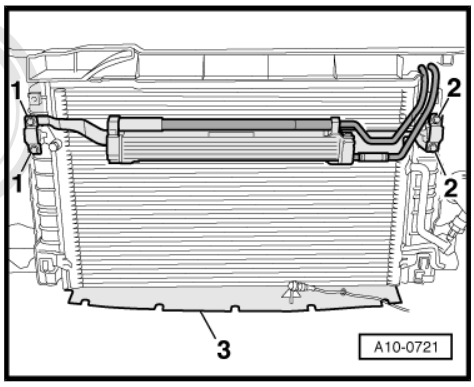

– Unscrew impact absorber on left and right -arrows-.

Transmission, copying or storage for commercial purposes, in part or in whole, is not permitted unless authorised by AUDI AG. AUDI AG does not guarantee or accept any liability with respect to the correctness of information in this document. Copyright by AUDI AG.

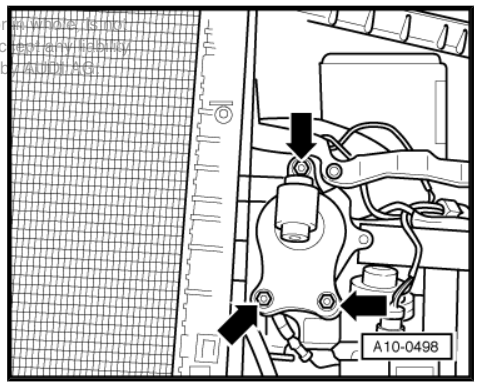

– Detach rubber sealing lip on inside at wings on left and right and screw out bolt -arrow- beneath rubber sealing lip.
– Detach lock carrier.

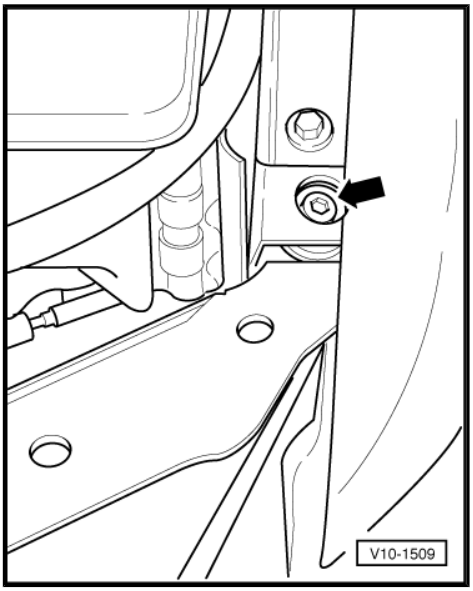

Note

A second mechanic is required for detaching the lock carrier.

1.2 Removing engine

- Lock carrier removed ⇒ page 5
– Remove cover on right in engine compartment -arrows-.

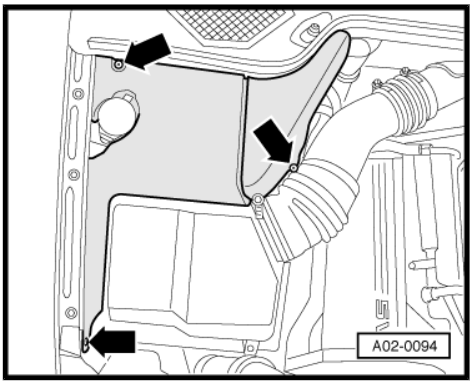

– Unfasten hose clamp -1-.
– Remove air cleaner housing -arrows-.

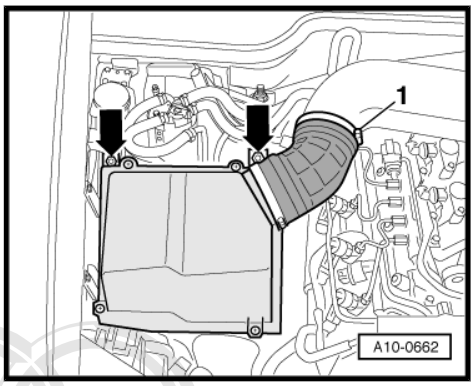

– Remove top air pipe -arrows-.

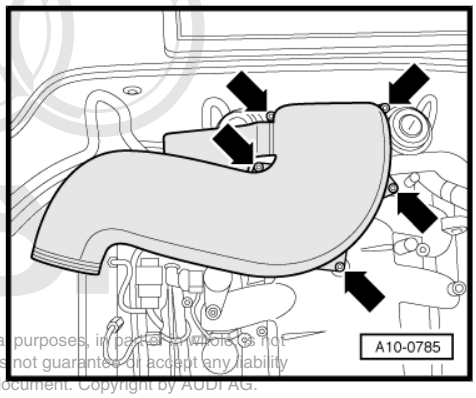

Note

Seal off inlet connections with clean cloths.

Protected by copyright. Copying for private or commercial purposes, in part or in whole, is not permitted unless authorised by AUDI AG. AUDI AG does not guarantee or accept any liability with respect to the correctness of information in this document. Copyright by AUDI AG.

– Mark position of coolant hoses.
– Remove coolant hoses -arrows- between engine and heating system heat exchanger.

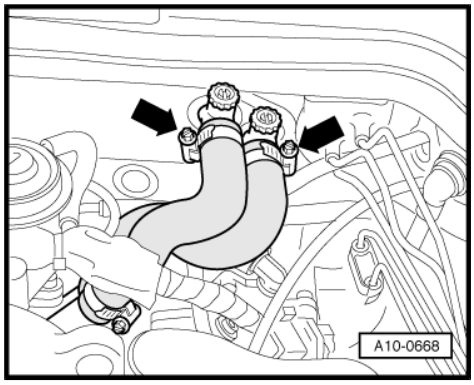

– Detach vacuum hoses -arrows-.
– Lay bare vacuum hoses.
– Unclip plastic holder of grey connector from bulkhead holder.

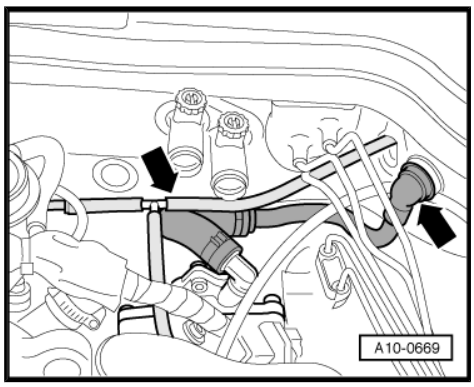

– Detach and lay bare coolant hoses -arrows-.

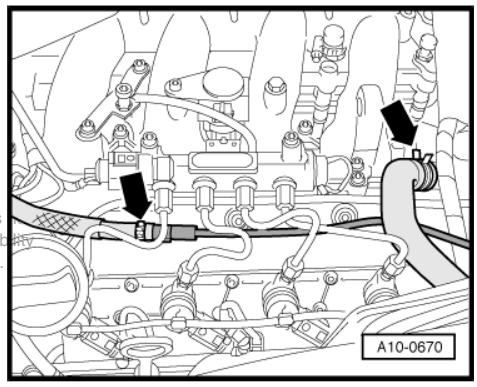

Protected by copyright. Copying for private or commercial purposes, in part or in whole, is permitted unless authorised by AUDI AG. AUDI AG does not guarantee or accept any liability with respect to the correctness of information in this document. Copyright by AUDI AG.

– Detach distributor pipe -1- for hydraulic fluid from inlet hose -arrow- and attach it to engine using a piece of wire.

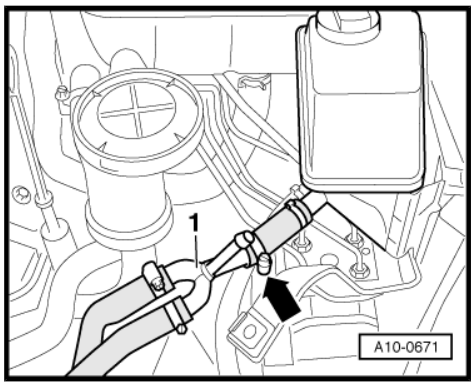

– Detach crankcase breather hoses -1 … 3-.
– Lift hose -3- clear and tie in place on engine.

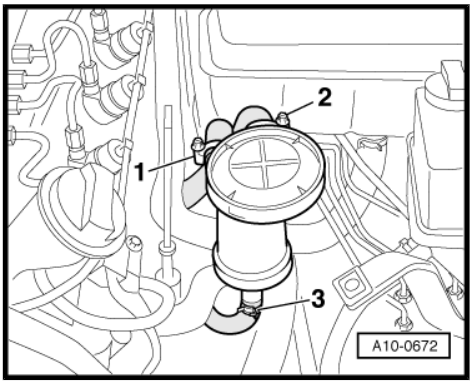

– Unscrew hydraulic pressure pipe at hydraulic pump -arrow-.

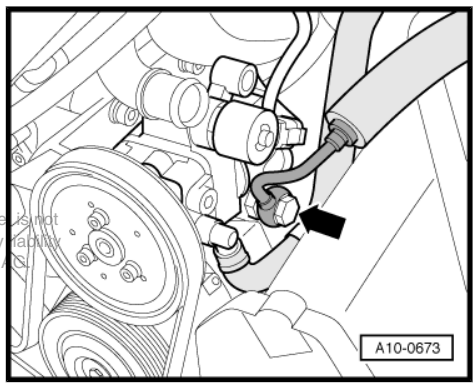

Protected by copyright. Copying for private or commercial purposes, in part or in whole, is not permitted unless authorised by AUDI AG. AUDI AG does not guarantee or accept any liability with respect to the correctness of information in this document. Copyright by AUDI AG.

Note

Prior to removal, mark direction of poly V-belt with chalk or a felt-tip pen. Running a used belt in the opposite direction could destroy it.

– Swivel tensioner in -direction of arrow- to slacken off poly V-belt.
– Detach poly V-belt.

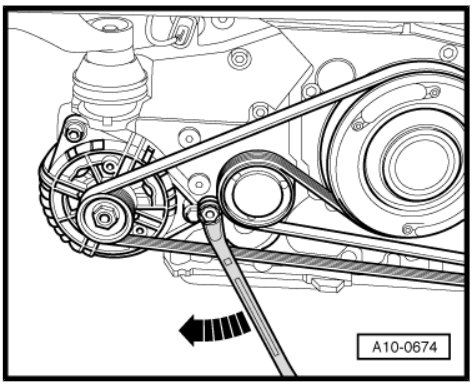

– Mark position of coolant hoses.
– Detach coolant hoses -arrows-.

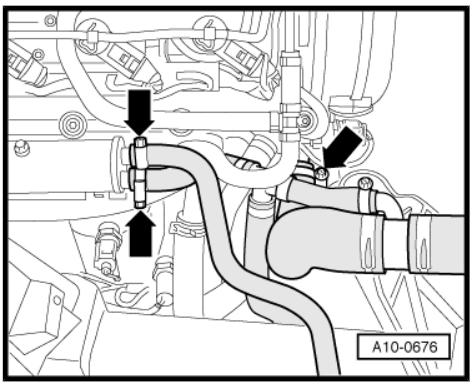

– Detach coolant hoses -arrows-.

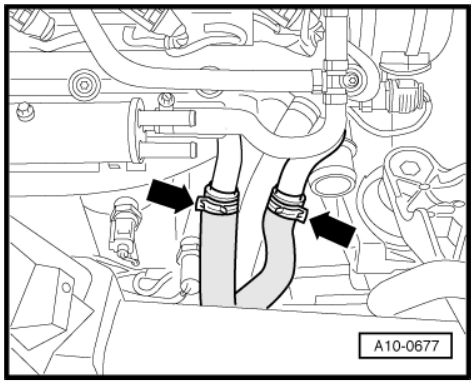

– Detach fuel return pipe at T-piece and fuel supply pipe at fuel filter -arrows-.

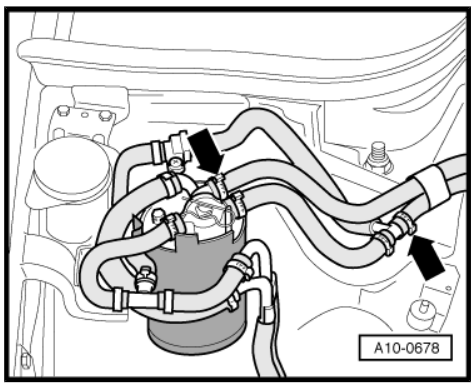

– Slacken off cross-head bolts -1- at electronics box in plenum chamber.
– Unclip plenum chamber cover -2- at front at bulkhead -arrows-.
– Detach right plenum chamber cover.

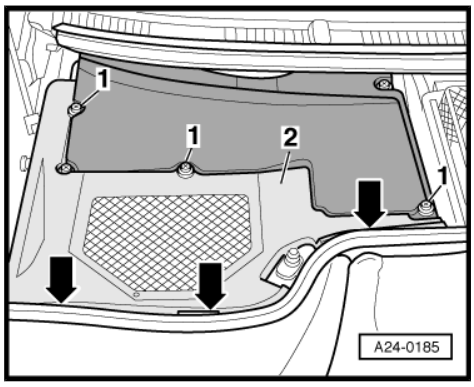

– Detach left plenum chamber cover -arrows-.

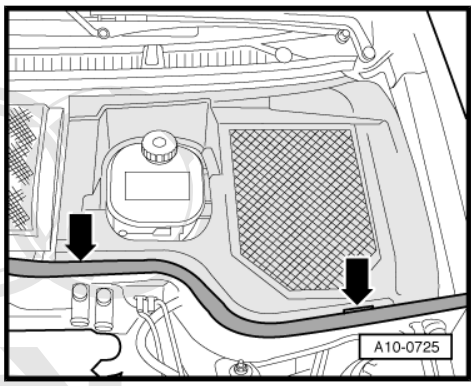

Protected by copyright. Copying for private or commercial purposes, in part or in whole, is not permitted unless authorised by AUDI AG. AUDI AG does not guarantee or accept any liability with respect to the correctness of information in this document. Copyright by AUDI AG.

– Detach plenum chamber seal -1-.
– Unscrew dome brace -2- -arrows-.

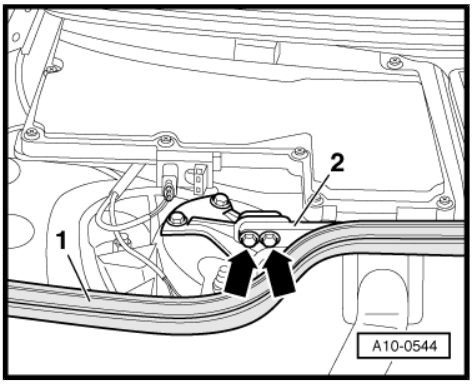

– Prise out cover -1- in scuttle panel trim and slacken off rear cross-head bolt -rear right arrow-.
– Slacken off the remaining cross-head bolts -arrows-.
– Detach cover for electronics box in plenum chamber.

Protected by copyright. Copying for private or commercial purposes, in part or in whole, is not permitted unless authorised by AUDI AG. AUDI AG does not guarantee or accept any liability with respect to the correctness of information in this document. Copyright by AUDI AG.

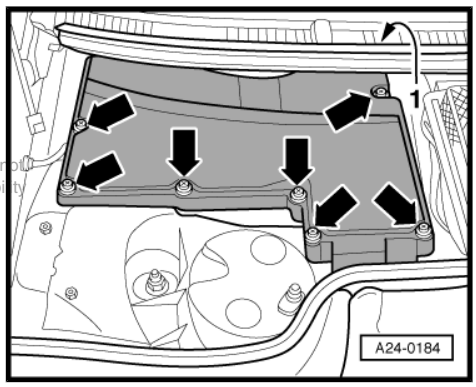

– Screw out bolt -arrow-.
– Disengage retainer.
– Detach engine control units -1- and -2-. Release and unplug connectors.
– Release and unplug connector -3- for gearbox control unit.

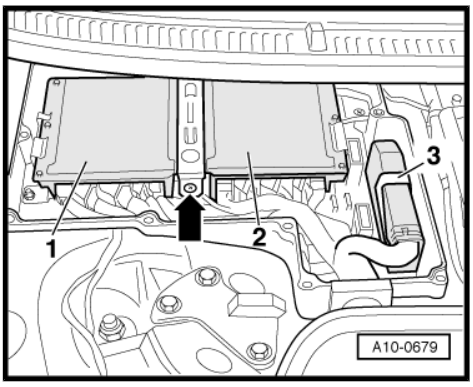

– Unscrew retaining plate for engine control units -arrows-.

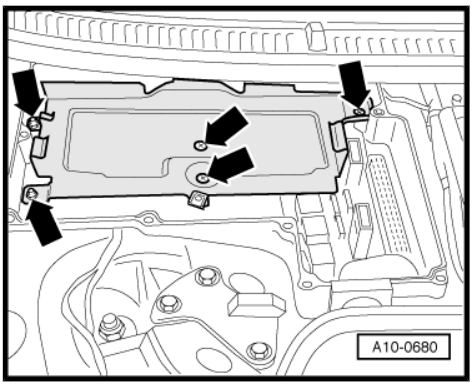

– Screw out bolts -arrows-.
– Remove relay carrier -1-.
– Unplug all connectors at connector point -2-.
– Release the two fuse boxes -3- and -4- at relay carrier and lift them off.
– Detach fuses.

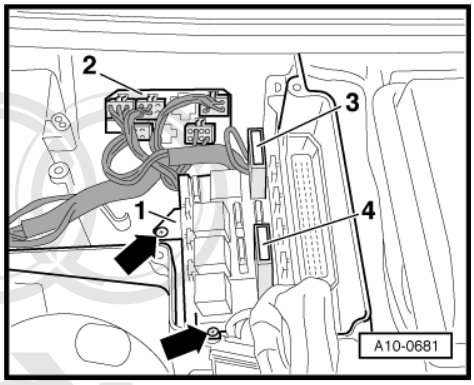

Note

Mark position of wires.

Protected by copyright. Copying for private or commercial purposes, in part or in whole, is not permitted unless authorised by AUDI AG. AUDI AG does not guarantee or accept any liability with respect to the correctness of information in this document. Copyright by AUDI AG.

– Release plug contact in plug panel -2- in each case using ejection tool -VAS 1978/8- from wiring harness repair set -VAS 1978- .

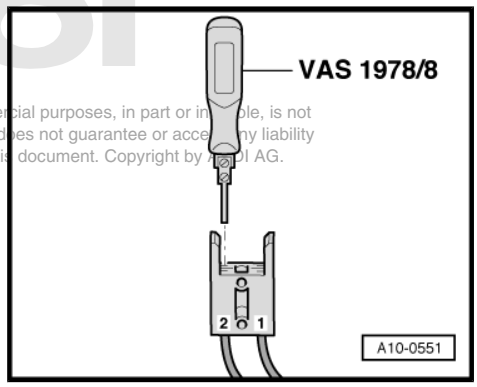

– Unscrew clip at bulkhead -arrow-.
– Lay bare wiring harness.
– Set down wiring harness on engine.

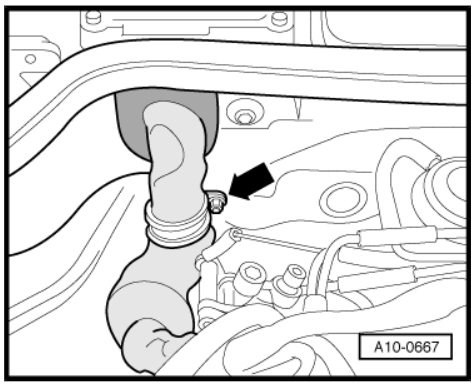

– Detach air duct to alternator -arrow-.

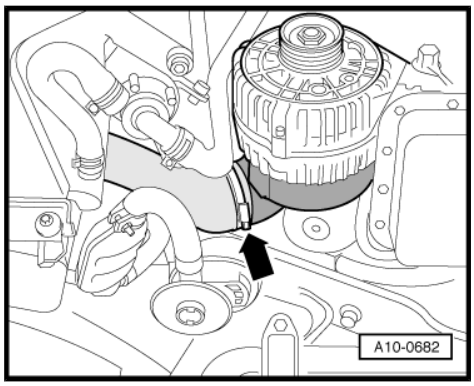

– Unplug green connector -1- for air conditioner compressor magnetic clutch in front of left wheel housing and lay bare wire.

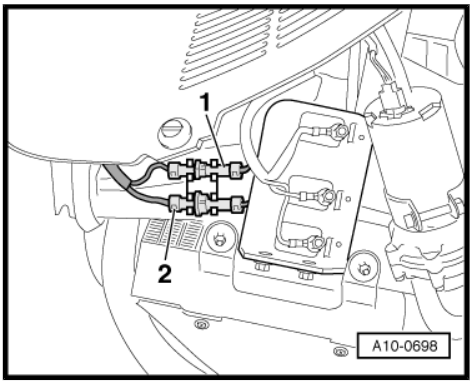

> ⚠ WARNING
>
> *The air conditioner refrigerant circuit is not to be opened.*

– Unscrew air conditioner compressor from holder -arrows-, lift clear to side and tie in place at body longitudinal member.

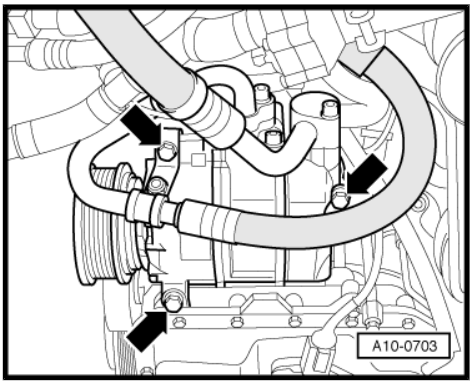

– Unclip wires -2- and -3- in left wheel housing.
– Unscrew holder -1- of vehicle level sender.

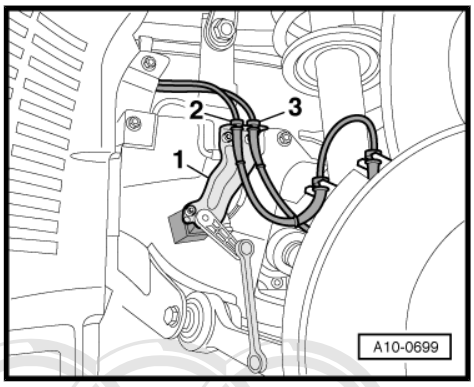

– Remove noise insulation on left and right over drive shafts -arrows-.

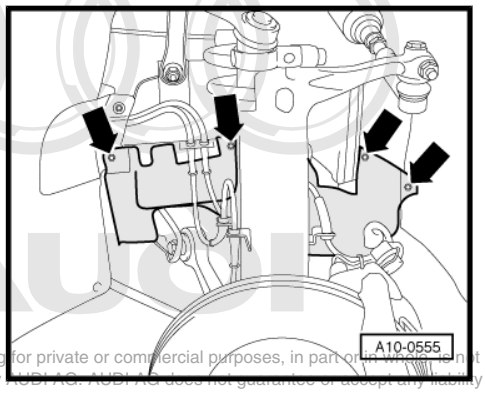

Protected by copyright. Copying for private or commercial purposes, in part or in whole, is not permitted unless authorised by AUDI AG. AUDI AG does not guarantee or accept any liability with respect to the correctness of information in this document. Copyright by AUDI AG.

– Sever cable tie -4- at longitudinal member on right.
– Unclip and unplug connectors -3- and -5-.
– Unclip cover of junction box.
– Unscrew wire -2- in junction box and at clip -6-.
– Unscrew earth strap -1-.
– Lay bare wires.

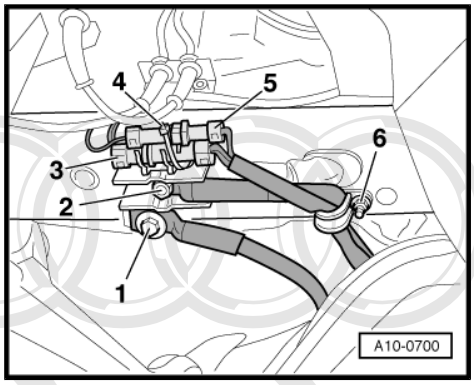

– Unscrew heat shield over drive shaft from gearbox on left and right -arrows-.
– Unscrew drive shaft on left and right from gearbox flange shafts.

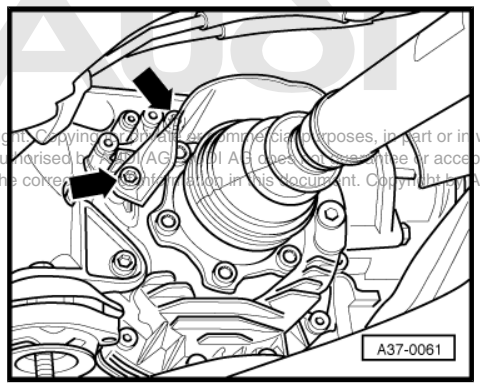

Protected by copyright. Copying for private or commercial purposes, in part or in whole, is not permitted unless authorised by AUDI AG. AUDI AG does not guarantee or accept any liability with respect to the correctness of information in this document. Copyright by AUDI AG.

– Unscrew collared nut -arrow- of joint pin at guide link on left and right until it is flush with end of thread.

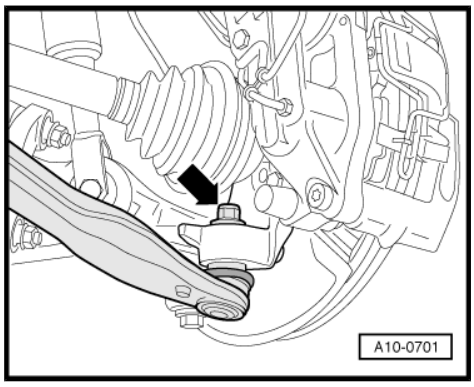

– Use puller -T40010- to press joint pin of guide link off tapered seat on left and right.
– Use a 4 mm Allen key to provide support for joint pin.
– Unscrew nut and take joint pin out of guide link.

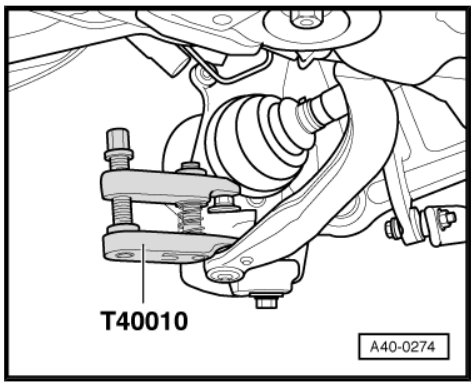

– Unscrew collared nut -1- from anti-roll bar connecting link on left and right.
– Unscrew track control link from subframe -2- on left and right.
– Swivel wheel bearing housing outwards on left and right and in doing so guide ends of drive shaft under subframe.
– Lift ends of drive shaft clear to side and tie in place at sub-frame.

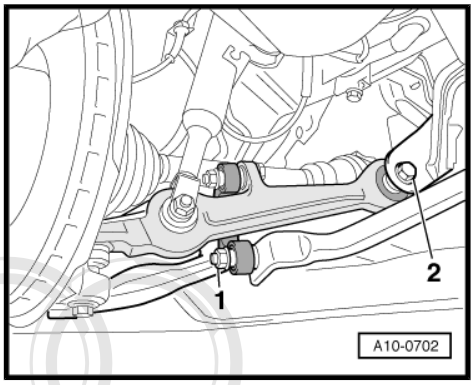

– Screw out bolt -arrow- at front exhaust pipe link plate on left and right.
– Swivel front exhaust pipe link plate to front.

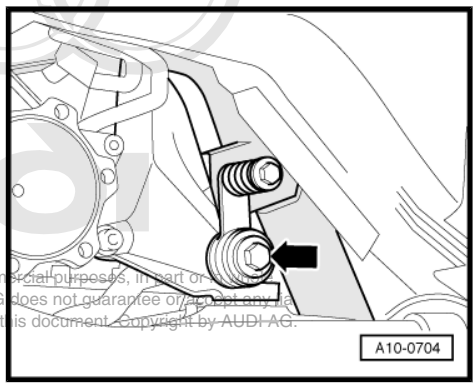

Protected by copyright. Copying for private or commercial purposes, in part or in whole, is not permitted unless authorised by AUDI AG. AUDI AG does not guarantee or accept any liability with respect to the correctness of information in this document. Copyright by AUDI AG.

– Unfasten screw connections -arrows- at front exhaust pipe/ catalytic converter on left.

Note

To avoid damage, decoupling element in front exhaust pipe is not to be kinked by more than 10°.

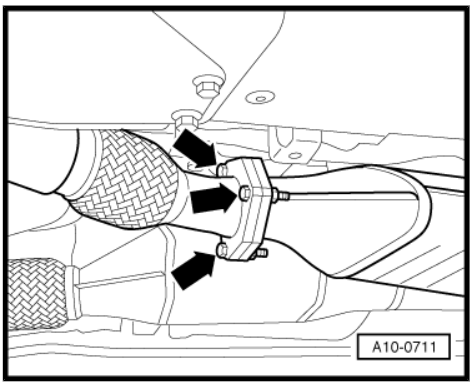

– Unfasten screw connections -1- of front left clamp.
– Detach catalytic converter on left.
– Unfasten screw connections -2- of front right clamp.
– Lift catalytic converter clear on right and tie in place at gearbox.

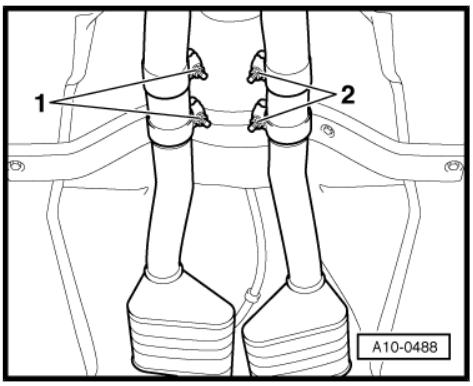

– Unscrew heat shield -A- for propshaft -arrows-.
– Screw out bolts at gearbox/propshaft flange.
– Retract propshaft to rear final drive. The constant velocity joints can be axially adjusted.
– Press propshaft upwards and support with wooden block against floor cross member.

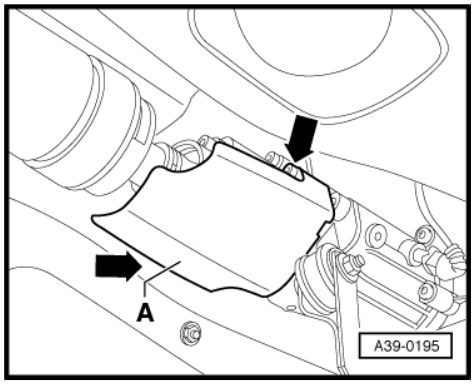

– Unscrew heat shield for selector lever cable on left at gearbox -arrows-.

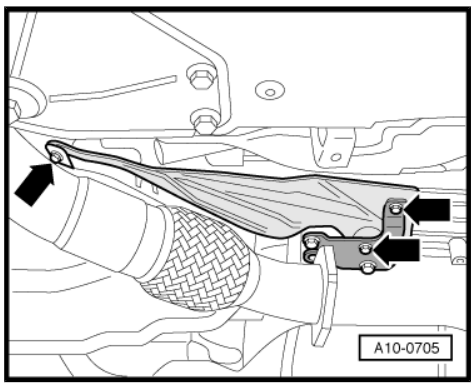

Note

Take care not to bend or kink selector lever cable.

– Shift selector lever to position “P”.
– Lift lugs -A- slightly, turn sleeve -B- through roughly 45° and release fastener.
– Detach sleeve -B- at selector lever cable to rear.
– Unclip ball end from ball socket.

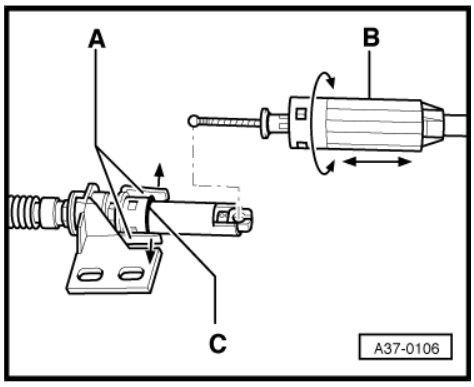

– Unscrew holder for noise insulation -arrows-.

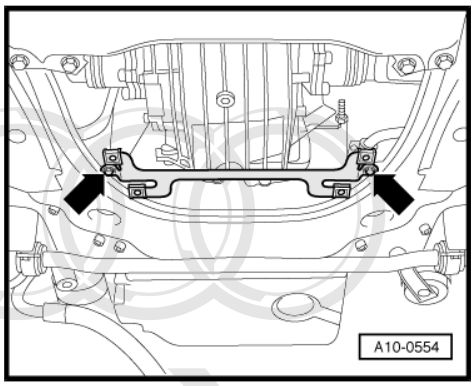

Protected by copyright. Copying for private or commercial purposes, in part or in whole, is not permitted unless authorised by AUDI AG. AUDI AG does not guarantee or accept any liability with respect to the correctness of information in this document. Copyright by AUDI AG.

– Unscrew holder -1- for rear noise insulation and cross-piece -2-.

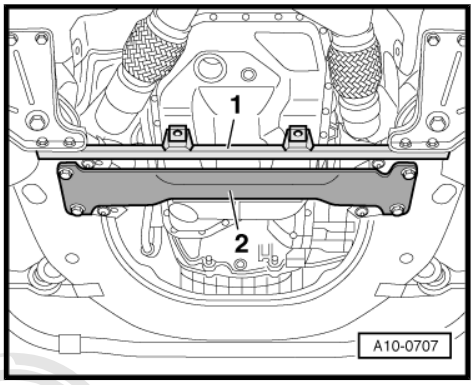

– Unscrew bolts and nuts -1 ... 6- for gearbox mountings on left and right.
– Detach washer at upper attachment point.
– Raise rear of gearbox with engine and gearbox lifter -V.A.G 1383 A- and take out gearbox mountings.
– Lower gearbox again.

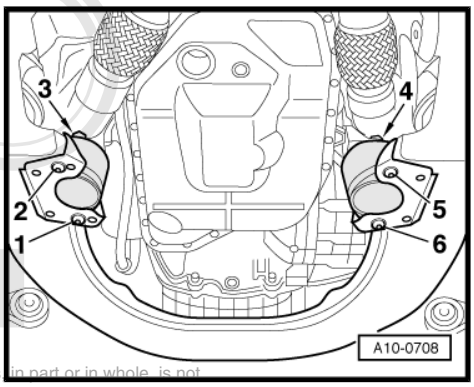

Protected by copyright. Copying for private or commercial purposes, in part or in whole, is not permitted unless authorised by AUDI AG. AUDI AG does not guarantee or accept any liability with respect to the correctness of information in this document. Copyright by AUDI AG.

– Screw out bottom bolts -arrows- at engine mountings.

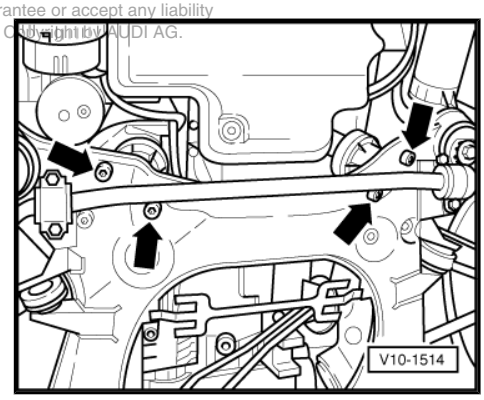

– Attach shackle -10-222 A/12- to both rear engine lifting eyes.
– Engage lifting tackle -3033- at shackles -10-222 A/12- and workshop crane -VAS 6100- or -V.A.G 1202 A- as shown.

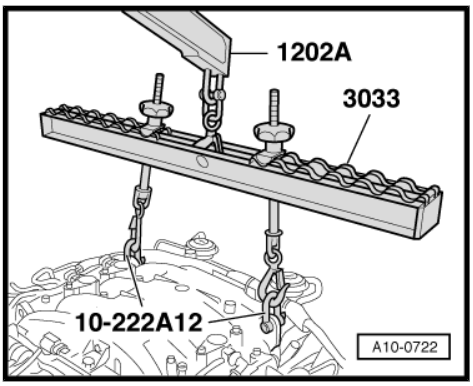

Note

Check whether all hose and pipe/wiring connections between engine, gearbox and body have been unfastened.

– Screw out the 3 bolts -arrows- at the front right torque reaction support.

– Carefully raise engine.

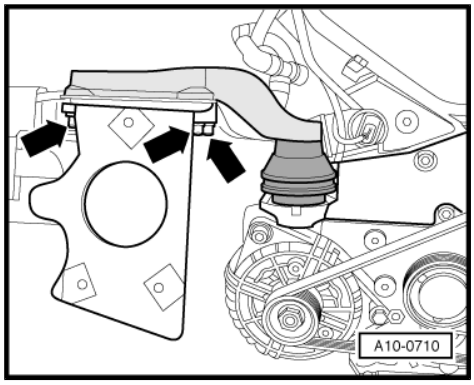

Note

When raising engine, take care not to damage mechanical exhaust gas recirculation valves at bulkhead.

– Whilst raising further, lift engine and gearbox to front out of engine compartment.

1.3 Separating engine and gearbox

- Engine removed

– Position engine/gearbox unit on a workbench or repair trolley, placing wooden blocks under engine and gearbox to secure.

WARNING

- *To avoid possible injury, the engine/gearbox unit must be absolutely stable.*
- *Before commencing further work, re-position lifting tackle -3033- at engine as described below, as the centre of gravity of the engine changes after disconnecting the gearbox.*

– Detach shackle -10-222 A/12- at rear right engine lifting eye.

– Engage shackle -10-222 A/12- at front right engine lifting eye.

– Engage lifting tackle -3033- at shackles -10-222 A/12- and workshop crane -VAS 6100- or -V.A.G 1202 A- as shown.

– Slightly pre-tension lifting tackle with workshop crane.

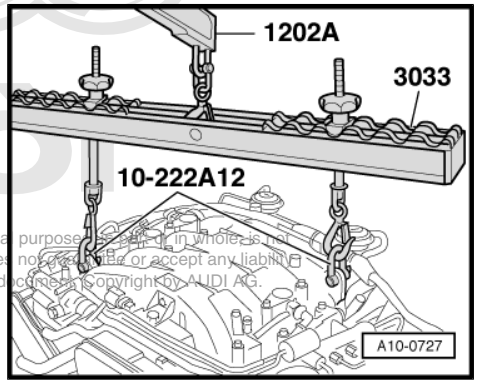

Protected by copyright. Copying for private or commercial purposes, in part or in whole, is not permitted unless authorised by AUDI AG. AUDI AG does not guarantee or accept any liability with respect to the correctness of information in this document. Copyright by AUDI AG.

– Unscrew front exhaust pipe from turbocharger on left -nuts 1 … 3-.

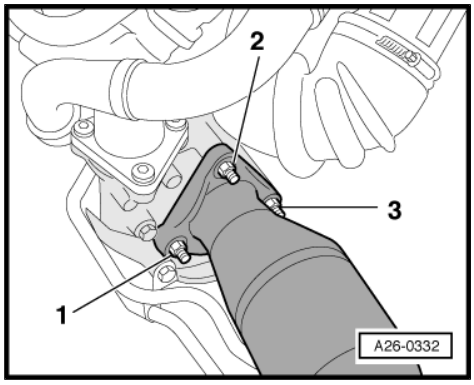

– Unscrew front exhaust pipe from turbocharger on right -nuts 1 … 3-.

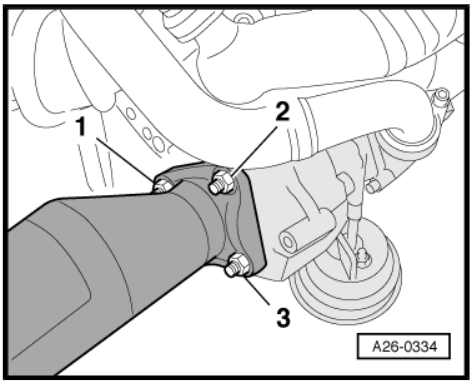

– Remove air pipes with connecting hoses -arrows-.
– Unplug grey connector at rear left of engine.

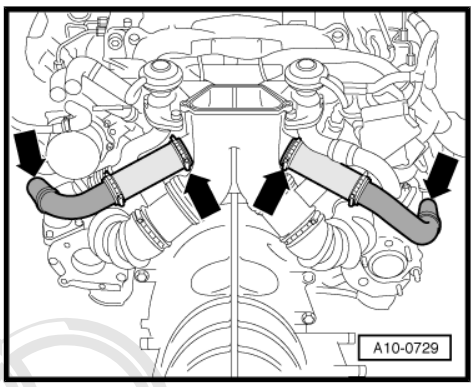

– Screw out bolts -arrows-.
– Pull up holder -1- slightly.

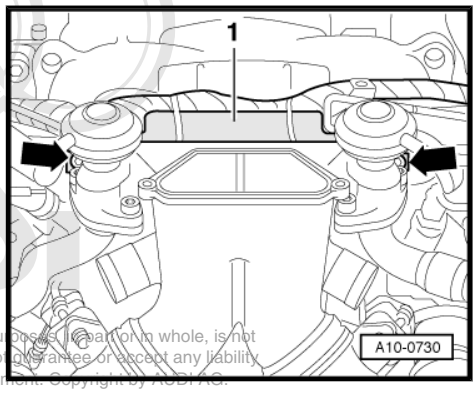

Protected by copyright. Copying for private or commercial purposes, in part or in whole, is not permitted unless authorised by AUDI AG. AUDI AG does not guarantee or accept any liability with respect to the correctness of information in this document. Copyright by AUDI AG.

– Unplug connectors -1- and -3-.
– Unfasten hose clamps -arrows-.
– Lift off rear air pipe -2-.

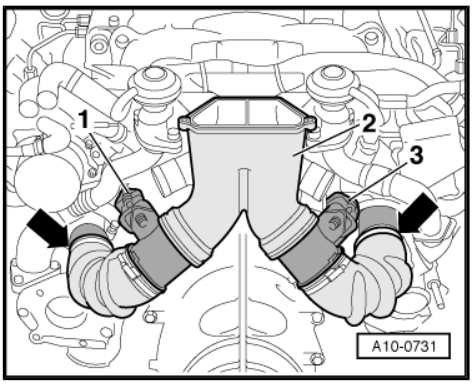

– Screw out bolts -1 … 4- of turbocharger holder on left and right.

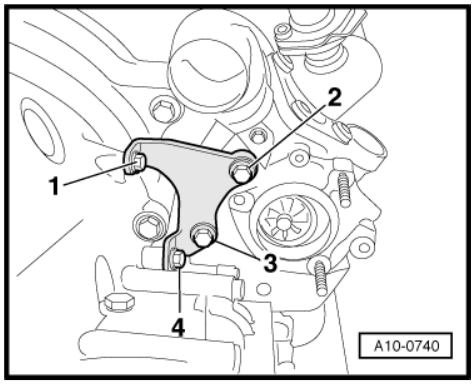

Note

Heed rules for cleanliness when working on automatic gearbox ⇒ Automatic gearbox 01L, four-wheel drive; Rep. Gr. 37 .

– Screw out bolts -arrows- and detach ATF pipes from gearbox.

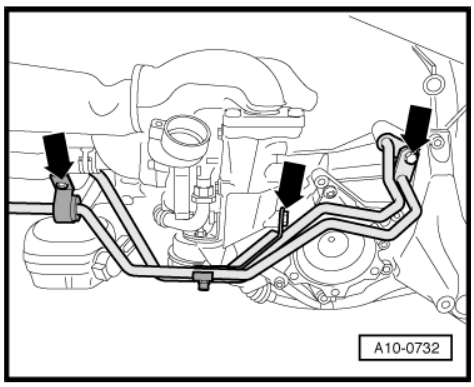

– Remove left gearbox support -arrows-.

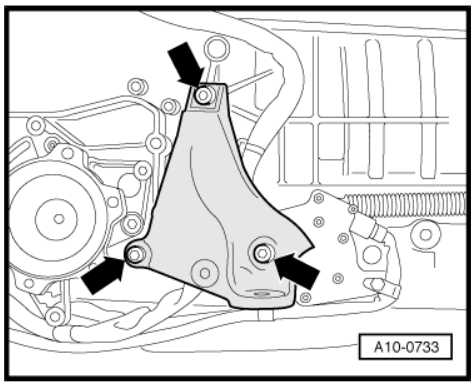

– Unplug connectors -1 ... 4-.
– Lay bare wires.

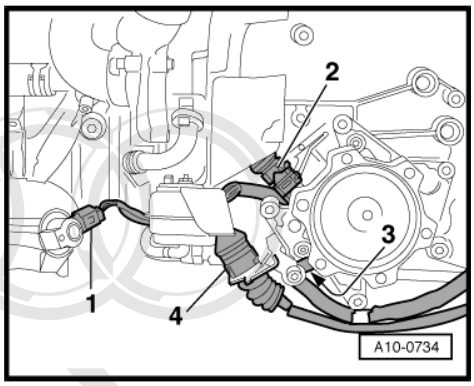

Protected by copyright. Copying for private or commercial purposes, in part or in whole, is not permitted unless authorised by AUDI AG. AUDI AG does not guarantee or accept any liability with respect to the correctness of information in this document. Copyright by AUDI AG.

– Unplug connector -arrow- at gearbox output speed sender -G195- .
– Lay bare wire.

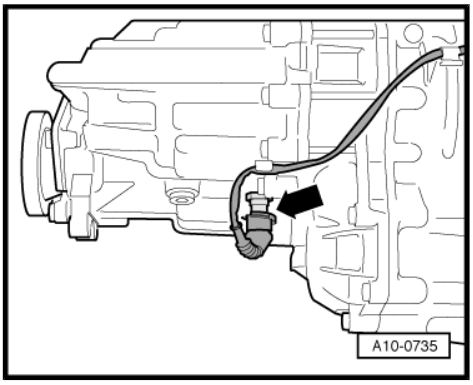

– Unplug connector -2- at right engine mounting.
– Unfasten cable tie -1- from trim.
– Unscrew clamp -3-.
– Remove right engine support -arrows-.

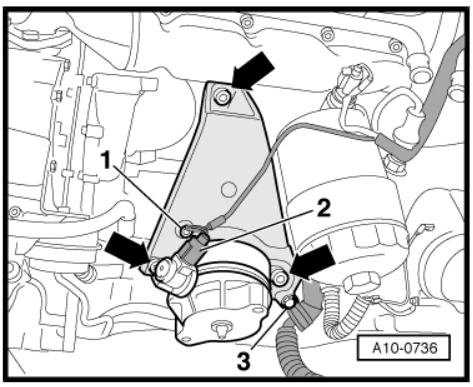

– Screw out bolts -arrows-.
– Screw out upper starter bolt from gearbox side.
– Detach starter.
– Detach wires -1- and -2- at starter.

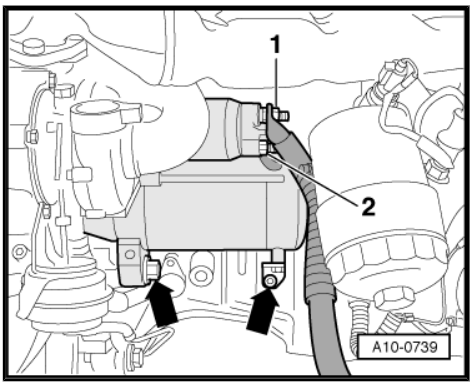

Protected by copyright. Copying for private or commercial purposes, in part or in whole, is not permitted unless authorised by AUDI AG. AUDI AG does not guarantee or accept any liability with respect to the correctness of information in this document. Copyright by AUDI AG.

– Screw out the 6 bolts -arrows- of the torque converter in the opening of the removed starter (to do so, give crankshaft a further $^{1}/_{3}$ turn in each case).

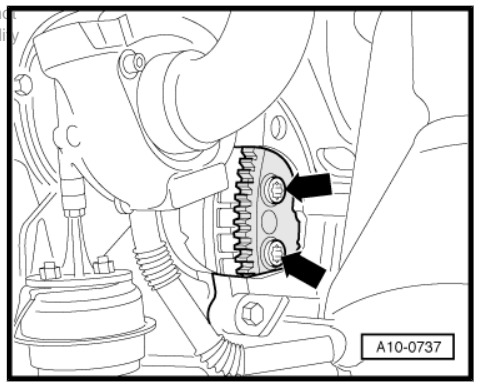

Note

Provide support at central bolt of crankshaft when slackening off torque converter bolts.

– Screw out bolts -arrows- of oil return pipe for turbocharger on left.
– Screw out engine/gearbox bolts accessible from underneath and then bolts accessible from above.
– Press torque converter off drive plate through opening on left and at the same time detach engine from gearbox.
– Secure torque converter in position in gearbox to stop it falling out.

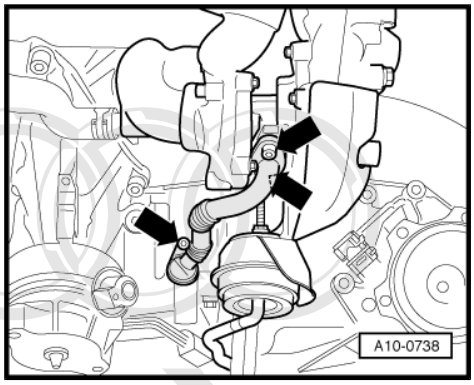

1.4 Attaching engine to repair stand

Special tools and workshop equipment required

♦ Engine and gearbox holder -VW 540-

Protected by copyright. Copying for private or commercial purposes, in part or in whole, is not permitted unless authorised by AUDI AG. AUDI AG does not guarantee or accept any liability with respect to the correctness of information in this document. Copyright by AUDI AG.

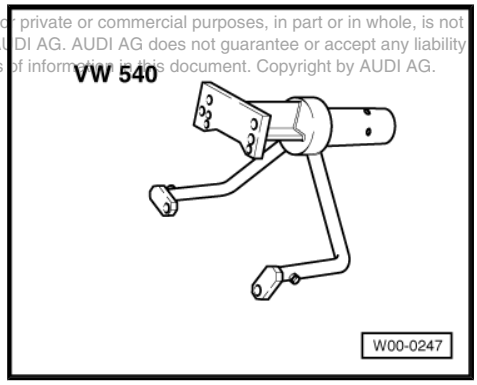

♦ Supplementary set for engine and gearbox holder -VW 540/1 B-

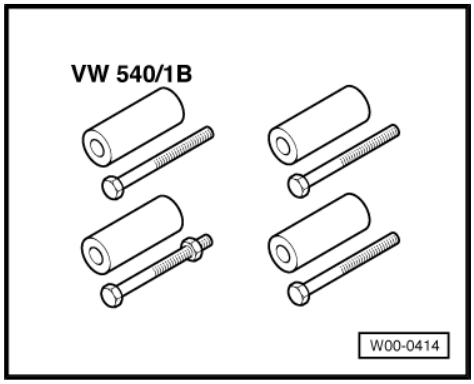

♦ Bolt M12x130

Sequence of operations

• Engine separated from gearbox ⇒ page 22
– Remove drive plate ⇒ page 70 .
– Remove heat shield for turbocharger on left.
– For performing assembly work, attach engine with engine and gearbox holder -VW 540- and supplementary set for engine and gearbox holder -VW 540/1 B- to repair stand.

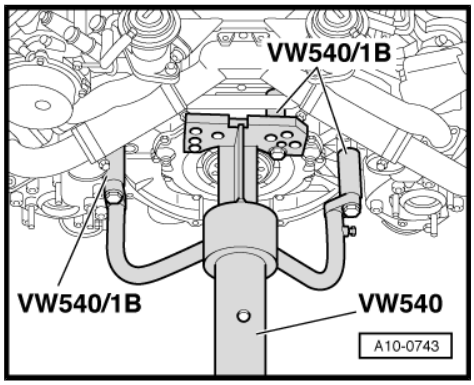

1.5 Installing engine

Install in reverse order; paying attention to the following:

Note

- *Replace self-locking nuts and bolts when performing assembly work.*
- *Replace bolts tightened by turning through a specified angle, as well as sealing rings and seals.*
- *Hose connections and hoses for charge air system must be free of oil and grease before assembly.*
- *Secure all hose connections with standard clamps ⇒ Parts catalogue .*
- *Re-attach all cable ties in the same locations on installation.*

– Check whether dowel sleeves for centring engine/gearbox have been fitted in cylinder block (insert if necessary).

Checking installation dimension of torque converter

If the converter has been correctly inserted, the distance -a- between the contact surfaces at the tapped holes on the converter and the contact surface of the torque converter bell housing is approx. 19 mm for the automatic gearbox 01L.

If the converter has not been fully inserted, the gap is approx. 10 mm.

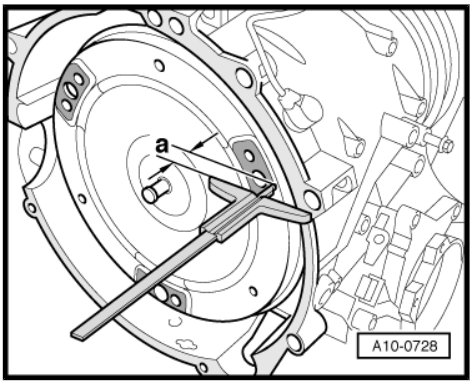

Caution

An incorrectly inserted torque converter will result in destruction of the converter or ATF pump driver on connecting the gearbox to the engine.

Protected by copyright. Copying for private or commercial purposes, in part or in whole, is not permitted unless authorised by AUDI AG. AUDI AG does not guarantee or accept any liability with respect to the correctness of information in this document. Copyright by AUDI AG.

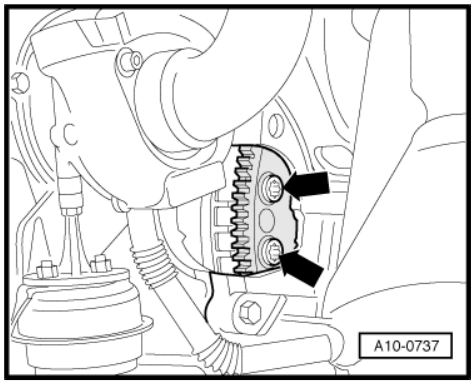

- Before assembling engine and gearbox, turn torque converter and drive plate of engine such that holes or tapped holes are on a level with opening for removed starter -arrows-.
- Use genuine bolts for attaching torque converter to drive plate ⇒ Parts catalogue .
- Screw gearbox to engine.

Caution

Prior to and whilst tightening bolts at engine/gearbox flange, keep checking whether torque converter can be turned behind drive plate. If not, it must be assumed that converter has not been properly inserted and that driver of ATF pump and thus gearbox will be destroyed on finish-tightening the screw connections.

Note

- *Tightening torques only apply to lightly greased, lubricated, phosphate-coated or blackened nuts and bolts.*
- *Additional lubricants such as engine or gear oil are permitted, however not graphite-based lubricants.*
- *Do not use degreased parts.*
- *Tolerance for tightening torques ± 15%*

Engine/gearbox attachment

Item	Bolt	Nm
1, 3, 4, 5, 6	M12x75	65
2	M10x160	65 [1)]
7, 8, 9	M12x50	65
A	Dowel sleeves for centring	

1) Bolt strength 10.9

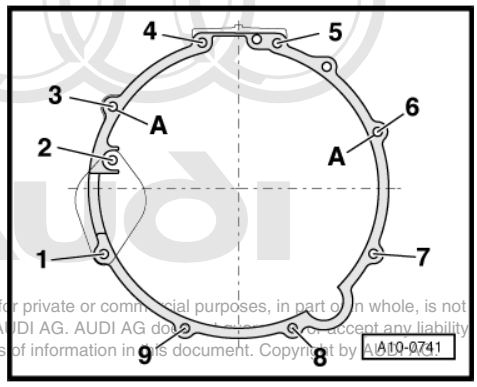

Protected by copyright. Copying for private or commercial purposes, in part or in whole, is not permitted unless authorised by AUDI AG. AUDI AG does not make any representation or accept any liability with respect to the correctness of information in this document. Copyright by AUDI AG

- Attach front exhaust pipes to engine ⇒ page 249
- Attach ATF pipes ⇒ Automatic gearbox 01L, four-wheel drive; Rep. Gr. 37 .
- Prior to assembly, always use a thread cutter to remove remnants of locking compound from tapped holes in flange shaft of gearbox for propshaft.
- Install propshaft ⇒ Automatic gearbox 01L, four-wheel drive; Rep. Gr. 39 .
- Fit selector lever cable. Check setting if necessary ⇒ Automatic gearbox 01L, four-wheel drive; Rep. Gr. 37 .
- Perform stress-free alignment of exhaust system ⇒ page 268 .
- Install guide link, track control link and anti-roll bar connecting link ⇒ Running gear, front-wheel drive and four-wheel drive; Rep. Gr. 40 .
- Screw drive shafts to flange shafts of gearbox ⇒ Running gear, front-wheel drive and four-wheel drive; Rep. Gr. 40 .

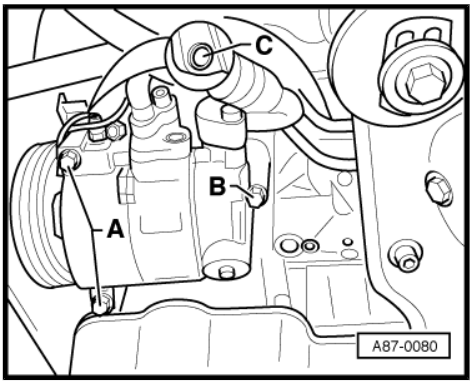

– Check whether dowel sleeves -C- for centring air conditioner compressor have been fitted.
– Install air conditioner compressor ⇒ Air conditioning system; Rep. Gr. 87 .
– Fit poly V-belt ⇒ page 37 .
– Install lock carrier with attachments ⇒ General body repairs, exterior; Rep. Gr. 50 .
– Install front bumper ⇒ General body repairs, exterior; Rep. Gr. 63 .
– Check headlight adjustment ⇒ Electrical system; Rep. Gr. 94 .
– Replace coolant ⇒ page 168 .
– Replenish power steering fluid and bleed steering system ⇒ Running gear, front-wheel drive and four-wheel drive; Rep. Gr. 48 .
– Check ATF level ⇒ Automatic gearbox 01L, four-wheel drive; Rep. Gr. 37 .

Caution

- *Heed colour coding of connectors at engine control units.*
- *The connector colours must be the same as at the control unit plug panels.*

– Electrical connections and routing ⇒ Current flow diagrams, Electrical fault finding and Fitting locations.

Caution

Never use charger to provide starting assistance, as this could damage the vehicle control units.

Note

- *On re-connecting the battery, remember to activate vehicle equipment (radio/radio navigation system, clock, electric window lifters) in line with owner's manual.*
- *Deactivate service mode of telematics control unit ⇒ Radio, telephone, navigation self-diagnosis; Rep. Gr. 01 .*

Protected by copyright. Copying for private or commercial purposes, in part or in whole, is not permitted unless authorised by AUDI AG. AUDI AG does not guarantee or accept any liability with respect to the correctness of information in this document. Copyright by AUDI AG.

– Check oil level ⇒ page 161 .
– As a final step, interrogate and erase engine control unit fault memory, as unplugging the connectors causes faults to be stored ⇒ Vehicle diagnosis, testing and information system VAS 5051.

Tightening torques

Note

- *Tightening torques only apply to lightly greased, lubricated, phosphate-coated or blackened nuts and bolts.*
- *Additional lubricants such as engine or gear oil are permitted, however not graphite-based lubricants.*
- *Do not use degreased parts.*
- *Tolerance for tightening torques ± 15%*

Protected by copyright. Copying for private or commercial purposes, in part or in whole, is not permitted unless authorised by AUDI AG. AUDI AG does not guarantee or accept any liability with respect to the correctness of information in this document. Copyright by AUDI AG.

Component		Nm
Bolts/nuts	M6	10
	M8	20
	M10	45
	M12	65
Exceptions:		
Coolant drain plug (on right of engine)		10
Coolant drain plug to coolant drain pipe (on left of engine)		18
Coolant drain plug to front coolant pipe		10
Drive plate to torque converter		65
Oil return pipe to	Top part of sump	10
	Turbocharger	10
Gearbox support to gearbox		40
ATF pipe to	Gearbox	20
	Holder	10
	Turbocharger	22
Turbocharger holder		22
Holder to mechanical exhaust gas recirculation valve		22
Front exhaust pipe to turbocharger		25
Torque reaction support to longitudinal member		42
Engine mounting to subframe		40
Gearbox mounting to subframe		40
Gearbox support to gearbox mounting		40
Heat shield for drive shaft to gearbox		23
Air conditioner compressor to holder		22
ATF pipe to radiator		5
Steering box hydraulic pressure pipe to hydraulic pump		50
Hydraulic fan hydraulic pressure pipe to hydraulic pump		50
Clamps for coolant hoses		2
Clamps for air hoses		3,5

13 – Crankshaft group

1 Dismantling and assembling engine

1.1 Pulling lock carrier forwards

Various assembly operations do not require complete removal of the lock carrier. It is sufficient – as described below – to pull the lock carrier forwards with wires, pipes and hoses connected.

Special tools and workshop equipment required

- Hose clamps up to Ø 25 mm -3094-

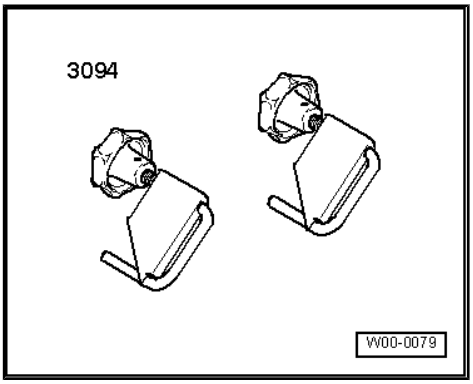

- Front end service position special tool -3369-

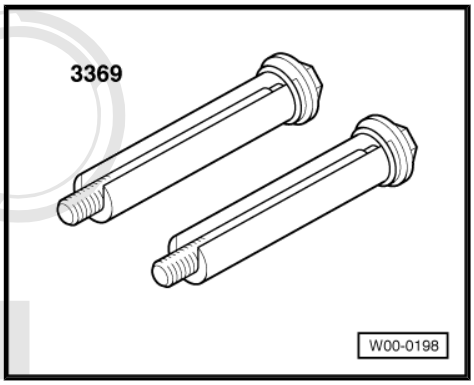

Sequence of operations

Protected by copyright. Copying for private or commercial purposes, in part or in whole, is not permitted unless authorised by AUDI AG. AUDI AG does not guarantee or accept any liability with respect to the correctness of information in this document. Copyright by AUDI AG.

– On vehicles with auxiliary heater, screw out bolts -arrows- for attaching exhaust pipe of auxiliary/supplementary heater to noise insulation.

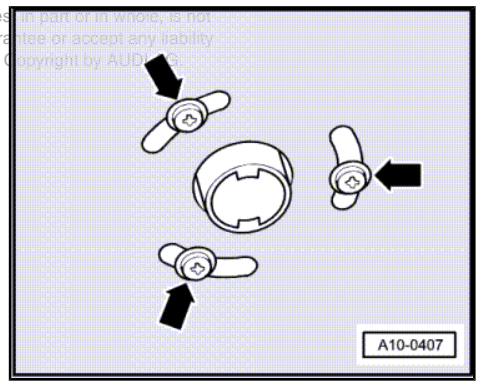

– Unfasten quick-release fasteners -1- and detach front noise insulation.
– Unfasten front area of front wheel housing liner.

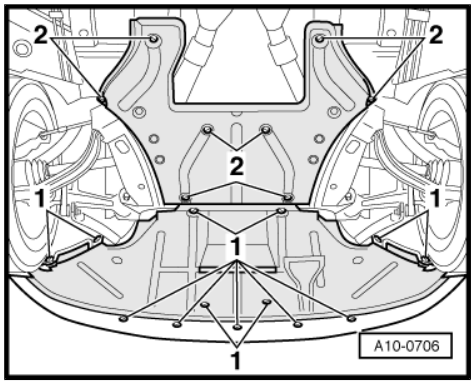

Protected by copyright. Copying for private or commercial purposes, in part or in whole, is not permitted unless authorised by AUDI AG. AUDI AG does not guarantee or accept any liability with respect to the correctness of information in this document. Copyright by AUDI AG.

– Unfasten clips -1- and -2- and detach air duct grille on left and right.

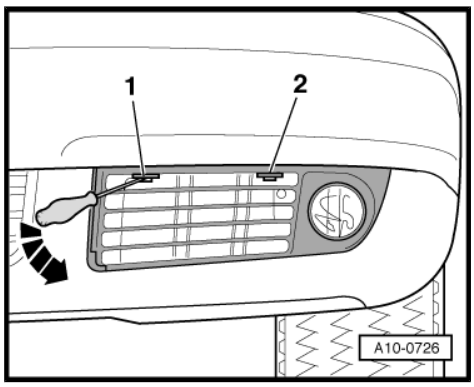

– Screw out bolt in opening -arrow- at bumper on left and right.
– Pull bumper slightly to front and unplug connectors.

Vehicles with headlight washer system:

– Use hose clamp -3094- to pinch off hose to headlight washer system upstream of T-piece.
– Detach hose at T-piece.

All models:

– Detach bumper.

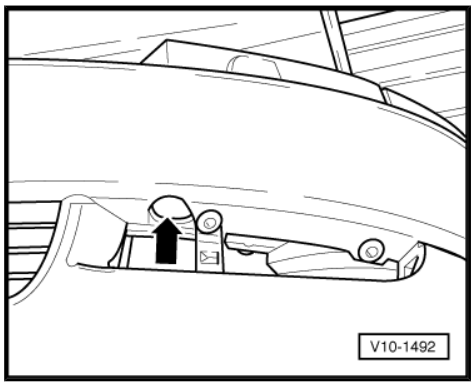

– Unclip cover -2- for air duct at lock carrier.
– Remove air duct -1-.

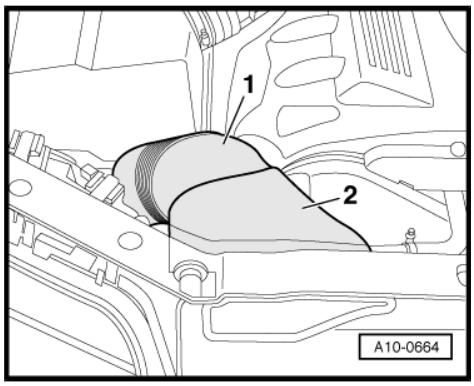

– Unplug connectors -arrows- for headlights and turn signal indicators on left and right (this involves unclipping cover at right headlight).
– Lay bare wires.

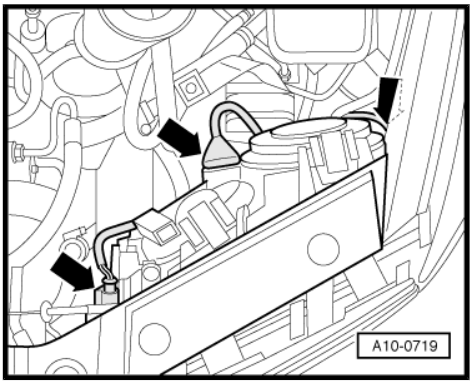

– Unscrew trim -arrow- on left and right and detach to front.
– Remove both headlights.

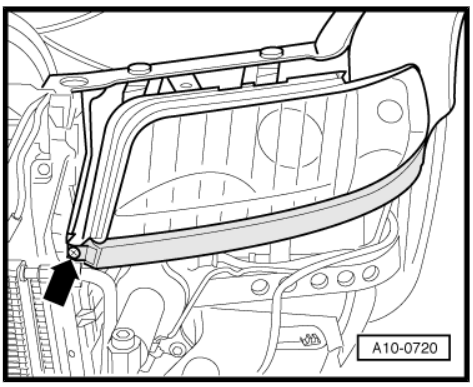

– Unplug connectors -arrows-.

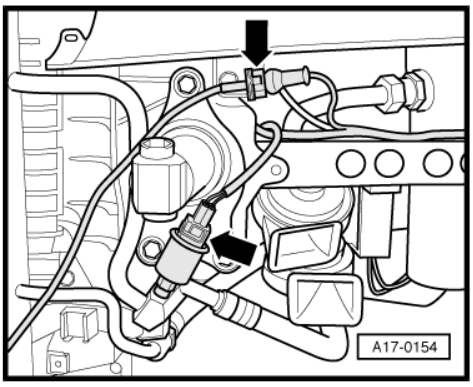

– Unscrew impact absorber on left and right -arrows-.

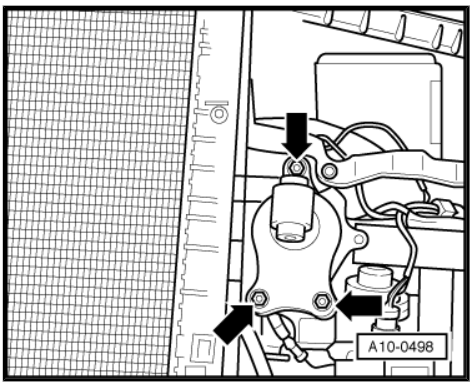

Protected by copyright. Copying for private or commercial purposes, in part or in whole, is not permitted unless authorised by AUDI AG. AUDI AG does not guarantee or accept any liability with respect to the correctness of information in this document. Copyright by AUDI AG.

– Detach bolts from sleeves of front end service position special tool -3369- .
– Screw bolts from -3369- into upper fastening holes for impact absorber.

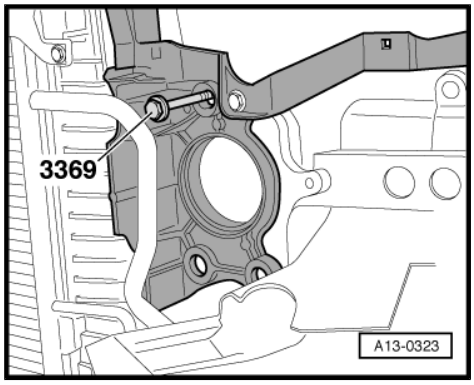

– Detach rubber sealing lip on inside at wing on left and right and screw out bolt -arrow- beneath rubber sealing lip.
– Pull lock carrier carefully forwards.

Install in reverse order; paying attention to the following:

– Install lock carrier with attachments ⇒ General body repairs, exterior; Rep. Gr. 50 .
– Install headlights ⇒ Electrical system; Rep. Gr. 94 .
– Install front bumper ⇒ General body repairs, exterior; Rep. Gr. 63 .
– Check headlight adjustment ⇒ Electrical system; Rep. Gr. 94 .

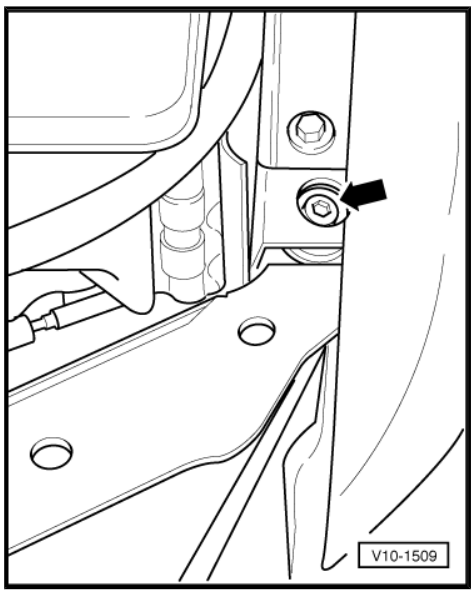

Protected by copyright. Copying for private or commercial purposes, in part or in whole, is not permitted unless authorised by AUDI AG. AUDI AG does not guarantee or accept any liability with respect to the correctness of information in this document. Copyright by AUDI AG.

1.2 Exploded view of poly V-belt drive for hydraulic pump, alternator and air conditioner compressor

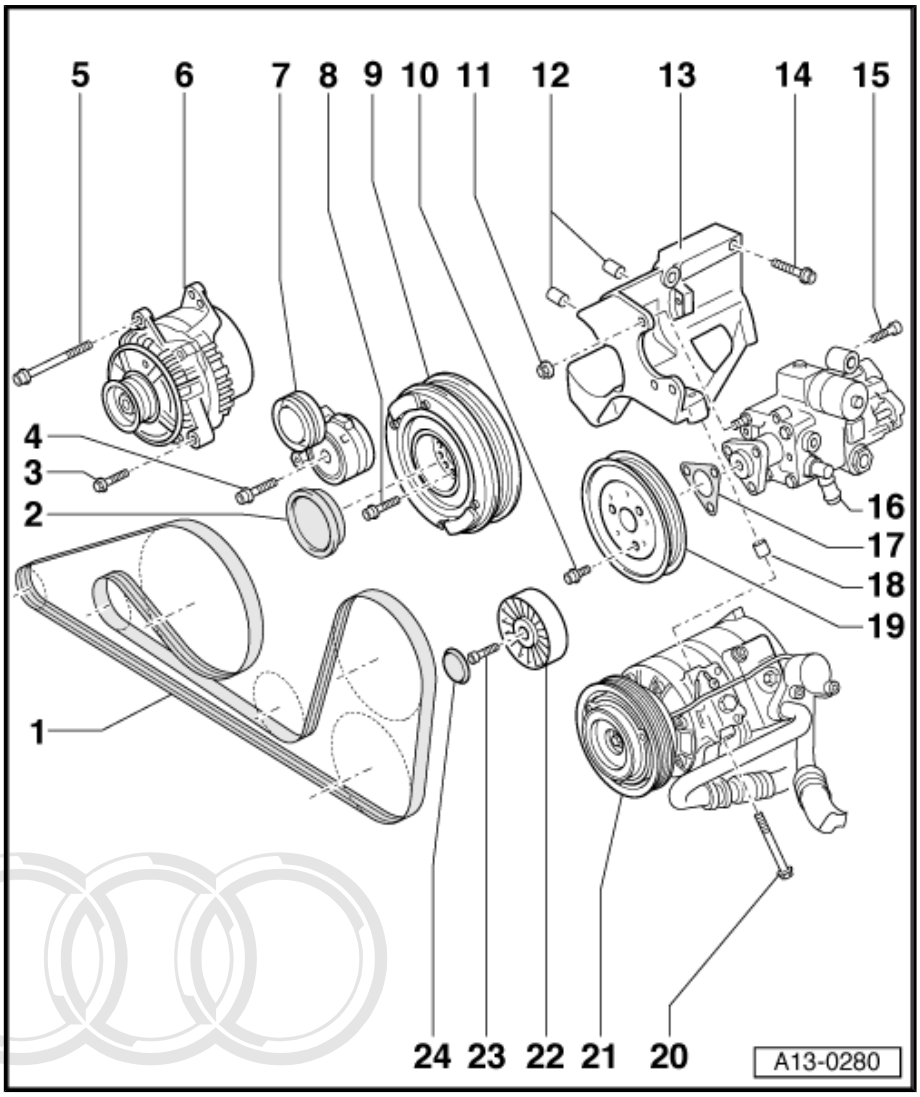

1 - Poly V-belt

- ❑ Prior to removal, mark direction with chalk or a felt-tip pen. Running a used belt in the opposite direction could destroy it.
- ❑ Check for wear
- ❑ Removing and installing ⇒ page 36

2 - Cap

- ❑ Press off with screwdriver

3 - 22 Nm

4 - 45 Nm

5 - 45 Nm

6 - Alternator

- ❑ Removing and installing ⇒ Electrical system; Rep. Gr. 27

7 - Poly V-belt tensioner

- ❑ Swivel with ring spanner to slacken off poly V-belt ⇒ page 36

8 - 22 Nm

9 - Vibration damper

- ❑ With pulley for poly V-belt
- ❑ Removing and installing ⇒ page 39

10 - 22 Nm

11 - 22 Nm

12 - Dowel sleeve

- ❑ 2x
- ❑ Check for proper attachment in holder

Protected by copyright. Copying for private or commercial purposes, in part or in whole, is not permitted unless authorised by AUDI AG. AUDI AG does not guarantee or accept any liability with respect to the correctness of information in this document. Copyright by AUDI AG.

13 - Holder for hydraulic pump and air conditioner compressor

- ❑ Pay attention to dowel sleeves ⇒ Item 12 (page 35) on installation

14 - 40 Nm

15 - 22 Nm

16 - Hydraulic pump

- ❑ For power steering and hydraulic fan
- ❑ Removing and installing ⇒ page 193

17 - Shims

- ❑ Various thicknesses
- ❑ Determine thickness following removal and installation of hydraulic pump or holder for air conditioner compressor and hydraulic pump ⇒ “1.4 Checking alignment of hydraulic pump and air conditioner compressor pulleys”, page 37

18 - Dowel sleeve

- ❑ 2x
- ❑ Check for proper attachment

19 - Pulley

- ❑ For hydraulic pump
- ❑ Removing and installing ⇒ page 36

20 - 22 Nm

21 - Air conditioner compressor

- ❑ After detaching, use a piece of wire for example to attach compressor to longitudinal member. Do not leave hanging from refrigerant pipes.
- ❑ Do not unscrew/disconnect refrigerant pipes
- ❑ Pay attention to dowel sleeves ⇒ Item 18 (page 35) on installation

22 - Idler wheel

- ❑ For poly V-belt

23 - 22 Nm

24 - Cover

- ❑ For idler wheel

Protected by copyright. Copying for private or commercial purposes, in part or in whole, is not permitted unless authorised by AUDI AG. AUDI AG does not guarantee or accept any liability with respect to the correctness of information in this document. Copyright by AUDI AG.

Removing and installing pulley for hydraulic pump

- Poly V-belt removed ⇒ page 36

– When slackening off and tightening bolts -arrows-, provide support with pin wrench -3212- .

- Installation position: Label “front” facing in direction of travel
- Tightening torque 22 Nm

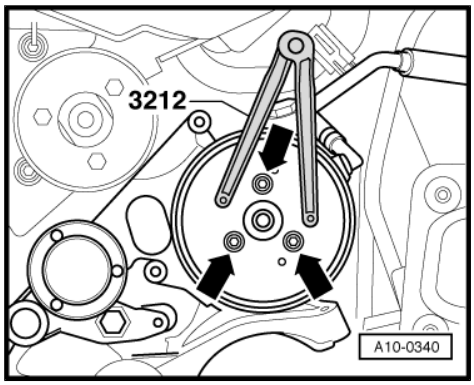

1.3 Removing and installing poly V-belt

Removing

- Engine in position

– Pull lock carrier forwards ⇒ page 31 .

Note

Prior to removal, mark direction of poly V-belt with chalk or a felt-tip pen. Running a used belt in the opposite direction could destroy it.

– Swivel tensioner in -direction of arrow- to slacken off poly V-belt.

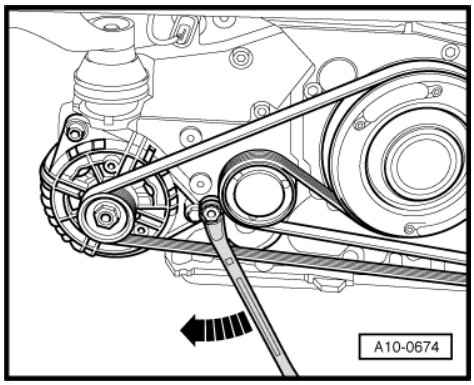

Note

The poly V-belt tensioner can be locked in position by inserting a 5 mm Allen key in the locating holes -arrow-.

– Detach poly V-belt from alternator pulley.

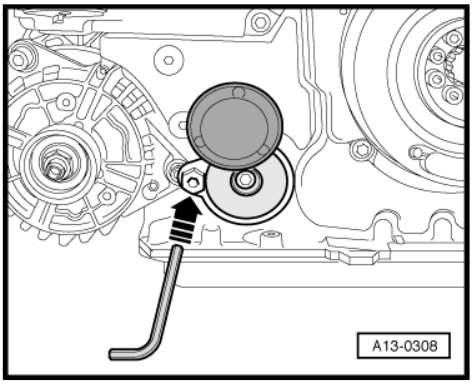

Installing

Install in reverse order; paying attention to the following:

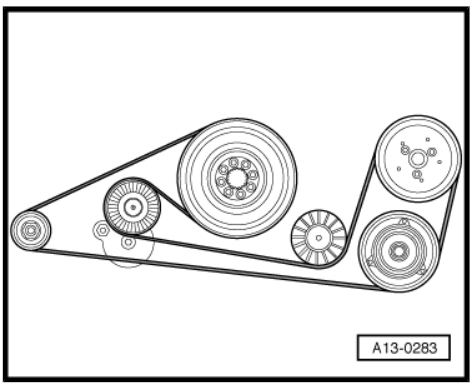

Note

On installation, make sure poly V-belt is correctly positioned on pulleys.

– Position poly V-belt over crankshaft pulley, then over the other pulleys and finally on tensioning roller.
– Start engine and check belt running.
– Install lock carrier with attachments ⇒ General body repairs, exterior; Rep. Gr. 50 .
– Install headlights ⇒ Electrical system; Rep. Gr. 94 .
– Install front bumper ⇒ General body repairs, exterior; Rep. Gr. 63 .
– Check headlight adjustment ⇒ Electrical system; Rep. Gr. 94 .

1.4 Checking alignment of hydraulic pump and air conditioner compressor pulleys

Protected by copyright. Copying for private or commercial purposes, in part or in whole, is not permitted unless authorised by AUDI AG. AUDI AG does not guarantee or accept any liability with respect to the correctness of information in this document. Copyright by AUDI AG.

Note

To avoid damaging the poly V-belt, the alignment of the air conditioner compressor and hydraulic pump pulleys is to be checked.

The pulley alignment must be checked after replacing the components listed below.

- Hydraulic pump
- Holder for hydraulic pump and air conditioner compressor
- Air conditioner compressor

Special tools and workshop equipment required

♦ Alignment gauge -3201-

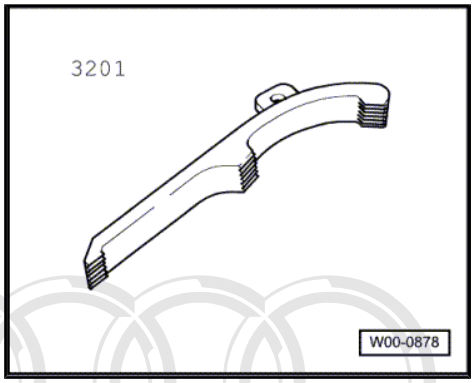

♦ Pin wrench -3212-

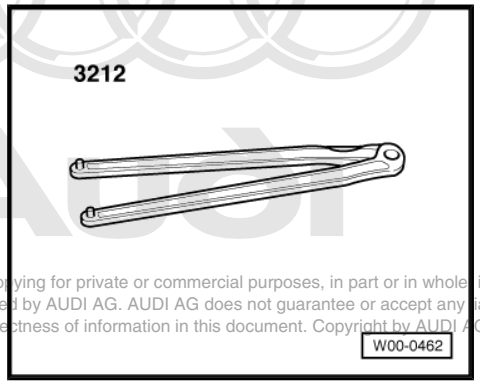

Protected by copyright. Copying for private or commercial purposes, in part or in whole, is not permitted unless authorised by AUDI AG. AUDI AG does not guarantee or accept any liability with respect to the correctness of information in this document. Copyright by AUDI AG.

Test sequence

- Poly V-belt removed ⇒ page 36

– Position alignment gauge -3201- on poly V-belt pulley of air conditioner compressor.

- Poly V-belt pulley of hydraulic pump must be aligned with that of air conditioner compressor.

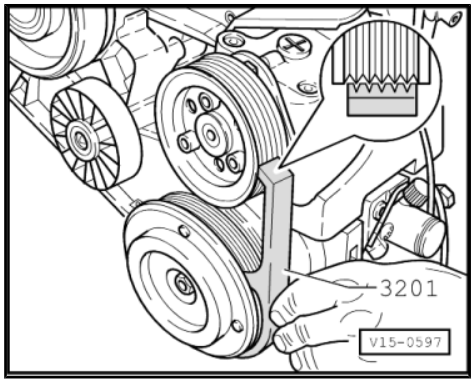

If the two poly V-belt pulleys are not aligned:

– Screw out bolts -arrows- of poly V-belt pulley for hydraulic pump.

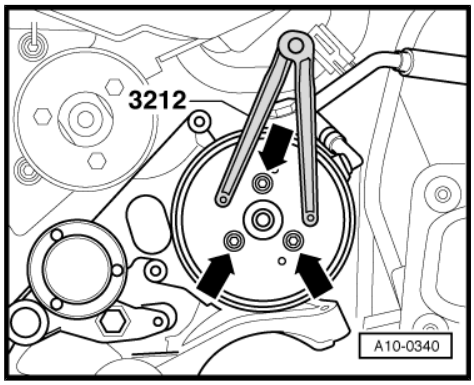

Note

♦ *When slackening off and tightening bolts, provide support with pin wrench -3212- .*

♦ *Installation position: Label “front” at poly V-belt pulley facing in direction of travel*

– Use shims of 0.5, 1.0 and 1.5 mm thickness to even out distance between poly V-belt pulleys for hydraulic pump and air conditioner compressor. Part no. ⇒ Parts catalogue .

– Then check alignment of poly V-belt pulleys using alignment gauge -3201- . Repeat adjustment if necessary.

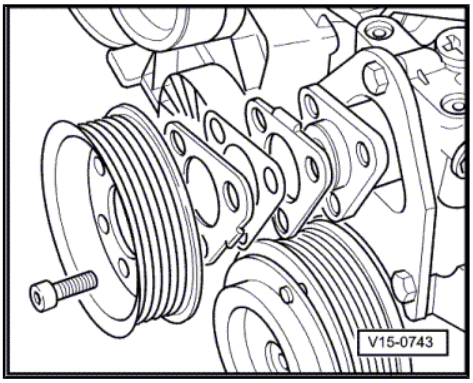

Tightening torque

Component	Nm
Pulley to hydraulic pump	22

1.5 Removing and installing vibration damper

- Poly V-belt removed ⇒ page 36

Removing

– Prise off cap.

– Screw out 8 bolts -1- and remove crankshaft vibration damper.

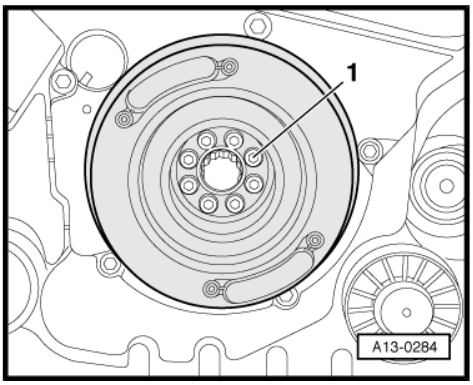

Installing

Install in reverse order; paying attention to the following:

– On installation, make sure notch -arrow- in vibration damper is aligned with locking lug on toothed belt sprocket.

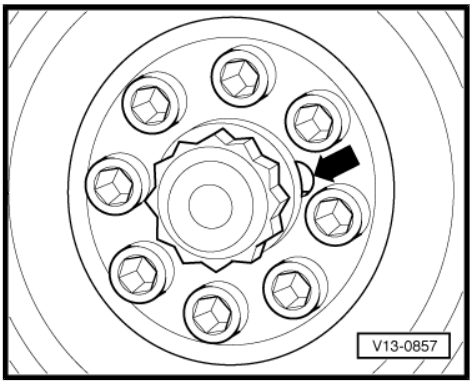

Tightening torque

Component	Nm
Vibration damper to crankshaft	22

Protected by copyright. Copying for private or commercial purposes, in part or in whole, is not permitted unless authorised by AUDI AG. AUDI AG does not guarantee or accept any liability with respect to the correctness of information in this document. Copyright by AUDI AG.

1.6 Exploded view of toothed belt guards

1 - Cap
- ❑ Press off with screwdriver

2 - 22 Nm

3 - Vibration damper
- ❑ With pulley for poly V-belt
- ❑ Removing and installing ⇒ page 39

4 - Cap
- ❑ For lower toothed belt guard

5 - 10 Nm

6 - Rubber grommet

7 - Cover

8 - Sleeve
- ❑ Installation position: Collar facing forwards

9 - Front right toothed belt guard

10 - Front left toothed belt guard

11 - Lower toothed belt guard
- ❑ To remove, unscrew vibration damper

12 - 10 Nm

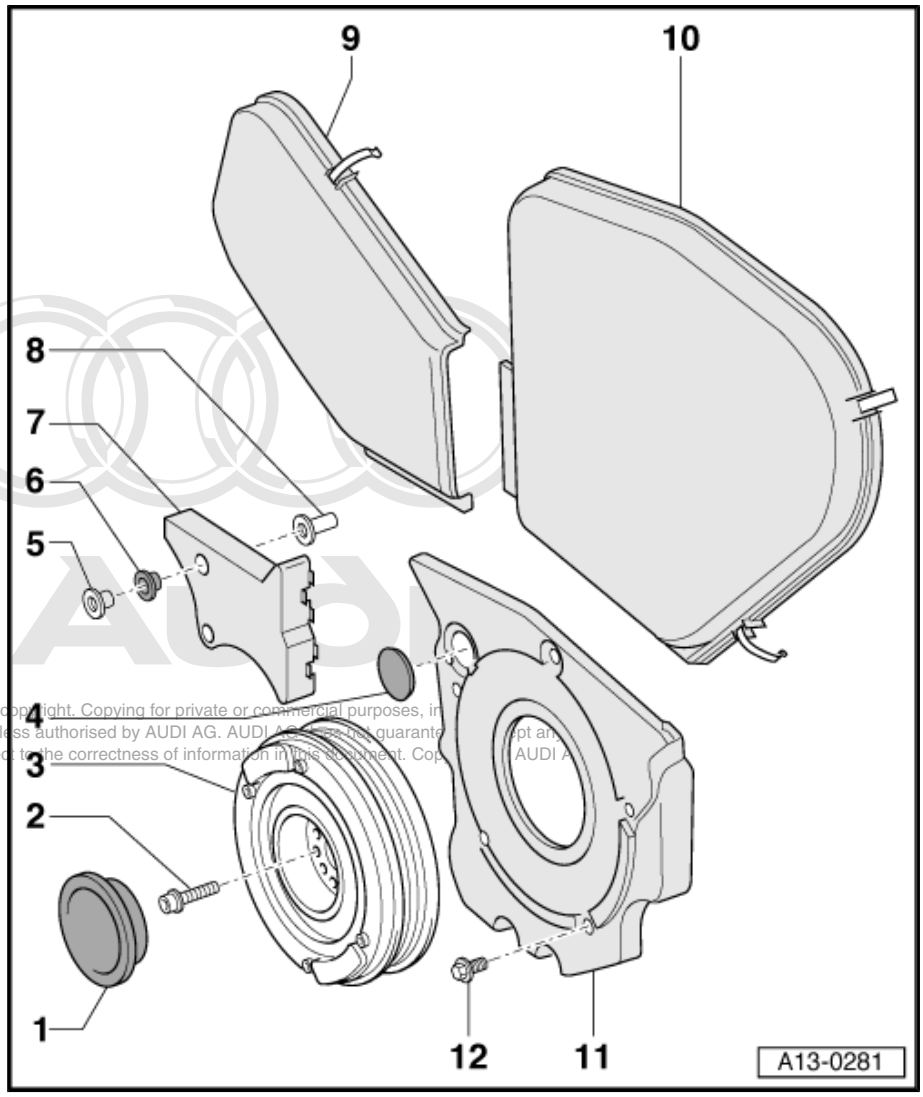

Protected by copyright. Copying for private or commercial purposes, in part or in whole, is not permitted unless authorised by AUDI AG. AUDI AG does not guarantee or accept any liability with respect to the correctness of information in this document. Copyright by AUDI AG.

1.7 Exploded view of toothed belt drive for camshafts

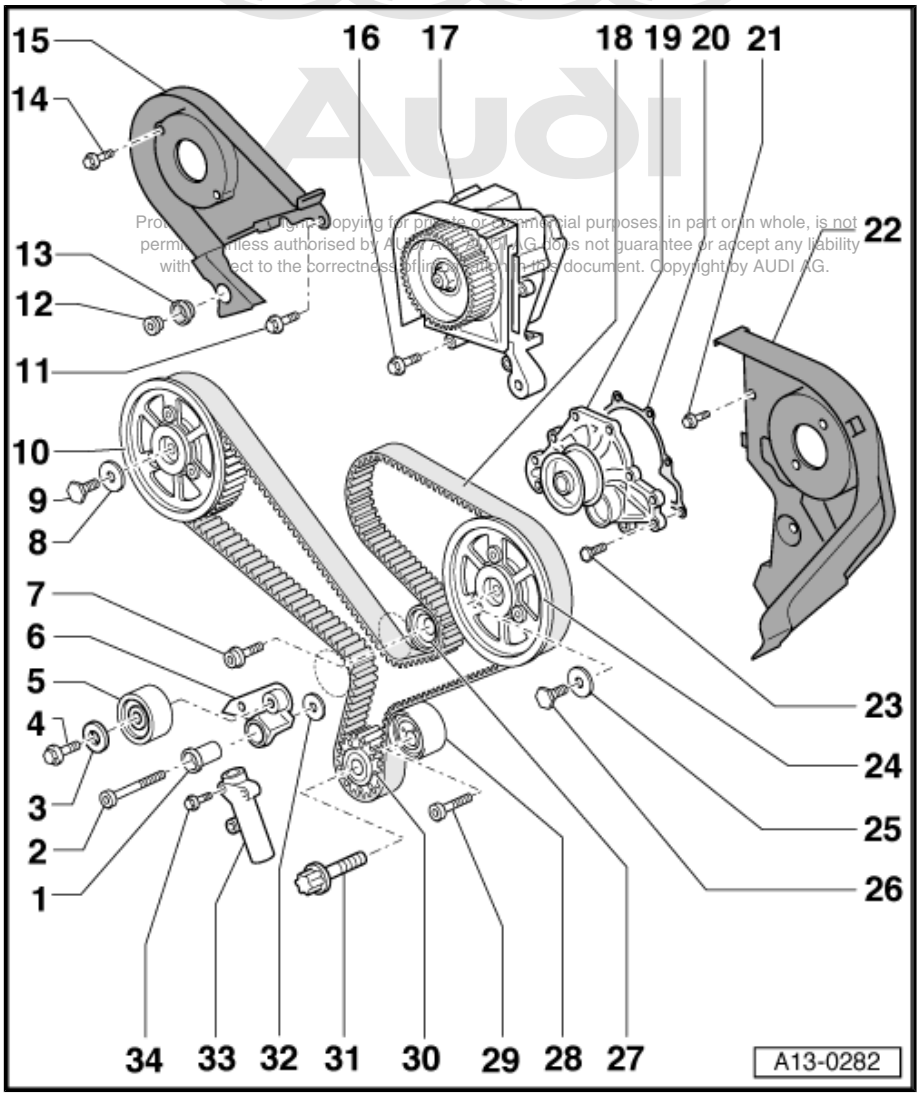

Pro... copying for private or commercial purposes, in part or in whole, is not permitted unless authorised by Audi AG. Audi AG does not guarantee or accept any liability with respect to the correctness of information in this document. Copyright by AUDI AG.

1 - Pivot pin

2 - 45 Nm

3 - Washer
- ❑ For tensioning roller

4 - 45 Nm

5 - Tensioning roller

6 - Tensioning lever
- ❑ Fit washer
  ⇒ Item 32 (page 42)

7 - 70 Nm

8 - Washer

9 - 75 Nm

10 - Camshaft sprocket
- ❑ For inlet camshaft
- ❑ For removal and installation, detach toothed belt from camshaft sprockets ⇒ page 58
- ❑ Detach using two-arm puller -T40001- and claw -T40001/5-

11 - 22 Nm

12 - 10 Nm

13 - Rubber grommet

14 - 10 Nm

15 - Rear right toothed belt guard

16 - 22 Nm

17 - High-pressure pump
- ❑ For injection system

> ⚠ **Caution**
>
> *The high-pressure pump must be filled with fuel before starting the engine for the first time. Dry running of the high-pressure pump must be avoided.*

- ❑ Removing and installing ⇒ Rep. Gr. 23

18 - Toothed belt
- ❑ Prior to removal, mark direction with chalk or a felt-tip pen. Running a used belt in the opposite direction could destroy it.
- ❑ Check for wear
- ❑ Removing ⇒ page 51
- ❑ Installing (adjusting timing) ⇒ page 54

19 - Mechanical coolant pump

- ❑ Removing and installing ⇒ page 173

20 - Gasket

- ❑ Replace

21 - 10 Nm

22 - Rear left toothed belt guard

23 - 10 Nm

24 - Camshaft sprocket

Protected by copyright. Copying for private or commercial purposes, in part or in whole, is not permitted unless authorised by AUDI AG. AUDI AG does not guarantee or accept any liability with respect to the correctness of information in this document. Copyright by AUDI AG.

- ❑ For inlet camshaft
- ❑ For removal and installation, detach toothed belt from camshaft sprockets ⇒ page 58
- ❑ Detach using two-arm puller -T40001- and claw -T40001/5-

25 - Washer

26 - 75 Nm

27 - Idler wheel

28 - Eccentric roller

29 - 45 Nm

30 - Crankshaft toothed belt sprocket

- ❑ There must not be any oil at contact surface between toothed belt sprocket and crankshaft
- ❑ Fitting is only possible in one position

31 - 200 Nm + further 180° ($^1/_2$) turn

- ❑ Replace
- ❑ Do not lubricate
- ❑ Use locking bolt -3242- for slackening off and tightening
- ❑ Screwing in locking bolt -3242- ⇒ page 45 or ⇒ page 50

32 - Washer

- ❑ For tensioning lever

33 - Toothed belt tensioner

34 - 10 Nm

1.8 Turning engine to TDC - engine in position

Special tools and workshop equipment required

- Locking bolt -3242-
- Camshaft retainers -3458-
- Drip tray for workshop cranes -VAS 6208- or -V.A.G 1306-

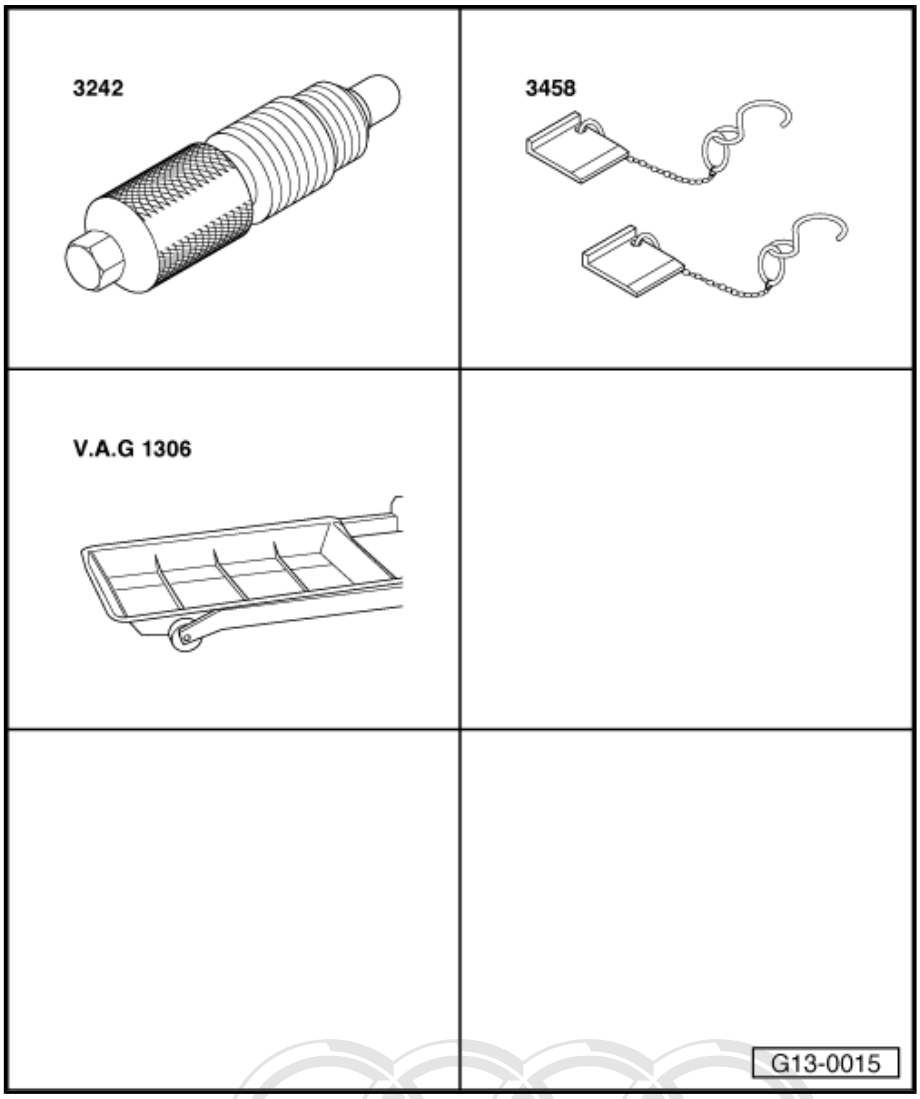

Sequence of operations

– Pull lock carrier forwards ⇒ page 31 .

– Detach engine cover -arrows-.

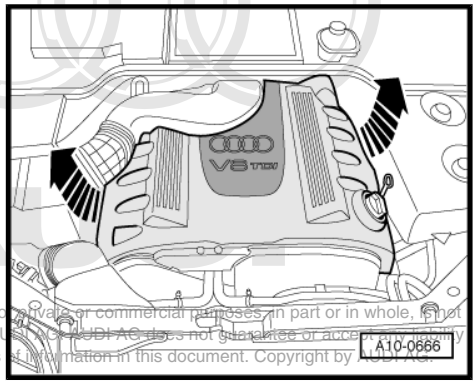

> ⚠ **WARNING**
>
> *Hot vapour/coolant may escape when opening the expansion tank. Cover the cap with a cloth and open carefully.*

– Open cap of coolant expansion tank.

Protected by copyright. Copying for private or commercial purposes, in part or in whole, is not permitted unless authorised by AUDI AG. AUDI AG does not guarantee or accept any liability with respect to the correctness of information in this document. Copyright by AUDI AG.

– Unscrew oil filler neck.

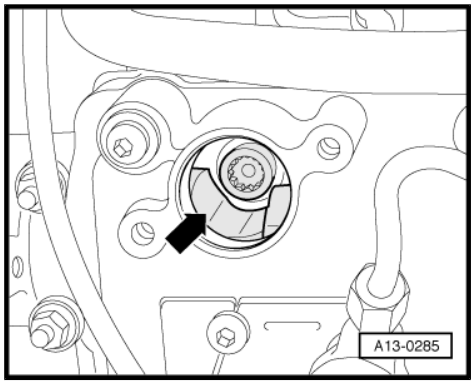

Caution

The engine is only to be turned at the crankshaft in the direction of engine rotation (clockwise).

– Crank engine until recess -arrow- at camshaft is positioned such that bolt is visible.

Note

Crank engine at crankshaft central bolt.

– Unfasten quick-release fasteners -2- and detach rear noise insulation.

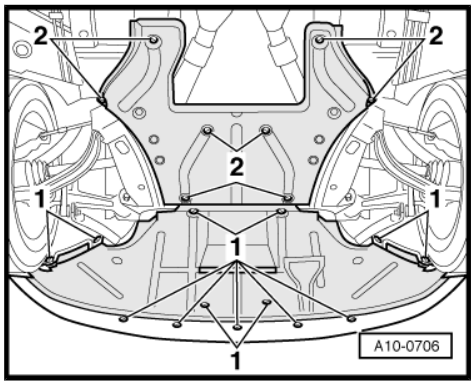

– Place drip tray for workshop cranes -VAS 6208- or -V.A.G 1306- beneath engine.

– Open drain plugs -2- and -3- and drain off coolant at engine only.

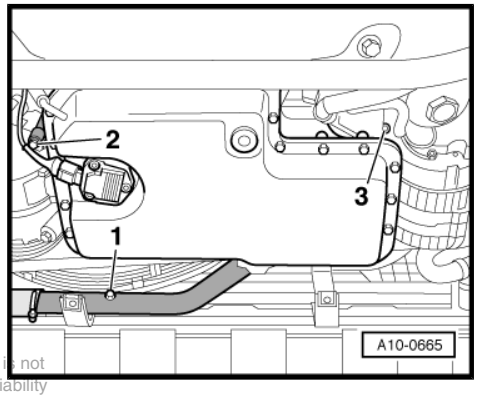

Protected by copyright. Copying for private or commercial purposes, in part or in whole, is not permitted unless authorised by AUDI AG. AUDI AG does not guarantee or accept any liability with respect to the correctness of information in this document. Copyright by AUDI AG.

– Unscrew holder for noise insulation -arrows-.

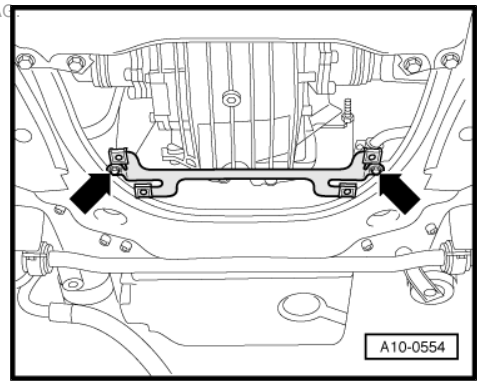

– Screw out TDC mark screw plug at top part of sump.

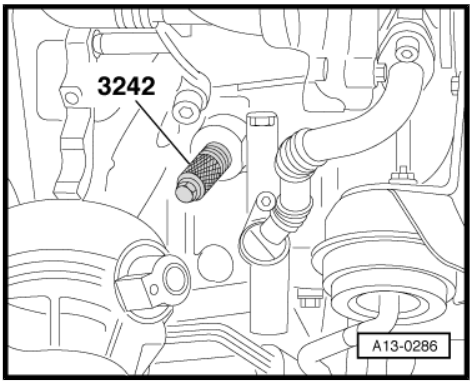

Note

A TDC hole can be felt in the crankshaft exactly behind the screw plug.

WARNING

To avoid possible injury, do not turn crankshaft whilst feeling for TDC hole.

– Screw locking bolt -3242- into hole of screw plug removed.

– Remove cover on right in engine compartment -arrows-.

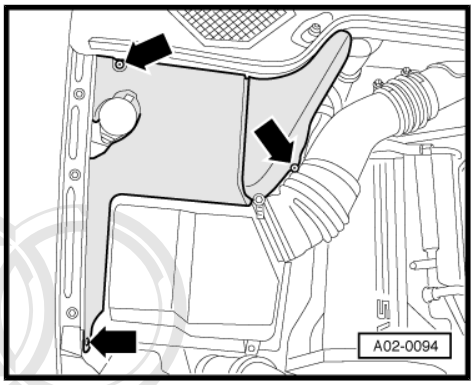

– Unfasten hose clamp -1-.

– Remove air cleaner housing -arrows-.

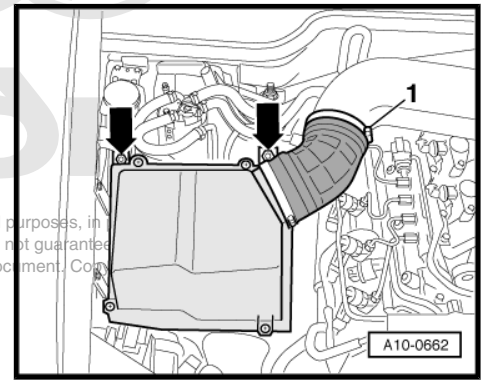

Protected by copyright. Copying for private or commercial purposes, in
permitted unless authorised by AUDI AG. AUDI AG does not guarantee
with respect to the correctness of information in this document. Co

– Remove top air pipe -arrows-.

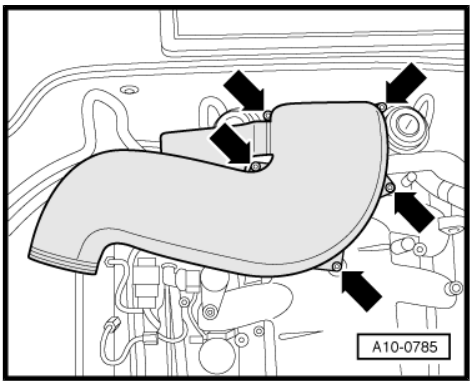

Note

Seal off inlet connections with clean cloths.

– Remove right air pipe -arrows-.

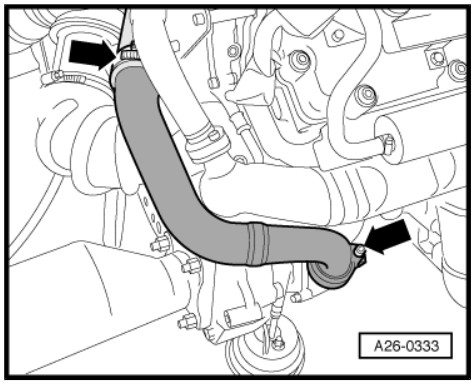

Note

Illustration shows engine removed.

– Remove right connecting pipe for exhaust gas recirculation -arrows-.

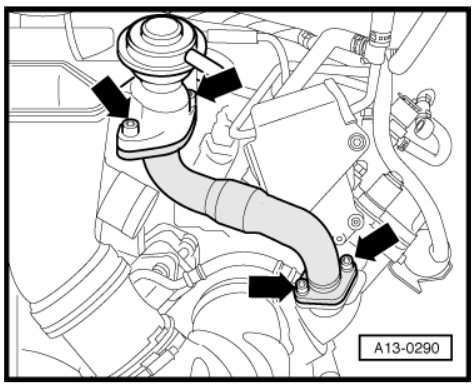

Note

Illustration shows engine removed.

Protected by copyright. Copying for private or commercial purposes, in part or in whole, is not permitted unless authorized by AUDI AG. AUDI AG does not guarantee or accept any liability with respect to the correctness of information in this document. Copyright by AUDI AG.

– Detach fuel pipes -1- and -2- at fuel pre-supply pump. To do so, press catch and lift off pipes -arrows-.

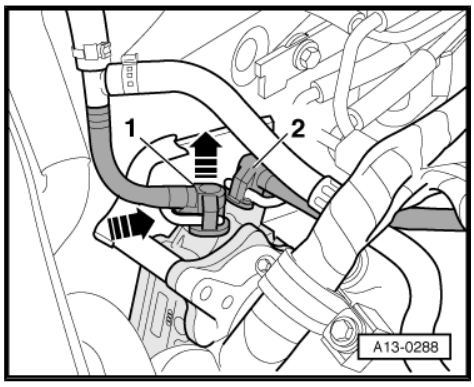

– Screw out bolts -arrows-.
– Detach fuel pre-supply pump.

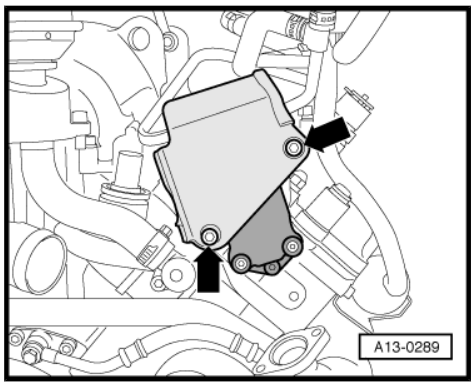

Note

Illustration shows engine removed.

– Slacken off cross-head bolts -1- at electronics box in plenum chamber.
– Unclip plenum chamber cover -2- at front at bulkhead -arrows-.
– Detach right plenum chamber cover.

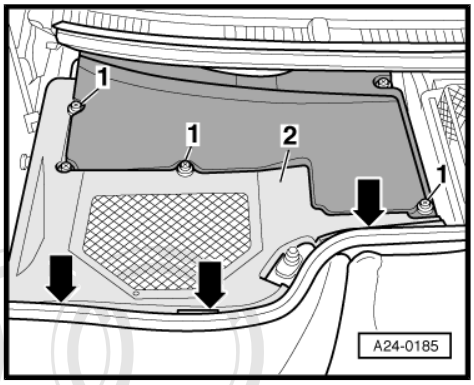

– Detach left plenum chamber cover -arrows-.

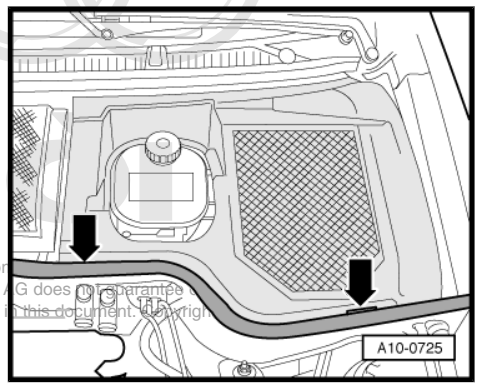

Protected by copyright. Copying for private or com
permitted unless authorised by AUDI AG. AUDI AG does not guarantee
with respect to the correctness of information in this document. Copyright

– Unscrew dome brace -2- -arrows-.

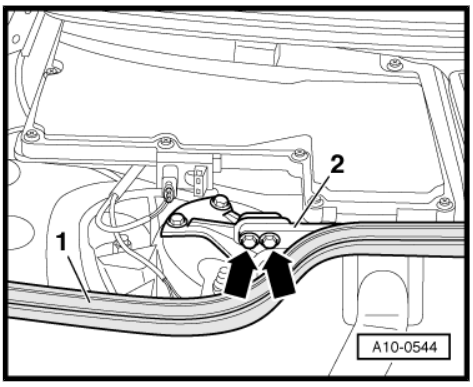

– Mark position of coolant hoses.
– Detach coolant hoses at breather connections -arrows-.
– Detach breather connections.

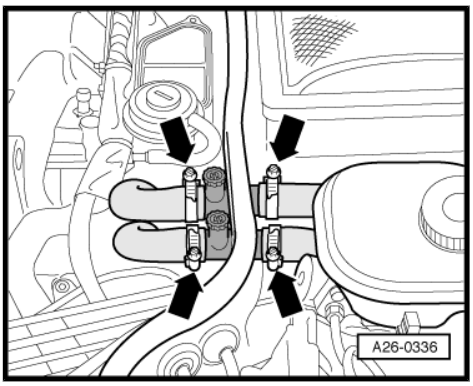

– Detach vacuum hoses -arrows-.
– Lay bare vacuum hoses.

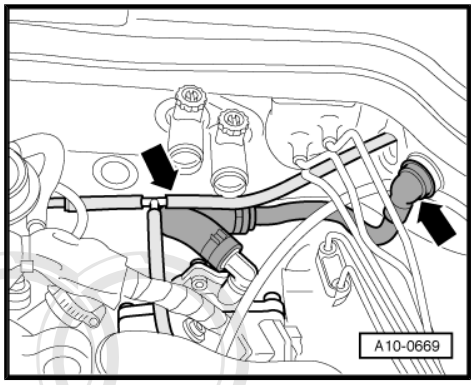

– Screw out bolts -1… 3- of vacuum pump at cylinder head on left and turn pump in -direction of arrow-.
– Detach vacuum pump.

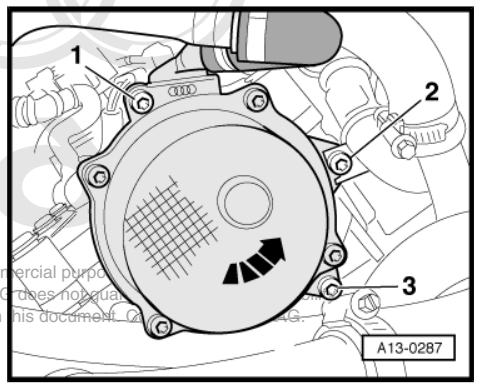

Note

Illustration shows engine removed.

Protected by copyright. Copying for private or commercial purpo
permitted unless authorised by AUDI AG. AUDI AG does not gua
with respect to the correctness of information in this document. Co AG.

– Insert camshaft retainers -3458- at both cylinder heads and secure with chain to stop them falling out.

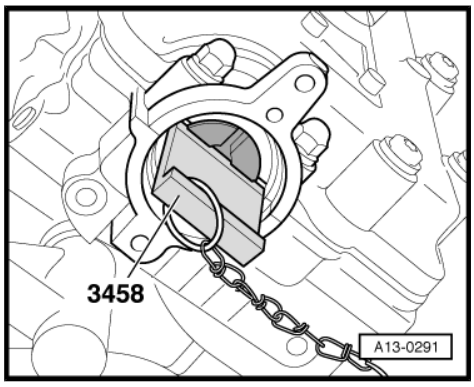

1.9 Turning engine to TDC - engine removed

Special tools and workshop equipment required

♦ Locking bolt -3242-

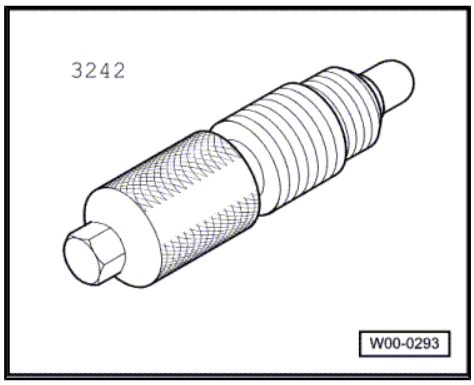

♦ Camshaft retainers -3458-

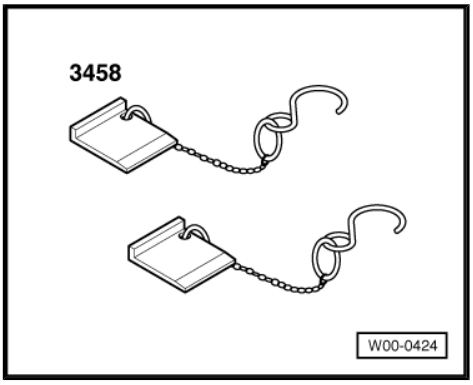

Sequence of operations

– Remove right air pipe -arrows-.

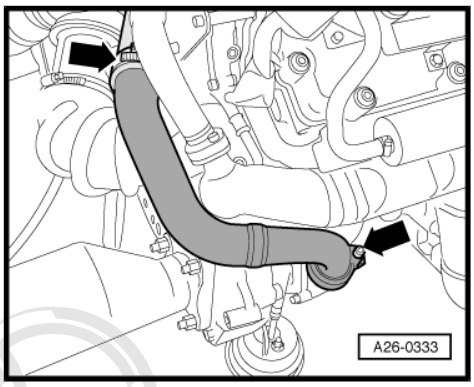

– Remove right connecting pipe for exhaust gas recirculation -arrows-.

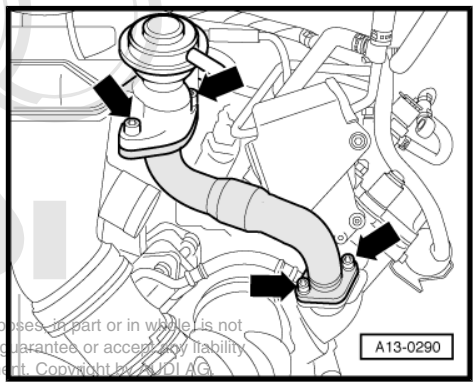

Protected by copyright. Copying for private or commercial purposes, in part or in whole, is not permitted unless authorised by AUDI AG. AUDI AG does not guarantee or accept any liability with respect to the correctness of information in this document. Copyright by AUDI AG.

– Detach fuel pipes -1- and -2- at fuel pre-supply pump. To do so, press catch and lift off pipes -arrows-.

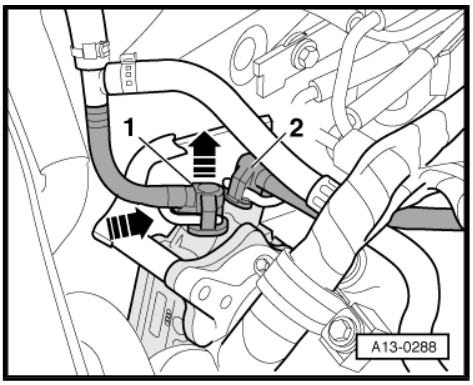

– Screw out bolts -arrows-.
– Detach fuel pre-supply pump.

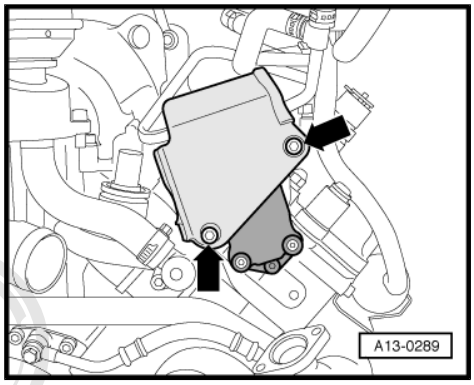

– Screw out bolts -1… 3- of vacuum pump at cylinder head on left and turn pump in -direction of arrow-.
– Detach vacuum pump.

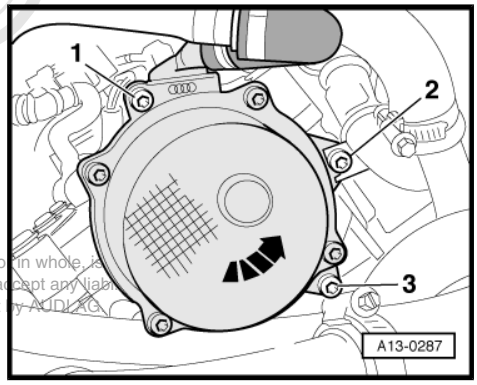

Caution

The engine is only to be turned at the crankshaft in the direction of engine rotation (clockwise).

Protected by copyright. Copying for private or commercial purposes, in part or in whole, is not permitted unless authorised by AUDI AG. AUDI AG does not guarantee or accept any liability with respect to the correctness of information in this document. Copyright by AUDI AG.

– Crank engine until asymmetrical groove at rear in camshaft is aligned with recesses at bearing cap at both cylinder heads -arrows-.

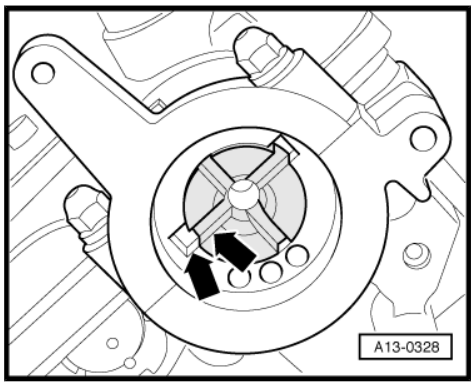

Note

Crank engine at crankshaft central bolt.

– Screw out TDC mark screw plug at top part of sump.

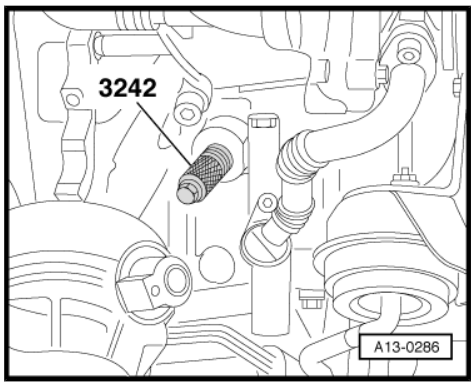

Note

A TDC hole can be felt in the crankshaft exactly behind the screw plug.

WARNING

To avoid possible injury, do not turn crankshaft whilst feeling for TDC hole.

– Screw locking bolt -3242- into hole of screw plug removed.

– Insert camshaft retainers -3458- at both cylinder heads and secure with chain to stop them falling out.

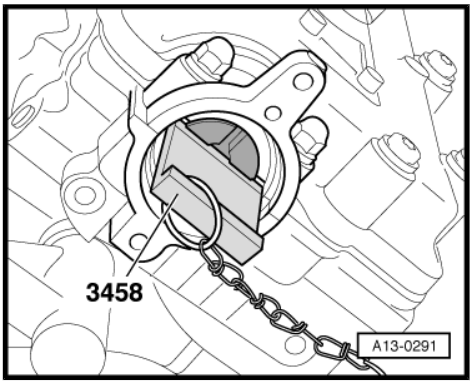

1.10 Removing and installing toothed belt

Special tools and workshop equipment required

- Counterhold -3036-
- Locking bolt -3242-
- Camshaft retainers -3458-
- Torque wrench -V.A.G 1783-
- Reversing ratchet -VAS 5122-
- Two-arm puller -T40001- with claw -T40001/5-

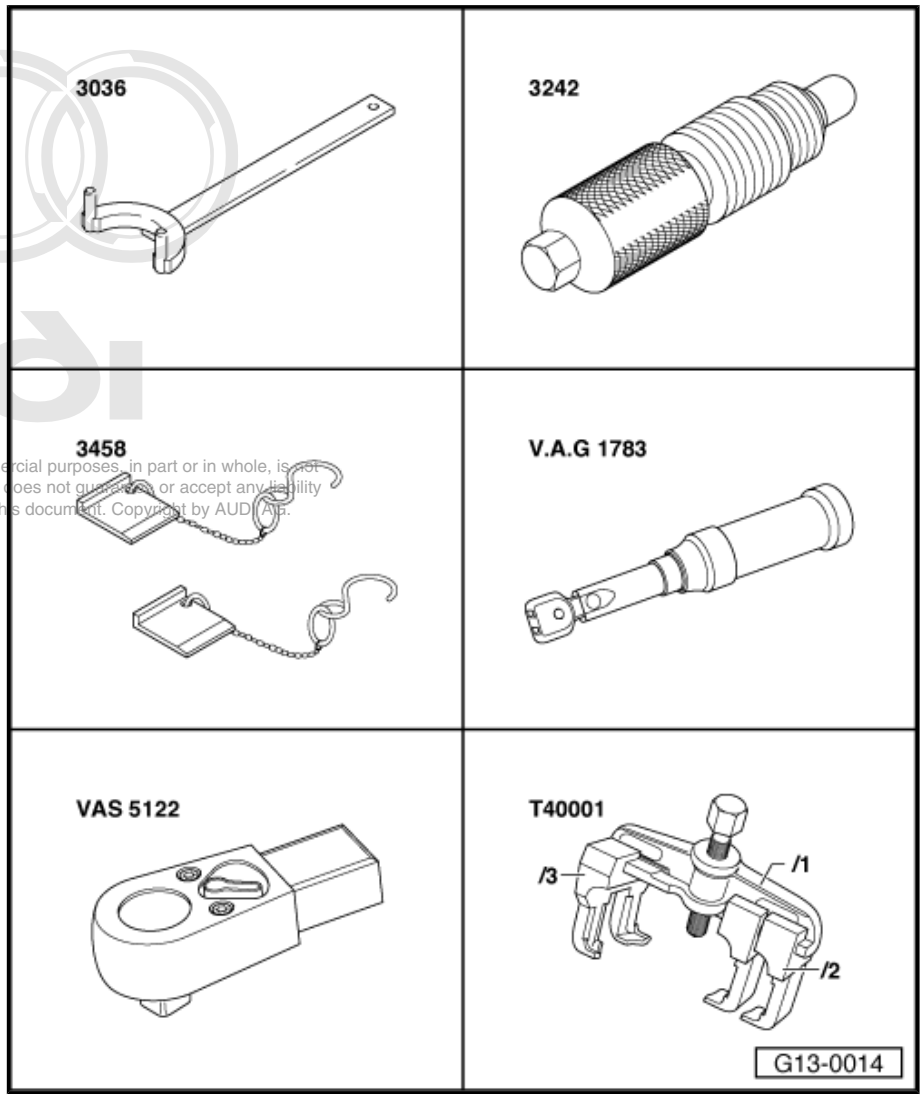

Protected by copyright. Copying for private or commercial purposes, in part or in whole, is not permitted unless authorised by AUDI AG. AUDI AG does not guarantee or accept any liability with respect to the correctness of information in this document. Copyright by AUDI AG.

- Tensioning roller wrench -T40009-

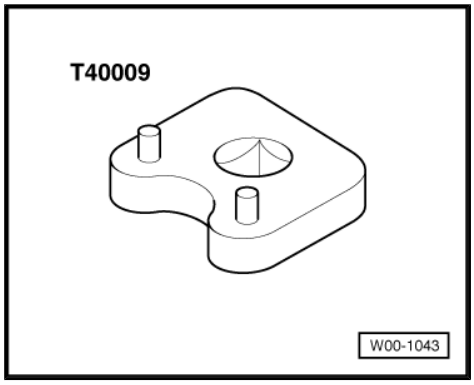

- Setting pin -T40011-

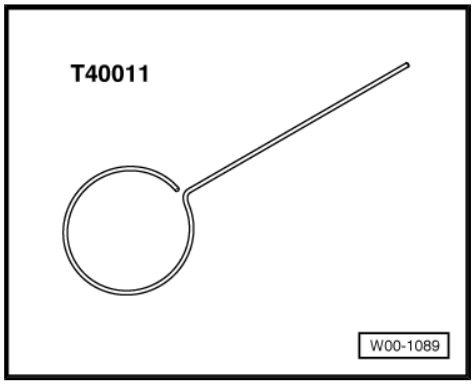

Removing

Note

Re-attach all cable ties unfastened or severed on removal at the same location on installation.

Engine in position:

- Turn crankshaft to TDC
  ⇒ “1.8 Turning engine to TDC - engine in position”, page 43 .
- Remove poly V-belt ⇒ page 36 .
- Unclip wiring harness from fan ring -arrows-.
- Screw out bolts -1 … 4-.
- Set down hydraulic radiator fan with hydraulic pipes connected on engine.

Engine removed:

- Turn crankshaft to TDC
  ⇒ “1.9 Turning engine to TDC - engine removed”, page 48 .

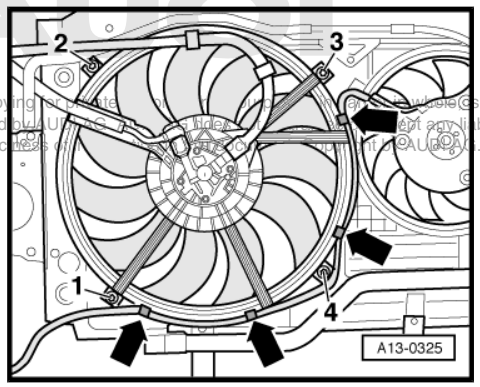

Protected by copyright. Copying for private or commercial purposes, in part or in whole, is not permitted unless authorised by AUDI AG. AUDI AG does not guarantee or accept any liability with respect to the correctness of information in this document. Copyright by AUDI AG.

Engine in position and removed (continued):

– Screw out 8 bolts -1- and remove crankshaft vibration damper.

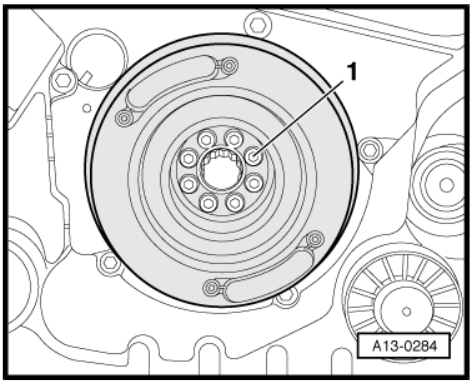

– Remove top right, top left and lower toothed belt guard ⇒ page 40 .

Note

The camshaft retainers are not to be used to provide support.

– Whilst providing support with counterhold -3036- , slacken off the bolts of both camshaft sprockets by approx. 3 turns.

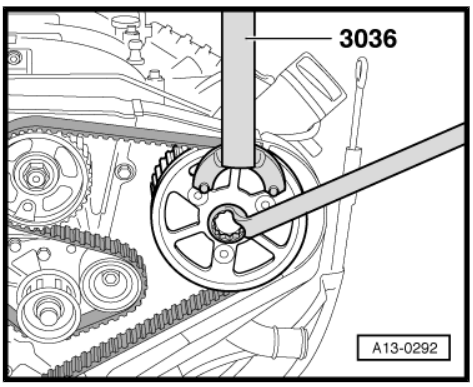

– Mark direction of toothed belt with chalk or a felt-tip pen.

– Use an 8 mm Allen key to turn toothed belt tensioning roller in -direction of arrow- until tensioning lever has compressed tensioning element to such an extent that setting pin -T40011- can be inserted in piston and housing holes.

Note

The toothed belt tensioning element is oil cushioned and can only be compressed slowly exerting uniform force.

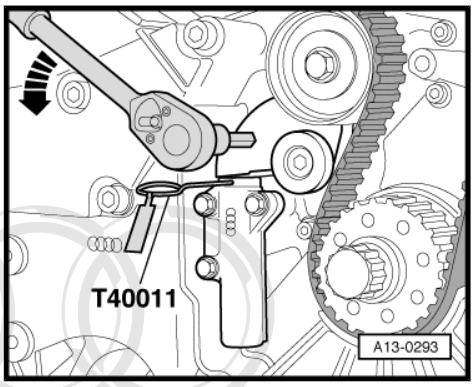

– Slacken off bolt -arrow- of eccentric roller.

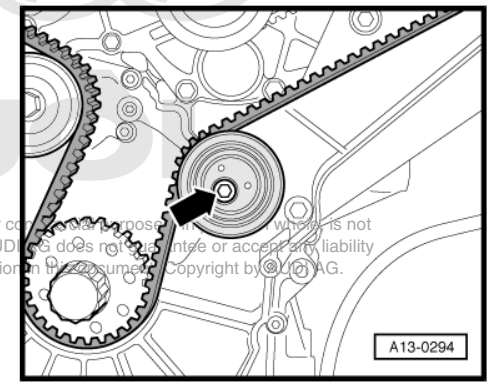

Protected by copyright. Copying for private or commercial purposes, in part or in whole, is not permitted unless authorised by AUDI AG. AUDI AG does not guarantee or accept any liability with respect to the correctness of information in this document. Copyright by AUDI AG.

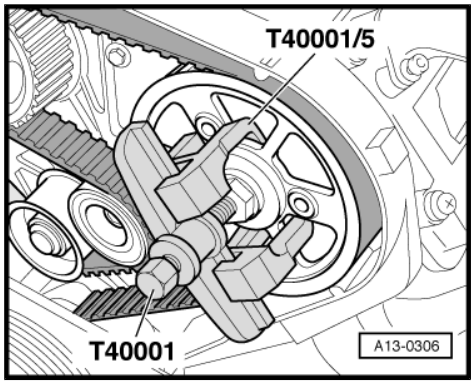

Note

The camshaft sprocket bolts slackened off by 3 … 4 turns are to be left screwed into the camshaft to provide support.

– Use two-arm puller -T40001- with claw -T40001/5- to detach camshaft sprockets from taper on left and right.
– Unscrew camshaft sprockets.
– Detach toothed belt with camshaft sprockets.

Installing (adjusting timing)

- Camshafts locked in position with camshaft retainers -3458-
- Crankshaft locked in position with locking bolt -3242-
- Camshaft sprockets unfastened

Note

- *When turning the camshaft, none of the crankshaft cylinders should be at TDC, as otherwise the valves/piston crown could be damaged.*
- *The camshaft retainers -3458- are not to be used to provide support.*

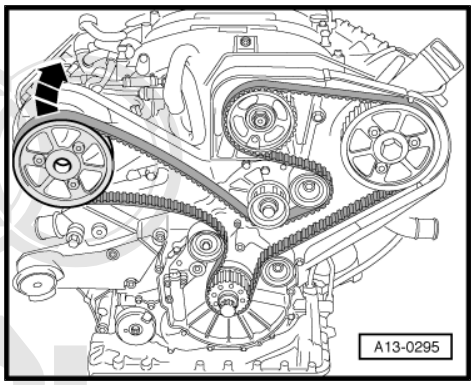

– Place the toothed belt on the pulleys in the following sequence:

1. Crankshaft
2. Tensioning roller
3. Eccentric roller
4. Left camshaft (with camshaft sprocket)
5. High-pressure pump
6. Idler wheel
7. Coolant pump
8. As a final step, position the toothed belt on the toothed belt sprocket of the right cylinder bank whilst still detached and attach the toothed belt sprocket with the toothed belt fitted to the camshaft -arrow-.

Protected by copyright. Copying for private or commercial purposes, in part or in whole, is not permitted unless authorised by AUDI AG. AUDI AG does not guarantee or accept any liability with respect to the correctness of information in this document. Copyright by AUDI AG.

– Screw on the two camshaft sprockets such that they can still just be turned and do not tilt.

– Lay a 4.0 mm Allen key flat between tensioning lever -1- and piston -2- of tensioning element.

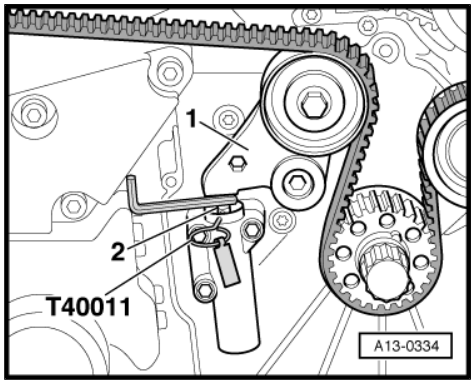

Note

Apply tensioning roller wrench -T40009- using 3/8" to 1/4" adapter.

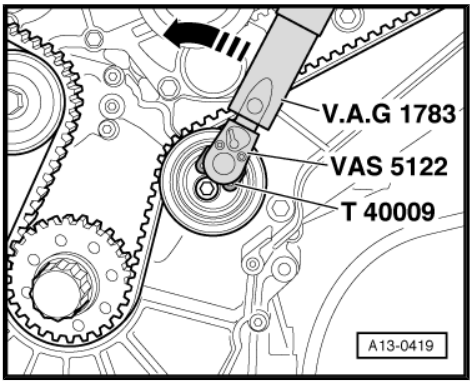

– Tension toothed belt. To do so, turn eccentric roller with tensioning roller wrench -T40009- and torque wrench -V.A.G 1783- with reversing ratchet -VAS 5122- in -direction of arrow- and maintain pre-tension.

• Pre-tensioning torque 3 Nm

– Tighten eccentric roller.

• Tightening torque 45 Nm

– Pull out 4.0 mm Allen key.

– Use 8 mm Allen key to turn tensioning lever in -direction of arrow- until setting pin -T40011- can be pulled out.

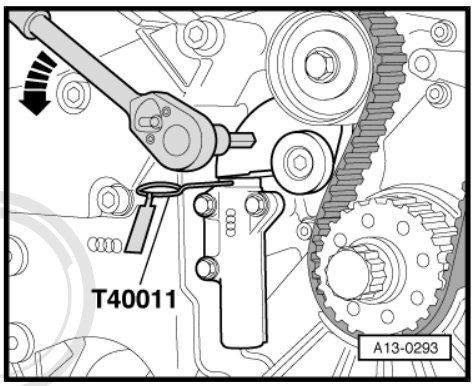

– Turn tensioning lever -1- in -direction of arrow- until 6.0 mm Allen key can be laid flat between tensioning lever and housing -2- of tensioning element.

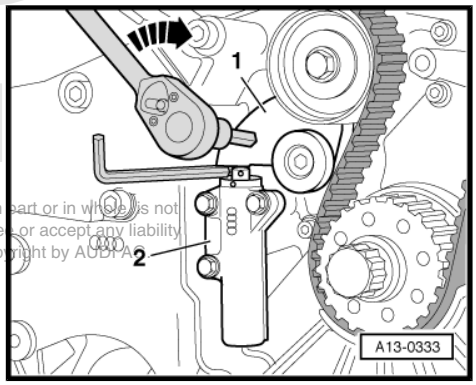

Protected by copyright. Copying for private or commercial purposes, in part or in whole, is not permitted unless authorised by AUDI AG. AUDI AG does not guarantee or accept any liability with respect to the correctness of information in this document. Copyright by AUDI AG

Note

The camshaft retainers -3458- are not to be used to provide support.

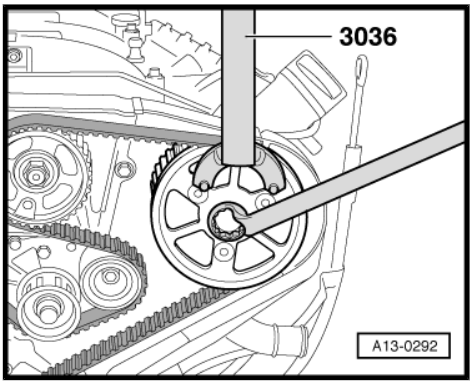

– Tighten camshaft sprockets. Use counterhold -3036- to provide support.

• Tightening torque 75 Nm

– Pull out 6.0 mm Allen key.

– Remove camshaft retainers -3458- at both cylinder heads.

– Remove locking bolt -3242- .

– Give crankshaft 2 turns in direction of engine rotation until crankshaft returns to TDC.

– Check dimension -a- between tensioning lever and housing of tensioning element and adjust at eccentric roller if necessary.

• Dimension -a- = 4.0 ± 1.0 mm

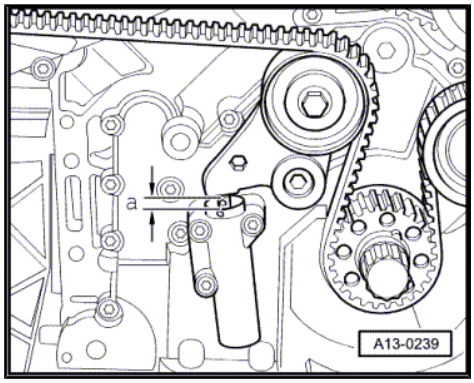

– As a check, screw locking bolt -3242- back into hole in top part of sump.

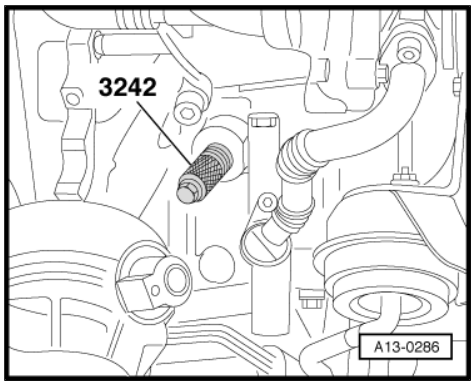

– Check position of camshafts with camshaft retainers -3458- .

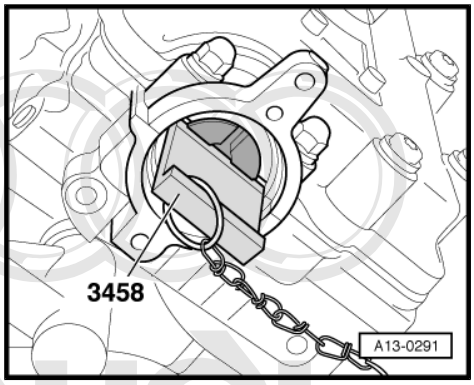

Note

Repeat adjustment if it is not possible to insert camshaft retainers.

– Remove camshaft retainers -3458- at both cylinder heads.

– Remove locking bolt -3242- .

Perform further installation in reverse order; paying attention to the following:

Protected by copyright. Copying for private or commercial purposes, in part or in whole, is not permitted unless authorised by AUDI AG. AUDI AG does not guarantee or accept any liability with respect to the correctness of information in this document. Copyright by AUDI AG.

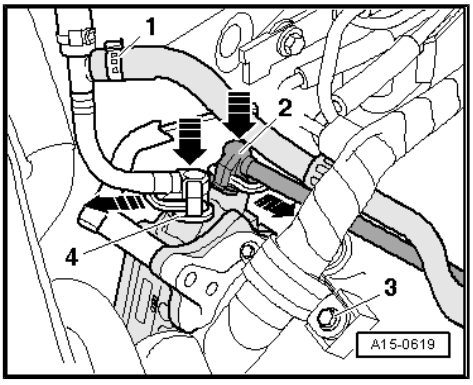

Note

- *Replace gaskets and seals.*
- *Secure all hose connections with standard clamps ⇒ Parts catalogue .*
- *Re-attach all cable ties in the same locations on installation.*
- *Heed the following on assembly: Pull catch outwards and press fuel pipe -2- onto fuel pre-supply pump connection until it engages -arrow-.*
- *If the pipe has been fitted properly, the catch will be loosely positioned in the hose coupling.*
- *-Item 1-, -Item 3- and -Item 4- can be ignored.*

– Screw TDC mark screw plug with new oil seal into top part of sump.

– Install vacuum pump at cylinder head on left ⇒ page 102 .

– Fit poly V-belt ⇒ page 37 .

– Replenish coolant ⇒ page 168 .

Tightening torques

Component		Nm
Camshaft sprocket to camshaft		75
Eccentric roller to cylinder block		45
Fuel pre-supply pump to cylinder head		10
Vibration damper to crankshaft sprocket		22
Screw plug in top part of sump		35
Oil filler neck to cylinder head		10
Connecting pipe for exhaust gas recirculation to	Mechanical exhaust gas recirculation valve	22
	Exhaust manifold	10
Air pipe to turbocharger		10
Top air pipe to	Rear air pipe	10
	Intake manifold	10
Clamps for coolant hoses		2
Clamps for air hoses		3,5

Protected by copyright. Copying for private or commercial purposes, in part or in whole, is not permitted unless authorised by AUDI AG. AUDI AG does not guarantee or accept any liability with respect to the correctness of information in this document. Copyright by AUDI AG.

1.11 Detaching toothed belt from camshaft sprockets

Special tools and workshop equipment required

- Counterhold -3036-
- Locking bolt -3242-
- Camshaft retainers -3458-
- Two-arm puller -T40001- with claw -T40001/5-
- Setting pin -T40011-

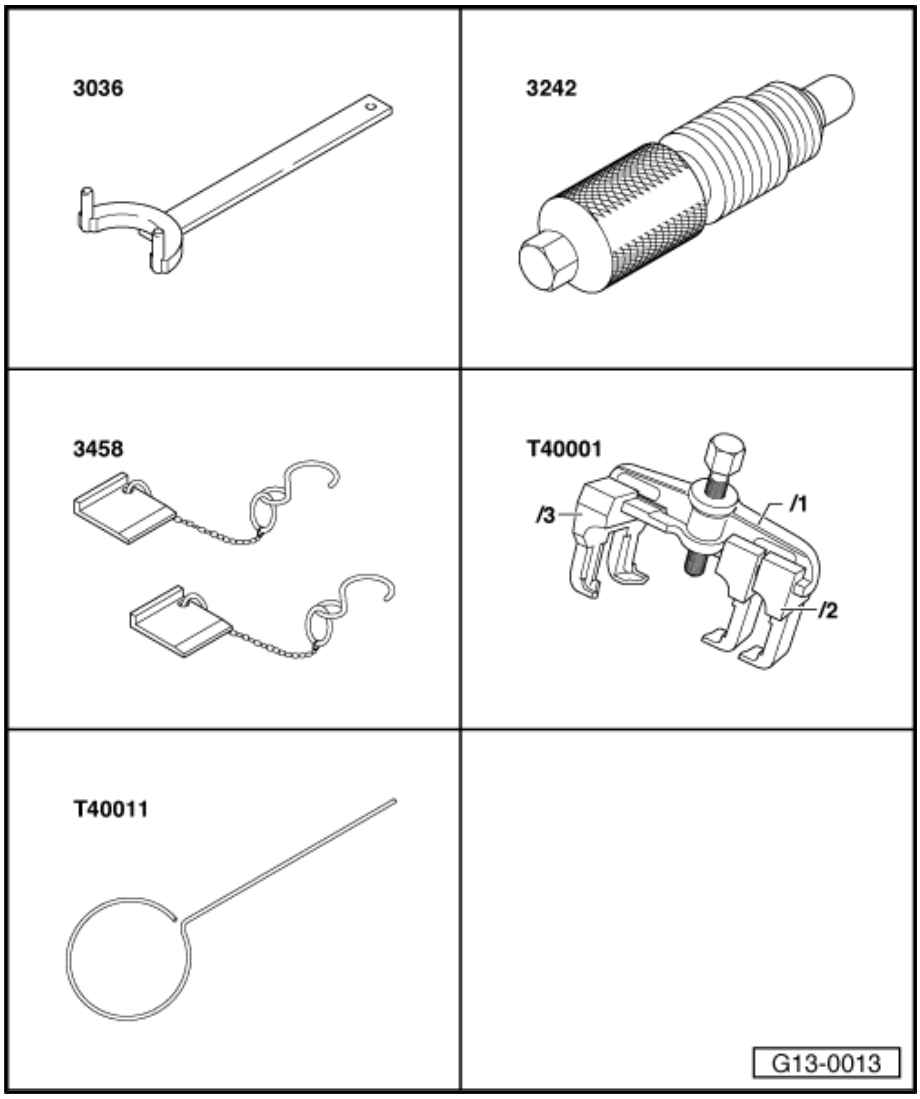

Removing

Note

- *Check whether toothed belt replacement is required on account of service life and condition.*
- *If toothed belt replacement is necessary, proceed as described for removing the entire toothed belt* *⇒ page 51* *.*
- *Re-attach all cable ties unfastened or severed on removal at the same location on installation.*

Protected by copyright. Copying for private or commercial purposes, in part or in whole, is not permitted unless authorised by AUDI AG. AUDI AG does not guarantee or accept any liability with respect to the correctness of information in this document. Copyright by AUDI AG.

Engine in position:

– Turn crankshaft to TDC
⇒ “1.8 Turning engine to TDC - engine in position”, page 43 .

– Remove poly V-belt ⇒ page 36 .

– Unclip wiring harness from fan ring -arrows-.

– Screw out bolts -1 … 4-.

– Set down hydraulic radiator fan with hydraulic pipes connected on engine.

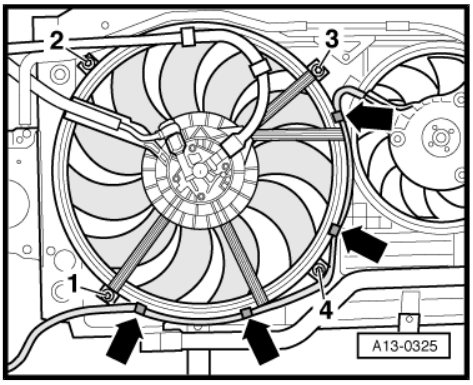

Engine removed:

– Turn crankshaft to TDC
⇒ “1.9 Turning engine to TDC - engine removed”, page 48 .

Engine in position and removed (continued):

– Remove top left and top right toothed belt guard ⇒ page 40 .

Note

The camshaft retainers are not to be used to provide support.

– Whilst providing support with counterhold -3036- , slacken off the bolts of both camshaft sprockets by approx. 3 turns.

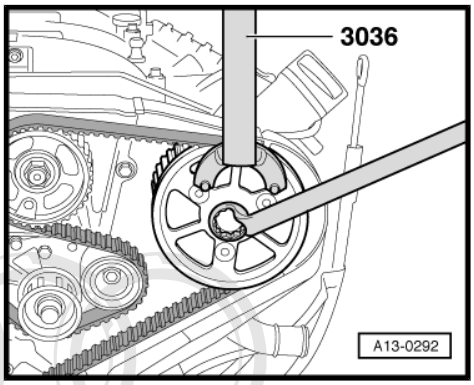

– Detach cap at lower toothed belt guard.

– Use an 8 mm Allen key to turn toothed belt tensioning roller in -direction of arrow- until tensioning lever has compressed tensioning element to such an extent that setting pin -T40011- can be inserted in piston and housing holes.

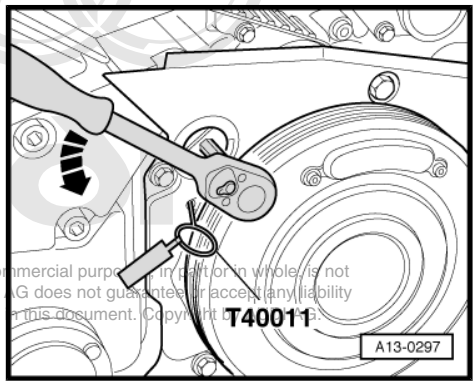

Note

- *A small hole is provided in the lower toothed belt guard for inserting the setting pin -T40011- .*
- *The toothed belt tensioning element is oil cushioned and can only be compressed slowly exerting uniform force.*

Protected by copyright. Copying for private or commercial purposes, in part or in whole, is not permitted unless authorised by AUDI AG. AUDI AG does not guarantee or accept any liability with respect to the correctness of information in this document. Copyright by AUDI AG.

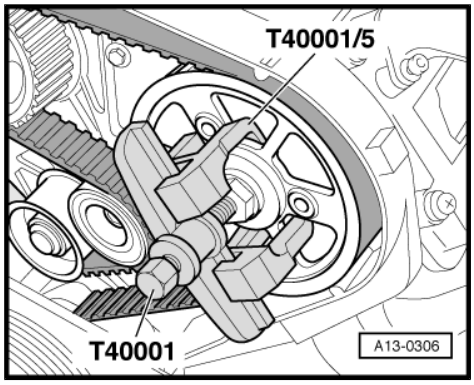

Note

The camshaft sprocket bolts slackened off by 3 … 4 turns are to be left screwed into the camshaft to provide support.

– Use two-arm puller -T40001- with claw -T40001/5- to detach camshaft sprockets from taper on left and right.

– Unscrew camshaft sprockets.

– Detach toothed belt with camshaft sprockets.

Installing (adjusting timing)

- Camshafts locked in position with camshaft retainers -3458-
- Crankshaft locked in position with locking bolt -3242-
- Camshaft sprockets unfastened

Note

- *When turning the camshaft, none of the crankshaft cylinders should be at TDC, as otherwise the valves/piston crown could be damaged.*
- *The camshaft retainers -3458- are not to be used to provide support.*

– Position toothed belt on pulleys as shown.

– As a final step, position the toothed belt on the toothed belt sprocket of the right cylinder bank whilst still detached and attach the toothed belt sprocket with the toothed belt fitted to the camshaft -arrow-.

– Screw on the two camshaft sprockets such that they can still just be turned and do not tilt.

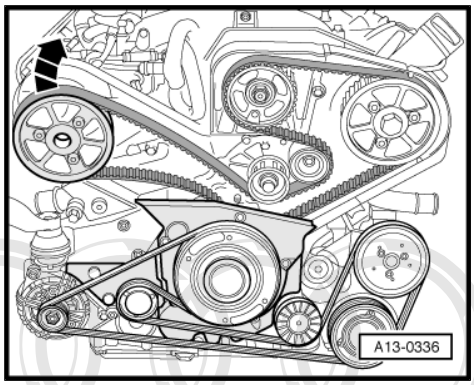

– Use 8 mm Allen key to turn tensioning lever in -direction of arrow- until setting pin -T40011- can be pulled out.

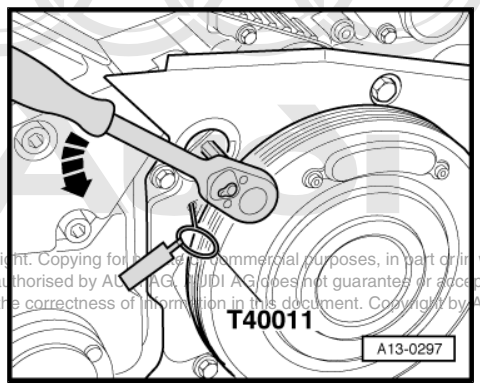

Protected by copyright. Copying for private or commercial purposes, in part or in whole, is not permitted unless authorised by AUDI AG. AUDI AG does not guarantee or accept any liability with respect to the correctness of information in this document. Copyright by AUDI AG.

– By turning in -direction of arrow-, pre-tension toothed belt with a torque wrench to 40 Nm.

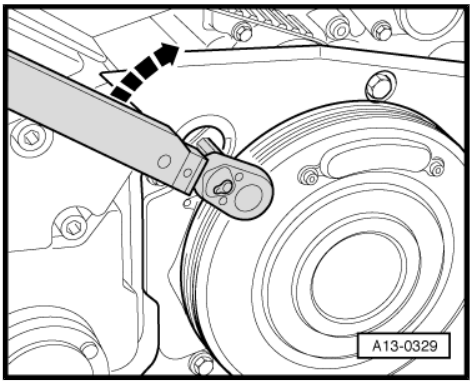

Note

The camshaft retainers -3458- are not to be used to provide support.

– Tighten camshaft sprockets. Use counterhold -3036- to provide support.

• Tightening torque 75 Nm

– Remove camshaft retainers -3458- from both cylinder heads.

– Remove locking bolt -3242- .

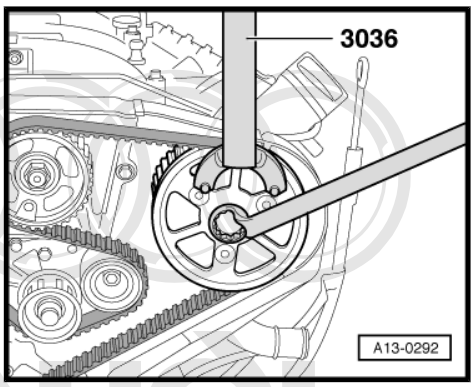

– Give crankshaft 2 turns in direction of engine rotation until crankshaft returns to TDC.

– Check dimension -a- between tensioning lever and housing of tensioning element.

• Dimension -a- = 4.0 ± 1.0 mm

Protected by copyright. Copying for private or commercial purposes, in part or in whole, is not permitted unless authorised by AUDI AG. AUDI AG does not guarantee or accept any liability with respect to the correctness of information in this document. Copyright by AUDI AG.

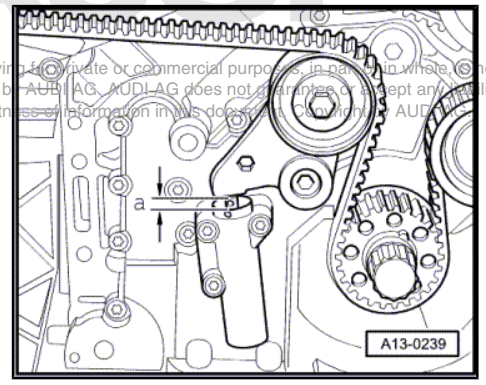

Note

♦ *Illustration shows lower toothed belt guard removed.*

♦ *Use angled 4 mm Allen key for checking.*

If dimension -a- is not attained:

– Perform complete adjustment ⇒ page 54 .

– As a check, screw locking bolt -3242- back into hole in top part of sump.

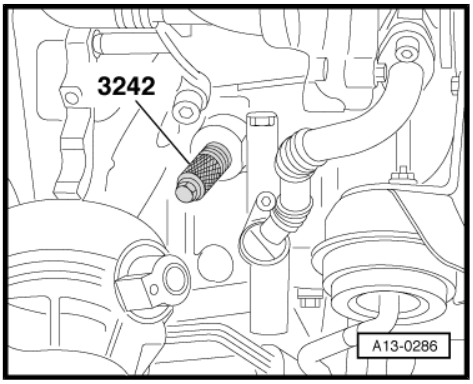

– Check position of camshafts with camshaft retainers -3458- .

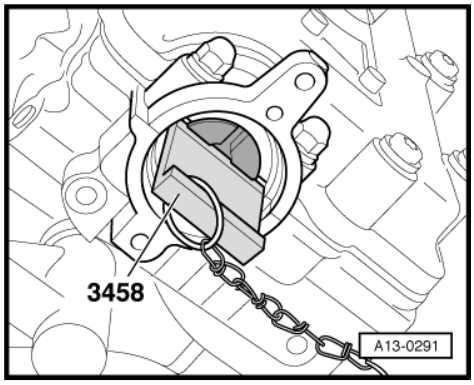

Note

Repeat adjustment if it is not possible to insert camshaft retainers.

– Remove camshaft retainers -3458- at both cylinder heads.

– Remove locking bolt -3242- .

Perform further installation in reverse order; paying attention to the following:

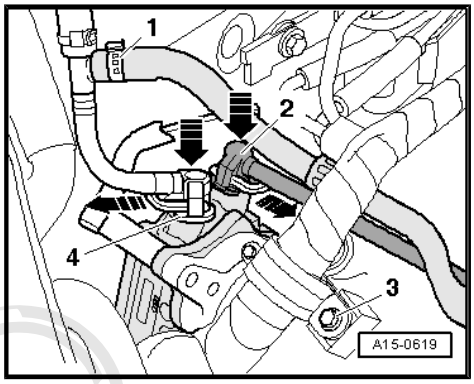

Note

- *Replace gaskets and seals.*
- *Secure all hose connections with standard clamps ⇒ Parts catalogue .*
- *Re-attach all cable ties in the same locations on installation.*
- *Heed the following on assembly: Pull catch outwards and press fuel pipe -2- onto fuel pre-supply pump connection until it engages -arrow-.*
- *If the pipe has been fitted properly, the catch will be loosely positioned in the hose coupling.*
- *-Item 1-, -Item 3- and -Item 4- can be ignored.*

– Screw TDC mark screw plug with new oil seal into top part of sump.

– Install vacuum pump at cylinder head on left ⇒ page 102 .

– Fit poly V-belt ⇒ page 37 .

– Replenish coolant ⇒ page 168 .

Tightening torques

Protected by copyright. Copying for private or commercial purposes, in part or in whole, is not permitted unless authorised by AUDI AG. AUDI AG does not guarantee or accept any liability with respect to the correctness of information in this document. Copyright by AUDI AG.

Component		Nm
Camshaft sprocket to camshaft		75
Fuel pre-supply pump to cylinder head		10
Screw plug in top part of sump		35
Oil filler neck to cylinder head		10
Connecting pipe for exhaust gas recirculation to	Mechanical exhaust gas recirculation valve	22
	Exhaust manifold	10
Air pipe to turbocharger		10
Top air pipe to	Rear air pipe	10
	Intake manifold	10
Clamps for coolant hoses		2
Clamps for air hoses		3,5

2 Servicing work on pulley end

2.1 Exploded view of sealing flanges and drive plate

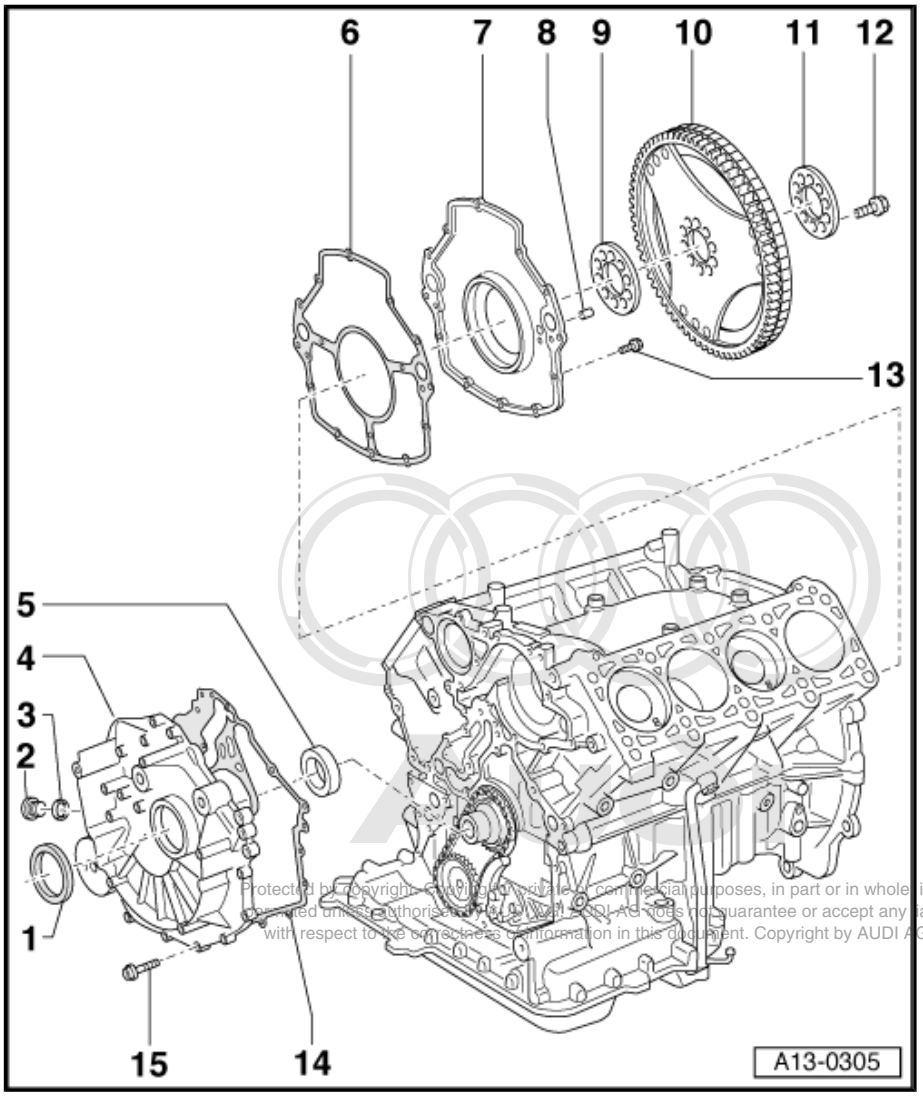

Protected by copyright. Copying for private or commercial purposes, in part or in whole is not permitted unless authorised by AUDI AG. AUDI AG does not guarantee or accept any liability with respect to the correctness of information in this document. Copyright by AUDI AG.

1 - Oil seal
- ❑ For crankshaft
- ❑ Removing and installing ⇒ page 64

2 - Screw plug - 22.5 Nm
- ❑ Replace
- ❑ Only available together with ⇒ Item 3 (page 63)

3 - Oil seal
- ❑ Only available together with ⇒ Item 2 (page 63)

4 - Front sealing flange
- ❑ Removing and installing ⇒ page 66

5 - Thrust washer
- ❑ Detach if scored and turn or replace ⇒ page 64

6 - Gasket
- ❑ Replace
- ❑ Before fitting gasket, apply thin coat of sealant to transitions between top part of sump and cylinder block; sealant ⇒ Parts catalogue

7 - Rear sealing flange with oil seal
- ❑ Removing and installing ⇒ page 69

8 - Fitted pin
- ❑ Ensure firm attachment in crankshaft

9 - Shim

10 - Drive plate
- ❑ With sender wheel
- ❑ Removing and installing ⇒ page 70

11 - Packing plate

12 - 30 Nm + further 90° (1/4) turn
- ❑ Replace

13 - 10 Nm

14 - Gasket
- ❑ Replace
- ❑ Before fitting gasket, apply thin coat of sealant to transitions between top part of sump and cylinder block; sealant ⇒ Parts catalogue

15 - 10 Nm

2.2 Replacing crankshaft oil seal on pulley end

Special tools and workshop equipment required

♦ Thrust piece -T40007-

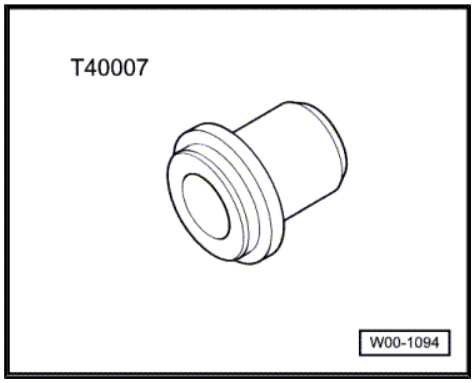

♦ Oil seal extractor -T40019-

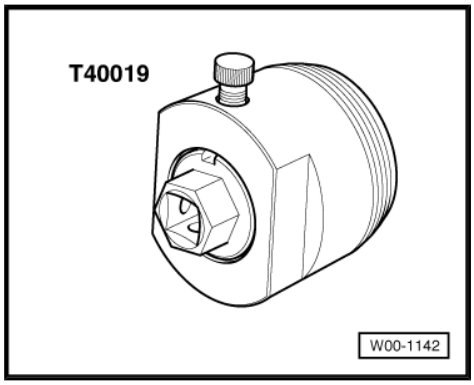

Sequence of operations

- Engine in position

– Remove toothed belt ⇒ page 51 .

– Screw out central bolt -2- for crankshaft toothed belt sprocket -1-.

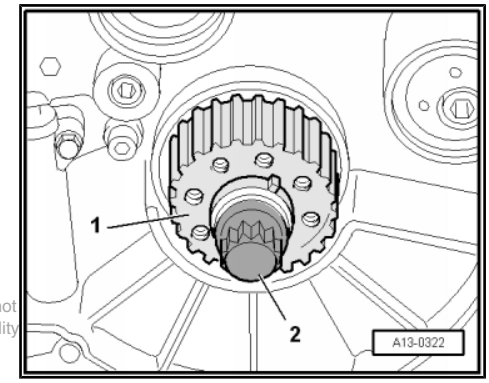

Note

The central bolt is slackened off with the locking bolt -3242- screwed in.

Protected by copyright. Copying for private or commercial purposes, in part or in whole, is not permitted unless authorised by AUDI AG. No liability can be accepted for the correctness of information in this document. Copyright by AUDI AG.

– Detach toothed belt sprocket.

– Screw inner part of oil seal extractor -T40019- out of outer part by roughly 6 turns and lock with knurled screw.
– Lubricate threaded end of oil seal extractor, fit in position and screw as far as possible into oil seal whilst exerting firm pressure.
– Slacken off knurled screw and turn inner part towards crankshaft until oil seal has been extracted.
– Clamp flats of oil seal extractor in a vice and use pliers to remove oil seal.

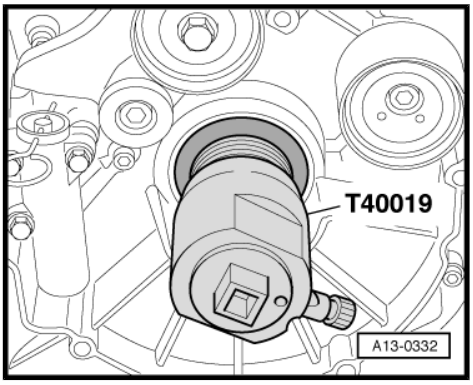

– Use waterproof felt-tip pen to mark end face of thrust washer -arrow-.
– Detach thrust washer from crankshaft.

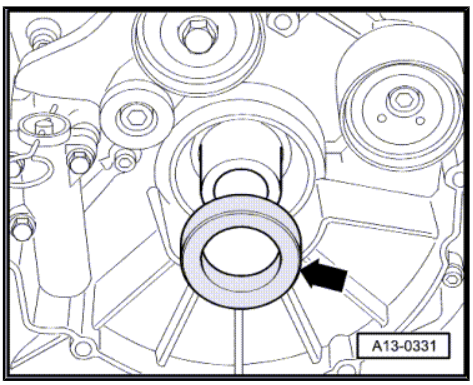

– Clean contact and sealing surfaces.

Note

Do not lubricate sealing lip and outer rim of oil seal before pressing in.

– Press in oil seal with thrust piece -T40007- and central bolt.

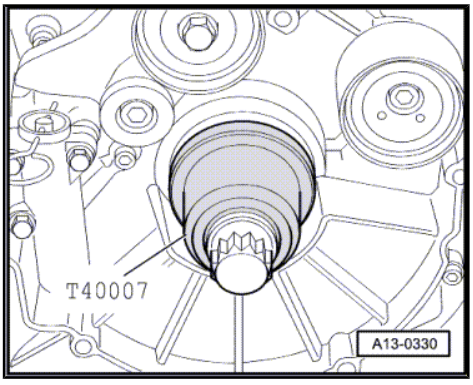

– Turn thrust washer -arrow- and attach it to crankshaft.

Note

- *The thrust washer is turned so that the new oil seal runs on a new sealing track.*
- *The marked end face of the thrust washer must now be facing the engine.*

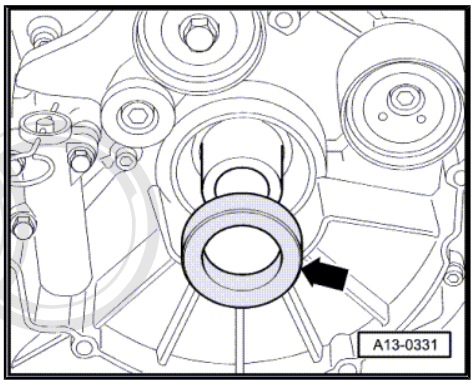

Protected by copyright. Copying for private or commercial purposes, in part or in whole, is not permitted unless authorised by AUDI AG. AUDI AG does not guarantee or accept any liability with respect to the correctness of information in this document. Copyright by AUDI AG.

– Install crankshaft toothed belt sprocket -1- with new central bolt -2-.

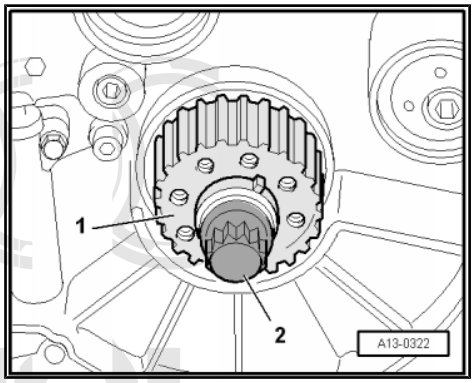

Note

- *There must not be any oil at contact surface between toothed belt sprocket and crankshaft.*
- *Do not lubricate bolt for crankshaft toothed belt sprocket.*

Perform further installation in reverse order; paying attention to the following:

– Fit toothed belt (adjust timing) ⇒ page 54 .

Tightening torque

Component	Nm
Toothed belt sprocket to crankshaft	200 + 180° 2) 3)

2) Replace bolt.

3) 180° corresponds to half a turn.

Protected by copyright. Copying for private or commercial purposes, in part or in whole, is not permitted unless authorized by AUDI AG. AUDI AG does not guarantee or accept any liability with respect to the correctness of information in this document. Copyright by AUDI AG.

2.3 Removing and installing front sealing flange

Special tools and workshop equipment required

- Thrust piece -T40007-

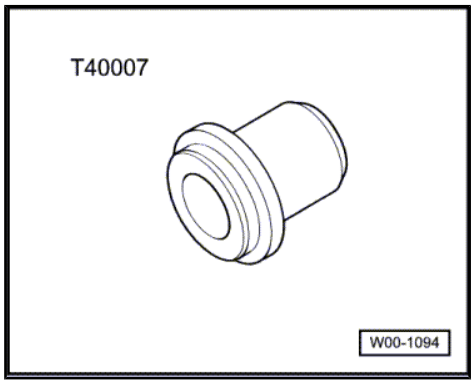

- Used oil collector and extractor -V.A.G 1782- or -V.A.G 1358 A-

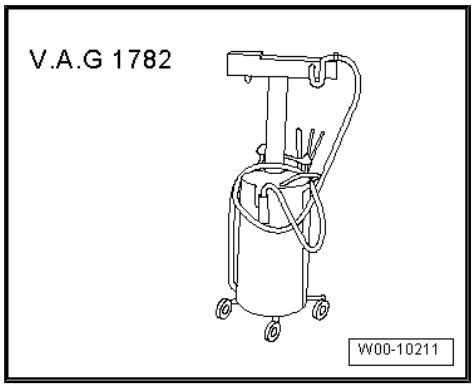

Removing

- Engine in position

– Place used oil collector and extractor -V.A.G 1782- or -V.A.G 1358 A- beneath engine and drain off engine oil.

– Remove toothed belt ⇒ page 51 .

– Unscrew tensioning roller for poly V-belt -arrow-.

– Remove cover behind tensioning roller.

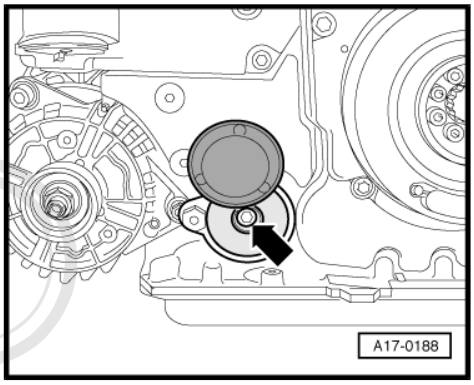

– Screw out bolts -arrows- and detach rear left toothed belt guard.

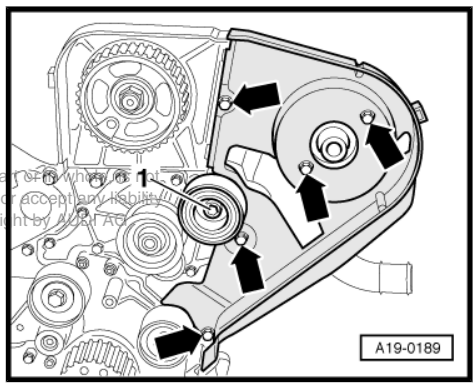

Note

-Item 1- can be ignored.

Protected by copyright. Copying for private or commercial purposes, in part or in whole, is not permitted unless authorised by AUDI AG. AUDI AG does not guarantee or accept any liability with respect to the correctness of information in this document. Copyright by AUDI AG

– Screw out central bolt -2- for crankshaft toothed belt sprocket -1-.

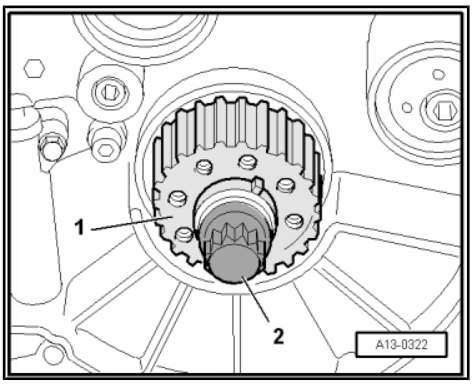

Note

The central bolt is slackened off with the locking bolt -3242- screwed in.

– Detach toothed belt sprocket.

– Unscrew eccentric roller -3-, tensioning lever with tensioning roller -2- and tensioning element -1-.

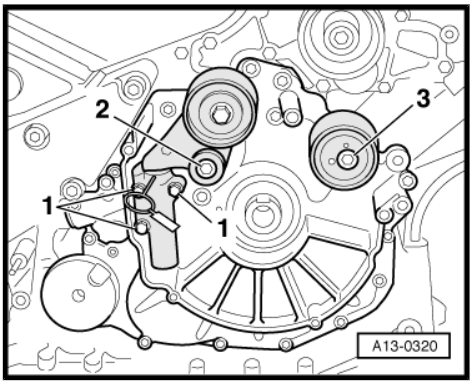

– Screw out bolts -1-.
– Detach front sealing flange.
– Drive out oil seal with flange removed.

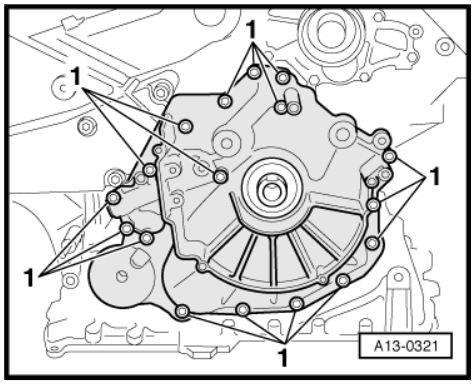

– Use waterproof felt-tip pen to mark end face of thrust washer -arrow-.
– Detach thrust washer from crankshaft.

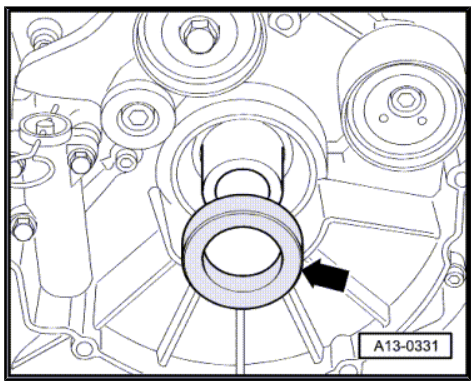

Note

Illustration shows sealing flange in position.

Installing

Install in reverse order; paying attention to the following:

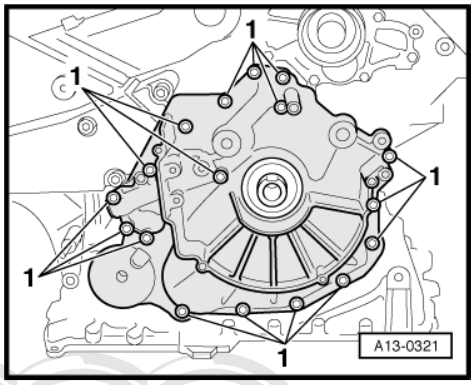

Note

Replace gaskets and seals.

– Clean sealing surfaces before fitting sealing flange.
– Before fitting gasket, apply thin coat of sealant to transitions between top part of sump and cylinder block ⇒ Parts catalogue .
– Tighten bolts -1-.

– Clean contact and sealing surfaces for oil seal.

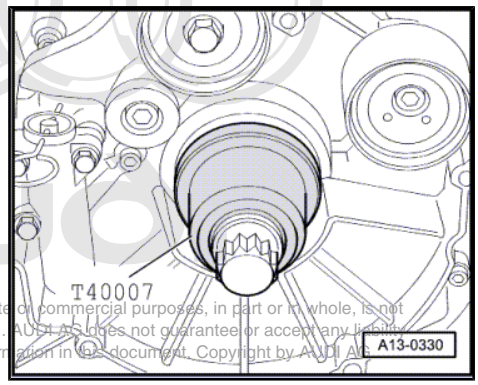

Note

Do not lubricate sealing lip and outer rim of oil seal before pressing in.

– Press in oil seal with thrust piece -T40007- and central bolt.

Protected by copyright. Copying for private or commercial purposes, in part or in whole, is not permitted unless authorised by AUDI AG. AUDI AG does not guarantee or accept any liability with respect to the correctness of information in this document. Copyright by AUDI AG.

– Turn thrust washer -arrow- and attach it to crankshaft.

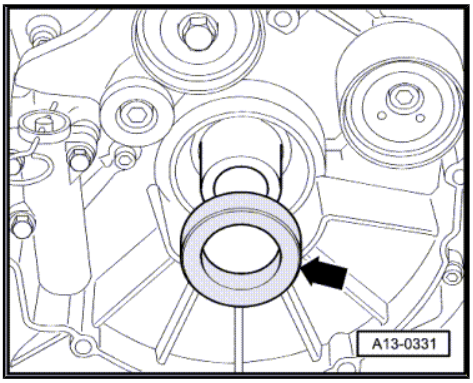

Note

- *The thrust washer is turned so that the new oil seal runs on a new sealing track.*
- *The marked end face of the thrust washer must now be facing the engine.*

– Install crankshaft toothed belt sprocket -1- with new central bolt -2-.

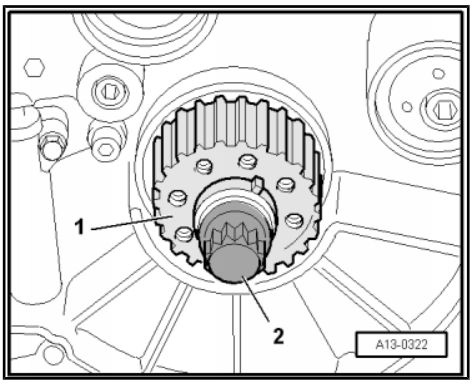

Note

- *There must not be any oil at contact surface between toothed belt sprocket and crankshaft.*
- *Do not lubricate bolt for crankshaft toothed belt sprocket.*
- *Pay attention to packing plate beneath tensioning lever.*

– Fit toothed belt (adjust timing) ⇒ page 54 .

– Pour in engine oil and check oil level ⇒ page 161 .

Tightening torques

Component	Nm
Front sealing flange to cylinder block	10
Toothed belt sprocket to crankshaft	200 + 180° [4) 5)]
Tensioning element to front sealing flange	10
Tensioning lever to cylinder block	45
Poly V-belt tensioner to top part of sump	45
Rear toothed belt guard to engine	10
Oil drain plug to bottom part of sump	50

4) Replace bolt.

5) 180° corresponds to half a turn.

2.4 Removing and installing rear sealing flange

- Engine removed ⇒ page 4
- Engine separated from gearbox ⇒ page 22

Protected by copyright. Copying for private or commercial purposes, in part or in whole, is not permitted unless authorised by AUDI AG. AUDI AG does not guarantee or accept any liability with respect to the correctness of information in this document. Copyright by AUDI AG.

Removing

– Remove drive plate ⇒ page 70 .

– Unscrew rear sealing flange -arrow-.

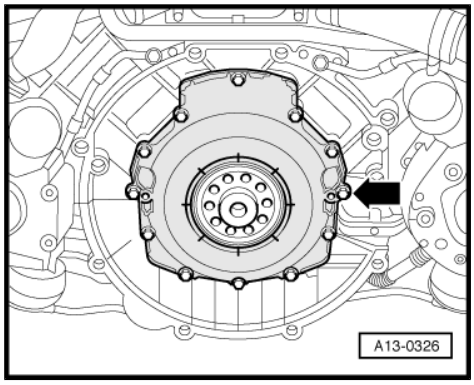

Installing

Install in reverse order; paying attention to the following:

– Clean sealing surfaces before fitting sealing flange.

– Before fitting gasket, apply thin coat of sealant to transitions between top part of sump and cylinder block ⇒ Parts catalogue .

– Use guide sleeve from installation set for attaching oil seal to crankshaft.

– Fit drive plate ⇒ page 70 .

Tightening torques

Component		Nm
Rear sealing flange to	Cylinder block	10
	Top part of sump	10

2.5 Removing and installing drive plate

Special tools and workshop equipment required

♦ Locking bolt -3242-

Protected by copyright. Copying for private or commercial purposes, in part or in whole, is not permitted unless authorised by AUDI AG. AUDI AG does not guarantee or accept any liability with respect to the correctness of information in this document. Copyright by AUDI AG.

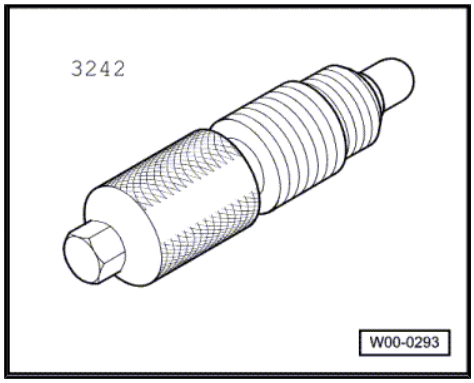

Removing

• Engine removed ⇒ page 4

• Engine separated from gearbox ⇒ page 22

– Unscrew oil filler neck.

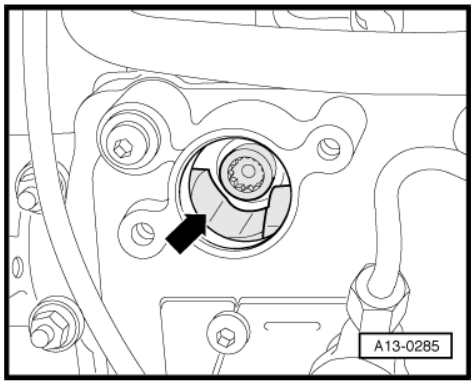

Caution

The engine is only to be turned at the crankshaft in the direction of engine rotation (clockwise).

– Crank engine until recess -arrow- at camshaft is positioned such that bolt is visible.

Note

Crank engine at crankshaft central bolt.

– Screw out TDC mark screw plug at top part of sump.

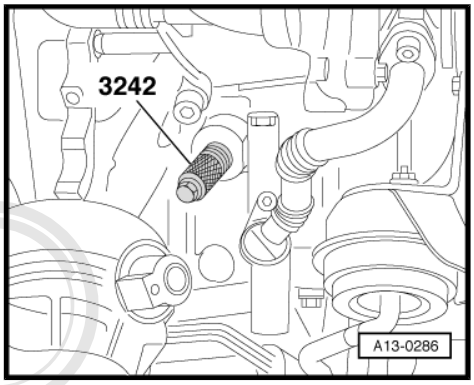

Note

A TDC hole can be felt in the crankshaft exactly behind the screw plug.

WARNING

To avoid possible injury, do not turn crankshaft whilst feeling for TDC hole.

– Screw locking bolt -3242- into hole of screw plug removed.

– Unscrew drive plate.

Installing

Install in reverse order; paying attention to the following:

Protected by copyright. Copying for private or commercial purposes, in part or in whole, is not permitted unless authorised by AUDI AG. AUDI AG does not guarantee or accept any liability with respect to the correctness of information in this document. Copyright by AUDI AG.

Note

Replace gaskets and seals.

– Fit drive plate together with the following:

1 - Shim: Thickness 3.65 mm

2 - Packing plate: Thickness 1.50 mm

– Replace and tighten bolts.

– Install engine ⇒ page 26 .

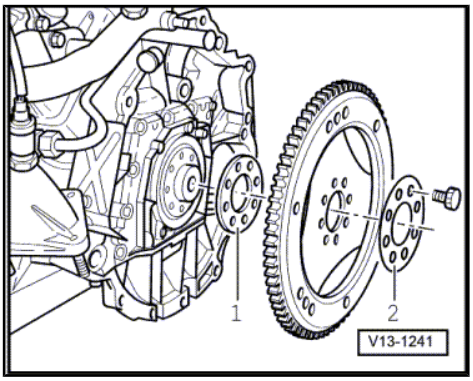

Tightening torques

Component	Nm
Drive plate to crankshaft	30 + 90° 6)
Screw plug in top part of sump	35
Oil filler neck to cylinder head	10

6) 90° corresponds to a quarter turn.

3 Removing and installing crankshaft

3.1 Exploded view of crankshaft

Note

For performing assembly work, attach engine with engine and gearbox holder -VW 540- and supplementary set for engine and gearbox holder -VW 540/1 B- to repair stand ⇒ page 26 .

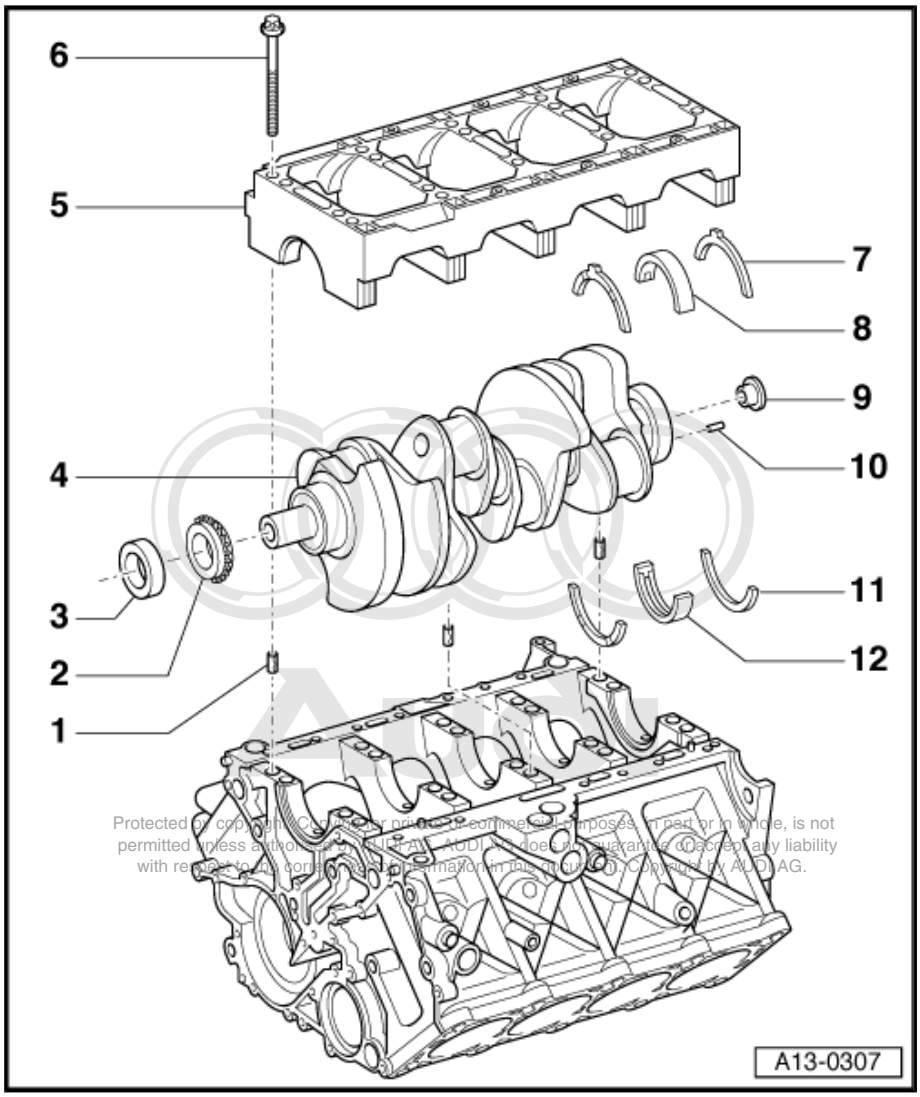

1 - Dowel sleeve
- ❑ 3x
- ❑ Insert in cylinder block

2 - Chain sprocket
- ❑ Installation position: Labelled side facing forwards
- ❑ Removing and installing ⇒ "1.3 Removing and installing chain drive for oil pump", page 145

3 - Thrust washer
- ❑ Detach if scored and turn or replace ⇒ page 64
- ❑ Detach from crankshaft by hand

4 - Crankshaft
- ❑ Measuring axial clearance ⇒ page 74
- ❑ Measuring radial clearance ⇒ page 74
- ❑ Do not turn crankshaft when measuring radial clearance
- ❑ Crankshaft dimensions ⇒ page 73

5 - Bearing frame
- ❑ Slacken off bolts in reverse tightening sequence
- ❑ Tightening sequence ⇒ page 73

6 - Bolt
- ❑ For bearing frame
- ❑ Replace
- ❑ Slacken off in reverse tightening sequence
- ❑ Tightening sequence and tightening torque ⇒ page 73

7 - Thrust washer
- ❑ At 5th crankshaft bearing only
- ❑ Oil grooves face outwards
- ❑ Pay attention to retainer

- ❑ Measuring axial clearance ⇒ page 74

8 - Bearing shell

- ❑ For bearing frame with no oil groove
- ❑ Do not interchange used bearing shells (mark)
- ❑ Bearing shells worn down to the nickel layer must be replaced

9 - Mounting bush

- ❑ For torque converter
- ❑ Must have been inserted in crankshaft; insert if necessary ⇒ page 73

10 - Fitted pin

- ❑ Ensure firm attachment in crankshaft

11 - Thrust washer

- ❑ At 5th crankshaft bearing only
- ❑ Oil grooves face outwards
- ❑ Measuring axial clearance ⇒ page 74

12 - Bearing shell

- ❑ For cylinder block with oil groove
- ❑ Do not interchange used bearing shells (mark)
- ❑ Bearing shells worn down to the nickel layer must be replaced

Protected by copyright. Copying for private or commercial purposes, in part or in whole, is not permitted unless authorised by AUDI AG. AUDI AG does not guarantee or accept any liability with respect to the correctness of information in this document. Copyright by AUDI AG.

Installing bearing frame

– Replace bolts -1 … 20-.

– Insert the 3 dowel sleeves in the ladder frame.

– Tighten bearing frame bolts in the following order:

1. Use torque wrench to tighten bolts -1 … 20- to 30 Nm.
2. Use torque wrench to tighten bolts -1 … 20- to 50 Nm.
3. Use fixed wrench to give bolts -1 … 20- a further 90° ($^1/_4$) turn.

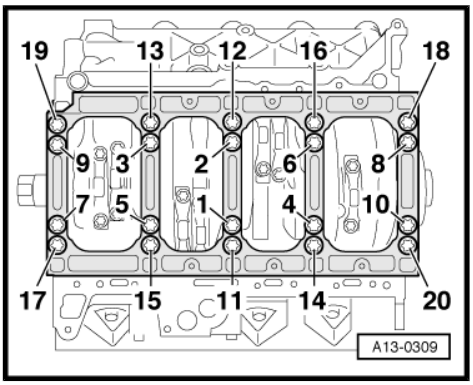

Mounting bush for torque converter

Note

With short and reconditioned engines, as well as new and reconditioned crankshafts, check whether bush -arrow- for torque converter has been inserted in crankshaft.

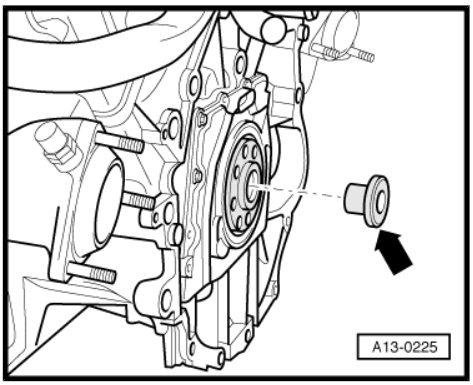

3.2 Crankshaft dimensions

Grinding dimension in mm	Crankshaft bearing journal 1 ⌀	Crankshaft bearing journal 2 ... 5 ⌀	Crankshaft conrod journal ⌀
Basic dimension	64,99 – 0,022 – 0,042	65,00 – 0,022 – 0,042	58,00 – 0,022 – 0,042

3.3 Measuring crankshaft axial clearance

Special tools and workshop equipment required

- Universal dial gauge holder -VW 387-

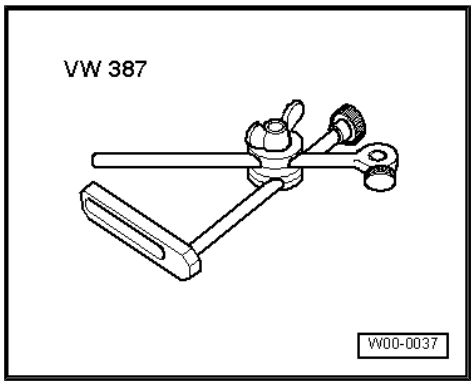

- Dial gauge -VAS 6079-

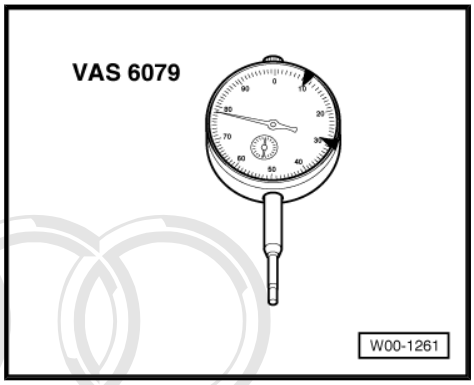

Sequence of operations

– Screw on dial gauge with universal dial gauge holder -VW 387- at cylinder block and position against crank web.

– Press crankshaft by hand towards dial gauge and set dial gauge to “0”.

– Press crankshaft away from dial gauge and take reading:

• As-new axial clearance: 0.090 … 0.251 mm

• Axial clearance wear limit: 0.280 mm

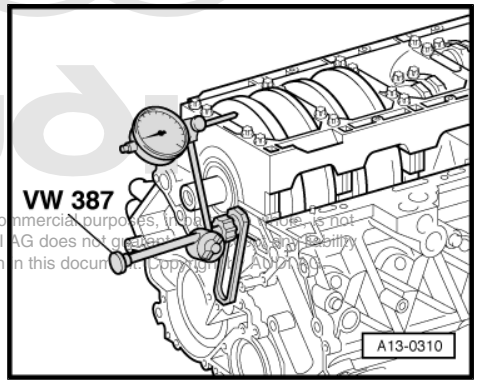

Protected by copyright. Copying for private or commercial purposes, in part or in whole, is not permitted unless authorised by AUDI AG. AUDI AG does not guarantee or assume any liability with respect to the correctness of information in this document. Copyright by AUDI AG.

3.4 Measuring crankshaft radial clearance

Special tools and workshop equipment required

- Plastigage

Sequence of operations

Note

- *Do not interchange used bearings.*
- *Bearing shells worn down to the nickel layer must be replaced.*

– Remove bearing frame and clean bearing journals.

– Place Plastigage thread corresponding to bearing width on journal or in bearing shells.

- Plastigage thread must come to rest in centre of bearing shell.

– Fit ladder-type frame and tighten to 30 Nm. Do not turn crankshaft.

– Remove ladder-type frame again.

– Compare width of Plastigage thread to measurement scale:

- As-new radial clearance: 0.018 … 0.045 mm
- Radial clearance wear limit: 0.10 mm

Protected by copyright. Copying for private or commercial purposes, in part or in whole, is not permitted unless authorised by AUDI AG. AUDI AG does not guarantee or accept any liability with respect to the correctness of information in this document. Copyright by AUDI AG.

4 Dismantling and assembling pistons and conrods

4.1 Exploded view of pistons and conrods

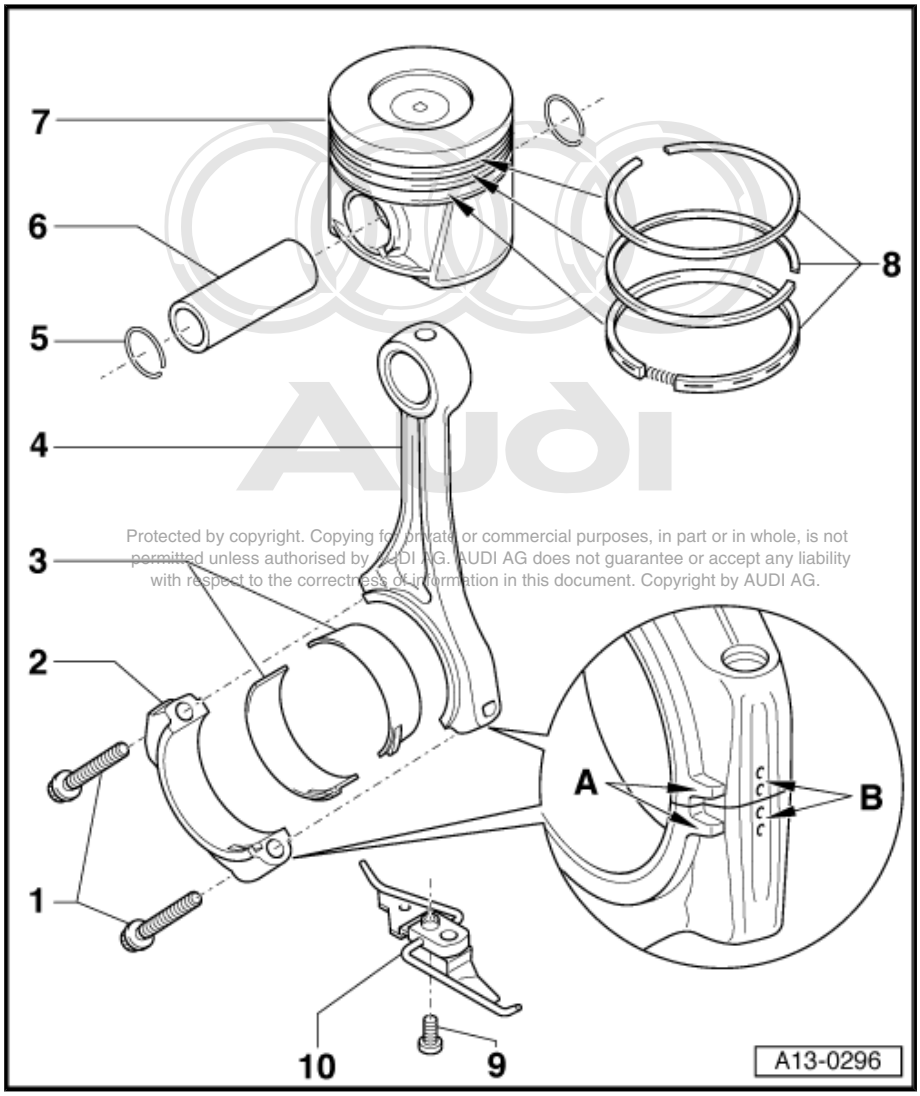

Protected by copyright. Copying for private or commercial purposes, in part or in whole, is not permitted unless authorised by AUDI AG. AUDI AG does not guarantee or accept any liability with respect to the correctness of information in this document. Copyright by AUDI AG.

1 - 40 Nm + further 90° (1/4) turn

- ❑ Replace
- ❑ Lubricate thread and resting surface
- ❑ Tighten to 40 Nm for measuring radial clearance but do not give further turn

2 - Conrod bearing cap

- ❑ Do not interchange
- ❑ Use coloured pen to mark assignment to cylinder -B- ⇒ page 78
- ❑ Installation position: Heed cast marks -A- ⇒ page 78

3 - Bearing shells

- ❑ Heed installation position
- ❑ Do not interchange used bearing shells (mark, however not on contact surface)
- ❑ Bearing shells worn down to the nickel layer must be replaced
- ❑ Axial clearance for a pair of conrods: as-new 0.20 … 0.44 mm
- ❑ Axial clearance for a pair of conrods: wear limit 0.60 mm
- ❑ Measuring radial clearance ⇒ page 80
- ❑ For measuring radial clearance, tighten bolts -Item 1- to 40 Nm, but do not give further turn

4 - Conrod

- ❑ Only to be replaced as a set
- ❑ Use coloured pen to mark assignment to cylinder -B- ⇒ page 78
- ❑ Installation position: Heed cast marks -A- ⇒ page 78
- ❑ Axial clearance for a pair of conrods: as-new 0.20 … 0.44 mm
- ❑ Axial clearance for a pair of conrods: wear limit 0.60 mm
- ❑ Measuring radial clearance ⇒ page 80

5 - Circlip

6 - Piston pin

- ❑ If stiff, heat piston to approx. 60° C
- ❑ Use mandrel -VW 222 A- for removal and installation

7 - Piston

- ❑ With combustion chamber
- ❑ Mark installation position and assignment to cylinder ⇒ page 78
- ❑ Use chalk or a waterproof felt-tip pen to mark assignment to cylinder at piston crown
- ❑ Replace piston in the event of cracks at piston crown or skirt
- ❑ Install using piston ring clamp
- ❑ Checking piston projection at TDC ⇒ page 79
- ❑ Piston and cylinder dimensions ⇒ page 80
- ❑ Checking cylinder bore ⇒ page 78

8 - Piston rings

- ❑ Offset gap by 120°
- ❑ Use piston ring pliers for removal and installation
- ❑ “TOP” mark or label must face piston crown
- ❑ Checking ring gap ⇒ page 77
- ❑ Checking side clearance ⇒ page 77

9 - Special bolt - 9 Nm

- ❑ Replace

10 - Oil spray jet

- ❑ For piston cooling

Checking piston ring gap

– Insert ring at right angles to cylinder wall from above as far as lower cylinder opening, approx. 15 mm from edge of cylinder. Use piston without rings for insertion.

Piston ring Dimensions in mm	As-new	Wear limit
1. Compression ring	0,20 … 0,35	0,50
2. Compression ring	0,70 … 0,90	1,20
Oil scraper ring	0,25 … 0,50	0,80

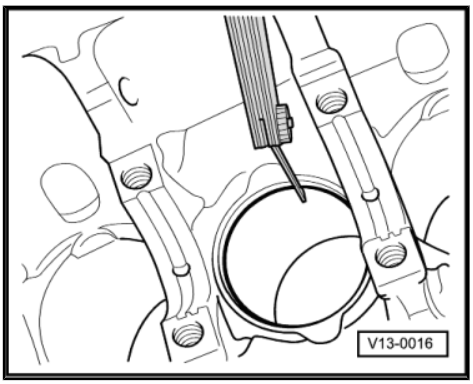

Checking piston ring side clearance

– Clean ring groove of piston before checking.

Piston ring Dimensions in mm	As-new	Wear limit
1. Compression ring [7)]	–	–
2. Compression ring	0,045 … 0,085	0,110
Oil scraper ring	0,025 … 0,065	0,090

7) Compression ring is designed as keystone ring, side clearance cannot be measured.

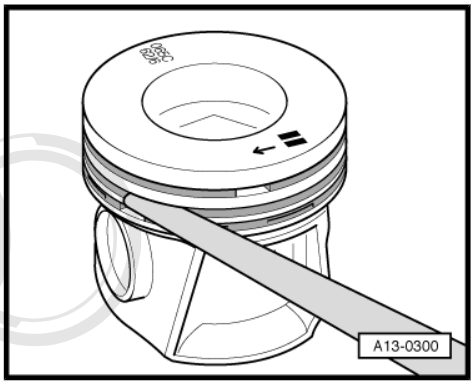

Protected by copyright. Copying for private or commercial purposes, in part or in whole, is not permitted unless authorised by AUDI AG. AUDI AG does not guarantee or accept any liability with respect to the correctness of information in this document. Copyright by AUDI AG.

Checking cylinder bore

– Use 50 … 100 mm inside calipers to measure diagonally at 3 locations in transverse direction -A- and in axial direction -B-.

• Max. deviation from rated dimension: 0.08 mm

Rated dimension ⇒ page 80

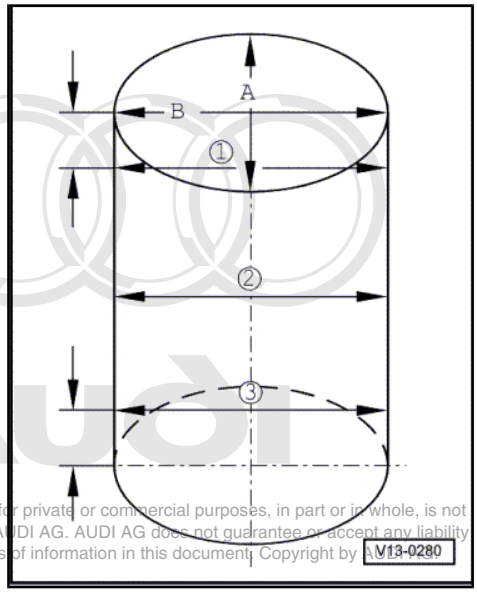

Protected by copyright. Copying for private or commercial purposes, in part or in whole, is not permitted unless authorised by AUDI AG. AUDI AG does not guarantee or accept any liability with respect to the correctness of information in this document. Copyright by AUDI AG.

Piston installation position and piston/cylinder assignment

• Installation position: Arrows on piston crowns must face in direction of travel -arrow-.

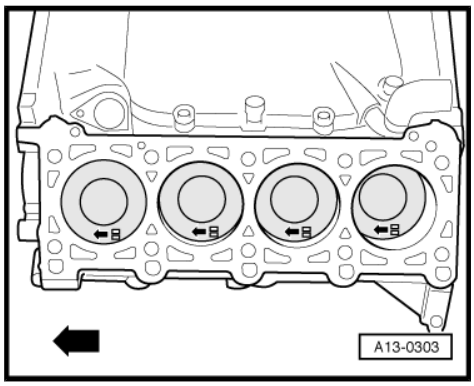

Note

♦ *For re-installing old pistons, use chalk or a waterproof felt-tip pen to mark installation position and assignment to cylinder at piston crown.*

♦ *Do not use centre punch or scriber, as this would damage the coating of the piston crown.*

♦ *Piston identification* ⇒ page 80 *.*

Marking conrods

– Prior to removal, use a coloured pen to mark mutual assignment of conrod and conrod bearing cap -arrows-.

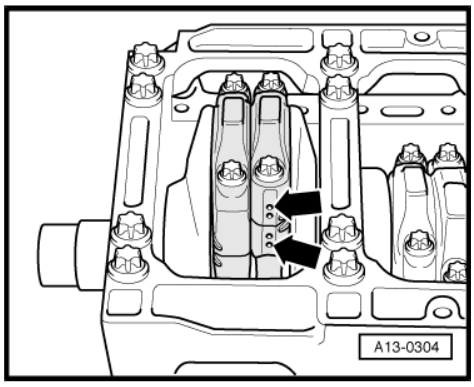

Note

♦ *Conrods are only to be replaced as a set*

♦ *Do not interchange conrod bearings.*

Conrod installation position

The conrod cast marks -arrows- (mark “A” ⇒ page 76) should be positioned as shown.

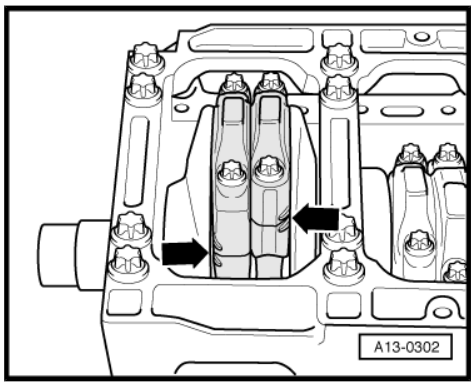

Note

Illustration shows front conrod pair.

4.2 Checking piston projection at TDC

Special tools and workshop equipment required

- -VW 382/7- from measuring device -VW 382-
- -VW 385/17- from universal measuring device -VW 385-
- Dial gauge -VAS 6079-

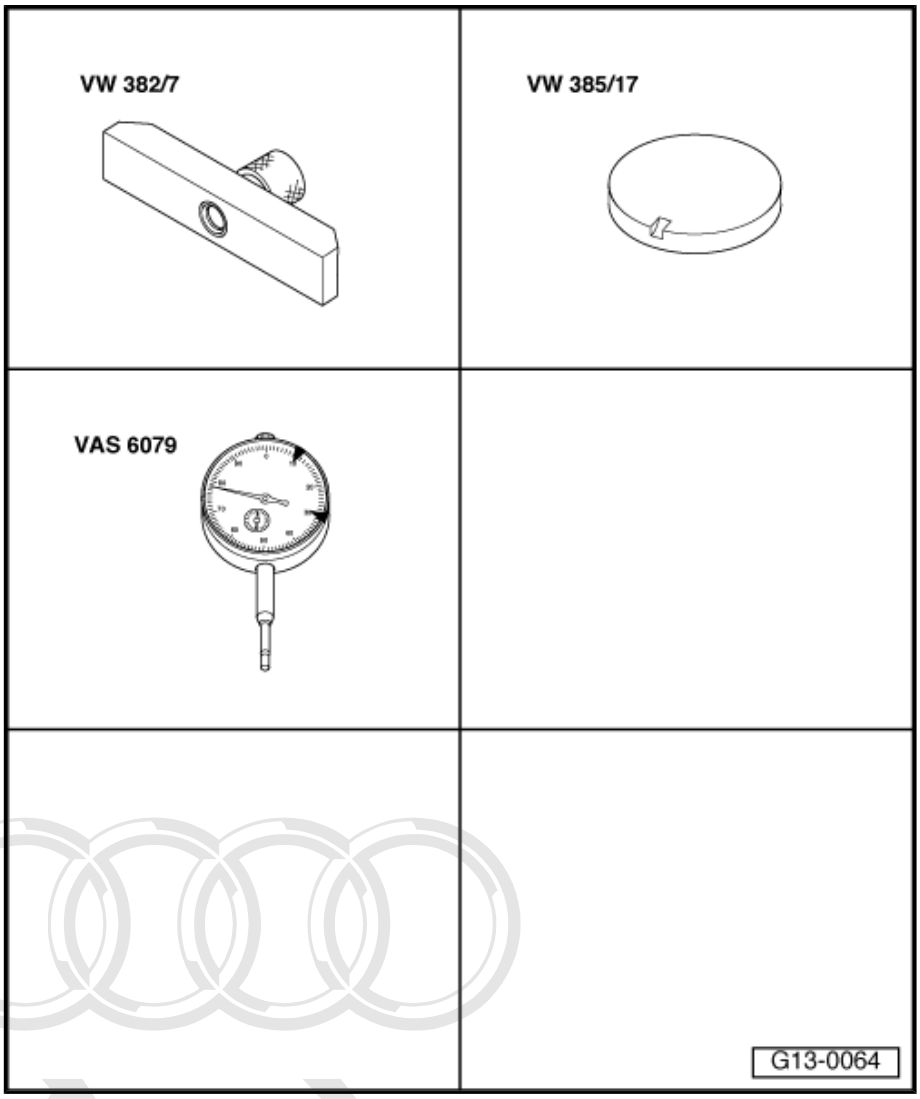

Note

- *The piston projection at TDC is to be checked when installing new pistons or a short engine. Depending on piston projection, fit the corresponding cylinder head gasket on the basis of the following table.*
- *If different values are found when measuring the piston projection, the highest value is applicable for gasket assignment.*
- *The cylinder head gasket must be determined separately for each cylinder bank.*

Protected by copyright. Copying for private or commercial purposes, in part or in whole, is not permitted unless authorised by AUDI AG. AUDI AG does not guarantee or accept any liability with respect to the correctness of information in this document. Copyright by AUDI AG.

Test sequence

– Set up dial gauge -VAS 6079- with -VW 382/7- and -VW 385/17- .

– Measure projection for each piston at two locations -1-.

Piston projection over top edge of cylinder block	Identification Holes
0.39 … 0.49 mm	1
0.49 … 0.54 mm	2
0.54 … 0.65 mm	3

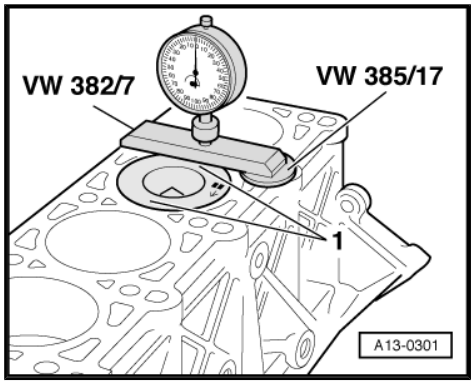

Identification of cylinder head gasket

-Arrow 1-: Holes

-Arrow 2-: Part no.

-Arrow 3-: Cylinder bank identification (L = left, R = right)

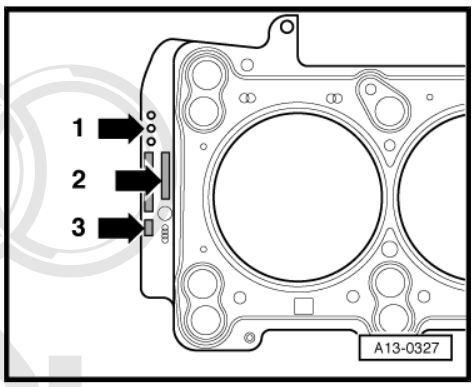

Note

The gaskets for the left and right cylinder head are differently shaped to prevent interchange.

4.3 Piston and cylinder dimensions

Piston identification

Protected by copyright. Copying for private or commercial purposes, in part or in whole, is not permitted unless authorised by AUDI AG. AUDI AG does not guarantee or assume any liability for the accuracy of the information in this document. Copyright by AUDI AG.

♦ The piston identification -arrow- is stamped on the piston crown.

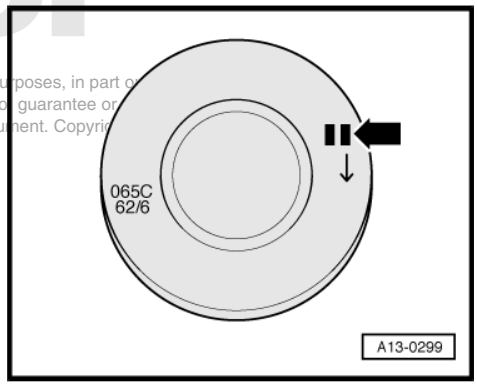

Piston identification		Piston ∅ mm [8]	Cylinder bore ∅ mm
Basic dimension	I	78,253 … 78,261	78,306 … 78,310
	II	78,259 … 78,267	78,310 … 78,314
Intermediate stage	I	78,293 … 78,301	78,346 … 78,350
	II	78,299 … 78,307	78,350 … 78,354

8) Dimensions without graphite coating (thickness 0.02 mm). Graphite coating at piston skirt is subject to wear.

4.4 Checking radial clearance of conrods

Special tools and workshop equipment required

♦ Plastigage

Note

♦ *Do not interchange used bearings.*

♦ *Bearing shells worn down to the nickel layer must be replaced.*

Test sequence

– Remove conrod bearing caps.

– Clean bearing caps and bearing journals.

– Place Plastigage thread corresponding to bearing width on journal or in bearing shells.

– Fit conrod bearing caps and tighten to 40 Nm. Do not turn crankshaft.
– Remove conrod bearing caps again.
– Compare width of Plastigage thread to measurement scale:
• As-new radial clearance: 0.030 … 0.079 mm
• Radial clearance wear limit: 0.120 mm
– Replace bolts for conrod bearings.

Protected by copyright. Copying for private or commercial purposes, in part or in whole, is not permitted unless authorised by AUDI AG. AUDI AG does not guarantee or accept any liability with respect to the correctness of information in this document. Copyright by AUDI AG.

15 – Cylinder head, valve gear

1 Removing and installing cylinder head

1.1 Exploded view of cylinder head cover

Note

The illustration shows the cylinder head cover for the left cylinder bank.

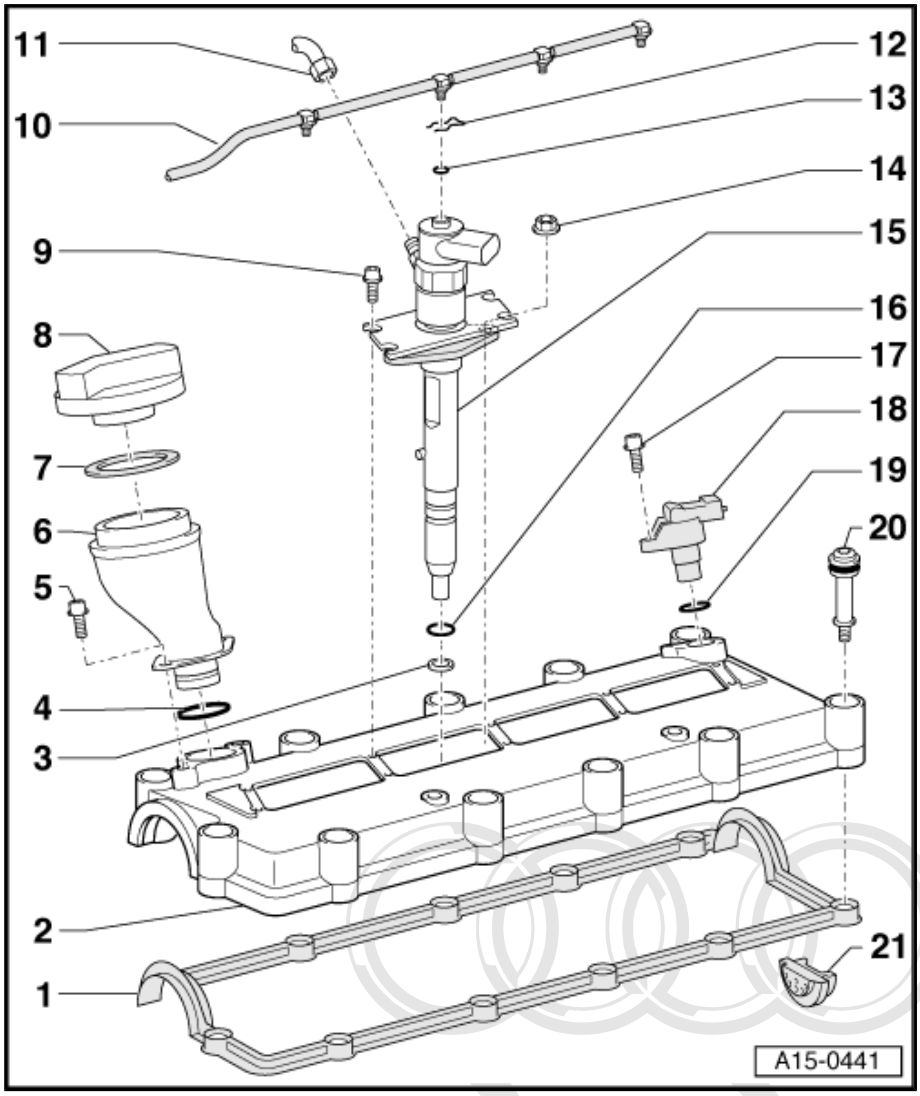

1 - Gasket for cylinder head cover
- ❑ Replace if damaged or leaking
- ❑ Before fitting, apply sealant to transitions of outer bearing caps ⇒ page 83

2 - Cylinder head cover
- ❑ Removing and installing: Left ⇒ page 84 , right ⇒ page 91

3 - Copper seal
- ❑ Replace

4 - O-ring
- ❑ Replace

5 - 10 Nm

6 - Oil filler neck

7 - Gasket
- ❑ Replace if damaged or leaking

8 - Cap

9 - 5 Nm
- ❑ Replace

10 - Return pipe

11 - Injector pipe
- ❑ Tighten to 25 Nm
- ❑ Provide support for connections at injectors when unfastening and tightening union nuts for injector pipes.
- ❑ Do not alter shape

12 - Retaining clip
- ❑ For return pipe

13 - O-ring
- ❑ Only available in conjunction with connection

Protected by copyright. Copying for private or commercial purposes, in part or in whole, is not permitted unless authorised by AUDI AG. AUDI AG does not guarantee or accept any liability with respect to the correctness of information in this document. Copyright by AUDI AG.

- ❑ Replace

14 - 10 Nm

15 - Injector

- ❑ Removing and installing ⇒ Rep. Gr. 23

16 - O-ring

- ❑ Replace
- ❑ Heed installation position: Insert in upper groove of injector

17 - 10 Nm

18 - Hall sender -G40-

- ❑ Checking ⇒ Rep. Gr. 23

19 - O-ring

- ❑ Replace

20 - 10 Nm

- ❑ Replace if damaged or leaking

21 - Half-round gasket

- ❑ Replace if damaged or leaking
- ❑ Installation position: Part no. legible from exterior; straight sealing surface on a level with sealing surface of cylinder head

Sealing transitions of outer bearing caps in cylinder head

– Remove residual sealant from sealing surfaces and degrease.

– Insert half-round gasket -1-.

• Installation position: Part no. legible from exterior; straight sealing surface on a level with sealing surface of cylinder head

– Apply ∅ approx. 3 mm sealant bead to half-round gasket such that it projects approx. 5 mm at both ends -right arrow-.

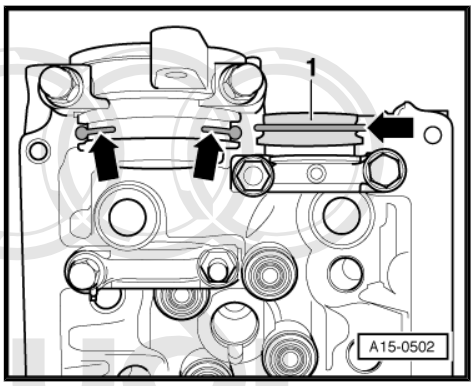

– Apply a droplet of sealant (∅ approx. 5 mm) to all cylinder head/bearing cap transitions; sealant ⇒ Parts catalogue .

– Apply ∅ approx. 3 mm sealant bead to roughly half way up the bearing caps -arrows-.

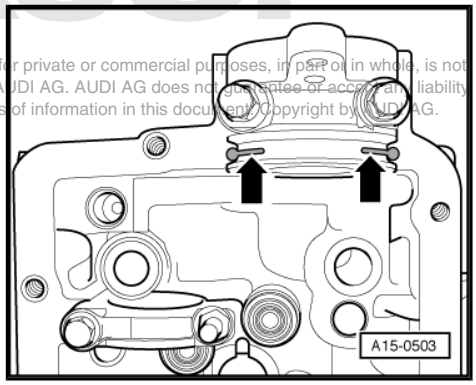

Protected by copyright. Copying for private or commercial purposes, in part or in whole, is not permitted unless authorised by AUDI AG. AUDI AG does not guarantee or accept any liability with respect to the correctness of information in this document. Copyright by AUDI AG.

1.2 Removing and installing left cylinder head cover

Special tools and workshop equipment required

- Multi-purpose tool -VW 771-
- 14 mm socket wrench -3150-
- Torque wrench -V.A.G 1331-
- Ratchet -V.A.G 1331/1-
- Open ring spanner attachment -V.A.G 1331/8-
- Puller -T40059-

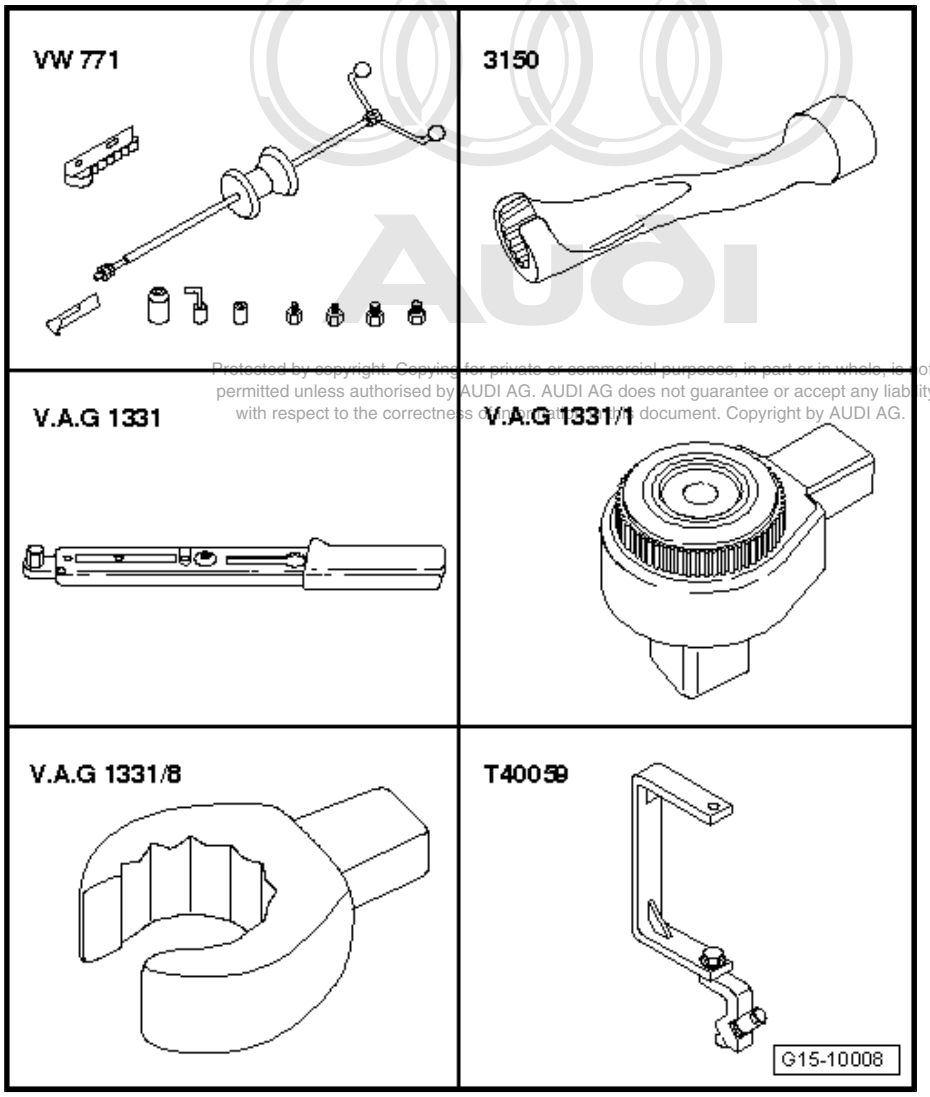

Protected by copyright. Copying for private or commercial purposes, in part or in whole, is not permitted unless authorised by AUDI AG. AUDI AG does not guarantee or accept any liability with respect to the correctness of information in this document. Copyright by AUDI AG.

- Drip tray for workshop cranes -VAS 6208- or -V.A.G 1306-

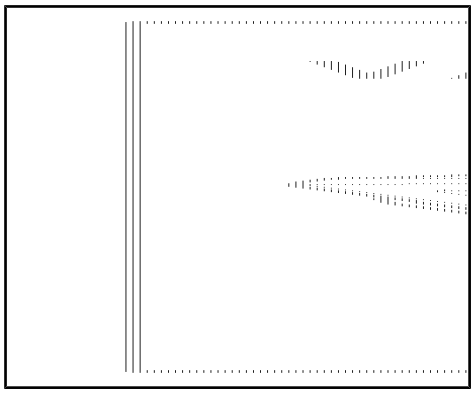

- Sealant ⇒ Parts catalogue

Removing

Note

- *Re-attach all cable ties unfastened or severed on removal at the same location on installation.*
- *Collect drained coolant in a clean container for disposal or re-use.*

Protected by copyright. Copying for private or commercial purposes, in part or in whole, is not permitted unless authorised by AUDI AG. AUDI AG does not guarantee or accept any liability with respect to the correctness of information in this document. Copyright by AUDI AG.

WARNING

Hot vapour/coolant may escape when opening the expansion tank. Cover the cap with a cloth and open carefully.

– Open cap of coolant expansion tank.

– Pull lock carrier forwards ⇒ page 31 .

– Place drip tray for workshop cranes -VAS 6208- or -V.A.G 1306- beneath engine.

– Open drain plugs -2- and -3- and drain off coolant at engine only.

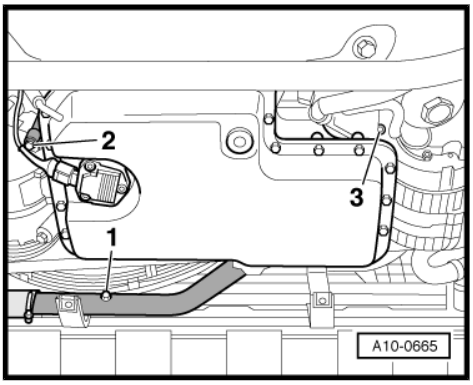

– Detach engine cover -arrows-.

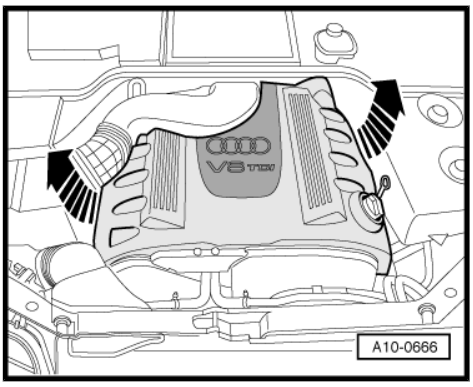

– Remove cover on left in engine compartment -arrows-.

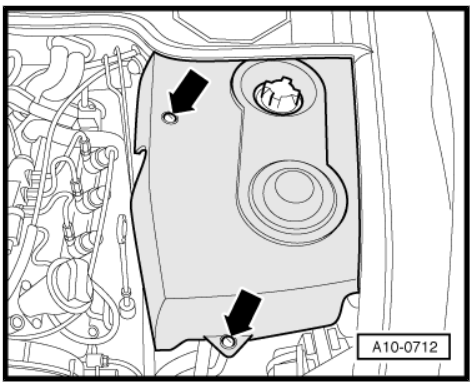

– Detach and lay bare coolant hoses -arrows-.

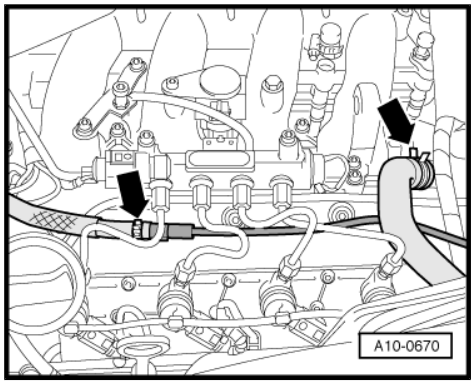

– Unscrew union nut -1- at rail element.
– Unscrew union nuts -4 ... 7-.

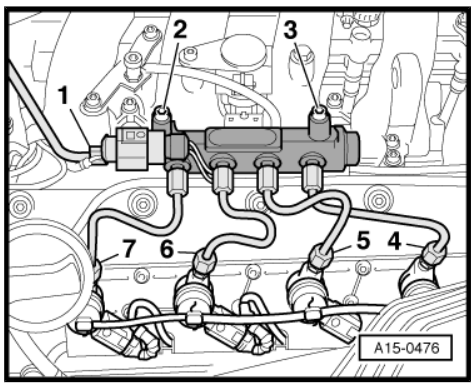

Note

Provide support for connections at injectors when unfastening union nuts for injector pipes.

– Screw out bolts -2- and -3-.
– Set down rail element on intake manifold.

– Unplug connectors -3 ... 7-.
– Detach vacuum hose -1-.
– Unscrew and lay bare wiring harness -arrows-.
– Whilst pressing retaining clips, detach return pipe -2- at injectors.

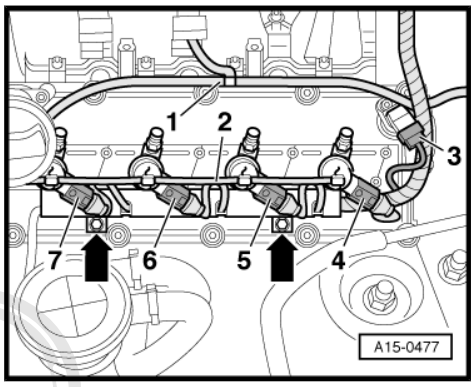

– Unscrew oil filler neck.

Caution

The engine is only to be turned at the crankshaft in the direction of engine rotation (clockwise).

– Crank engine until bolt is visible through recess at camshaft -arrow-.

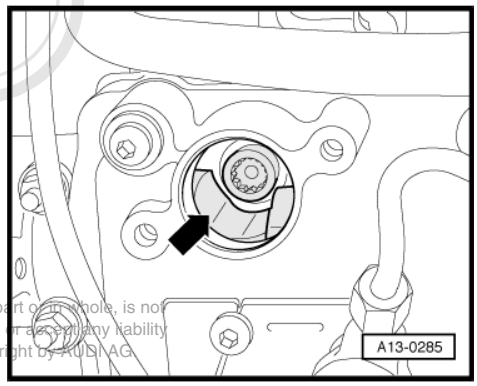

Protected by copyright. Copying for private or commercial purposes, in part or in whole, is not permitted unless authorised by AUDI AG. AUDI AG does not guarantee or accept any liability with respect to the correctness of information in this document. Copyright by AUDI AG

Note

- *The injectors can only be removed in certain camshaft positions.*
- *Crank engine at crankshaft central bolt.*

– Unscrew covers for injectors -arrows-.

– Pull covers upwards and give 1/4 turn (90°).

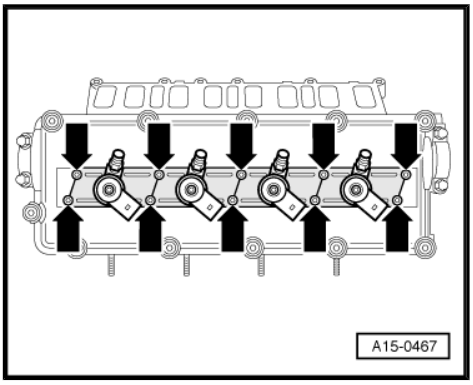

– Unscrew injectors -arrows-.

> **Caution**
>
> - *Mark assignment of injectors to cylinder.*
> - *Used injectors are only to be re-installed at the same cylinder.*

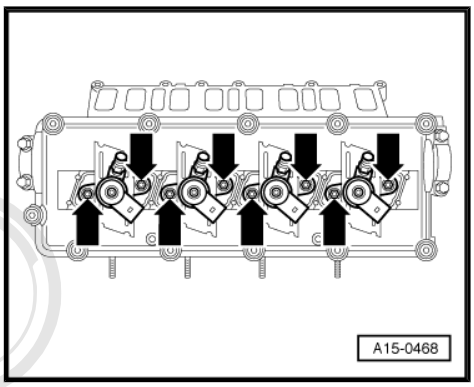

– Pull out injectors for cylinders -6- and -8-.

Note

-Arrow- points in direction of travel.

Protected by copyright. Copying for private or commercial purposes, in part or in whole, is not permitted unless authorised by AUDI AG. AUDI AG does not guarantee or accept any liability with respect to the correctness of information in this document. Copyright by AUDI AG.

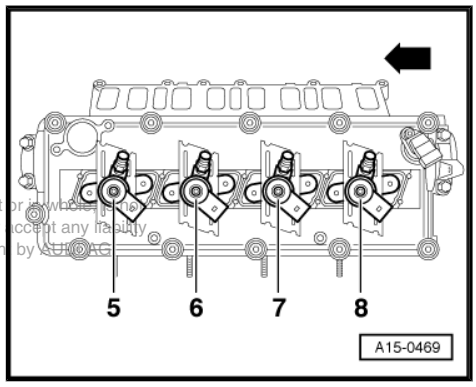

– Screw puller -T40059- -Item 1- onto injector to be removed and knock out injector using multi-purpose tool -VW 771- -Item 2-.

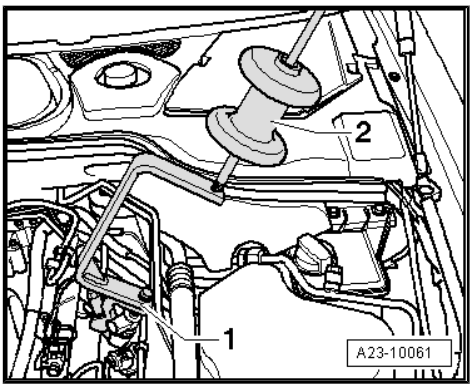

– Give the crankshaft a further 1/2 turn (180°) in clockwise direction.
– Pull out injectors for cylinders -5- and -7-.

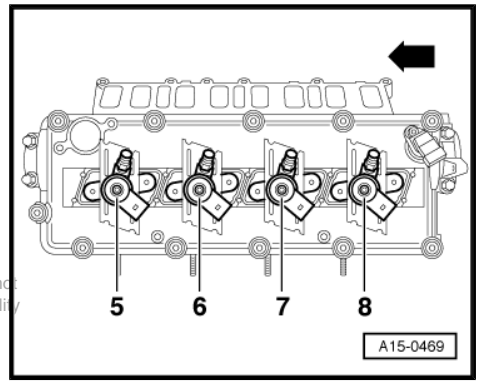

Note

-Arrow- points in direction of travel.

Protected by copyright. Copying for private or commercial purposes, in part or in whole, is not permitted unless authorised by AUDI AG. AUDI AG does not guarantee or accept any liability with respect to the correctness of information in this document. Copyright by AUDI AG.

– Diagonally slacken off bolts -arrows- for cylinder head cover.
– Screw out bolts and detach cylinder head cover.

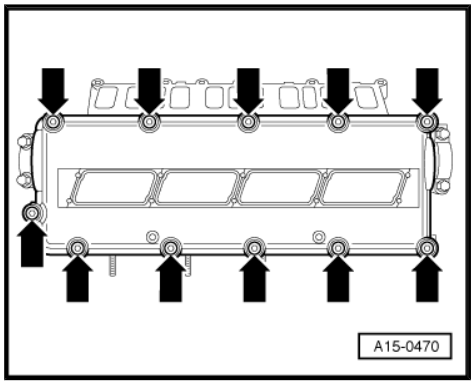

Installing

Install in reverse order; paying attention to the following:

Note

- *Replace gaskets and seals.*
- *Replace gaskets for cylinder head cover if damaged.*
- *Secure all hose connections with standard clamps ⇒ Parts catalogue .*
- *Re-attach all cable ties in the same locations on installation.*

– Remove residual sealant from sealing surfaces and degrease.
– Insert half-round gasket -1-.
• Installation position: Part no. legible from exterior; straight sealing surface on a level with sealing surface of cylinder head
– Apply ∅ approx. 3 mm sealant bead to half-round gasket such that it projects approx. 5 mm at both ends -right arrow-.

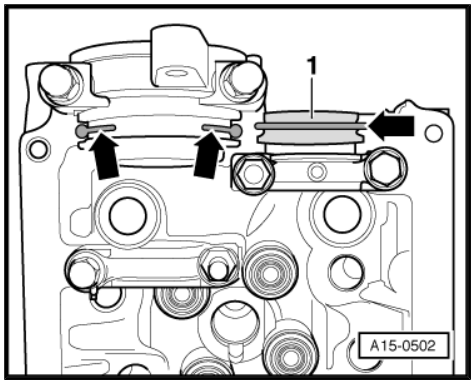

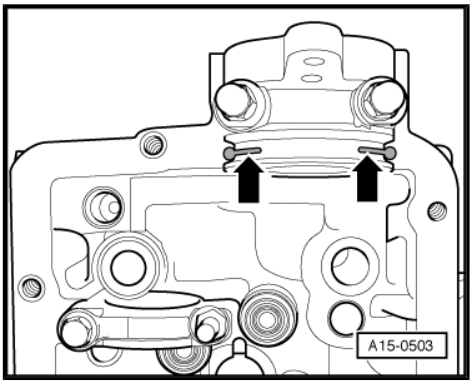

– Apply a droplet of sealant to all cylinder head/bearing cap transitions ⇒ Parts catalogue (∅ approx. 5 mm).
– Apply ∅ approx. 3 mm sealant bead to roughly half way up the bearing caps -arrows-.
– Diagonally tighten cylinder head cover bolts.
– Install injectors ⇒ Rep. Gr. 23 .

Important instructions for installing injectors

- The following components are always to be replaced on removing and installing injectors: “Copper washer”, “O-rings”
- The following components are always to be renewed on replacing injector: “Clamp”, “copper washer”, “O-rings”
- Injectors removed are only to be re-installed at the same cylinder head in the same cylinder.
- Clean working area and tools before working on the injection system.
- On disassembly, immediately seal all open connections with suitable protective caps.
- Do not remove protective caps from any components until immediately prior to installation.
- Before fitting, visually inspect injectors and installation locations. Make sure the injector bores are clean. Wipe out if necessary using a clean cloth, taking care not to cause damage. Do not use sharp objects of any kind.
- Always use new seals and gaskets. Lubricate all gaskets and seals with assembly oil or clean engine oil before installing.
- The old copper seal is to be removed by fixing it loosely in position in a clamping tool and twisting and pulling the injector gently by hand out of the copper seal. Care is to be taken to avoid any damage to the injector.
- High-pressure pipes are never to be bent into shape and must be connected such that there is no strain.
- When working on any part of the high-pressure system, tools may only be used for securing and unfastening pipes. All other assembly and disassembly operations must be performed by hand without the use of any tools.
- Never fit return pipes without retaining clips.
- Press return pipes firmly by hand onto injectors from above until they are heard to engage at each injector. Then press in retaining clip. Pull return pipes upwards to check for firm attachment.
- All cable ties unfastened or severed on removal must be reattached in the same position on installation.

Protected by copyright. Copying for private or commercial purposes, in part or in whole, is not permitted. Unless permitted by law, AUDI AG does not guarantee or accept any liability with respect to the correctness of information in this document. Copyright by AUDI AG.

– Use torque wrench -V.A.G 1331- with open ring spanner attachment -V.A.G 1331/8- for tightening injector pipe.

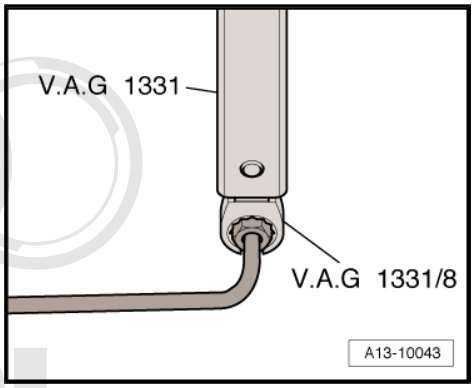

Note

Provide support for connections at injectors when tightening union nuts for injector pipes.

– Alternatively, use can be made of torque wrench -V.A.G 1331- with ratchet -V.A.G 1331/1- and 14 mm socket wrench -3150- .

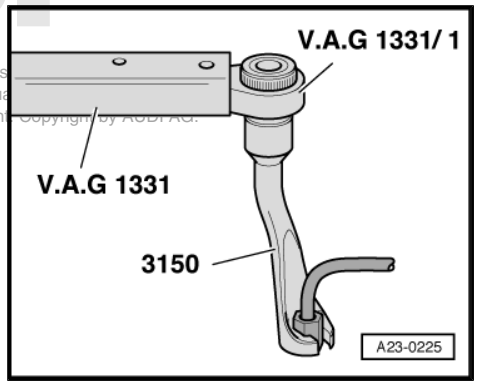

Protected by copyright. Copying for private or commercial purpos
with respect to the correctness of information in this document. Copyright by AUDI AG.

– Install lock carrier with attachments ⇒ General body repairs, exterior; Rep. Gr. 50 .
– Install headlights ⇒ Electrical system; Rep. Gr. 94 .
– Install front bumper ⇒ General body repairs, exterior; Rep. Gr. 63 .
– Check headlight adjustment ⇒ Electrical system; Rep. Gr. 94 .
– Replenish coolant ⇒ page 168 .

Tightening torques

Component	Nm
Cylinder head cover to cylinder head	10
Injector to cylinder head	10
Cover for injector to cylinder head cover	5 [9)]
Oil filler neck to cylinder head	10
Rail element to intake manifold	22
Injector pipes	25
Clamps for air hoses	3,5

9) Replace bolts.

1.3 Removing and installing right cylinder head cover

Special tools and workshop equipment required

- Multi-purpose tool -VW 771-
- 14 mm socket wrench -3150-
- Torque wrench -V.A.G 1331-
- Ratchet -V.A.G 1331/1-
- Open ring spanner attachment -V.A.G 1331/8-
- Puller -T40059-
- Sealant ⇒ Parts catalogue

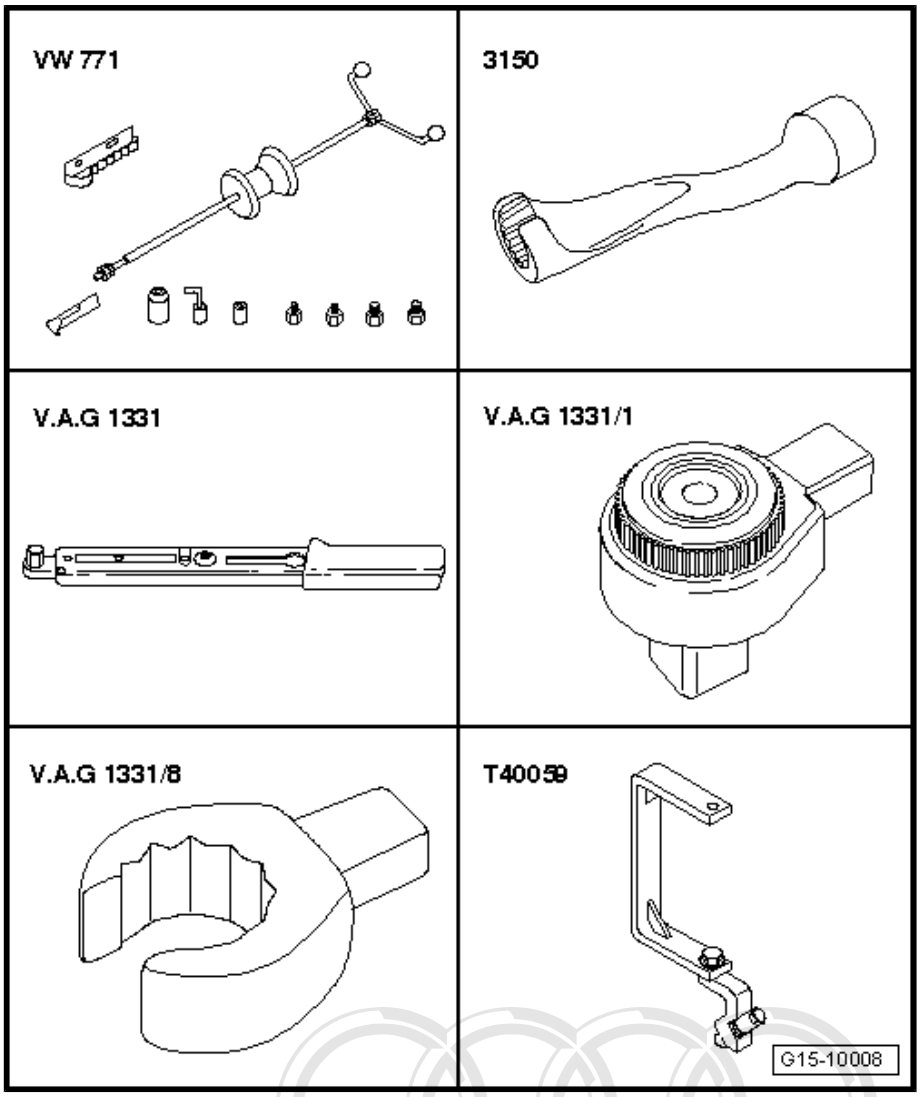

Removing

Note

Re-attach all cable ties unfastened or severed on removal at the same location on installation.

– Pull lock carrier forwards ⇒ page 31 .

– Detach engine cover -arrows-.

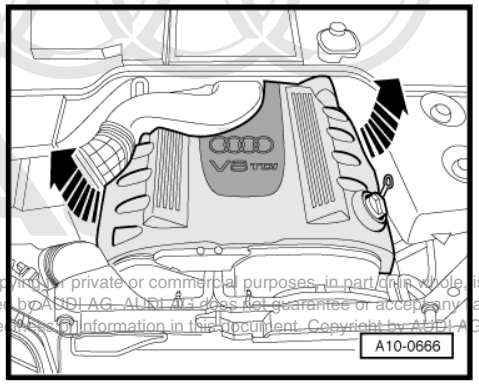

Protected by copyright. Copying for private or commercial purposes, in part or in whole, is not permitted unless authorised by AUDI AG. AUDI AG does not guarantee or accept any liability with respect to the correctness of information in this document. Copyright by AUDI AG.

– Remove cover on right in engine compartment -arrows-.

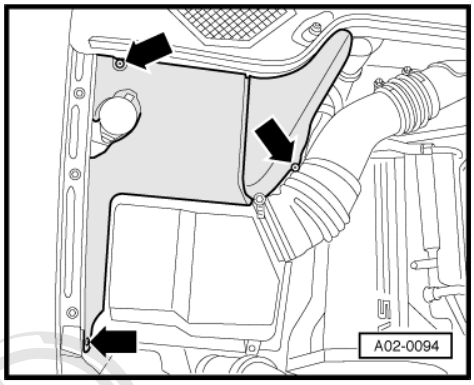

– Unfasten hose clamp -1-.
– Remove air cleaner housing -arrows-.

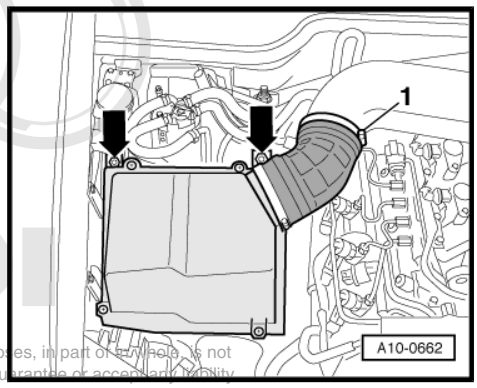

Protected by copyright. Copying for private or commercial purposes, in part or entirely, is not permitted unless authorised by AUDI AG. AUDI AG does not guarantee or accept any liability with respect to the correctness of information in this document. Copyright by AUDI AG.

– Remove top air pipe -arrows-.

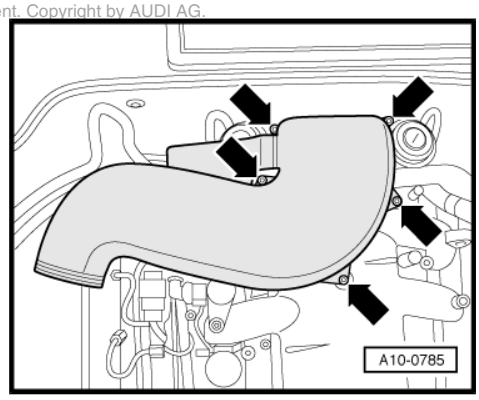

Note

Seal off inlet connections with clean cloths.

– Unscrew union nut -1- at distributor housing.
– Screw out bolts -2- and -3-.

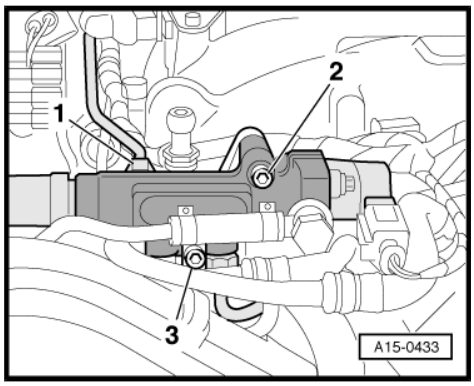

Note

The distributor housing does not have to be completely removed.

– Unplug connectors -1- and -3-.
– Unscrew union nuts -5 ... 8-.

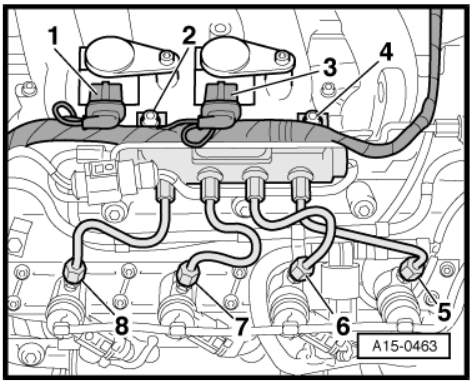

Note

Provide support for connections at injectors when unfastening union nuts for injector pipes.

– Screw out bolts -2- and -4-.
– Unplug connectors from glow plugs.
– Set down rail element on intake manifold.

– Unplug connectors -2 ... 7-.
– Unscrew and lay bare wiring harness -arrows-.
– Whilst pressing retaining clips, detach return pipe -1- at injectors.

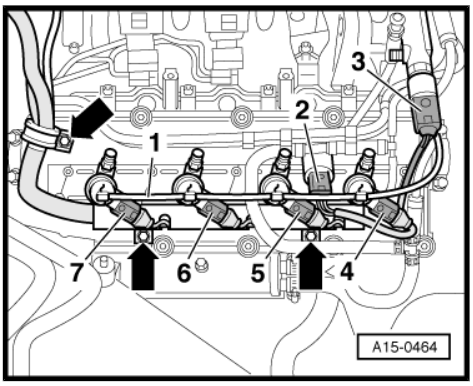

– Disconnect fuel pipe -1- at T-piece.
– Disconnect fuel pipe -2- at fuel pre-supply pump. To do so, press catch and lift off pipe -arrows-.

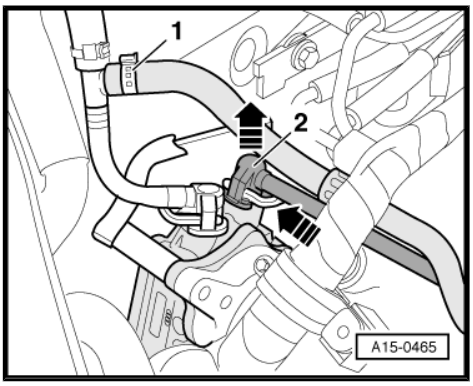

– Disconnect fuel pipes at points marked with -arrows-.
– Set down fuel pipes on intake manifold.

Reproduction of this document or any part thereof for commercial purposes, in part or in whole, is not permitted unless authorised by AUDI AG. AUDI AG does not guarantee or accept any liability with respect to the correctness of information in this document. Copyright by AUDI AG

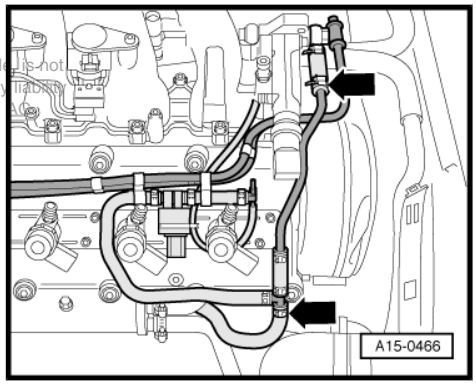

– Unscrew oil filler neck.

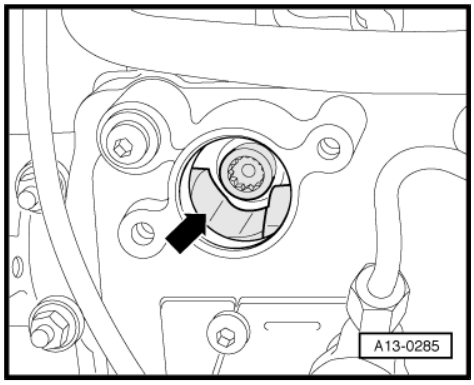

Caution

The engine is only to be turned at the crankshaft in the direction of engine rotation (clockwise).

– Crank engine until bolt is visible through recess at camshaft -arrow-.

Note

- *The injectors can only be removed in certain camshaft positions.*
- *Crank engine at crankshaft central bolt.*

– Unscrew covers for injectors -arrows-.

– Pull covers upwards and give $^{1}/_{4}$ turn (90°).

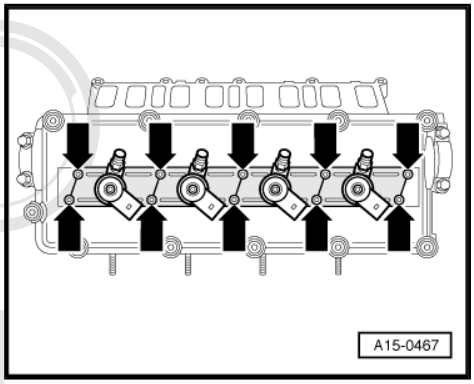

– Unscrew injectors -arrows-.

Protected by copyright. Copying for private or commercial purposes, in part or in whole, is not permitted unless authorised by AUDI AG. AUDI AG does not guarantee or accept any liability with respect to the correctness of information in this document. Copyright by AUDI AG.

Caution

- ***Mark assignment of injectors to cylinder.***
- ***Used injectors are only to be re-installed at the same cylinder.***

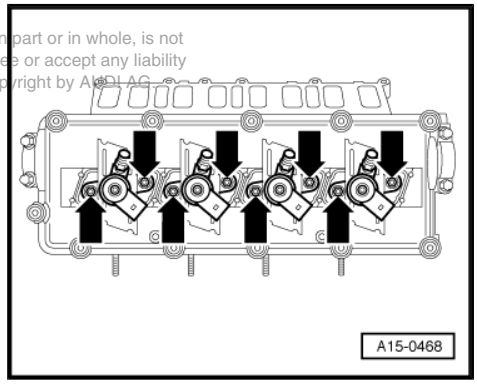

– Pull out injectors for cylinders -1- and -3-.

Note

-Arrow- points in direction of travel.

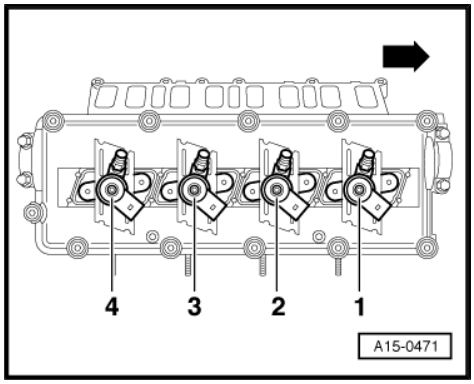

– Screw puller -T40059- -Item 1- onto injector to be removed and knock out injector using multi-purpose tool -VW 771- -Item 2-.

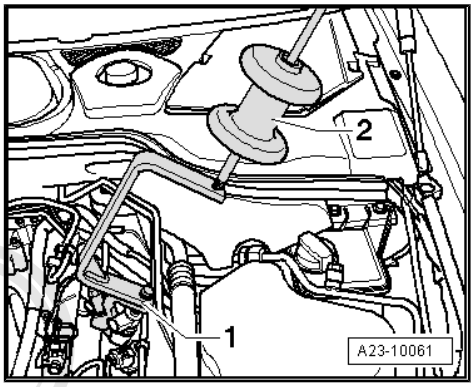

– Give the crankshaft a further 1/2 turn (180°) in clockwise direction.

– Pull out injectors for cylinders -2- and -4-.

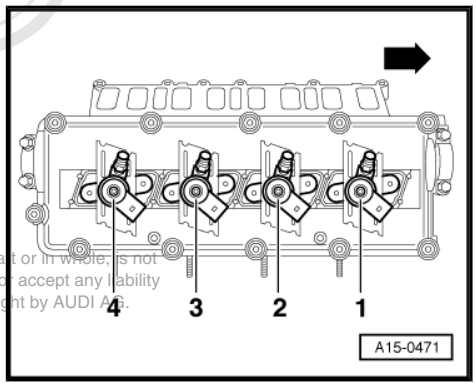

Note

-Arrow- points in direction of travel.

Protected by copyright. Copying for private or commercial purposes, in part or in whole, is not permitted unless authorised by AUDI AG. AUDI AG does not guarantee or accept any liability with respect to the correctness of information in this document. Copyright by AUDI AG.

– Diagonally slacken off bolts -arrows- for cylinder head cover.

– Screw out bolts and detach cylinder head cover.

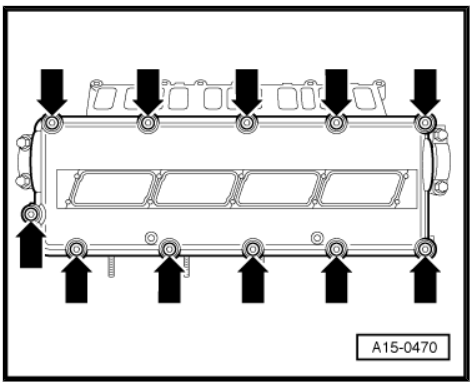

Installing

Install in reverse order; paying attention to the following:

Note

- *Replace gaskets and seals.*
- *Re-attach all cable ties in the same locations on installation.*
- *Secure all hose connections with standard clamps ⇒ Parts catalogue .*
- *Remove and replace copper seals beneath injectors.*
- *Replace gaskets for cylinder head cover if damaged.*

– Remove residual sealant from sealing surfaces and degrease.

– Insert half-round gasket -1-.

• Installation position: Part no. legible from exterior; straight sealing surface on a level with sealing surface of cylinder head

– Apply ∅ approx. 3 mm sealant bead to half-round gasket such that it projects approx. 5 mm at both ends -right arrow-.

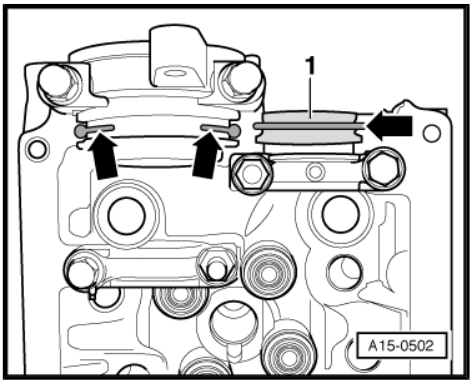

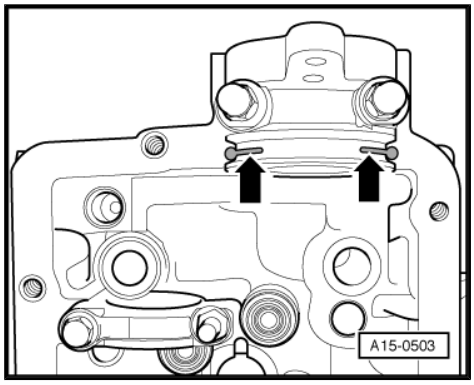

– Apply a droplet of sealant to all cylinder head/bearing cap transitions ⇒ Parts catalogue (∅ approx. 5 mm).
– Apply ∅ approx. 3 mm sealant bead to roughly half way up the bearing caps -arrows-.
– Diagonally tighten cylinder head cover bolts.
– Install injectors ⇒ Rep. Gr. 23 .

Important instructions for installing injectors

- The following components are always to be replaced on removing and installing injectors: “Copper washer”, “O-rings”
- The following components are always to be renewed on replacing injector: “Clamp”, “copper washer”, “O-rings”
- Injectors removed are only to be re-installed at the same cylinder head in the same cylinder.
- Clean working area and tools before working on the injection system.
- On disassembly, immediately seal all open connections with suitable protective caps.
- Do not remove protective caps from any components until immediately prior to installation.
- Before fitting, visually inspect injectors and installation locations. Make sure the injector bores are clean. Wipe out if necessary using a clean cloth, taking care not to cause damage. Do not use sharp objects of any kind.
- Always use new seals and gaskets. Lubricate all gaskets and seals with assembly oil or clean engine oil before installing.
- The old copper seal is to be removed by fixing it loosely in position in a clamping tool and twisting and pulling the injector gently by hand out of the copper seal. Care is to be taken to avoid any damage to the injector.
- High-pressure pipes are never to be bent into shape and must be connected such that there is no strain.
- When working on any part of the high-pressure system, tools may only be used for securing and unfastening pipes. All other assembly and disassembly operations must be performed by hand without the use of any tools.
- Never fit return pipes without retaining clips.
- Press return pipes firmly by hand onto injectors from above until they are heard to engage at each injector. Then press in retaining clip. Pull return pipes upwards to check for firm attachment.
- All cable ties unfastened or severed on removal must be reattached in the same position on installation.

This document is protected by copyright. Reproduction, duplication or translation, in whole or in part, is not permitted without the express consent by AUDI AG. AUDI AG does not accept any liability with respect to the correctness of information in this document. Copyright by AUDI AG.

– Use torque wrench -V.A.G 1331- with open ring spanner attachment -V.A.G 1331/8- for tightening injector pipe.

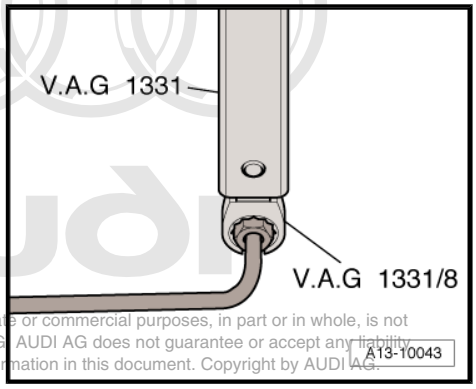

Note

Provide support for connections at injectors when tightening union nuts for injector pipes.

Protected by copyright. Copying for private or commercial purposes, in part or in whole, is not permitted unless authorised by AUDI AG. AUDI AG does not guarantee or accept any liability with respect to the correctness of information in this document. Copyright by AUDI AG.

– Alternatively, use can be made of torque wrench -V.A.G 1331- with ratchet -V.A.G 1331/1- and 14 mm socket wrench -3150- .

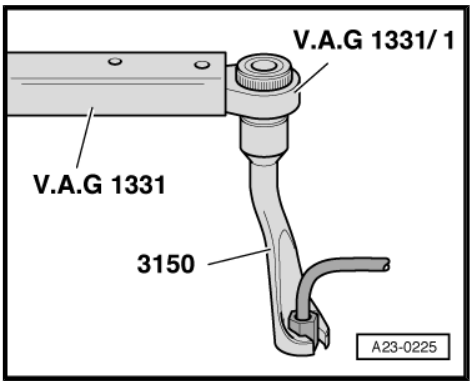

Note

- *Heed the following on assembly: Pull catch outwards and press fuel pipe -2- onto fuel pre-supply pump connection until it engages -arrow-.*
- *If the pipe has been fitted properly, the catch will be loosely positioned in the hose coupling.*
- *-Item 1-, -Item 3- and -Item 4- can be ignored.*

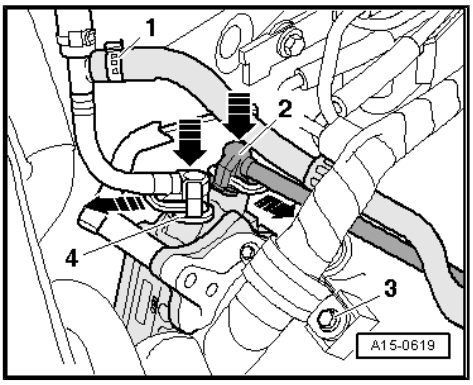

– Install lock carrier with attachments ⇒ General body repairs, exterior; Rep. Gr. 50 .

– Install headlights ⇒ Electrical system; Rep. Gr. 94 .

– Install front bumper ⇒ General body repairs, exterior; Rep. Gr. 63 .

– Check headlight adjustment ⇒ Electrical system; Rep. Gr. 94 .

Tightening torques

Component	Nm
Cylinder head cover to cylinder head	10
Injector to cylinder head	10
Cover for injector to cylinder head cover	5 [10)]
Oil filler neck to cylinder head	10
Rail element to intake manifold	22
Injector pipes	25
Clamps for air hoses	3,5

10) Replace bolts.

1.4 Exploded view of cylinder head

Note

- *The illustration shows the cylinder head for the left cylinder bank.*
- *Removing and installing cylinder head cover ⇒ page 84*

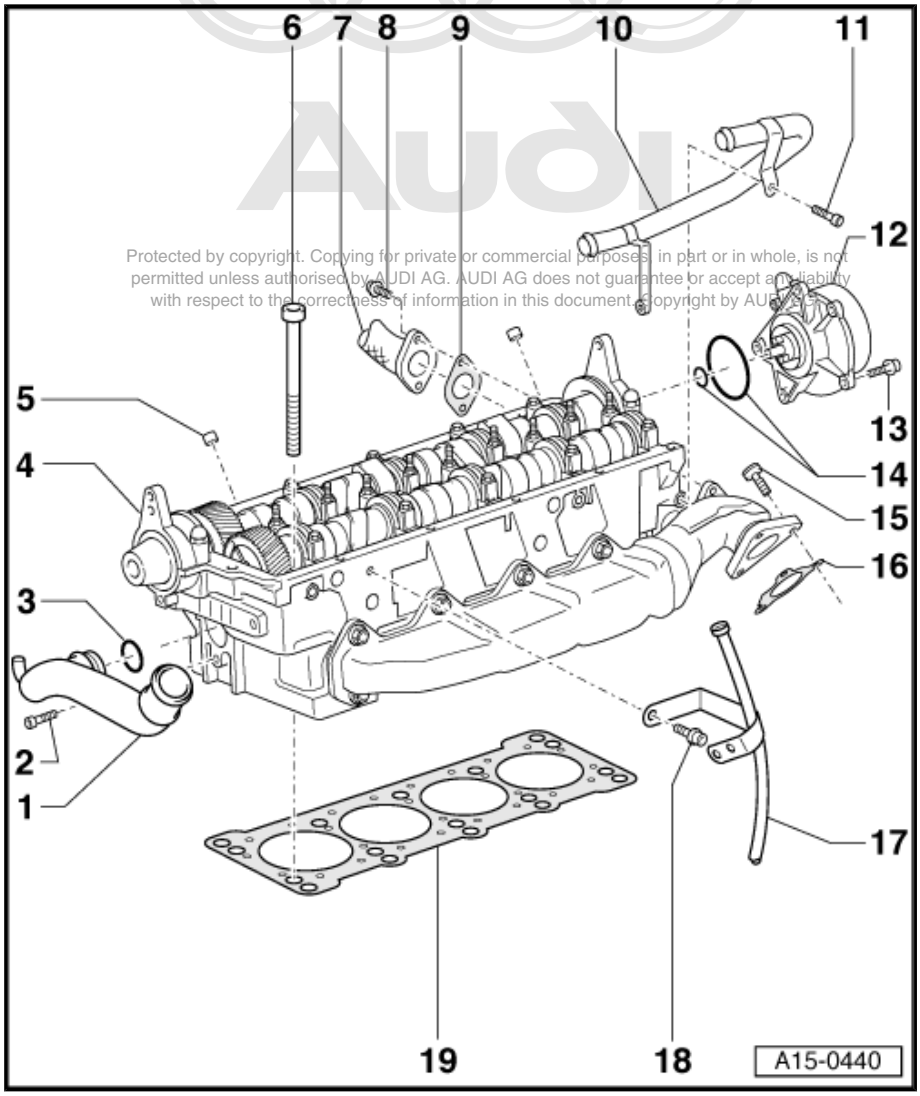

Protected by copyright. Copying for private or commercial purposes, in part or in whole, is not permitted unless authorised by AUDI AG. AUDI AG does not guarantee or accept any liability with respect to the correctness of information in this document. Copyright by AUDI AG.

1 - Front coolant pipe

2 - 10 Nm

3 - O-ring
- ❑ Replace

4 - Cylinder head
- ❑ Removing left cylinder head ⇒ page 103
- ❑ Removing right cylinder head ⇒ page 108
- ❑ Checking for torsion ⇒ page 99
- ❑ To avoid the possibility of glow plug damage, only set down cylinder removed on a foam pad
- ❑ Diesel cylinder heads are not to be reworked
- ❑ Installing ⇒ page 113
- ❑ Fill with fresh coolant following replacement

5 - Dowel sleeve
- ❑ 2x per cylinder head
- ❑ Take care to prevent dowel sleeve dropping into intake ducts

6 - Cylinder head bolt
- ❑ Replace
- ❑ Heed slackening off sequence: Left cylinder head ⇒ page 108 , right cylinder head ⇒ page 112
- ❑ Heed tightening sequence ⇒ page 115

7 - Connecting pipe
- ❑ For exhaust gas recirculation

8 - 10 Nm

9 - Gasket
- ❑ Replace

10 - Pipe
- ❑ For crankcase breather

11 - 10 Nm

12 - Vacuum pump
- ❑ For brake servo

- ❑ Removing and installing ⇒ page 99

13 - 10 Nm

14 - O-rings

- ❑ For vacuum pump
- ❑ Replace

15 - 20 Nm + further 90° (1/4) turn

- ❑ Replace

16 - Gasket

- ❑ Replace

17 - Guide tube for dipstick

18 - 10 Nm

19 - Cylinder head gasket

- ❑ Replacing ⇒ "1.6 Removing left cylinder head ", page 103 or ⇒ "1.7 Removing right cylinder head ", page 108
- ❑ Various thicknesses
- ❑ Heed identification ⇒ page 99
- ❑ Installation position: "Top" mark or part no. must face cylinder head
- ❑ Fill with fresh coolant following replacement

Protected by copyright. Copying for private or commercial purposes, in part or in whole, is not permitted unless authorised by AUDI AG. AUDI AG does not guarantee or accept any liability with respect to the correctness of information in this document. Copyright by AUDI AG.

Checking cylinder head for torsion

– Use bevelled straightedge and feeler gauge to check the cylinder head for torsion at several locations.

• Permissible torsion: Max. 0.1 mm

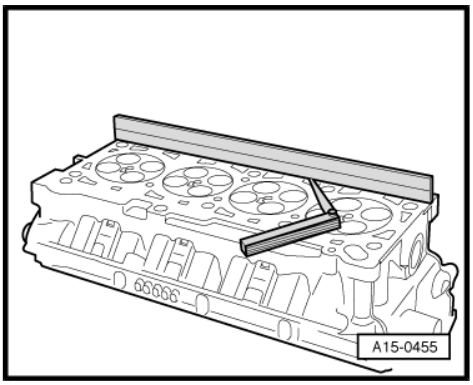

Identification of cylinder head gasket

-Arrow 1-: Holes

-Arrow 2-: Part no.

-Arrow 3-: Cylinder bank identification (L = left, R = right)

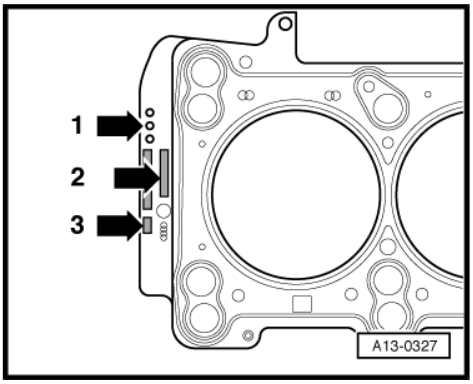

Note

The gaskets for the left and right cylinder head are differently shaped to prevent interchange.

1.5 Removing and installing vacuum pump

Special tools and workshop equipment required

♦ Drip tray for workshop cranes -VAS 6208- or -V.A.G 1306-

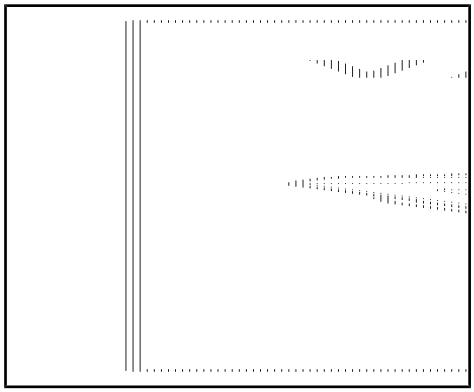

Removing

Note

Re-attach all cable ties unfastened or severed on removal at the same location on installation.

- Engine in position

– Detach engine cover -arrows-.

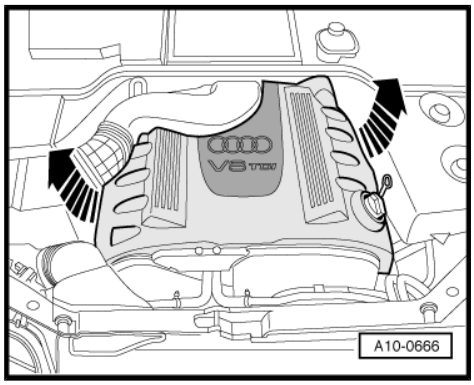

– On vehicles with auxiliary heater, screw out bolts -arrows- for attaching exhaust pipe of auxiliary/supplementary heater to noise insulation.

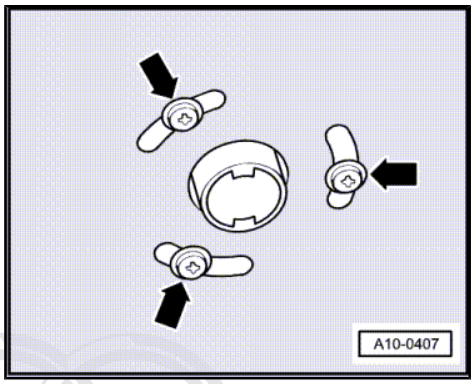

– Unfasten quick-release fasteners -1- and detach front noise insulation.

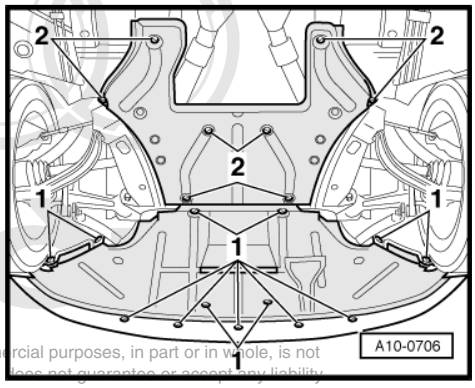

Protected by copyright. Copying for private or commercial purposes, in part or in whole, is not permitted unless authorised by AUDI AG. AUDI AG does not guarantee or accept any liability with respect to the correctness of information in this document. Copyright by AUDI AG.

– Place drip tray for workshop cranes -VAS 6208- or -V.A.G 1306- beneath engine.
– Open drain plugs -2- and -3- and drain off coolant at engine only.

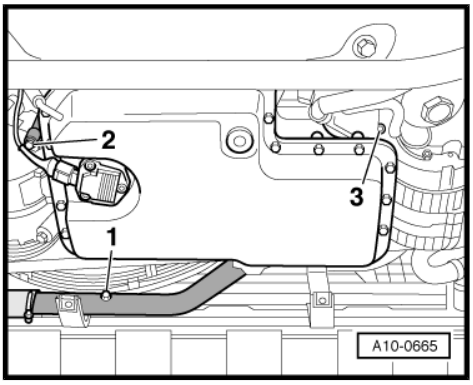

– Slacken off cross-head bolts -1- at electronics box in plenum chamber.
– Unclip plenum chamber cover -2- at front at bulkhead -arrows-.
– Detach right plenum chamber cover.

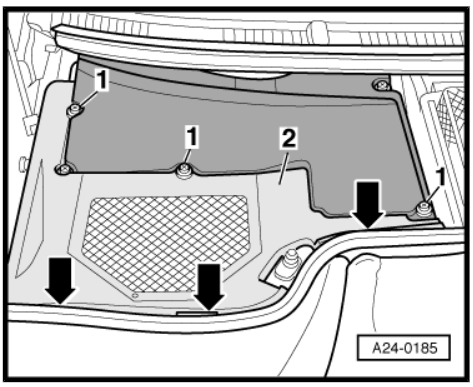

– Detach left plenum chamber cover -arrows-.

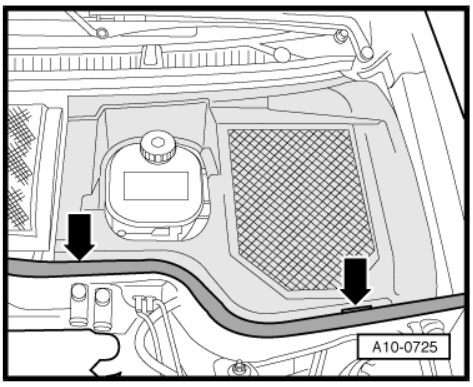

– Unscrew dome brace -2- -arrows-.

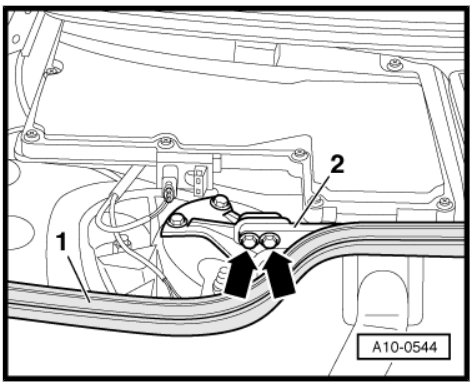

Protected by copyright. Copying for private or commercial purposes, in part or in whole, is not permitted unless authorised by AUDI AG. AUDI AG does not guarantee or accept any liability with respect to the correctness of information in this document. Copyright by AUDI AG.

– Mark position of coolant hoses.
– Detach coolant hoses at breather connections -arrows-.
– Detach breather connections.

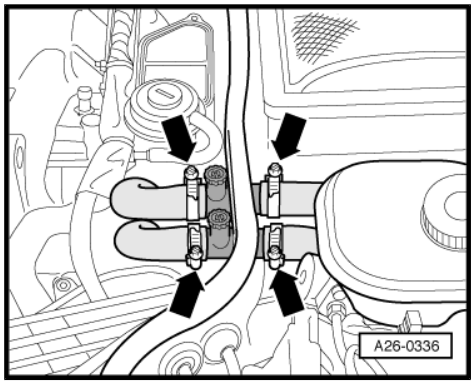

– Detach vacuum hoses -arrows-.
– Lay bare vacuum hoses.

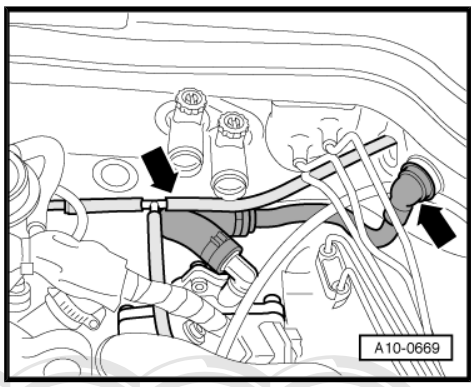

– Screw out bolts -1… 3- of vacuum pump at cylinder head on left and turn pump in -direction of arrow-.
– Detach vacuum pump.

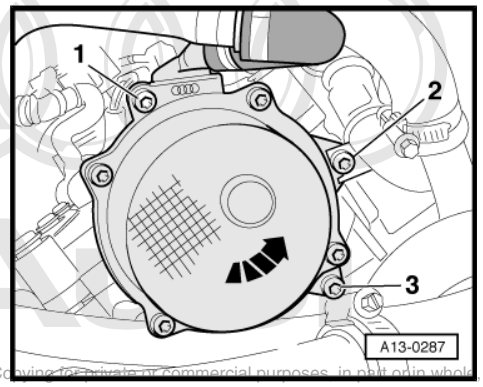

Installing

Install in reverse order; paying attention to the following:

Note

- *Replace gaskets and seals.*
- *Secure all hose connections with standard clamps ⇒ Parts catalogue .*
- *Re-attach all cable ties in the same locations on installation.*

Copyright. Copying for private or commercial purposes, in part or in whole, is not permitted unless authorised by AUDI AG. AUDI AG does not guarantee or accept any liability with respect to the correctness of information in this document. Copyright by AUDI AG.

– Use a mirror to observe current position of grooves -1- and -2- at rear in camshaft.

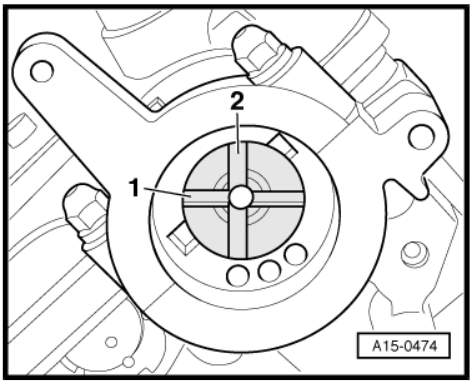

Note

Driver of vacuum pump must engage in symmetrically positioned groove -1- of camshaft.

– Position driver of vacuum pump such that lugs engage in grooves as soon as vacuum pump is first placed in position.

– Repeat procedure if lugs of vacuum pump do not engage when first placed in position.

– Replenish coolant ⇒ page 168 .

Tightening torques

Component	Nm
Vacuum pump to cylinder head	10
Clamps for coolant hoses	2

1.6 Removing left cylinder head

Special tools and workshop equipment required

♦ Multi-purpose tool -VW 771-

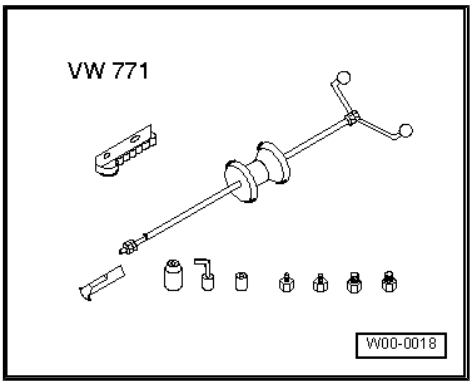

♦ Puller -T40059-

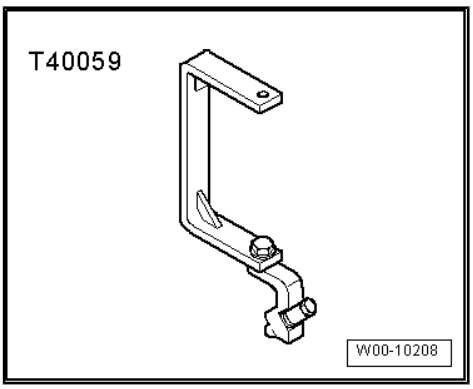

Protected by copyright. Copying for private or commercial purposes, in part or in whole, is not permitted unless authorised by AUDI AG. AUDI AG does not guarantee or accept any liability with respect to the correctness of information in this document. Copyright by AUDI AG.

Sequence of operations

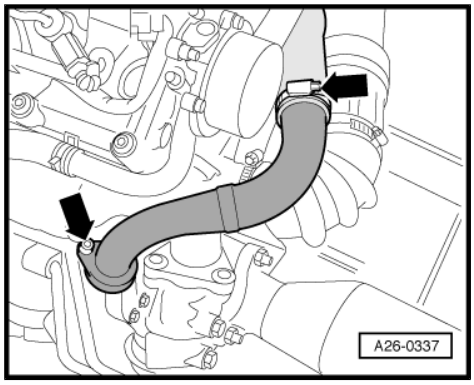

Note

Re-attach all cable ties unfastened or severed on removal at the same location on installation.

– Remove engine ⇒ page 4 .
– Remove intake manifold ⇒ Rep. Gr. 23 .
– Remove left air pipe -arrows-.

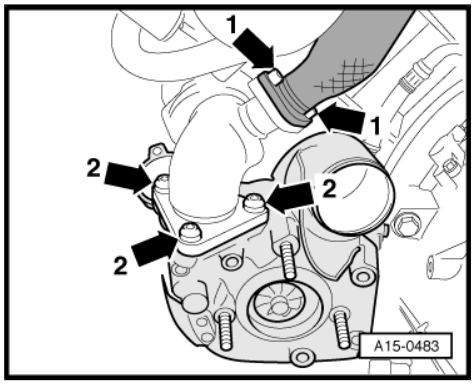

– Remove left connecting pipe for exhaust gas recirculation -arrows 1-.
– Unscrew turbocharger from exhaust manifold -arrows 2-.

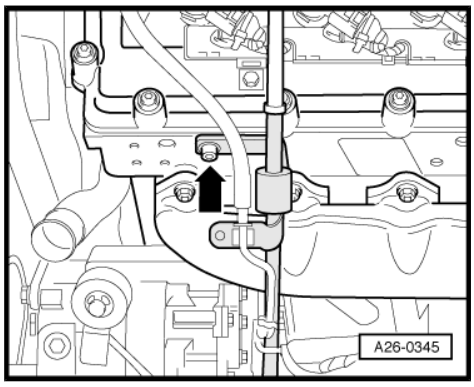

– Unscrew and lift off guide tube for dipstick at cylinder head -arrow-.

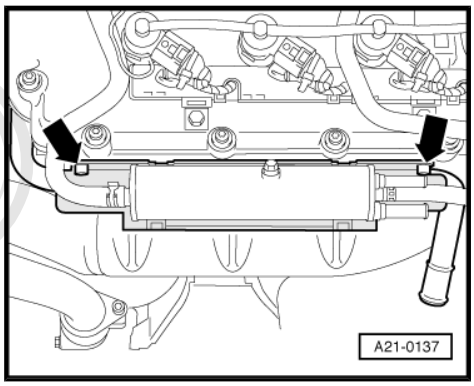

– Screw out bolts -arrows- at fuel cooler.
– Unscrew rear coolant pipe from cylinder block.
– Detach rear coolant pipe.

Protected by copyright. Copying for private or commercial purposes, in part or in whole, is not permitted unless authorised by AUDI AG. AUDI AG does not guarantee or accept any liability with respect to the correctness of information in this document. Copyright by AUDI AG.

– Remove crankcase breather pipe -arrows-.

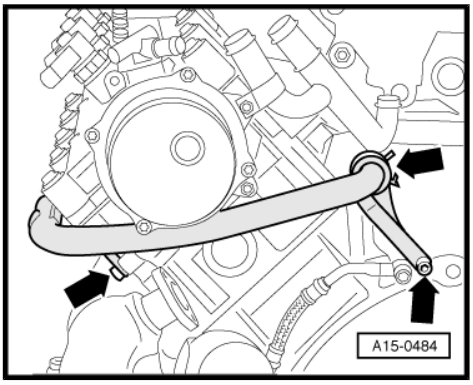

– Unplug connectors -3 ... 7-.
– Detach vacuum hose -1-.
– Unscrew and lay bare wiring harness -arrows-.
– Disconnect return pipe -2- at injectors. To do so, keep retaining clips pressed.

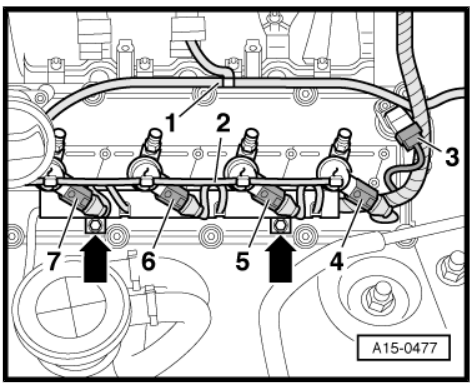

– Unscrew oil filler neck.

Caution

The engine is only to be turned at the crankshaft in the direction of engine rotation (clockwise).

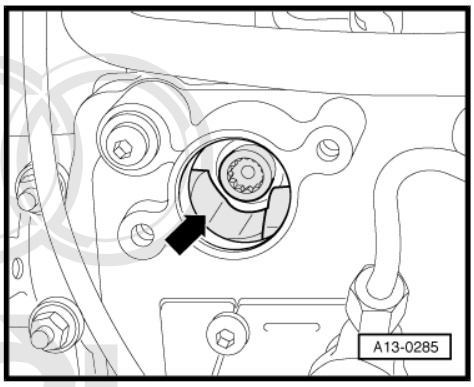

– Crank engine until bolt is visible through recess at camshaft -arrow-.

Note

- *The injectors can only be removed in certain camshaft positions.*
- *Crank engine at crankshaft central bolt.*

Protected by copyright. Copying for private or commercial purposes, in part or in whole, is not permitted unless authorised by AUDI AG. AUDI AG does not guarantee or accept any liability with respect to the correctness of information in this document. Copyright by AUDI AG.

– Unscrew covers for injectors -arrows-.
– Pull covers upwards and give $^1/_4$ turn (90°).

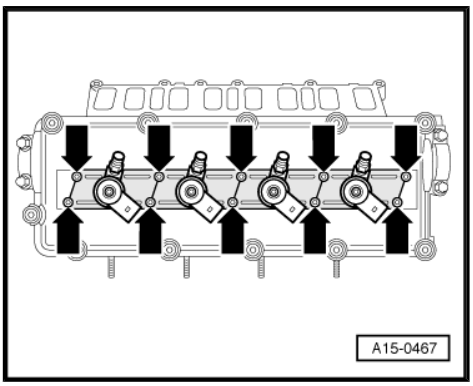

– Unscrew injectors -arrows-.

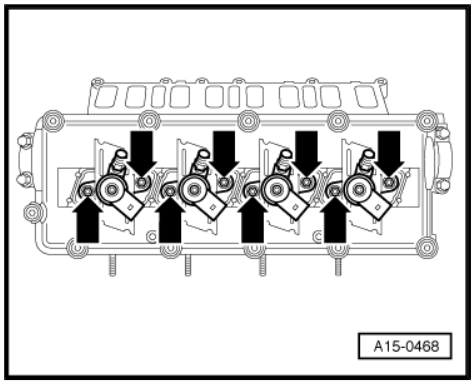

Caution

- *Mark assignment of injectors to cylinder.*
- *Used injectors are only to be re-installed at the same cylinder.*

– Pull out injectors for cylinders -6- and -8-.

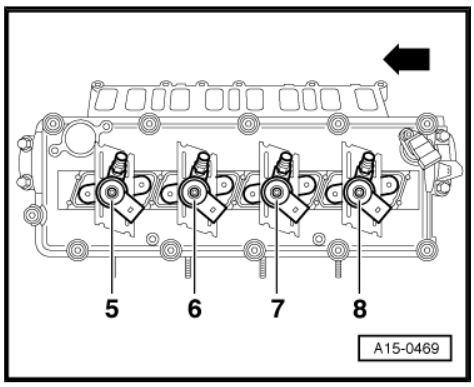

Note

-Arrow- points in direction of travel.

– Screw puller -T40059- -Item 1- onto injector to be removed and knock out injector using multi-purpose tool -VW 771- -Item 2-.

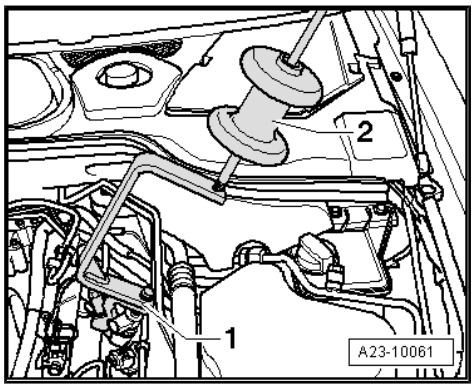

– Give the crankshaft a further 1/2 turn (180°) in clockwise direction.

– Pull out injectors for cylinders -5- and -7-.

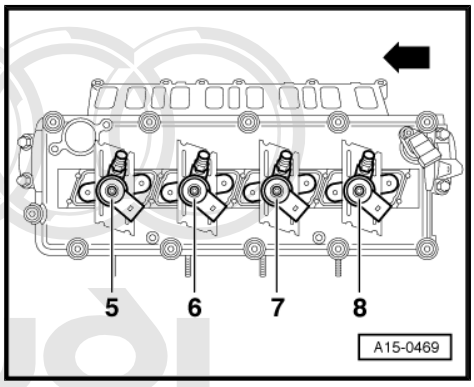

Note

-Arrow- points in direction of travel.

Protected by copyright. Copying for private or commercial purposes, in part or in whole, is not permitted unless authorised by AUDI AG. AUDI AG does not guarantee or accept any liability with respect to the correctness of information in this document. Copyright by AUDI AG.

– Remove toothed belt ⇒ page 51 .
– Screw out bolts -arrows- and detach rear left toothed belt guard.

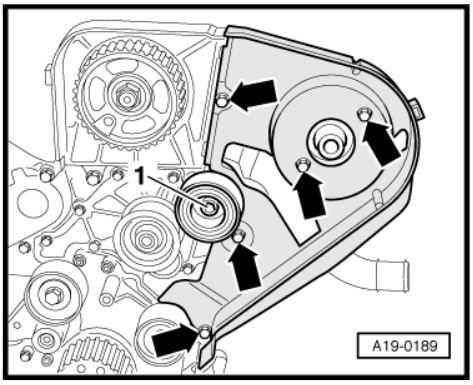

Note

-Item 1- can be ignored.

– Screw out bolts -arrows- and detach rear right toothed belt guard.

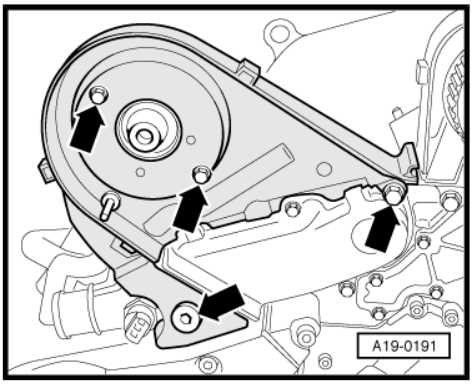

– Screw out bolts -2 … 4-.
– Detach high-pressure pump.

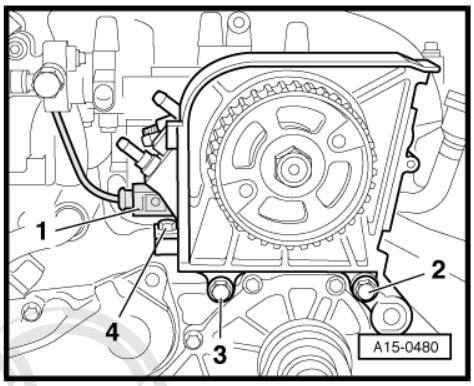

Note

Leave connector -1-, fuel hoses and distributor housing connected.

– Unplug connector at coolant temperature sender -3-.
– Screw out bolts -2-.
– Press right coolant pipe -1- to rear and detach.

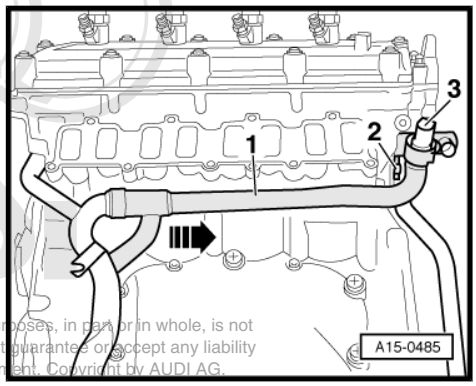

Protected by copyright. Copying for private or commercial purposes, in part or in whole, is not permitted unless authorised by AUDI AG. AUDI AG does not guarantee or accept any liability with respect to the correctness of information in this document. Copyright by AUDI AG.

– Unscrew front coolant pipe -arrows-.
– Detach front coolant pipe.

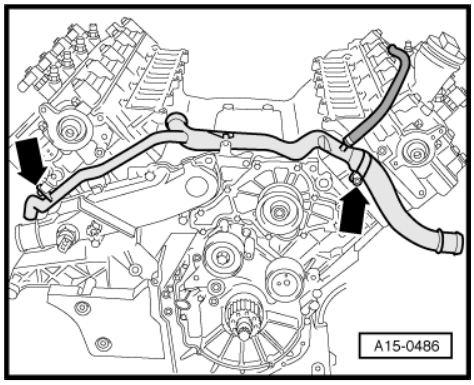

– Diagonally slacken off bolts -arrows- for cylinder head cover.
– Screw out bolts and detach cylinder head cover.

Protected by copyright. Copying for private or commercial purposes, in part or in whole, is not permitted unless authorised by AUDI AG. AUDI AG does not guarantee or accept any liability with respect to the correctness of information in this document. Copyright by AUDI AG.

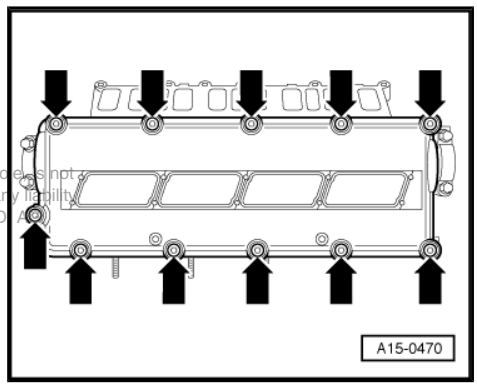

– Slacken off cylinder head bolts in sequence shown.
– Detach cylinder head and place it on a soft surface (foam).

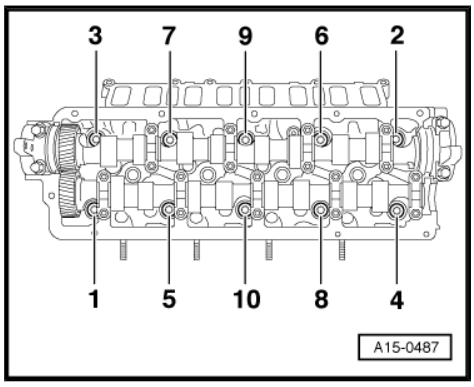

Note

Do not place cylinder head on workbench, as glow plugs could be damaged.

1.7 Removing right cylinder head

Special tools and workshop equipment required

♦ Multi-purpose tool -VW 771-

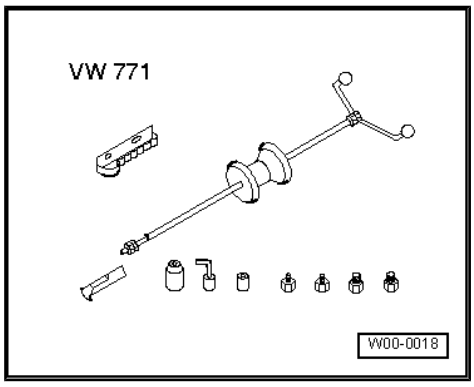

♦ Puller -T40059-

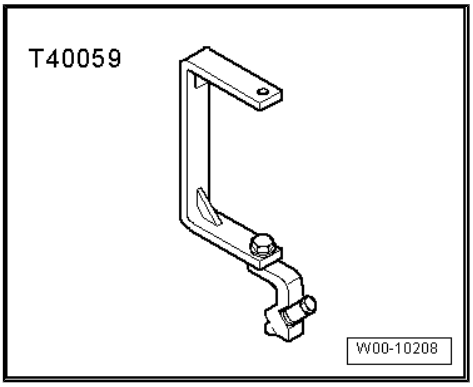

Sequence of operations

Note

Re-attach all cable ties unfastened or severed on removal at the same location on installation.

– Remove engine ⇒ page 4 .

– Remove intake manifold ⇒ Rep. Gr. 23 .

– Remove left connecting pipe for exhaust gas recirculation -arrows-.

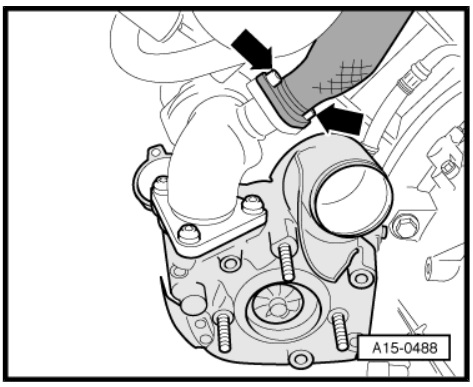

– Unscrew turbocharger from exhaust manifold -arrows-.

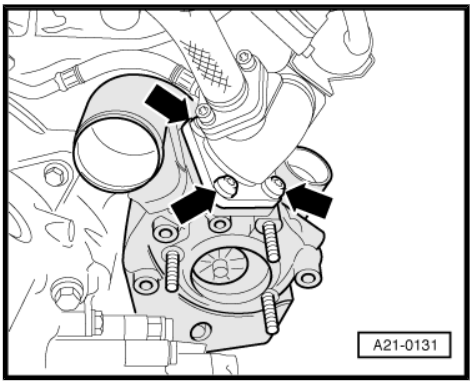

– Screw out bolts -arrows- at fuel cooler.

– Unscrew rear coolant pipe from cylinder block.

– Detach rear coolant pipe.

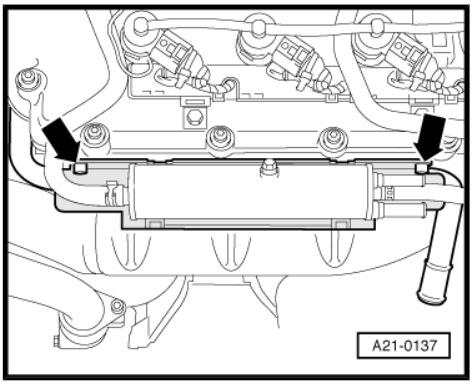

Protected by copyright. Copying for private or commercial purposes, in part or in whole, is not permitted unless authorised by AUDI AG. AUDI AG does not guarantee or accept any liability with respect to the correctness of information in this document. Copyright by AUDI AG.

– Unplug connectors -2 ... 7-.
– Unscrew and lay bare wiring harness -arrows-.
– Disconnect return pipe -1- at injectors. To do so, keep retaining clips pressed.

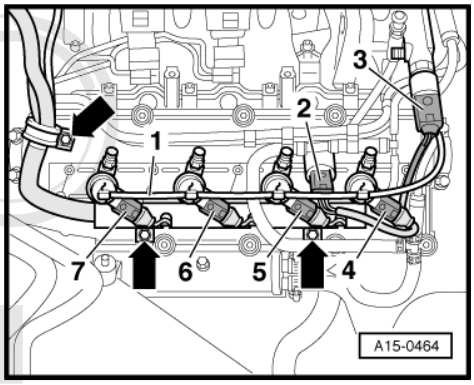

– Unscrew oil filler neck.

Protected by copyright. Copying for private or commercial purposes, in part or in whole, is not permitted unless authorised by AUDI AG. AUDI AG does not guarantee or accept any liability with respect to the correctness of information in this document. Copyright by AUDI AG.

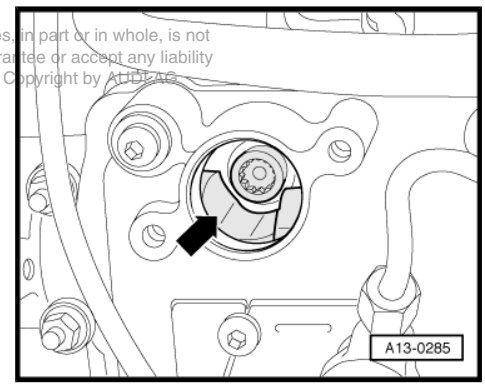

Caution

The engine is only to be turned at the crankshaft in the direction of engine rotation (clockwise).

– Crank engine until bolt is visible through recess at camshaft -arrow-.

Note

- *The injectors can only be removed in certain camshaft positions.*
- *Crank engine at crankshaft central bolt.*

– Unscrew covers for injectors -arrows-.
– Pull covers upwards and give $^1/_4$ turn (90°).

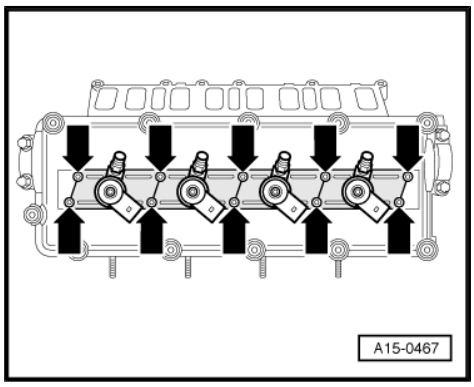

– Unscrew injectors -arrows-.

Caution

- *Mark assignment of injectors to cylinder.*
- *Used injectors are only to be re-installed at the same cylinder.*

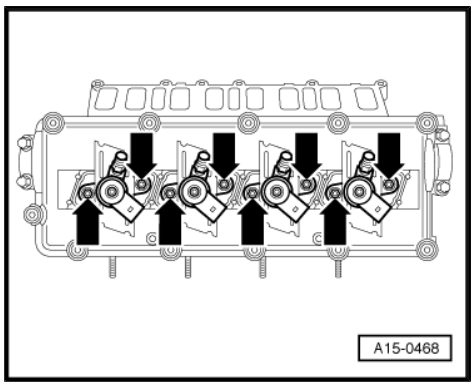

– Pull out injectors for cylinders -1- and -3-.

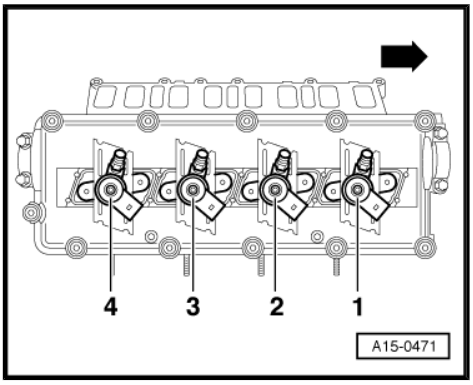

Note

-Arrow- points in direction of travel.

– Screw puller -T40059- -Item 1- onto injector to be removed and knock out injector using multi-purpose tool -VW 771- -Item 2-.

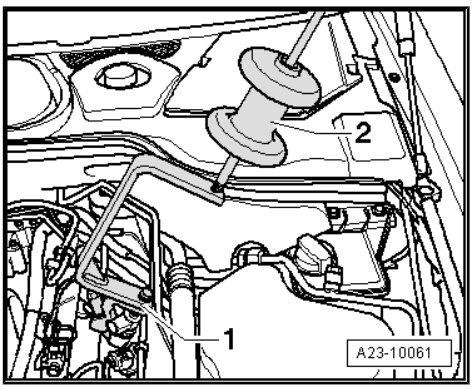

– Give the crankshaft a further 1/ 2 turn (180°) in clockwise direction.

– Pull out injectors for cylinders -2- and -4-.

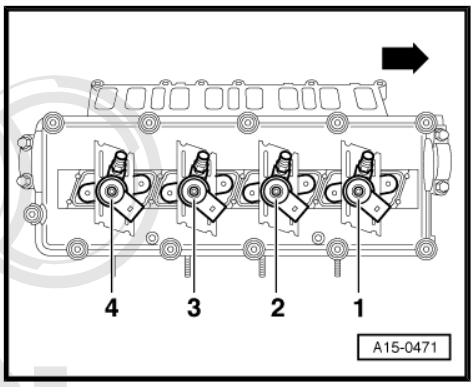

Note

-Arrow- points in direction of travel.

– Detach toothed belt from camshaft sprockets ⇒ page 58 .

– Screw out bolts -arrows- and detach rear right toothed belt guard.

Protected by copyright. Copying for private or commercial purposes, in part or in whole, is not permitted unless authorised by AUDI AG. AUDI AG does not guarantee or accept any liability with respect to the correctness of information in this document. Copyright by AUDI AG.

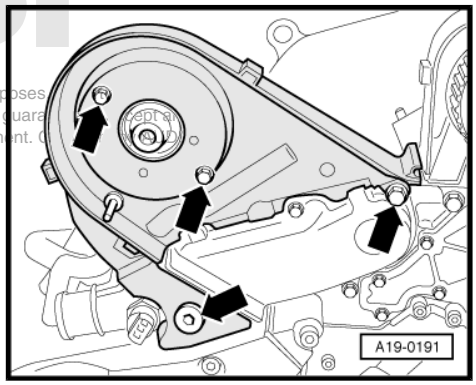

– Detach fuel pipes -1 … 4- from high-pressure pump.
– Detach distributor housing with fuel pipes.

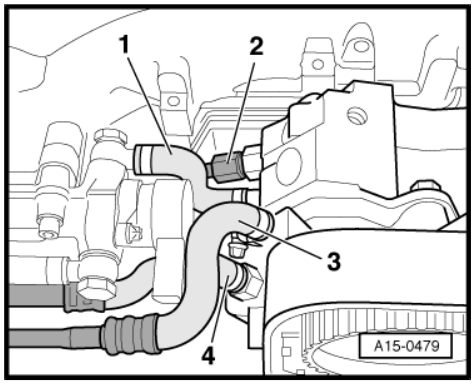

– Unplug connector at coolant temperature sender -3-.
– Screw out bolts -2-.
– Press coolant pipe -1- to rear and detach.

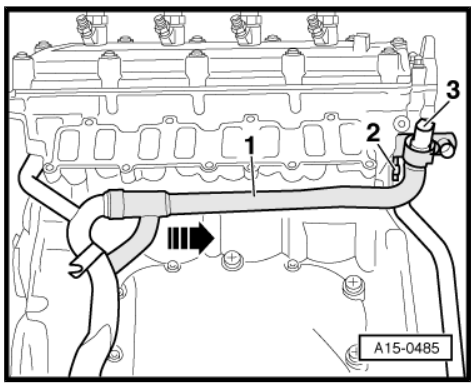

– Diagonally slacken off bolts -arrows- for cylinder head cover and detach cylinder head cover.

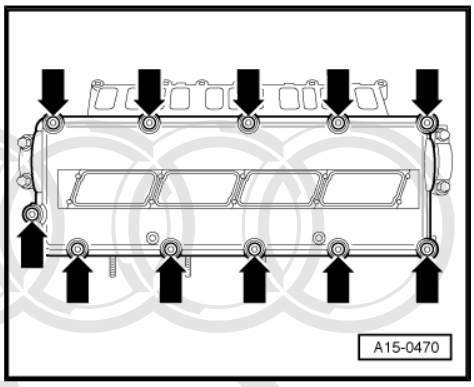

– Adhere to sequence when slackening off cylinder head bolts.
– Detach cylinder head and place it on a soft surface (foam).

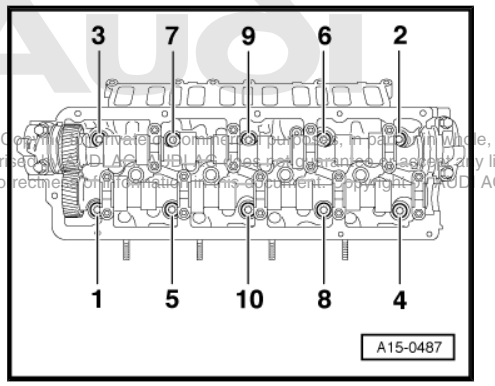

Note

Do not place cylinder head on workbench, as glow plugs could be damaged.

Protected by copyright. Copying for private or commercial purposes, in part or in whole, is not permitted unless authorised by AUDI AG. AUDI AG does not guarantee or assume any liability with respect to the correctness of information in this document. Copyright by AUDI AG.

1.8 Installing cylinder head

Note

- *Diesel cylinder heads are not to be reworked.*
- *Replace cylinder head bolts.*
- *Replace self-locking nuts and bolts when performing assembly work.*
- *Replace bolts tightened by turning through a specified angle, as well as sealing rings and seals.*
- *When performing repairs, carefully remove remnants of gasket from cylinder head and cylinder block. Take care to avoid producing long scoring marks or scratches.*
- *Carefully remove abrasive and grinding residue.*
- *There must not be any oil or coolant in the blind holes for the cylinder head bolts in the cylinder block.*
- *Leave new cylinder head gasket in wrapping until immediately prior to installation.*
- *Treat gasket with extreme care. Damage to silicone layer and in bead area will cause leakage.*
- *Position cylinder head gasket on centring pins. -Top- mark or part number must face cylinder head.*
- *Plastic bases for protecting open valves are only to be removed immediately prior to fitting cylinder head.*
- *When installing a reconditioned cylinder head with camshafts fitted, the contact surfaces between roller rocker finger and cam surface must be lubricated.*
- *Secure all hose connections with standard clamps ⇒ Parts catalogue .*
- *Re-attach all cable ties in the same locations on installation.*
- *After working on valve gear, carefully crank engine at least twice to ensure that no valves make contact on starting.*
- *The coolant must be completely replaced on replacing cylinder head or cylinder head gasket.*

Install in reverse order; paying attention to the following:

– Set crankshaft and camshaft to TDC before fitting cylinder head:

• The locking bolt -3242- must have been screwed in in TDC position.

Proprietary Copyright. Copying for private or commercial purposes, in part or in whole, is not permitted unless authorised by AUDI AG. AUDI AG does not guarantee or accept any liability with respect to the correctness of information in this document. Copyright by AUDI AG.

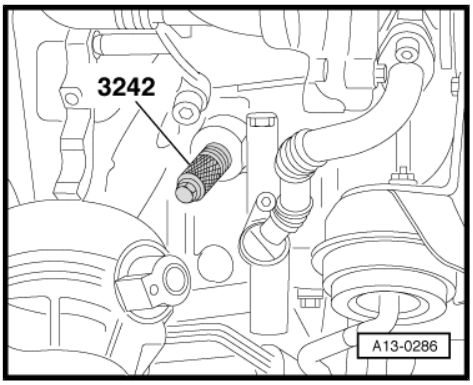

- The camshafts at both cylinder heads must have been set with the camshaft retainers -3458- .

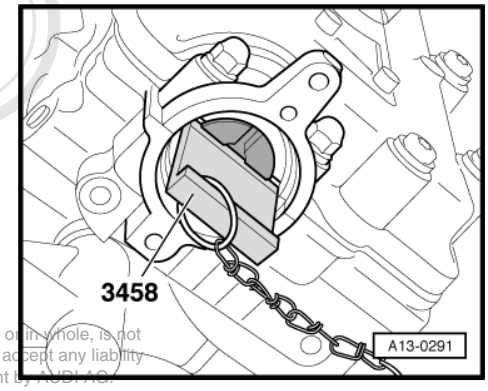

Protected by copyright. Copying for private or commercial purposes, in part or in whole, is not permitted unless authorised by AUDI AG. AUDI AG does not guarantee or accept any liability with respect to the correctness of information in this document. Copyright by AUDI AG.

– Heed cylinder head gasket identification.

-Arrow 1-: Holes

-Arrow 2-: Part no.

-Arrow 3-: Cylinder bank identification (L = left, R = right)

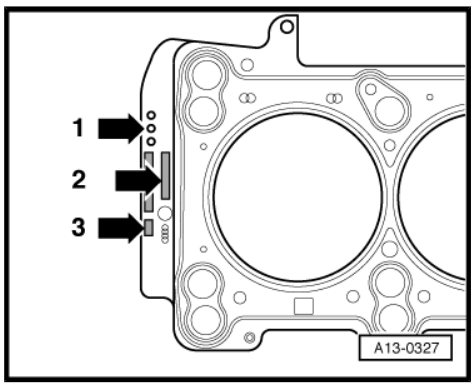

Note

- *If the cylinder head gasket or cylinder head has been replaced, select the new cylinder head gasket on the basis of the number of old gasket holes.*
- *If parts of the crankshaft group have been replaced, the new cylinder head gasket must be determined by measuring the piston projection at TDC* *⇒ page 79* *.*
- *The gaskets for the left and right cylinder head are differently shaped to prevent interchange.*

– Fit cylinder head gasket.

- Pay attention to centring pins in cylinder block.
- Heed installation position of cylinder head gasket. “Top” mark or part no. must face cylinder head.

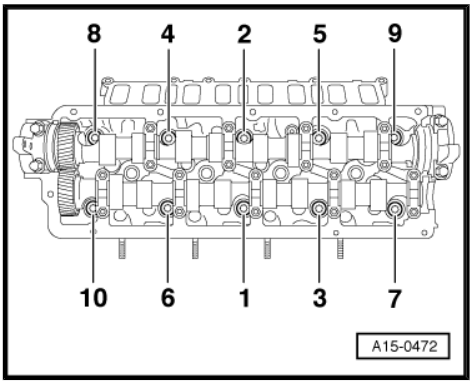

– Fit cylinder head.
– Insert and hand-tighten new cylinder head bolts.
– Tighten cylinder head bolts as follows in the sequence indicated:

1. Tighten to 35 Nm with torque wrench.
2. Tighten to 60 Nm with torque wrench.
3. Give further 90° ($^1/_4$) turn with fixed wrench.
4. Give further 90° ($^1/_4$) turn with fixed wrench.

Note

The cylinder head bolts do not have to be re-tightened on completion of repair work.

Note

Check whether toothed belt replacement is required on account of service life and condition.

Protected by copyright. Copying for private or commercial purposes, in part or in whole, is not permitted unless authorised by AUDI AG. AUDI AG does not guarantee or accept any liability in respect of the correctness of information in this document. Copyright by AUDI AG.

Left cylinder head:

– Replace O-ring at bottom of guide tube for dipstick.
– Fit toothed belt (adjust timing) ⇒ page 54 .

Right cylinder head:

– Fit toothed belt (adjust timing) ⇒ page 60 .

Both sides (continued):

– Install cylinder head cover: Left ⇒ page 84 , right ⇒ page 91 .
– Install intake manifold ⇒ Rep. Gr. 23 .
– Install engine ⇒ page 26 .
– Replace coolant ⇒ page 168 .

Tightening torques

Component		Nm
Coolant pipe to	Cylinder head	10
	Cylinder block	10
Crankcase breather pipe to cylinder block		10
High-pressure pump to cylinder block		22
Rear toothed belt guard to engine	M6	10
	M8	22
Turbocharger to exhaust manifold		20 + 90° 11) 12)
Connecting pipe for exhaust gas recirculation to exhaust manifold		10
Air pipe to turbocharger		10
Guide tube for dipstick to left cylinder head		10
Clamps for coolant hoses		2
Clamps for air hoses		3,5

11) 90° corresponds to a quarter turn.

12) Replace bolts.

Protected by copyright. Copying for private or commercial purposes, in part or in whole, is not permitted unless authorised by AUDI AG. AUDI AG does not guarantee or accept any liability with respect to the correctness of information in this document. Copyright by AUDI AG.

1.9 Exploded view of intake manifold

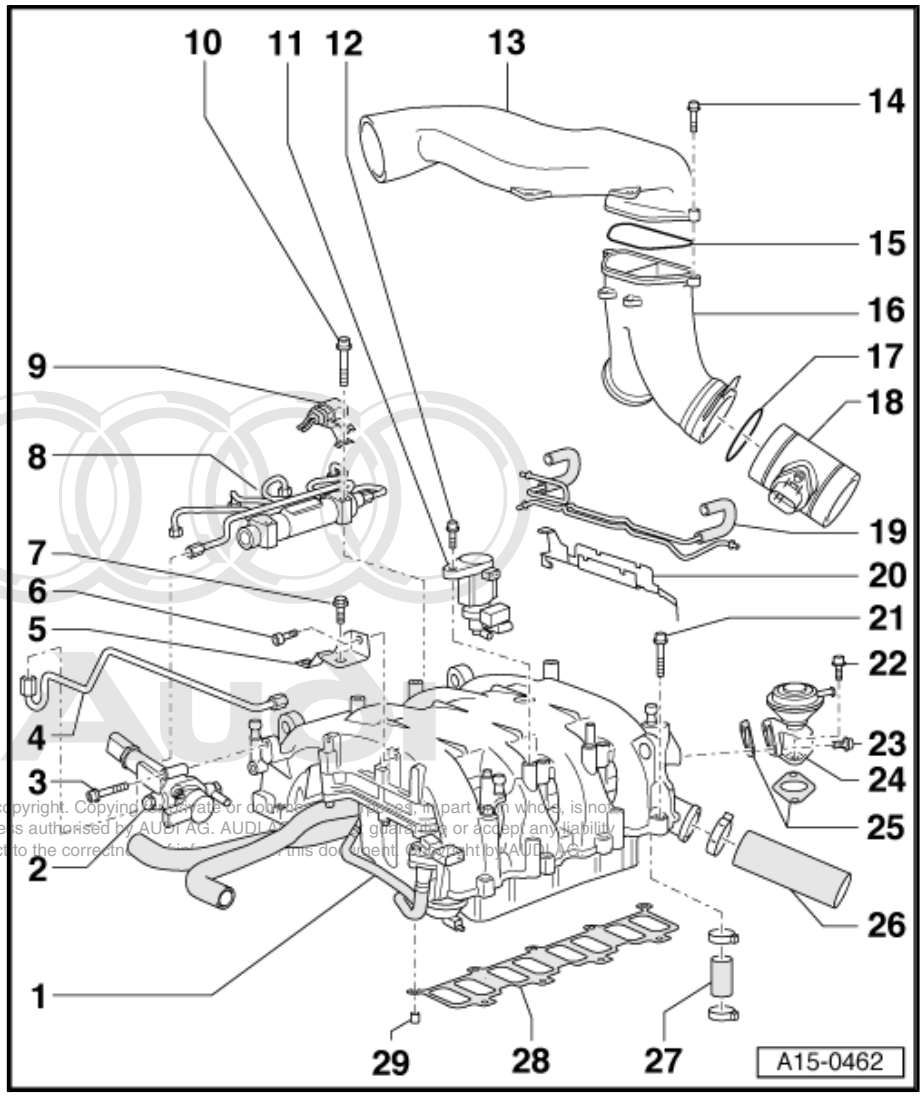

1 - Intake manifold
- ❑ With charge air cooler
- ❑ With exhaust gas recirculation system cooler
- ❑ With 2 intake manifold flaps
- ❑ Cannot be dismantled
- ❑ Removing and installing ⇒ Rep. Gr. 23

2 - Distributor housing

3 - 10 Nm

4 - Injector pipe - 25 Nm
- ❑ Do not alter shape

5 - Retaining bracket

6 - 22 Nm

7 - 22 Nm

8 - Rail element
- ❑ With injector pipes
- ❑ Provide support for connections at injectors when unfastening and tightening union nuts for injector pipes.
- ❑ Tighten injector pipes to 25 Nm
- ❑ Do not attempt to bend injector pipes to a different shape

9 - Connector
- ❑ For glow plugs
- ❑ With holder

10 - 22 Nm

11 - Variable intake manifold flap changeover valve -N239-
- ❑ Checking ⇒ Rep. Gr. 23

12 - 10 Nm

13 - Top air pipe

14 - 10 Nm

15 - Gasket
- ❑ Replace if damaged

16 - Rear air pipe
- ❑ Removing and installing ⇒ page 118

17 - O-ring
- ❑ Replace
- ❑ Moisten with fuel when fitting
- ❑ Do not use silicone-based lubricants

Protected by copyright. Copying for private or commercial purposes, in part or in whole, is not permitted unless authorised by AUDI AG. AUDI AG does not guarantee or accept any liability with respect to the correctness of information in this document. Copyright by AUDI AG.

18 - Air mass meter -G70- / air mass meter 2 -G246-

19 - Vacuum pipes

20 - Holder

- ❑ For vacuum pipes and wiring harness

21 - 10 Nm

- ❑ Heed sequence when unfastening and tightening ⇒ Rep. Gr. 23

22 - 22 Nm

23 - 22 Nm

24 - Mechanical exhaust gas recirculation valve

- ❑ Checking ⇒ page 277
- ❑ Removing and installing ⇒ page 279

25 - Gasket

- ❑ Replace

26 - Connecting hose

27 - Coolant hose

- ❑ Sever if necessary to remove intake manifold
- ❑ Secure with screw-type clip when fitting intake manifold

28 - Gasket

- ❑ Replace

29 - Dowel sleeve

- ❑ 2x per cylinder head
- ❑ Take care to prevent dowel sleeve dropping into intake ducts

1.10 Removing and installing rear air pipe

Protected by copyright. Copying for private or commercial purposes, in part or in whole, is not permitted unless authorised by AUDI AG. AUDI AG does not guarantee or accept any liability with respect to the correctness of information in this document. Copyright by AUDI AG.

Note

- ♦ *In the following, removal of the air pipe is described with the engine in position. Certain operations are not necessary if the engine has been removed.*
- ♦ *Re-attach all cable ties unfastened or severed on removal at the same location on installation.*

Removing

- Engine in position

– Detach engine cover -arrows-.

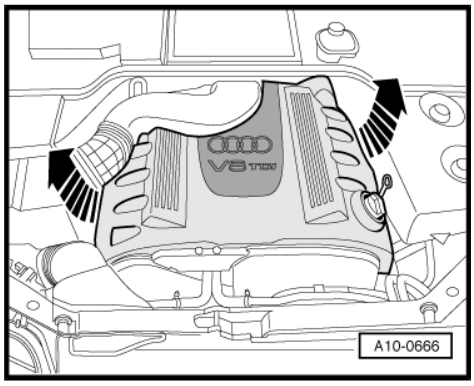

– Unclip cover -2- for air duct at lock carrier.
– Remove air duct -1-.

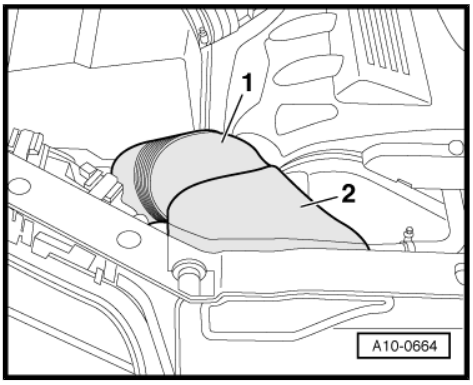

– Slacken off bolt -arrow- for torque reaction support by 6 turns.

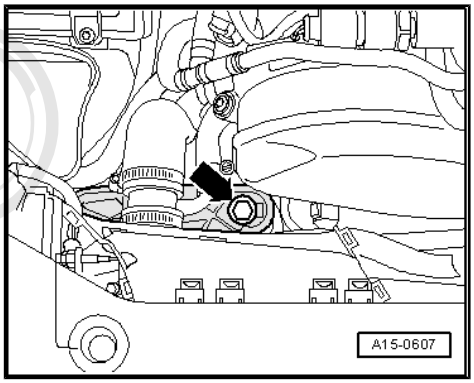

– Unfasten quick-release fasteners -2- and detach rear noise insulation.

Protected by copyright. Copying for private or commercial purposes, in part or in whole is not permitted unless authorised by AUDI AG. AUDI AG does not guarantee or accept any liability with respect to the correctness of information in this document. Copyright by AUDI AG.

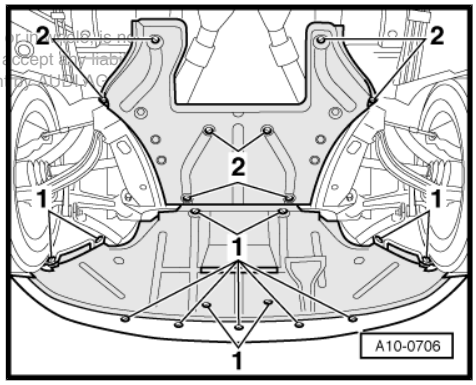

– Screw out bolts -1- and -2- for gearbox mountings on left and right.

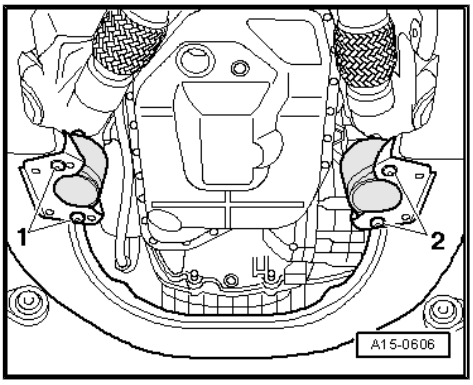

– Remove top air pipe with air hose -arrows-.

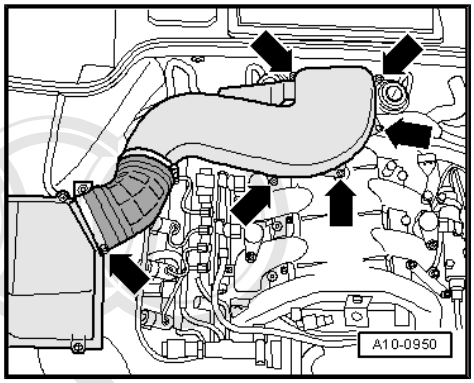

Note

Seal off inlet connections with clean cloths.

– Unscrew clamp -1-.
– Mark vacuum hoses -2- prior to disconnection.
– Detach vacuum hoses -2 ... 5-.
– Sever cable ties -arrows-.

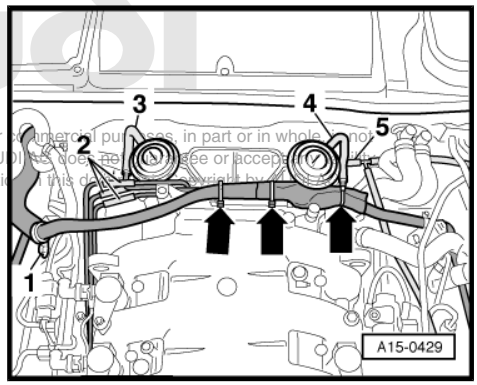

Protected by copyright. Copying for private or commercial purposes, in part or in whole, is not permitted unless authorised by AUDI AG. AUDI AG does not guarantee or accept any liability with respect to the correctness of information in this document.

– Set down wiring harness -1- to front.
– Sever cable tie -arrow- in holder.

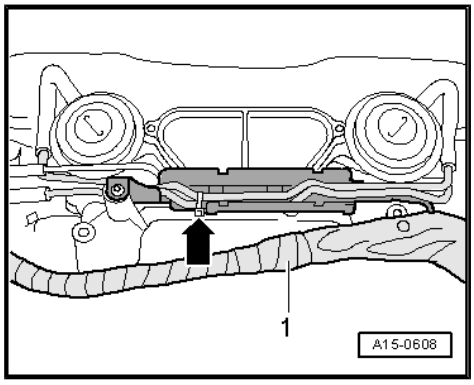

– Screw out bolts -arrows- on left and right at mechanical exhaust gas recirculation valves.

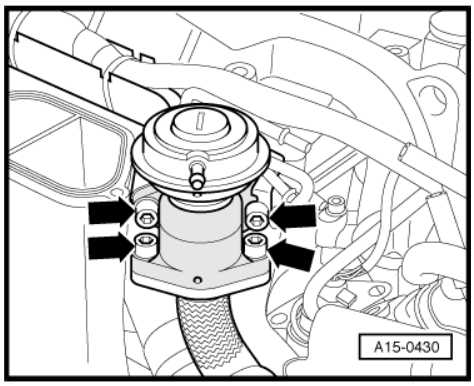

Note

Fig. shows right exhaust gas recirculation valve with engine removed.

– Detach vacuum pipes, holder and both mechanical exhaust gas recirculation valves.

– Unplug connector -2- for engine speed sender -G28- .
– Unclip bottom part of connector with holder -1- from mounting rail.

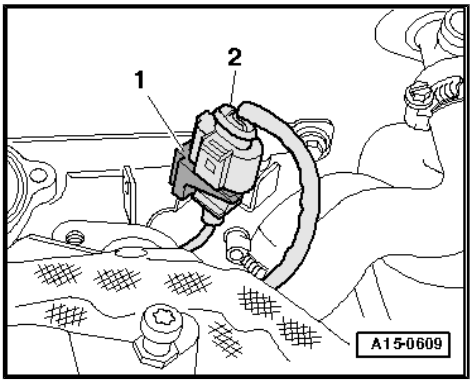

– Unscrew nut -2- and detach left part of mounting rail -1- in -direction of arrow-.

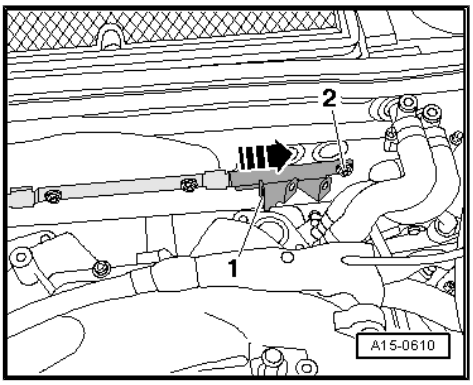

– Use lifting platform to raise vehicle approx. 20 cm.
– Place a suitable wooden block on a trolley jack and position this behind the ATF pan at the point marked with an -arrow- on the gearbox housing.
– Use the trolley jack to raise the automatic gearbox slightly until the engine tilts forward somewhat, thus providing access to the bulkhead.

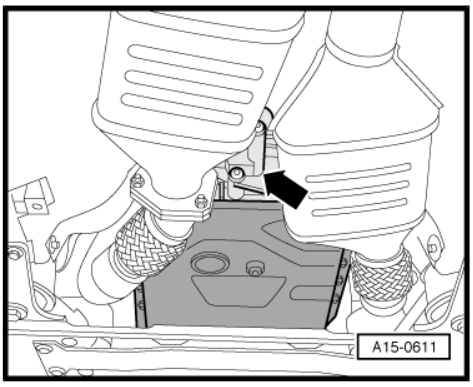

Protected by copyright. Copying for private or commercial purposes, in part or in whole, is not permitted unless authorised by AUDI AG. AUDI AG does not guarantee or accept any liability with respect to the correctness of information in this document. Copyright by AUDI AG.

– Pull out retaining clips -1- and -2- approx. 10 mm.
– Detach rear air pipe first from left and then from right air mass meter.
– Guide out rear air pipe upwards -arrows-.

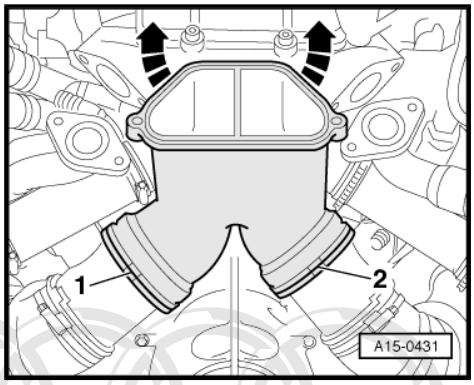

Note

Illustration shows rear view with engine removed.

Installing

Install in reverse order; paying attention to the following:

Note

- *Replace gaskets and seals.*
- *Hose connections and hoses must be free of oil and grease before fitting.*
- *Secure all hose connections with standard clamps ⇒ Parts catalogue .*
- *Re-attach all cable ties in the same locations on installation.*

Copyright. Copying for private or commercial purposes, in part or in whole, is not permitted unless authorised by AUDI AG. AUDI AG does not guarantee or accept any liability with respect to the correctness of information in this document. Copyright by AUDI AG.

– Coat O-rings in rear air pipe with fuel.

Note

Do not use silicone spray or silicone-based lubricants, as the silicone could damage the air mass meters.

– Pull out retaining clips -1- and -2- approx. 10 mm.
– Press left and then right air mass meter into rear air pipe -arrows-.
– Engage air mass meters with retaining clips.
– Check firm attachment of air mass meters in air pipe.
– Engage rear air pipe at intake manifold.
– Install left and right gearbox mountings.

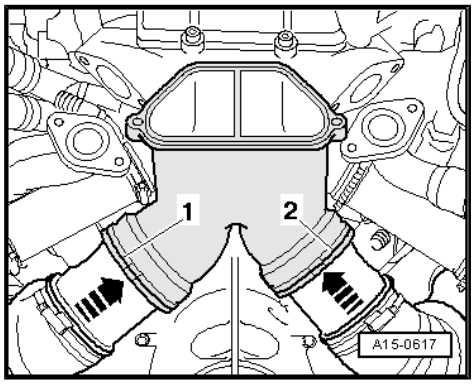

Tightening torques

Component		Nm
Mechanical exhaust gas recirculation valve to intake manifold or connecting pipe		22
Air pipe to turbocharger		10
Top air pipe to	Rear air pipe	10
	Intake manifold	10
Torque reaction support to mount for torque reaction support		40
Gearbox mounting to subframe		40
Clamps for air hoses		3,5

1.11 Checking compression

Special tools and workshop equipment required

- 14 mm socket wrench -3150-
- 10 mm jointed spanner -3220-
- Adapter set -V.A.G 1318/17-
- Torque wrench -V.A.G 1331-
- Ratchet -V.A.G 1331/1-
- Open ring spanner attachment -V.A.G 1331/8-

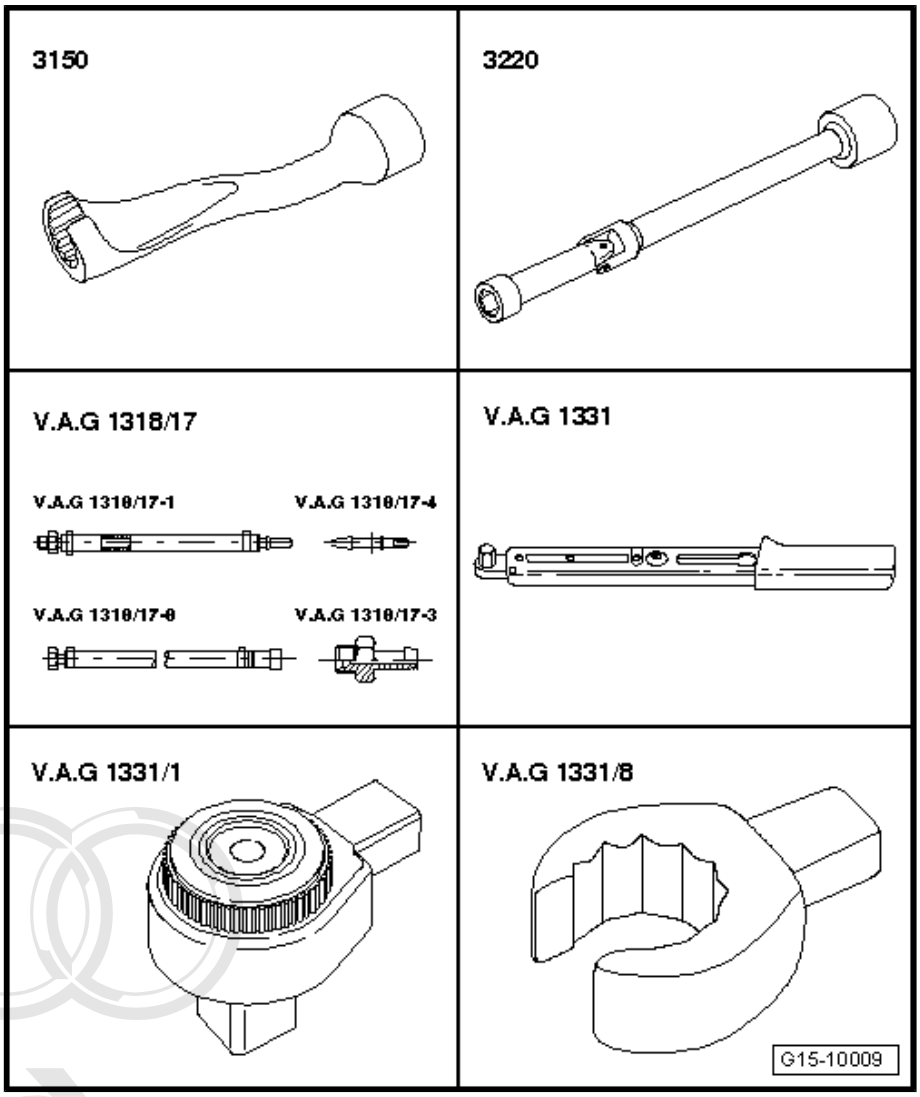

- Compression tester -V.A.G 1763- with adapter -V.A.G 1763/5-

Protected by copyright. Copying for private or commercial purposes, in part or in whole, is not permitted unless authorised by AUDI AG. AUDI AG does not guarantee or accept any liability with respect to the correctness of information in this document. Copyright by AUDI AG.

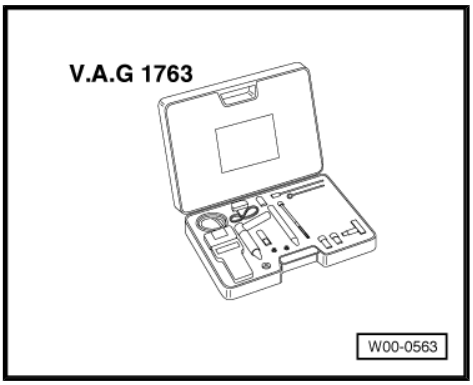

- Fuel canister

Test requirements

- Engine oil temperature min. 30 °C
- Battery voltage min. 12.5 V

Test sequence

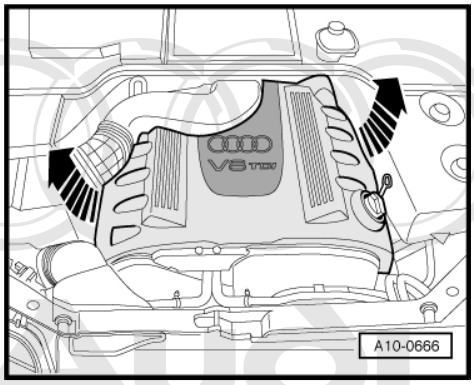

Note

Re-attach all cable ties unfastened or severed at the same location on assembly.

– Detach engine cover -arrows-.

– Remove top air pipe with air hose -arrows-.

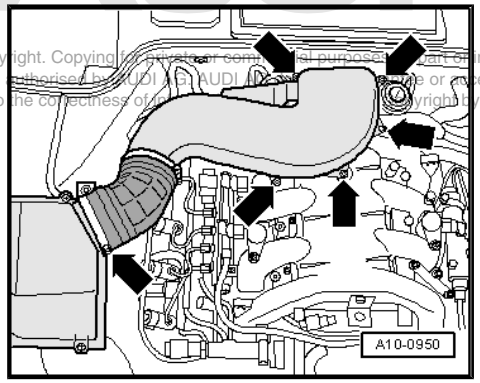

Protected by copyright. Copying for private or commercial purposes, in part or in whole, is not permitted unless authorised by AUDI AG. AUDI AG does not guarantee or accept any liability with respect to the correctness of the information. Copyright by AUDI AG.

Note

Seal off inlet connections with clean cloths.

– Unscrew union nut -1- at distributor housing.
– Unplug connector -2-.

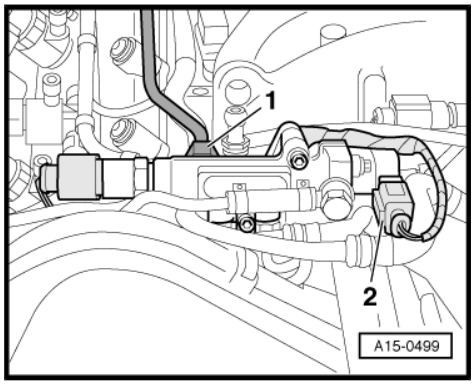

– Unplug connector -1- at rail element for right cylinder bank.
– Lay bare wiring harness at rail element.
– Unscrew union nuts -4 ... 7-.

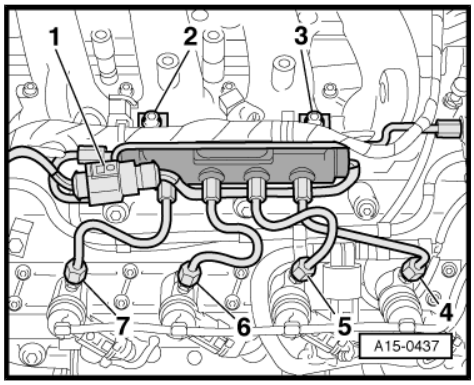

Note

Provide support for connections at injectors when unfastening union nuts for injector pipes.

– Screw out bolts -2- and -3-.
– Take out rail element.

– Unscrew union nut -1- at rail element for left cylinder bank.
– Unscrew union nuts -4 ... 7-.

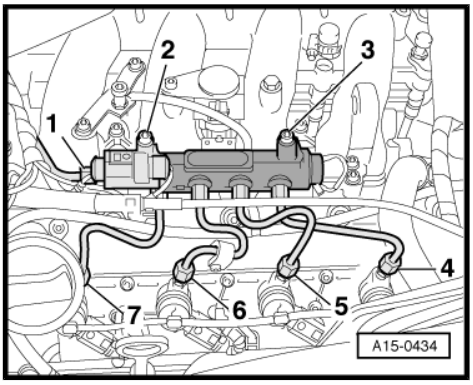

Note

Provide support for connections at injectors when unfastening union nuts for injector pipes.

– Screw out bolts -2- and -3-.
– If necessary, unplug connector at holder to permit removal of rail element.

– Remove intake manifold pressure sender -G71- -arrow-.
– Unplug connectors from glow plugs.

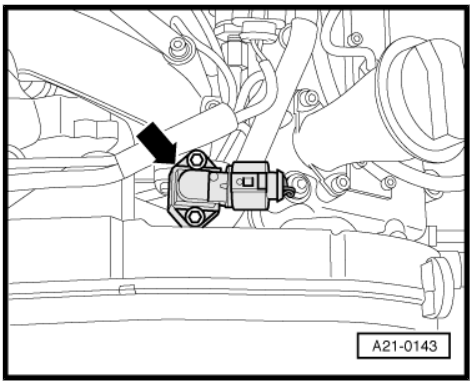

– Use 10 mm jointed spanner -3220- to remove all glow plugs.

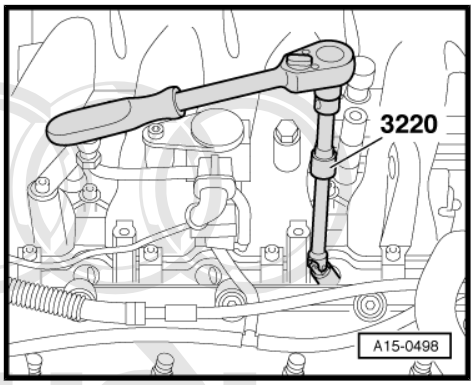

– Connect up adapter set -V.A.G 1318/17-1- to -V.A.G 1318/17-8- .
– Connect adapter set -V.A.G 1318/17-8- to distributor housing.
– Attach test hose -1- to injector pipe of left cylinder bank.
– Route the hoses into a fuel canister.

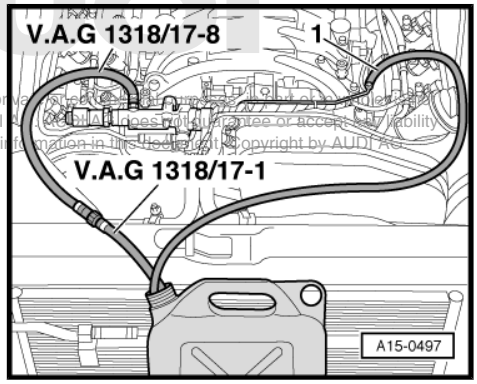

Protected by copyright. Copying for private or commercial purposes, in part or in whole, is not permitted unless authorised by AUDI AG. AUDI AG does not guarantee or accept any liability with respect to the correctness of information in this document. Copyright by AUDI AG.

– Screw in adapter -V.A.G 1763/5- in place of glow plugs.

– Check compression with compression tester -V.A.G 1763- .

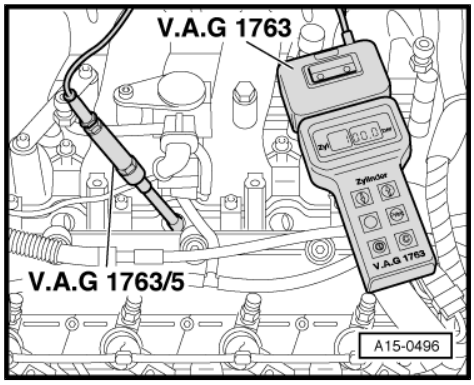

Note

For information on how to use tester, refer to ⇒ Operating instructions .

– Have a 2nd mechanic floor the accelerator and at the same time operate the starter until no further pressure increase is indicated by the tester.

Compression values	bar (gauge)
As-new	30 … 33
Wear limit	23
Max. difference between cylinders	5

Assemble in reverse order; paying attention to the following:

Note

- *Replace gaskets and seals.*
- *Re-attach all cable ties in the same locations.*

– Fit glow plugs ⇒ Rep. Gr. 28 .

– Use torque wrench -V.A.G 1331- with open ring spanner attachment -V.A.G 1331/8- for tightening injector pipe.

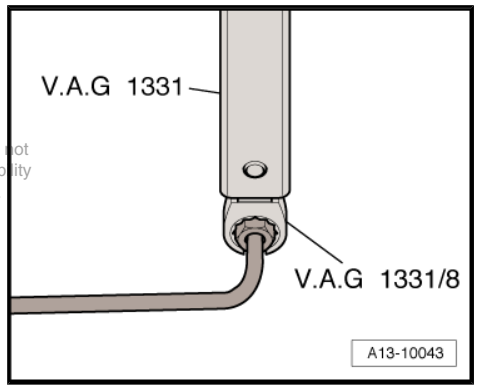

Note

Protected by copyright. Copying for private or commercial purposes, in part or in whole, is not permitted unless authorised by AUDI AG. AUDI AG does not guarantee or accept any liability with respect to the correctness of information in this document. Copyright by AUDI AG.

Provide support for connections at injectors when tightening union nuts for injector pipes.

– Alternatively, use can be made of torque wrench -V.A.G 1331- with ratchet -V.A.G 1331/1- and 14 mm socket wrench -3150- .

– As a final step, interrogate and erase engine control unit fault memory, as unplugging the connectors causes faults to be stored ⇒ Vehicle diagnosis, testing and information system VAS 5051.

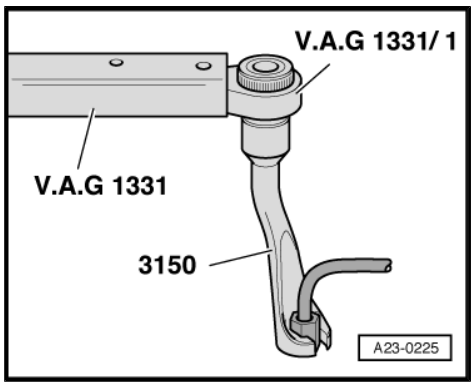

Tightening torques

Component		Nm
Rail element to intake manifold		22
Injector pipes		25
Top air pipe to	Rear air pipe	10
	Cylinder head	10

2 Servicing valve gear

Note

- *The engine is not to be started for approx. 30 minutes after fitting the camshafts. Hydraulic valve lifters must be allowed to settle (valves would otherwise strike piston).*
- *After working on valve gear, carefully crank engine at least twice by hand to ensure that no valves make contact on starting.*

2.1 Exploded view of valve gear

Note

The illustration shows the cylinder head for the left cylinder bank.

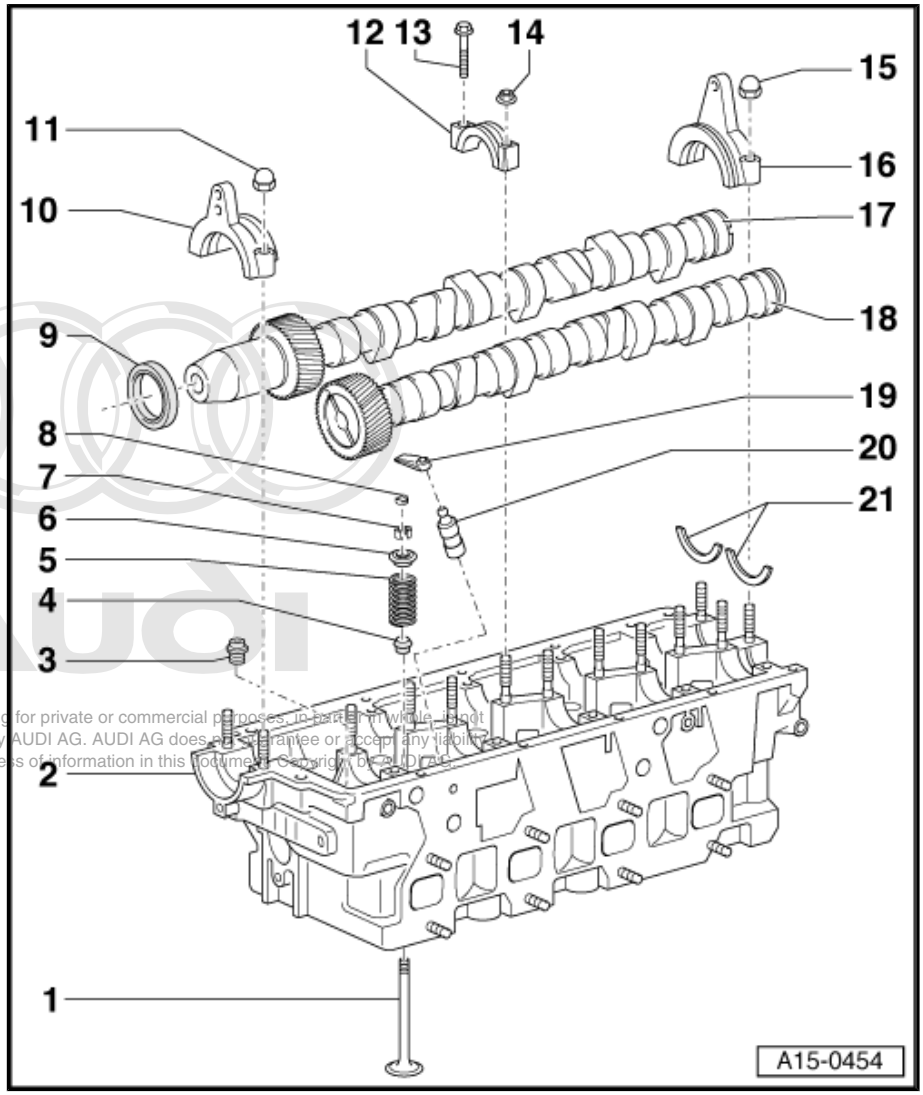

1 - Valve
- ❑ Checking ⇒ page 140
- ❑ Valve dimensions ⇒ page 139

2 - Cylinder head
- ❑ Removing left cylinder head ⇒ page 103
- ❑ Removing right cylinder head ⇒ page 108
- ❑ Installing cylinder head ⇒ page 113
- ❑ Valve seats are not to be reworked

3 - Pressure limiting valve 2.7 bar - 25 Nm
- ❑ For lubrication points in cylinder head

4 - Valve stem seal
- ❑ Replacing ⇒ page 135

5 - Valve spring

6 - Valve spring plate

7 - Valve cotters

8 - Rocker finger guide

9 - Oil seal
- ❑ Replacing ⇒ page 130

10 - Outer bearing cap
- ❑ For inlet camshaft
- ❑ Prior to installation, apply sealant to sealing surfaces of outer bearing caps; sealant ⇒ Parts catalogue
- ❑ Installation sequence ⇒ page 132

Protected by copyright. Copying for private or commercial purposes, in part or in whole, is not permitted unless authorised by AUDI AG. AUDI AG does not guarantee or accept any liability with respect to the correctness of information in this document. Copyright by AUDI AG.

11 - Cap nut - 15 Nm

12 - Bearing cap

- ❑ Installation position ⇒ page 128
- ❑ Installation sequence ⇒ page 132

13 - 10 Nm

14 - 10 Nm

15 - Cap nut - 15 Nm

16 - Outer bearing cap

- ❑ For inlet camshaft
- ❑ Prior to installation, apply sealant to sealing surfaces of outer bearing caps; sealant ⇒ Parts catalogue
- ❑ Installation sequence ⇒ page 132

17 - Inlet camshaft

- ❑ Removing and installing ⇒ page 131
- ❑ Checking axial clearance ⇒ page 129
- ❑ Check radial clearance with Plastigage
- ❑ As-new radial clearance: 0.035 … 0.085 mm
- ❑ Radial clearance wear limit: 0.10 mm
- ❑ Runout: max. 0.04 mm

18 - Exhaust camshaft

- ❑ Removing and installing ⇒ page 131
- ❑ Checking axial clearance ⇒ page 129
- ❑ Check radial clearance with Plastigage
- ❑ As-new radial clearance: 0.035 … 0.085 mm
- ❑ Radial clearance wear limit: 0.10 mm
- ❑ Runout: max. 0.04 mm

19 - Rocker finger

- ❑ Mark installation position with coloured pen

20 - Hydraulic valve lifter

- ❑ Mark installation position with coloured pen
- ❑ Checking ⇒ page 138
- ❑ Lubricate contact surface before fitting

21 - Thrust washers

- ❑ 2x

Protected by copyright. Copying for private or commercial purposes, in part or in whole, is not permitted unless authorised by AUDI AG. AUDI AG does not guarantee or accept any liability with respect to the correctness of information in this document. Copyright by AUDI AG.

Installation position of bearing caps

– Heed numbering of bearing caps -0 … 8-.

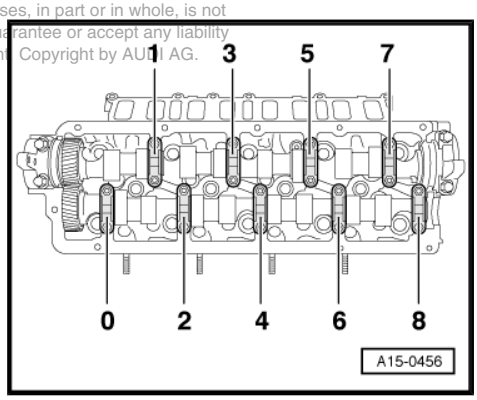

– Pay attention to centre offset. Before installing camshaft, fit bearing caps and determine installation position.

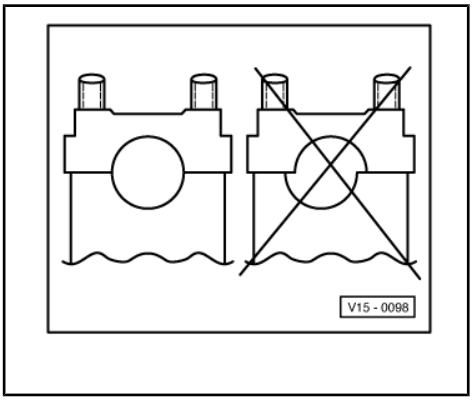

2.2 Checking axial clearance of camshafts

Special tools and workshop equipment required

♦ Universal dial gauge holder -VW 387-

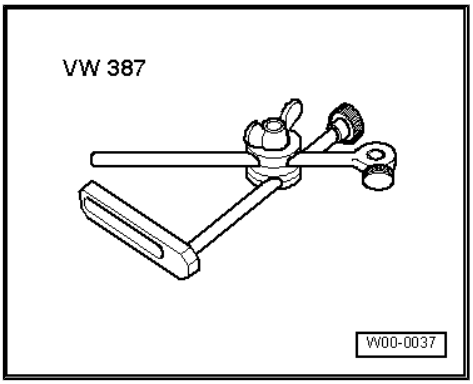

Protected by copyright. Copying for private or commercial purposes, in part or in whole, is not permitted unless authorised by AUDI AG. AUDI AG does not guarantee or accept any liability with respect to the correctness of information in this document. Copyright by AUDI AG.

♦ Dial gauge -VAS 6079-

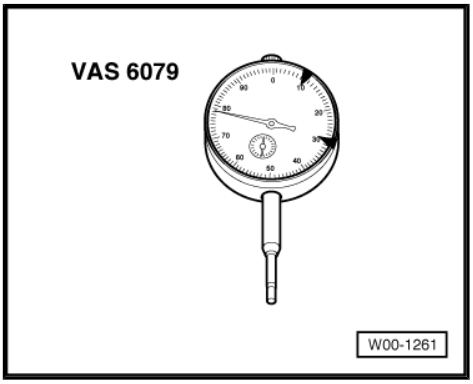

Test sequence

– Attach universal dial gauge holder -VW 387- with dial gauge -VAS 6079- to cylinder head.

Inlet camshaft:

– For measurement, remove rocker fingers and re-install camshaft with bearing caps at front and rear -top arrows-.

– Move camshaft in direction of arrow -double arrow-.

• Specification: 0.06 … 0.15 mm

• Wear limit 0.30 mm

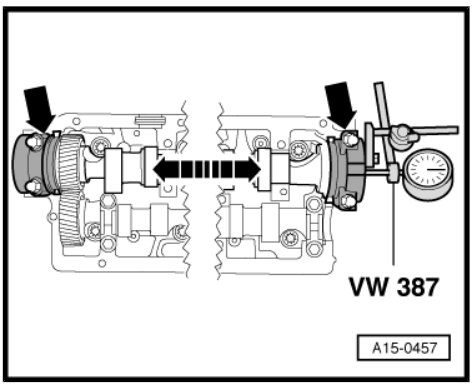

Exhaust camshaft:

– For measurement, remove rocker fingers and re-install camshaft with bearing caps at front and rear -bottom arrows-.
– Move camshaft in direction of arrow -double arrow-.
• Specification: 0.06 … 0.15 mm
• Wear limit 0.30 mm

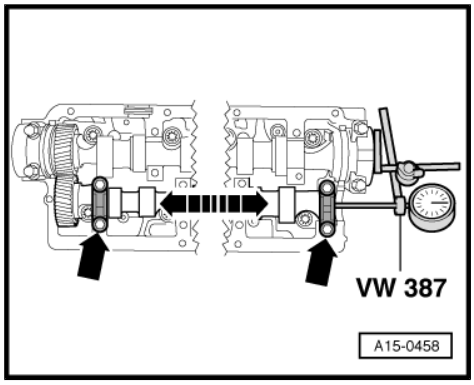

2.3 Replacing oil seals for camshafts

Special tools and workshop equipment required

♦ Oil seal extractor -2085-

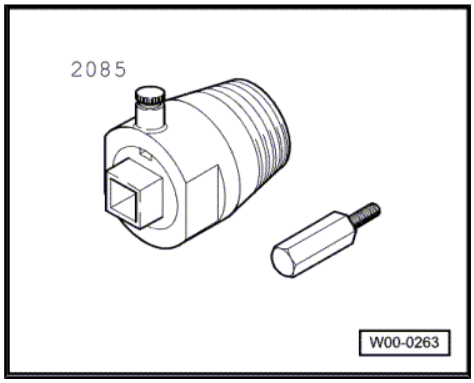

♦ Fitting sleeves -3241-

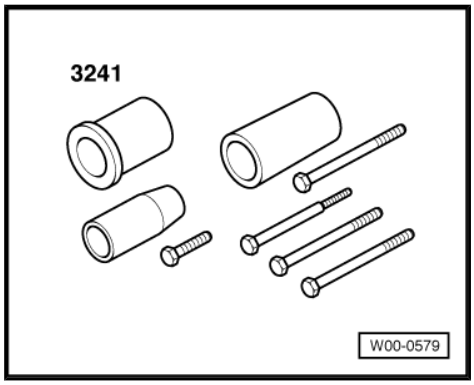

Protected by copyright. Copying for private or commercial purposes, in part or in whole, is not permitted unless authorised by AUDI AG. AUDI AG does not guarantee or accept any liability with respect to the correctness of information in this document. Copyright by AUDI AG.

Sequence of operations

- Engine in position

– Detach toothed belt from camshaft sprockets ⇒ page 58 .

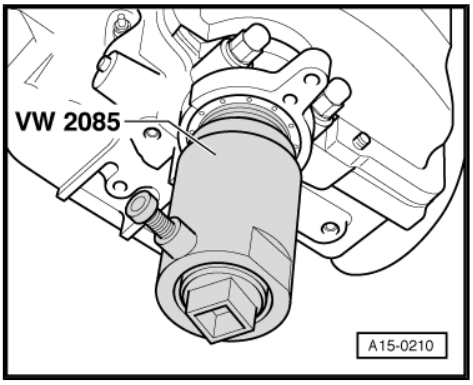

Note

In the event of radial shaft seal leakage, replace oil seals at both cylinder heads.

– Position inner part of oil seal extractor -2085- flush with outer part and lock with knurled screw.

– Lubricate threaded end of oil seal extractor -2085- , fit in position and screw as far as possible into oil seal whilst exerting firm pressure.

– Slacken off knurled screw and turn inner part towards camshaft until oil seal has been extracted.

– Clamp flats of oil seal extractor in a vice and use pliers to remove oil seal.

– Clean contact and sealing surfaces.

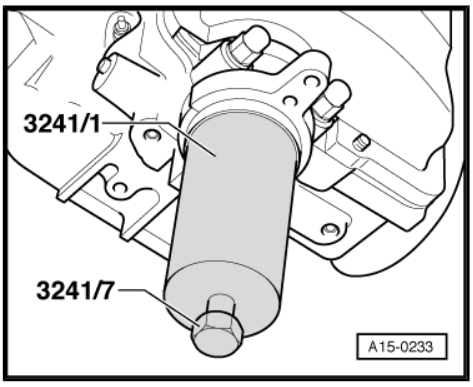

Note

Do not lubricate sealing lip and outer rim of oil seal before pressing in.

– Slip oil seal onto taper of camshaft.

– Press in oil seal with fitting sleeve -3241/1- and bolt -3241/7- such that it is flush.

– Fit toothed belt (adjust timing) ⇒ page 60 .

2.4 Removing and installing camshafts

Special tools and workshop equipment required

♦ Sealant ⇒ Parts catalogue

Removing

- Engine in position

– Remove cylinder head cover: Left ⇒ page 84 , right ⇒ page 91 .

– Detach toothed belt from camshaft sprockets ⇒ page 58 .

Left cylinder head:

Protected by copyright. Copying for private or commercial purposes, in part or in whole, is not permitted unless authorised by AUDI AG. AUDI AG does not guarantee or accept any liability with respect to the correctness of information in this document. Copyright by AUDI AG.

– Screw out bolts -arrows-.

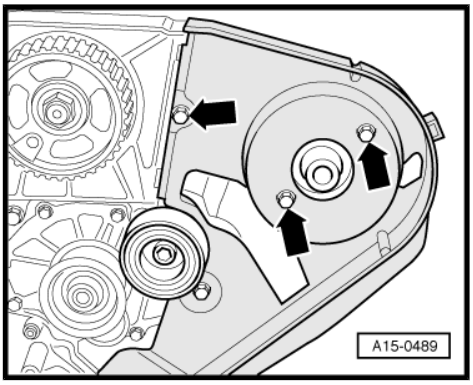

Note

Leave rear toothed belt guard in position.

Right cylinder head:

– Screw out bolts -arrows- and detach rear right toothed belt guard.

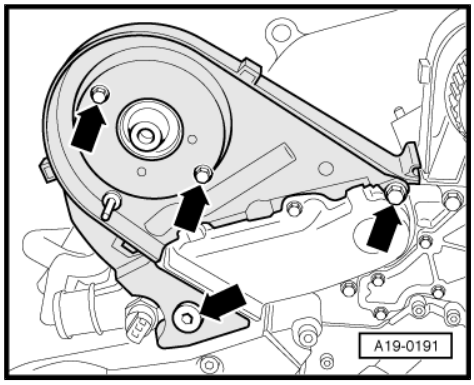

Both sides (continued):

– Mark installation position of rocker fingers with a coloured pen.

– Unscrew outer bearing caps for inlet camshaft.

– Unscrew bearing caps -0-, -3-, -4-, -7- and -8-.

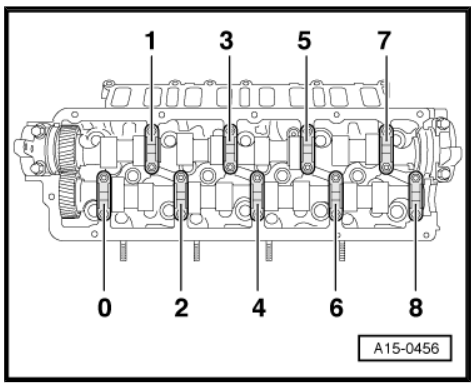

Note

Pay attention to rocker fingers and guides when detaching camshafts.

– Unscrew bearing caps -2- and -6- diagonally and in stages.

– Take out exhaust camshaft.

– Unscrew bearing caps -1- and -5- diagonally and in stages.

– Take out inlet camshaft.

– Remove all old sealant from cylinder head and bearing cap.

Installing

• Crankshaft locked in position with locking bolt -3242-

– Insert thrust washers.

– Insert rocker finger guides and rocker fingers.

Note

♦ *Pay attention to marked installation position of rocker fingers.*

♦ *Pay attention to correct position of rocker finger guides.*

♦ *Use a small quantity of grease to facilitate installation of guides and rocker fingers.*

– Insert inlet camshaft such that camshaft retainer -3458- can be fitted.

Protected by copyright. Copying for private or commercial purposes, in part or in whole, is not permitted unless authorised by AUDI AG. AUDI AG does not guarantee or assume any liability with respect to the correctness of information in this document. Copyright by AUDI AG.

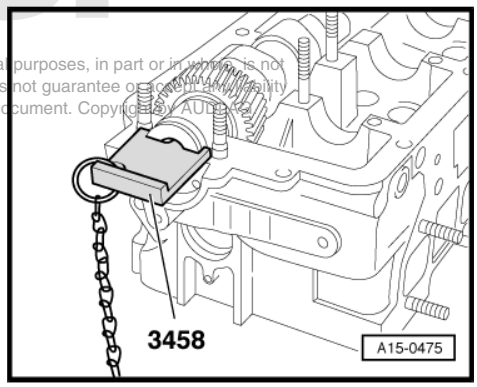

– Pay attention to centre offset. Before installing camshaft, fit bearing caps and determine installation position.

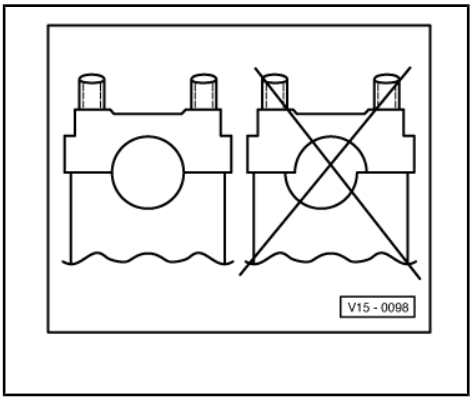

– Screw on bearing caps -1- and -5-.

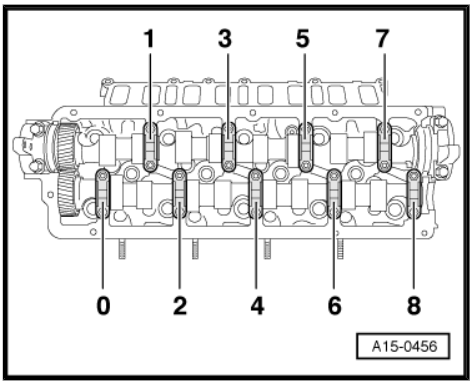

Note

Pay attention to numbering on bearing caps.

– Likewise insert exhaust camshaft such that camshaft retainer -3458- can be fitted.

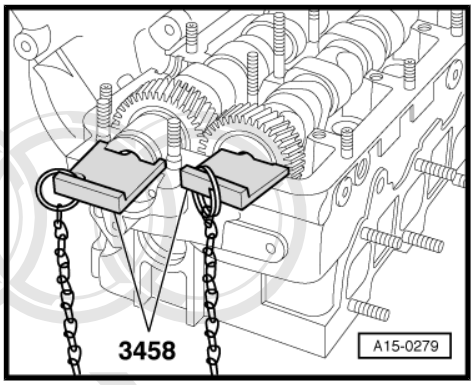

Note

- *Illustration shows right cylinder head removed.*
- *For left cylinder head, camshaft retainer -3458- is inserted at front of exhaust camshaft.*

– Screw on bearing caps -2- and -6-.

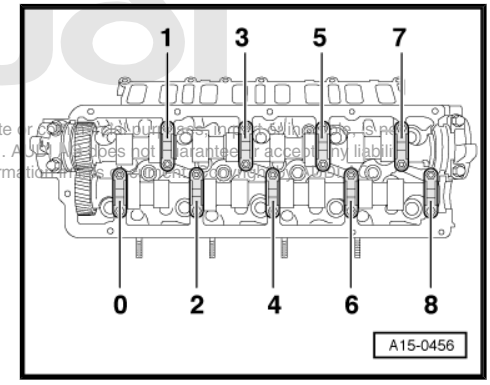

Note

Pay attention to numbering on bearing caps.

Protected by copyright. Copying for private or commercial purposes, in part, is not permitted unless authorised by AUDI AG. AUDI AG does not guarantee or accept any liability with respect to the correctness of information in this document.

– Check setting again with camshaft retainer -3458- .
– Check installation position of rocker fingers and guides.
– Screw on the remaining bearing caps -0-, -3-, -4-, -7- and -8-.

– Clean contact surfaces between cylinder head and bearing cap. These must be free from oil and grease.

– Apply sealant to -hatched areas- of outer bearing cap at front left/rear right.

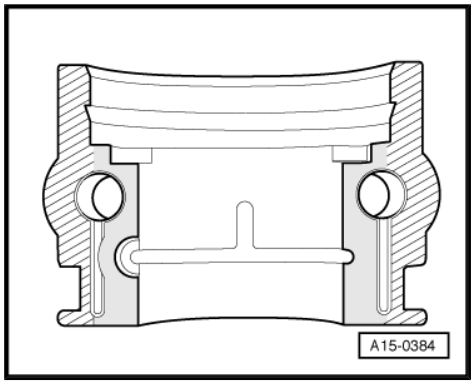

– Apply thin coat of sealant to -hatched areas- of outer bearing cap at rear left/front right.

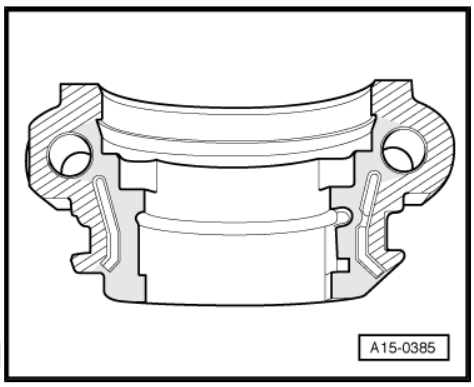

Note

Sealant must not come into contact with the -patterned areas-.

– Install outer bearing caps.

Perform further installation in reverse order; paying attention to the following:

Note

Replace gaskets and seals.

– Fit oil seals for camshafts ⇒ page 130 .

– Install cylinder head cover: Left ⇒ page 84 , right ⇒ page 91 .

– Fit toothed belt (adjust timing) ⇒ page 60 .

Protected by copyright. Copying for private or commercial purposes, in part or in whole, is not permitted unless authorised by AUDI AG. AUDI AG does not guarantee or accept any liability with respect to the correctness of information in this document. Copyright by AUDI AG.

Note

- *The engine is not to be started for approx. 30 minutes after fitting the camshafts. Hydraulic valve lifters must be allowed to settle (valves would otherwise strike piston).*
- *After working on valve gear, carefully crank engine at least twice to ensure that no valves make contact on starting.*

Tightening torques

Component		Nm
Bearing cap to cylinder head	Cap nut	15
	Hexagon nut	10
	Hexagon bolt	10

2.5 Replacing valve stem seals

Special tools and workshop equipment required

- 10 mm jointed spanner -3220-
- Puller for valve stem seal -3364-
- Pressing-on tool for valve stem seal -3365-
- Disassembly and assembly tool for cotters -VAS 5161-

Protected by copyright. Copying for private or commercial purposes, in part or in whole, is not permitted unless authorised by AUDI AG. AUDI AG does not guarantee or accept any liability with respect to the correctness of information in this document. Copyright by AUDI AG.

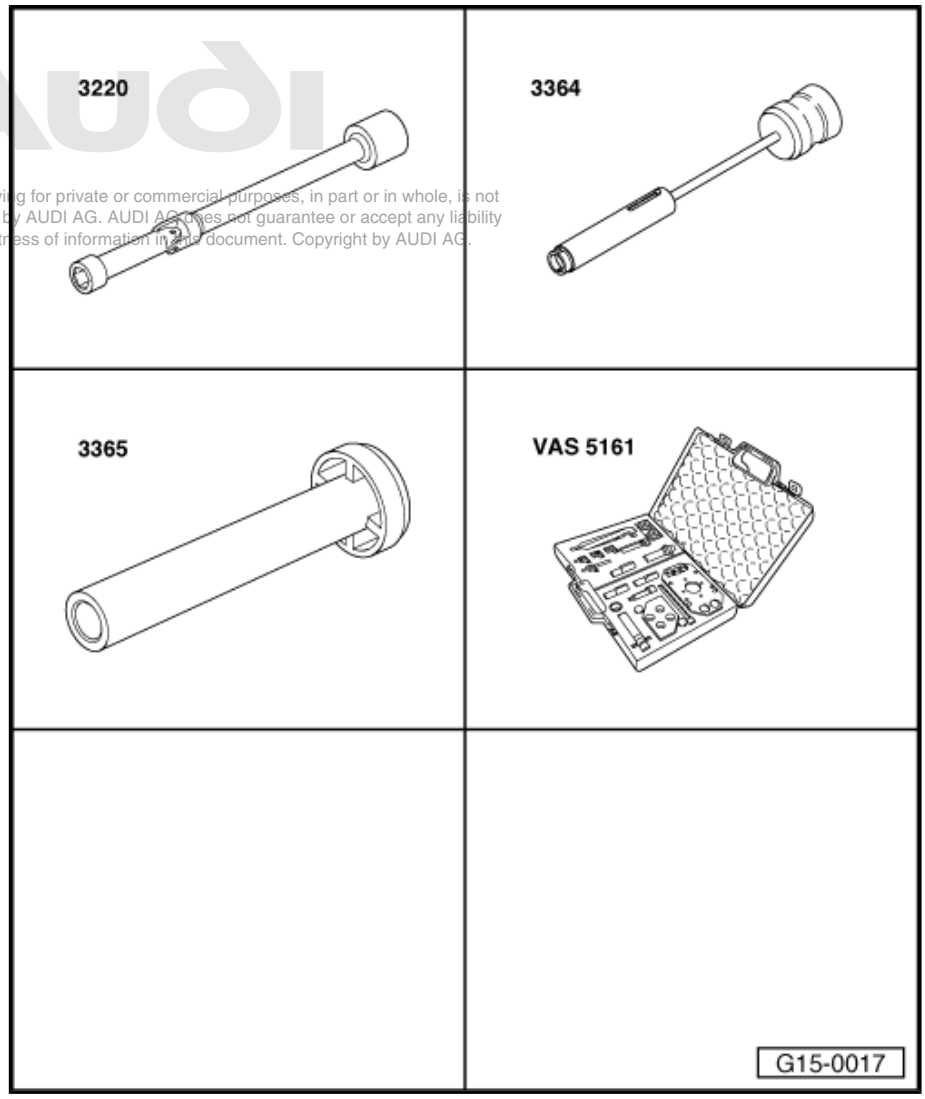

Sequence of operations

- Cylinder head in position

– Remove camshafts ⇒ page 131 .

– Use jointed spanner -3220- to remove all glow plugs.

– Position guide plate -VAS 5161/9- on cylinder head.

– Attach guide plate to cylinder head with knurled screws -VAS 5161/12- .

– Insert punch -VAS 5161/3- in guide plate and use a plastic-headed hammer to knock out the seized valve cotters.

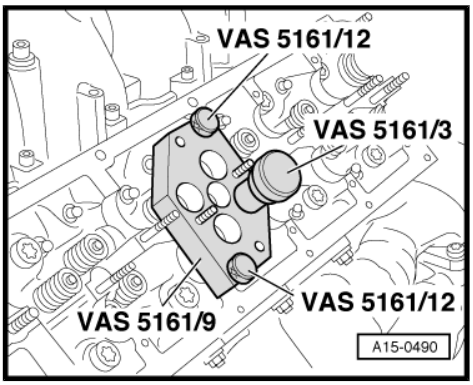

– Screw sealing pin -VAS 5161/10- into guide plate.

– Screw adapter -VAS 5161/11- into corresponding glow plug thread such that it is hand-tight.

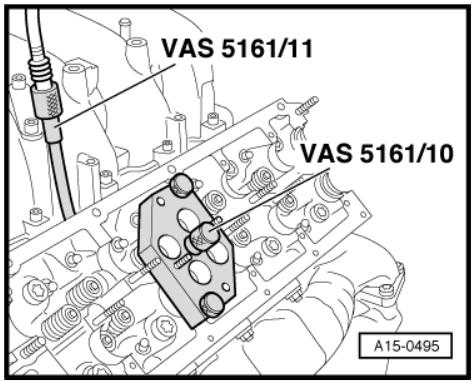

– Screw snap-in device -VAS 5161/6- with engaging fork -VAS 5161/5- into guide plate .

– Slip knurled spacer ring -VAS 5161/17- onto assembly cartridge -VAS 5161/8- .

– Connect adapter -VAS 5161/11- by way of a commercially available adapter piece to compressed air supply and constantly apply pressure.

• Minimum pressure: 6 bar

– Engage pressure fork -VAS 5161/2- at snap-in device -VAS 5161/6- and press assembly cartridge downwards.

– At the same time, turn knurled screw of assembly cartridge to the right until tips engage in valve cotters.

– Move knurled screw back and forth slightly. This causes the valve cotters to be pressed apart and enter into the assembly cartridge.

– Release pressure fork.

– Take out assembly cartridge with knurled spacer ring, valve plate and valve spring.

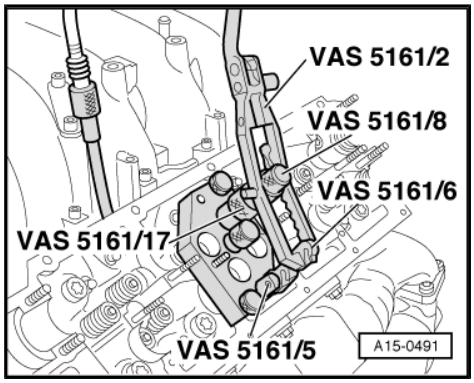

– Detach valve stem seals with valve stem seal puller -3364- .

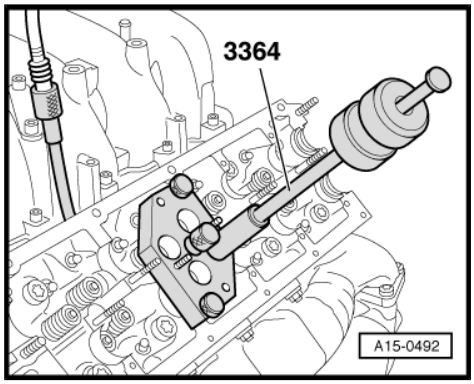

Protected by copyright. Copying for private or commercial purposes, in part or in whole, is not permitted unless authorised by AUDI AG. AUDI AG does not guarantee or accept any liability with respect to the correctness of information in this document. Copyright by AUDI AG.

Proceed as follows if puller -3364- cannot be used on account of confined space with certain valve stem seals:

– Use mandrel to drive out spring pin -arrow- at valve stem seal puller -3364- and detach impact-type extractor attachment.

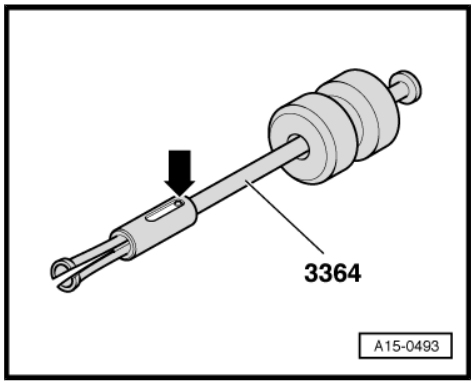

– Position bottom part of puller -3364- at valve stem seal.
– Secure valve stem seal puller with a mandrel or pin punch -1- as shown.
– Apply extractor to valve stem seal puller and detach valve stem seal -arrow-.

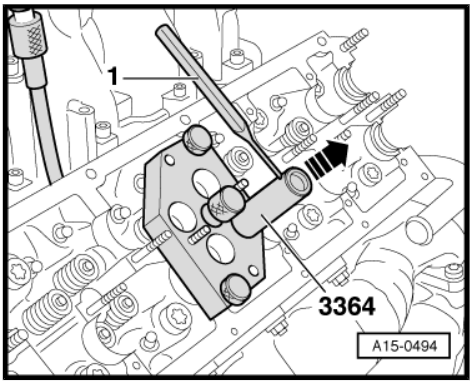

Note

A plastic sleeve -A- is supplied with new valve stem seals.

– Attach plastic sleeve -A- to valve stem so as not to damage new valve stem seals -B-.

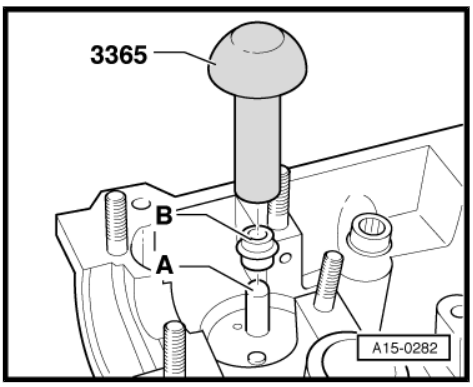

Note

The illustration shows the procedure in schematic form without further tools.

– Lightly lubricate sealing lip of valve stem seal.
– Slip valve stem seal onto plastic sleeve.
– Use pressing-on tool -3365- to carefully press valve stem seal onto valve guide.
– Detach plastic sleeve -B- again.

– If the valve cotters have been removed from the assembly cartridge , they must first be inserted in the valve insertion device -VAS 5161/18- .

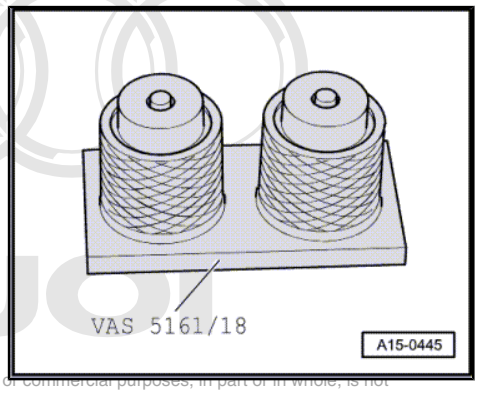

Note

The large diameter of the valve cotters faces upwards.

– Press assembly cartridge from above onto insertion device and pick up valve cotters.

Protected by copyright. Copying for private or commercial purposes, in part or in whole, is not permitted unless authorised by AUDI AG. AUDI AG does not guarantee or accept any liability with respect to the correctness of information in this document. Copyright by AUDI AG.

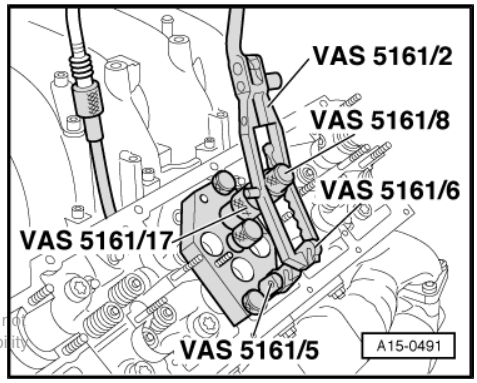

– Re-insert assembly cartridge -VAS 5161/8- in guide plate .
– Press down pressure fork and pull up knurled screw whilst turning to left and right. This inserts the valve cotters.
– Relieve pressure on pressure fork whilst still pulling knurled screw.
– Install camshafts ⇒ page 132 .
– Fit glow plugs ⇒ Rep. Gr. 28 .

Protected by copyright. Copying for private or commercial purposes, in part or in whole, is not permitted unless authorised by AUDI AG. AUDI AG does not guarantee or accept any liability with respect to the correctness of information in this document. Copyright by AUDI AG.

Note

- *The engine is not to be started for approx. 30 minutes after fitting the camshaft. Hydraulic valve lifters must be allowed to settle (valves would otherwise strike piston).*
- *After working on valve gear, carefully crank engine at least twice to ensure that no valves make contact on starting.*

2.6 Checking hydraulic valve lifters

Note

- *Hydraulic valve lifters cannot be serviced.*
- *Irregular valve noise on starting is normal.*

Special tools and workshop equipment required

- Feeler gauge
- Wooden/plastic wedge

Sequence of operations

– Start engine and leave it running until coolant temperature has reached approx. 80 °C.
– Increase engine speed for 2 minutes to approx. 2500 rpm. Perform test drive if applicable.

Note

If the irregular valve noise disappears but repeatedly re-occurs when driving short distances, the oil retention valves must be replaced. Fitting location of oil retention valves: In cylinder block beneath intake manifold ⇒ page 159

If the hydraulic valve lifters are still noisy, determine defective lifter as follows:

– Remove cylinder head cover: Left ⇒ page 84 , right ⇒ page 91 .
– Turn crankshaft until cams of cylinder to be tested are facing upwards.
– Determine clearance between cam and rocker finger.
– Use wooden or plastic wedge to press down rocker finger.

If a 0.20 mm feeler gauge can be inserted between camshaft and rocker finger:

– Replace hydraulic valve lifter ⇒ “2.4 Removing and installing camshafts ”, page 131 .

Note

- *The engine is not to be started for approx. 30 minutes after fitting the camshafts. Hydraulic valve lifters must be allowed to settle (valves would otherwise strike piston).*
- *After working on valve gear, carefully crank engine at least twice to ensure that no valves make contact on starting.*

2.7 Valve dimensions

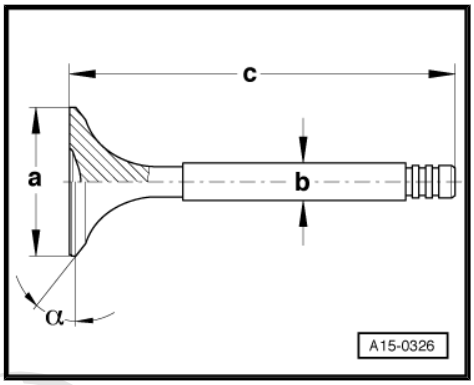

Note

Inlet and exhaust valves are not to be reworked. Only grinding-in is permissible.

Dimension		Inlet valve	Exhaust valve
∅ a	mm	27,00 … 27,20	24,00 … 24,20
∅ b	mm	5,968 … 5,982	5,958 … 5,972
c	mm	98,95 … 99,25	98,95 … 99,25
α	∠°	45 … 45° 20'	45 … 45° 20'

2.8 Checking valve guides

Special tools and workshop equipment required

- Universal dial gauge holder -VW 387-

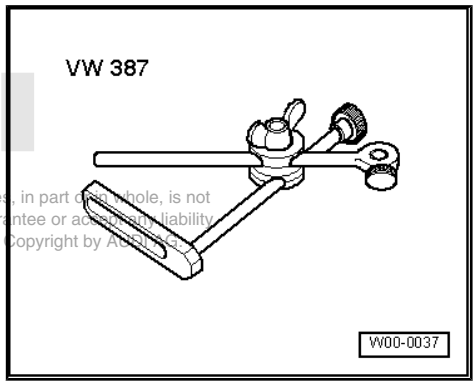

Protected by copyright. Copying for private or commercial purposes, in part or in whole, is not permitted unless authorised by AUDI AG. AUDI AG does not guarantee or accept any liability with respect to the correctness of information in this document. Copyright by AUDI AG.

- Dial gauge -VAS 6079-

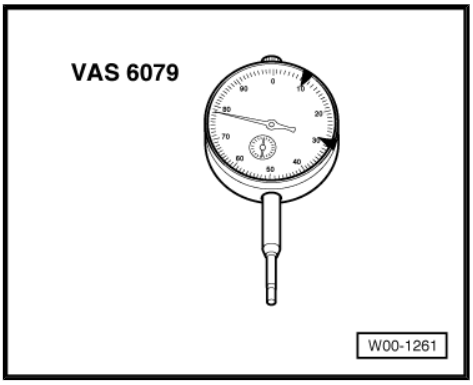

Test sequence

– Insert valve in valve guide.

• End of valve stem must be flush with valve guide.

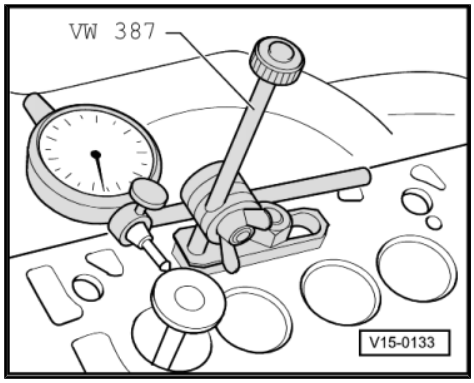

Note

On account of differing stem diameters, only use inlet valve in inlet valve guide and exhaust valve in exhaust valve guide.

– Determine amount of sideways play.

• Inlet and exhaust valve guide wear limit: 1.0 mm

Note

♦ *If the wear limit is exceeded, repeat measurement with new valves. Replace cylinder head if the wear limit is still exceeded. The valve guides cannot be replaced.*

♦ *If valve is replaced in the course of repair work, use new valve for measurement.*

2.9 Checking valves

– Perform visual inspection for scoring at stem and seat area.

In the event of obvious scoring:

– Replace corresponding valve.

Protected by copyright. Copying for private or commercial purposes, in part or in whole, is not permitted unless authorised by AUDI AG. AUDI AG does not guarantee or accept any liability with respect to the correctness of information in this document. Copyright by AUDI AG.

17 – Lubrication

1 Removing and installing lubrication system components

Note

- *If large quantities of metal swarf or abrasion particles are found in the engine oil when performing engine repairs, the oil ducts must be carefully cleaned and the oil cooler additionally replaced so as to prevent further damage.*
- *The oil level must not exceed the max. mark as otherwise the catalytic converter could be damaged.*

Viscosity classes and oil specifications ⇒ Maintenance ; Booklet 403

Oil capacities ⇒ Maintenance tables

1.1 Exploded view of oil pump, bottom part of sump

1 - 10 Nm
- ❑ Tighten diagonally and in stages

2 - Bottom part of sump
- ❑ Removing and installing ⇒ page 142
- ❑ Tighten oil level sender with spacer to 10 Nm

3 - 10 Nm

4 - Baffle plate

5 - Chain sprocket for oil pump
- ❑ Installation position: Labelling facing rear
- ❑ Removing and installing ⇒ "1.3 Removing and installing chain drive for oil pump", page 145

6 - 34.5 Nm

7 - Gasket
- ❑ Before fitting gasket, apply thin coat of sealant to transitions between top part of sump and cylinder block; sealant ⇒ Parts catalogue
- ❑ Replace

8 - 10 Nm

9 - Front sealing flange
- ❑ Removing and installing ⇒ page 66

10 - Screw plug - 22.5 Nm
- ❑ Only available together with oil seal ⇒ Item 11 (page 141)

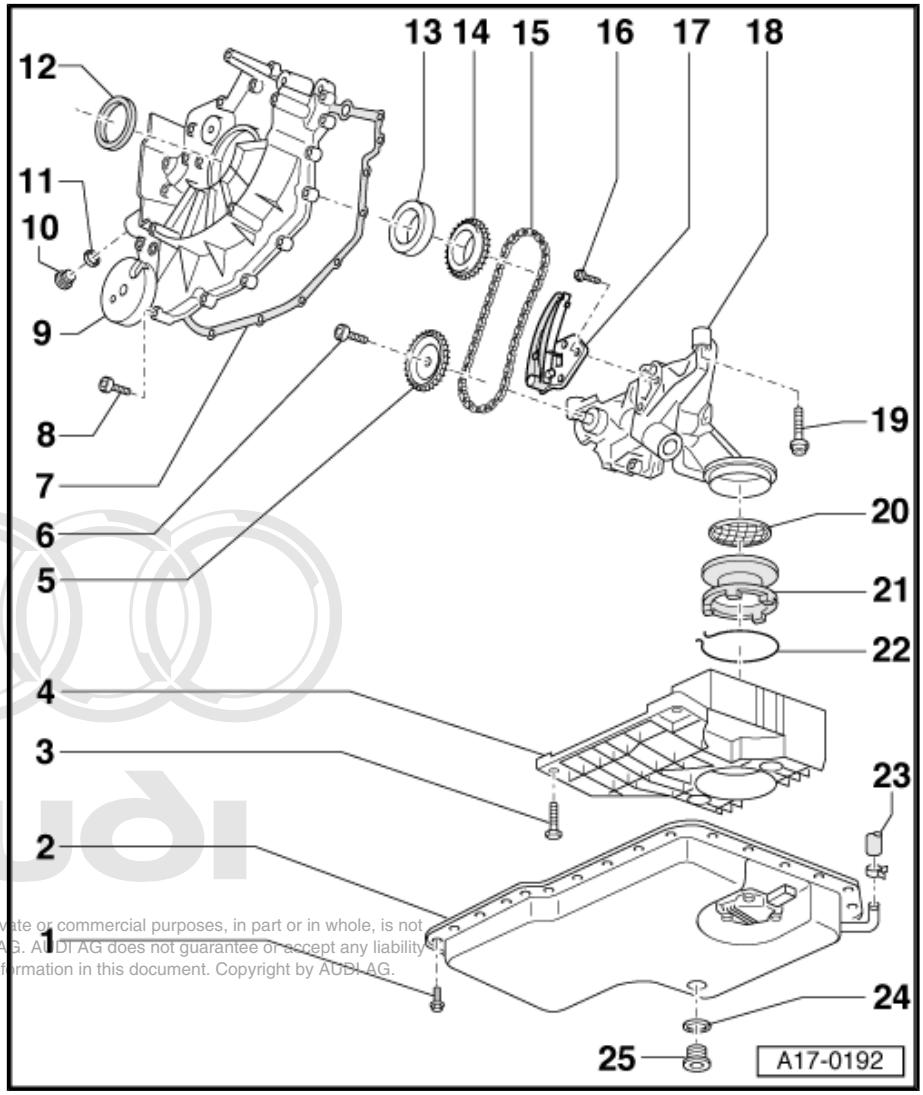

Protected by copyright. Copying for private or commercial purposes, in part or in whole, is not permitted unless authorised by AUDI AG. AUDI AG does not guarantee or accept any liability with respect to the correctness of information in this document. Copyright by AUDI AG.

11 - Oil seal

- ❑ Only available together with screw plug ⇒ Item 10 (page 141)

12 - Oil seal

- ❑ For crankshaft
- ❑ Replacing ⇒ page 64

13 - Thrust washer

- ❑ Detach if scored and turn or replace ⇒ page 64
- ❑ Detach from crankshaft by hand

14 - Chain sprocket

- ❑ Installation position: Labelled side facing forwards
- ❑ Removing and installing ⇒ “1.3 Removing and installing chain drive for oil pump”, page 145

15 - Drive chain for oil pump

- ❑ Removing and installing ⇒ “1.3 Removing and installing chain drive for oil pump”, page 145

16 - 10 Nm

17 - Chain tensioner

- ❑ Secure with setting pin -T40011- before removing
- ❑ Do not dismantle
- ❑ Removing and installing ⇒ “1.3 Removing and installing chain drive for oil pump”, page 145

18 - Oil pump

- ❑ Do not dismantle
- ❑ With relief valve 5.6 bar
- ❑ Removing and installing ⇒ page 146

19 - 30 Nm

20 - Oil screen

- ❑ Clean if contaminated

21 - Inlet connection

22 - Tensioning ring

23 - Return hose

- ❑ From crankcase breather

24 - Oil seal

- ❑ Replace

25 - Oil drain plug - 50 Nm

1.2 Removing and installing bottom part of sump

Special tools and workshop equipment required

Protected by copyright. Copying for private or commercial purposes, in part or in whole, is not permitted unless authorised by AUDI AG. AUDI AG does not guarantee or accept any liability with respect to the correctness of information in this document. Copyright by AUDI AG.

- Used oil collector and extractor -V.A.G 1782- or -V.A.G 1358 A-

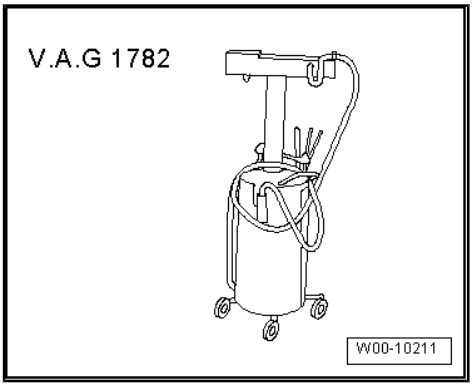

- Hand drill with plastic brush attachment
- Safety goggles
- Sealant ⇒ Parts catalogue

Removing

– On vehicles with auxiliary heater, screw out bolts -arrows- for attaching exhaust pipe of auxiliary/supplementary heater to noise insulation.

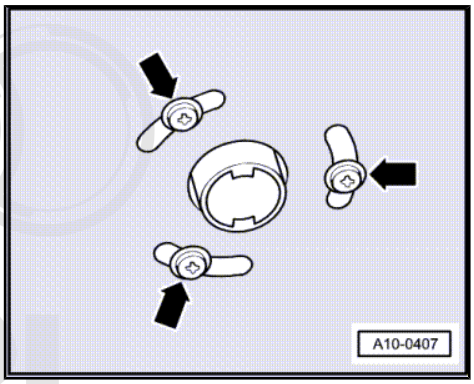

– Unfasten quick-release fasteners -1- and detach front noise insulation.

– Place used oil collector and extractor -V.A.G 1782- or -V.A.G 1358 A- beneath engine.

– Drain off engine oil.

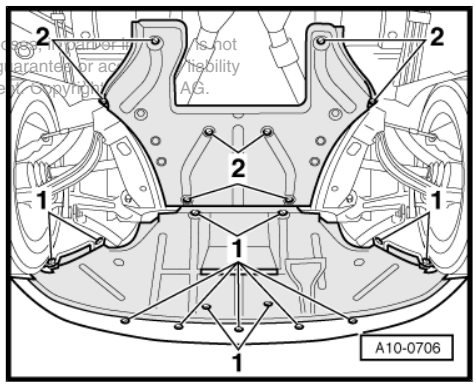

– Unplug connector -1- at oil gauge sender.

– Detach crankcase breather return hose -2-.

– Unscrew bottom part of sump -arrow-.

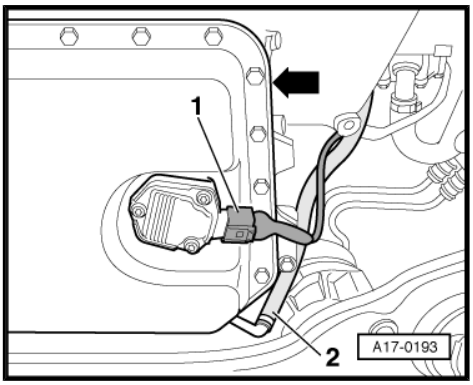

Protected by copyright. Copying for private or commercial purposes, in part or in whole, is not permitted unless authorised by AUDI AG. AUDI AG does not guarantee or accept any liability with respect to the correctness of information in this document. Copyright by AUDI AG.

Installing

Install in reverse order; paying attention to the following:

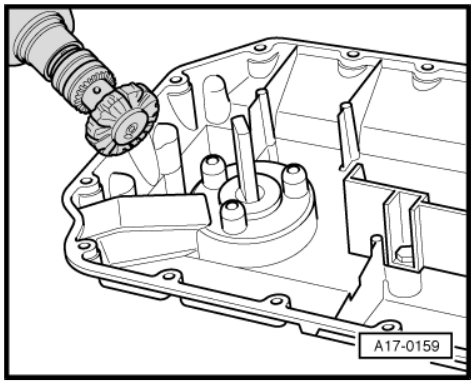

Note

Replace gaskets and seals.

– Use rotating plastic brush for example to remove sealant remnants at bottom and top part of sump.

WARNING

Wear safety goggles.

– Clean sealing surfaces; surfaces must be free from oil and grease.

– Cut off tube nozzle at front mark (∅ of nozzle approx. 3 mm).

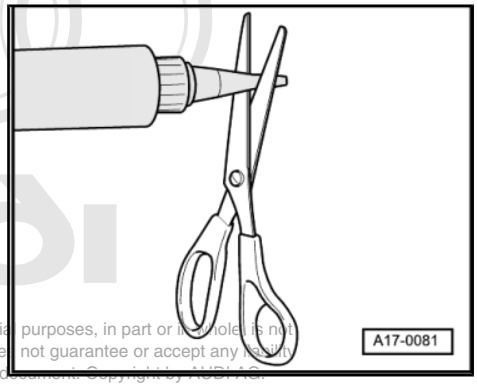

Protected by copyright. Copying for private or commercial purposes, in part or in whole, is not permitted unless authorised by AUDI AG. AUDI AG does not guarantee or accept any liability with respect to the correctness of information in this document. Copyright by AUDI AG.

– Apply sealant bead -arrow- as shown to clean sealing surface of bottom part of sump.

• Thickness of sealant bead: 2 … 3 mm

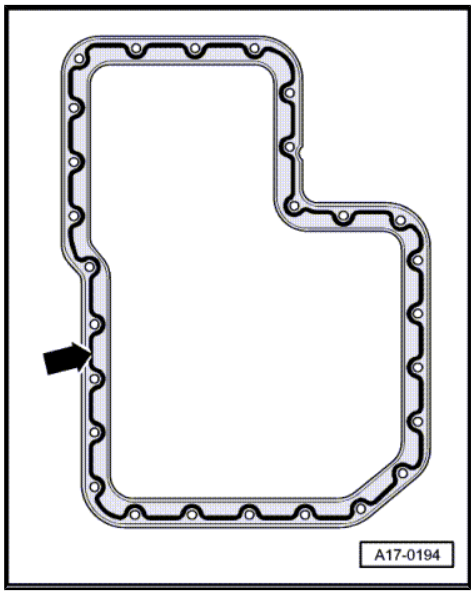

Note

♦ *The sealant bead must not be thicker than indicated, as otherwise surplus sealant could ingress into the sump and clog the oil pump screen.*

♦ *After applying the sealant, the bottom part of the sump must be fitted within 5 minutes.*

– Fit bottom part of sump in position and pre-tighten all bolts diagonally to 5 Nm.

– Diagonally tighten bolts for bottom part of sump.

– Pour in engine oil and check oil level ⇒ page 161 .

Tightening torques

Component	Nm
Bottom part of sump to top part	10
Oil drain plug	50
Hose clamps	2

1.3 Removing and installing chain drive for oil pump

Special tools and workshop equipment required

- Pin wrench -3212-

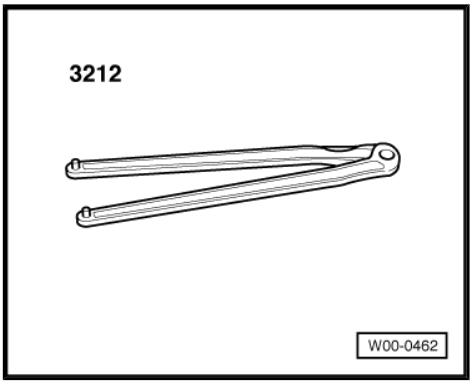

- Setting pin -T40011-

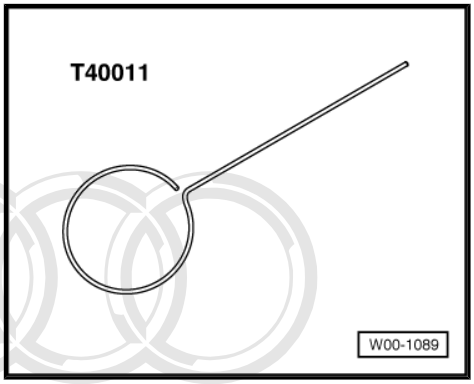

Removing

– Remove front sealing flange ⇒ page 66 .
– Secure chain tensioner for oil pump with setting pin -T40011- .
– Screw out bolts -arrows- at chain tensioner.
– Detach chain tensioner.

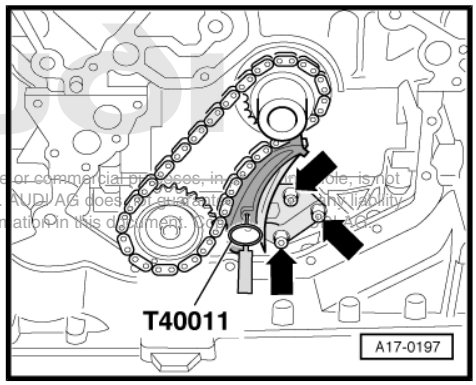

Protected by copyright. Copying for private or commercial purposes, in part or in whole, is not permitted unless authorised by AUDI AG. AUDI AG does not guarantee or assume any liability with respect to the correctness of information in this document.

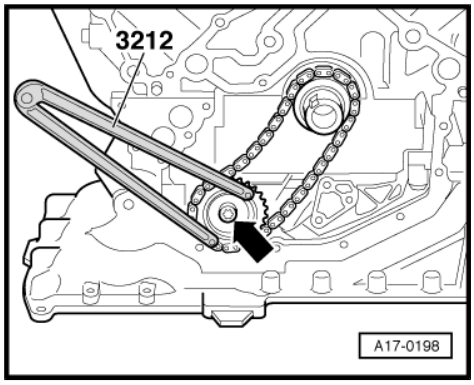

– Use pin wrench -3212- to provide support for chain sprocket of oil pump.
– Screw out bolt -arrow-.
– Detach chain sprocket with chain from oil pump.
– If necessary, detach drive chain sprocket by hand from crankshaft.

Installing

Install in reverse order; paying attention to the following:

– Heed installation position of crankshaft drive chain sprocket.
• Installation position: Labelling facing forwards
– Heed installation position of oil pump chain sprocket.
• Installation position: Labelling facing rear
– Install front sealing flange ⇒ page 66 .

Tightening torques

Component	Nm
Chain sprocket to oil pump	34,5
Chain tensioner to oil pump	10

1.4 Removing and installing oil pump

Removing

– Remove bottom part of sump ⇒ page 142 .
– Remove oil pump chain drive ⇒ page 145 .
– Unscrew baffle plate -arrows-.

Protected by copyright. Copying for private or commercial purposes, in part or in whole, is not permitted unless authorised by AUDI AG. AUDI AG does not guarantee or accept any liability with respect to the correctness of information in this document. Copyright by AUDI AG.

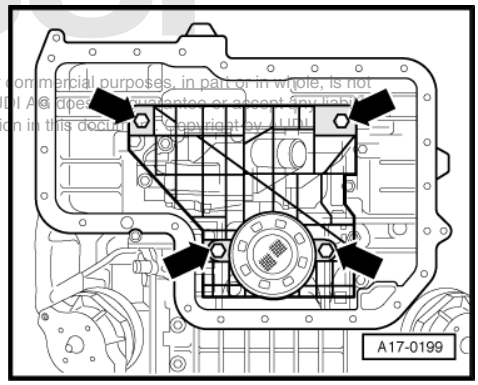

– Unscrew oil pump -arrows-.

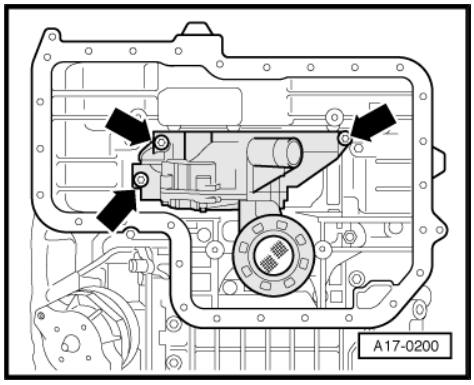

Installing

Install in reverse order; paying attention to the following:

– Install oil pump chain drive ⇒ page 146 .
– Install bottom part of sump ⇒ page 144 .

Tightening torques

Component	Nm
Oil pump to top part of sump	30
Baffle plate to top part of sump	10

1.5 Exploded view of top part of sump

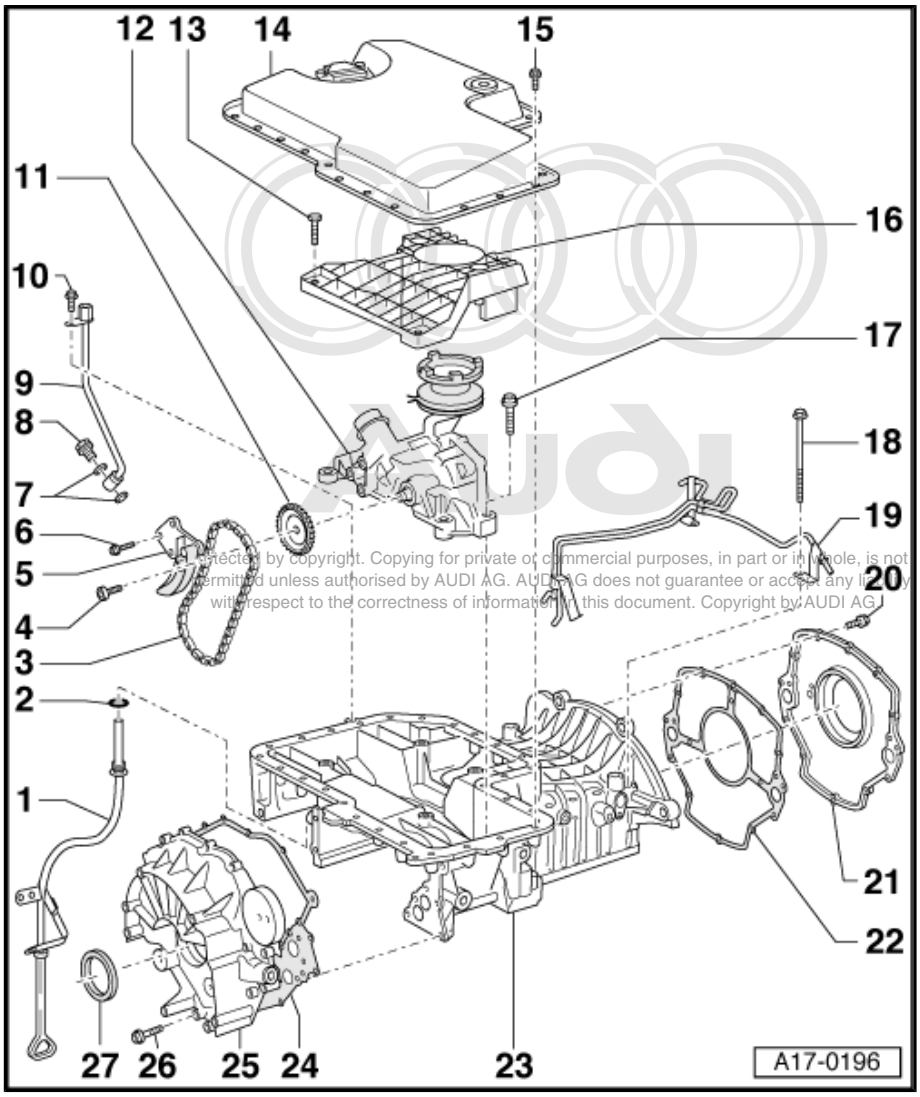

Protected by copyright. Copying for private or commercial purposes, in part or in whole, is not permitted unless authorised by AUDI AG. AUDI AG does not guarantee or accept any liability with respect to the correctness of information in this document. Copyright by AUDI AG.

1 - Guide tube for dipstick
- ❑ Tighten to 10 Nm

2 - O-ring
- ❑ Replace

3 - Drive chain for oil pump
- ❑ Removing and installing ⇒ "1.3 Removing and installing chain drive for oil pump", page 145

4 - 34.5 Nm

5 - Chain tensioner
- ❑ Secure with setting pin - T40011- before removing
- ❑ Do not dismantle
- ❑ Removing and installing ⇒ "1.3 Removing and installing chain drive for oil pump", page 145

6 - 10 Nm

7 - Oil seals
- ❑ Replace

8 - 32.5 Nm

9 - Coolant drain pipe

10 - 10 Nm

11 - Chain sprocket for oil pump
- ❑ Installation position: Labelling facing rear
- ❑ Removing and installing ⇒ "1.3 Removing and installing chain drive for oil pump", page 145

12 - Oil pump
- ❑ Do not dismantle
- ❑ With relief valve 5.6 bar
- ❑ Removing and installing ⇒ page 146

13 - 10 Nm

14 - Bottom part of sump
- ❑ Removing and installing ⇒ page 142

15 - 10 Nm
- ❑ Tighten diagonally and in stages

16 - Baffle plate

17 - 30 Nm

18 - 14 Nm

19 - Vacuum pipe
- ❑ For charge pressure control

20 - 10 Nm

21 - Rear sealing flange with oil seal

- ❑ Oil seal cannot be replaced separately
- ❑ Removing and installing ⇒ page 69

22 - Gasket

- ❑ Replace
- ❑ Before fitting gasket, apply thin coat of sealant to transitions between top part of sump and cylinder block; sealant ⇒ Parts catalogue

23 - Top part of sump

- ❑ Removing and installing ⇒ page 148

24 - Gasket

- ❑ Replace
- ❑ Before fitting gasket, apply thin coat of sealant to transitions between top part of sump and cylinder block; sealant ⇒ Parts catalogue

25 - Front sealing flange

- ❑ Removing and installing ⇒ page 66

26 - 10 Nm

27 - Oil seal

- ❑ For crankshaft
- ❑ Removing and installing ⇒ page 64

1.6 Removing and installing top part of sump

Special tools and workshop equipment required

- ♦ Sealant ⇒ Parts catalogue
- ♦ Hand drill with plastic brush attachment
- ♦ Safety goggles

Removing

- • Engine attached to repair stand ⇒ page 26
- – Remove rear sealing flange ⇒ page 69 .
- – Remove oil pump ⇒ page 146 .
- – Remove turbochargers: Left ⇒ page 239 , right ⇒ page 243 .
- – Remove oil filter bracket with oil cooler ⇒ page 152 .
- – Unscrew and lift off guide tube for dipstick at cylinder head -arrow-.
- – Remove charge pressure control solenoid valves at left engine support ⇒ page 227 .
- – Unscrew hydraulic pump ⇒ Item 16 (page 35) .
- – Unscrew holder for hydraulic pump and air conditioner compressor ⇒ Item 13 (page 35) .
- – Remove left engine support.
- – Unscrew left coolant drain pipe ⇒ Item 9 (page 147) .

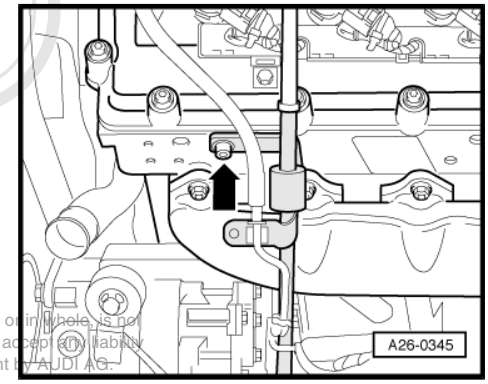

Protected by copyright. Copying for private or commercial purposes, in part or in whole, is not permitted unless authorised by AUDI AG. AUDI AG does not guarantee or accept any liability with respect to the correctness of information in this document. Copyright by AUDI AG.

– Screw out bolts -1- for top part of sump.
– Press top part of sump off spring pins of cylinder block.

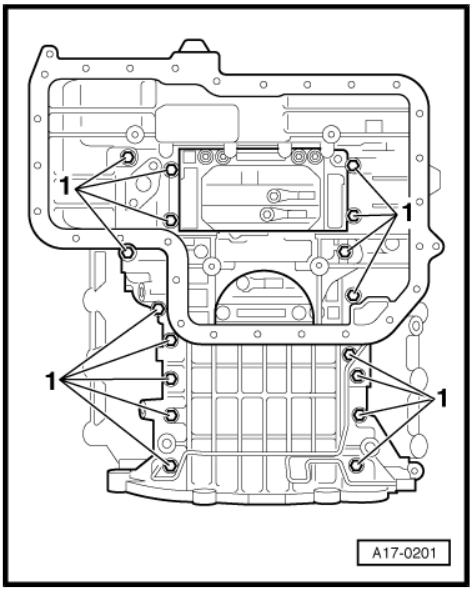

Installing

Install in reverse order; paying attention to the following:

Note

Replace gaskets, oil seals and O-rings.

Protected by copyright. Copying for private or commercial purposes, in part or in whole, is not permitted unless authorised by AUDI AG. AUDI AG does not guarantee or accept any liability with respect to the correctness of information in this document. Copyright by AUDI AG.

– Use rotating plastic brush for example to remove sealant remnants at top part of sump and cylinder block.

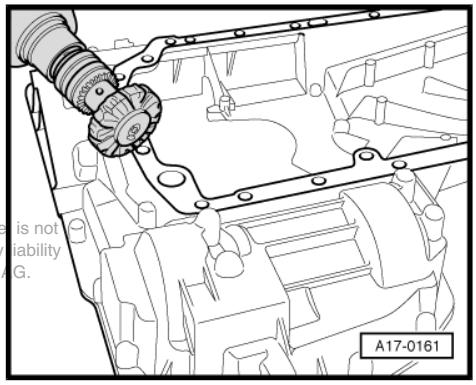

WARNING

Wear safety goggles.

– Clean sealing surfaces; surfaces must be free from oil and grease.

– Cut off tube nozzle at front mark (∅ of nozzle approx. 3 mm).

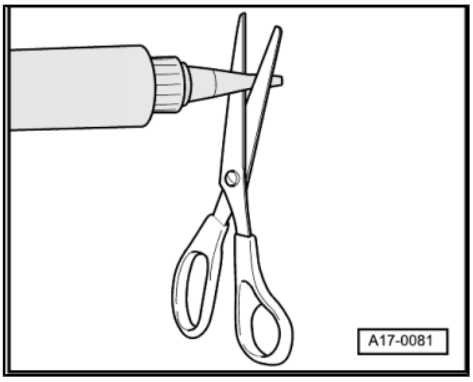

– Apply sealant beads -1 ... 3- as shown to clean sealing surfaces of top part of sump.

• The sealant beads must project 2 … 3 mm beyond the sealing surface.

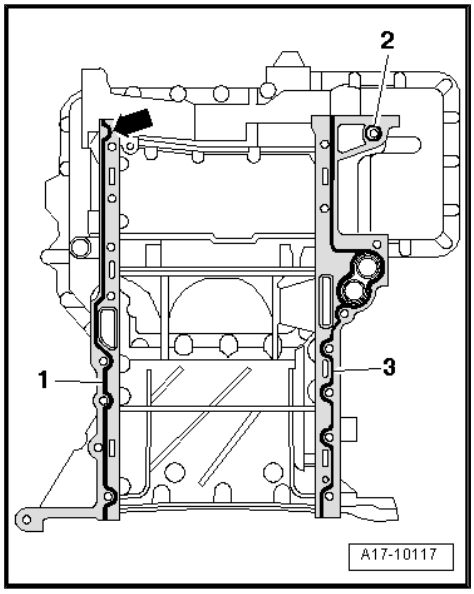

Note

- *The sealant beads must not be thicker than indicated, as otherwise surplus sealant could ingress into the sump and clog the oil pump screen.*
- *After applying the sealant, the top part of the sump must be fitted within 5 minutes.*
- *Apply the sealant bead -1- with an inner radius -arrow- as shown. There is a bore in the cylinder block in this area.*

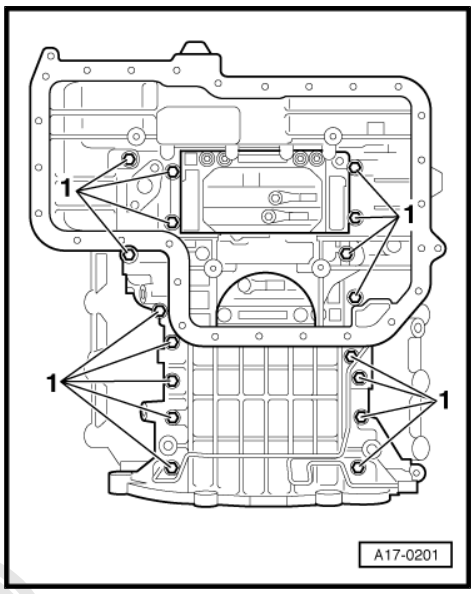

– Fit top part of sump in position and pre-tighten all bolts for top part of sump/cylinder block diagonally to 5 Nm.

– Tighten bolts -1- for top part of sump/cylinder block diagonally to 14 Nm.

– Install oil pump ⇒ page 146 .

– Install front sealing flange ⇒ page 66 .

– Install rear sealing flange ⇒ page 69 .

– Fit drive plate ⇒ page 70 .

– Install bottom part of sump ⇒ page 144 .

– Install oil filter bracket with oil cooler ⇒ page 152 .

– Install turbochargers: Left ⇒ page 239 , right ⇒ page 243 .

– Install engine ⇒ page 26 .

– Pour in engine oil and check oil level ⇒ page 161 .

Tightening torques

Component		Nm
Top part of sump to cylinder block		14
Holder for hydraulic pump and air conditioner compressor to engine		40
Hydraulic pump to holder		22
Left engine support to cylinder block		42
Coolant drain pipe to	Top part of sump	10
	Cylinder block	32,5
Guide tube for dipstick to left cylinder head		10

Protected by copyright. Copying for private or commercial purposes, in part or in whole, is not permitted unless authorised by AUDI AG. AUDI AG does not guarantee or accept any liability with respect to the correctness of information in this document. Copyright by AUDI AG.

1.7 Exploded view of oil filter bracket with oil cooler

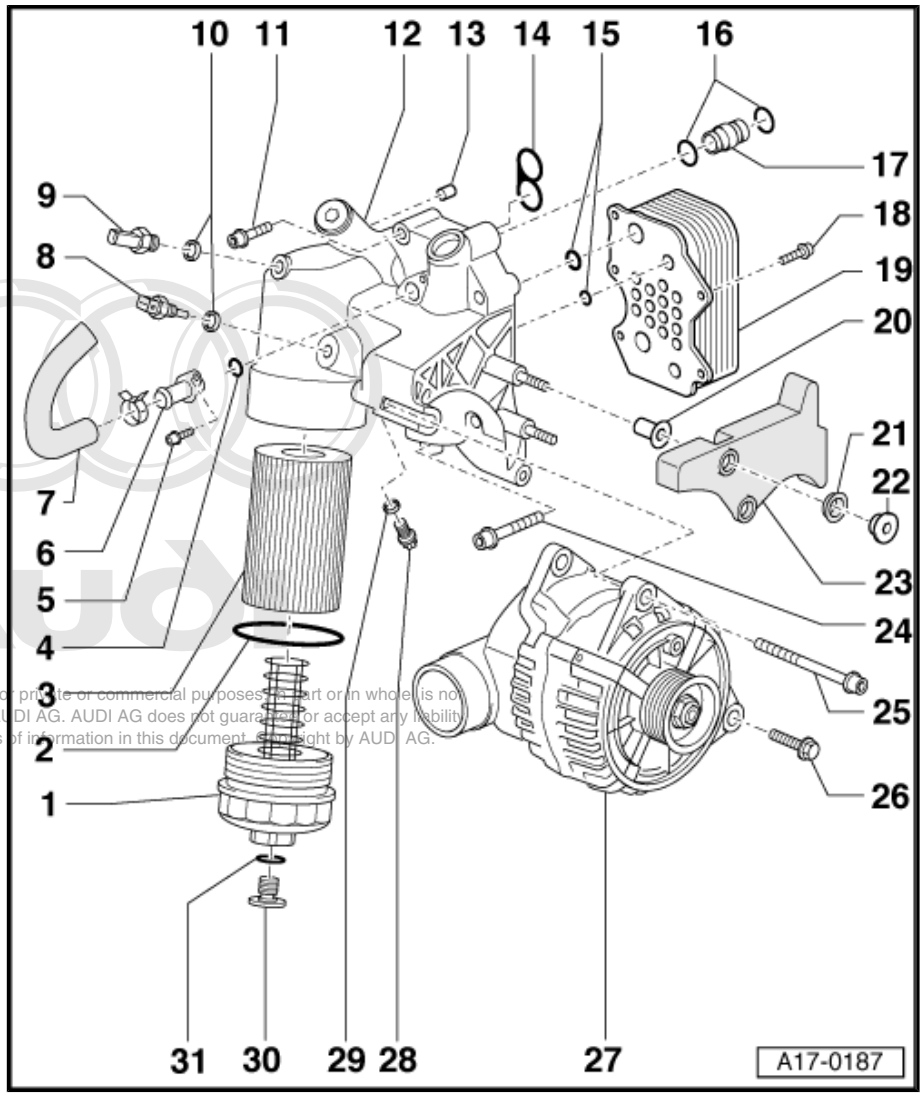

Protected by copyright. Copying for private or commercial purposes, in part or in whole, is not permitted unless authorised by AUDI AG. AUDI AG does not guarantee or accept any liability with respect to the correctness of information in this document. Copyright by AUDI AG.

1 - Cap - 25 Nm

- ❑ Before unfastening, drain off oil at drain plug ⇒ Item 30 (page 152)
- ❑ Use 36 mm socket wrench for unfastening and tightening

2 - O-ring

- ❑ Replace

3 - Oil filter element

- ❑ Detach from cap ⇒ Item 1 (page 151)
- ❑ Replace O-ring ⇒ Item 2 (page 151) on changing filter
- ❑ Heed replacement intervals ⇒ Maintenance ; Booklet 403

4 - O-ring

- ❑ Replace

5 - 10 Nm

6 - Connection

- ❑ For coolant hose

7 - Coolant hose

8 - Oil temperature sender -G8-

- ❑ Tighten to 15 Nm

9 - Oil pressure switch -F1-

- ❑ Grey insulation
- ❑ Checking ⇒ page 160
- ❑ Tighten to 25 Nm

10 - Oil seal

- ❑ Replace

11 - 22 Nm

12 - Oil filter bracket

- ❑ With filter bypass valve 2.5 bar
- ❑ Removing and installing ⇒ page 152

13 - Dowel sleeve

- ❑ 2x

14 - Gasket

- ❑ Replace

15 - O-rings

- ❑ Replace

16 - O-rings

- ❑ Replace

17 - Intermediate pipe

18 - 4 Nm

19 - Oil cooler
- ❑ With bypass valve 1.45 bar

20 - Bushing
- ❑ Installation position: Collar facing forwards

21 - Rubber grommet

22 - 10 Nm

23 - Cover

24 - 45 Nm

25 - 45 Nm

26 - 22 Nm

27 - Alternator

28 - Coolant drain plug - 10 Nm

29 - Oil seal
- ❑ Replace

30 - Oil drain plug -10 Nm

31 - O-ring
- ❑ Replace

1.8 Removing and installing oil filter bracket with oil cooler

Special tools and workshop equipment required

- ♦ Used oil collector and extractor -V.A.G 1782- or -V.A.G 1358 A-

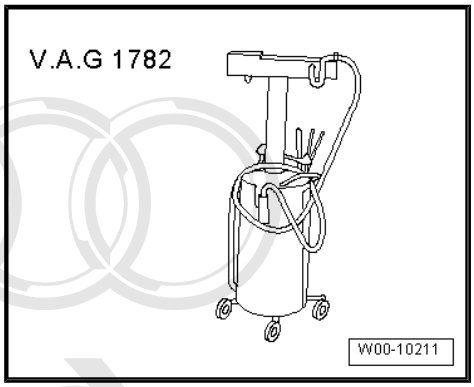

- ♦ Drip tray for workshop cranes -VAS 6208- or -V.A.G 1306-

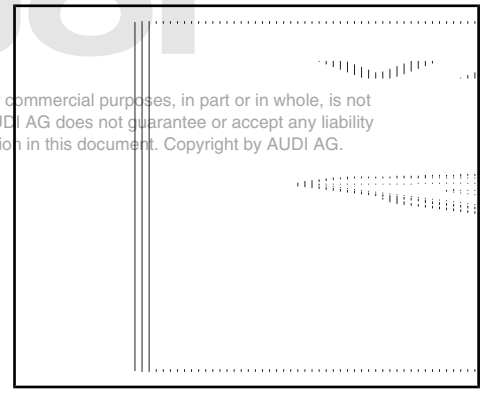

Protected by copyright. Copying for private or commercial purposes, in part or in whole, is not permitted unless authorised by AUDI AG. AUDI AG does not guarantee or accept any liability with respect to the correctness of information in this document. Copyright by AUDI AG.

Removing

- Engine in position

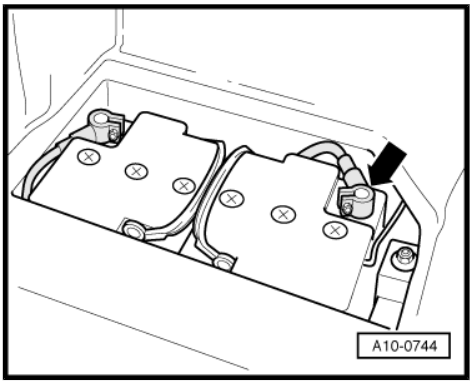

> **Caution**
>
> *On vehicles with telematics system, activate service mode of telematics control unit before disconnecting battery ⇒ Radio, telephone, navigation self-diagnosis; Rep. Gr. 01 .*

– Pay attention to and if necessary establish code for vehicles with encoded radio set/radio navigation system (RNS).

– With ignition switched off, disconnect earth strap/cable at negative terminal -arrow- of battery (in luggage compartment on right beneath cover).

> **WARNING**
>
> *Hot vapour/coolant may escape when opening the expansion tank. Cover the cap with a cloth and open carefully.*

– Open cap of coolant expansion tank.

– On vehicles with auxiliary heater, screw out bolts -arrows- for attaching exhaust pipe of auxiliary/supplementary heater to noise insulation.

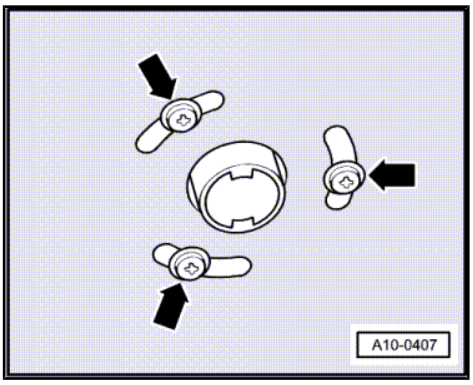

– Unfasten quick-release fasteners -1- and detach front noise insulation.

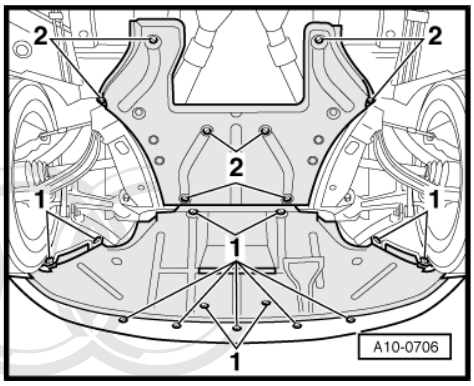

Protected by copyright. Copying for private or commercial purposes, in part or in whole, is not permitted unless authorised by AUDI AG. AUDI AG does not guarantee or accept any liability with respect to the correctness of information in this document. Copyright by AUDI AG.

– Place drip tray for workshop cranes -VAS 6208- or -V.A.G 1306- beneath engine.
– Open drain plugs -1...3- and drain off coolant at engine only.

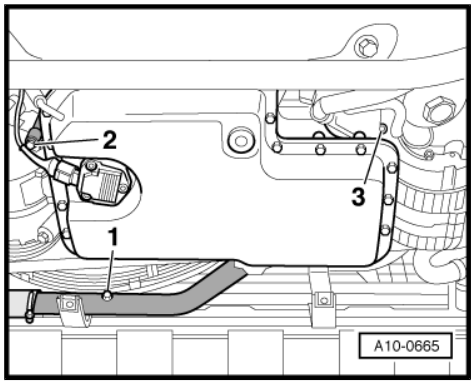

– Unscrew holder for front noise insulation -arrows-.
– Remove coolant pipe at bottom of lock carrier.

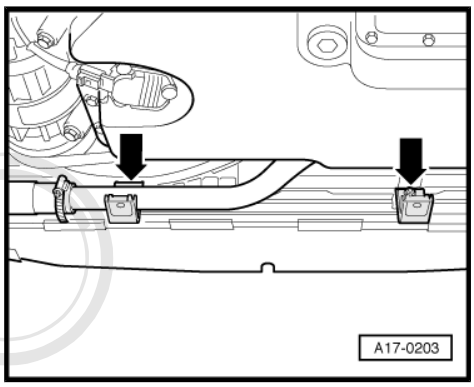

– Detach coolant pump for fuel cooling circuit from retaining pins.

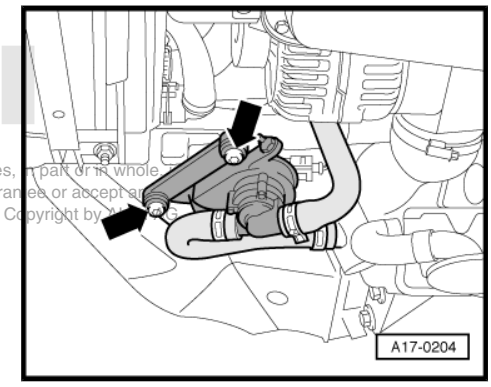

Note

Leave connector and coolant hoses connected.

Protected by copyright. Copying for private or commercial purposes, in part or in whole, is not permitted unless authorised by AUDI AG. AUDI AG does not guarantee or accept any liability with respect to the correctness of information in this document. Copyright by AUDI AG.

– Swivel tensioner in -direction of arrow- to slacken off poly V-belt.

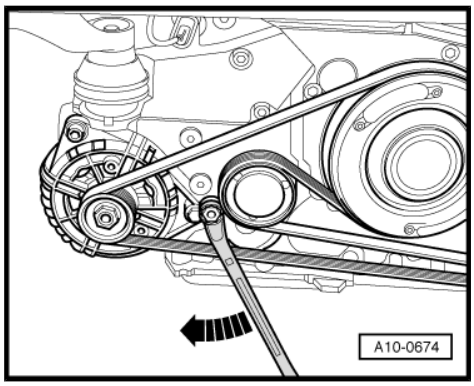

– Lock poly V-belt tensioner in position in locating holes -arrow- by inserting 5 mm Allen key.
– Detach poly V-belt from alternator pulley only.

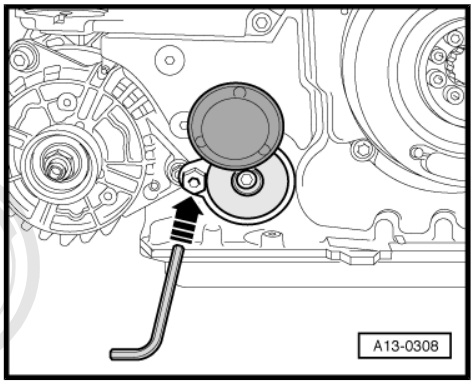

– Unscrew tensioning roller for poly V-belt -arrow-.
– Remove cover behind tensioning roller.

Protected by copyright. Copying for private or commercial purposes, in part or in whole, is not permitted unless authorised by AUDI AG. AUDI AG does not guarantee or accept any liability with respect to the correctness of information in this document. Copyright by AUDI AG.

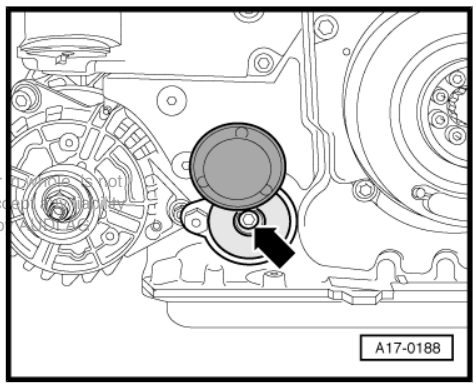

– Detach air duct to alternator -arrow-.
– Detach wires at alternator.

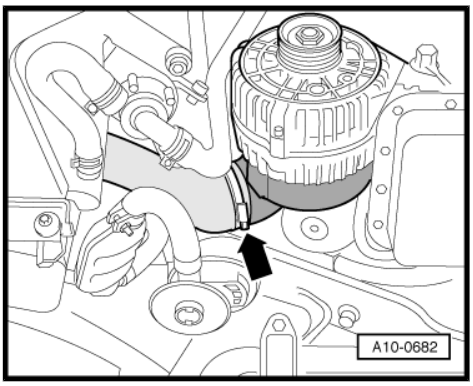

– Screw out bolts -arrows- for alternator.
– Detach alternator.

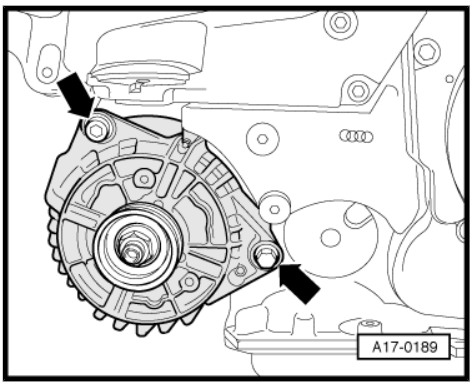

– Unclip cover -2- for air duct at lock carrier.
– Remove air duct -1-.

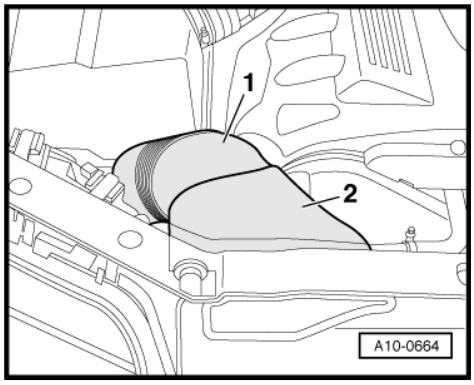

– Detach engine cover -arrows-.

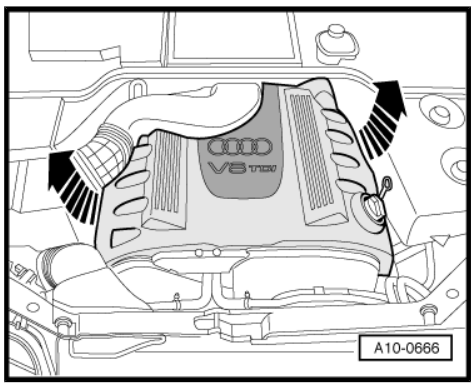

– Remove cover on right in engine compartment -arrows-.

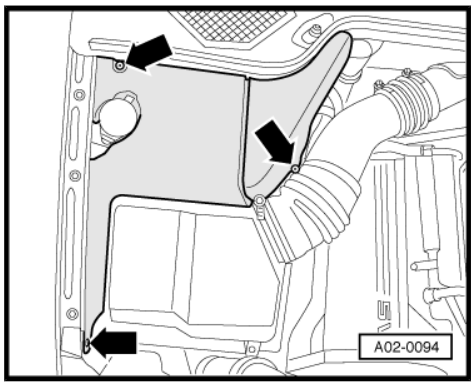

– Unfasten hose clamp -1-.
– Remove air cleaner housing -arrows-.

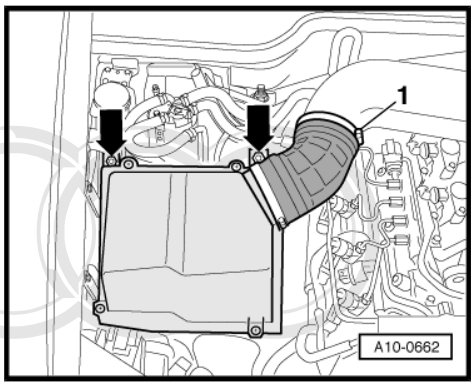

Protected by copyright. Copying for private or commercial purposes, in part or in whole, is not permitted unless authorised by AUDI AG. AUDI AG does not guarantee or accept any liability with respect to the correctness of information in this document. Copyright by AUDI AG.

– Place drip tray for workshop cranes -VAS 6208- or -V.A.G 1306- beneath engine.
– Detach coolant hoses -arrows-.

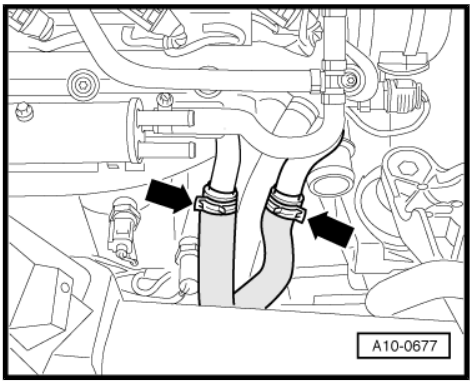

– Screw out oil pressure switch -1-.
– Detach coolant hose -2- at oil filter bracket.

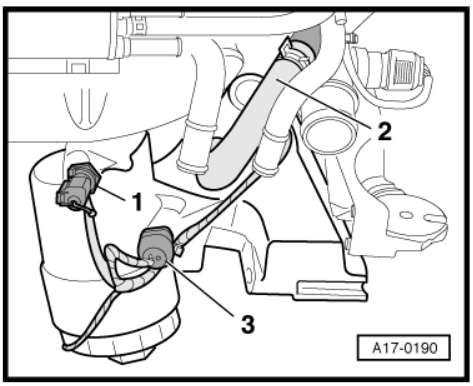

– Screw out bolts -2 … 4-.
– Unscrew wiring harness at right engine support.
– Place used oil collector and extractor -V.A.G 1782- or -V.A.G 1358 A- beneath engine.
– Screw out drain plug -arrow- and drain off engine oil.
– Remove oil filter.
– Screw out bolts -1- and -5-.
– Detach oil filter bracket.
– Detach intermediate pipe ⇒ Item 17 (page 151) from cylinder block.

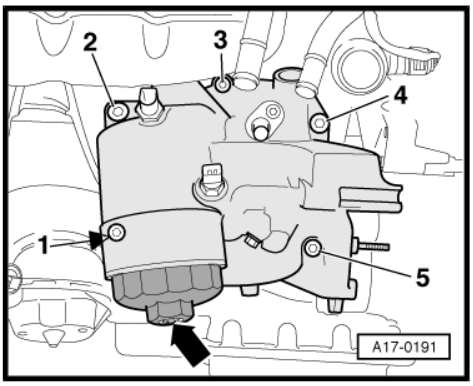

Installing

Install in reverse order; paying attention to the following:

Note

Replace gaskets and seals.

– Pay attention to dowel sleeves on installation.
– Install intermediate pipe ⇒ Item 17 (page 151) .

Protected by copyright. Copying for private or commercial purposes, in part or in whole, is not permitted unless authorised by AUDI AG. AUDI AG does not guarantee or accept any liability with respect to the correctness of information in this document. Copyright by AUDI AG.

– Tighten bolts -1 … 5- for oil filter bracket diagonally and in stages.

– Fit poly V-belt ⇒ page 37 .

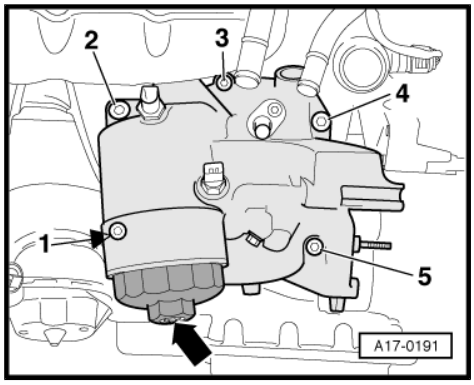

Note

Pay attention to correct positioning on pulleys when fitting poly V-belt.

– Pour in engine oil and check oil level ⇒ page 161 .

– Replace coolant ⇒ page 168 .

Note

- *On re-connecting the battery, remember to activate vehicle equipment (radio/radio navigation system, clock, electric window lifters) in line with owner's manual.*
- *Deactivate service mode of telematics control unit ⇒ Radio, telephone, navigation self-diagnosis; Rep. Gr. 01 .*

Tightening torques

Component		Nm
Oil filter bracket to engine	M8	22
	M10	45
Oil drain plug to cap		10
Oil pressure switch -F1- to oil filter bracket		25
Tensioning roller for poly V-belt to engine		45
Alternator to oil filter bracket	M8	22
	M10	45
Clamps for coolant hoses		2
Clamps for air hoses		3,5

Protected by copyright. Copying for private or commercial purposes, in part or in whole, is not permitted unless authorised by AUDI AG. AUDI AG does not guarantee or accept any liability with respect to the correctness of information in this document. Copyright by AUDI AG.

1.9 Exploded view of oil retention valves and spray nozzle valve

1 - O-ring
- ❑ Replace

2 - Oil retention valve - 20 Nm
- ❑ For oil supply to left cylinder head

3 - Gasket
- ❑ Replace

4 - Cover
- ❑ With connection for crankcase breather

5 - 10 Nm

6 - Rubber buffer
- ❑ For intake manifold

7 - Hose
- ❑ To crankcase breather

8 - Oil retention valve
- ❑ For oil supply to right cylinder head
- ❑ Tighten to 20 Nm

9 - O-ring
- ❑ Replace

10 - Spray nozzle valve
- ❑ For piston cooling
- ❑ Tighten to 20 Nm

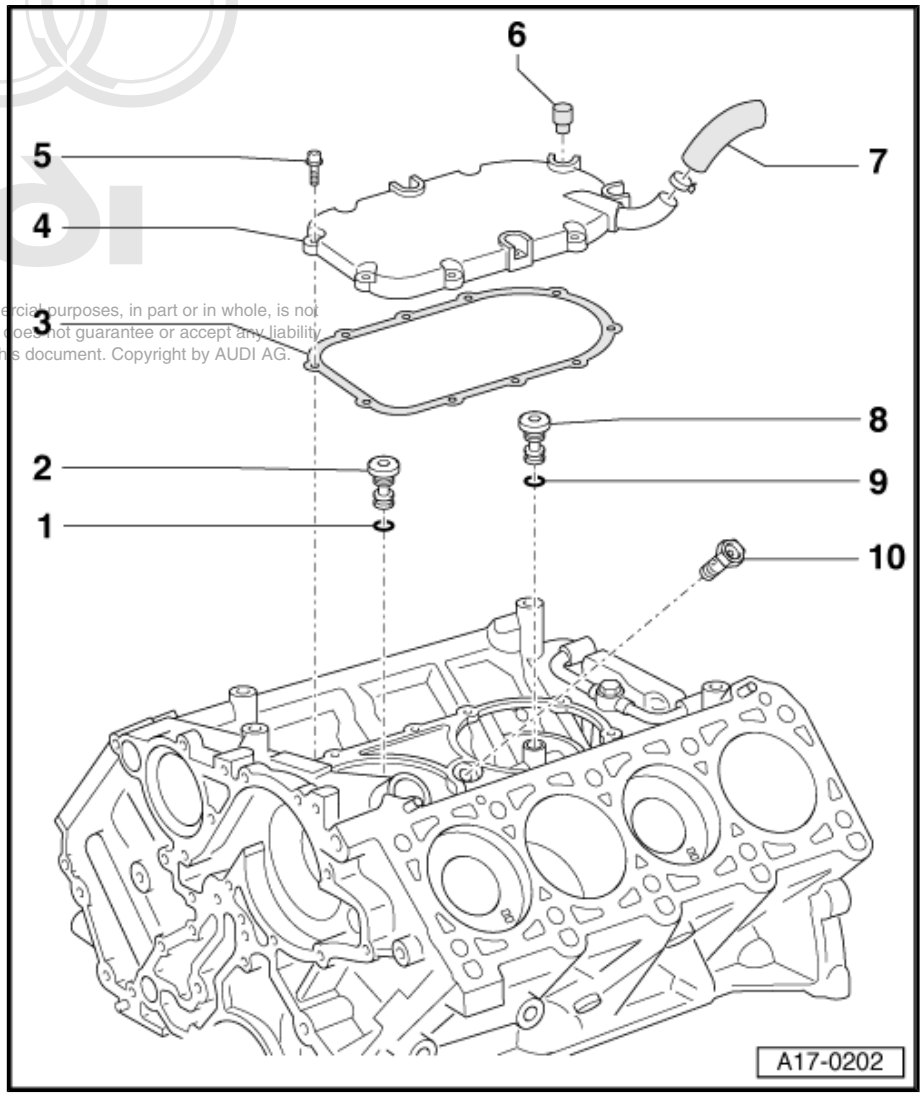

Protected by copyright. Copying for private or commercial purposes, in part or in whole, is not permitted. Unless authorized, AUDI AG does not guarantee or accept any liability with respect to the accuracy of information in this document. Copyright by AUDI AG.

1.10 Replacing oil retention valves and spray nozzle valve

Note

Oil retention valves must be replaced in the event of irregular valve noise which disappears after a lengthy journey and repeatedly re-occurs when driving short distances.

Removing

– Remove intake manifold ⇒ Rep. Gr. 23 .

– Detach hose ⇒ Item 7 (page 159) from cover ⇒ Item 4 (page 159) .

– Unscrew cover beneath intake manifold.

– Screw out oil retention valve/spray nozzle valve.

Installing

Install in reverse order; paying attention to the following:

Note

Replace gaskets and seals.

– Install intake manifold ⇒ Rep. Gr. 23 .

Tightening torques

Component	Nm
Cover to cylinder block	10
Oil retention valve to cylinder block	20
Spray nozzle valve to cylinder block	20

1.11 Checking oil pressure and oil pressure switch

Special tools and workshop equipment required

- Oil pressure tester -V.A.G 1342-
- Voltage tester - V.A.G 1527 B-
- Adapter set -V.A.G 1594 C-

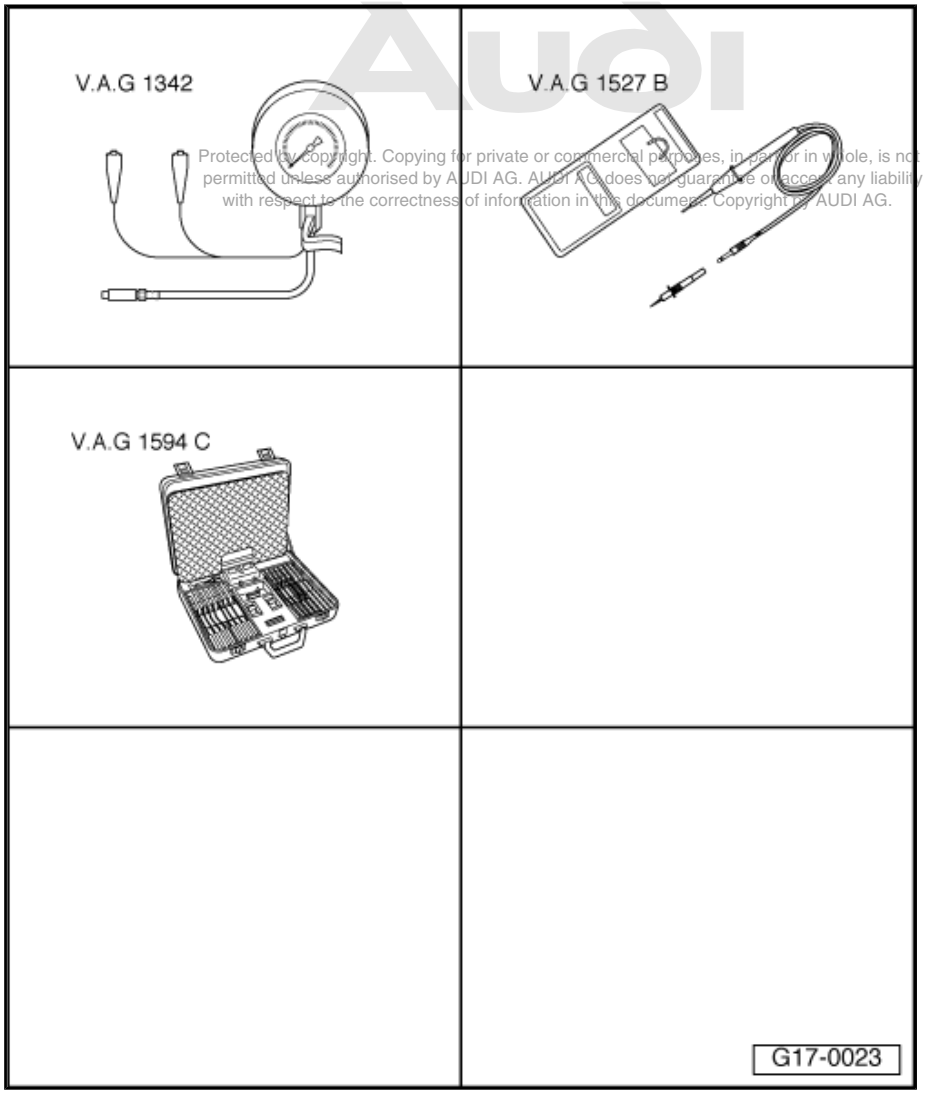

Protected by copyright. Copying for private or commercial purposes, in part or in whole, is not permitted unless authorised by AUDI AG. AUDI AG does not guarantee or accept any liability with respect to the correctness of information in this document. Copyright © AUDI AG.

Test conditions

- Oil level OK

- Display “OK” must light in Auto Check system (call up symbol)
- Engine oil temperature approx. 80 °C

Test preparation

– Disconnect wire at oil pressure switch.

– Screw out oil pressure switch ⇒ Item 9 (page 151) and connect oil pressure tester -V.A.G 1342- at hole for oil pressure switch.

– Screw oil pressure switch -2- into oil pressure tester -V.A.G 1342- .

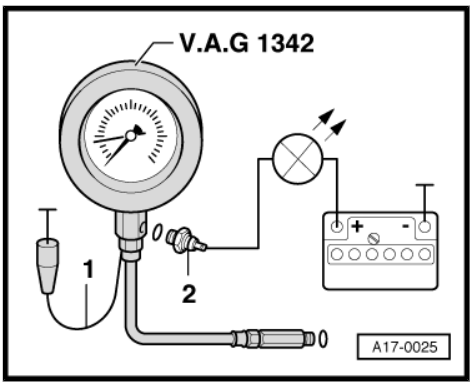

Checking oil pressure switch

– Connect brown wire -1- of oil pressure tester to earth (–).

– Connect voltage tester -V.A.G 1527 B- with test leads from adapter set -V.A.G 1594 C- to oil pressure switch and battery positive (+).

- LED must not light.

If LED already lights:

– Replace oil pressure switch.

– Start engine.

Note

Observe tester and LED on starting, as switching point of oil pressure switch may already be exceeded on starting.

- LED must light at 0.75 … 1.05 bar.

If LED does not light:

– Replace oil pressure switch.

Checking oil pressure

– Start engine.

- Oil pressure at idle: min. 0.8 bar
- Oil pressure at 2000 rpm: min. 2.0 bar
- Oil pressure at higher engine speed: max. 7.0 bar

If readings do not match specifications: Relief valve or oil pump defective

– Replace oil pump ⇒ page 146 .

Assembly

– Install oil pressure switch ⇒ Item 9 (page 151) .

1.12 Engine oil

Viscosity classes and oil specifications ⇒ Maintenance ; Booklet 403

1.13 Checking oil level

Test conditions

This document is copyright. Copying for private or commercial purposes, in part or in whole, is not permitted unless authorised by AUDI AG. AUDI AG does not guarantee or accept any liability with respect to the correctness of information in this document. Copyright by AUDI AG.

- Engine oil temperature min. 60 °C
- Vehicle standing flat
- Wait a few minutes after switching off engine to allow oil to flow back into sump

Test sequence

– Pull out dipstick, wipe with a clean cloth and re-insert as far as it will go.

– Then pull out dipstick again and take oil level reading.

Markings on dipstick:

a - Oil is not to be topped up.

b - Oil can be topped up.

c - Oil must be topped up. It is then sufficient for the oil level to be in area -b- (hatched area).

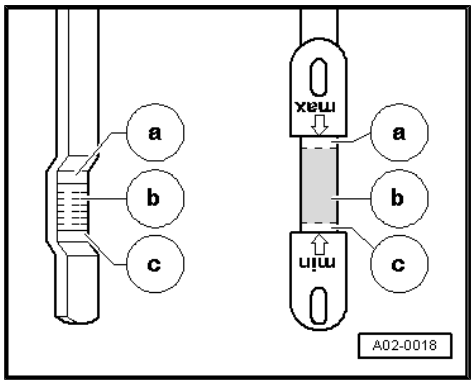

Note

The oil level must not exceed mark -a- on the dipstick.

Protected by copyright. Copying for private or commercial purposes, in part or in whole, is not permitted unless authorised by AUDI AG. AUDI AG does not guarantee or accept any liability with respect to the correctness of information in this document. Copyright by AUDI AG.

1.14 Exploded view of crankcase breather components

1 - Hose

2 - 10 Nm

3 - 10 Nm
- ❑ Self-locking
- ❑ Apply locking fluid when fitting; locking fluid ⇒ Parts catalogue

4 - Pressure control valve
- ❑ For crankcase breather
- ❑ Checking ⇒ page 163

5 - Holder

6 - Hose

7 - From cylinder block

8 - Pipe

9 - 10 Nm

10 - Air pipe

11 - O-ring
- ❑ Replace

12 - 10 Nm

13 - Hose

14 - To bottom part of sump

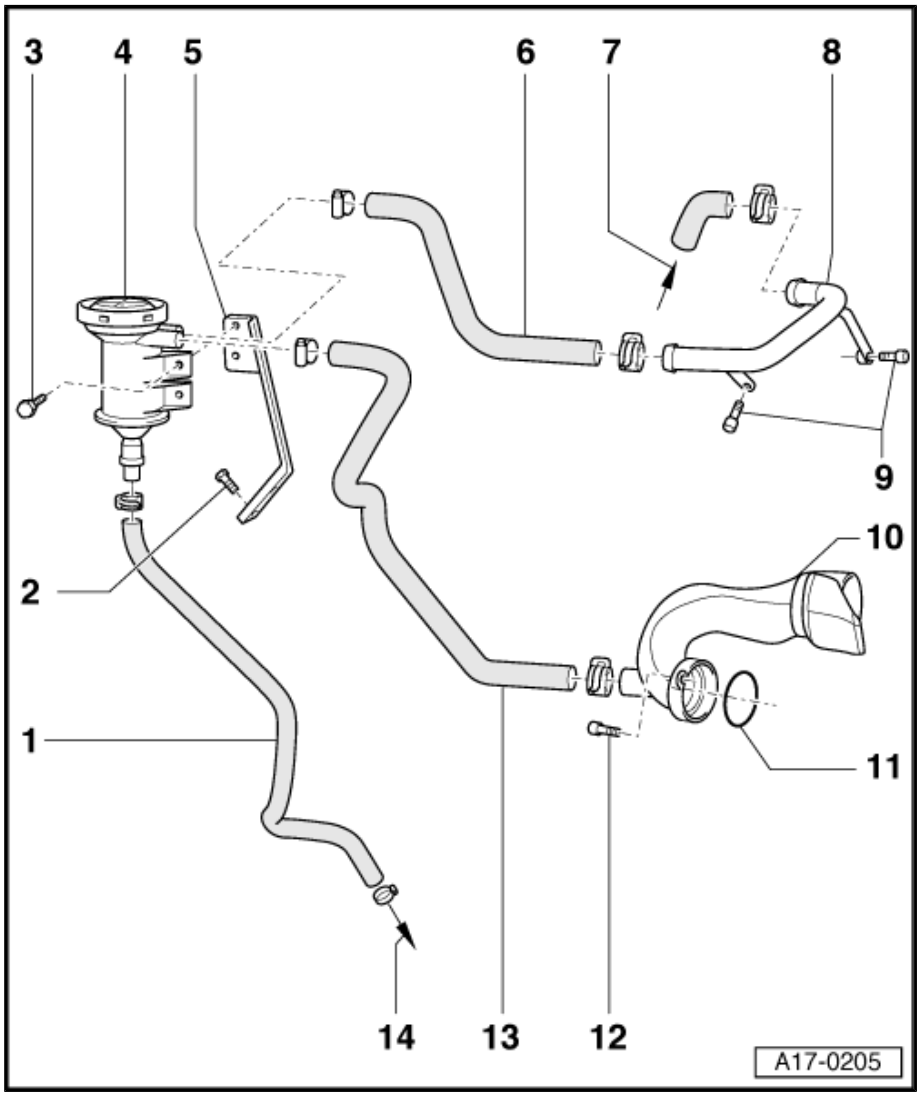

1.15 Checking pressure control valve for crankcase breather

Special tools and workshop equipment required

♦ Tester for K-Jetronic -V.A.G 1371-

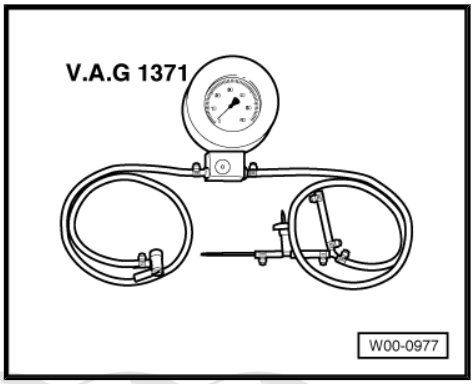

Test condition

- Coolant temperature at least 80 °C

Test sequence

– Pull out dipstick.

– Connect tester for K-Jetronic -V.A.G 1371- to guide tube for dipstick.

– Start engine and allow it to idle for at least 3 minutes.

– Read crankcase pressure off gauge.

- Specification: Less than 5 mbar

Protected by copyright. Copying for private or commercial purposes, in part or in whole, is not permitted unless authorised by AUDI AG. AUDI AG does not guarantee or accept any liability with respect to the correctness of information in this document. Copyright by AUDI AG.

If specification is exceeded:

– Replace pressure control valve for crankcase breather.

19 – Cooling

1 Removing and installing cooling system components

WARNING

Hot vapour/coolant may escape when opening the expansion tank. Cover the cap with a cloth and open carefully.

Note

- *The cooling system is pressurised when the engine is warm. Dissipate pressure if necessary before starting repair work.*
- *Replace gaskets and seals.*
- *Secure all hose connections with standard clamps ⇒ Parts catalogue .*
- *The arrows on the coolant pipes and the ends of the coolant hoses must coincide.*

Function

The cooling system is made up of a main cooling circuit, a charge air cooling circuit and a fuel cooling circuit. For function and mode of operation, refer to ⇒ Self-study programme No. 226 ; 3.3 l V8 TDI engine, mechanics .

Protected by copyright. Copying for private or commercial purposes, in part or in whole, is not permitted unless authorised by AUDI AG. AUDI AG does not guarantee or accept any liability with respect to the correctness of information in this document. Copyright by AUDI AG.

1.1 Exploded view of mechanical coolant pump and thermostat

1 - 10 Nm

2 - Sealing ring
- ❑ Replace

3 - Coolant temperature sender
- ❑ Tighten to 25 Nm

4 - Thermostat housing

5 - 22 Nm

6 - O-rings
- ❑ Replace

7 - Thermostat
- ❑ Removing and installing ⇒ page 174
- ❑ Checking ⇒ page 175
- ❑ Installation position ⇒ page 165

8 - Gasket
- ❑ Replace

9 - 10 Nm

10 - Mechanical coolant pump
- ❑ Removing and installing ⇒ page 173

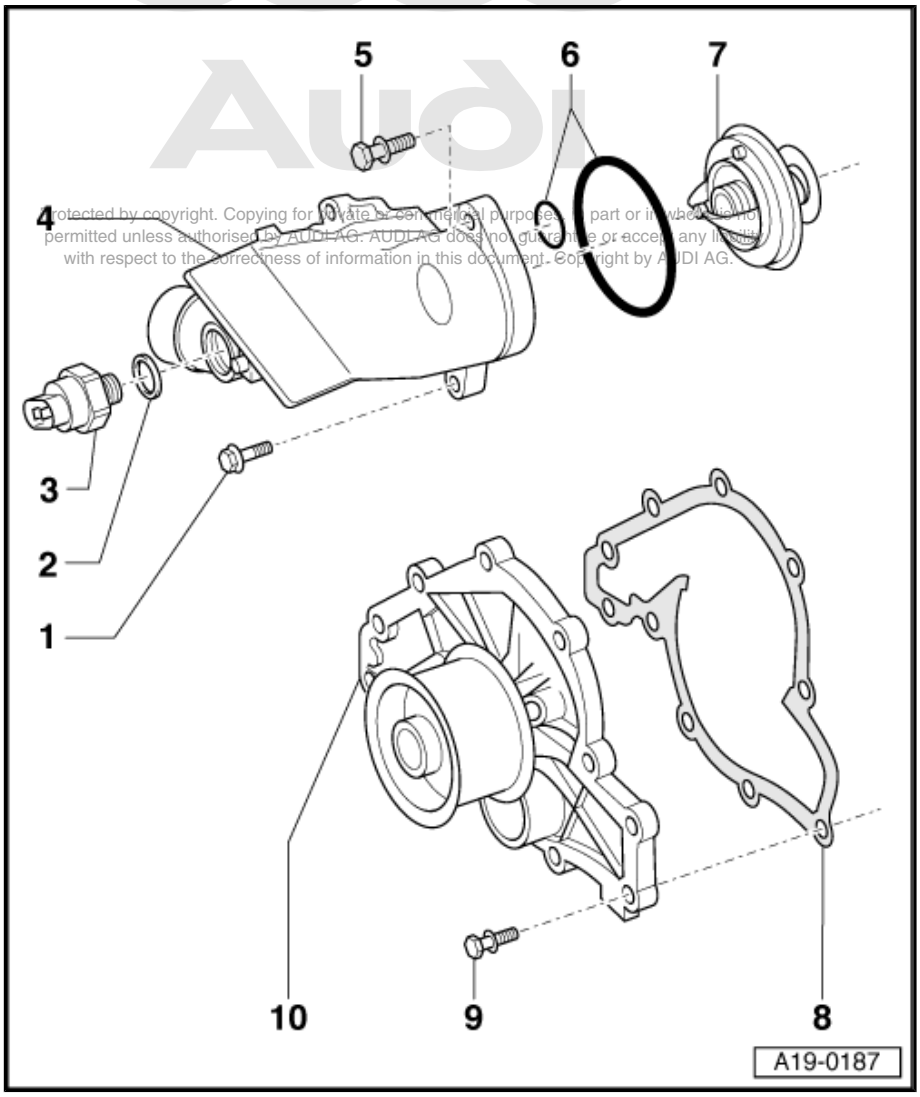

Protected by copyright. Copying for private or commercial purposes, in part or in whole, is not permitted unless authorised by AUDI AG. AUDI AG does not guarantee or accept any liability with respect to the correctness of information in this document. Copyright by AUDI AG.

Installation position of thermostat

- Vent valve -arrow- at top

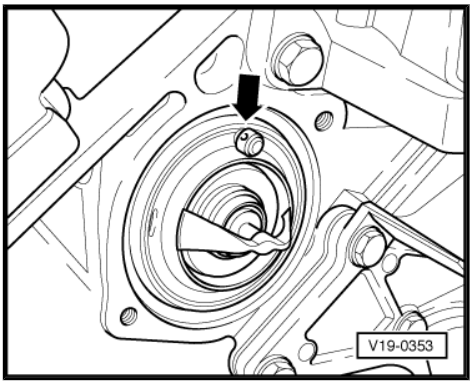

1.2 Draining and replenishing coolant

Special tools and workshop equipment required

- Hose clamps up to Ø 25 mm -3094-
- Cooling system tester -V.A.G 1274/1- from -V.A.G 1274-
- Pipe for cooling system tester -V.A.G 1274/10-
- Cooling system filler unit -VAS 6096-
- Drip tray for workshop cranes -VAS 6208- or -V.A.G 1306-
- Refractometer -T10007-

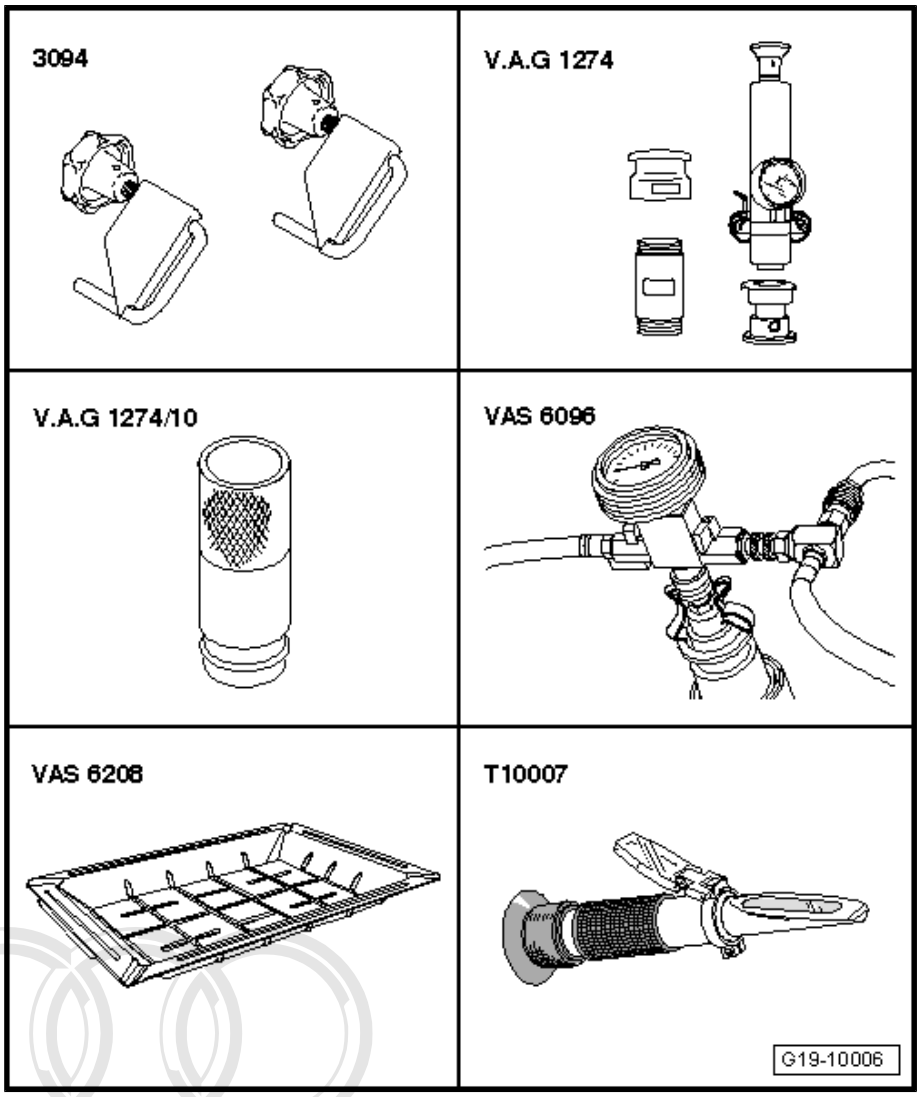

Draining

Note

Collect drained coolant in a clean container for disposal or re-use.

Protected by copyright. Copying for private or commercial purposes, in part or in whole, is not permitted unless authorised by AUDI AG. AUDI AG does not guarantee or accept any liability with respect to the correctness of information in this document. Copyright by AUDI AG.

WARNING

Hot vapour/coolant may escape when opening the expansion tank. Cover the cap with a cloth and open carefully.

– Open cap of coolant expansion tank.

– On vehicles with auxiliary heater, screw out bolts -arrows- for attaching exhaust pipe of auxiliary/supplementary heater to noise insulation.

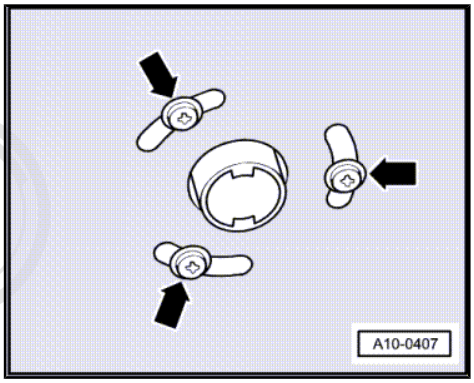

– Unfasten quick-release fasteners -1- and detach front noise insulation.

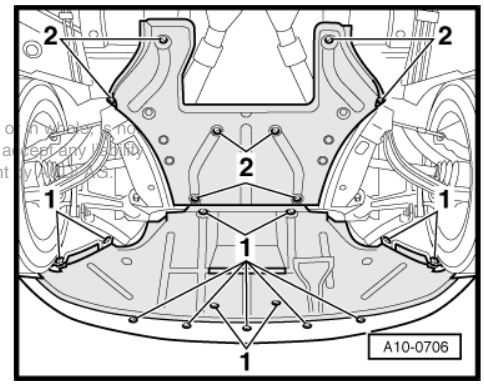

Protected by copyright. Copying for private or commercial purposes, in part or in whole, is not permitted unless authorised by AUDI AG. AUDI AG does not guarantee or accept any liability with respect to the correctness of information in this document. Copyright by AUDI AG.

– Place drip tray for workshop cranes -VAS 6208- or -V.A.G 1306- beneath engine.

– Screw out drain plugs -1 … 3- and drain off coolant.

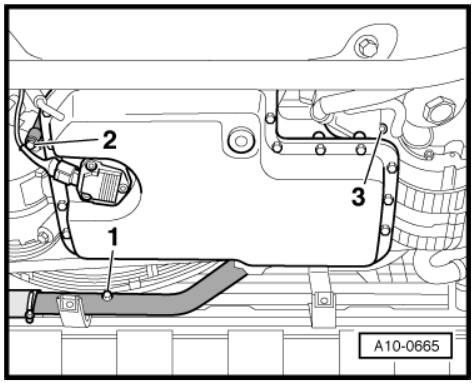

Replenishing

Note

- *The cooling system is filled all year round with a mixture of water and radiator anti-freeze/anti-corrosion agent.*
- *Use is only to be made of the coolant additive Plus - G 012 A8F A1- ("abbreviated to: G12+") "meeting specification TL VW 774 F". Other coolant additives could considerably impair anti-corrosion action in particular. The resultant damage could lead to loss of coolant and consequently to serious engine damage.*
- *The coolant additive "G12+" can be mixed with the additives "G11" and "G12".*
- *"G12+" and coolant additives marked "meeting specification TL VW 774 F" prevent frost and corrosion damage, stop scale forming and at the same time also increase the boiling point. The cooling system must therefore be filled all year round with anti-freeze and anti-corrosion additive.*
- *On account of the higher boiling point, the coolant helps to enhance engine reliability under heavy loads particularly in countries with tropical climates.*
- *Frost protection must be ensured down to approx. –25 °C (in countries with an Arctic climate down to approx. –35 °C).*
- *The coolant concentration must not be reduced by adding water even in warmer seasons and in warmer countries. The anti-freeze ratio must be at least 40 %.*
- *If greater frost protection is required in very cold climates, the amount of "G12+" can be increased, however only up to 60 % (giving frost protection to around -40 °C) as otherwise frost protection decreases again and cooling efficiency is also impaired.*
- *Exclusive use is to be made of clean drinking water for mixing coolant.*
- *If the radiator, heat exchanger, cylinder head, cylinder head gasket or cylinder block has been replaced, do not re-use the old coolant.*
- *Never re-use contaminated coolant.*
- *For checking anti-freeze protection in cooling system, use must be made for coolant additive "G12+" of the refractometer -T10007- .*

Protected by copyright. Copying for private or commercial purposes, in part or in whole, is not permitted unless authorised by AUDI AG. AUDI AG does not guarantee or accept any liability with respect to the correctness of information in this document. Copyright by AUDI AG.

– Replace sealing rings and tighten drain plugs -1 … 3-.

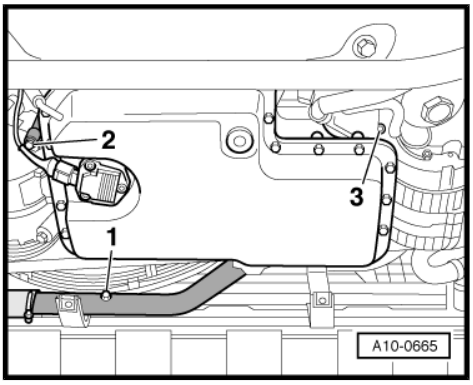

– Fill coolant tank -VAS 6096/1- with at least 14 litres of coolant pre-mixed to the correct ratio:

• “G12+” (40 %) and water (60 %) for frost protection down to –25 °C

• “G12+” (50 %) and water (50 %) for frost protection down to -35 °C

• “G12+” (60 %) and water (40 %) for frost protection down to -40 °C

– Screw adapter for cooling system tester -V.A.G 1274/1- to coolant expansion tank.

– Attach cooling system filler unit -VAS 6096- to adapter -V.A.G 1274/1- .

– Route exhaust air hose -1- into a small vessel -2- (the exhaust air entrains a small quantity of coolant, which is to be collected).

– Close the two valves -A- and -B- by setting lever at right angle to direction of flow.

– Connect hose -3- to compressed air supply.

• Pressure: 6 ... 10 bar

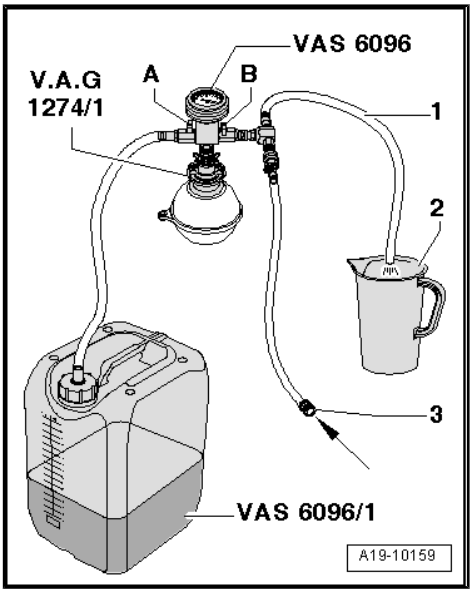

Protected by copyright. Copying for private or commercial purposes, in part or in whole, is not permitted unless authorised by AUDI AG. AUDI AG does not guarantee or accept any liability with respect to the correctness of information in this document. Copyright by AUDI AG.

– Open valve -B- by setting lever to direction of flow.

The vacuum booster generates a vacuum in the cooling system.

• The pointer of the indicating instrument must move into the green zone.

– Additionally open valve -A- briefly by setting lever to direction of flow so that hose of coolant tank -VAS 6096/1- is filled with coolant.

– Close valve -A- again.

– Leave valve -B- open for a further 2 minutes.

• The vacuum booster continues to generate vacuum in the cooling system.

• The pointer of the indicating instrument must remain in the green zone.

– Close valve -B-.

• The pointer of the indicating instrument must stop in the green zone. The vacuum in the cooling system is then sufficient for subsequent filling.

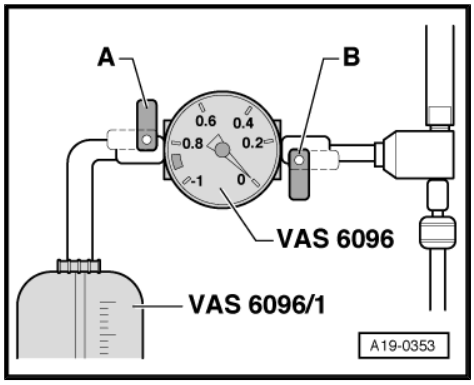

If the pointer is below the green zone:

– Repeat procedure.

If the vacuum decreases, there is a leak in the cooling system.

– Detach compressed air hose.

– Open valve -A-.

The vacuum in the cooling system causes coolant to be drawn in from the coolant tank -VAS 6096/1- ; the cooling system is filled.

– Detach cooling system filler unit -VAS 6096- from expansion tank.

– Attach pipe for cooling system tester -V.A.G 1274/10- to adapter -V.A.G 1274/1- .

Protected by copyright. Copying for private or commercial purposes, in part or in whole, is not permitted unless authorised by AUDI AG. AUDI AG does not guarantee or accept any liability with respect to the correctness of information in this document. Copyright by AUDI AG.

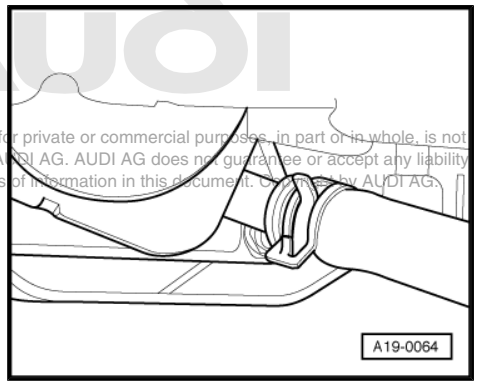

– Detach engine cover -arrows-.

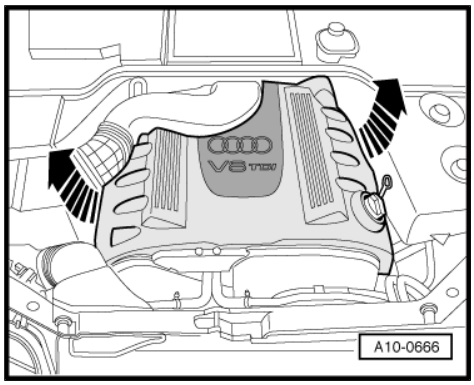

– Unclip cover -2- for air duct at lock carrier.
– Remove air duct -1-.

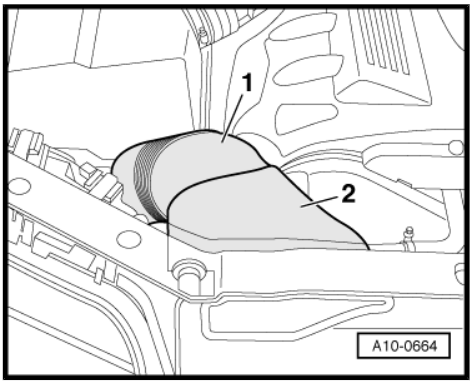

– Open bleed screw -arrow- at radiator.
– Pour in coolant until it emerges at bleeder hole.
– Close bleed screw.

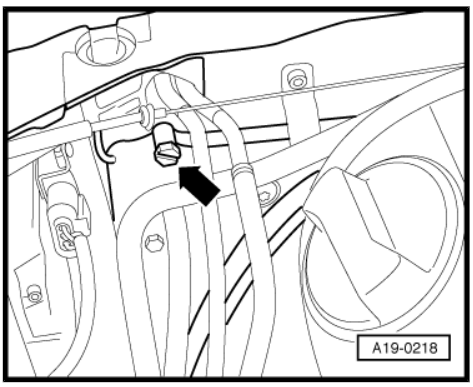

– Use hose clamp -3094- to pinch off coolant hose from fuel cooler to radiator upstream of T-piece.
– Open bleed screw -arrow- at fuel cooler.
– Pour in coolant until it emerges at bleeder hole.
– Detach hose clamp.

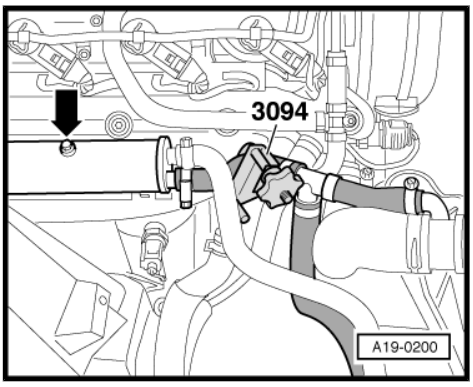

Protected by copyright. Copying for private or commercial purposes, in part or in whole, is not permitted unless authorised by AUDI AG. AUDI AG does not guarantee or accept any liability with respect to the correctness of information in this document. Copyright by AUDI AG.

– Open bleed screws -1- and -2- at intake manifold.
– Pour in coolant until it emerges at bleeder holes.
– Close bleed screws.

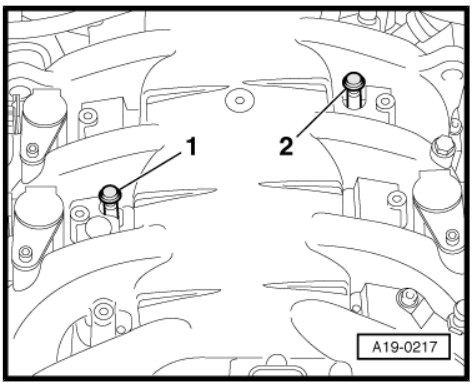

– Open bleed screws -arrows- at heating system supply and return.
– Pour in coolant until it emerges at bleeder holes.
– Close bleed screws.

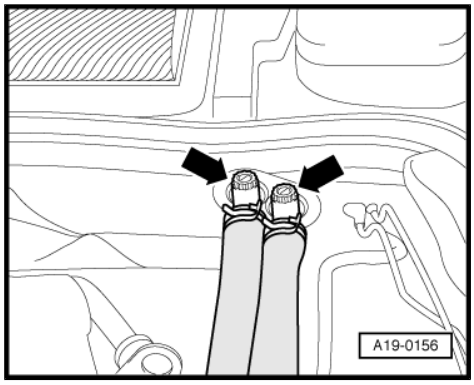

– Detach left plenum chamber cover -arrows-.

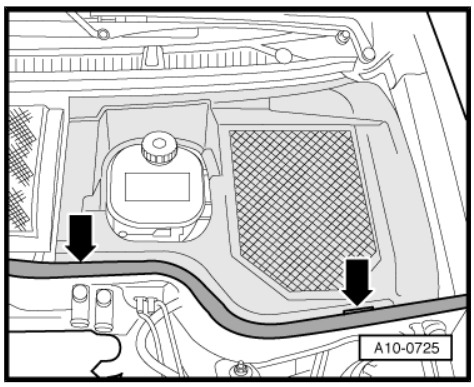

– Unplug 2-pin connector -arrow- to pump/valve unit.
– Set heater/air conditioner to “LO” on both sides.

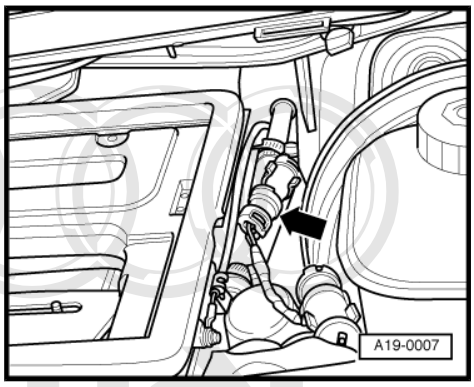

Note

- *The coolant circulation pump -V50- of the pump/valve unit is not to be started up until the coolant circuit has been bled.*
- *Dry-running would destroy the pump/valve unit.*

– Switch the auxiliary heating briefly on and then off again on appropriately equipped vehicles.
– Plug in 2-pin connector -arrow- to pump/valve unit.
– Screw on expansion tank cap.
– Set heater/air conditioner to “HI” on both sides.
– Start engine and maintain engine speed at approx. 2000 rpm for roughly 3 minutes.
– Switch off engine.

Protected by copyright. Copying for private or commercial purposes, in part or in whole, is not permitted unless authorised by AUDI AG. AUDI AG does not guarantee or accept any liability with respect to the correctness of information in this document. Copyright by AUDI AG.

WARNING

Hot vapour/coolant may escape when opening the expansion tank. Cover the cap with a cloth and open carefully.

– Check coolant level and replenish coolant if necessary. Coolant level must be on MAX mark with warm engine and between MIN and MAX marks if engine is cold.

– Check proper filling of cooling system:

• When set to “HI”, the heating system must supply the same temperature on the driver's and front passenger's side.

• The heater/air conditioner pump/valve unit must not make any noise.

– Repeat bleeding procedure if necessary ⇒ page 170 .

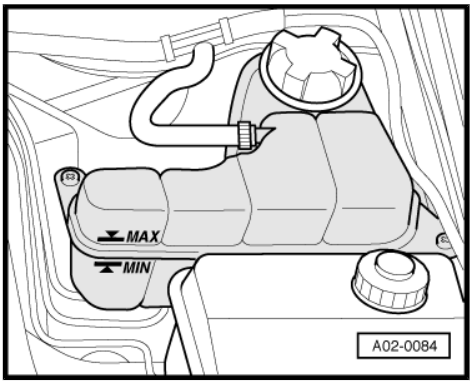

Tightening torque

Component	Nm
Right coolant drain plug (banjo bolt)	10
Coolant drain plug to coolant drain pipe	18
Coolant drain plug to coolant pipe	10

1.3 Removing and installing mechanical coolant pump

Removing

– Drain off coolant ⇒ page 166 .

– Remove toothed belt ⇒ page 51 .

– Unscrew idler wheel -1-.

– Screw out bolts -arrows- and detach rear left toothed belt guard.

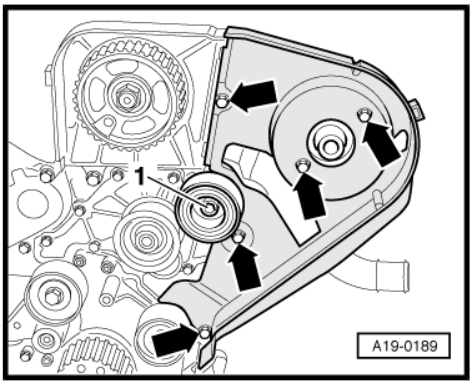

– Screw out bolts -arrows- and detach coolant pump.

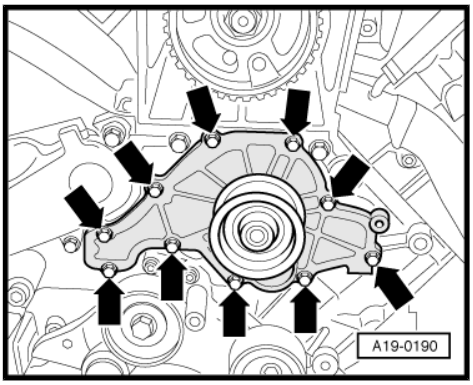

Installing

Install in reverse order; paying attention to the following:

Note

Replace gaskets and seals.

– Fit toothed belt (adjust timing) ⇒ page 54 .

– Replenish coolant ⇒ page 168 .

Tightening torques

Component	Nm
Coolant pump to cylinder block	10
Rear toothed belt guard to engine	10
Idler wheel to engine	70

Protected by copyright. Copying for private or commercial purposes, in part or in whole, is not permitted unless authorised by AUDI AG. AUDI AG does not guarantee or accept any liability with respect to the correctness of information in this document. Copyright by AUDI AG.

1.4 Removing, installing and checking thermostat

Removing

– Drain off coolant ⇒ page 166 .

– Detach toothed belt from camshaft sprockets ⇒ page 58 .

– Screw out bolts -arrows- and detach rear right toothed belt guard.

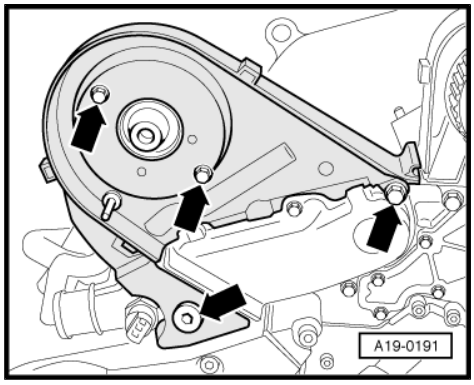

– Unplug connector at coolant temperature sender.

– Detach coolant hoses from thermostat housing.

– Detach thermostat housing -arrows-.

– Detach O-rings and thermostat.

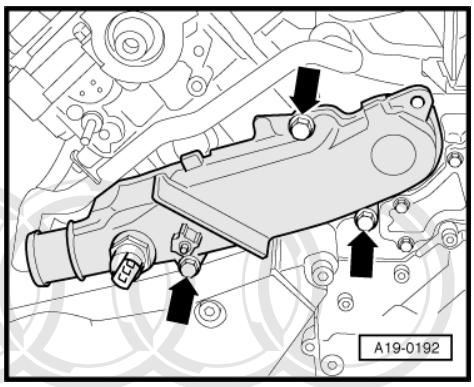

Protected by copyright. Copying for private or commercial purposes, in part or in whole, is not permitted unless authorised by AUDI AG. AUDI AG does not guarantee or accept any liability with respect to the correctness of information in this document. Copyright by AUDI AG.

Installing

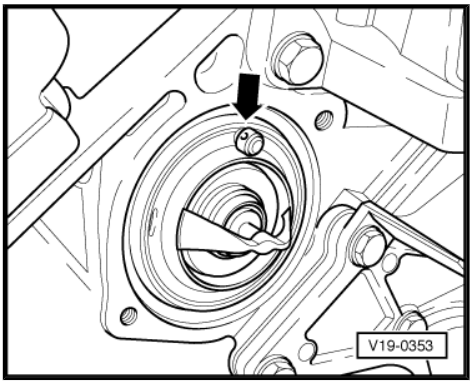

Note

Replace gaskets and seals.

– Install thermostat.
• Installation position: Vent valve -arrow- facing upwards
– Install thermostat housing.
– Fit toothed belt (adjust timing) ⇒ page 60 .
– Replenish coolant ⇒ page 168 .

Tightening torques

Component		Nm
Thermostat housing to cylinder block		10
Rear toothed belt guard to engine	M6	10
	M8	22
Clamps for coolant hoses		2

Checking thermostat

– Heat thermostat in water bath.

Start of opening	End of opening	Opening stroke
approx. 87 °C	approx. 102 °C [13]	min. 8 mm [14]

Protected by copyright. Copying for private or commercial purposes, in part or in whole, is not permitted unless authorised by AUDI AG. AUDI AG does not guarantee or accept any liability with respect to the correctness of information in this document. Copyright by AUDI AG.

13) Cannot be checked

14) At 95 °C

1.5 Exploded view of coolant pipes

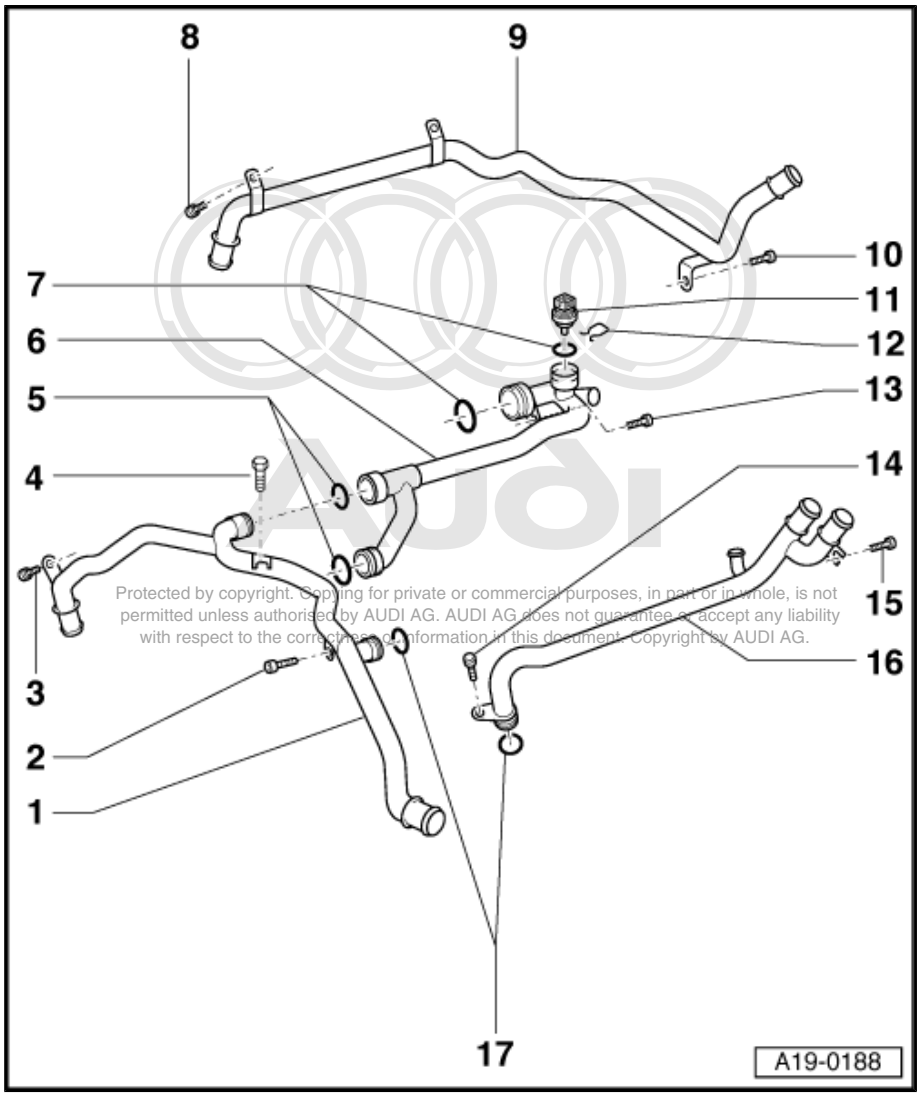

Protected by copyright. Copying for private or commercial purposes, in part or in whole, is not permitted unless authorised by AUDI AG. AUDI AG does not guarantee or accept any liability with respect to the correctness of information in this document. Copyright by AUDI AG.

1 - Front coolant pipe
- ❑ Removing and installing ⇒ page 177

2 - 10 Nm

3 - 10 Nm

4 - 22 Nm

5 - O-rings
- ❑ Replace

6 - Right coolant pipe
- ❑ Removing and installing ⇒ page 179

7 - O-rings
- ❑ Replace

8 - 10 Nm

9 - Rear coolant pipe
- ❑ Removing and installing ⇒ page 180

10 - 10 Nm

11 - Coolant temperature gauge sender -G2- / coolant temperature sender -G62-

12 - Retaining clip

13 - 10 Nm

14 - 10 Nm

15 - 10 Nm

16 - Left coolant pipe
- ❑ Removing and installing ⇒ page 178

17 - O-rings
- ❑ Replace

1.6 Removing and installing front coolant pipe

Removing

- Engine in position
- Drain off coolant ⇒ page 166 .
- Remove intake manifold ⇒ Rep. Gr. 23 .
- Remove toothed belt ⇒ page 51 .
- Screw out bolts -arrows- and detach rear left toothed belt guard.

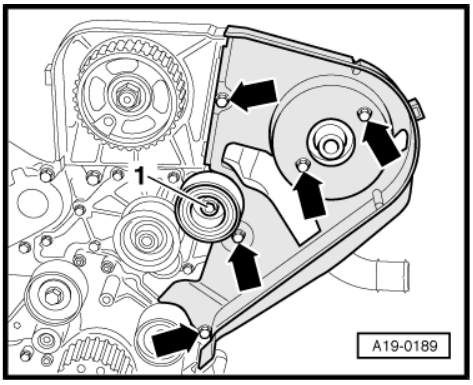

Note

-Item 1- can be ignored.

- Screw out bolts -arrows- and detach rear right toothed belt guard.

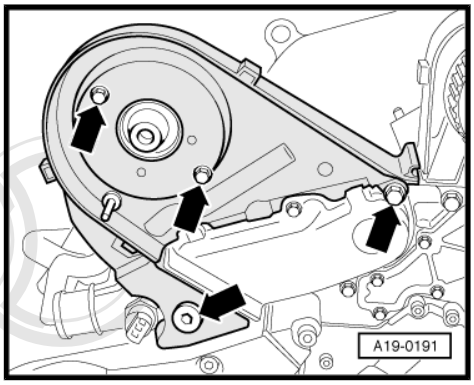

- Screw out bolts -2 … 4-.
- Detach high-pressure pump.

Note

Leave connector -1-, fuel hoses and distributor housing connected.

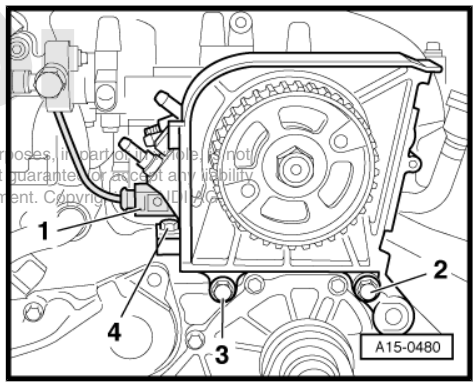

- Unplug connector at coolant temperature sender -3-.
- Screw out bolt -2-.
- Press coolant pipe -1- to rear and detach.

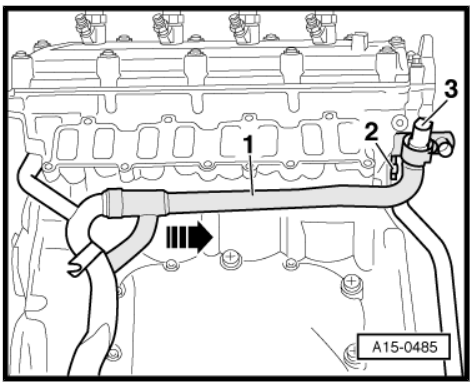

Protected by copyright. Copying for private or commercial purposes, in part or in whole, is not permitted unless authorised by AUDI AG. AUDI AG does not guarantee or accept any liability with respect to the correctness of information in this document. Copyright by AUDI AG.

– Unscrew front coolant pipe -arrows-.
– Detach front coolant pipe.

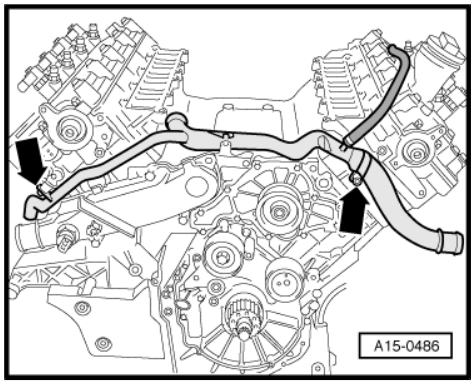

Installing

Install in reverse order; paying attention to the following:

Note

Replace O-rings.

– Before installing, clean/smooth sealing surface for O-ring.
– Moisten new O-ring with “G12+” and slip onto coolant pipe.
– Install intake manifold ⇒ Rep. Gr. 23 .
– Fit toothed belt (adjust timing) ⇒ page 54 .
– Replenish coolant ⇒ page 168 .

Tightening torques

Component		Nm
Coolant pipe to	Cylinder head	10
	Cylinder block	10
High-pressure pump to cylinder block		22
Rear toothed belt guard to engine	M6	10
	M8	22
Clamps for coolant hoses		2

1.7 Removing and installing left coolant pipe

Removing

- Engine in position
– Drain off coolant ⇒ page 166 .
– Remove intake manifold ⇒ Rep. Gr. 23 .
– Mark position of coolant hoses.
– Remove coolant hoses -arrows- between engine and heating system heat exchanger.

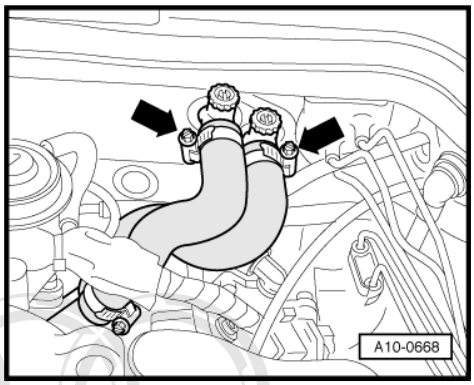

Protected by copyright. Copying for private or commercial purposes, in part or in whole, is not permitted unless authorised by AUDI AG. AUDI AG does not guarantee or accept any liability with respect to the correctness of information in this document. Copyright by AUDI AG.

– Unscrew and lift off left coolant pipe -arrows-.

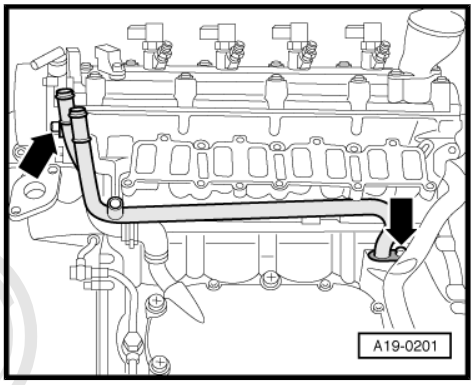

Installing

Install in reverse order; paying attention to the following:

Note

- *Replace O-rings.*
- *Secure all hose connections with standard clamps ⇒ Parts catalogue .*

– Before installing, clean/smooth sealing surface for O-ring.

– Moisten new O-ring with “G12+” and slip onto coolant pipe.

– Install intake manifold ⇒ Rep. Gr. 23 .

– Replenish coolant ⇒ page 168 .

Tightening torques

Component	Nm
Coolant pipe to Cylinder head	10
Cylinder block	10
Clamps for coolant hoses	2

Protected by copyright. Copying for private or commercial purposes, in part or in whole, is not permitted unless authorized by AUDI AG. AUDI AG does not guarantee or accept any liability with respect to the correctness of information in this document. Copyright by AUDI AG.

1.8 Removing and installing right coolant pipe

Removing

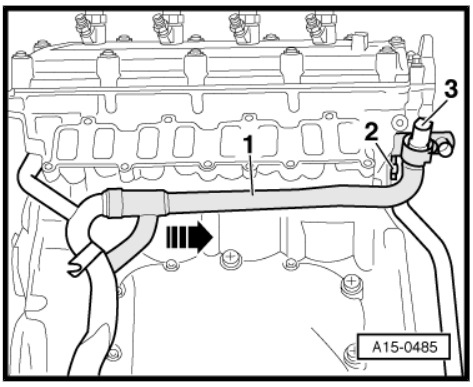

- Engine in position

– Drain off coolant ⇒ page 166 .

– Remove intake manifold ⇒ Rep. Gr. 23 .

– Unplug connector at coolant temperature sender -3-.

– Screw out bolt -2-.

– Press right coolant pipe -1- to rear and detach.

Installing

Install in reverse order; paying attention to the following:

Note

Replace O-rings.

– Before installing, clean/smooth sealing surface for O-ring.

– Moisten new O-ring with “G12+” and slip onto coolant pipe.

– Install intake manifold ⇒ Rep. Gr. 23 .

– Replenish coolant ⇒ page 168 .

Tightening torques

Component	Nm
Coolant pipe to cylinder head	10
Clamps for coolant hoses	2

1.9 Removing and installing rear coolant pipe

Removing

- Engine in position
- Drain off coolant ⇒ page 166 .
- Remove intake manifold ⇒ Rep. Gr. 23 .
- Remove cover on right in engine compartment -arrows-.

Protected by copyright. Copying for private or commercial purposes, in part or in whole, is not permitted unless authorised by AUDI AG. AUDI AG does not guarantee or accept any liability with respect to the correctness of information in this document. Copyright by AUDI AG.

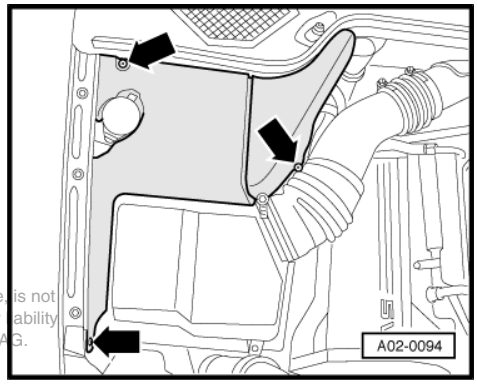

- Unfasten hose clamp -1-.
- Remove air cleaner housing -arrows-.

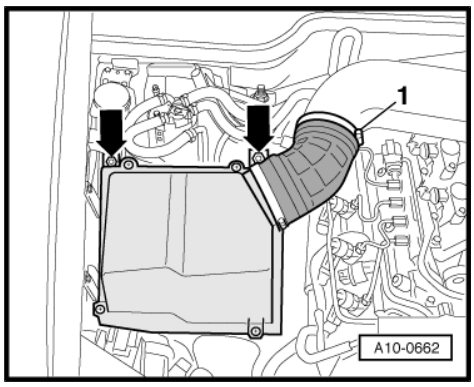

- Detach front and rear coolant hoses at coolant pipe.
- Remove right air pipe -arrows-.

Note

Illustration shows engine removed.

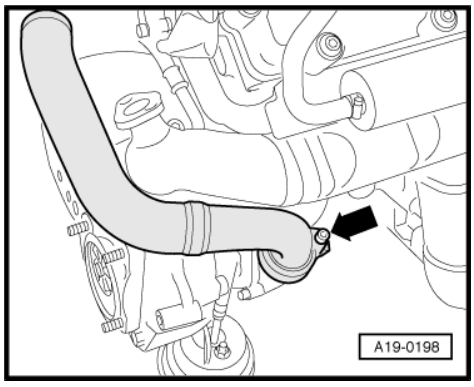

- Remove right connecting pipe for exhaust gas recirculation -arrows-.

Note

Illustration shows engine removed.

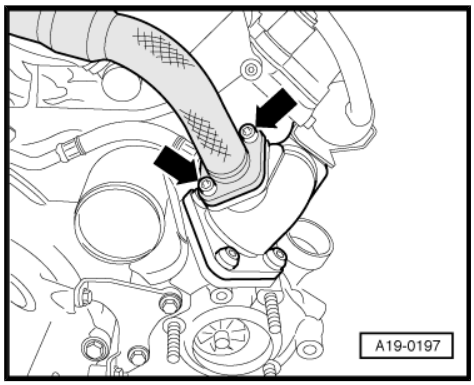

– Detach fuel pipes -1- and -2- at fuel pre-supply pump. To do so, press catch and lift off pipes -arrows-.

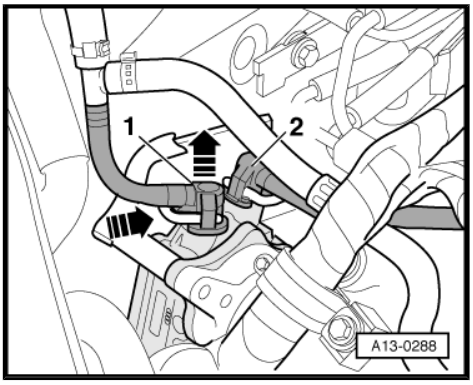

– Screw out bolts -arrows-.
– Detach fuel pre-supply pump.

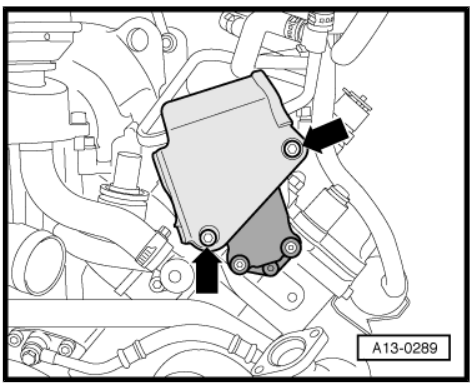

Protected by copyright. Copying for private or commercial purposes, in part or in whole, is not permitted unless authorised by AUDI AG. AUDI AG does not guarantee or accept any liability with respect to the correctness of information in this document. Copyright by AUDI AG.

– Unplug connector at coolant temperature sender -3-.
– Screw out bolt -2-.
– Press right coolant pipe -1- to rear and detach.

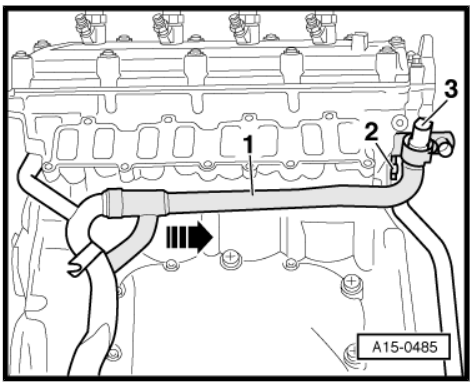

– Screw out bolts -arrows- at fuel cooler.
– Unscrew rear coolant pipe from cylinder block.
– Detach rear coolant pipe.

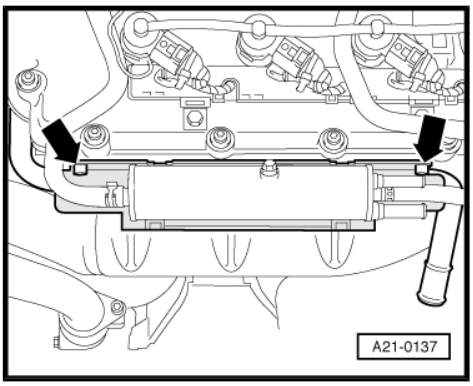

Installing

Install in reverse order; paying attention to the following:

Note

- *Replace gaskets and O-rings.*
- *Secure all hose connections with standard clamps ⇒ Parts catalogue .*

– Before installing, clean/smooth sealing surface for O-ring.
– Moisten new O-ring with “G12+” and slip onto coolant pipe.

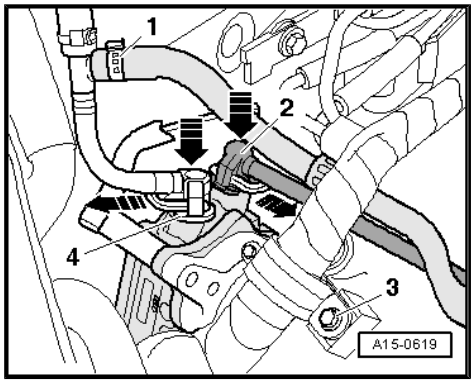

Note

- *Pull catches outwards and press fuel pipes -2- and -4- onto fuel pre-supply pump connections until they engage -arrows-.*
- *If the pipe has been fitted properly, the catch will be loosely positioned in the hose coupling.*
- *-Item 1- and -Item 3- can be ignored.*

– Install intake manifold ⇒ Rep. Gr. 23 .

– Replenish coolant ⇒ page 168 .

Tightening torques

Component		Nm
Coolant pipe to	Cylinder head	10
	Cylinder block	10
Connecting pipe for exhaust gas recirculation to exhaust manifold		10
Air pipe to turbocharger		10
Fuel pre-supply pump to cylinder head		10
Clamps for coolant hoses		2

1.10 Removing and installing radiator

Special tools and workshop equipment required

- Hose clamps up to Ø 25 mm -3094-

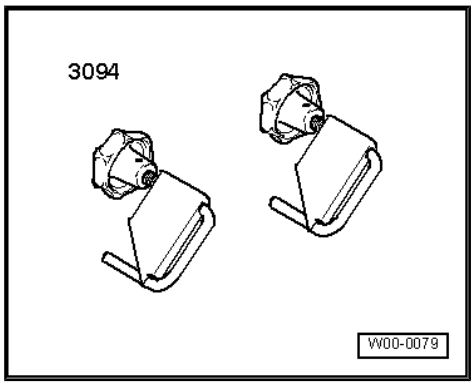

- Drip tray for workshop cranes -VAS 6208- or -V.A.G 1306-

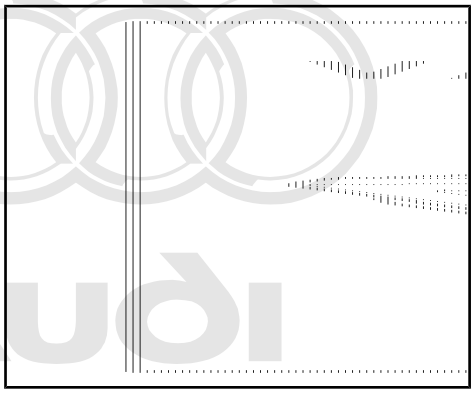

Protected by copyright. Copying for private or commercial purposes, in part or in whole, is not permitted unless authorised by AUDI AG. AUDI AG does not guarantee or accept any liability with respect to the correctness of information in this document. Copyright by AUDI AG.

Removing

Note

- *Collect drained coolant in a clean container for disposal or re-use.*
- *Coolant must be completely drained off if radiator is replaced.*

WARNING

Hot vapour/coolant may escape when opening the expansion tank. Cover the cap with a cloth and open carefully.

– Open cap of coolant expansion tank.

– On vehicles with auxiliary heater, screw out bolts -arrows- for attaching exhaust pipe of auxiliary/supplementary heater to noise insulation.

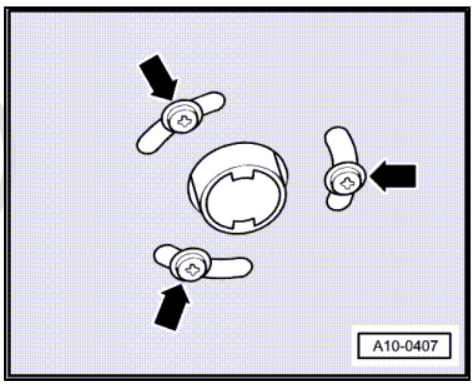

– Unfasten quick-release fasteners -1- and detach front noise insulation.

– Remove front bumper ⇒ General body repairs, exterior; Rep. Gr. 63 .

Protected by copyright. Copying for private or commercial purposes, in part or in whole, is not permitted unless authorised by AUDI AG. AUDI AG does not guarantee or accept any liability with respect to the correctness of information in this document. Copyright by AUDI AG.

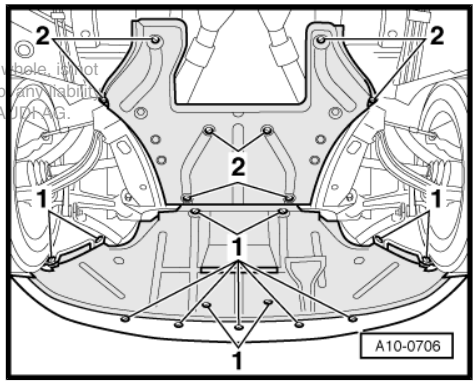

– Place drip tray for workshop cranes -VAS 6208- or -V.A.G 1306- beneath engine.

– Screw out drain plug -1- and drain off coolant at coolant pipe only.

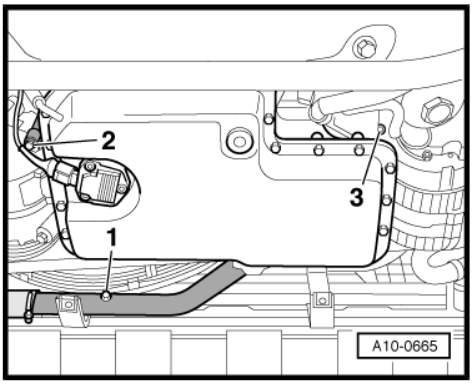

– Pull out clip -arrow- and detach coolant hose from radiator.

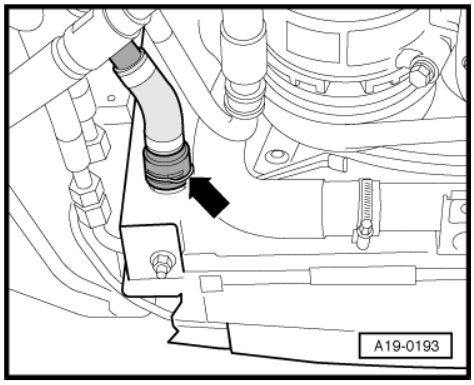

– Unscrew ATF pipe at bottom from radiator -arrow-.

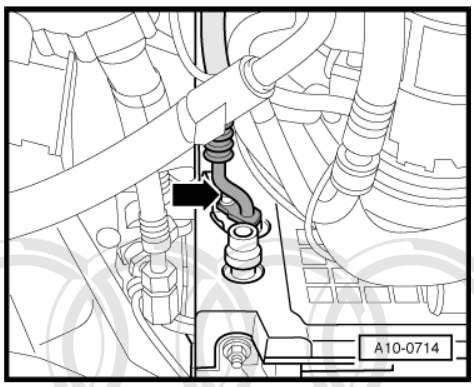

Note

Heed rules for cleanliness when working on automatic gearbox ⇒ Rep. Gr. 37 .

– Detach both coolant hoses -1- and -2- at bottom right of radiator.

– Unfasten nut -3- on left and right of radiator by several turns.

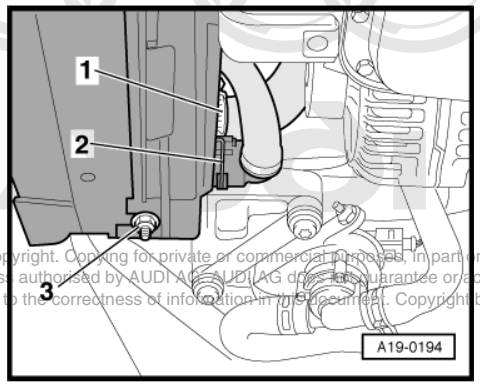

Protected by copyright. Copying for private or commercial purposes, in part or in whole, is not permitted unless authorised by AUDI AG. AUDI AG does not guarantee or accept any liability with respect to the correctness of information in this document. Copyright by AUDI AG.

– Remove air ducts on left and right at radiator.

– Screw out bolts -1- and -2-.

– Detach cooler for power steering hydraulic fluid and lay aside with pipes connected.

– Detach air duct at bottom -3-.

– Pull condenser upwards out of holders, swivel aside to left and tie in place on body.

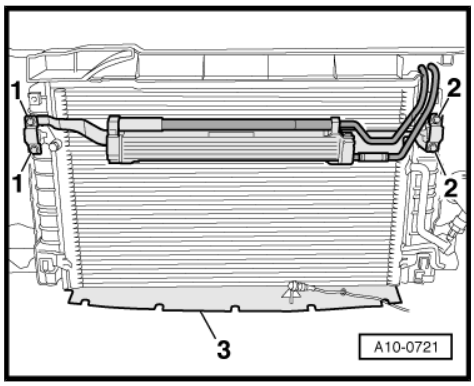

– Unclip cover -2- for air duct at lock carrier.
– Remove air duct -1-.

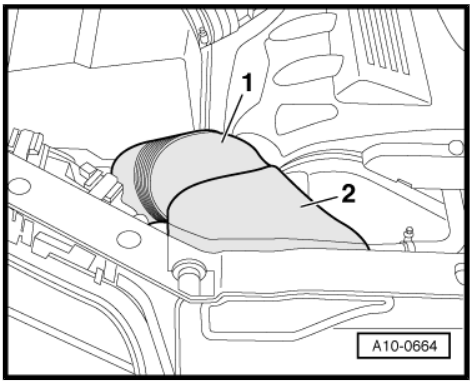

– Unscrew ATF pipe at top from radiator -arrow-.

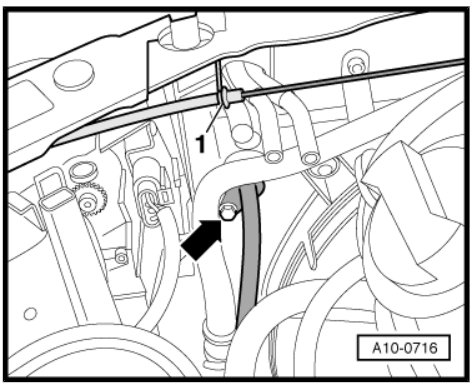

Note

- *Heed rules for cleanliness when working on automatic gearbox ⇒ Automatic gearbox 01L, four-wheel drive; Rep. Gr. 37 .*
- *Lift ATF pipes clear and tie in place on engine to stop fluid escaping.*

– Detach right coolant hose -2-.
– Unscrew radiator securing nuts -1- on left and right.
– Swivel top edge of radiator forwards and lift off radiator.

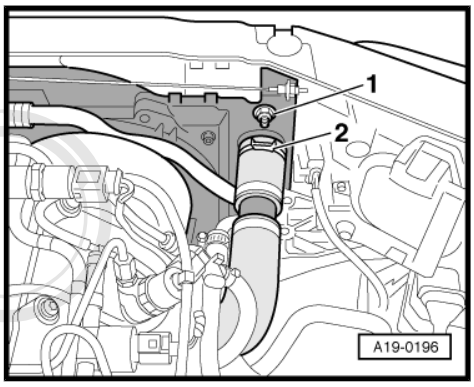

Installing

Install in reverse order; paying attention to the following:

Note

- *Replace gaskets and seals.*
- *Secure all hose connections with standard clamps ⇒ Parts catalogue .*

– Attach ATF pipes to ATF cooler ⇒ Automatic gearbox 01L, four-wheel drive; Rep. Gr. 37 .
– Check ATF level ⇒ Automatic gearbox 01L, four-wheel drive; Rep. Gr. 37 .
– Install front bumper ⇒ General body repairs, exterior; Rep. Gr. 63 .
– Replenish coolant ⇒ page 168 .

Protected by copyright. Copying for private or commercial purposes, in part or in whole, is not permitted unless authorised by AUDI AG. AUDI AG does not guarantee or accept any liability with respect to the correctness of information in this document. Copyright by AUDI AG.

Tightening torques

Component		Nm
Radiator to lock carrier	M6	10
	M8	20
Condenser to radiator		10
Clamps for coolant hoses		2

1.11 Checking cooling system for leaks

Special tools and workshop equipment required

- ♦ Cooling system tester -V.A.G 1274- with -V.A.G 1274/1-

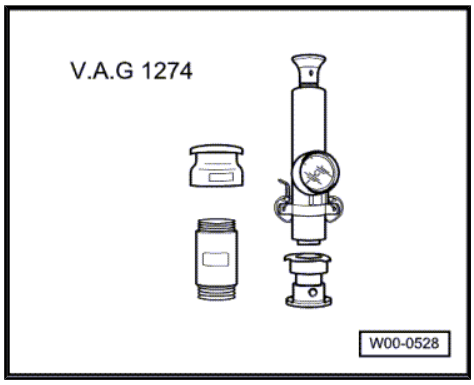

Test condition

- Engine warm

Test sequence

> ⚠ WARNING
>
> *Hot vapour/coolant may escape when opening the expansion tank. Cover the cap with a cloth and open carefully.*

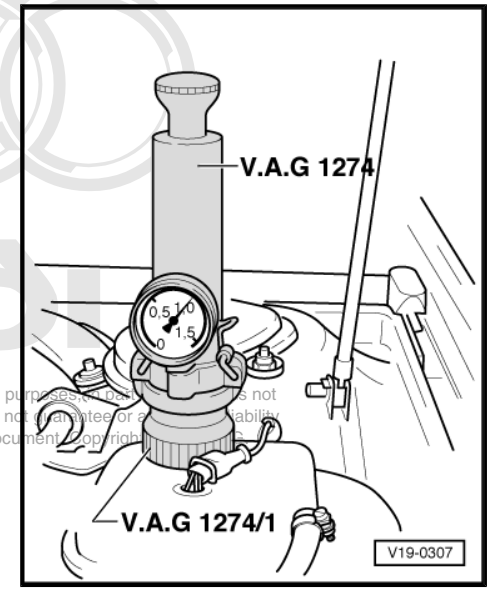

– Open cap of coolant expansion tank.

– Position cooling system tester -V.A.G 1274- with adapter -V.A.G 1274/1- on expansion tank.

– Use hand pump of cooling system tester to generate a pressure of approx. 1.0 bar.

Protected by copyright. Copying for private or commercial purposes, in part or in whole, is not permitted unless authorised by AUDI AG. AUDI AG does not guarantee or assume any liability with respect to the correctness of information in this document. Copyright by AUDI AG.

If pressure decreases:

– Localise leak and eliminate fault.

Checking pressure relief valve in cap

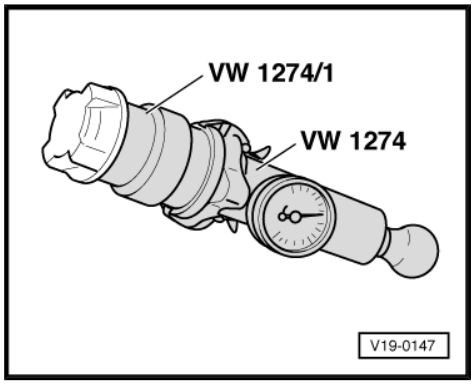

– Position cooling system tester -V.A.G 1274- with adapter -V.A.G 1274/1- on cap.

– Use hand pump of cooling system tester to generate pressure.

- Pressure relief valve must open at 1.2 … 1.5 bar.

If pressure relief valve does not open as indicated:

– Replace cap.

1.12 Exploded view of hydraulic fan

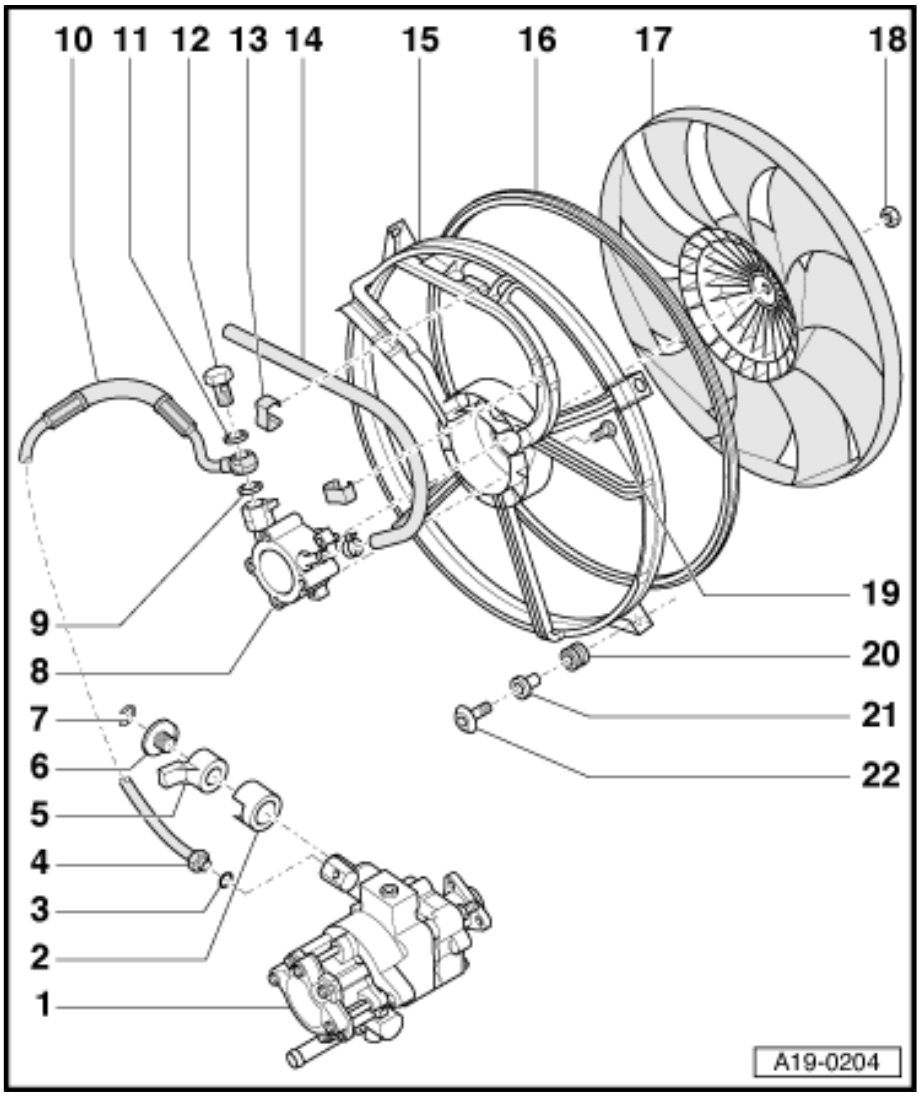

1 - Hydraulic pump
- ❑ For power steering and hydraulic fan
- ❑ Removing and installing ⇒ page 193

2 - Sleeve

3 - Sealing ring
- ❑ Replace

4 - 50 Nm

5 - Radiator fan valve -N313-
- ❑ Checking ⇒ page 190

6 - Washer

7 - Circlip

8 - Motor for hydraulic fan
- ❑ Replace if leaking
- ❑ Unscrew to unscrew fan ring -Item 15- and fan impeller -Item 17-

9 - Sealing ring
- ❑ Replace

10 - Supply pipe

11 - Sealing ring
- ❑ Replace

12 - 50 Nm
- ❑ Provide support at hexagon of motor housing when tightening

13 - Retaining clip
- ❑ For return hose

14 - Return hose

15 - Fan ring

16 - Spacer

17 - Fan impeller

18 - Special nut with left-hand thread - 21 Nm

19 - 10 Nm

20 - Rubber grommet

21 - Sleeve

22 - 10 Nm

Protected by copyright. Copying for private or commercial purposes, in part or in whole, is not permitted unless authorised by AUDI AG. AUDI AG does not guarantee or accept any liability with respect to the correctness of information in this document. Copyright by AUDI AG.

1.13 Removing and installing hydraulic fan

Special tools and workshop equipment required

♦ Hose clamps up to Ø 25 mm -3094-

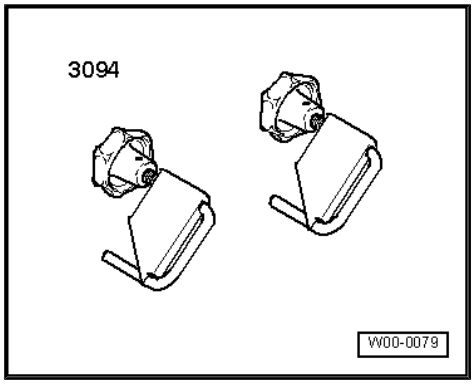

♦ Drip tray for workshop cranes -VAS 6208- or -V.A.G 1306-

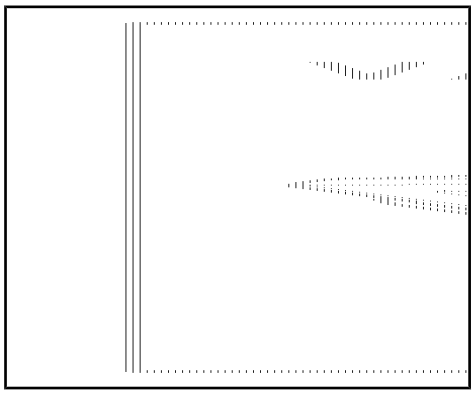

Removing

Note

Re-attach all cable ties unfastened or severed on removal at the same location on installation.

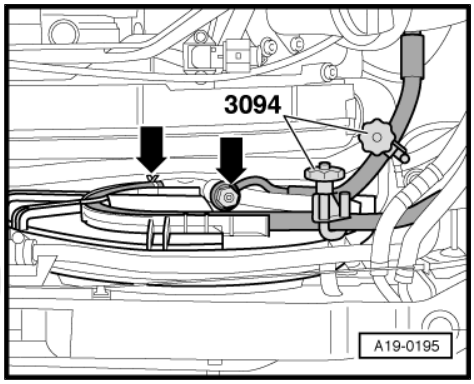

– Pull lock carrier forwards ⇒ page 31 .
– Place drip tray for workshop cranes -VAS 6208- or -V.A.G 1306- beneath engine.
– Use hose clamps -3094- to pinch off hydraulic pipes to hydraulic fan.
– Detach hydraulic pipes at hydraulic fan -arrows-.

Protected by copyright. Copying for private or commercial purposes, in part or in whole, is not permitted unless authorised by AUDI AG. AUDI AG does not guarantee or accept any liability with respect to the correctness of information in this document. Copyright by AUDI AG.

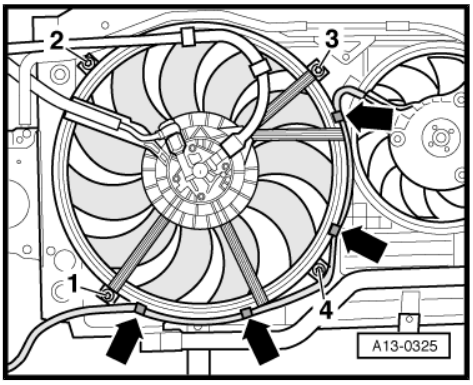

– Unclip wiring harness from fan ring -arrows-.
– Screw out bolts -1 … 4-.
– Take out hydraulic fan.

Installing

Install in reverse order; paying attention to the following:

Note

♦ *Replace sealing rings.*
♦ *Re-attach all cable ties in the same locations on installation.*

– Install lock carrier with attachments ⇒ General body repairs, exterior; Rep. Gr. 50 .
– Install headlights ⇒ Electrical system; Rep. Gr. 94 .
– Install front bumper ⇒ General body repairs, exterior; Rep. Gr. 63 .
– Check headlight adjustment ⇒ Electrical system; Rep. Gr. 94 .
– Replenish power steering fluid and bleed steering system ⇒ Running gear, front-wheel drive and four-wheel drive; Rep. Gr. 48 .

Tightening torques

Component	Nm
Hydraulic fan to lock carrier	10
Hydraulic pipe to hydraulic fan	50

Protected by copyright. Copying for private or commercial purposes, in part or in whole, is not permitted unless authorised by AUDI AG. AUDI AG does not guarantee or accept any liability with respect to the correctness of information in this document. Copyright by AUDI AG.

1.14 Checking radiator fan valve -N313-

Special tools and workshop equipment required

- Portable multimeter -V.A.G 1526 B- or -V.A.G 1526 A-
- Adapter set -V.A.G 1594 C- or -V.A.G 1594 A-
- Test box -V.A.G 1598/30-

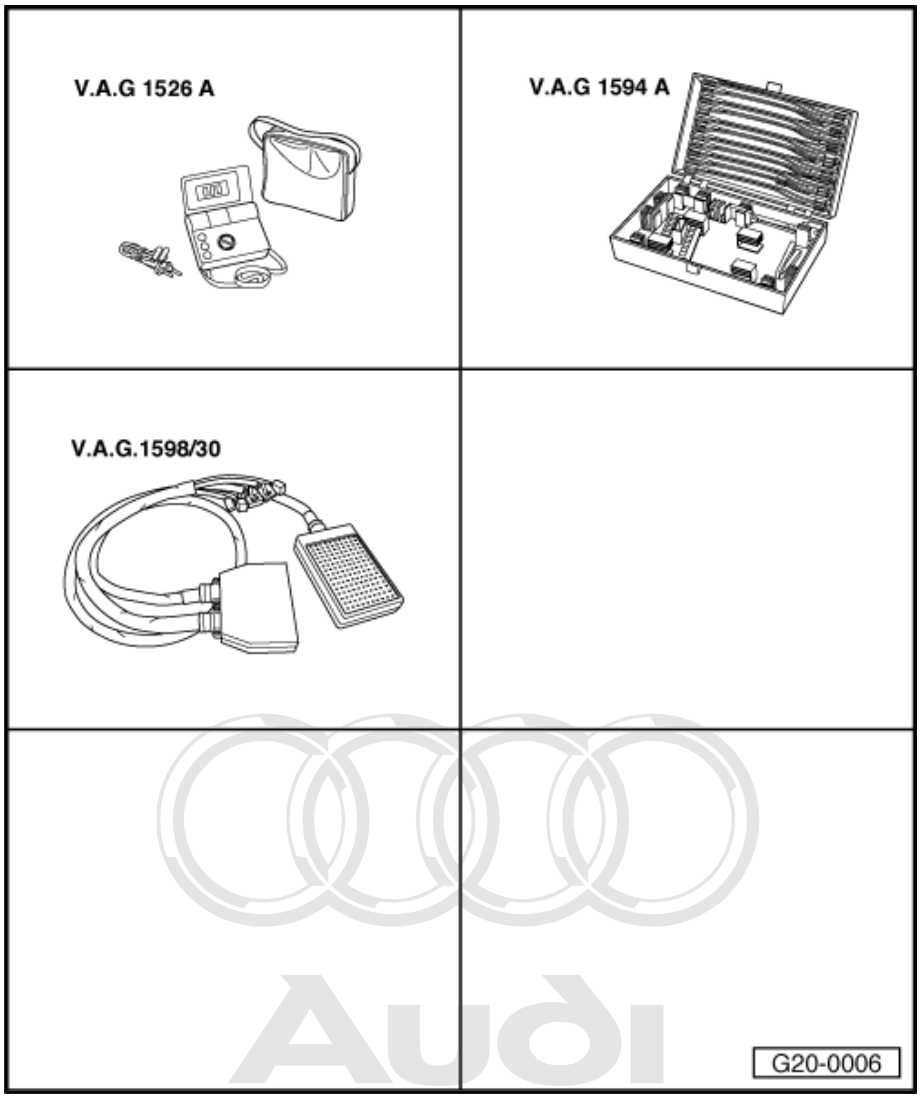

Protected by copyright. Copying for private or commercial purposes, in part or in whole, is not permitted unless authorised by AUDI AG. AUDI AG does not guarantee or accept any liability with respect to the correctness of information in this document. Copyright by AUDI AG.

Test conditions

- Valve fuse OK (in relay and fuse carrier in electronics box in plenum chamber)
- Fault memory interrogated

Checking internal resistance

– Unplug connector -arrow-.

– Connect multimeter (resistance measuring range) to valve.

- Specification: 9 … 12 Ω

If reading does not match specification:

– Replace valve.

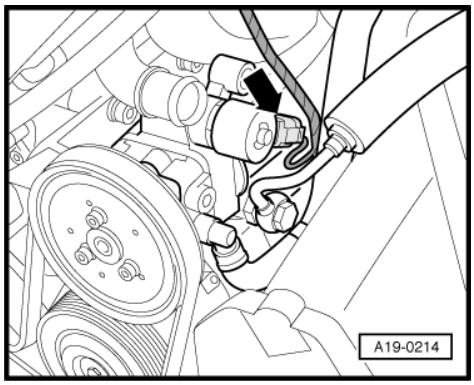

Checking power supply

– Connect up multimeter (voltage measuring range) between contact -1- and earth.

– Switch on ignition.

• Specification: approx. battery voltage

If reading does not match specification:

– Use current flow diagram to repair wiring.

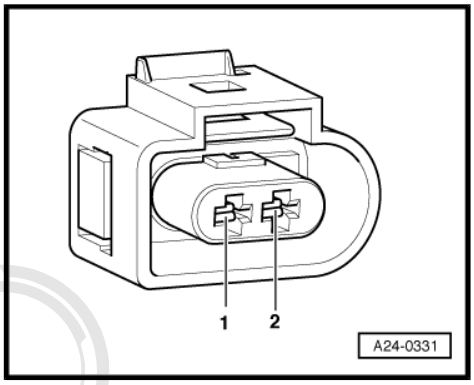

Checking actuation

– Slacken off cross-head bolts -1- at electronics box in plenum chamber.

– Unclip plenum chamber cover -2- at front at bulkhead -arrows-.

– Detach plenum chamber cover.

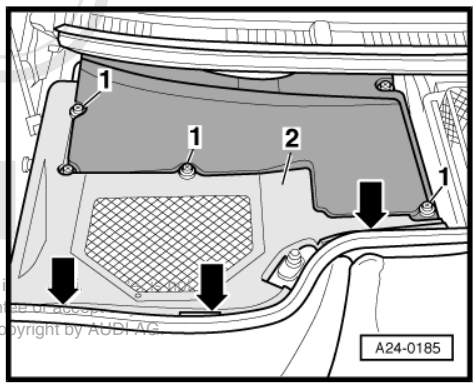

Protected by copyright. Copying for private or commercial purposes, is not permitted unless authorised by AUDI AG. AUDI AG does not guarantee or assume liability with respect to the correctness of information in this document. Copyright by AUDI AG.

– Prise out cover -1- in scuttle panel trim and slacken off rear cross-head bolt -rear right arrow-.

– Slacken off the remaining cross-head bolts -arrows-.

– Detach cover for electronics box in plenum chamber.

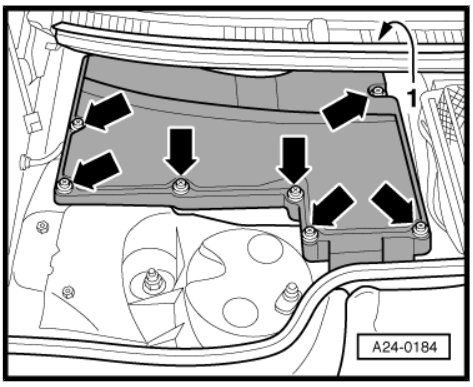

– Screw out bolt -arrow-.

– Disengage retainer.

– Detach diesel direct injection system control unit -J248- -Item 1-. Release and unplug connectors.

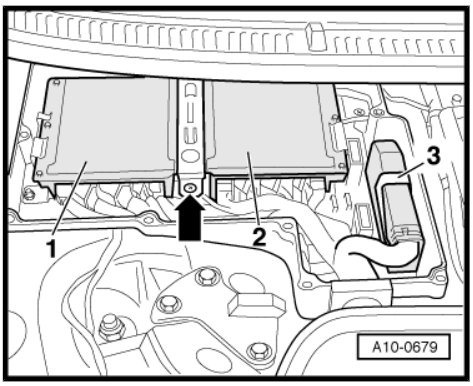

– With ignition switched off, connect test box -V.A.G 1598/30- to connectors of diesel direct injection system control unit -J248- only (not to actual control unit).

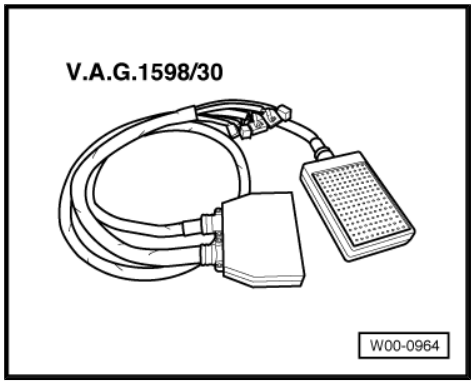

– Check for open circuit and short to earth or positive in the following wiring:

Connector Contact	Test box -V.A.G 1598/30- Socket
-2-	2/14

– Repair wiring if necessary.

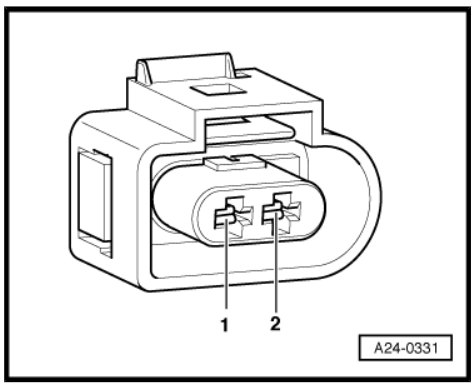

Protected by copyright. Copying for private or commercial purposes, in part or in whole, is not permitted unless authorised by AUDI AG. AUDI AG does not guarantee or accept any liability with respect to the correctness of information in this document. Copyright by AUDI AG.

1.15 Removing and installing hydraulic pump for power steering and hydraulic fan

Special tools and workshop equipment required

- Hose clamps up to Ø 25 mm -3094-
- Pin wrench -3212-
- Drip tray for workshop cranes -VAS 6208- or -V.A.G 1306-

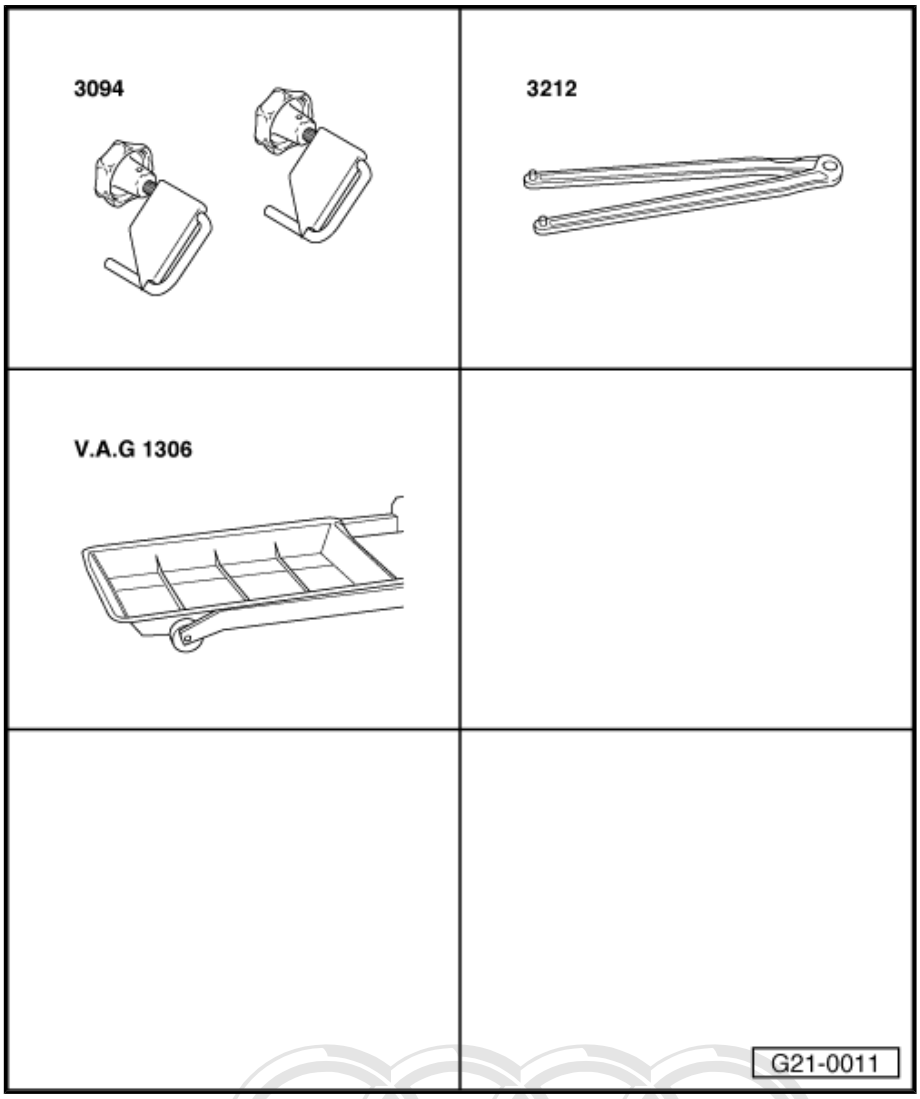

Removing

Note

Re-attach all cable ties unfastened or severed on removal at the same location on installation.

– Remove poly V-belts ⇒ page 36 .

– Unplug green connector -1- for air conditioner compressor magnetic clutch in front of left wheel housing and lay bare wire.

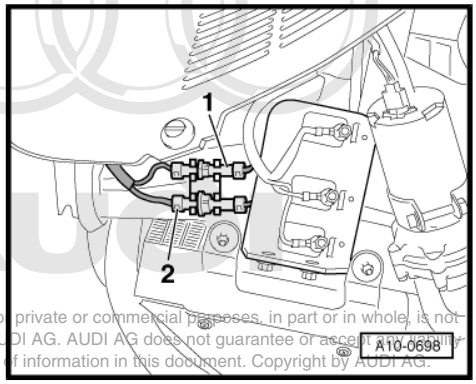

Protected by copyright. Copying for private or commercial purposes, in part or in whole, is not permitted unless authorised by AUDI AG. AUDI AG does not guarantee or accept any liability with respect to the correctness of information in this document. Copyright by AUDI AG.

WARNING

The air conditioner refrigerant circuit is not to be opened.

– Unscrew air conditioner compressor from holder -arrows-, lift clear to side and tie in place at body longitudinal member.
– Place drip tray for workshop cranes -VAS 6208- or -V.A.G 1306- beneath engine.

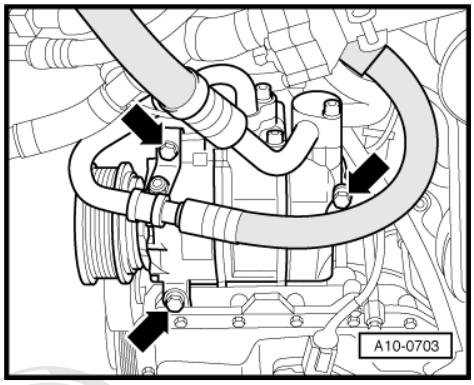

– Use hose clamps -3094- to pinch off both hoses at hydraulic pump and detach hoses.
– Unscrew power steering pressure pipe -arrow-.

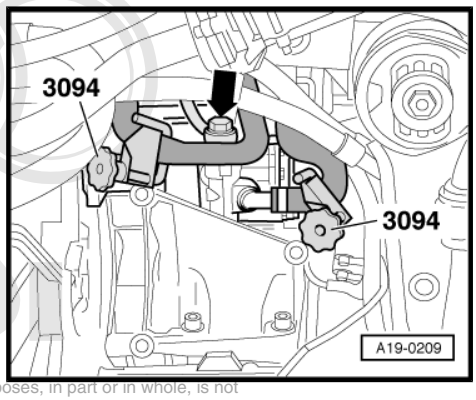

Protected by copyright. Copying for private or commercial purposes, in part or in whole, is not permitted unless authorised by AUDI AG. AUDI AG does not guarantee or accept any liability with respect to the correctness of information in this document. Copyright by AUDI AG.

– Disconnect vacuum hoses -1 ... 3- at charge pressure control solenoid valves.
– Detach charge pressure control solenoid valves from rubber mount at heat shield -arrow-.

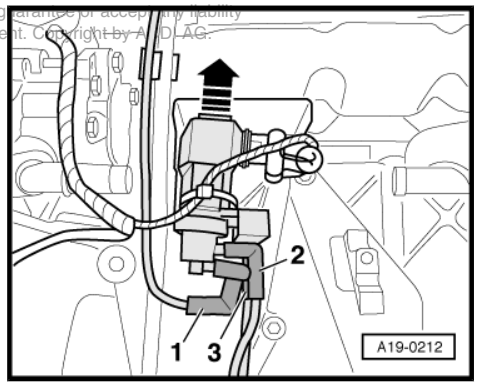

– Unscrew heat shield for solenoid valves from holder for hydraulic pump and air conditioner compressor -2-.
– Lay bare vacuum pipe -1- at guide tube for dipstick.
– Screw out hexagon socket head bolt for hydraulic pump at rear.

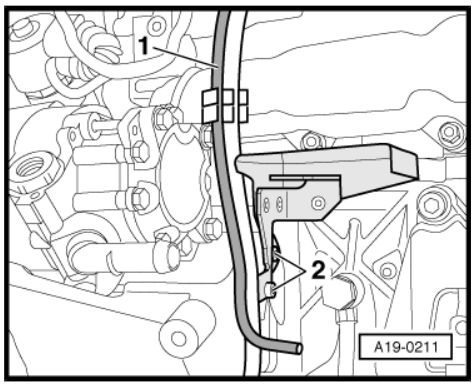

– Detach engine cover -arrows-.

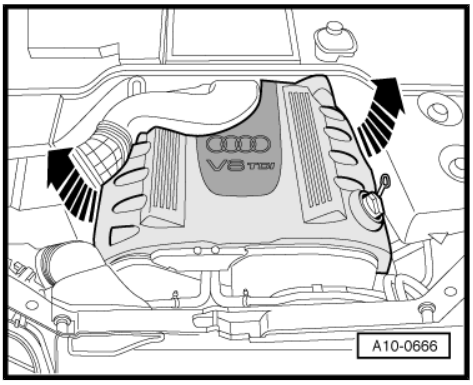

Protected by copyright. Copying for private or commercial purposes, in part or in whole, is not permitted unless authorized by AUDI AG. AUDI AG does not guarantee or accept any liability with respect to the correctness of information in this document. Copyright by AUDI AG.

– Remove cover on left in engine compartment -arrows-.
– Remove top left toothed belt guard ⇒ page 40 .

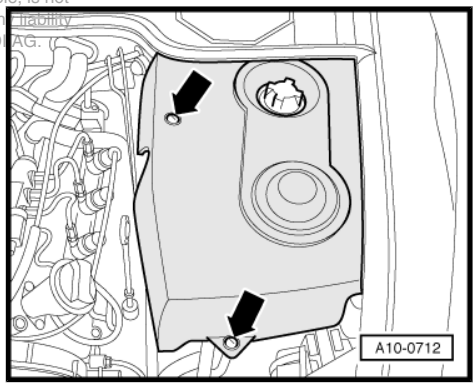

– Use hose clamp -3094- to pinch off pressure pipe to hydraulic fan.
– Unscrew pressure pipe -1-.
– Unplug connector -2- at hydraulic pump and lay bare wire.
– Unscrew holder of pressure control valve for crankcase breather -3- at body.

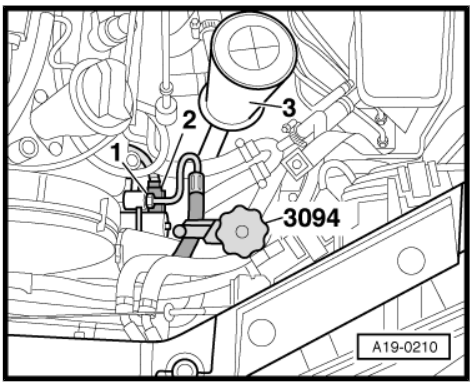

Note

Leave pressure control valve for crankcase breather in position.

– Unscrew and lift off guide tube for dipstick at cylinder head -arrow-.

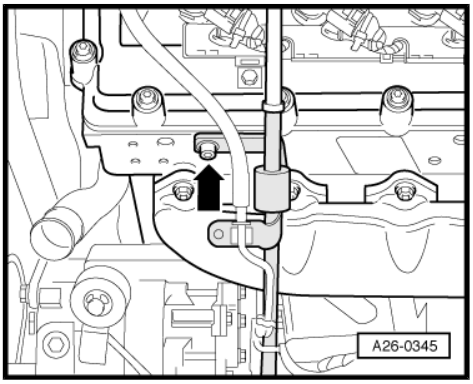

– Screw out bolts -arrows- of poly V-belt pulley for hydraulic pump.

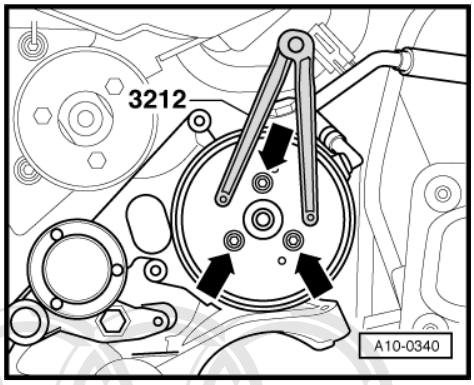

Note

- *When slackening off and tightening bolts, provide support with pin wrench -3212- .*
- *Installation position: Label "front" at poly V-belt pulley facing in direction of travel*

– Unscrew the 2 nuts -arrows-.

– Lift out hydraulic pump.

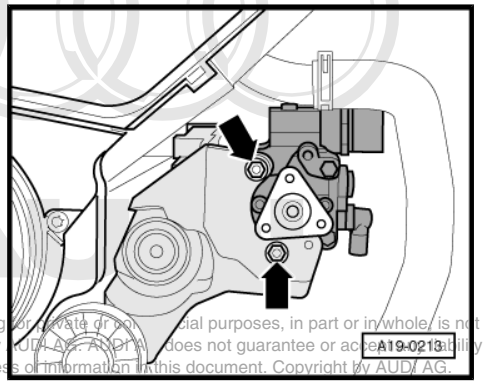

Installing

Install in reverse order; paying attention to the following:

Note

- *Replace gaskets and seals.*
- *Re-attach all cable ties in the same locations on installation.*
- *Secure all hose connections with standard clamps ⇒ Parts catalogue .*

Protected by copyright. Copying for private or commercial purposes, in part or in whole, is not permitted unless authorised by AUDI AG. AUDI AG does not guarantee or accept any liability with respect to the correctness of information in this document. Copyright by AUDI AG.

– Install air conditioner compressor ⇒ Air conditioning system; Rep. Gr. 87 .

– Check alignment of pulleys of hydraulic pump and air conditioner compressor ⇒ page 37 .

– Fit poly V-belt ⇒ page 37 .

– Replenish power steering fluid and bleed steering system ⇒ Running gear, front-wheel drive and four-wheel drive; Rep. Gr. 48 .

Tightening torques

Component	Nm
Hydraulic pump to holder	22
Pulley to hydraulic pump	22
Holder for pressure control valve for crankcase breather to body	10
Hydraulic fan pressure pipe to hydraulic pump	50
Heat shield to holder for hydraulic pump	10
Steering box hydraulic pressure pipe to hydraulic pump	50
Clamps for coolant hoses	2

1.16 Checking electric radiator fan -V7- and actuation

Special tools and workshop equipment required

- Portable multimeter -V.A.G 1526 B- or -V.A.G 1526 A-
- Voltage tester -V.A.G 1527 B-
- Adapter set -V.A.G 1594 C- or -V.A.G 1594 A-
- Vehicle diagnostic, testing and information system -VAS 5051 A- with diagnostic wire -VAS 5051/1-

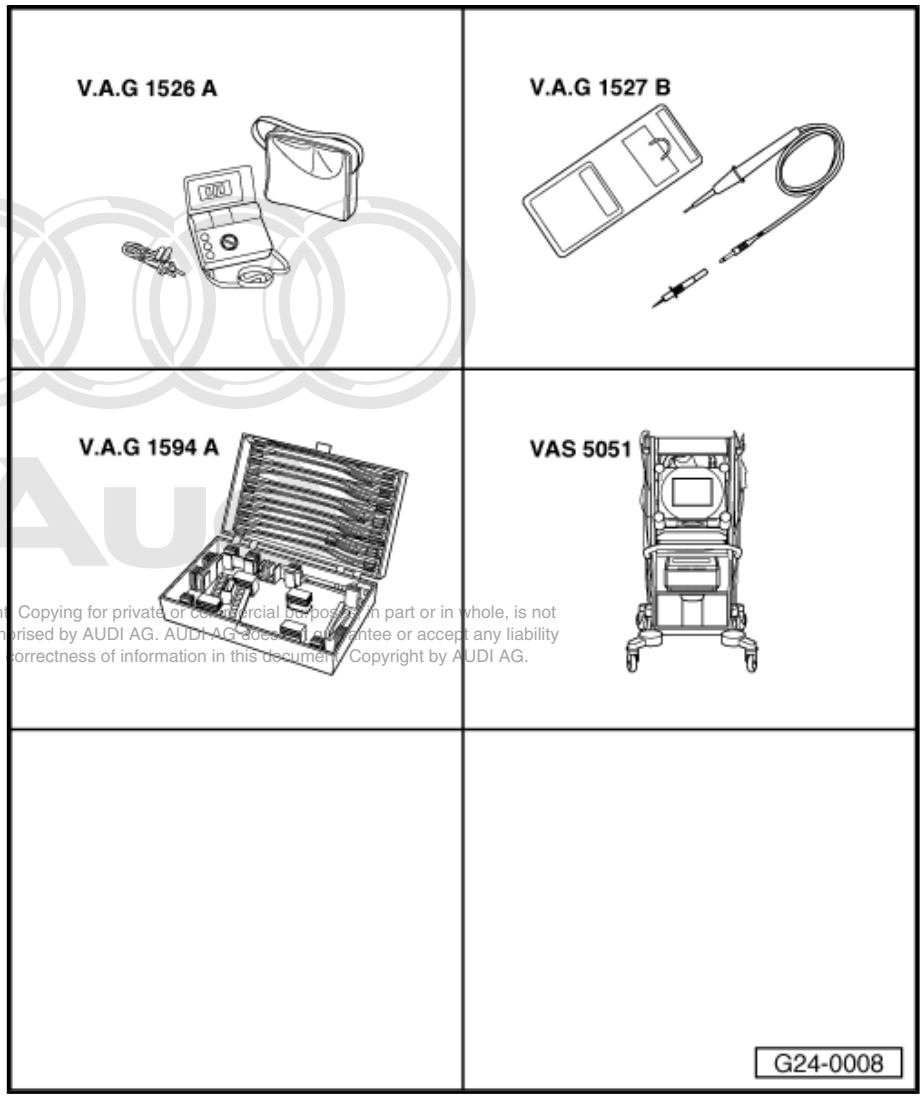

Protected by copyright. Copying for private or commercial purposes, in part or in whole, is not permitted unless authorised by AUDI AG. AUDI AG does not guarantee or accept any liability with respect to the correctness of information in this document. Copyright by AUDI AG.

Test conditions

- Electric fan fuses OK
- Vehicle diagnostic, testing and information system -VAS 5051 A- with diagnostic wire -VAS 5051/1- connected, vehicle self-diagnosis and vehicle system “01 - Engine electronics” selected; when doing this, the ignition must be switched on

Test sequence

Display on -VAS 5051 A-

– In list -1- select function “03 - Final control diagnosis”.

– Keep touching ⇥ key until the 3 relays of the electric radiator fan are consecutively actuated.

- Depending on the relay energised, the electric radiator fan must run at low, medium or high speed.

– Terminate function “03 - Final control diagnosis” by touching ⇤ key and switch off ignition.

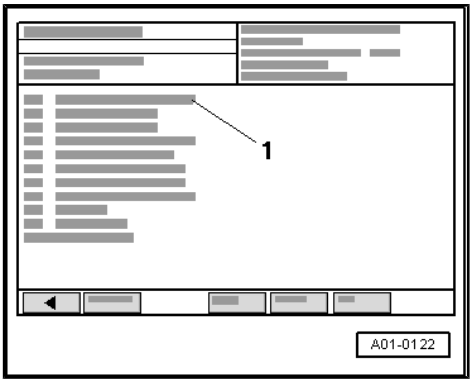

A - If electric radiator fan does not run at all:

– On vehicles with auxiliary heater, screw out bolts -arrows- for attaching exhaust pipe of auxiliary/supplementary heater to noise insulation.

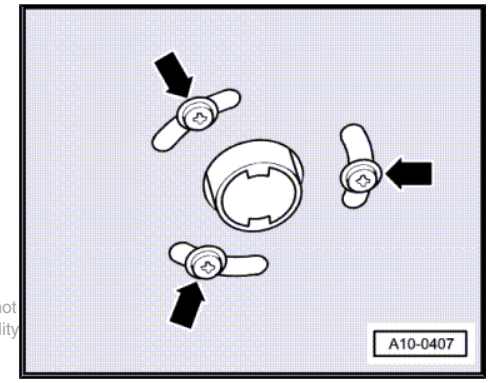

Protected by copyright. Copying for private or commercial purposes, in part or in whole, is not permitted unless authorised by AUDI AG. AUDI AG does not guarantee or accept any liability with respect to the correctness of information in this document. Copyright by AUDI AG.

– Unfasten quick-release fasteners -1- and detach front noise insulation.

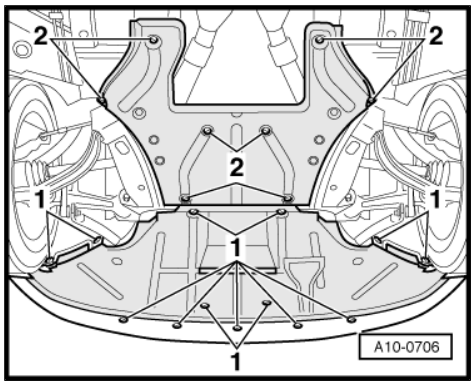

– Unplug connector -2- to radiator fan in front of left wheel housing.

– Connect up voltage tester -V.A.G 1527 B- between contacts 1 and 2 to feed wire connector.

– Repeat function “03 - Final control diagnosis”.

– Keep touching ⇨ key until one of the electric radiator fan relays is actuated.

• The LED must flash slowly.

– Terminate function “03 - Final control diagnosis” by touching ⇦ key and switch off ignition.

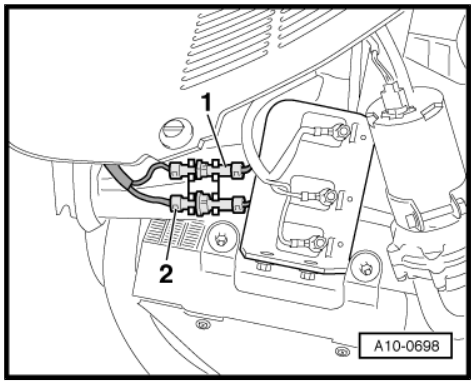

If LED flashes:

– Replace electric radiator fan.

If LED does not flash:

– Check power supply and earth connection of electric radiator fan.

B - If electric radiator fan does not run in one or two speed settings:

– Repeat function “03 - Final control diagnosis”.

– Keep touching ⇨ key until the 3 relays of the electric radiator fan are consecutively actuated.

• The 3 relays of the electric radiator fan must be consecutively energised (audible in driver's footwell).

– Terminate function “03 - Final control diagnosis” by touching ⇦ key and switch off ignition.

If not all relays click:

– Remove driver's storage compartment ⇒ General body repairs, interior; Rep. Gr. 68 .

– Unscrew ABS control unit and lay it aside with wires connected -1-.

– Unscrew holder -2- for ABS control unit and relays.

– Start final control diagnosis again and consecutively actuate the 3 relays -Items 3 … 5- of the electric radiator fan.

– Check power supply and actuation of the relay which does not click in final control diagnosis.

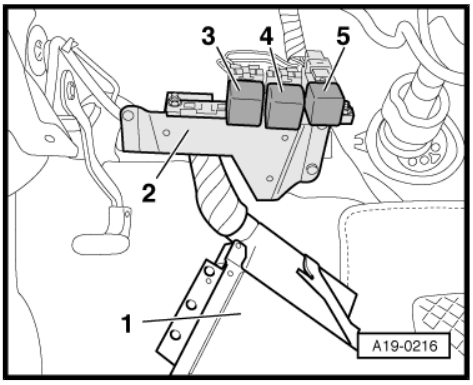

If all relays click:

– On vehicles with auxiliary heater, screw out bolts -arrows- for attaching exhaust pipe of auxiliary/supplementary heater to noise insulation.

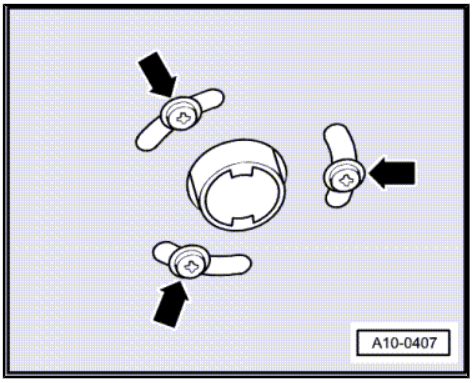

Protected by copyright. Copying for private or commercial purposes, in part or in whole, is not permitted unless authorised by AUDI AG. AUDI AG does not guarantee or accept any liability with respect to the correctness of information in this document. Copyright by AUDI AG.

– Unfasten quick-release fasteners -1- and detach front noise insulation.

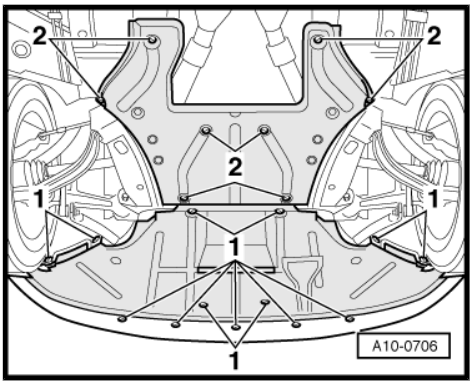

– Unscrew wires at connections -E1 … E3- at radiator fan series resistor -N39- .

– Connect up multimeter (resistance measuring range) between contacts -E1- and -E2-.

• Specification: Approx. 0.45 ... 0.55 Ω

– Connect up multimeter (resistance measuring range) between contacts -E2- and -E3-.

• Specification: Approx. 0.45 ... 0.55 Ω

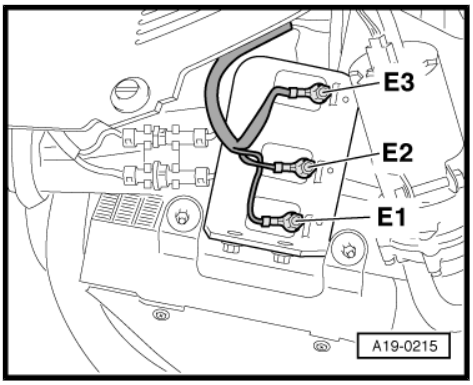

If readings do not match specifications:

– Replace series resistor.

If readings match specifications:

– Use current flow diagram to repair wiring.

1.17 Removing and installing electric radiator fan -V7-

Removing

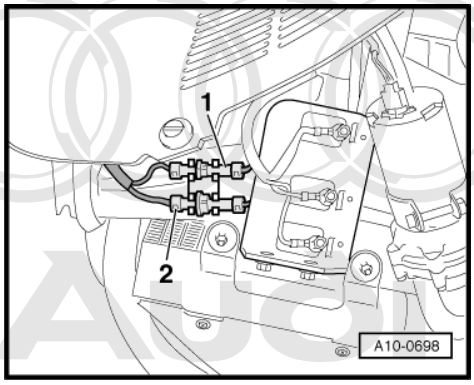

Protected by copyright. Copying for private or commercial purposes, in part or in whole, is not permitted unless authorised by AUDI AG. AUDI AG does not guarantee or accept any liability with respect to the correctness of information in this document. Copyright by AUDI AG.

Note

Re-attach all cable ties unfastened or severed on removal at the same location on installation.

- Pull lock carrier forwards ⇒ page 31 .
- Unplug connector -2- to radiator fan in front of left wheel housing.
- Lay bare wire.
- Remove top right toothed belt guard ⇒ page 40 .
- Unscrew coolant pipe at lock carrier.

Note

Leave coolant pipe in position.

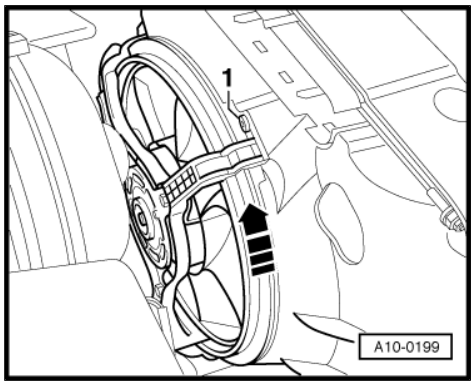

- Remove electric fan by pressing out pin -1- and removing clip.
- Turn electric fan in -direction of arrow- and detach fan.

Installing

Install in reverse order; paying attention to the following:

Note

Re-attach all cable ties in the same locations on installation.

- Install lock carrier with attachments ⇒ General body repairs, exterior; Rep. Gr. 50 .
- Install headlights ⇒ Electrical system; Rep. Gr. 94 .
- Install front bumper ⇒ General body repairs, exterior; Rep. Gr. 63 .
- Check headlight adjustment ⇒ Electrical system; Rep. Gr. 94 .

Tightening torque

Component	Nm
Coolant pipe to lock carrier	10

1.18 Checking relay for fuel cooling pump -V166-

Special tools and workshop equipment required

- Portable multimeter -V.A.G 1526 B- or -V.A.G 1526 A-
- Voltage tester -V.A.G 1527 B-
- Adapter set -V.A.G 1594 C- or -V.A.G 1594 A-
- Test box -V.A.G 1598/30-
- Vehicle diagnostic, testing and information system -VAS 5051 A- with diagnostic wire -VAS 5051/1-

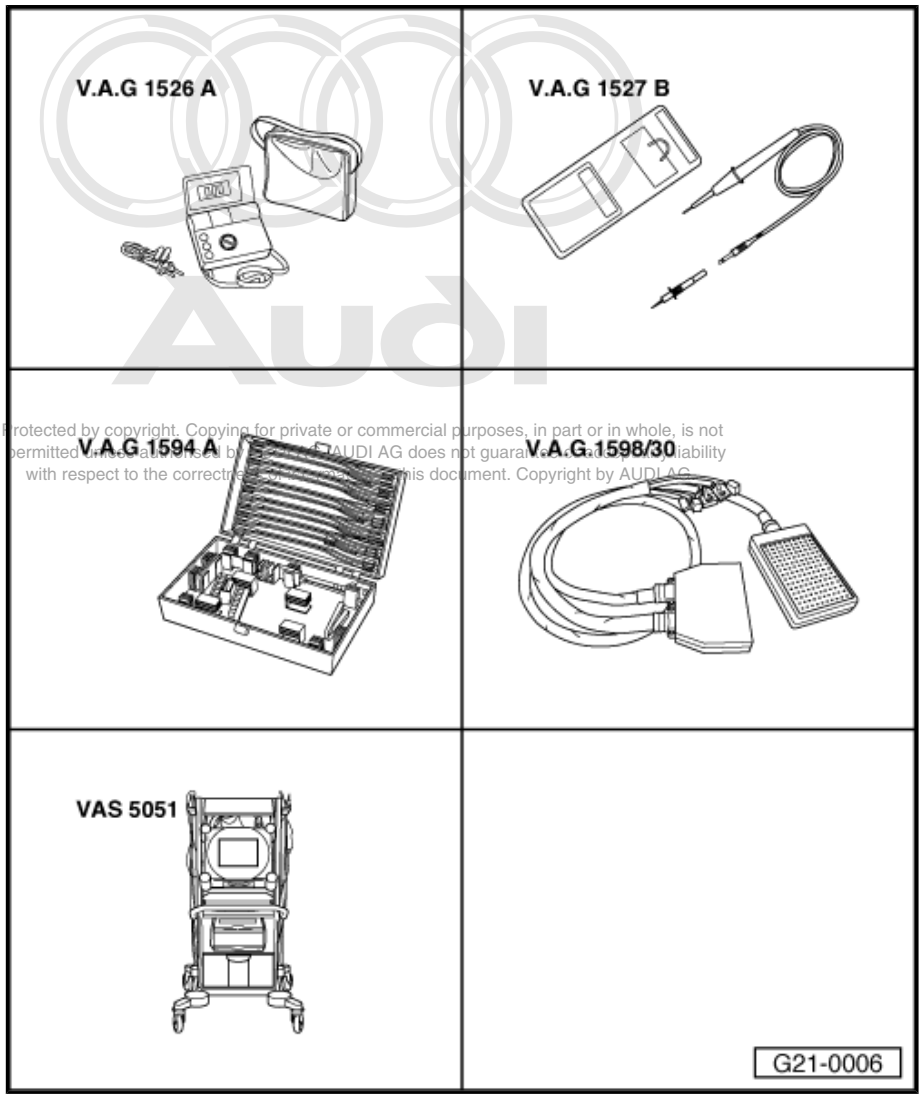

Protected by copyright. Copying for private or commercial purposes, in part or in whole, is not permitted unless authorised by AUDI AG. AUDI AG does not guarantee or assume any liability with respect to the correctness of information in this document. Copyright by AUDI AG.

Test conditions

- Fuse S4 OK (in fuse box, fuse carrier -ST4- - blue)
- Vehicle diagnostic, testing and information system -VAS 5051 A- with diagnostic wire -VAS 5051/1- connected, vehicle self-diagnosis and vehicle system “01 - Engine electronics” selected; when doing this, the ignition must be switched on
- Fault memory interrogated

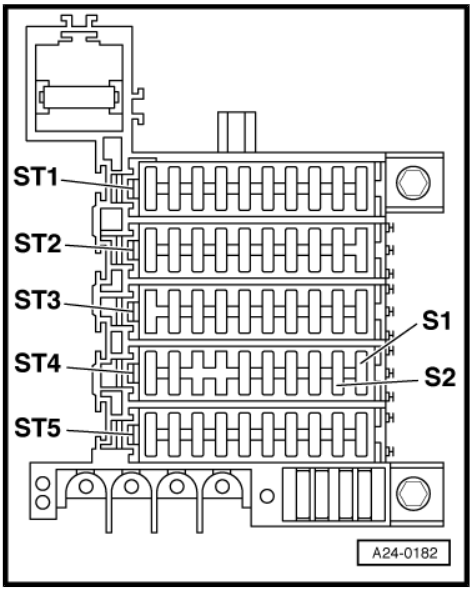

Test sequence

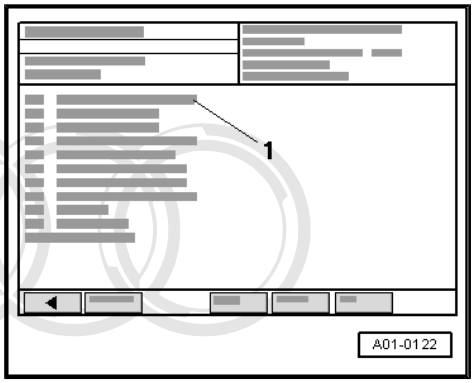

Display on -VAS 5051 A-

– In list -1- select function “03 - Final control diagnosis”.

– Keep touching ⇨ key until fuel cooling pump relay -J445- is actuated.

• The fuel cooling pump relay -J445- (in electronics box in passenger's footwell) must be energised (click) intermittently and the fuel cooling pump -V166- must run intermittently (can be heard at right of engine compartment).

– Terminate function “03 - Final control diagnosis” by touching ⇦ key and switch off ignition.

A - If relay is not energised:

– Check power supply of fuel cooling pump relay -J445- ⇒ page 202 .

– Check actuation of fuel cooling pump relay -J445- ⇒ page 203 .

Protected by copyright. Copying for private or commercial purposes, in part or in whole, is not permitted unless authorised by AUDI AG. AUDI AG does not guarantee or accept any liability with respect to the correctness of information in this document. Copyright by AUDI AG.

B - If relay is energised but fuel cooling pump does not run:

– Check power supply for fuel cooling pump -V166- ⇒ page 204 .

Checking power supply of fuel cooling pump relay -J445-

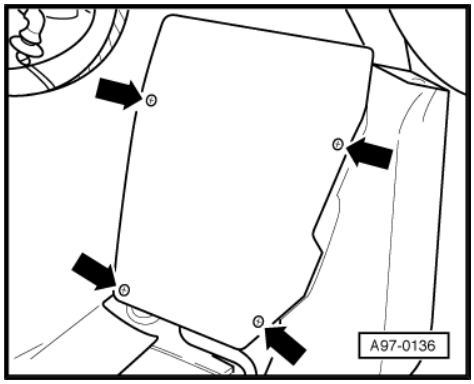

– Take out floor covering in front right footwell.

– Screw out bolts for electronics box cover -arrows- and detach cover.

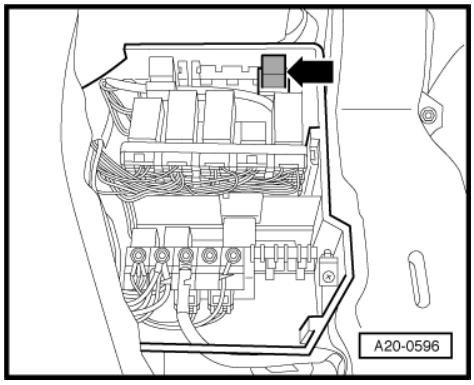

– Detach fuel cooling pump relay -J445- -arrow-.

– First connect up multimeter (voltage measuring range) between relay socket contact -2- and earth and then between relay socket contact -6- and earth.
– Switch on ignition.
• Specification: Approx. battery voltage in each case

If reading does not match specification:

– Use current flow diagram to repair wiring.

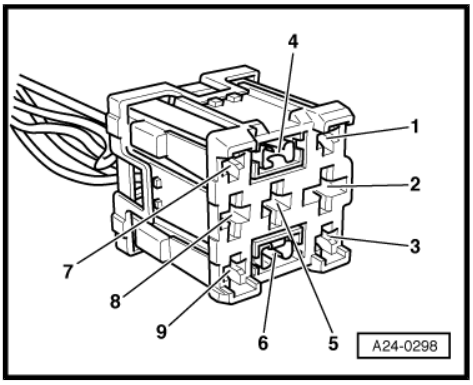

Checking actuation of fuel cooling pump relay -J445-

– Connect up voltage tester -V.A.G 1527 B- between relay socket contact -4- and battery positive.
– Repeat function “03 - Final control diagnosis”.
– Keep touching ⊟ key until fuel cooling pump relay -J445- is actuated.
• LED must flash (does not go out completely).
– Terminate function “03 - Final control diagnosis” by touching ⊟ key and switch off ignition.

If LED flashes but relay is not energised:

– Replace fuel cooling pump relay -J445- .

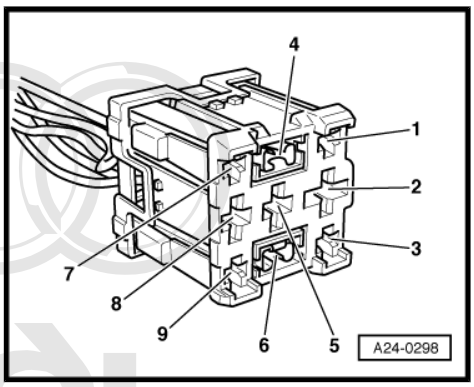

Protected by copyright. Copying for private or commercial purposes, in part or in whole, is not permitted unless authorised by AUDI AG. AUDI AG does not guarantee or accept any liability with respect to the correctness of information in this document. Copyright by AUDI AG.

If LED does not flash:

– Switch off ignition.
– Slacken off cross-head bolts -1- at electronics box in plenum chamber.
– Unclip plenum chamber cover -2- at front at bulkhead -arrows-.
– Detach plenum chamber cover.

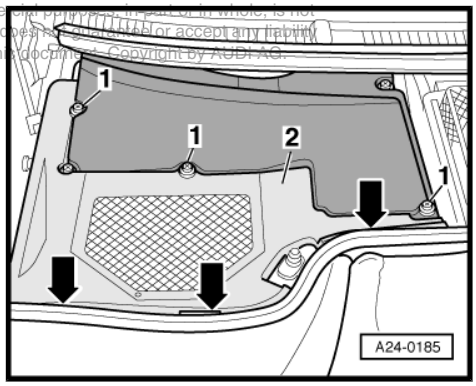

– Prise out cover -1- in scuttle panel trim and slacken off rear cross-head bolt -rear right arrow-.
– Slacken off the remaining cross-head bolts -arrows-.
– Detach cover for electronics box in plenum chamber.

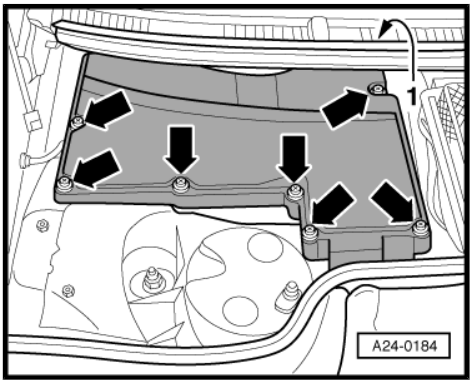

– Screw out bolt -arrow-.

– Disengage retainer.

– Detach diesel direct injection system control unit 2 -J494- -Item 2-. Release and unplug connectors.

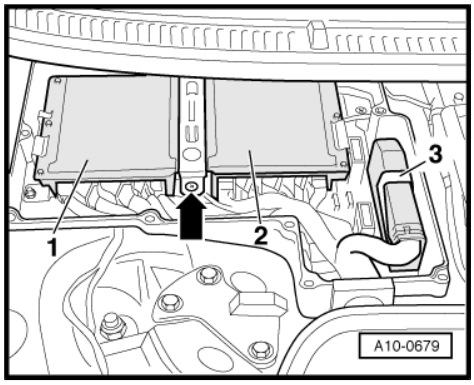

– With ignition switched off, connect test box -V.A.G 1598/30- to connectors of diesel direct injection system control unit 2 -J494- only (not to actual control unit).

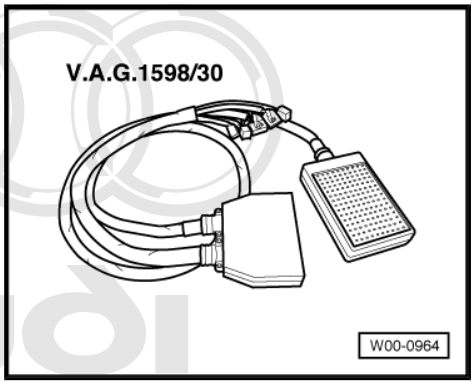

– Check for open circuit and short to earth or positive in the following wiring:

The reproduction of this document for private or commercial purposes, in part or in whole, is not permitted unless authorised by AUDI AG. AUDI AG does not guarantee or accept any liability with respect to the correctness of information in this document. Copyright by AUDI AG.

Relay socket Contact	Test box -V.A.G 1598/30- Socket
-4-	2/02

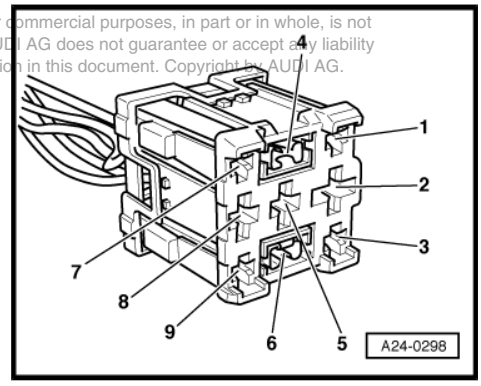

– Repair wiring if necessary.

If no fault is found in wire:

– Replace engine control unit.

Checking power supply for fuel cooling pump

– On vehicles with auxiliary heater, screw out bolts -arrows- for attaching exhaust pipe of auxiliary/supplementary heater to noise insulation.

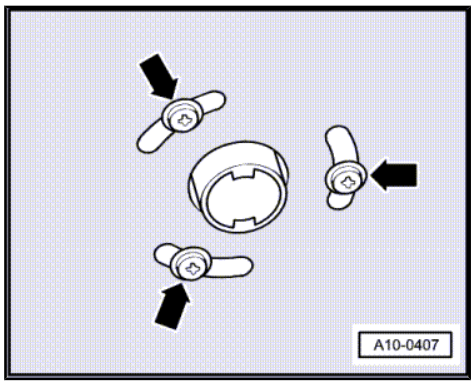

– Unfasten quick-release fasteners -1- and detach front noise insulation.

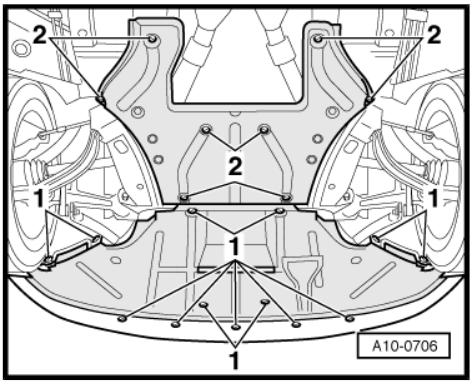

– Unplug connector -arrow- at fuel cooling pump.

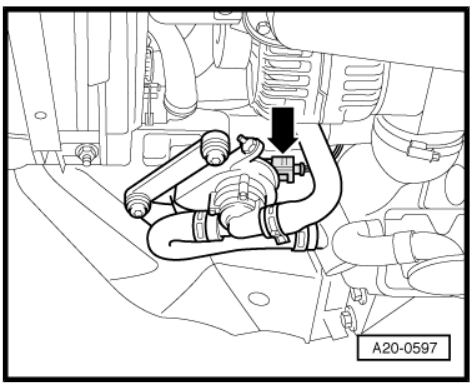

– Connect up voltage tester -V.A.G 1527 B- between contacts -1- and -2-.

– Repeat function “03 - Final control diagnosis”.

– Keep touching ⇥ key until fuel cooling pump relay -J445- is actuated.

• The LED must flash.

– Terminate function “03 - Final control diagnosis” by touching ⇤ key and switch off ignition.

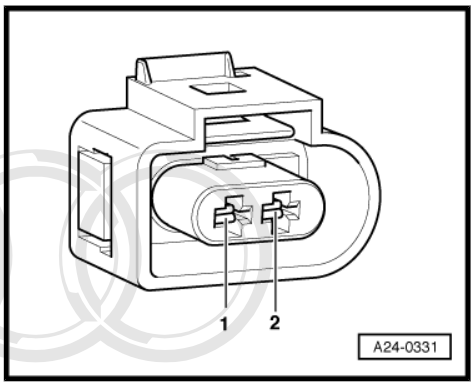

If LED does not flash:

– Check for open circuit in wiring between connector of fuel cooling pump and fuel cooling pump relay -J445- (in electronics box in passenger's footwell).

– Check for open circuit in wiring between connector of fuel cooling pump -V166- and earth point.

If no fault is found:

– Replace fuel cooling pump.

Protected by copyright. Copying for private or commercial purposes, in part or in whole, is not permitted unless authorised by AUDI AG. AUDI AG does not guarantee or accept any liability with respect to the correctness of information in this document. Copyright by AUDI AG.

1.19 Removing and installing fuel cooler

Special tools and workshop equipment required

♦ Hose clamps up to Ø 25 mm -3094-

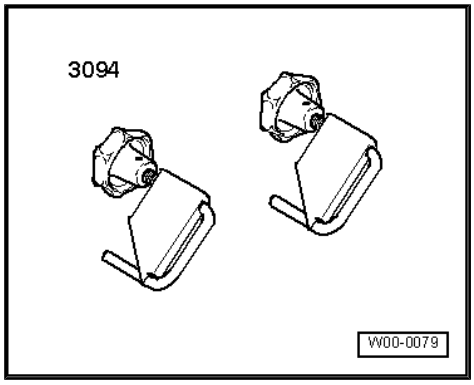

♦ Drip tray for workshop cranes -VAS 6208- or -V.A.G 1306-

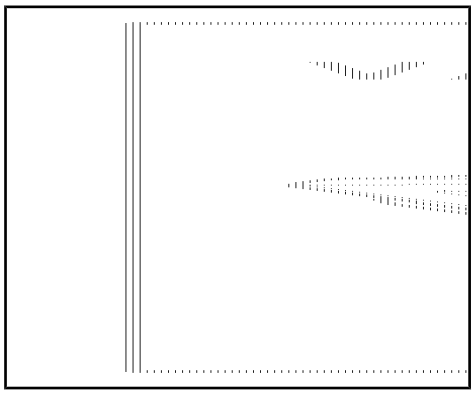

Removing

– Remove front bumper ⇒ General body repairs, exterior; Rep. Gr. 63 .

– Screw out bolts -arrows- of air duct and detach.

– Place drip tray for workshop cranes -VAS 6208- or -V.A.G 1306- beneath engine.

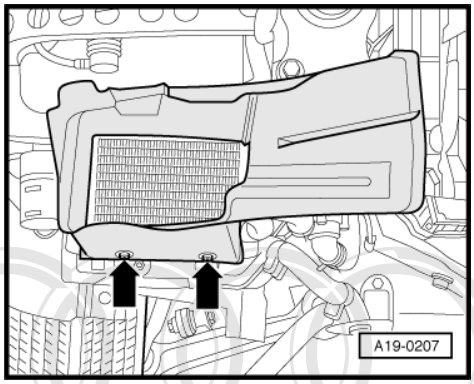

Protected by copyright. Copying for private or commercial purposes, in part or in whole, is not permitted unless authorised by AUDI AG. AUDI AG does not guarantee or accept any liability with respect to the correctness of information in this document. Copyright by AUDI AG.

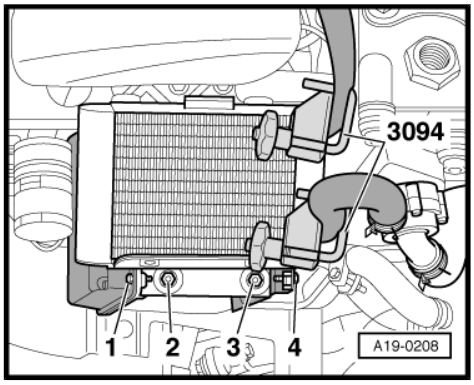

– Use hose clamps up to Ø 25 mm -3094- to pinch off coolant hoses at fuel cooler.
– Detach hoses.
– Screw out bolts -1 … 4-.
– Pull bottom of cooler forwards slightly and disengage from mount at top.

Installing

Install in reverse order; paying attention to the following:

Note

Secure all hose connections with standard clamps ⇒ Parts catalogue .

– Install front bumper ⇒ General body repairs, exterior; Rep. Gr. 63 .
– Replenish coolant ⇒ page 168 .

Tightening torques

Component		Nm
Fuel cooler to holder	M5	5
	M6	10
Clamps for coolant hoses		2

Protected by copyright. Copying for private or commercial purposes, in part or in whole, is not permitted unless authorised by AUDI AG. AUDI AG does not guarantee or accept any liability with respect to the correctness of information in this document. Copyright by AUDI AG.

1.20 Checking charge air cooling pump -V188-

Special tools and workshop equipment required

- Portable multimeter -V.A.G 1526 B- or -V.A.G 1526 A-
- Voltage tester -V.A.G 1527 B-
- Adapter set -V.A.G 1594 C- or -V.A.G 1594 A-
- Test box -V.A.G 1598/30-
- Vehicle diagnostic, testing and information system -VAS 5051 A- with diagnostic wire -VAS 5051/1-

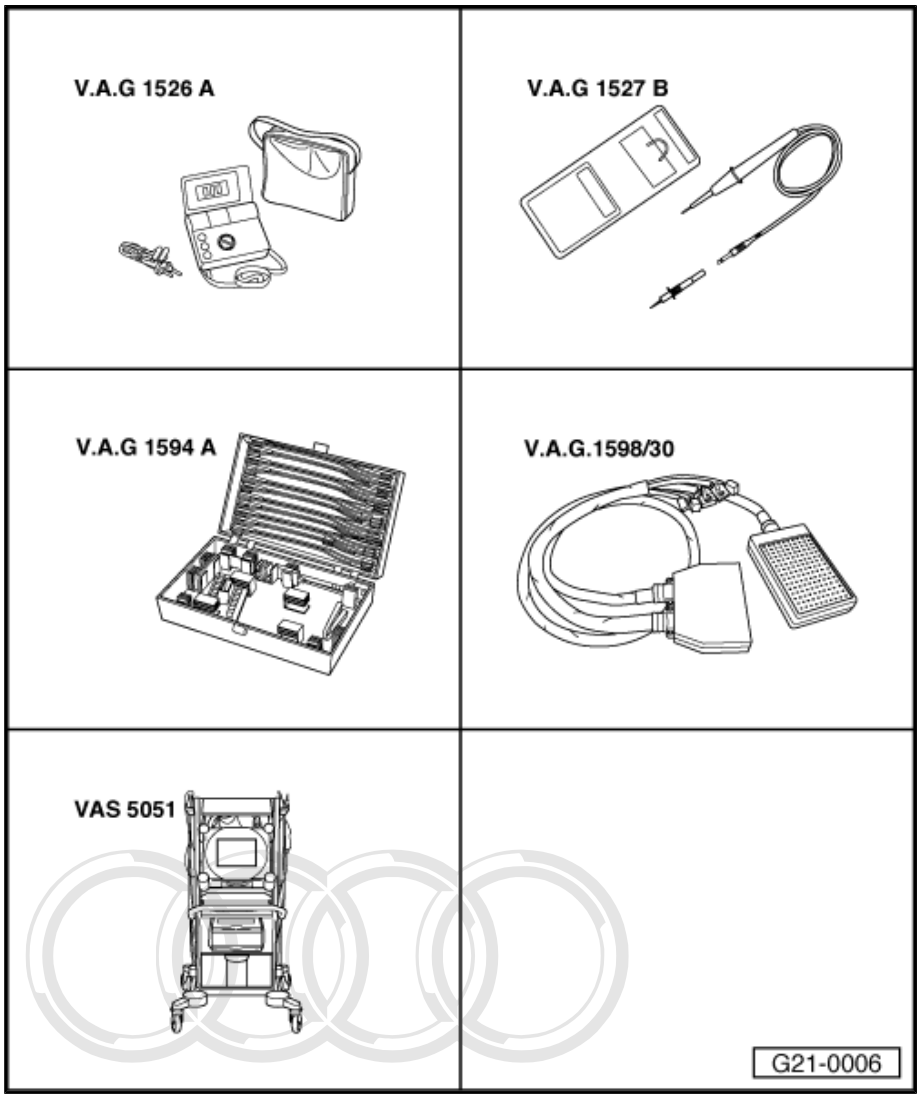

Test conditions

- Pump fuse OK (in relay and fuse carrier in electronics box in plenum chamber)
- Vehicle diagnostic, testing and information system VAS 5051 A- with diagnostic wire -VAS 5051/1- connected, vehicle self-diagnosis and vehicle system “01 - Engine electronics” selected; when doing this, the ignition must be switched on
- Fault memory interrogated

Protected by copyright. Copying for private or commercial purposes, in part or in whole, is not permitted unless authorised by AUDI AG. AUDI AG does not guarantee or accept any liability with respect to the correctness of information in this document. Copyright by AUDI AG.

Test sequence

Display on -VAS 5051 A-

– In list -1- select function “03 - Final control diagnosis”.

– Keep touching ⇨ key until charge air cooling pump relay -J536- is actuated.

• The charge air cooling pump relay -J536- (in relay and fuse carrier in electronics box in plenum chamber) must be energised (click) intermittently and the charge air cooling pump -V188- must run intermittently (can be heard at left of engine compartment).

– Terminate function “03 - Final control diagnosis” by touching ⇦ key and switch off ignition.

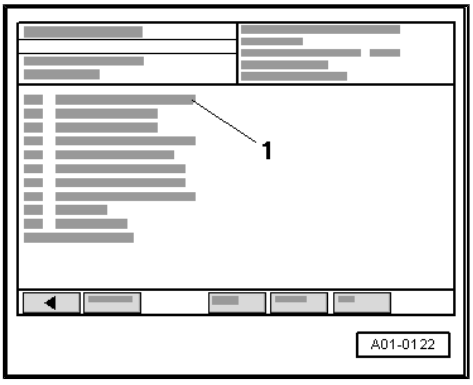

A - If relay is not energised:

– Check power supply of charge air cooling pump relay -J536- ⇒ page 209 .

– Check actuation of charge air cooling pump relay -J536- ⇒ page 210 .

B - If relay is energised but charge air cooling pump -V188- does not run:

– Check power supply for charge air cooling pump -V188- ⇒ page 211 .

Checking power supply of charge air cooling pump relay -J536-

– Slacken off cross-head bolts -1- at electronics box in plenum chamber.

– Unclip plenum chamber cover -2- at front at bulkhead -arrows-.

– Detach plenum chamber cover.

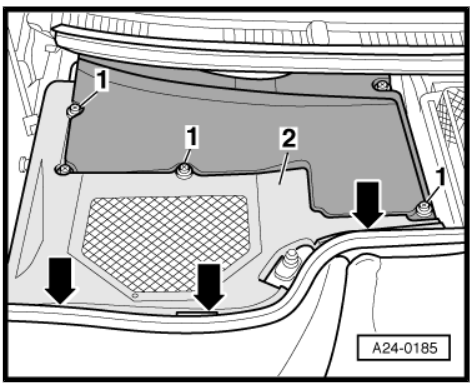

– Prise out cover -1- in scuttle panel trim and slacken off rear cross-head bolt -rear right arrow-.

– Slacken off the remaining cross-head bolts -arrows-.

– Detach cover for electronics box in plenum chamber.

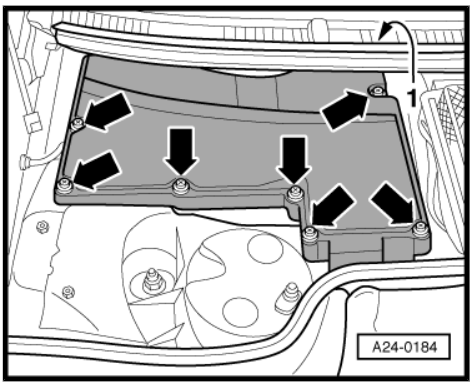

Protected by copyright. Copying for private or commercial purposes, in part or in whole, is not permitted unless authorised by AUDI AG. AUDI AG does not guarantee or accept any liability with respect to the correctness of information in this document. Copyright by AUDI AG.

– Screw out bolt -arrow-.
– Disengage retainer.
– Lay aside diesel direct injection system control unit 2 -J494- -Item 2- with connectors attached.

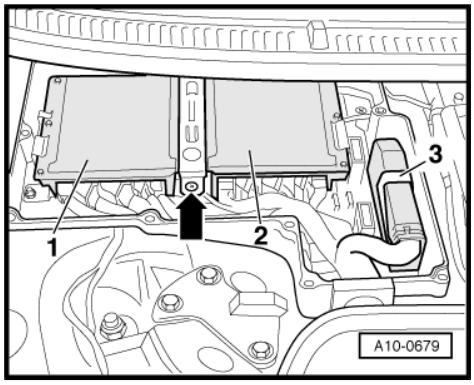

– Pull charge air cooling pump relay -J536- -arrow- out of relay and fuse carrier in electronics box in plenum chamber.

– First connect up multimeter (voltage measuring range) between relay socket contact -2- and earth and then between relay socket contact -6- and earth.
– Switch on ignition.
• Specification: approx. battery voltage

If reading does not match specification:

– Use current flow diagram to repair wiring.

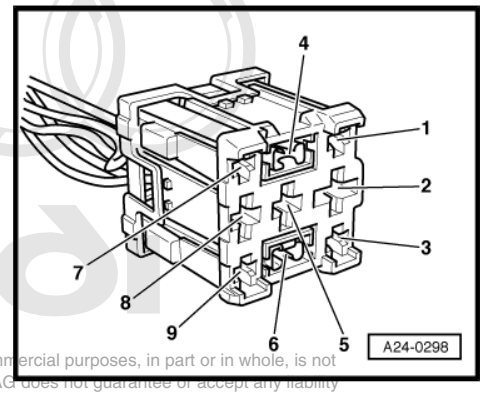

Protected by copyright. Copying for private or commercial purposes, in part or in whole, is not permitted unless authorised by AUDI AG. AUDI AG does not guarantee or accept any liability with respect to the correctness of information in this document. Copyright by AUDI AG.

Checking actuation of charge air cooling pump relay -J536-

– Connect up voltage tester -V.A.G 1527 B- between relay socket contact -6- and battery positive.
– Repeat function “03 - Final control diagnosis”.
– Keep touching ⇥ key until charge air cooling pump relay -J536- is actuated.
• LED must flash (does not go out completely).
– Terminate function “03 - Final control diagnosis” by touching ⇤ key and switch off ignition.

If LED flashes but relay is not energised:

– Replace charge air cooling pump relay -J536- .

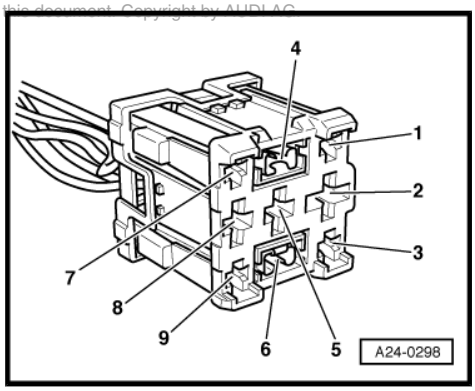

If LED does not flash:

– Detach diesel direct injection system control unit -J248- -1-. Release and unplug connectors.

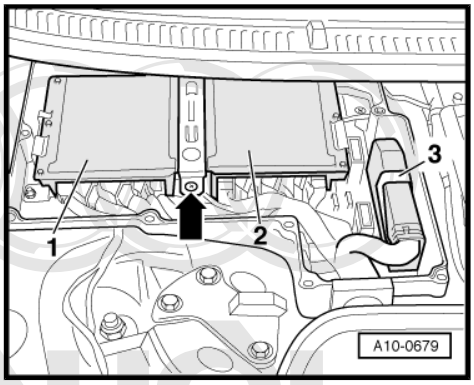

– With ignition switched off, connect test box -V.A.G 1598/30- to connectors of diesel direct injection system control unit -J248- only (not to actual control unit).

Protected by copyright. Copying for private or commercial purposes, in part or in whole, is not permitted unless authorised by AUDI AG. AUDI AG does not guarantee or accept any liability with respect to the correctness of information in this document. Copyright by AUDI AG.

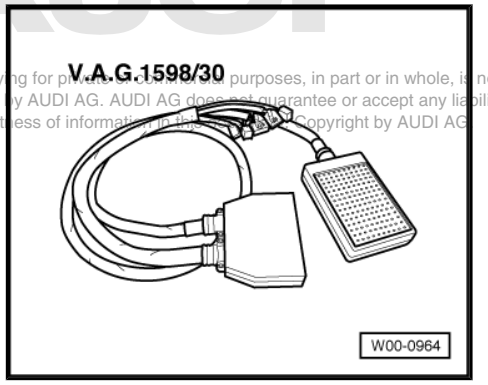

– Check for open circuit and short to earth or positive in the following wiring:

Relay socket Contact	Test box -V.A.G 1598/30- Socket
-4-	2/02

– Repair wiring if necessary.

If no fault is found in wire:

– Replace engine control unit.

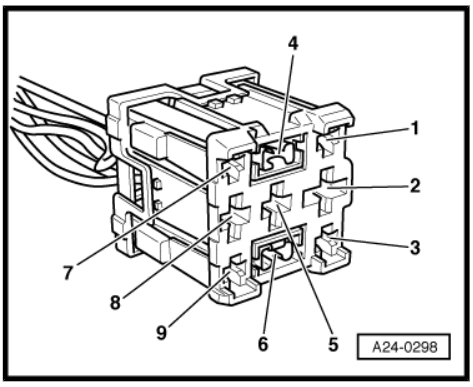

Checking power supply for charge air cooling pump -V188-

– On vehicles with auxiliary heater, screw out bolts -arrows- for attaching exhaust pipe of auxiliary/supplementary heater to noise insulation.

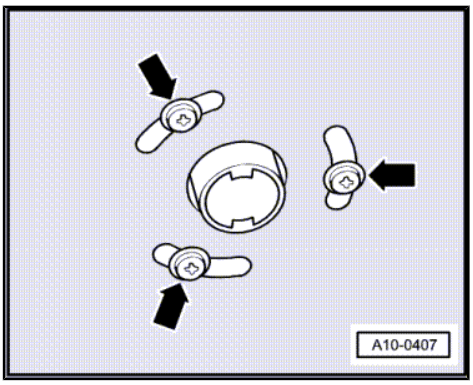

– Unfasten quick-release fasteners -1- and detach front noise insulation.

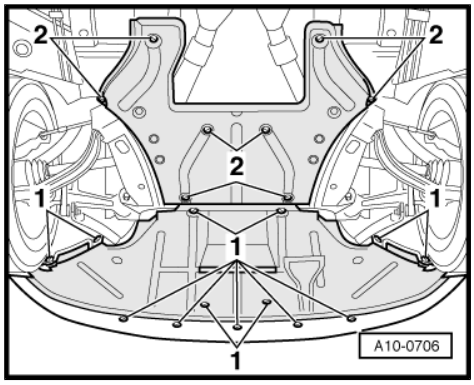

– Unplug connector at charge air cooling pump -V188- -arrow-.

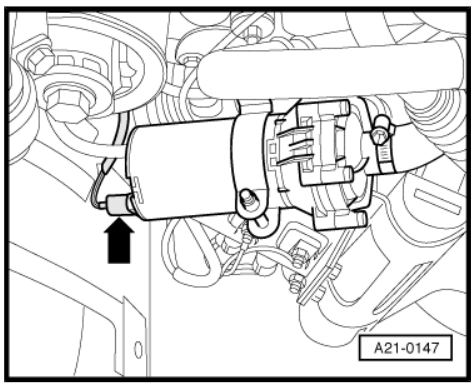

– Connect up voltage tester -V.A.G 1527 B- between contacts 1 and 2.

– Repeat function “03 - Final control diagnosis”.

– Keep touching ⇥ key until charge air cooling pump relay -J536- is actuated.

• The LED must flash.

– Terminate function “03 - Final control diagnosis” by touching ⇤ key and switch off ignition.

If LED does not flash:

– Check for open circuit in wiring between connector of charge air cooling pump -V188- and charge air cooling pump relay -J536- (in relay and fuse carrier in electronics box in plenum chamber).

– Check for open circuit in wiring between connector of charge air cooling pump -V188- and earth point.

If no fault is found:

– Replace charge air cooling pump.

1.21 Removing and installing charge air cooler

Special tools and workshop equipment required

♦ Hose clamps up to Ø 25 mm -3094-

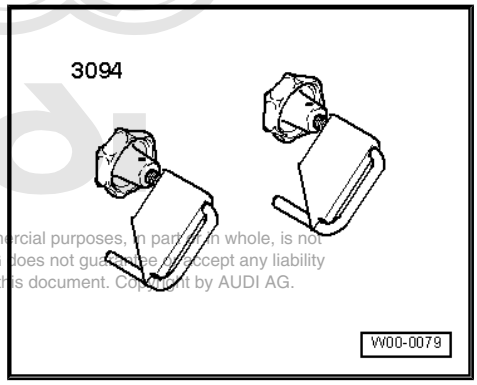

Protected by copyright. Copying for private or commercial purposes, in part or in whole, is not permitted unless authorised by AUDI AG. AUDI AG does not guarantee or accept any liability with respect to the correctness of information in this document. Copyright by AUDI AG.

♦ Drip tray for workshop cranes -VAS 6208- or -V.A.G 1306-

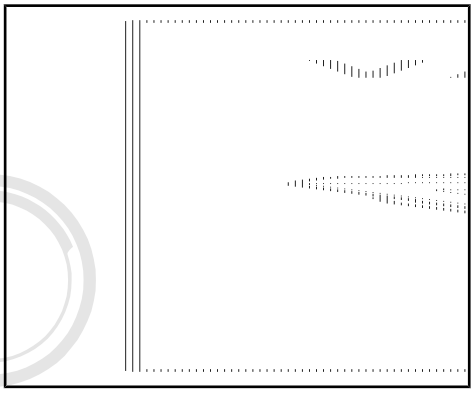

Protected by copyright. Copying for private or commercial purposes, in part or in whole, is not permitted unless authorised by AUDI AG. AUDI AG does not guarantee or accept any liability with respect to the correctness of information in this document. Copyright by AUDI AG.

Removing

– Remove front bumper ⇒ General body repairs, exterior; Rep. Gr. 63 .

– Unplug headlight and left turn signal indicator connectors -arrows-.

– Lay bare wires.

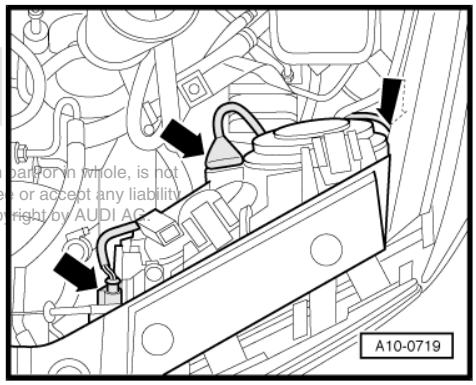

– Unscrew trim -arrow- and detach to front.

– Remove headlight.

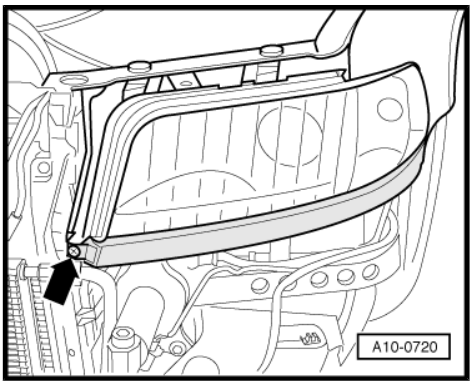

– Place drip tray for workshop cranes -VAS 6208- or -V.A.G 1306- beneath engine.

– Use hose clamps -3094- to pinch off coolant hoses at top of fuel cooler.

– Detach hoses.

– Unscrew nut at top -arrow-.

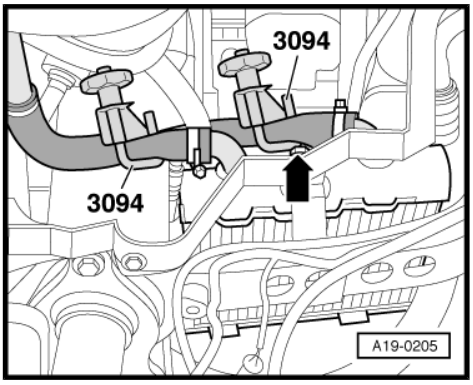

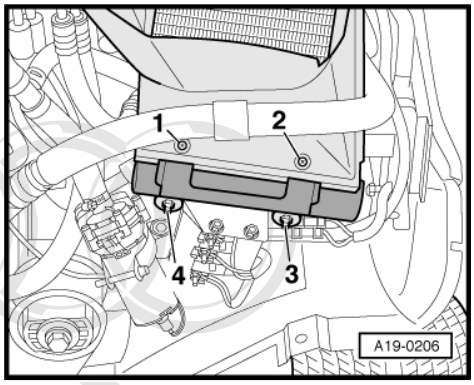

– Screw out air duct bolts -1- and -2-.
– Detach air duct.
– Unscrew nuts -3- and -4-.
– Detach cooler.

Installing

Install in reverse order; paying attention to the following:

Note

Secure all hose connections with standard clamps ⇒ Parts catalogue .

– Install front bumper ⇒ General body repairs, exterior; Rep. Gr. 63 .
– Check headlight adjustment ⇒ Electrical system; Rep. Gr. 94 .
– Replenish coolant ⇒ page 168 .

Protected by copyright. Copying for private or commercial purposes, in part or in whole, is not permitted without the prior consent of AUDI AG. AUDI AG does not guarantee or accept any liability with respect to the correctness of information in this document. Copyright by AUDI AG.

Tightening torques

Component	Nm
Charge air cooler to holder	10
Clamps for coolant hoses	2

21 – Turbocharging/supercharging

1 Checking charge air system with turbocharger

Note

- *Heed rules for cleanliness ⇒ page 237 .*
- *Replace gaskets, seals and self-locking nuts.*
- *There must not be any leaks in the charge air system.*
- *Hose connections and hoses for charge air system must be free of oil and grease before assembly. Use is never to be made of lubricant.*
- *Secure all hose connections with standard clamps ⇒ Parts catalogue .*

1.1 Notes on safety

Note the following if testers and measuring instruments have to be used during a test drive:

WARNING

- ***Always attach the testers and measuring instruments to the rear seat and have them operated from there by a second person.***
- ***If testers and measuring instruments were to be operated from the front passenger's seat, the person sitting there could be injured by triggering of the front passenger's air-bag in an accident.***

1.2 Test requirements for checking turbocharging

- Coolant temperature min. 85 °C, checking ⇒ Rep. Gr. 01
- Engine control unit fault memory interrogated ⇒ Rep. Gr. 01
- Exhaust gas recirculation system OK, checking ⇒ page 270

Protected by copyright. Copying for private or commercial purposes, in part or in whole, is not permitted unless authorised by AUDI AG. AUDI AG does not guarantee or accept any liability with respect to the correctness of information in this document. Copyright by AUDI AG.

Note

Reliable values cannot be obtained when checking turbocharging if the exhaust gas recirculation system is defective.

- No leaks on inlet and exhaust end; effects of leakage ⇒ page 216
- Control pipe to charge pressure control valve not clogged, loose or leaking
- No faults in engine or injection system, e.g. compression or unit injectors

1.3 Effects of leakage on inlet and exhaust end

Leakage upstream of air mass meter

Possible sources of trouble:

1 - Air intake hose between air cleaner housing and top air pipe

2 - Sealing ring between top and rear air pipes

3 - Sealing rings between rear air pipe and air mass meters

4 - Air mass meter/rear air pipe connector loose

Effects: Measurement error due to contamination of air mass meters

Leakage downstream of air mass meter

Possible sources of trouble:

1 - Connecting hoses between air mass meters and turbochargers

2 - Sealing ring between air pipe and turbocharger

Effects: Loss of power

Leakage downstream of turbocharger

Possible sources of trouble:

1 - Sealing rings between turbochargers and air pipes

2 - Connecting hoses between air pipes and intake manifold

3 - Gaskets between intake manifold and cylinder heads

Effects: Diesel smoke

Leakage on exhaust end

Possible sources of trouble:

1 - Exhaust gas recirculation system components

2 - Turbocharger/exhaust manifold connection

3 - Exhaust manifold/cylinder head connection

Effects: Inadequate charge pressure, possibly exhaust odour, traces of soot in engine compartment

Protected by copyright. Copying for private or commercial purposes, in part or in whole, is not permitted unless authorised by AUDI AG. AUDI AG does not guarantee or accept any liability with respect to the correctness of information in this document. Copyright by AUDI AG.

1.4 Checking turbocharger and charge pressure control

Special tools and workshop equipment required

- Adapter set -V.A.G 1318/11-
- Vacuum hand pump with accessories -V.A.G 1390-
- Turbocharger tester - V.A.G 1397 A-
- Portable multimeter - V.A.G 1526 B- or -V.A.G 1526 A-
- Adapter set -V.A.G 1594 C- or -V.A.G 1594 B-
- Test box -V.A.G 1598/30-

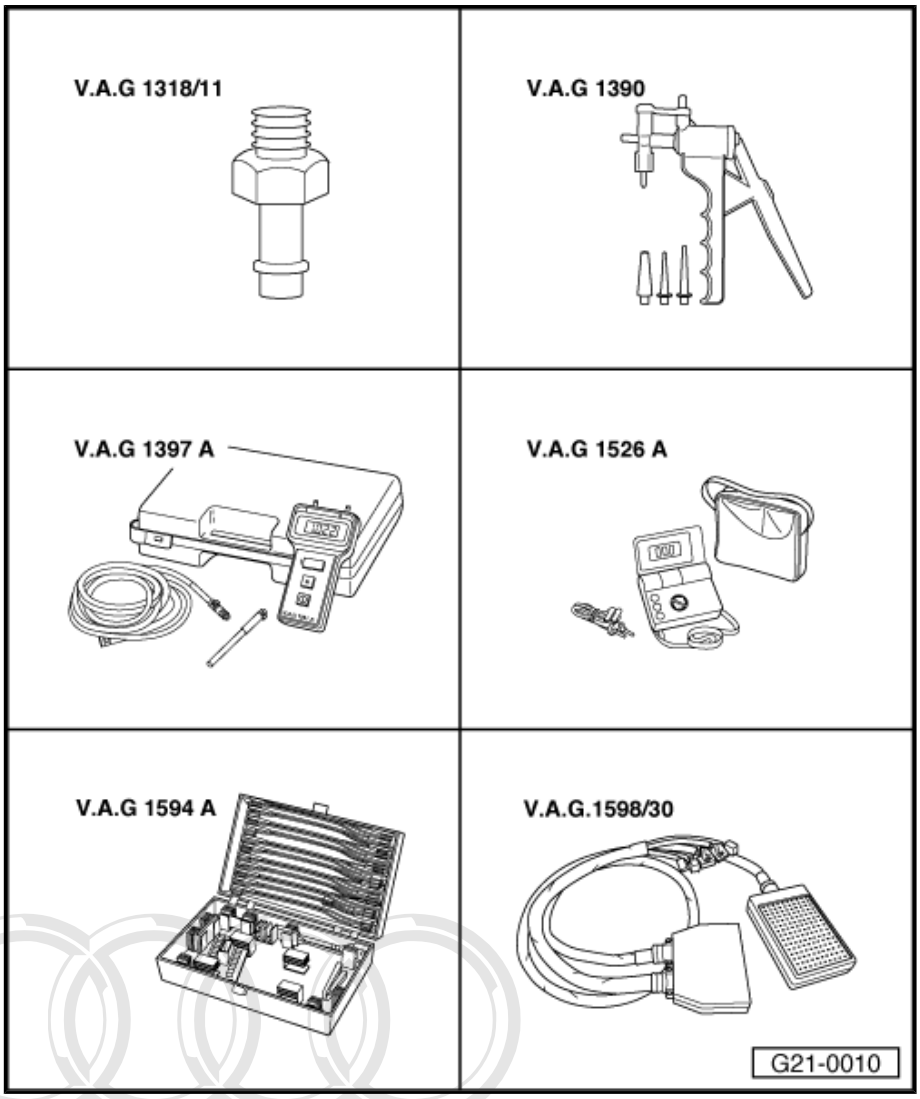

- Vehicle diagnostic, testing and information system - VAS 5051 A- with diagnostic wire -VAS 5051/1-

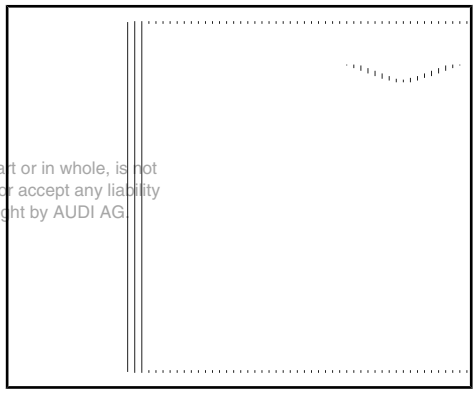

Protected by copyright. Copying for private or commercial purposes, in part or in whole, is not permitted unless authorised by AUDI AG. AUDI AG does not guarantee or accept any liability with respect to the correctness of information in this document. Copyright by AUDI AG.

Test condition

- Vehicle diagnostic, testing and information system - VAS 5051 A- with diagnostic wire -VAS 5051/1- connected, vehicle self-diagnosis and vehicle system “01 - Engine electronics” selected; the engine must be idling when doing so

Note

Checking "uniform turbocharger operation" as described in the following permits effective fault-finding with little outlay.

Checking uniform turbocharger operation

- The air mass throughput in the left/right cylinder bank is detected separately by the left/right air mass meter and can be simultaneously observed in "measured value block 033".
- The air mass provides information on operation of the turbochargers. If there are considerable differences between the right and left cylinder bank air mass at approx. 3100 rpm, there may be a turbocharger fault at the cylinder bank at which the lower air mass is displayed.

Display on -VAS 5051 A-

– From list -1-, select function "08 - Reading measured value block".

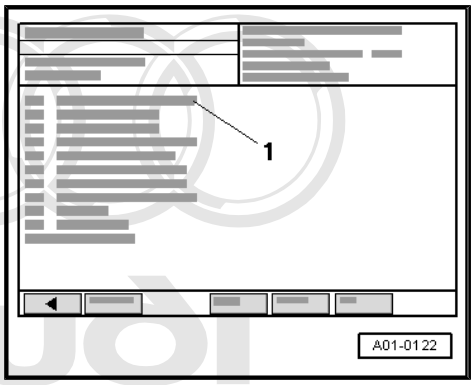

Display on -VAS 5051 A-

– Use keypad -2- to enter "033" for "Display group 033" and confirm by touching Q key.

1 - Enter display group

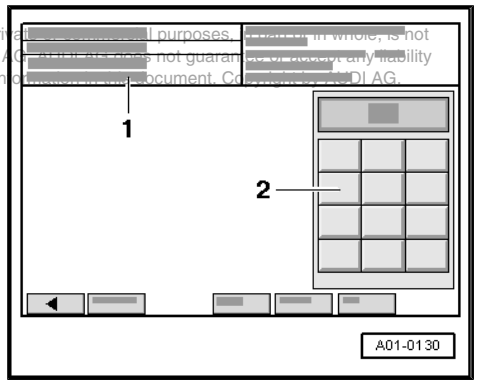

Protected by copyright. Copying for private or commercial purposes, in part or in whole, is not permitted unless authorised by AUDI AG. AUDI AG does not guarantee or assume any liability with respect to the correctness of information in this document. Copyright by AUDI AG.

Display on -VAS 5051 A-

– Increase engine speed to 3050 … 3150 rpm and maintain at this level until displays in zones -3- and -4- have settled.
– Compare display in zones -3- and -4-.
• Specification: Difference between the two display zones max. 100 mg/stroke

If reading does not match specification:

– Check vane adjustment at both turbochargers ⇒ page 219 .

Continue testing as follows:

– Touch ↵ key.

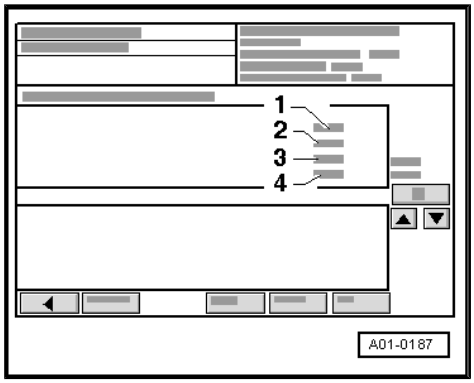

Display on -VAS 5051 A-

– Use keypad -2- to enter “011” for “Display group 011” and confirm by touching Q key.

1 - Enter display group

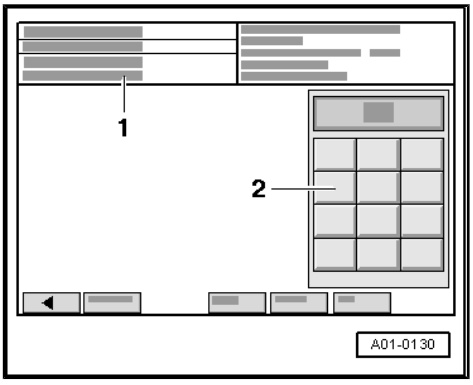

Display on -VAS 5051 A-

– Increase engine speed to 3050 … 3150 rpm and maintain at this level until displays in zones -2- and -3- have settled.

– Compare display in zones -2- and -3-.

• Specification: Difference between the two display zones max. 50 mbar

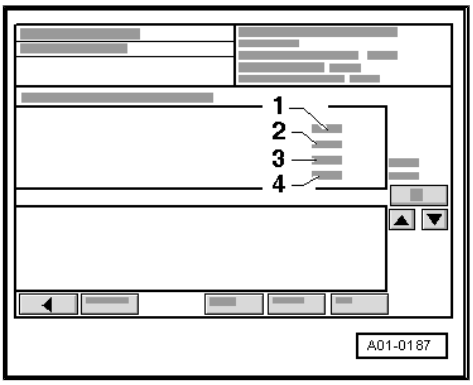

Note

At altitudes above 1000 m, the difference between the two display zones may increase by 100 mbar for each further 1000 metres of altitude.

– Terminate function “08 - Reading measured value block” by touching ← key.

If reading does not match specification:

– Check charge pressure ⇒ page 231 .

Checking vane adjustment at both turbochargers

– On vehicles with auxiliary heater, screw out bolts -arrows- for attaching exhaust pipe of auxiliary/supplementary heater to noise insulation.

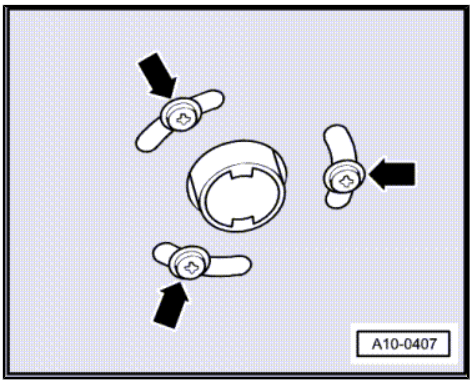

– Unfasten quick-release fasteners -1- and -2- and detach front and rear noise insulation.

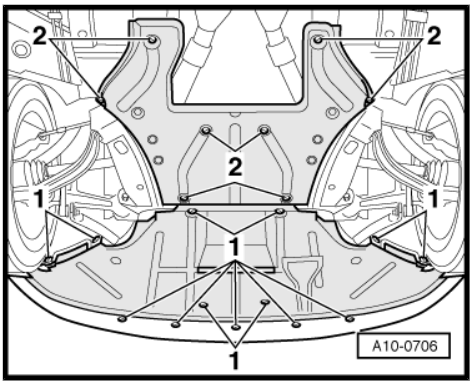

Protected by copyright. Copying for private or commercial purposes, in part or in whole, is not permitted unless authorised by AUDI AG. AUDI AG does not guarantee or accept any liability with respect to the correctness of information in this document. Copyright by AUDI AG.

Display on -VAS 5051 A-

– From list -1- select function “04 - Basic setting”.

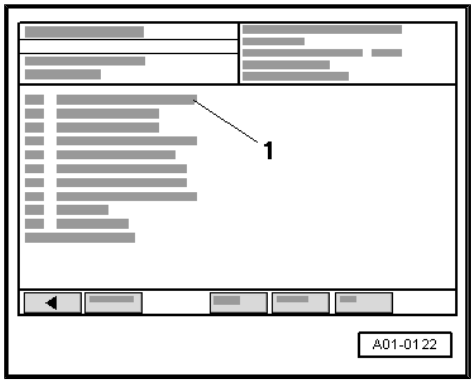

Display on -VAS 5051 A-

– Use keypad -2- to enter “033” for “Display group 033” and confirm by touching Q key.

1 - Enter display group

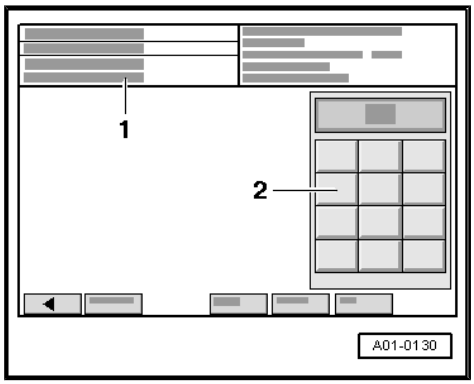

Display on -VAS 5051 A-

– Activate basic setting by touching key A.

• Idling speed is increased to 1450 rpm.

• Vacuum units for charge pressure control are actuated alternately.

– Check display in zones -2-, -3- and -4-.

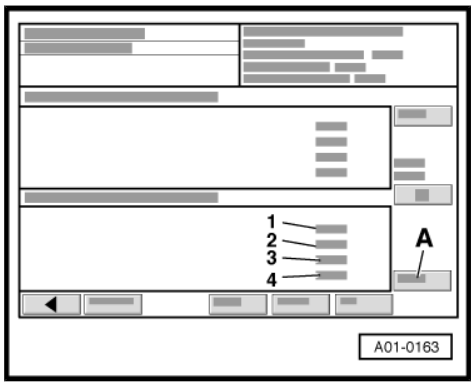

Display zones		Explanatory notes
2	…	Activated cylinder bank, alternating • Bank 1 on • Bank 2 on
3	… mg/S [15]	Intake air mass, right cylinder bank (bank 1), alternating • Specification with “Bank 1 on”: 550 … 850 mg/S • Specification with “Bank 2 on”: 100 … 300 mg/S
4	… mg/S [15]	Intake air mass, left cylinder bank (bank 2), alternating • Specification with “Bank 2 on”: 550 … 850 mg/S • Specification with “Bank 1 on”: 100 … 300 mg/S The values for the left and right side must be roughly equal

15) mg/S = Milligrammes/stroke

Protected by copyright. Copying for private or commercial purposes, in part or in whole, is not permitted unless authorised by AUDI AG. AUDI AG does not guarantee or accept any liability with respect to the correctness of information in this document. Copyright by AUDI AG.

– Also check whether operating rods move alternately at both turbochargers -arrows-.

– Terminate function “04 - Basic setting” by touching ← key.

Move operating rods at both turbochargers:

– Check air mass meters ⇒ Rep. Gr. 23 .

If operating rods do not move at one or both turbochargers:

– Check linkage and vacuum units for charge pressure control ⇒ page 221 .

– Check vacuum actuation for left and right turbochargers ⇒ page 222 .

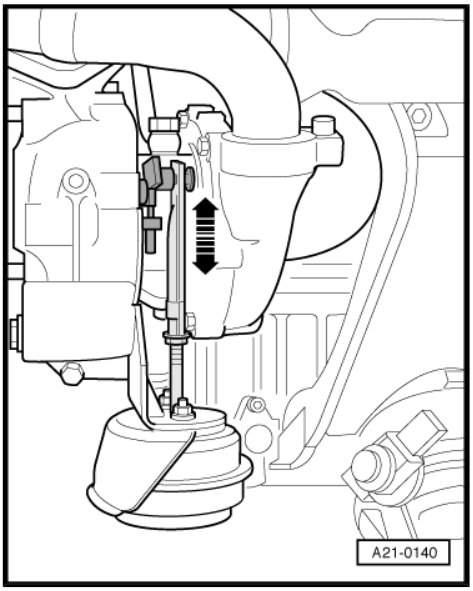

Checking linkage and vacuum unit for charge pressure control at turbochargers

A fault at the linkage or vacuum unit for charge pressure control results in the following problems:

1 - Non-attainment of charge pressure specifications

2 - Loss of power

3 - Uneven power output in part load range

4 - Jolting on range transition

• Vacuum hoses checked for leaks and all hoses fitted ⇒ page 225

– Switch off ignition.

– Switch on turbocharger tester -V.A.G 1397 A- and set measuring range switch to -I- (absolute pressure).

– Attach measurement hose to connection -I-.

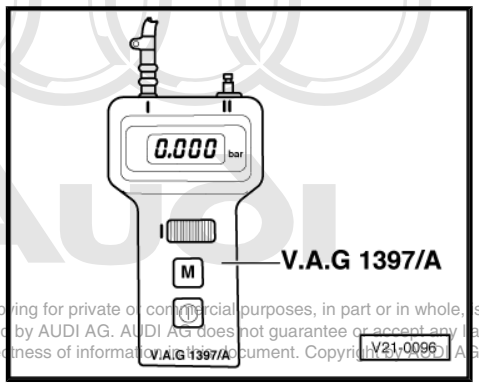

Protected by copyright. Copying for private or commercial purposes, in part or in whole, is not permitted unless authorised by AUDI AG. AUDI AG does not guarantee or accept any liability with respect to the correctness of information in this document. Copyright by AUDI AG.

– Disconnect hose -arrow- at vacuum unit for charge pressure control.

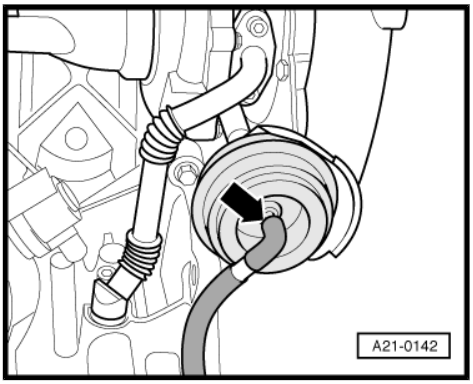

– Use test hoses to connect vacuum hand pump -V.A.G 1390- and turbocharger tester -V.A.G 1397 A- as shown.

– Use vacuum hand pump to generate vacuum.

– Take vacuum reading on turbocharger tester -V.A.G 1397 A- .

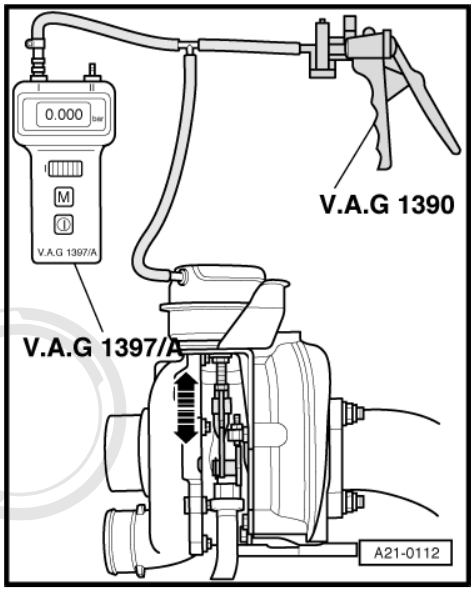

– In doing so, observe turbocharger linkage:

• Specification at 100 … 200 mbar: Linkage must start to move upwards

• Specification at 590 … 650 mbar: Linkage must make contact with upper stop

Protected by copyright. Copying for private or commercial purposes, in part or in whole, is not permitted unless authorised by AUDI AG. AUDI AG does not guarantee or accept any liability with respect to the correctness of information in this document. Copyright by AUDI AG.

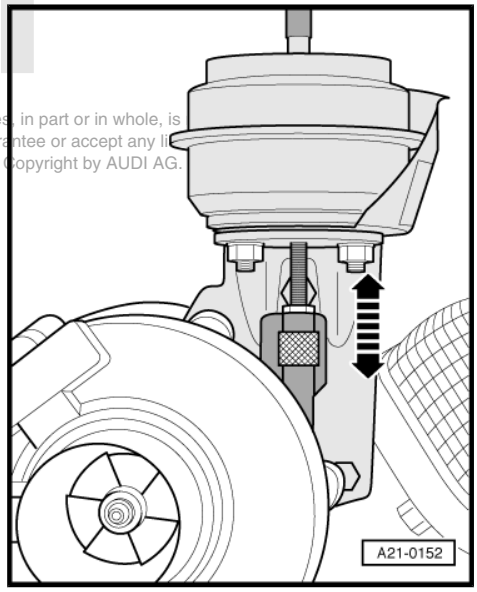

Note

The absolute pressure displayed on the turbocharger tester -V.A.G 1397 A- must decrease by the specified values stated.

– Vent the vacuum hand pump.

• The linkage must move downwards.

Note

Check movement of linkage over entire adjustment range: It must move constantly and smoothly

– Repeat test if necessary at second turbocharger.

If readings do not match specifications or linkage does not move smoothly:

– Replace turbocharger.

Checking vacuum actuation for turbochargers

• Vehicle diagnostic, testing and information system -VAS 5051 A- with diagnostic wire -VAS 5051/1- connected, vehicle self-diagnosis and vehicle system “01 - Engine electronics” selected; the engine must be idling when doing so

– Disconnect hose -arrow- at vacuum unit for charge pressure control.

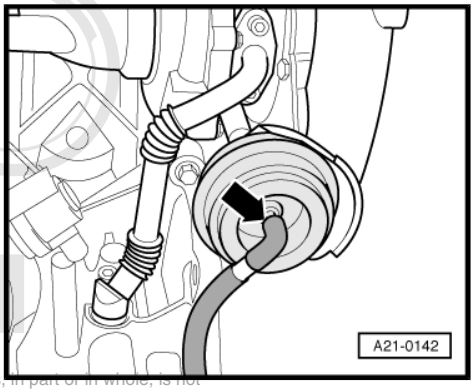

Protected by copyright. Copying for private or commercial purposes, in part or in whole, is not permitted unless authorised by AUDI AG. AUDI AG does not guarantee or accept any liability with respect to the correctness of information in this document. Copyright by AUDI AG.

– Switch on turbocharger tester -V.A.G 1397 A- and set measuring range switch to -I- (absolute pressure).
– Attach measurement hose to connection -I-.
– Connect measurement hose to vacuum hose detached.

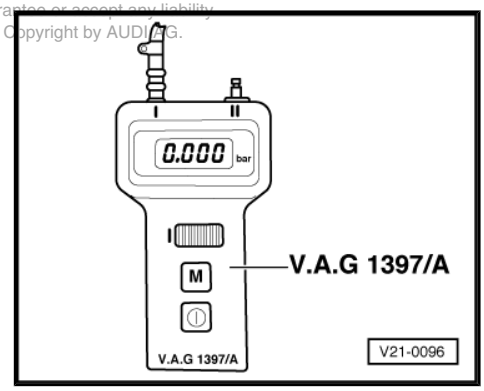

Display on -VAS 5051 A-

– From list -1- select function “04 - Basic setting”.

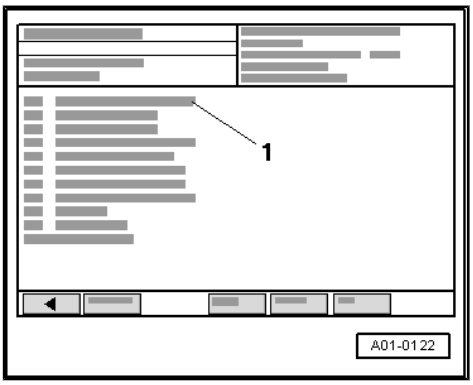

Display on -VAS 5051 A-

– Use keypad -2- to enter “033” for “Display group 033” and confirm by touching Q key.

1 - Enter display group

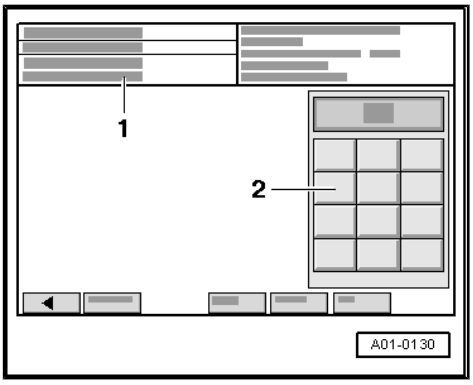

– Activate basic setting by touching key A.

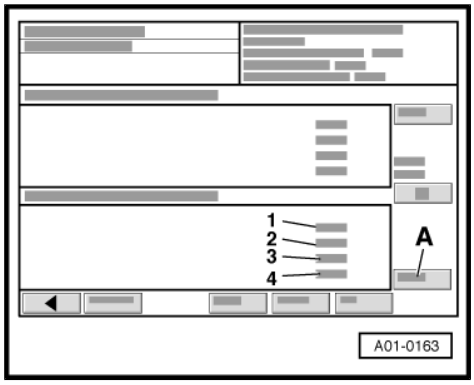

Display on -VAS 5051 A-

- Idling speed is increased to 1450 rpm.
- Vacuum units for charge pressure control are actuated alternately.

- Specification at turbocharger tester -V.A.G 1397 A- : Greater than 650 mbar vacuum on actuation of corresponding vacuum unit

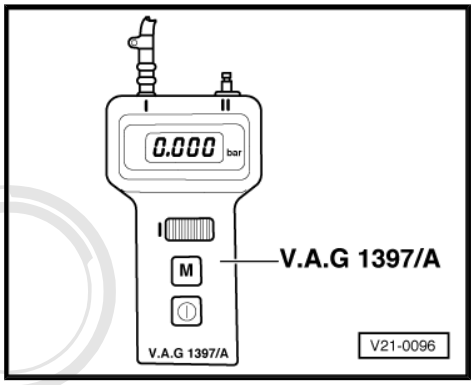

Note

The absolute pressure displayed on the turbocharger tester -V.A.G 1397 A- must decrease by the specified value stated.

– Repeat test if necessary at second turbocharger.

If reading does not match specification:

– Check whether charge pressure control hose has become disconnected or is clogged

– Check charge pressure control solenoid valve -N75- or -N274- ⇒ page 227 .

– Terminate function “04 - Basic setting” by touching ↵ key.

– Touch “06 - End output”.

– Switch off ignition.

Protected by copyright. Copying for private or commercial purposes, in part or in whole, is not permitted unless authorised by AUDI AG. AUDI AG does not guarantee or accept any liability with respect to the correctness of information in this document. Copyright by AUDI AG.

1.5 Connection diagram for charge pressure control

1 - Right turbocharger

2 - Left turbocharger

3 - To variable intake manifold flap changeover valve -N239-

4 - To exhaust gas recirculation valve -N18- and exhaust gas recirculation valve 2 -N213-

5 - Vacuum pump

6 - Brake servo

7 - Vacuum reservoir

- ❑ Fitting location: In front left wheel housing beneath liner

8 - Non-return valve

- ❑ Installation position (light/dark side): As shown

9 - Charge pressure control solenoid valve -N75-

10 - Charge pressure control solenoid valve 2 -N274-

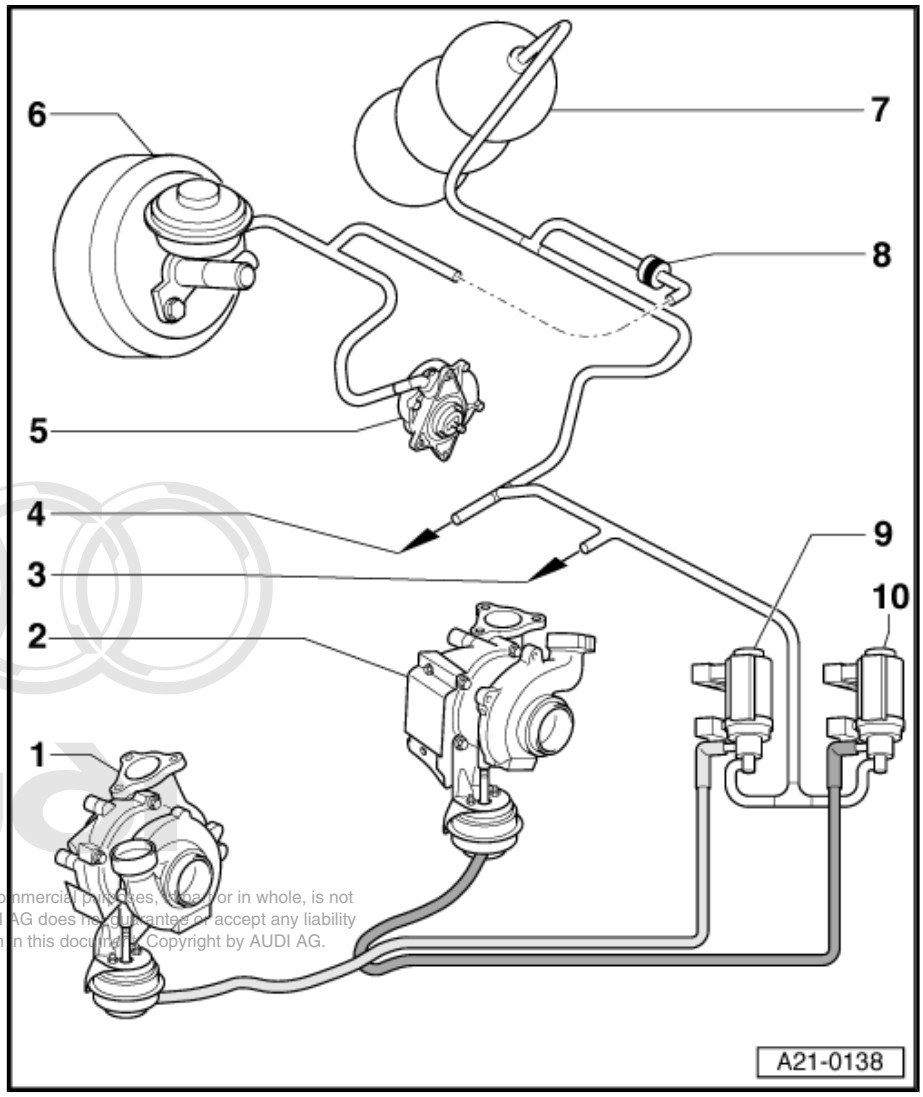

Protected by copyright. Copying for private or commercial purposes, in part or in whole, is not permitted unless authorised by AUDI AG. AUDI AG does not guarantee or accept any liability with respect to the correctness of information in this document. Copyright by AUDI AG.

1.6 Exploded view of charge pressure control solenoid valves -N75- and -N274-

Note

Installation position: At holder for air conditioner compressor and hydraulic pump

1 - To vacuum pump

2 - Charge pressure control solenoid valve 2 -N274-

- ❑ Left cylinder bank:

3 - 5 Nm

4 - Holder

5 - Rubber mount

6 - Charge pressure control solenoid valve -N75-

- ❑ Right cylinder bank:

7 - To right turbocharger

8 - To left turbocharger

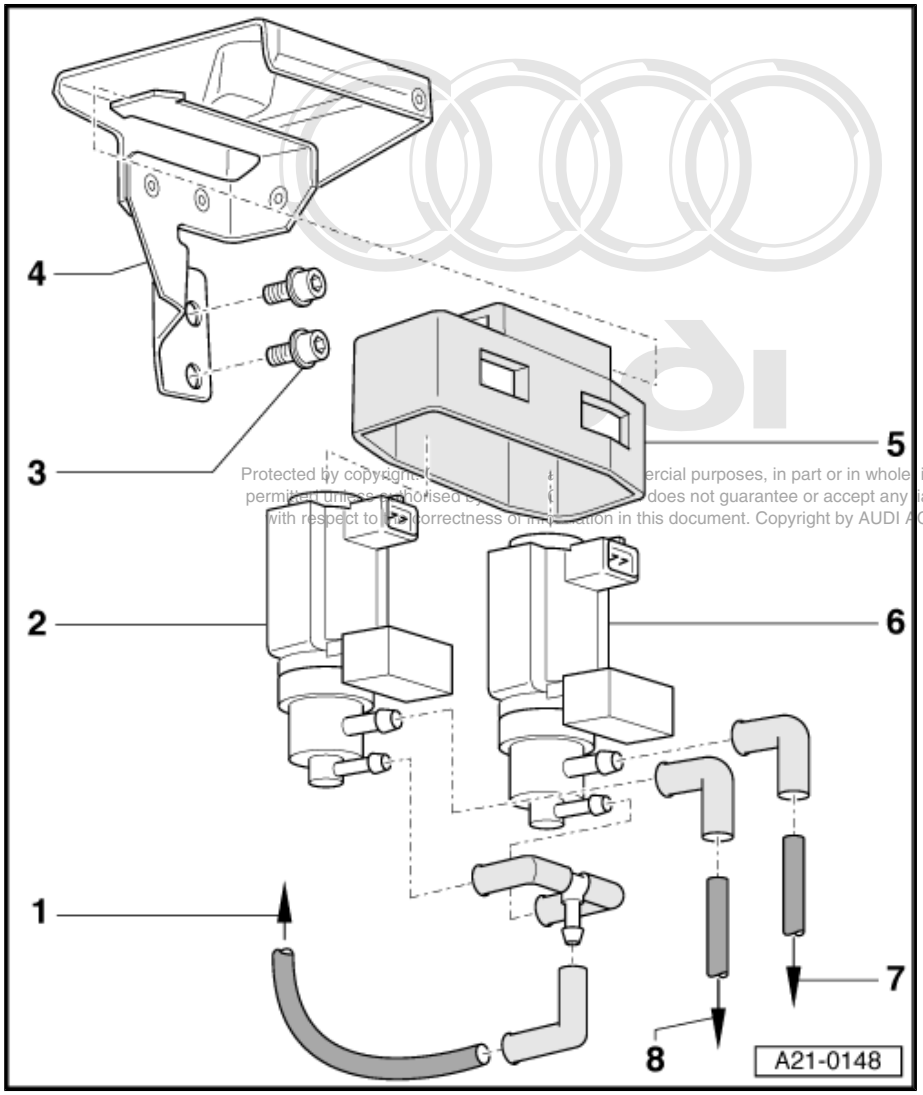

Protected by copyright. Copying for commercial purposes, in part or in whole, is not permitted unless authorised by AUDI AG. AUDI AG does not guarantee or accept any liability with respect to the correctness of information in this document. Copyright by AUDI AG.

1.7 Checking charge pressure control solenoid valves -N75- and -N274-

Special tools and workshop equipment required

- Portable multimeter -V.A.G 1526 B- or -V.A.G 1526 A-
- Adapter set -V.A.G 1594 C- or -V.A.G 1594 B-
- Test box -V.A.G 1598/30-
- Vehicle diagnostic, testing and information system -VAS 5051 A- with diagnostic wire -VAS 5051/1-

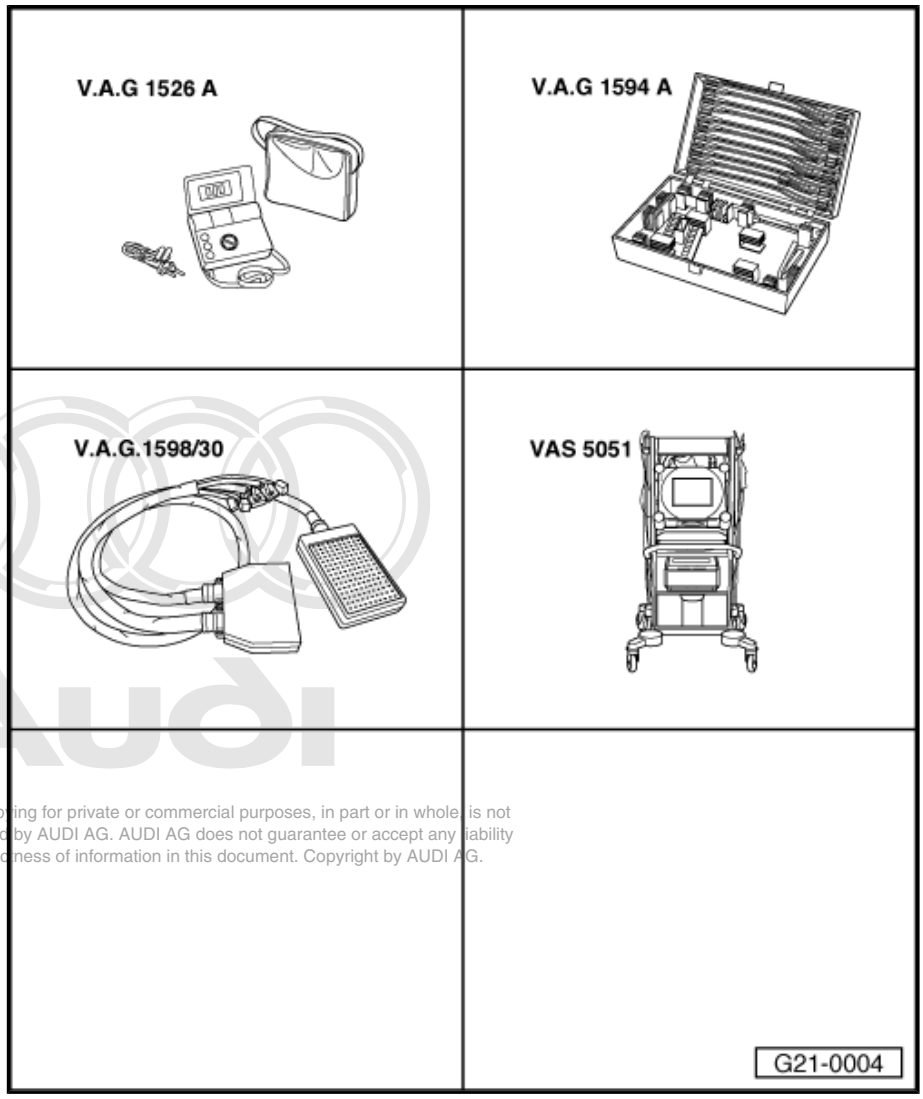

Protected by copyright. Copying for private or commercial purposes, in part or in whole, is not permitted unless authorised by AUDI AG. AUDI AG does not guarantee or accept any liability with respect to the correctness of information in this document. Copyright by AUDI AG.

Note

The charge pressure control solenoid valves -N75- and -N274- and the corresponding wiring are monitored by the engine control unit.

Checking mechanical function

– Remove charge pressure control solenoid valves at left engine support.

– Attach test hose to connection -2- of solenoid valve.

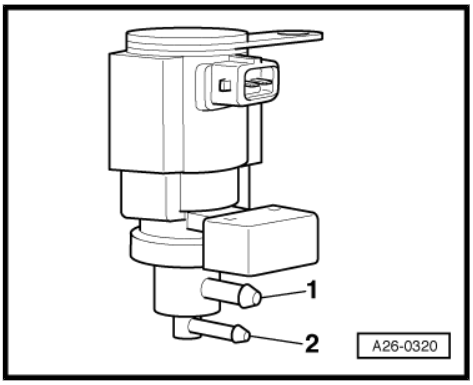

Note

Valve must be in installation position.

– Use test lead from adapter set to connect contact -2- of solenoid valve to battery positive.
– Connect contact -1- to earth.
• Valve must click.
• Intake must be possible at test hose.

If valve does not open:

– Replace charge pressure control solenoid valve.

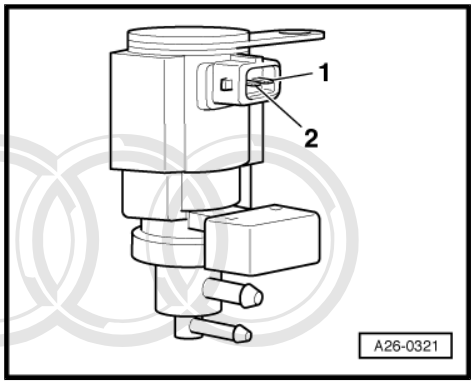

– Detach connection between contact -1- and earth.
• Intake must no longer be possible at test hose.

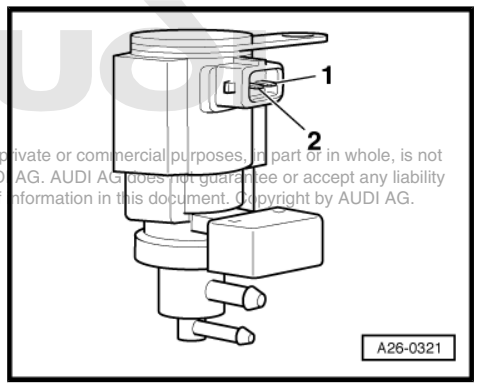

Protected by copyright. Copying for private or commercial purposes, in part or in whole, is not permitted unless authorised by AUDI AG. AUDI AG does not guarantee or accept any liability with respect to the correctness of information in this document. Copyright by AUDI AG.

Checking power supply

• Fuse for solenoid valves OK
– Connect up multimeter (voltage measuring range) between contact -2- and battery positive.
– Switch on ignition.
• Specification: approx. battery voltage

If reading does not match specification:

– Use current flow diagram to check wiring.

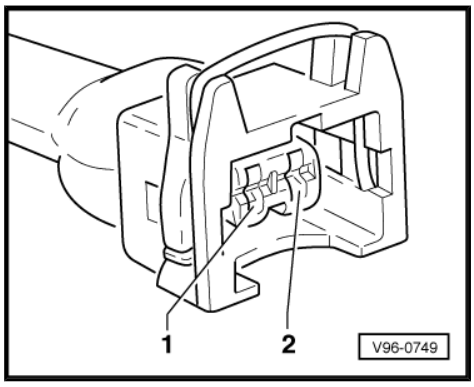

Checking internal resistance

– Connect multimeter (resistance measuring range) to valve.
• Specification: 14 … 20 Ω

If reading does not match specification:

– Replace charge pressure control solenoid valve.

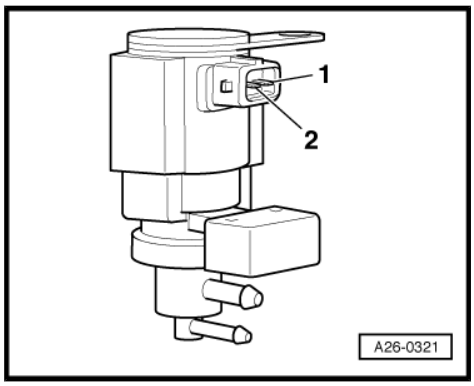

Checking signal wire

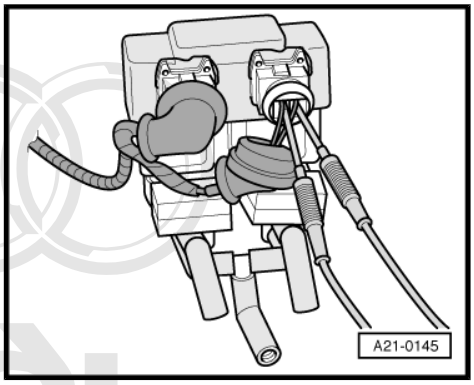

- Vehicle diagnostic, testing and information system - VAS 5051 A- with diagnostic wire -VAS 5051/1- connected, vehicle self-diagnosis and vehicle system “01 - Engine electronics” selected; when doing this, the ignition must be switched on

– Plug in connector at solenoid valve removed.

– Push back rubber grommet of connector.

– Connect up multimeter (voltage measuring range) between contacts 1 and 2.

Display on -VAS 5051 A-

– From list -1- select function “04 - Basic setting”.

Protected by copyright. Copying for private or commercial purposes, in part or in whole, is not permitted unless authorised by AUDI AG. AUDI AG does not guarantee or accept any liability with respect to the correctness of information in this document. Copyright by AUDI AG.

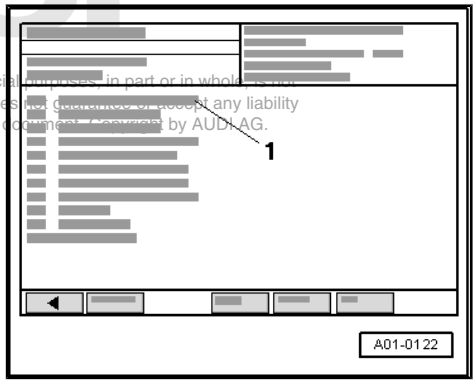

Display on -VAS 5051 A-

– Use keypad -2- to enter “033” for “Display group 033” and confirm by touching 0 key.

1 - Enter display group

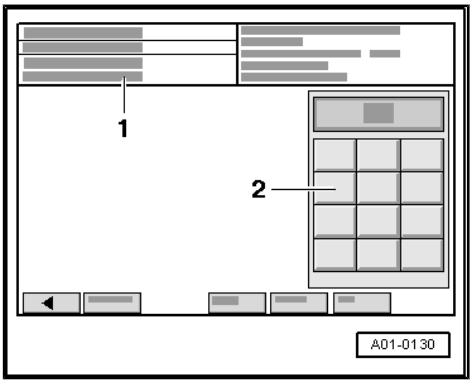

Display on -VAS 5051 A-

– Activate basic setting by touching key A.

- Specification: approx. 5.5 V or approx. 10.5 V (alternating)

– Terminate function “04 - Basic setting” by touching ← key.

– Touch “06 - End output”.

– Switch off ignition.

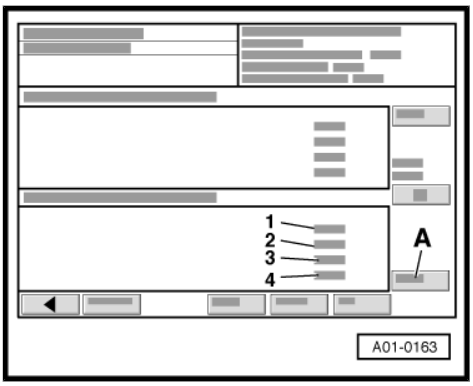

If reading does not match specification:

– Slacken off cross-head bolts -1- at electronics box in plenum chamber.

– Unclip plenum chamber cover -2- at front at bulkhead -arrows-.

– Detach plenum chamber cover.

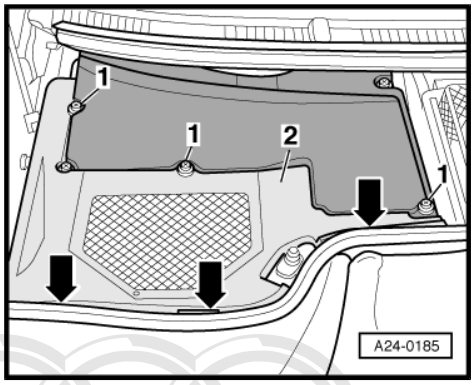

– Prise out cover -1- in scuttle panel trim and slacken off rear cross-head bolt -rear right arrow-.

– Slacken off the remaining cross-head bolts -arrows-.

– Detach cover for electronics box in plenum chamber.

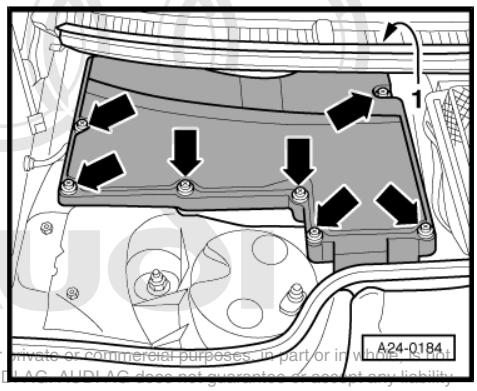

Protected by copyright. Copying for private or commercial purposes, in part or in whole, is not permitted unless authorised by AUDI AG. AUDI AG does not guarantee or accept any liability with respect to the correctness of information in this document. Copyright by AUDI AG.

– Screw out bolt -arrow-.

– Disengage retainer.

– Detach diesel direct injection system control unit -J248- -Item 1-. Release and unplug connectors.

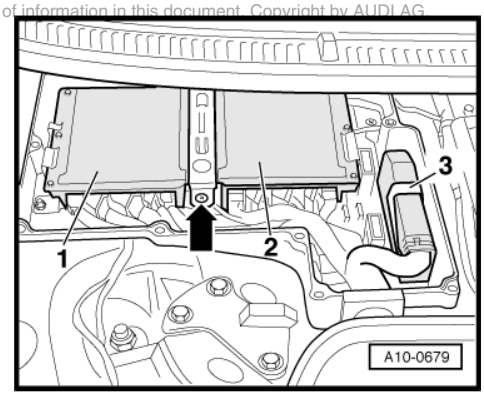

– With ignition switched off, connect test box -V.A.G 1598/30- to connectors of diesel direct injection system control unit -J248- only (not to actual control unit).

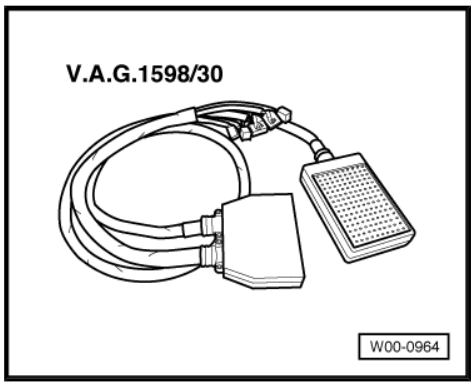

– Check for open circuit and short to earth or positive in the following wiring:

Component	Connector Contact	Test box - V.A.G 1598/30- Socket
Charge pressure control solenoid valve -N75-	-1-	2/21
Charge pressure control solenoid valve 2 -N274-	-1-	2/19

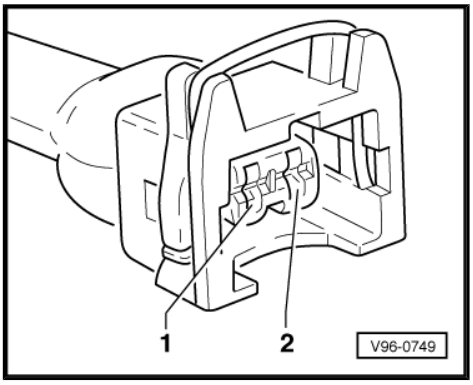

– Repair wiring if necessary.

If no fault is found in wire:

– Replace engine control unit.

1.8 Checking charge pressure of turbochargers

Special tools and workshop equipment required

- Adapter -V.A.G 1318/11-
- Turbocharger tester -V.A.G 1397 A-
- Vehicle diagnostic, testing and information system - VAS 5051 A- with diagnostic wire -VAS 5051/1-

Test condition

- Vehicle diagnostic, testing and information system - VAS 5051 A- with diagnostic wire -VAS 5051/1- connected, vehicle self-diagnosis and vehicle system “01 - Engine electronics” selected; the engine must be idling when doing so

Test sequence

– Screw out rear left screw plug at intake manifold and screw in adapter -V.A.G 1318/11- .

– Connect turbocharger tester -V.A.G 1397 A- using test hose -1-.

– Guide measurement hose over rear edge of bonnet and through right window opening into passenger compartment.

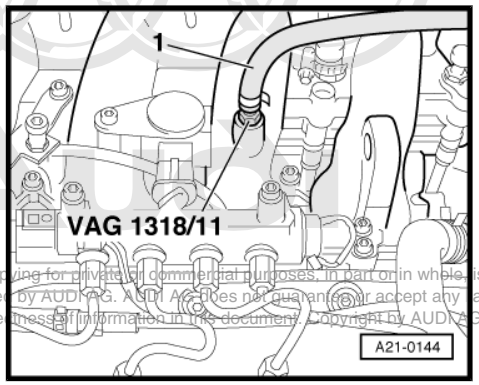

Protected by copyright. Copying for private or commercial purposes, in part or in whole, is not permitted unless authorised by AUDI AG. AUDI AG does not guarantee or accept any liability with respect to the correctness of information in this document. Copyright by AUDI AG.

– Switch on turbocharger tester and set measuring range switch to -I- (absolute pressure).

– Attach measurement hose to connection -I-.

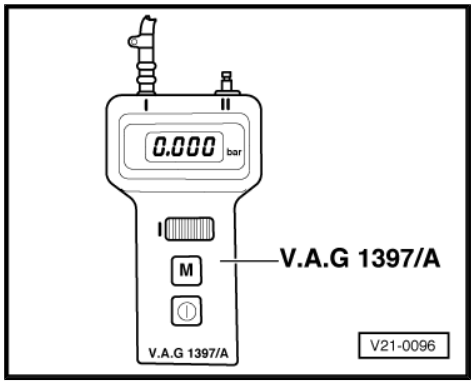

Note

- *Hose connections must be absolutely free from leaks to prevent possible measurement errors.*
- *Take care not to trap measurement hose at bonnet and side window.*
- *Pressing memory button M on turbocharger tester causes last measured value to be stored until memory button M is pressed again or tester is switched off.*
- *Storage is indicated by flashing of the decimal point in the display zone.*
- *An arrow appears in the top left corner of the display if the battery voltage of the turbocharger tester drops below the permissible specification.*
- *Before checking, drive vehicle at least 3 km at steady speed (without stopping at traffic lights etc.).*

WARNING

A second person is required, as the display values are read out whilst driving. Heed notes on safety ***⇒ page 215*** ***.***

Display on -VAS 5051 A-

– From list -1-, select function “08 - Reading measured value block”.

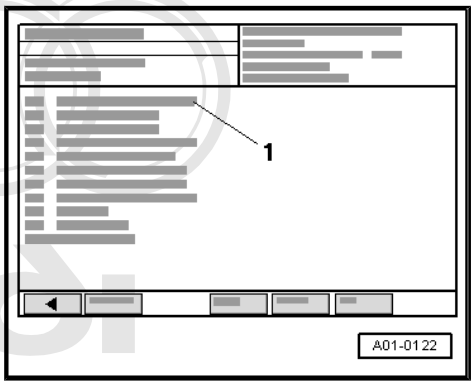

Protected by copyright. Copying for private or commercial purposes, in part or in whole, is not permitted unless authorised by AUDI AG. AUDI AG does not guarantee or accept any liability with respect to the correctness of information in this document. Copyright by AUDI AG.

Display on -VAS 5051 A-

– Use keypad -2- to enter “011” for “Display group 011” and confirm by touching Q key.

1 - Enter display group

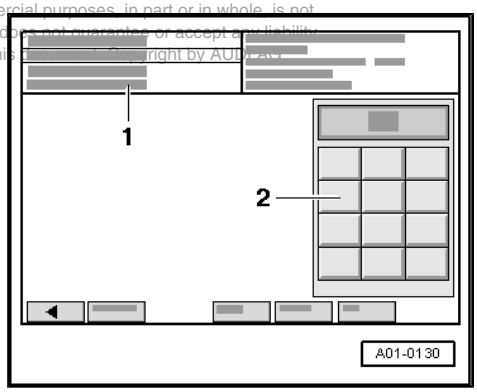

Display on -VAS 5051 A-

– Drive at approx. 60 km/h and switch to “Tiptronic - gear 3”.
– Accelerate vehicle in 3rd gear at full throttle (without kick-down) and in doing so observe engine speed.
– At approx. 3000 rpm, press key panel “Print - store result” on -VAS 5051 A- and at the same time press memory button M on turbocharger tester -V.A.G 1397 A- .

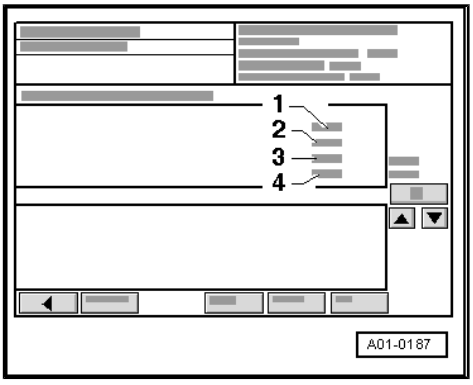

Specification on -VAS 5051 A-

- 2050 … 2400 mbar

Specification on -V.A.G 1397 A-

- 2.050 … 2.400 bar

Note

The charge pressure level should be determined using the turbocharger tester -V.A.G 1397 A- . The vehicle diagnostic, testing and information system -VAS 5051 A- serves to check whether the charge pressure is also being recorded in the control unit.

– Terminate function “08 - Reading measured value block” by touching ← key.
– Touch “06 - End output”.
– Switch off ignition.

If charge pressure is not in specified range:

– Check linkage and vacuum units for charge pressure control ⇒ page 221 .
– Check charge pressure control solenoid valves -N75- and -N274- ⇒ page 227 .

If both valves are OK but charge pressure is too low:

– Replace turbocharger.

1.9 Checking intake manifold pressure sender -G71-

Special tools and workshop equipment required

- Adapter -V.A.G 1318/11-
- Turbocharger tester -V.A.G 1397 A-
- Vehicle diagnostic, testing and information system -VAS 5051 A- with diagnostic wire -VAS 5051/1-

Protected by copyright. Copying for private or commercial purposes, in part or in whole, is not permitted unless authorised by AUDI AG. AUDI AG does not guarantee or accept any liability with respect to the correctness of information in this document. Copyright by AUDI AG.

Note

- *The intake manifold pressure sender -G71- and the corresponding wiring are monitored by the engine control unit.*
- *Fitting location of intake manifold pressure sender -G71- -arrow-: Front right of intake manifold*

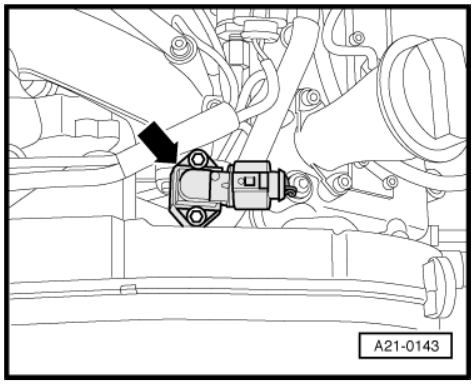

Test condition

- Vehicle diagnostic, testing and information system - VAS 5051 A- with diagnostic wire -VAS 5051/1- connected, vehicle self-diagnosis and vehicle system “01 - Engine electronics” selected; the engine must be idling when doing so

Test sequence

– Screw out rear left screw plug at intake manifold and screw in adapter set -V.A.G 1318/11- .

– Connect turbocharger tester -V.A.G 1397 A- using test hose -1-.

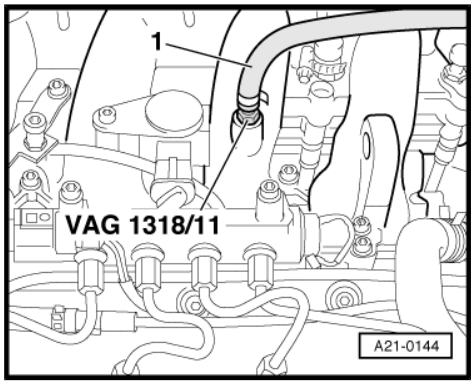

– Switch on turbocharger tester -V.A.G 1397 A- and set measuring range switch to -I- (absolute pressure).

– Attach measurement hose to connection -I-.

– Read off and note down display on turbocharger tester - V.A.G 1397 A- .

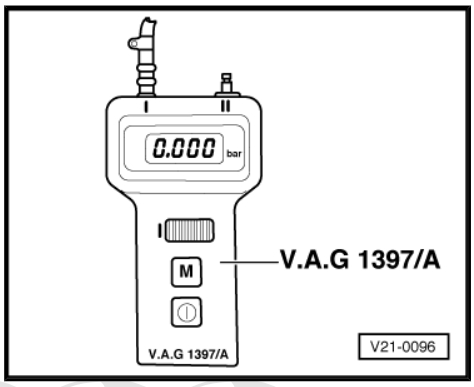

Display on -VAS 5051 A-

– From list -1-, select function “08 - Reading measured value block”.

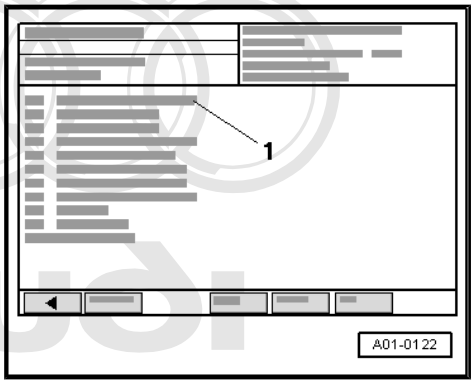

Protected by copyright. Copying for private or commercial purposes, in part or in whole, is not permitted unless authorised by AUDI AG. AUDI AG does not guarantee or accept any liability with respect to the correctness of information in this document. Copyright by AUDI AG.

Display on -VAS 5051 A-

– Use keypad -2- to enter “033” for “Display group 033” and confirm by touching Q key.

1 - Enter display group

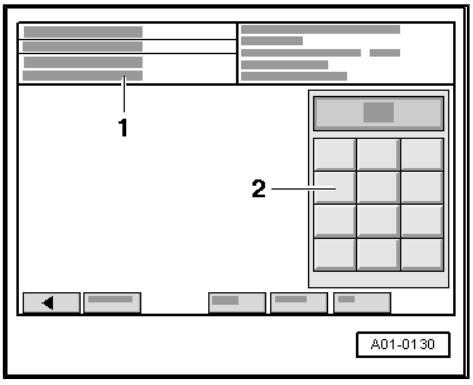

Display on -VAS 5051 A-

– Check display in zone -2-.

• Specification: Equal pressures on both measuring instruments, tolerance ± 100 mbar

– Repeat test at different speeds.

– Terminate function “08 - Reading measured value block” by touching ← key.

– Touch “06 - End output”.

– Switch off ignition.

If reading does not match specification:

– Check wiring.

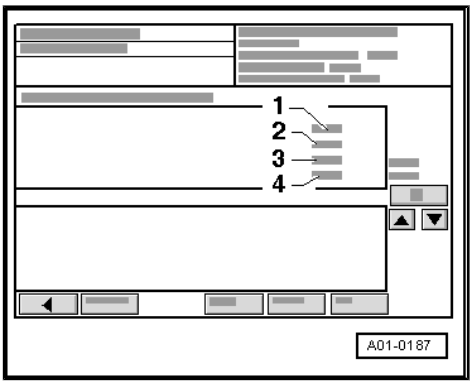

Checking wiring

– Slacken off cross-head bolts -1- at electronics box in plenum chamber.

– Unclip plenum chamber cover -2- at front at bulkhead -arrows-.

– Detach plenum chamber cover.

Reproduction of this document for private or commercial purposes, in part or in whole, is not permitted unless authorised by AUDI AG. AUDI AG does not guarantee or accept any liability with respect to the correctness of information in this document. Copyright by AUDI AG.

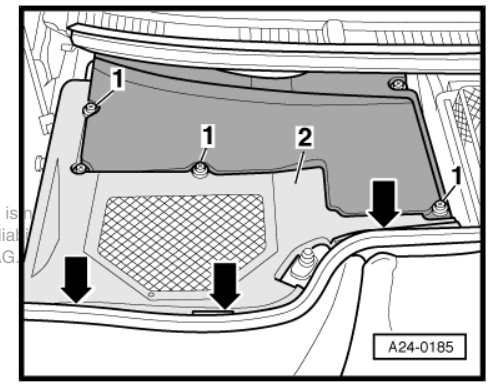

– Prise out cover -1- in scuttle panel trim and slacken off rear cross-head bolt -rear right arrow-.

– Slacken off the remaining cross-head bolts -arrows-.

– Detach cover for electronics box in plenum chamber.

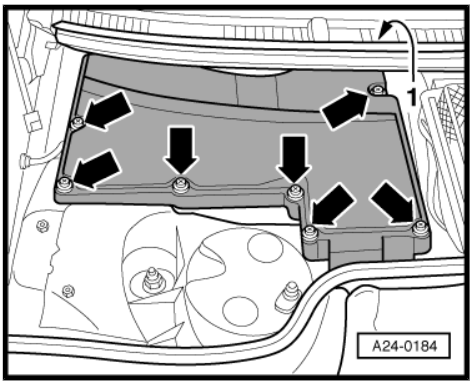

– Screw out bolt -arrow-.

– Disengage retainer.

– Detach diesel direct injection system control unit -J248- -Item 1-. Release and unplug connectors.

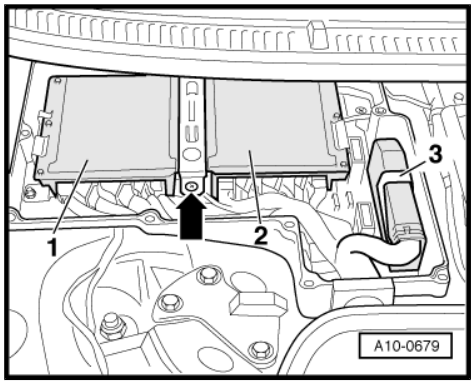

– With ignition switched off, connect test box -V.A.G 1598/30- to connectors of diesel direct injection system control unit -J248- only (not to actual control unit).

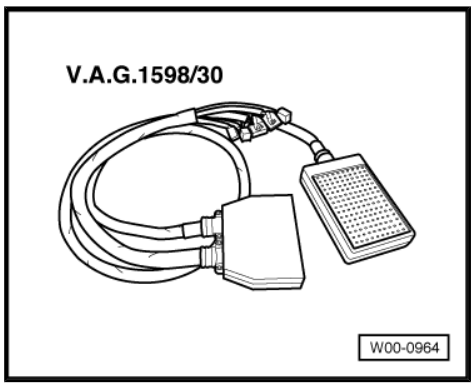

– Unplug connector at intake manifold pressure sender -arrow-.

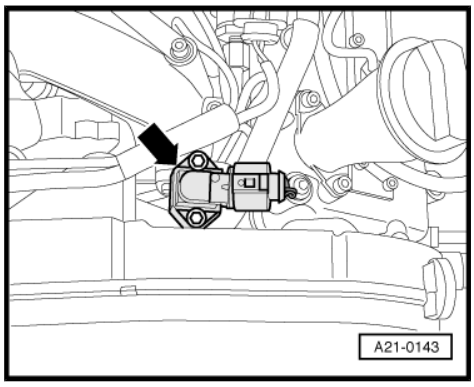

– Check for open circuit and short to earth or positive in the following wiring:

Connector Contact	Test box -V.A.G 1598/30- Socket
-1-	3/16
-3-	3/14
-4-	3/15

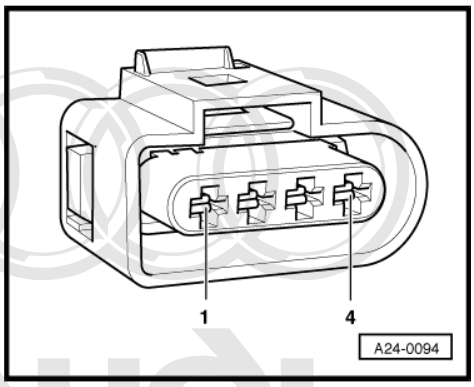

– Repair wiring if necessary.

If no fault is found:

– Replace intake manifold pressure sender.

Protected by copyright. Copying for private or commercial purposes, in part or in whole, is not permitted unless authorised by AUDI AG. AUDI AG does not guarantee or accept any liability with respect to the correctness of information in this document. Copyright by AUDI AG.

2 Servicing charge air system with turbocharger

2.1 Rules for cleanliness

Pay careful attention to the following “rules for cleanliness” when working on the turbocharger:

- Thoroughly clean joints and surrounding areas prior to disconnection.
- Place parts removed on a clean surface and cover over. Only use lint-free cloths.
- Carefully cover over or seal open components if repair work is not to be performed immediately.
- Only install clean components: Leave replacement parts in their wrapping until immediately prior to installation. Never use parts which have been stored loose (e.g. in tool chests etc.).
- When the system is open: Do not work with compressed air if this can be avoided. Do not move the vehicle unless absolutely necessary.

Protected by copyright. Copying for private or commercial purposes, in part or in whole, is not permitted unless authorised by AUDI AG. AUDI AG does not guarantee or accept any liability with respect to the correctness of information in this document. Copyright by AUDI AG.

2.2 Exploded view of turbocharger

Note

The illustration shows the left turbocharger.

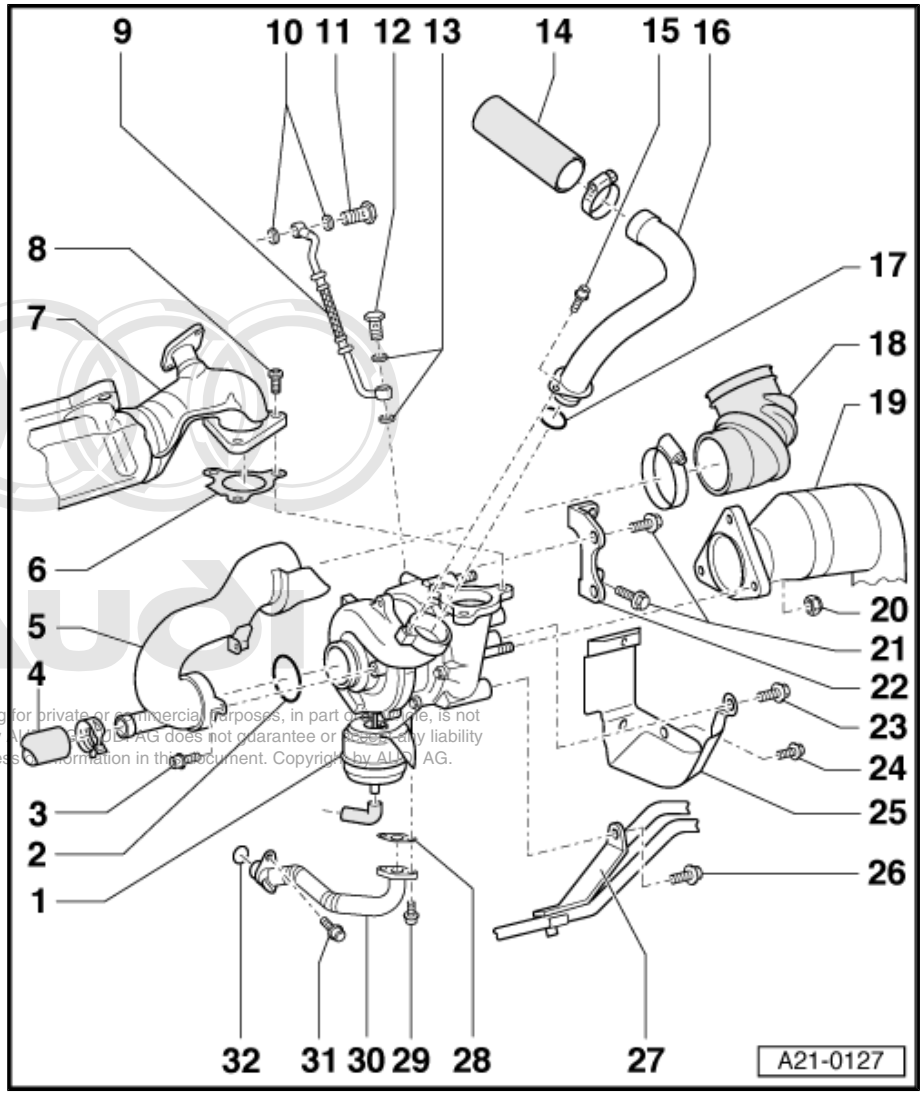

1 - Turbocharger
- ❑ Checking ⇒ page 215
- ❑ Removing and installing left turbocharger ⇒ page 239
- ❑ Removing and installing right turbocharger ⇒ page 243

2 - O-ring
- ❑ Replace

3 - 10 Nm

4 - Hose
- ❑ To crankcase breather

5 - Air pipe
- ❑ Left side of engine: With connection for crank-case breather

6 - Gasket
- ❑ Replace

7 - Exhaust manifold
- ❑ Removing and installing left exhaust manifold ⇒ page 266
- ❑ Removing and installing right exhaust manifold ⇒ page 267

8 - 20 Nm + further 90° (1/4) turn
- ❑ Replace

9 - Oil supply pipe
- ❑ From cylinder block

10 - Oil seals
- ❑ Replace

11 - 15 Nm

12 - 15 Nm

13 - Oil seals
- ❑ Replace

14 - Hose
- ❑ Pressure side

Copyright. Copying for private or commercial purposes, in part or entirety, is not permitted unless authorised by AUDI AG. AUDI AG does not guarantee or assume any liability with regard to the accuracy of information in this document. Copyright by AUDI AG.

15 - 10 Nm

16 - Air pipe

17 - O-ring

- ❑ Replace

18 - Air hose

- ❑ Intake side

19 - Front exhaust pipe

- ❑ With starter catalytic converter
- ❑ Removing and installing left front exhaust pipe ⇒ page 252
- ❑ Removing and installing right front exhaust pipe ⇒ page 259

20 - 25 Nm

- ❑ Replace

21 - 22 Nm

22 - Holder

23 - 22 Nm

24 - 10 Nm

25 - Heat shield

26 - 22 Nm

27 - ATF pipes

- ❑ Heed rules for cleanliness when working on automatic gearbox ⇒ Automatic gearbox 01L, four-wheel drive; Rep. Gr. 37

28 - Gasket

- ❑ Replace

29 - 10 Nm

30 - Oil return pipe

- ❑ To cylinder block

31 - 10 Nm

32 - O-ring

- ❑ Replace

2.3 Removing and installing left turbocharger

Removing

- Engine removed ⇒ page 4

– Unscrew front exhaust pipe from left turbocharger -nuts 1 … 3-.

– Detach front exhaust pipe.

Copyright by AUDI AG. Reproduction for private or commercial purposes, in part or in whole, is not permitted unless authorised by AUDI AG. AUDI AG does not guarantee or accept any liability with respect to the correctness of information in this document. Copyright by AUDI AG.

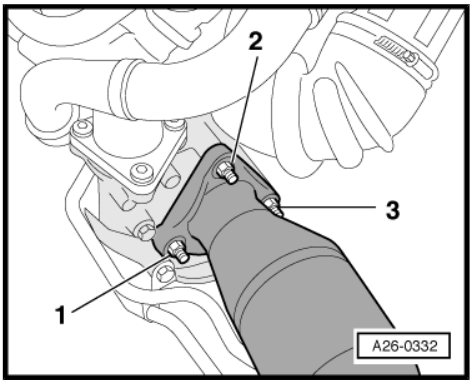

– Remove left air pipe with connecting hose -left arrows-.

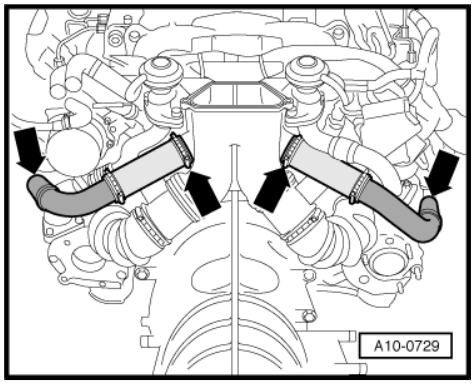

– Pull up retaining clip -4- approx. 10 mm.
– Unfasten hose clamp -1-.
– Detach air hose to turbocharger with air mass meter.
– Unplug connector -2-.
– Pull rear air pipe -3- upwards and swivel aside slightly.

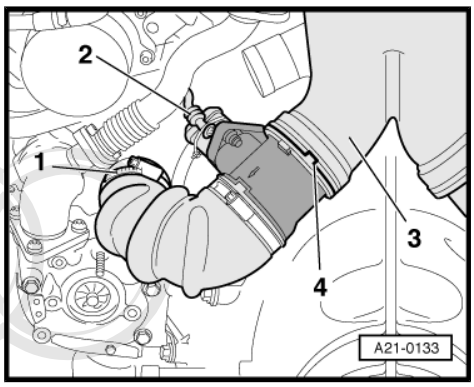

– Detach oil pipe at cylinder block -arrow-.

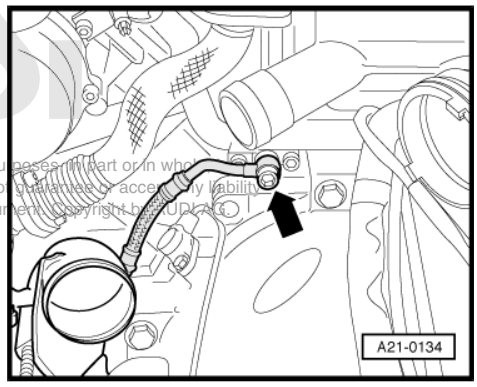

Protected by copyright. Copying for private or commercial purposes, in part or in whole, is not permitted unless authorised by AUDI AG. AUDI AG does not guarantee or accept any liability with respect to the correctness of information in this document. Copyright by AUDI AG.

– Screw out bolts -arrows- and detach ATF pipes from gearbox.

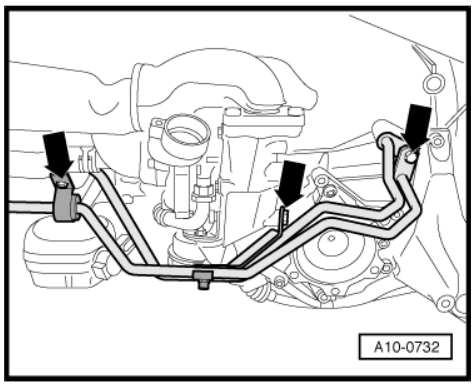

Note

Heed rules for cleanliness when working on automatic gearbox
⇒ Automatic gearbox 01L, four-wheel drive; Rep. Gr. 37 .

– Screw out bolts -1 … 4- of turbocharger holder.

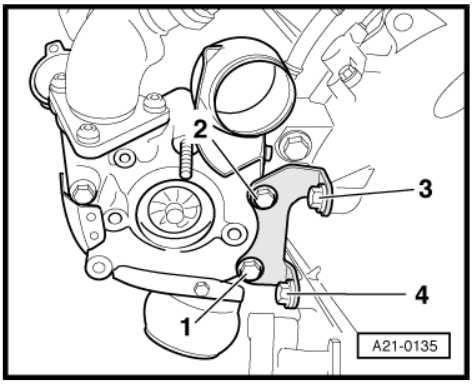

– Detach vacuum hose -3-.
– Screw out bolt -2-.
– Detach crankcase breather hose -1-.

Protected by copyright. Copying for private or commercial purposes, in part or in whole, is not permitted unless authorised by AUDI AG. AUDI AG does not guarantee or accept any liability with respect to the correctness of information in this document. Copyright by AUDI AG.

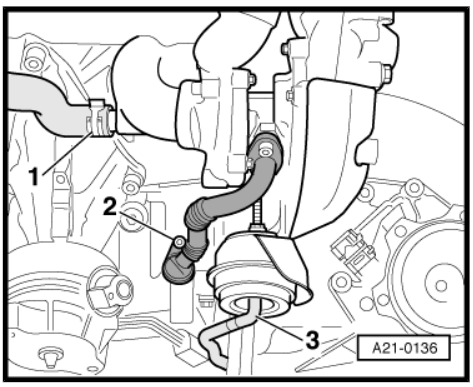

– Unscrew turbocharger from exhaust manifold -arrows-.

– Detach turbocharger and in doing so pull out oil return pipe from top part of sump.

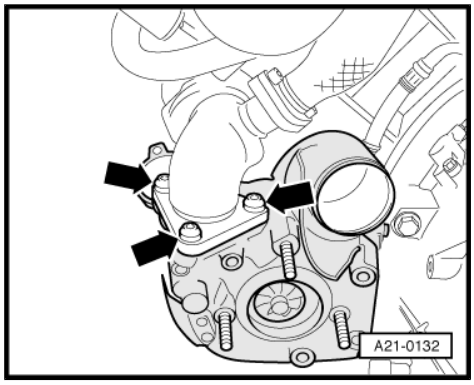

Note

Seal off oil bore in top part of sump with clean cloths.

Installing

Install in reverse order; paying attention to the following:

Note

- *Replace gaskets, seals and self-locking nuts.*
- *Hose connections and hoses must be free of oil and grease before fitting.*
- *Secure all hose connections with standard clamps ⇒ Parts catalogue .*
- *There must not be any leaks in the charge air system.*
- *Fill turbocharger with engine oil at oil supply pipe connection.*
- *After installing turbocharger, allow engine to idle for approx. 1 minute and do not rev up immediately so as to ensure that turbocharger is supplied with oil.*

– Attach ATF pipes ⇒ Automatic gearbox 01L, four-wheel drive; Rep. Gr. 37 .

– Install engine ⇒ page 26 .

– Check oil level ⇒ page 161 .

Tightening torques

Component	Nm
Turbocharger to exhaust manifold	20 + 90° 16) 17)
Oil return pipe to top part of sump	10
Turbocharger holder	22
Oil supply pipe to cylinder block	15
Air pipe to turbocharger	10
Front exhaust pipe with catalytic converter to turbocharger	25
Clamps for air hoses	3,5

16) 90° corresponds to a quarter turn.

17) Replace bolts.

Protected by copyright. Copying for private or commercial purposes, in part or in whole, is not permitted unless authorised by AUDI AG. AUDI AG does not guarantee or accept any liability with respect to the correctness of information in this document. Copyright by AUDI AG.

2.4 Removing and installing right turbocharger

Removing

- Engine removed ⇒ page 4

– Unscrew front exhaust pipe from right turbocharger -nuts 1 … 3-.

– Detach front exhaust pipe.

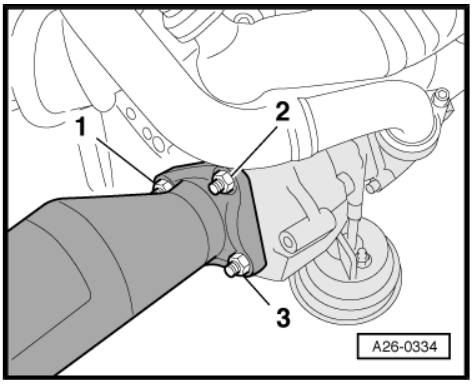

– Remove right air pipe with connecting hose -right arrows-.

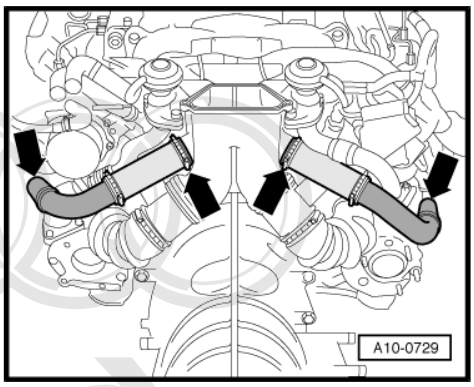

– Pull up retaining clip -1- approx. 10 mm.

– Unfasten hose clamp -3-.

– Detach air hose to turbocharger with air mass meter.

– Unplug connector -2-.

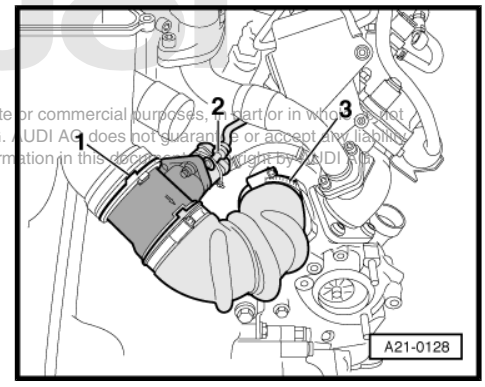

Copyright by AUDI AG. Copying for private or commercial purposes, in part or in whole, is not permitted unless authorised by AUDI AG. AUDI AG does not guarantee or accept any liability with respect to the correctness of information in this document. Copyright by AUDI AG.

– Detach oil pipe at cylinder block -arrow-.

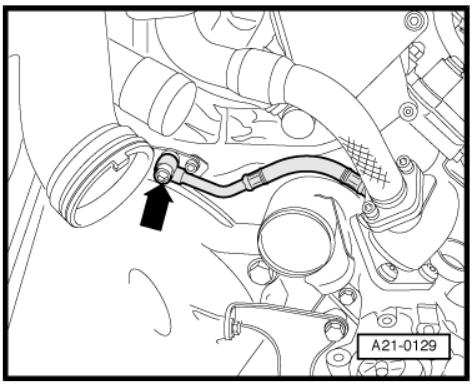

– Screw out bolts -1 … 4- of turbocharger holder.

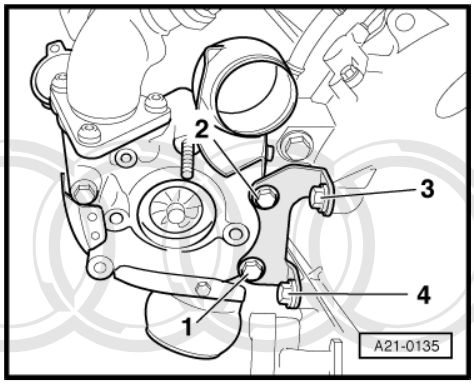

– Unplug connector -2- at right engine mounting.
– Unfasten cable tie -1- from trim.
– Unscrew clamp -3-.
– Remove right engine support -arrows-.

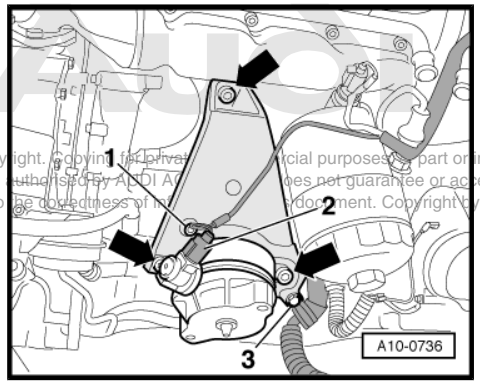

Protected by copyright. Copying for private or commercial purposes, in part or in whole, is not permitted unless authorised by AUDI AG. AUDI AG does not guarantee or accept any liability with respect to the correctness of information in this document. Copyright by AUDI AG.

– Detach vacuum hose -1-.
– Screw out bolt -2-.

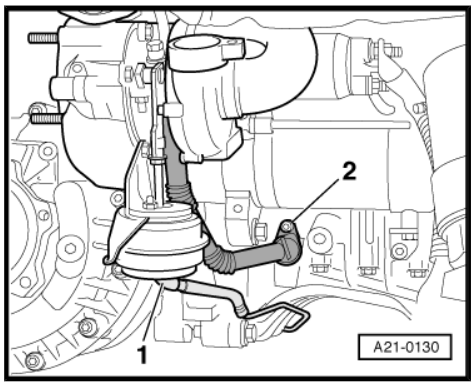

– Unscrew turbocharger from exhaust manifold -arrows-.

– Detach turbocharger and in doing so pull out oil return pipe from top part of sump.

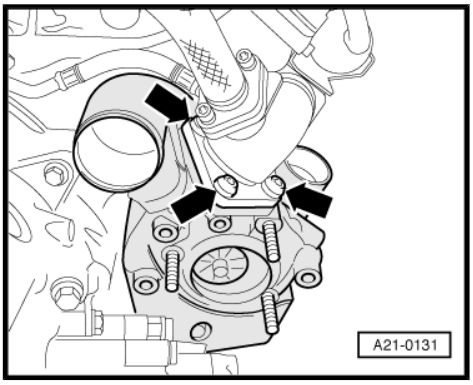

Note

Seal off oil bore in top part of sump with clean cloths.

Protected by copyright. Copying for private or commercial purposes, in part or in whole, is not permitted unless authorised by AUDI AG. AUDI AG does not guarantee or accept any liability with respect to the correctness of information in this document. Copyright by AUDI AG.

Installing

Install in reverse order, paying attention to the following:

Note

- *Replace gaskets, seals and self-locking nuts.*
- *Secure all hose connections with standard clamps ⇒ Parts catalogue .*
- *Hose connections and hoses for charge air system must be free of oil and grease before assembly.*
- *There must not be any leaks in the charge air system.*
- *Fill turbocharger with engine oil at oil supply pipe connection.*
- *Following installation, allow engine to idle for approx. 1 minute and do not rev up immediately so as to ensure that turbo-charger is supplied with oil.*

– Install engine ⇒ page 26 .

– Check oil level ⇒ page 161 .

Tightening torques

Component	Nm
Turbocharger to exhaust manifold	20 + 90° 18) 19)
Oil return pipe to top part of sump	10
Engine support to engine	42
Turbocharger holder	22
Oil supply pipe to cylinder block	15
Air pipe to turbocharger	10
Front exhaust pipe with catalytic converter to turbocharger	25
Clamps for air hoses	3,5

18) 90° corresponds to a quarter turn.

19) Replace bolts.

26 – Exhaust system

1 Removing and installing exhaust system components

Note

- *Replace gaskets and self-locking nuts.*
- *On completion of exhaust system installation work, make sure exhaust system is not subject to strain and that there is sufficient clearance from the body. If necessary, unfasten clamps and adjust position of silencers and exhaust pipes to create sufficient clearance from the body and to ensure uniform loading of the mountings.*
- *Heed installation position and installation dimensions of exhaust system ⇒ page 248 onwards.*
- *To avoid damage, the decoupling elements in the front exhaust pipes are not to be kinked by more than 10°.*

1.1 Exploded view of exhaust system

Protected by copyright. Copying for private or commercial purposes, in part or in whole, is not permitted unless authorised by AUDI AG. AUDI AG does not guarantee or accept any liability with respect to the accuracy of information in this document. Copyright by AUDI AG.

1 - Centre silencer

- ❑ Forms one unit with rear silencer as original equipment; can be replaced separately when performing repair work
- ❑ Cutting point ⇒ page 252
- ❑ Stress-free alignment of exhaust system ⇒ page 268

2 - Rubber mount

- ❑ Checking pre-tension ⇒ "1.8 Stress-free alignment of exhaust system", page 268

3 - Holder

4 - 25 Nm

5 - 25 Nm

- ❑ Replace

6 - Front exhaust pipe with oxidation catalytic converter and starter catalytic converter

- ❑ For right side of vehicle
- ❑ With decoupling element
- ❑ Removing and installing ⇒ page 259
- ❑ Protect against impact and jolts
- ❑ To avoid damage, do not kink decoupling ele-

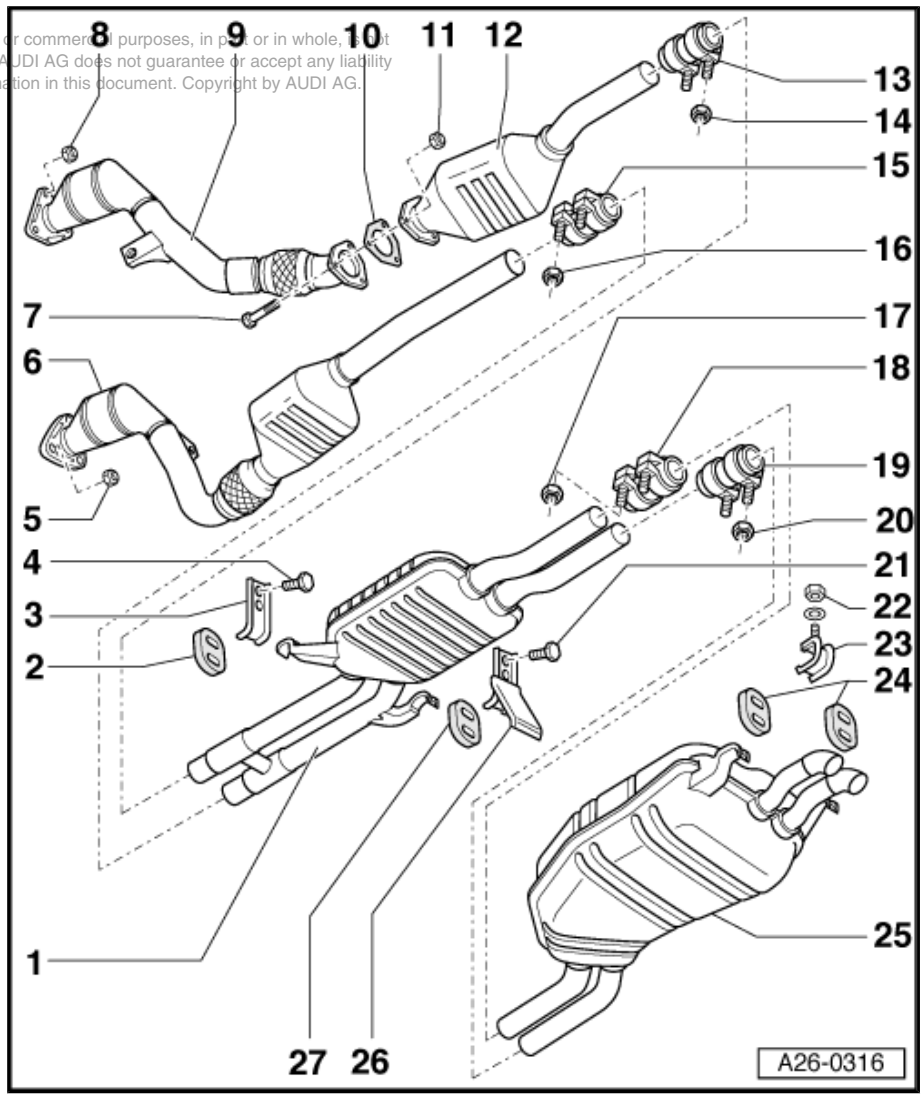

ment by more than 10°
- ❑ Mounting components ⇒ page 249
- ❑ Stress-free alignment of exhaust system ⇒ page 268

7 - 25 Nm

8 - 25 Nm
- ❑ Replace

9 - Front exhaust pipe with starter catalytic converter
- ❑ For left side of vehicle
- ❑ With decoupling element
- ❑ Removing and installing ⇒ page 252
- ❑ Protect against impact and jolts
- ❑ To avoid damage, do not kink decoupling element by more than 10°
- ❑ Mounting components ⇒ page 249
- ❑ Stress-free alignment of exhaust system ⇒ page 268

10 - Gasket
- ❑ Replace

11 - 25 Nm
- ❑ Replace

12 - Oxidation catalytic converter
- ❑ For left side of vehicle
- ❑ Protect against impact and jolts
- ❑ Stress-free alignment of exhaust system ⇒ page 268

13 - Front left clamp
- ❑ Before tightening, perform stress-free alignment of exhaust system ⇒ page 268
- ❑ Installation position: Bolted joint facing right
- ❑ Installation position of bolt ends ⇒ page 248
- ❑ Tighten bolted joints evenly

Reproduction of this document or parts thereof for purposes other than commercial purposes, in part or in whole, is not permitted unless authorised by AUDI AG. AUDI AG does not guarantee or accept any liability with respect to the correctness of information in this document. Copyright by AUDI AG.

14 - 40 Nm

15 - Front right clamp
- ❑ Before tightening, perform stress-free alignment of exhaust system ⇒ page 268
- ❑ Installation position: Bolted joint facing left
- ❑ Installation position of bolt ends ⇒ page 248
- ❑ Tighten bolted joints evenly

16 - 40 Nm

17 - 40 Nm

18 - Rear left clamp
- ❑ For separate replacement of centre and rear silencer
- ❑ Before tightening, perform stress-free alignment of exhaust system ⇒ page 268
- ❑ Installation position: Bolted joint facing left
- ❑ Installation position ⇒ page 248
- ❑ Tighten bolted joints evenly

19 - Rear right clamp
- ❑ For separate replacement of centre and rear silencer
- ❑ Before tightening, perform stress-free alignment of exhaust system ⇒ page 268
- ❑ Installation position: Bolted joint facing right
- ❑ Installation position ⇒ page 248
- ❑ Tighten bolted joints evenly

20 - 40 Nm

21 - 25 Nm

22 - 25 Nm

23 - Mounting

- ❑ Illustration shows left mounting

24 - Rubber mount

- ❑ Checking pre-tension ⇒ “1.8 Stress-free alignment of exhaust system ”, page 268

25 - Rear silencer

- ❑ Forms one unit with centre silencer as original equipment; can be replaced separately when performing repair work
- ❑ Cutting point ⇒ page 252
- ❑ Stress-free alignment of exhaust system ⇒ page 268

26 - Holder

- ❑ With guard

27 - Rubber mount

- ❑ Checking pre-tension ⇒ “1.8 Stress-free alignment of exhaust system ”, page 268

Installation position of front clamps

– Install clamps such that bolt ends do not project beyond lower edge of clamp.

• Bolted joints face one another.

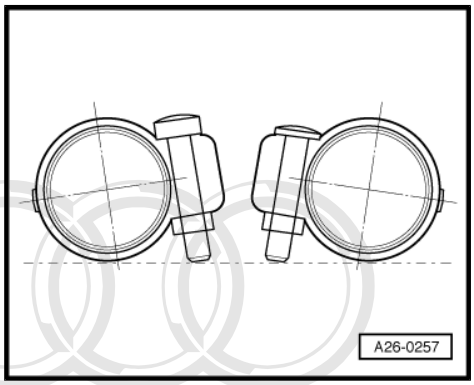

Installation position of rear clamps

– Install clamps such that bolt ends do not project beyond lower edge of clamp.

• Bolted joints face outwards.

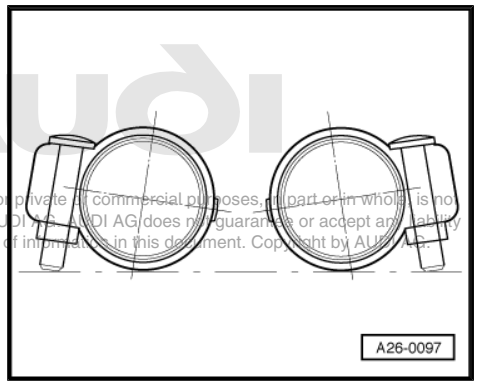

Protected by copyright. Copying for private or commercial purposes, in part or in whole, is not permitted unless authorised by AUDI AG. AUDI AG does not guarantee or accept any liability with respect to the correctness of information in this document. Copyright by AUDI AG.

Distance between exhaust pipes and floor cross-member

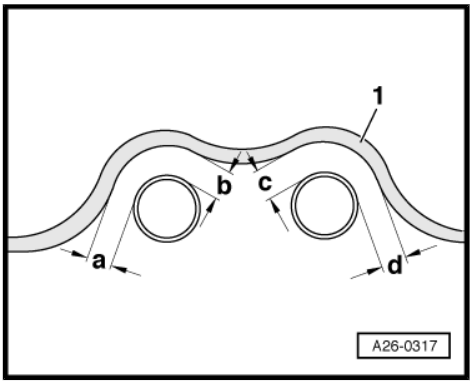

1 - Floor cross-member

- Dimension -a- = 22 ... 28 mm
- Dimension -b- = 26 ... 32 mm
- Dimension -c- = 26 ... 32 mm
- Dimension -d- = 22 ... 28 mm

Mounting components for front exhaust pipes

Protected by copyright. Copying for private or commercial purposes, in part or in whole, is not permitted unless authorised by AUDI AG. AUDI AG does not guarantee or accept any liability with respect to the correctness of information in this document. Copyright by AUDI AG.

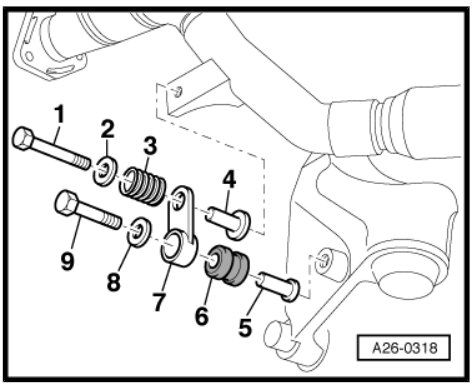

1 - Bolt - 25 Nm
2 - Washer
3 - Pressure spring
4 - Spacer sleeve
5 - Spacer sleeve
6 - Buffer
7 - Link plate
8 - Washer
9 - Bolt - 25 Nm

Note

- *Collar of spacer sleeve -Item 4- must face front exhaust pipe.*
- *Collar of spacer sleeve -Item 5- must face gearbox support.*

Front left exhaust pipe - distance from engine mounting

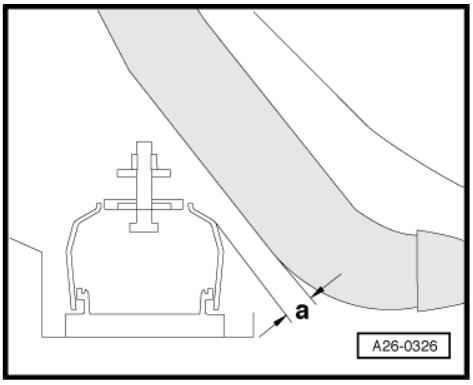

- Dimension -a- = 18.6 mm

Front left exhaust pipe - distance from longitudinal member and heat shield for drive shaft

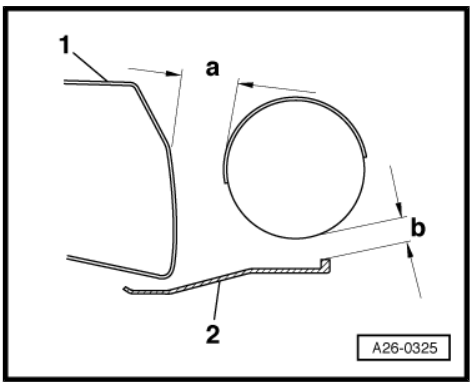

1 - Longitudinal member
2 - Heat shield for drive shaft on left

- Dimension -a- = 28.1 mm
- Dimension -b- = 16.1 mm

Front left exhaust pipe - distance between intermediate flange and gearbox/heat shield for selector lever cable

1 - Heat shield for selector lever cable

2 - Gearbox housing

- Dimension -a- = 6.8 mm
- Dimension -b- = 21.7 mm

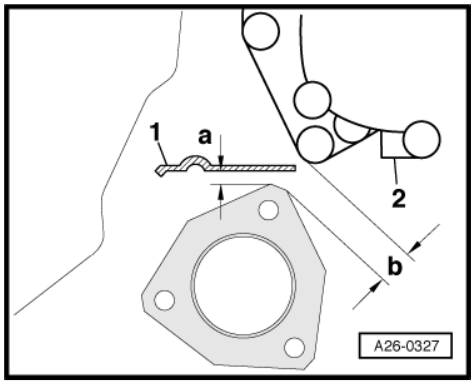

Front left exhaust pipe - distance between decoupling element and gearbox oil pan, transmission tunnel and heat shield for selector lever cable

1 - Transmission tunnel - vehicle floor

2 - Heat shield for selector lever cable

3 - Gearbox oil pan

- Dimension -a- = 12.3 mm
- Dimension -b- = 24.6 mm
- Dimension -c- = 18.3 mm

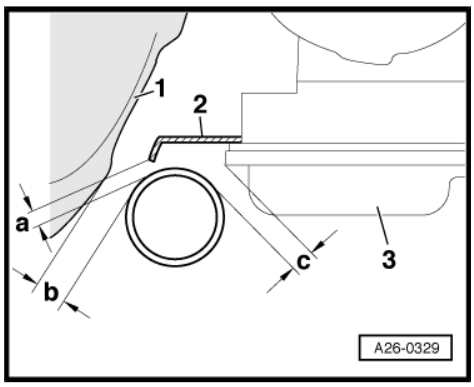

Front left and right exhaust pipe - distances between bends in front exhaust pipes and gearbox oil pan

- Dimension -a- = 14.1 mm
- Dimension -b- = 16.5 mm

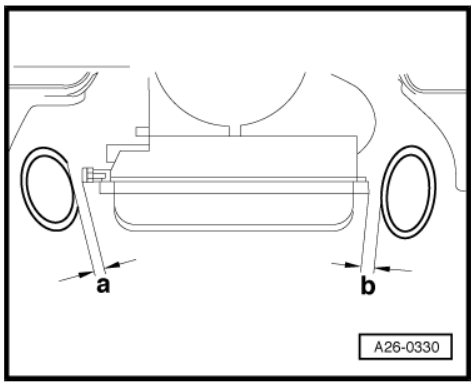

Front right exhaust pipe - distance from engine mounting

- Dimension -a- = 18.6 mm

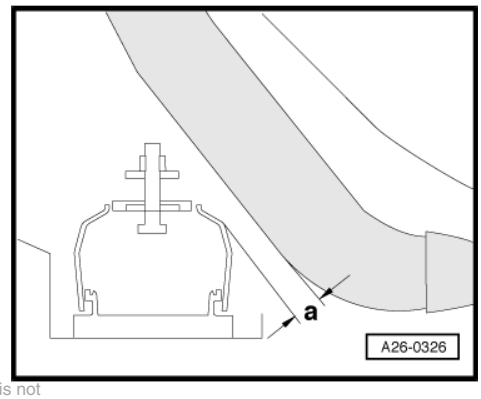

Protected by copyright. Copying for private or commercial purposes, in part or in whole, is not permitted unless authorised by AUDI AG. AUDI AG does not guarantee or accept any liability with respect to the correctness of information in this document. Copyright by AUDI AG.

Front right exhaust pipe - distance from longitudinal member and differential cover of gearbox

1 - Differential cover of gearbox

2 - Heat shield

3 - Longitudinal member

- Dimension -a- = 12.3 mm
- Dimension -b- = 22.4 mm

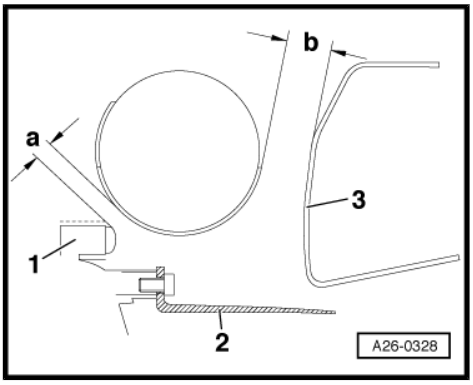

Distance of exhaust pipes from rear axle between centre and rear silencer

A - Exhaust pipes

B - Rear axle

- Dimension -a- = approx. 27 mm
- Dimension -b- = approx. 24.5 mm

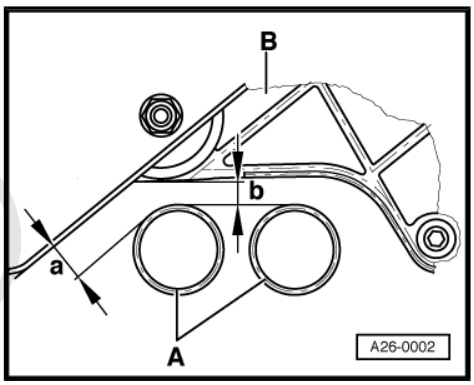

Note

The illustration shows the exhaust pipes from the rear viewed in direction of travel.

Tailpipe alignment

– Align tailpipes such that distance -a- on left is equal to distance -a- on right.

Protected by copyright. Copying for private or commercial purposes, in part or in
permitted unless authorised by AUDI AG. AUDI AG does not guarantee or accep
with respect to the correctness of information in this document. Copyright by A

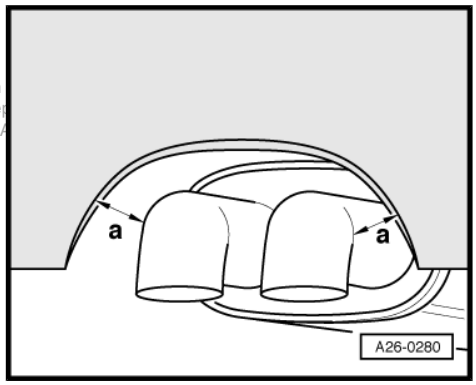

1.2 Separating centre and rear silencer

♦ A cutting point is provided in the connecting pipe for separate replacement of the centre or rear silencer.

♦ The cutting point is marked by indentations on the periphery of the exhaust pipe.

Special tools and workshop equipment required

♦ Chain pipe cutter -VAS 6254-

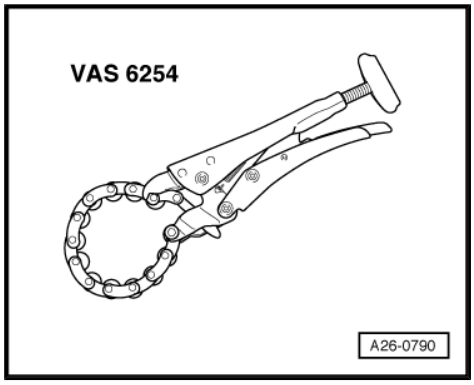

Sequence of operations

– Separate exhaust pipes at cutting points marked by a groove using chain pipe cutter -VAS 6254- .

• Dimension -a- = approx. 240 mm

• Dimension -b- = approx. 200 mm

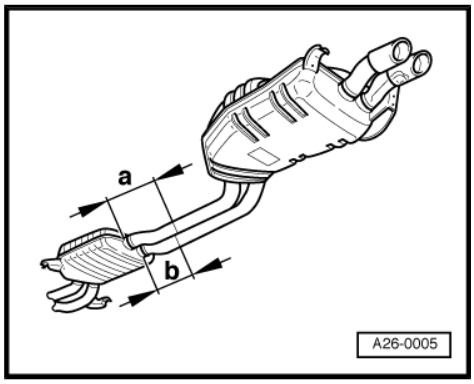

– On installation, centrally align clamp with separating cut.

– Install clamps such that bolt ends do not project beyond lower edge of clamp.

• Bolted joints face outwards.

– Perform stress-free alignment of exhaust system ⇒ page 268 .

– Uniformly tighten bolted joints of clamps to 40 Nm.

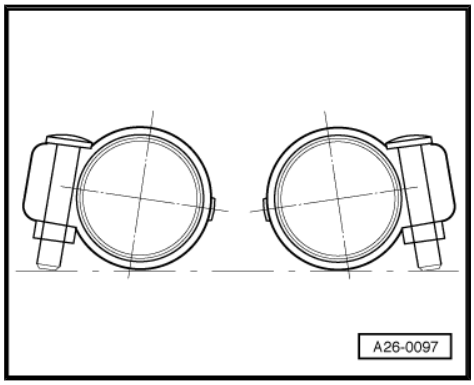

1.3 Removing and installing left front exhaust pipe with oxidation catalytic converter

Special tools and workshop equipment required

♦ Engine and gearbox lifter -V.A.G 1383 A-

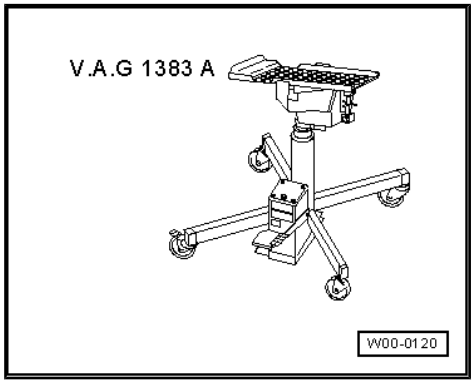

Protected by copyright. Copying for private or commercial purposes, in part or in whole, is not permitted unless authorised by AUDI AG. AUDI AG does not guarantee or accept any liability with respect to the correctness of information in this document. Copyright by AUDI AG.

- Drip tray for workshop cranes -VAS 6208- or -V.A.G 1306-

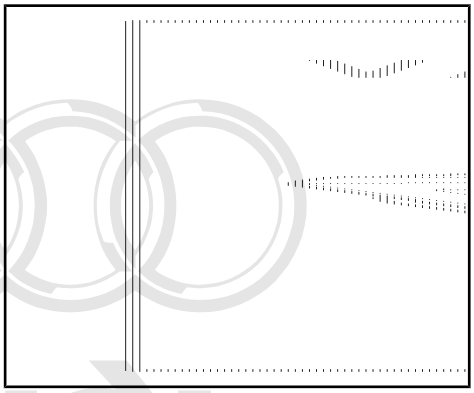

Removing

Protected by copyright. Copying for private or commercial purposes, in part or in whole, is not permitted unless authorised by AUDI AG. AUDI AG does not guarantee or accept any liability with respect to the correctness of information in this document. Copyright by AUDI AG.

Note

- *Replace gaskets and self-locking nuts.*
- *To avoid damage, decoupling element in front exhaust pipe is not to be kinked by more than 10°.*

WARNING

Hot vapour/coolant may escape when opening the expansion tank. Cover the cap with a cloth and open carefully.

– Open cap of coolant expansion tank.

– On vehicles with auxiliary heater, screw out bolts -arrows- for attaching exhaust pipe of auxiliary/supplementary heater to noise insulation.

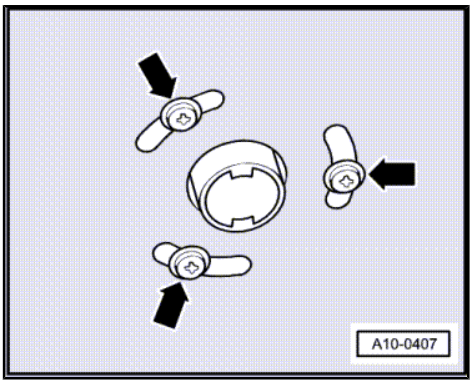

– Unfasten quick-release fasteners -1- and -2- and detach front and rear noise insulation.

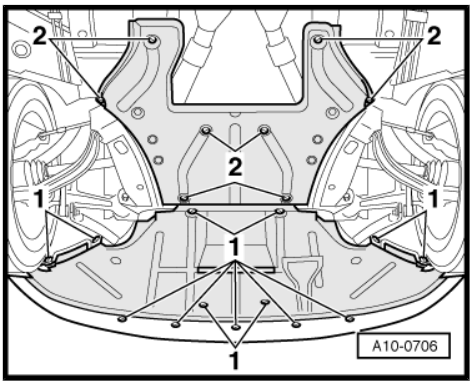

– Place drip tray for workshop cranes -VAS 6208- or -V.A.G 1306- beneath engine.

– Open drain plugs -2- and -3- and drain off coolant at engine only.

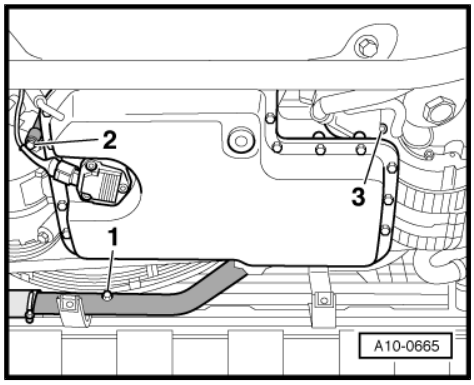

– Detach engine cover -arrows-.

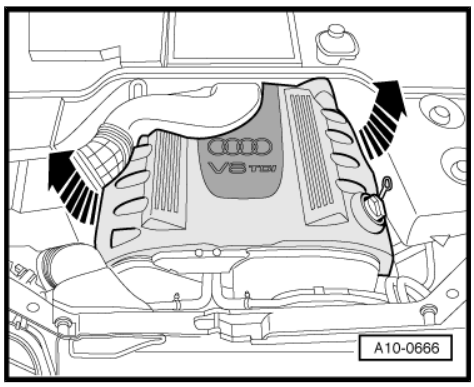

– Slacken off cross-head bolts -1- at electronics box in plenum chamber.

– Unclip plenum chamber cover -2- at front at bulkhead -arrows-.

– Detach right plenum chamber cover.

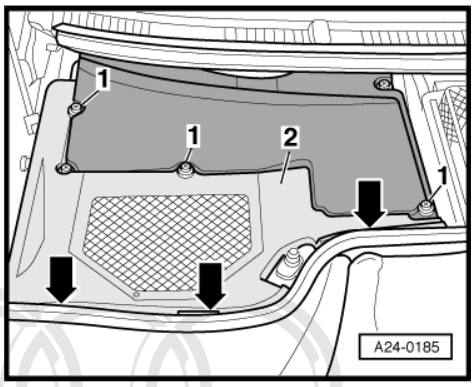

– Detach left plenum chamber cover -arrows-.

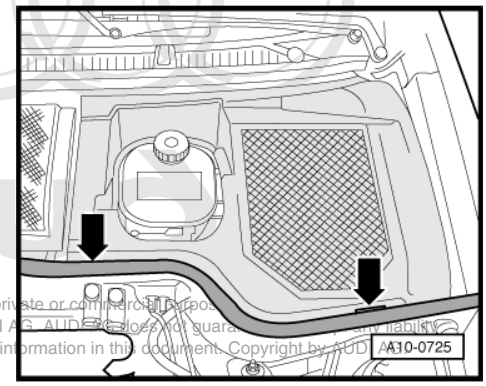

Protected by copyright. Copying for private or commercial purposes, in part or in whole, is not permitted unless authorised by AUDI AG. AUDI AG does not guarantee or assume any liability with respect to the correctness of information in this document. Copyright by AUDI AG.

– Unscrew dome brace -2- -arrows-.

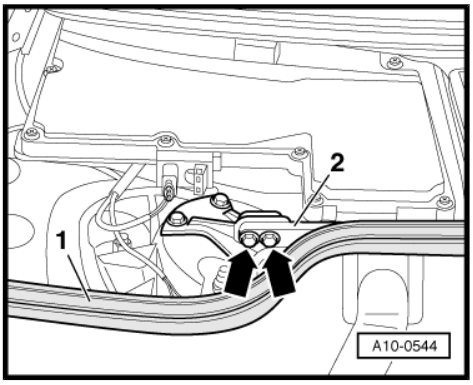

– Mark position of coolant hoses.
– Detach coolant hoses at breather connections -arrows-.
– Detach breather connections.

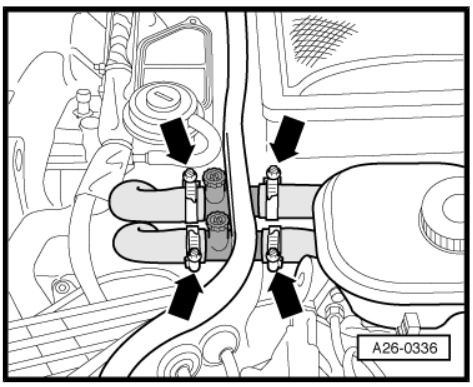

– Detach vacuum hoses -arrows-.
– Lay bare vacuum hoses.
– Unclip plastic holder of grey connector from bulkhead holder.

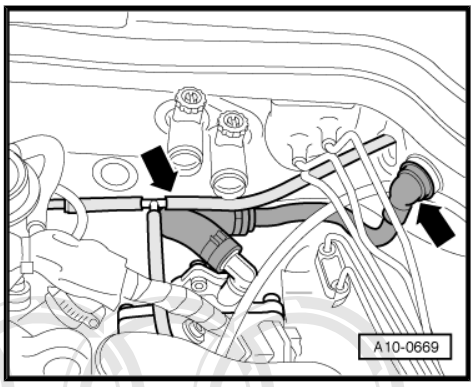

– Detach coolant hose -arrow- at top coolant pipe and take it out of mount on side of engine compartment.

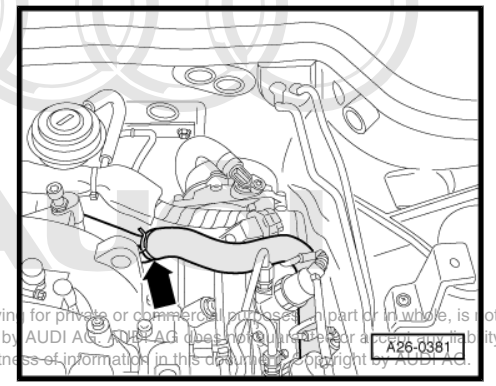

Protected by copyright. Copying for private or commercial purposes, in part or in whole, is not permitted unless authorised by AUDI AG. AUDI AG does not guarantee or assume any liability with respect to the correctness of information in this document. Copyright by AUDI AG.

– Remove left air pipe -arrows-.

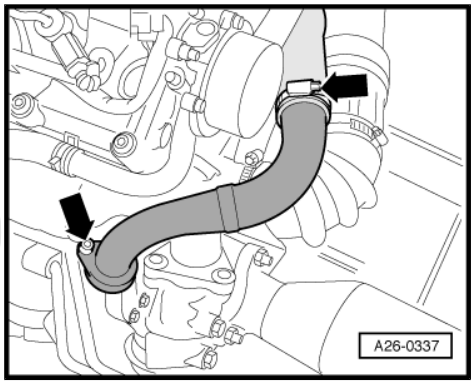

Note

Illustration shows engine removed.

– Unscrew front exhaust pipe/turbocharger nut -2- accessible from above.

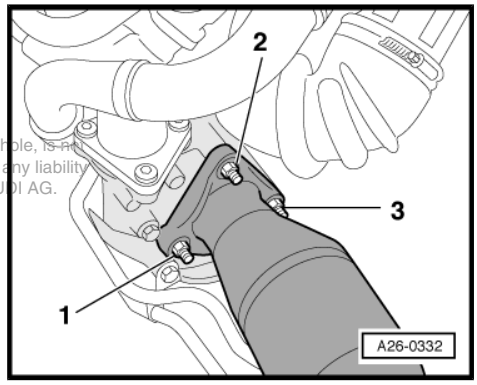

Note

Protected by copyright. Copying for private or commercial purposes, in part or in whole, is not permitted unless authorised by AUDI AG. AUDI AG does not guarantee or accept any liability with respect to the correctness of information in this document. Copyright by AUDI AG.

Illustration shows engine removed.

– Unscrew cross-piece -2- and holder -1- for rear noise insulation.

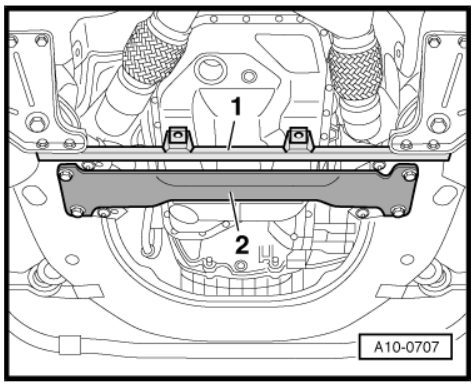

– Unclip wires -2- and -3- in left wheel housing.
– Unscrew holder of vehicle level sender -1-.

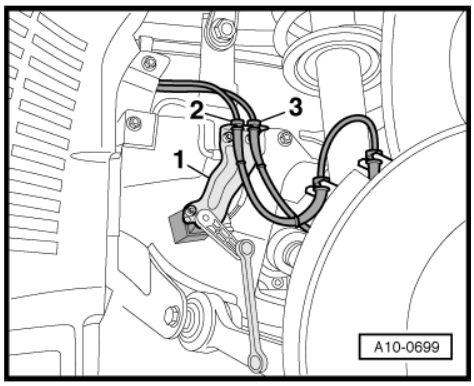

– Remove noise insulation over left drive shaft -arrows-.

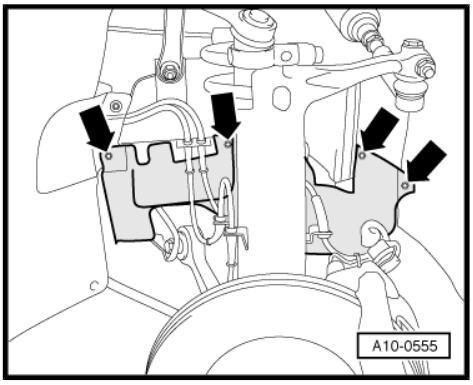

– Unscrew heat shield for left drive shaft from gearbox -arrows-.
– Unscrew left drive shaft -1- from gearbox flange shaft.

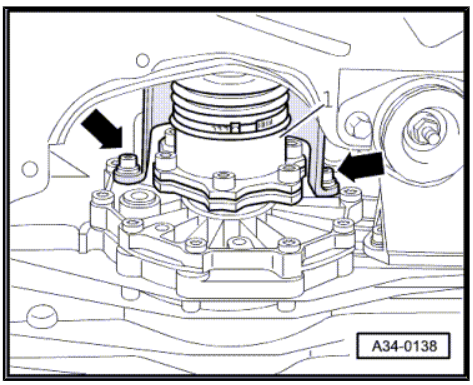

– Unscrew front exhaust pipe/turbocharger nuts -1- and -3- accessible from underneath.

Note

Illustration shows engine removed.

Reproduction or duplication for private, private or commercial purposes, in part or in whole, is not permitted unless authorised by AUDI AG. AUDI AG does not guarantee or accept any liability with respect to the correctness of information in this document. Copyright by AUDI AG.

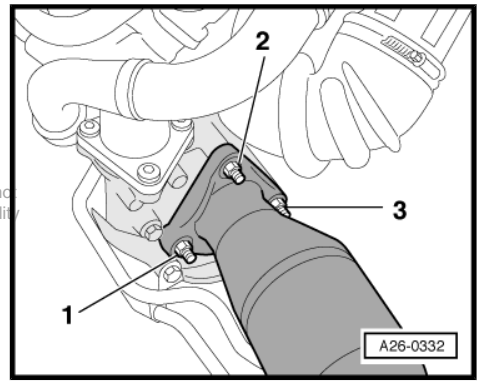

– Unscrew holder for front exhaust pipe -arrows-.

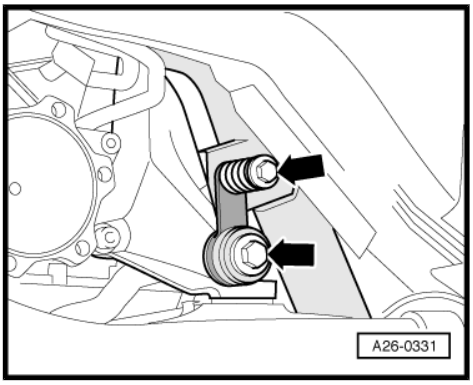

– Unfasten clamp -1- for left front exhaust pipe.

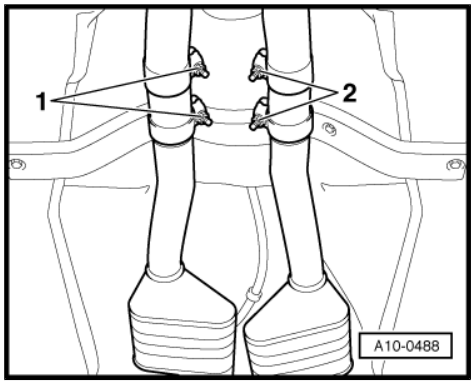

– Position engine and gearbox lifter -V.A.G 1383 A- beneath gearbox and support gearbox housing behind oil pan -arrow-.

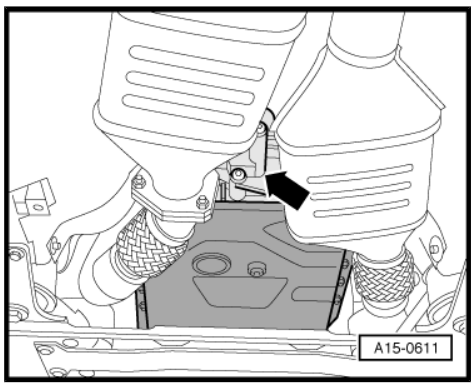

Protected by copyright. Copying for private or commercial purposes, in part or in whole, is not permitted unless authorised by AUDI AG. AUDI AG does not guarantee or accept any liability with respect to the correctness of information in this document. Copyright by AUDI AG.

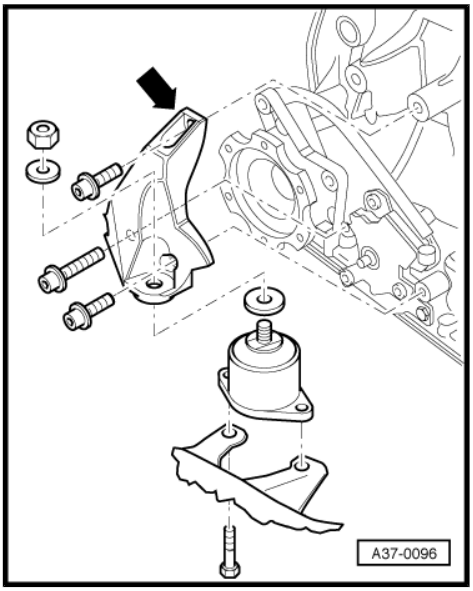

– Unscrew all bolts/nuts of left gearbox mounting and left gearbox support -arrow-.
– Detach gearbox mounting and gearbox support.
– Pull out engine and gearbox lifter -V.A.G 1383 A- from beneath gearbox housing.
– Take out front exhaust pipe.

Installing

Install in reverse order; paying attention to the following:

Note

- *Replace gaskets, seals and self-locking nuts.*
- *Secure all hose connections with standard clamps ⇒ Parts catalogue .*

– Heed installation position and installation dimensions of exhaust system ⇒ page 248 onwards.
– Perform stress-free alignment of exhaust system ⇒ page 268 .

Note

Mounting components for exhaust system at gearbox *⇒ page 249*

– Screw drive shaft to flange shaft of gearbox ⇒ Running gear, front-wheel drive and four-wheel drive; Rep. Gr. 40 .
– Replenish coolant ⇒ page 168 .

Tightening torques

Component	Nm
Gearbox support to gearbox	40
Gearbox mounting to gearbox support	40
Gearbox mounting to subframe	40
Front exhaust pipe with oxidation catalytic converter to turbocharger	25
Mounting lug for front exhaust pipe to gearbox support	25
Front exhaust pipe with oxidation catalytic converter to mounting lug	25
Drive shaft guard to gearbox	23
Clamp for exhaust pipe	40
Clamps for coolant hoses	2
Clamps for air hoses	3,5

Copyright by AUDI AG. Copying for private or commercial purposes, in part or in whole, is not permitted unless authorised by AUDI AG. AUDI AG does not guarantee or accept any liability with respect to the correctness of information in this document. Copyright by AUDI AG.

1.4 Removing and installing right front exhaust pipe with oxidation catalytic converter

Special tools and workshop equipment required

♦ Engine and gearbox lifter -V.A.G 1383 A-

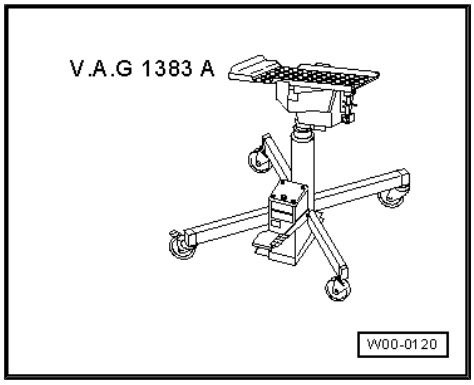

Removing

– Detach engine cover -arrows-.

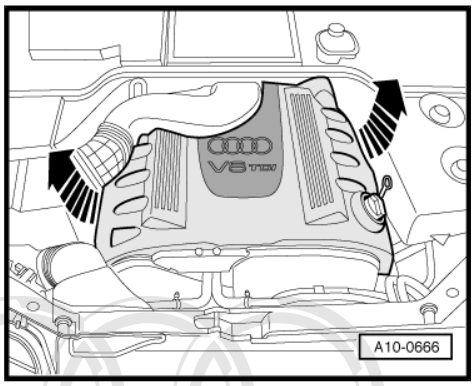

– Unclip cover -2-.
– Detach air duct -1- to lock carrier.

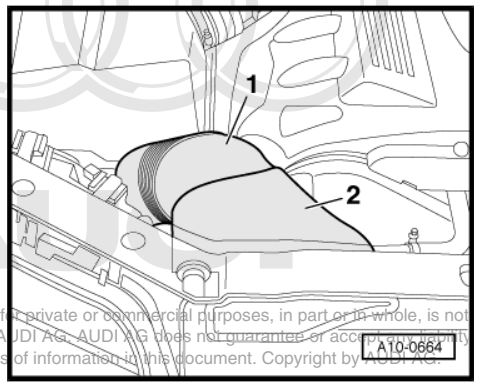

Protected by copyright. Copying for private or commercial purposes, in part or in whole, is not permitted unless authorised by AUDI AG. AUDI AG does not guarantee or accept any liability with respect to the correctness of information in this document. Copyright by AUDI AG.

– Remove cover on right in engine compartment -arrows-.

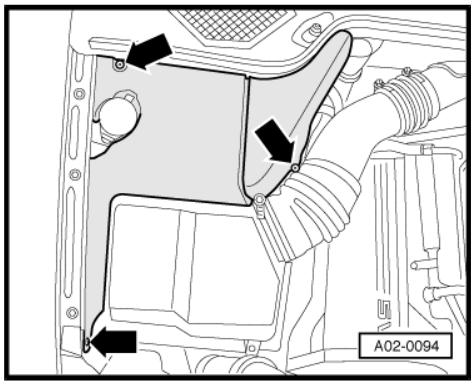

– Unfasten hose clamp -1-.
– Remove air cleaner housing -arrows-.

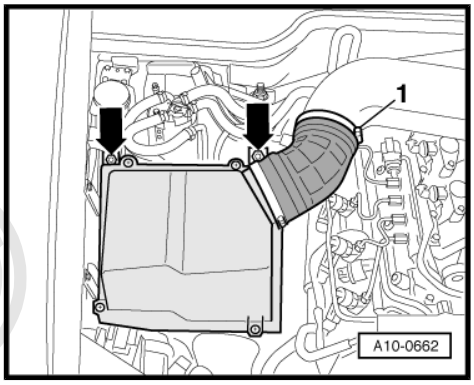

– Remove top air pipe -arrows-.

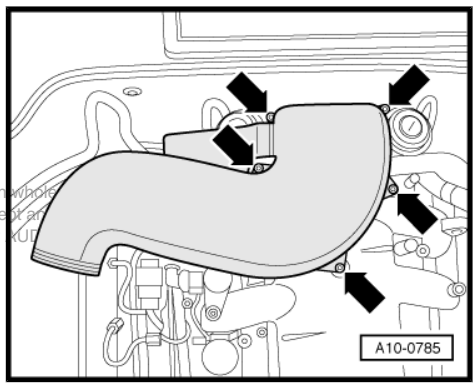

Note

Seal off inlet connections with clean cloths.

Protected by copyright. Copyright by AUDI
permitted unless authorised by AUDI AG. AUDI AG does not guarantee or accept an
with respect to the correctness of information in this document. Copyright by AUDI

– Remove right air pipe -arrows-.

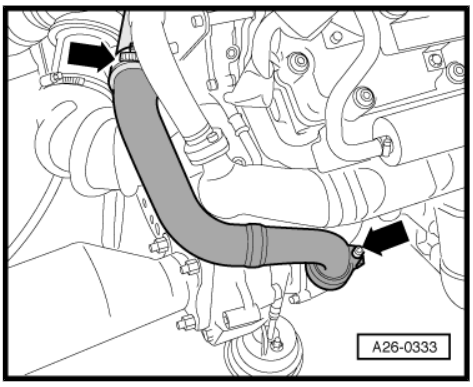

Note

Illustration shows engine removed.

– Unscrew front exhaust pipe/turbocharger nuts -1- and -2- accessible from above.

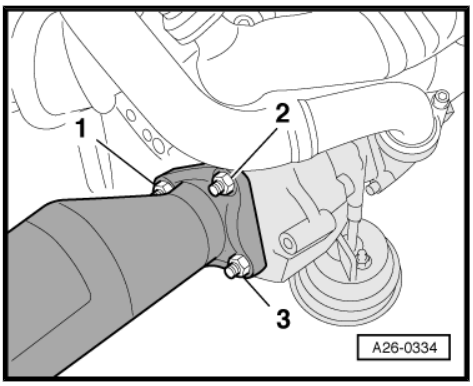

Note

Illustration shows engine removed.

– On vehicles with auxiliary heater, screw out bolts -arrows- for attaching exhaust pipe of auxiliary/supplementary heater to noise insulation.

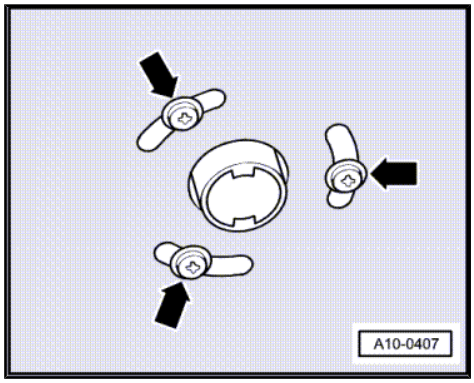

– Unfasten quick-release fasteners -1- and -2- and detach front and rear noise insulation.

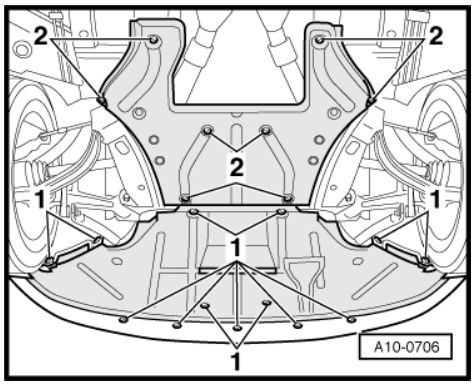

– Unscrew cross-piece -2- and holder -1- for rear noise insulation.

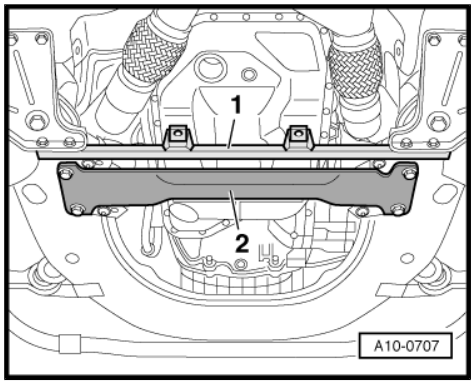

Protected by copyright. Copying for private or commercial purposes, in part or in whole, is not permitted unless authorised by AUDI AG. AUDI AG does not guarantee or accept any liability with respect to the correctness of information in this document. Copyright by AUDI AG.

– Remove noise insulation over right drive shaft -arrows-.

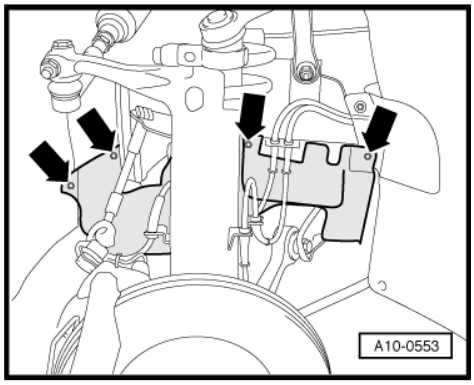

– Unscrew heat shield for right drive shaft -1- from gearbox -arrows-.

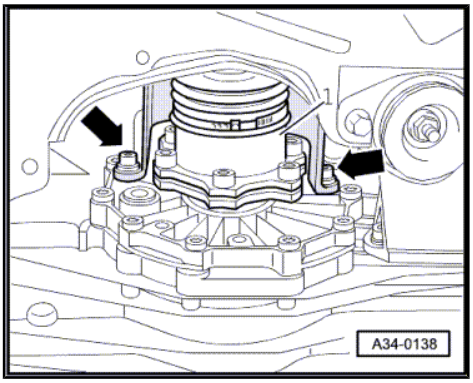

– Unscrew front exhaust pipe/turbocharger nut -3- accessible from underneath.

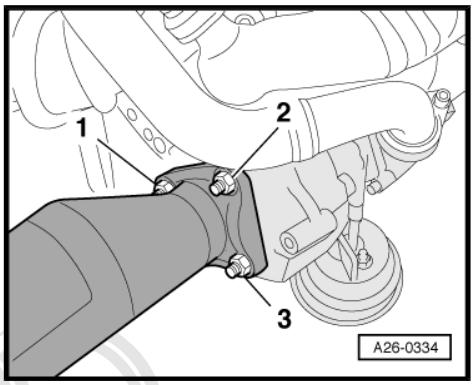

Note

Illustration shows engine removed.

– Unscrew holder for front exhaust pipe -arrows-.

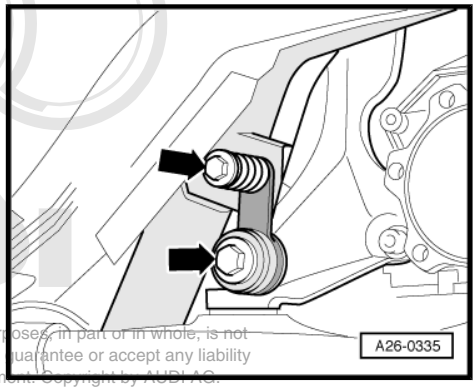

Protected by copyright. Copying for private or commercial purposes, in part or in whole, is not permitted unless authorised by AUDI AG. AUDI AG does not guarantee or accept any liability with respect to the correctness of information in this document. Copyright by AUDI AG.

– Unfasten clamp -2- for right front exhaust pipe.

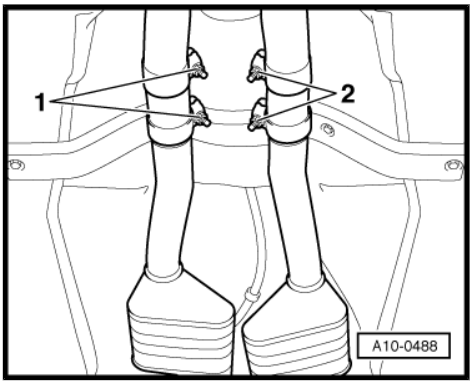

– Position engine and gearbox lifter -V.A.G 1383 A- beneath gearbox and support gearbox housing behind oil pan -arrow-.

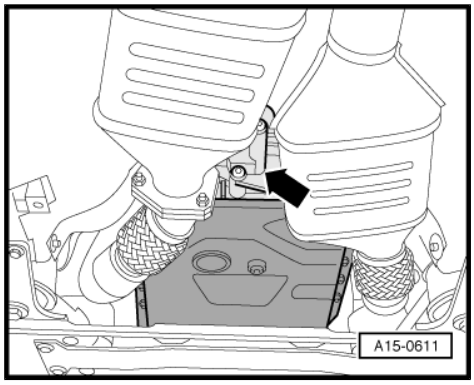

– Unscrew all bolts/nuts of right gearbox mounting and right gearbox support -arrow-.
– Detach gearbox mounting and take out gearbox support.
– Take out engine and gearbox lifter -V.A.G 1383 A- from beneath gearbox housing.
– Take out front exhaust pipe.

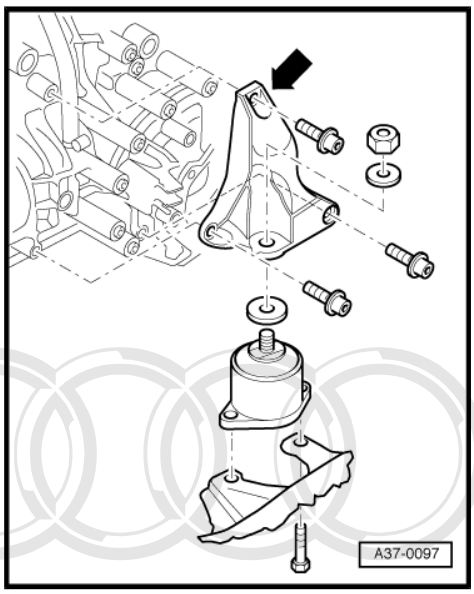

Installing

Install in reverse order; paying attention to the following:

Note

- *Replace gaskets, seals and self-locking nuts.*
- *Secure all hose connections with standard clamps ⇒ Parts catalogue .*

– Heed installation positions and installation dimensions of exhaust system ⇒ page 248 to ⇒ page 251
– Perform stress-free alignment of exhaust system ⇒ page 268 .

Protected by copyright. Copying for private or commercial purposes, in part or in whole, is not permitted unless authorised by AUDI AG. AUDI AG does not guarantee or accept any liability with respect to the correctness of information in this document. Copyright by AUDI AG.

Note

Mounting components for exhaust system at gearbox *⇒ page 249*

Tightening torques

Component	Nm
Gearbox support to gearbox	40
Gearbox mounting to gearbox support	40
Gearbox mounting to subframe	40
Front exhaust pipe with oxidation catalytic converter to turbocharger	25
Mounting lug for front exhaust pipe to gearbox support	25
Front exhaust pipe with oxidation catalytic converter to mounting lug	25
Drive shaft guard to gearbox	23
Clamp for exhaust pipe	40
Clamps for air hoses	3,5

1.5 Exploded view of exhaust manifold

Note

The illustration shows the exhaust manifold for the left cylinder bank.

1 - Exhaust manifold
- ❑ Removing and installing: Left ⇒ page 266 , right ⇒ page 267

2 - 25 Nm
- ❑ Replace

3 - Gasket
- ❑ Replace

4 - 10 Nm

5 - Connecting pipe
- ❑ To mechanical exhaust gas recirculation valve

6 - Gasket
- ❑ Replace

7 - 20 Nm + further 90° (1/4) turn
- ❑ Replace

8 - Gasket
- ❑ Replace

9 - Turbocharger
- ❑ Removing and installing: Left ⇒ page 239 , right ⇒ page 243

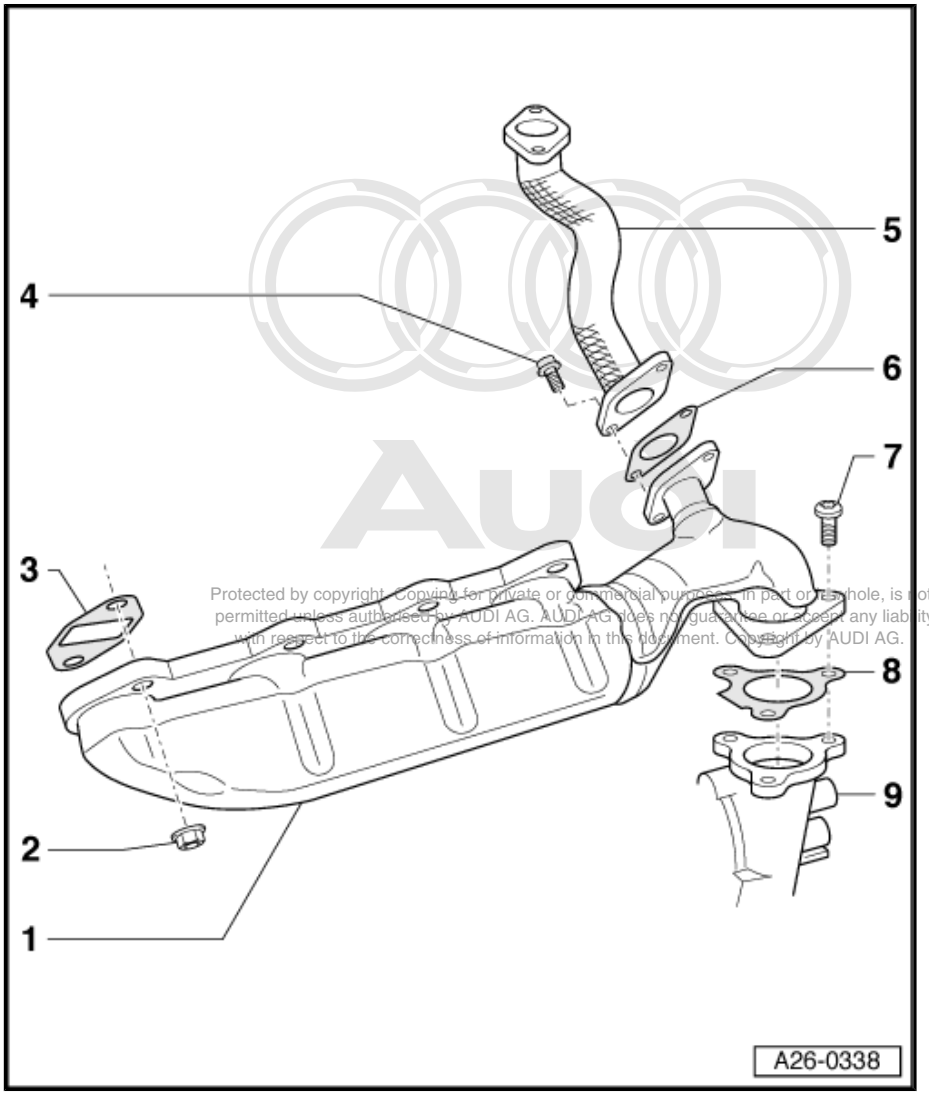

Protected by copyright. Copying for private or commercial purposes, in part or in whole, is not permitted unless authorised by AUDI AG. AUDI AG does not guarantee or accept any liability with respect to the correctness of information in this document. Copyright by AUDI AG.

1.6 Removing and installing left exhaust manifold

Removing

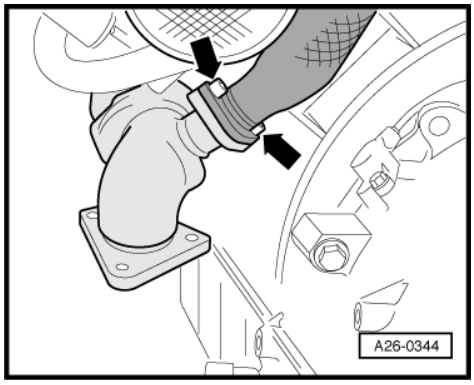

Note

The exhaust manifolds can only be detached with the engine removed.

– Remove engine ⇒ page 4 .
– Remove left turbocharger ⇒ page 239 .
– Screw out bolts -arrows-.

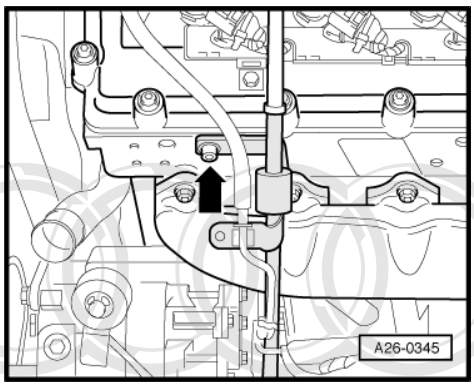

– Unscrew and lift off guide tube for dipstick at cylinder head -arrow-.

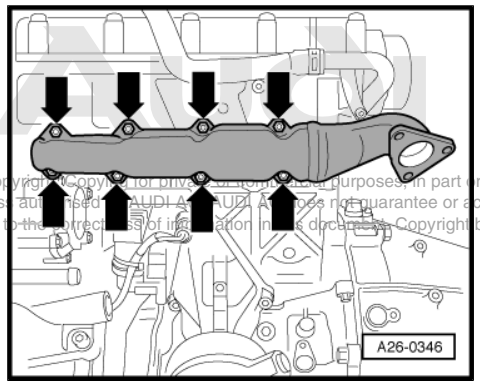

– Unscrew all exhaust manifold nuts -arrows-.
– Detach exhaust manifold.

Installing

Install in reverse order; paying attention to the following:

Protected by copyright. Copyright for private or commercial purposes, in part or in whole, is not permitted unless authorised by AUDI AG. AUDI AG does not guarantee or accept any liability with respect to the correctness of information in this document. Copyright by AUDI AG.

Note

Replace gaskets, seals and self-locking nuts.

– Install left turbocharger ⇒ page 242 .
– Attach front exhaust pipes to engine ⇒ page 249
– Install engine ⇒ page 26 .
– Perform stress-free alignment of exhaust system ⇒ page 268 .

Tightening torques

Component	Nm
Exhaust manifold to cylinder head	25
Connecting pipe for exhaust gas recirculation to exhaust manifold	10
Guide tube for dipstick to cylinder head	10

1.7 Removing and installing right exhaust manifold

Removing

Note

The exhaust manifolds can only be detached with the engine removed.

– Remove engine ⇒ page 4 .

– Remove right air pipe -arrows-.

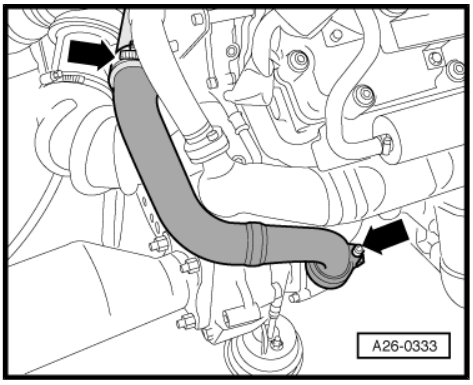

– Screw out connecting pipe/exhaust manifold bolts -top arrows-.

– Screw out exhaust manifold/turbocharger bolts -bottom arrows-.

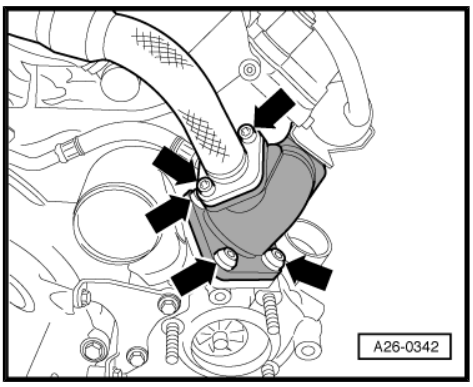

– Screw out bolts -arrows-.

– Press fuel cooler with connected pipes upwards.

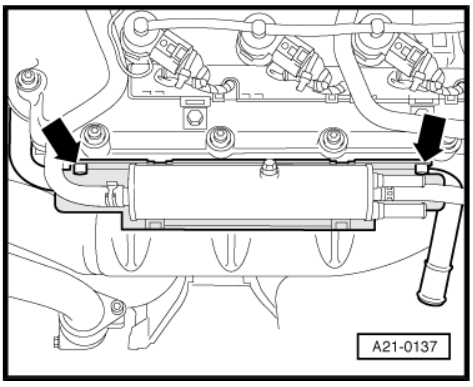

– Unplug connector -2- at right engine mounting.

– Unfasten cable tie -1- from trim.

– Unscrew clamp -3-.

– Remove right engine support -arrows-.

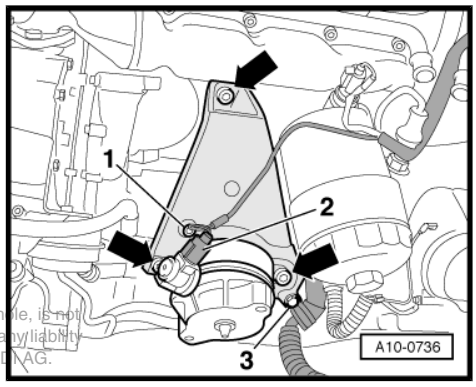

Protected by copyright. Copying for private or commercial purposes, in part or in whole, is not permitted unless authorised by AUDI AG. AUDI AG does not guarantee or accept any liability with respect to the correctness of information in this document. Copyright by AUDI AG.

– Unscrew all exhaust manifold nuts -arrows-.
– Press coolant pipe upwards slightly.
– Detach exhaust manifold.

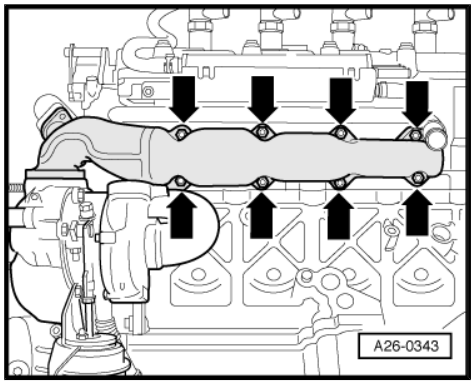

Installing

Install in reverse order; paying attention to the following:

Note

Always replace gaskets, seals and self-locking nuts.

– Attach front exhaust pipes to engine
⇒ Fig. " Mounting components for front exhaust pipes " , page 249
– Install engine ⇒ page 26 .
– Perform stress-free alignment of exhaust system
⇒ page 268 .

Tightening torques

Component	Nm
Exhaust manifold to cylinder head	25
Engine support to engine	42
Fuel cooler and coolant pipe to cylinder head	10
Turbocharger to exhaust manifold	20 + 90° 20) 21)
Connecting pipe for exhaust gas recirculation to exhaust manifold	10
Air pipe to turbocharger	10

20) 90° corresponds to a quarter turn.

21) Replace bolts.

1.8 Stress-free alignment of exhaust system

Note

- *Heed installation position and installation dimensions of exhaust system* *⇒ page 248* *onwards.*
- *Exhaust system alignment is performed when cold.*

Vehicles with clamp between centre and rear silencer

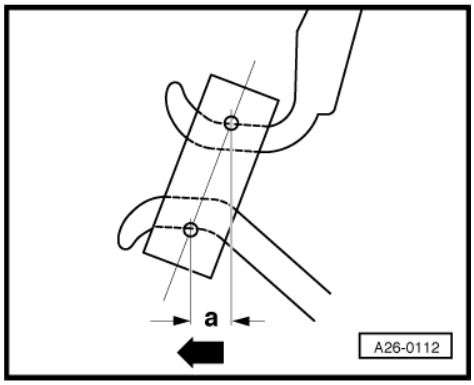

Note

Additional alignment of the centre silencer is only required on vehicles with clamp between centre and rear silencer.

Protected by copyright. Copying for private or commercial purposes, in part or in whole, is not permitted unless authorised by AUDI AG. AUDI AG does not guarantee or accept any liability with respect to the correctness of information in this document. Copyright by AUDI AG.

– Unfasten bolted joints of front clamps ⇒ Item 13 (page 247) and ⇒ Item 15 (page 247) .
– Press exhaust system forwards -arrow- until pre-tension at rubber mount at front left at centre silencer is -a- = 10 mm.
– Uniformly tighten bolted joints of clamps to 40 Nm.
– Pay attention to installation position of clamps ⇒ page 248

– Unfasten bolted joints of rear clamps ⇒ Item 18 (page 247) and ⇒ Item 19 (page 247) .
– Press rear silencer forwards -arrow- until pre-tension at rubber mount at rear left at rear silencer is -a- = 10 mm.
– Uniformly tighten bolted joints of clamps to 40 Nm.
– Pay attention to installation position of clamps ⇒ page 248

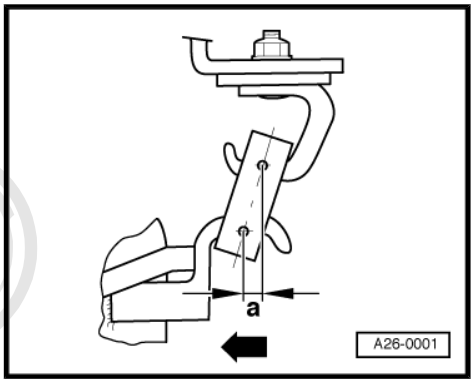

Vehicles with no clamp between centre and rear silencer

– Unfasten bolted joints of clamps ⇒ Item 13 (page 247) and ⇒ Item 15 (page 247) .
– Press exhaust system forwards -arrow- until pre-tension at rubber mount at rear left at rear silencer is -a- = 10 mm.
– Uniformly tighten bolted joints of clamps to 40 Nm.
– Pay attention to installation position of clamps ⇒ page 248

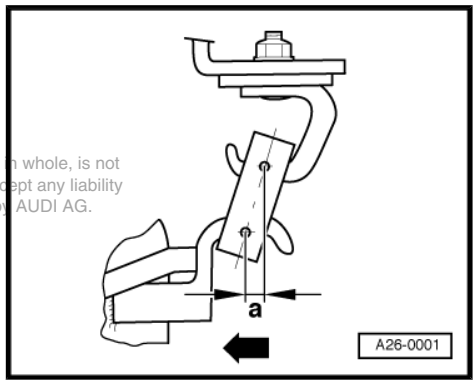

Copyright by AUDI AG. Reproduction for commercial purposes, in part or in whole, is not permitted unless authorised by AUDI AG. AUDI AG does not guarantee or accept any liability with respect to the correctness of information in this document. Copyright by AUDI AG.

1.9 Checking exhaust system for leaks

– Start engine and leave it idling.
– Seal off tailpipes for duration of leak test with cloths or plugs for example.
– Listen at joints between cylinder head/exhaust manifold, exhaust manifold/turbocharger, turbocharger/catalytic converter etc. to check for leaks.
– Eliminate any leaks found.

2 Exhaust gas recirculation system

Note

- *The exhaust gas recirculation system is actuated by signals from the diesel direct injection system control unit -J248- via the exhaust gas recirculation valves -N18- and -N213- to the mechanical exhaust gas recirculation valves.*
- *The mechanical exhaust gas recirculation valve with tapered valve tappet permits various opening cross-sections with differing valve stroke.*
- *Clocked actuation permits any desired valve position.*

2.1 Connection diagram for exhaust gas recirculation

1 - Mechanical exhaust gas recirculation valve
- ❑ For right cylinder bank
- ❑ Checking ⇒ page 277

2 - Mechanical exhaust gas recirculation valve
- ❑ For left cylinder bank
- ❑ Checking ⇒ page 277

3 - Vacuum pump
- ❑ Removing and installing ⇒ page 99

4 - Brake servo

5 - Vacuum reservoir
- ❑ Fitting location: In front left wheel housing beneath liner

6 - Non-return valve
- ❑ Installation position (light/dark side): As shown

7 - To variable intake manifold flap changeover valve -N239- and charge pressure control solenoid valves -N75- and -N274-

8 - Exhaust gas recirculation valve 2 -N213-
- ❑ For left cylinder bank

9 - Exhaust gas recirculation valve -N18-
- ❑ For right cylinder bank

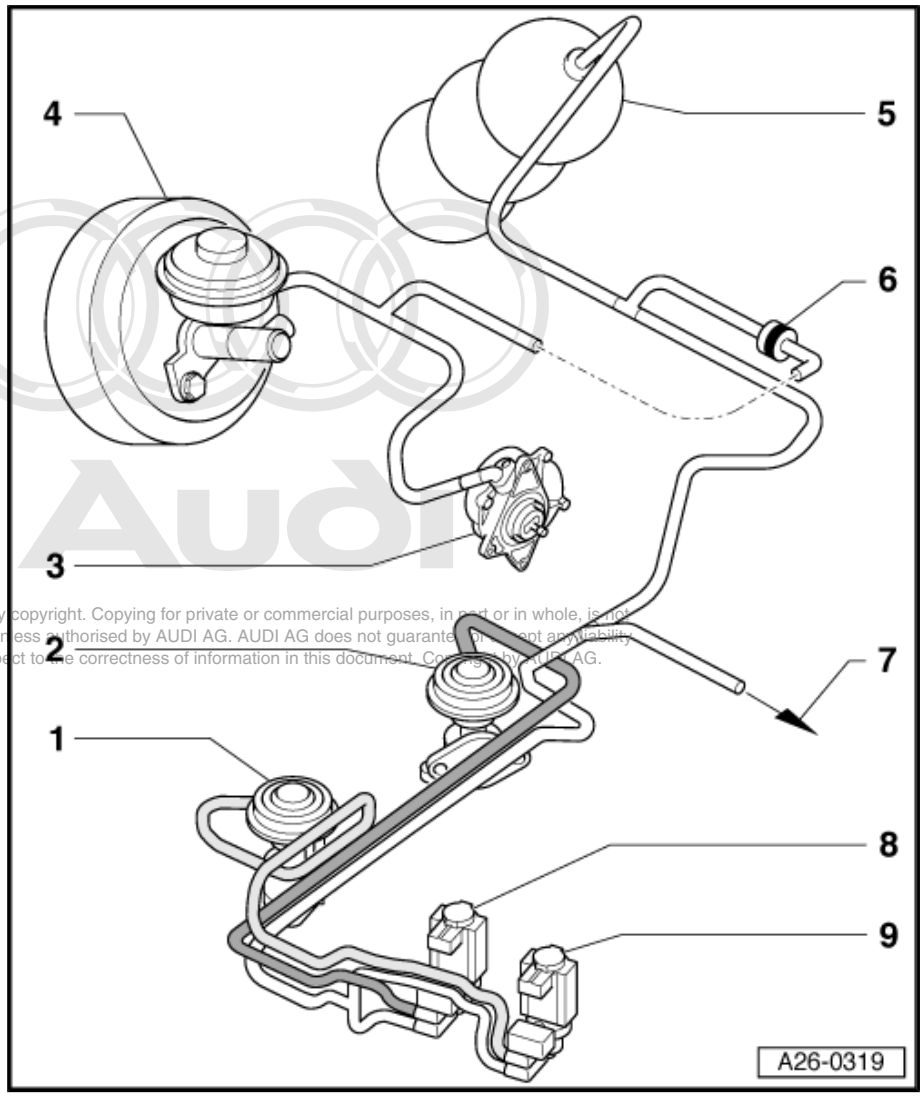

Protected by copyright. Copying for private or commercial purposes, in part or in whole, is not permitted unless authorised by AUDI AG. AUDI AG does not guarantee or accept any liability with respect to the correctness of information in this document. Copyright by AUDI AG.

2.2 Checking exhaust gas recirculation

Exhaust gas recirculation is checked using the vehicle diagnostic, testing and information system -VAS 5051 A- in the “Basic setting” function. This procedure causes the exhaust gas recirculation

valve to be pulsed every 10 seconds to permit reading of extreme values for exhaust gas recirculation (air mass meter).

Special tools and workshop equipment required

- ♦ Vehicle diagnostic, testing and information system - VAS 5051 A- with diagnostic wire -VAS 5051/1-

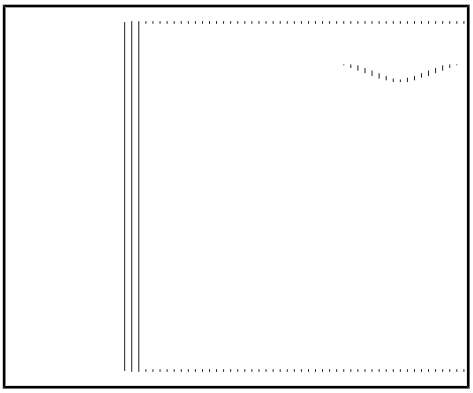

Test conditions

- Coolant temperature at least 80 °C
- Vehicle diagnostic, testing and information system - VAS 5051 A- with diagnostic wire -VAS 5051/1- connected, vehicle self-diagnosis and vehicle system “01 - Engine electronics” selected; the engine must be idling when doing so

Test sequence

Display on -VAS 5051 A- :

– From list -1- select function “04 - Basic setting”.

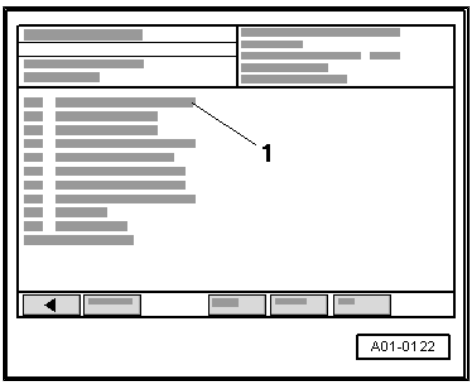

Display on -VAS 5051 A- :

– Use keypad -2- to enter “003” for “Display group 003” and confirm by touching Q key.

1 - Enter display group

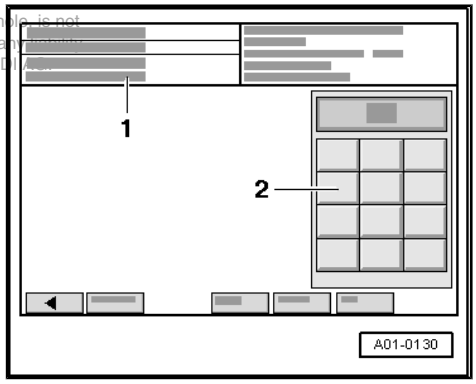

Copyright. Copying for private or commercial purposes, in part or in whole, is not permitted unless authorised by AUDI AG. AUDI AG does not guarantee or accept any liability with respect to the correctness of information. Copyright by AUDI AG.

– Activate basic setting by touching key A.

Display on -VAS 5051 A- :

- Idling speed is increased to 1000 rpm.

– Check display in zones -2- and -3-.

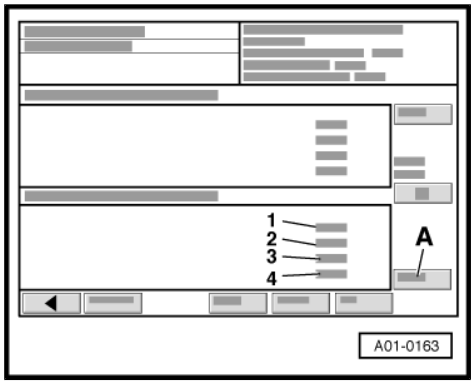

Display zones		Specification
2	EGR …	Actuation of exhaust gas recirculation valves -N18- and -N213- , display alternates every 10 seconds • "EGR active" • "EGR not active"
3	… mg/S	Intake air mass, alternating every 10 seconds • "… mg/S" must change appreciably

– Terminate function "04 - Basic setting" by touching ↵ key.

– Touch "06 - End output".

– Switch off ignition.

If readings do not match specifications:

– Check mechanical exhaust gas recirculation valve ⇒ page 277 .

– Check vacuum tubing ⇒ page 270 .

– Check exhaust gas recirculation valves -N18- and -N213- ⇒ page 273 .

Protected by copyright. Copying for private or commercial purposes, in part or in whole, is not permitted unless authorised by AUDI AG. AUDI AG does not guarantee or accept any liability with respect to the correctness of information in this document. Copyright by AUDI AG.

2.3 Checking exhaust gas recirculation valves -N18- and -N213-

Special tools and workshop equipment required

- Vacuum hand pump with accessories -V.A.G 1390-
- Portable multimeter -V.A.G 1526 B- or -V.A.G 1526 A-
- Adapter set -V.A.G 1594 C- or -V.A.G 1594 B-
- Test box -V.A.G 1598/30-
- Vehicle diagnostic, testing and information system -VAS 5051 A- with diagnostic wire -VAS 5051/1-

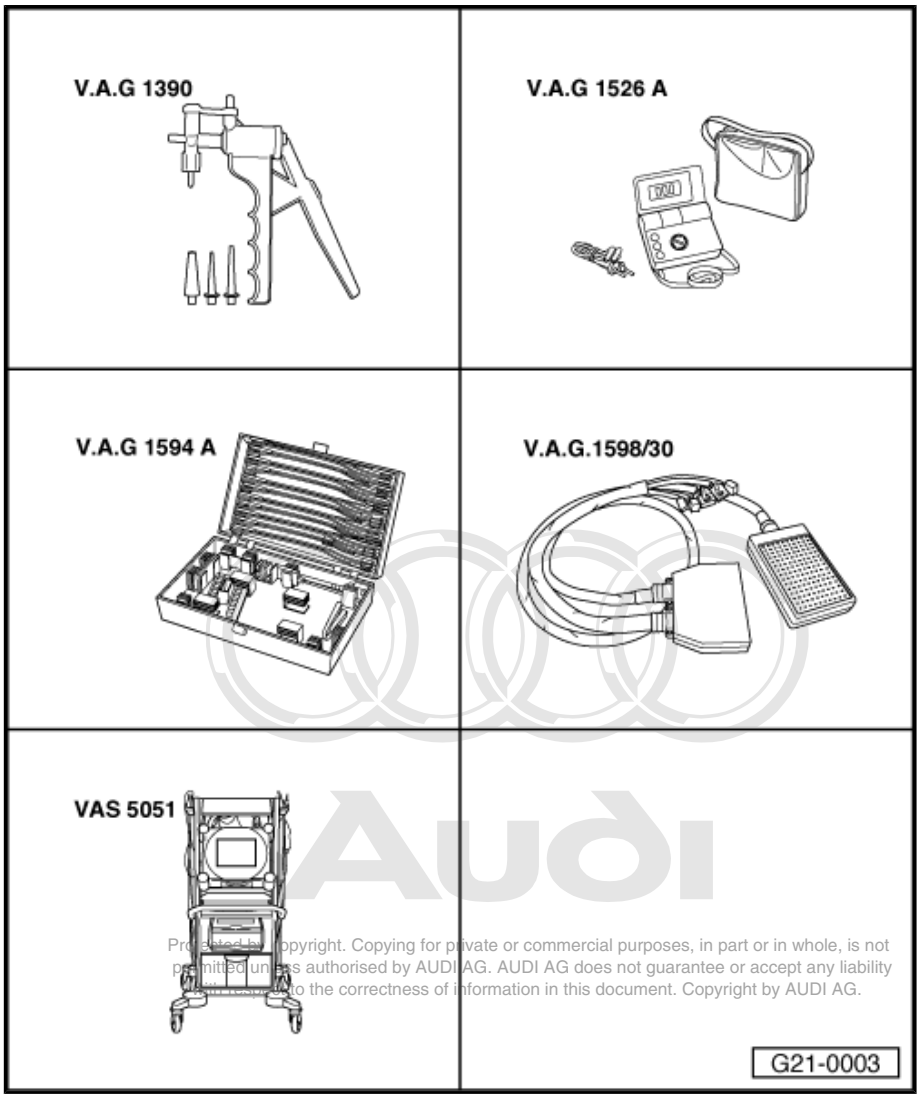

Protected by copyright. Copying for private or commercial purposes, in part or in whole, is not permitted unless authorised by AUDI AG. AUDI AG does not guarantee or accept any liability with respect to the correctness of information in this document. Copyright by AUDI AG.

Checking mechanical function

Note

The exhaust gas recirculation valves -N18- and -N213- and the corresponding wiring are monitored by the engine control unit.

– Unplug connector at valve to be checked.

1 - Exhaust gas recirculation valve 2 -N213- for cylinder bank 2 (left)

2 - Exhaust gas recirculation valve -N18- for cylinder bank 1 (right)

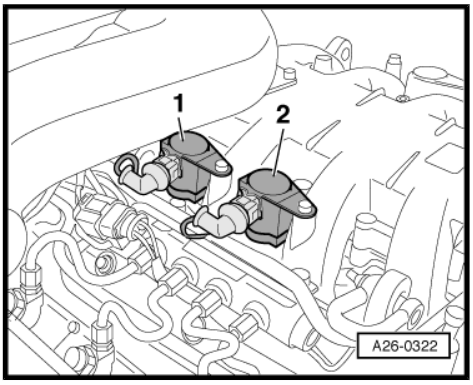

– Detach hose at vacuum connection -2-; leave hose at connection -1- attached.

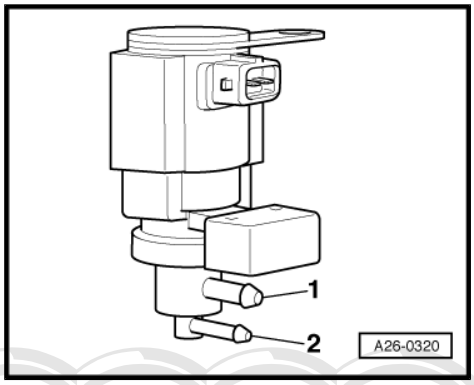

Note

Valve must be in installation position.

– Connect vacuum hand pump -V.A.G 1390- to vacuum connection -2-.

– Use test lead from adapter set to connect contact -2- of solenoid valve to battery positive.

– Connect contact -1- to earth.

• Valve must click.

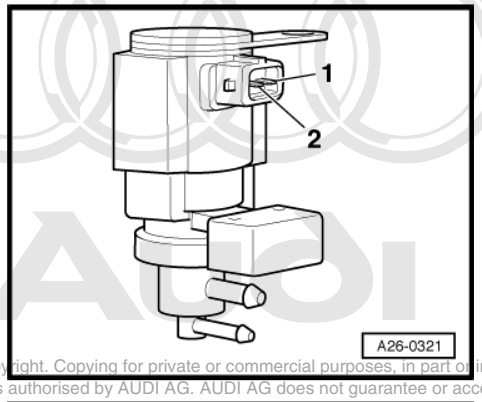

Protected by copyright. Copying for private or commercial purposes, in part or in whole, is not permitted unless authorised by AUDI AG. AUDI AG does not guarantee or accept any liability with respect to the correctness of information in this document. Copyright by AUDI AG.

– Disconnect vacuum hose at relevant mechanical exhaust gas recirculation valve -arrow-.

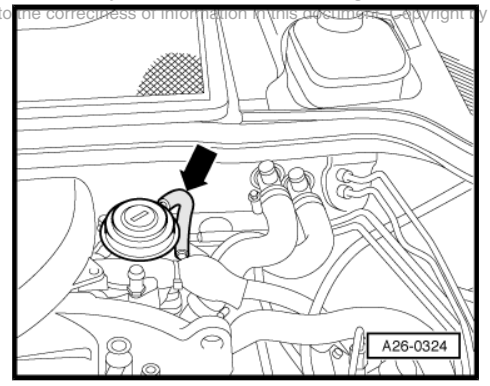

Note

♦ *Fig. shows mechanical exhaust gas recirculation valve for cylinder bank 2 (left).*

♦ *Top air pipe must be removed to disconnect hose from mechanical exhaust gas recirculation valve for cylinder bank 1 (right).*

– Use vacuum hand pump to generate vacuum.

• Vacuum is applied to disconnected vacuum hose (feel with finger).

– Detach connection between contact -1- and earth.

– Use vacuum hand pump to generate vacuum.

• Vacuum is not applied to disconnected vacuum hose (feel with finger).

If readings do not match specifications:

– Replace exhaust gas recirculation valve -N18- or -N213- .

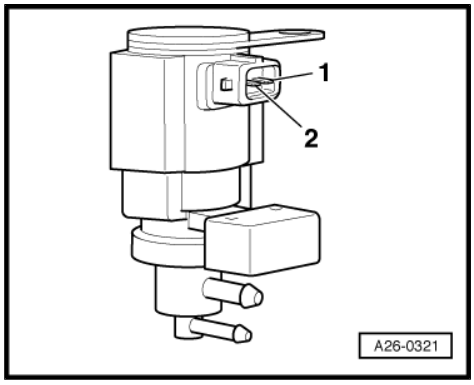

Checking power supply

- Fuse for solenoid valves OK

– Connect multimeter (voltage measuring range) to contact -2- and battery positive.

– Switch on ignition.

- Specification: approx. battery voltage

If reading does not match specification:

– Use current flow diagram to repair wiring.

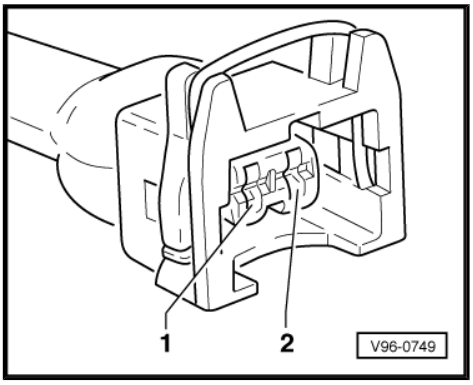

Checking internal resistance

– Unplug connector at valve to be checked.

1 - Exhaust gas recirculation valve 2 -N213- for cylinder bank 2 (left)

2 - Exhaust gas recirculation valve -N18- for cylinder bank 1 (right)

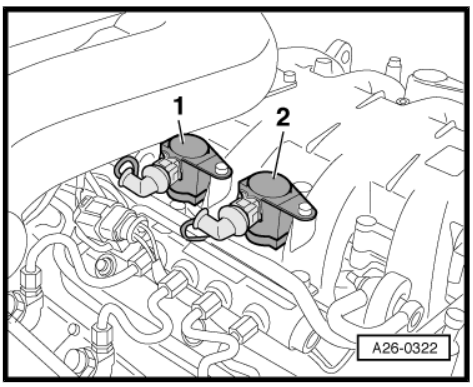

– Connect up multimeter (resistance measuring range) between contacts -1- and -2- at valve.

- Specification: 14 … 20 Ω

If reading does not match specification:

– Replace exhaust gas recirculation valve.

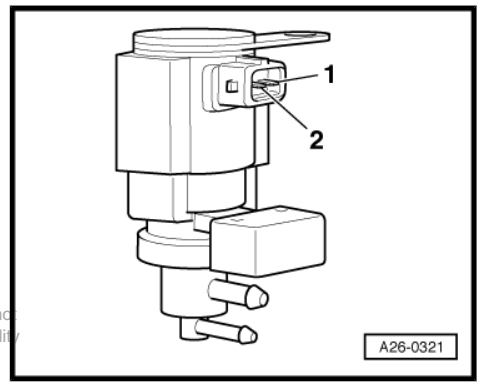

Protected by copyright. Copying for private or commercial purposes, in part or in whole, is not permitted unless authorised by AUDI AG. AUDI AG does not guarantee or accept any liability with respect to the correctness of information in this document. Copyright by AUDI AG.

Checking signal wire

– Slacken off cross-head bolts -1- at electronics box in plenum chamber.

– Unclip plenum chamber cover -2- at front at bulkhead -arrows-.

– Detach plenum chamber cover.

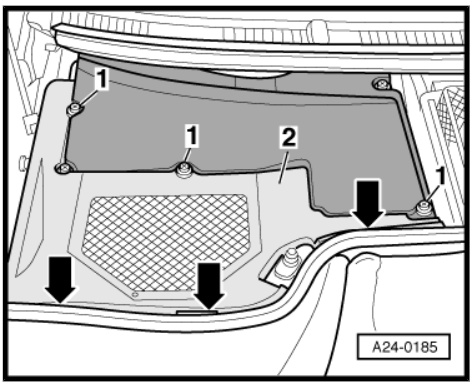

– Prise out cover -1- in scuttle panel trim and slacken off rear cross-head bolt -rear right arrow-.
– Slacken off the remaining cross-head bolts -arrows-.
– Detach cover for electronics box in plenum chamber.

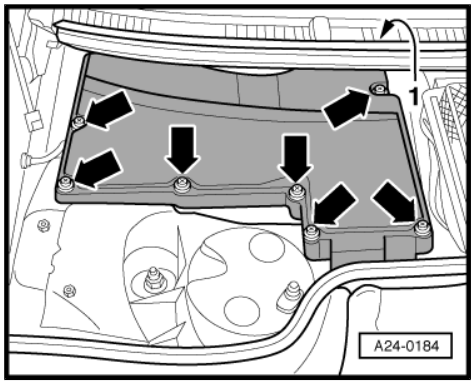

– Screw out bolt -arrow-.
– Disengage retainer.
– Detach diesel direct injection system control unit -J248- -Item 1-. Release and unplug connectors.

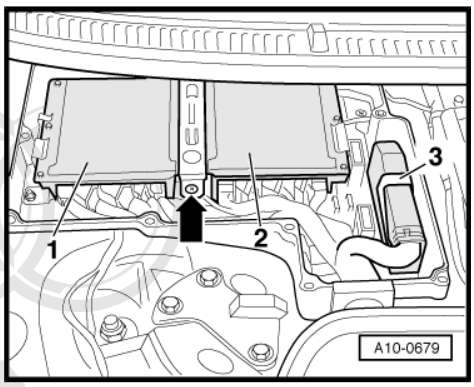

– With ignition switched off, connect test box -V.A.G 1598/30- to connectors of diesel direct injection system control unit -J248- only (not to actual control unit).

Protected by copyright. Copying for private or commercial purposes, in part or in whole, is not permitted unless authorised by AUDI AG. AUDI AG does not guarantee or accept any liability with respect to the correctness of information in this document. Copyright by AUDI AG.

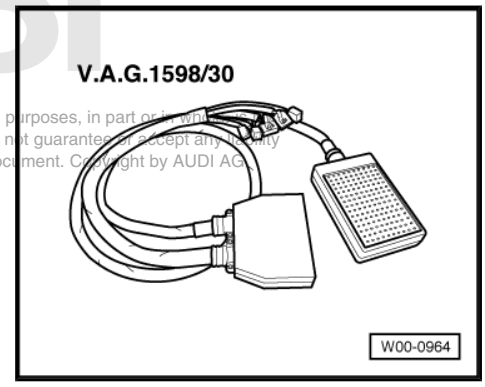

– Check for open circuit and short to earth or positive in the following wiring:

Component	Connector Contact	Test box - V.A.G 1598/30- Socket
Exhaust gas recirculation valve -N18-	-1-	2/13
Exhaust gas recirculation valve 2 - N213-	-1-	3/23

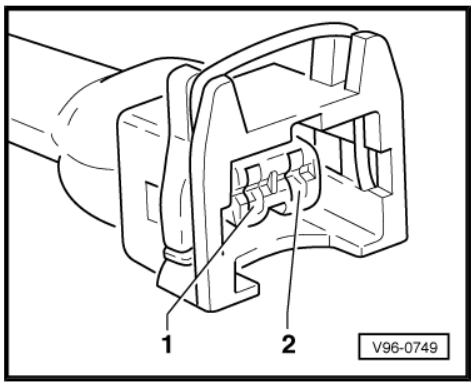

– Repair wiring if necessary.

If no fault is found in wire:

– Replace engine control unit.

2.4 Checking mechanical exhaust gas recirculation valve

Note

- *The 8-cylinder TDI engine has one mechanical exhaust gas recirculation valve each for the left and right cylinder banks.*
- *The following check must be performed consecutively at both valves.*

Special tools and workshop equipment required

- Vacuum hand pump with accessories -V.A.G 1390-

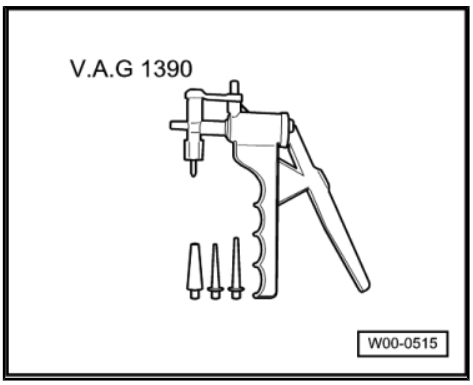

Test condition

- Engine stopped

Test sequence

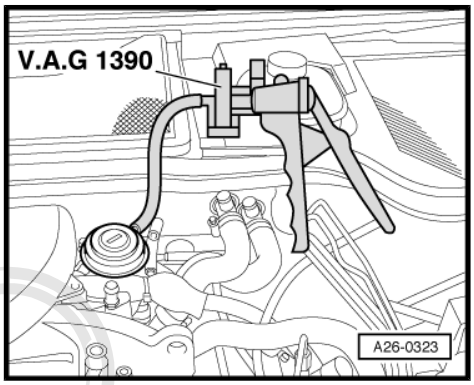

Note

The following check is only to be performed with the engine stopped. Damage could occur if the engine was running.

– Disconnect vacuum hose at mechanical exhaust gas recirculation valve.

– Connect vacuum hand pump -V.A.G 1390- to valve.

– Use vacuum hand pump to generate vacuum.

– Detach hose of vacuum hand pump from exhaust gas recirculation valve.

- Closing of valve must be distinctly audible.

Exhaust gas recirculation valve is defective if no valve closing noise is audible.

– Replace mechanical exhaust gas recirculation valve.

Note

Protected by copyright. Copying for private or commercial purposes, in part or in whole, is not permitted unless authorised by AUDI AG. AUDI AG does not guarantee or accept any liability with respect to the correctness of information in this document. Copyright by AUDI AG.

- *Fig. shows mechanical exhaust gas recirculation valve for left cylinder bank.*
- *Top air pipe must be removed for checking mechanical exhaust gas recirculation valve for right cylinder bank.*

2.5 Exploded view of exhaust gas recirculation system

Note

The illustration shows the exhaust gas recirculation system for the left cylinder bank.

1 - 10 Nm

2 - Gasket
- ❑ Replace

3 - Gasket
- ❑ Replace

4 - Intake manifold

5 - Mechanical exhaust gas recirculation valve
- ❑ Checking ⇒ page 277
- ❑ Removing and installing ⇒ page 279

6 - 22 Nm

7 - Vacuum hose
- ❑ To exhaust gas recirculation valve -N18- or -N213-

8 - 22 Nm

9 - Connecting pipe
- ❑ To mechanical exhaust gas recirculation valve

10 - Gasket
- ❑ Replace

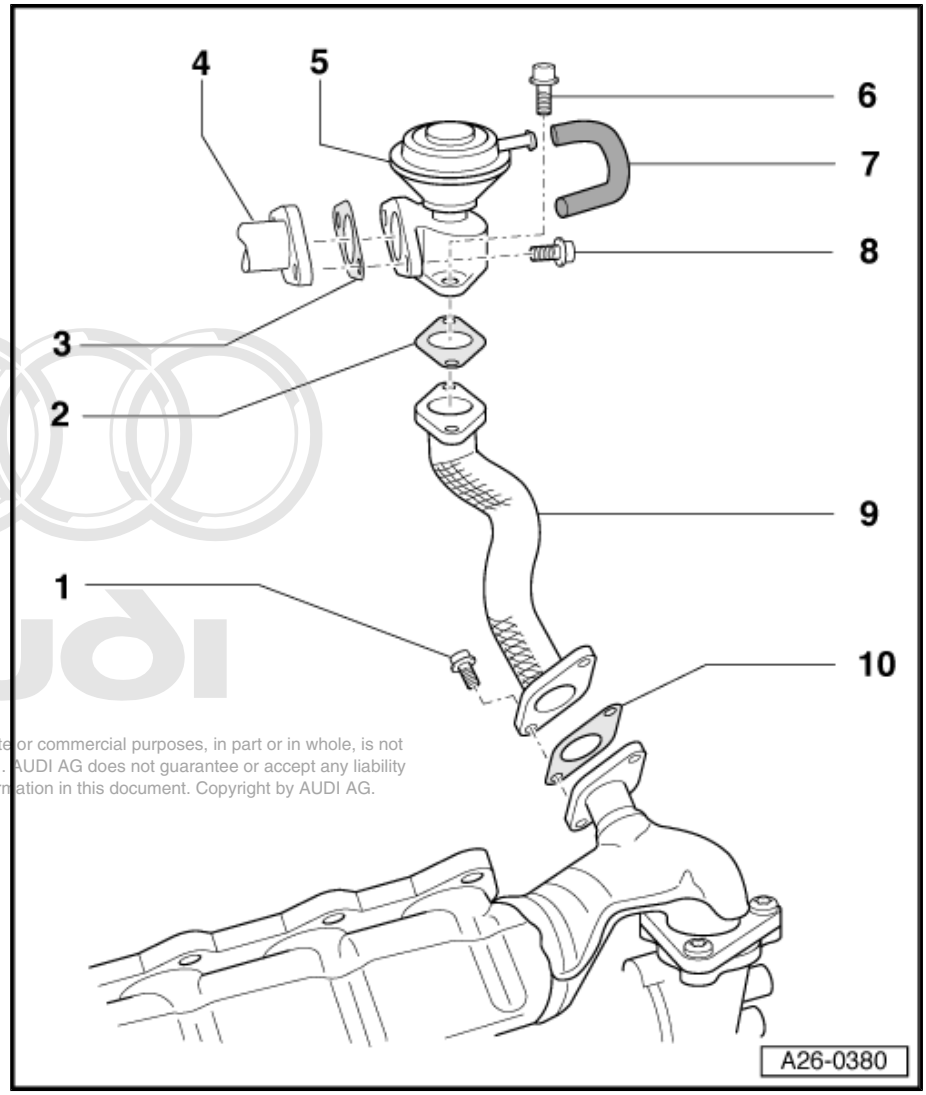

Protected by copyright. Copying for private or commercial purposes, in part or in whole, is not permitted unless authorised by AUDI AG. AUDI AG does not guarantee or accept any liability with respect to the correctness of information in this document. Copyright by AUDI AG.

2.6 Removing and installing mechanical exhaust gas recirculation valves

Removing

- Engine in position

– Detach engine cover -arrows-.

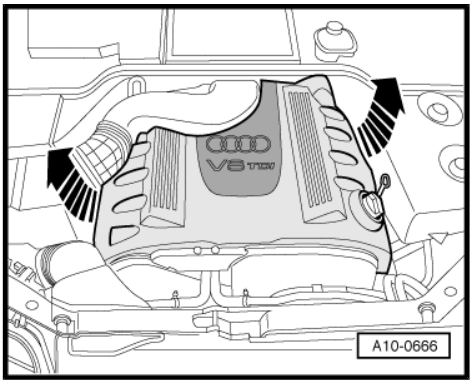

– Remove top air pipe with air hose -arrows-.

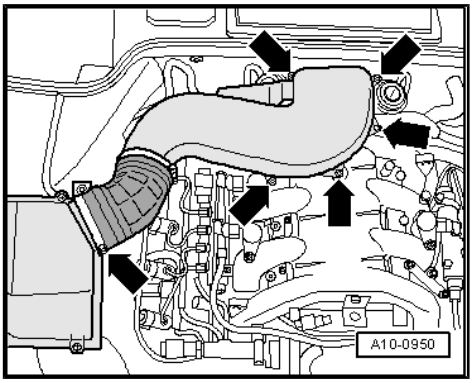

Note

Seal off inlet connections with clean cloths.

– Disconnect vacuum hoses at mechanical exhaust gas recirculation valves.

– Screw out bolts -arrows- on left and right at mechanical exhaust gas recirculation valves.

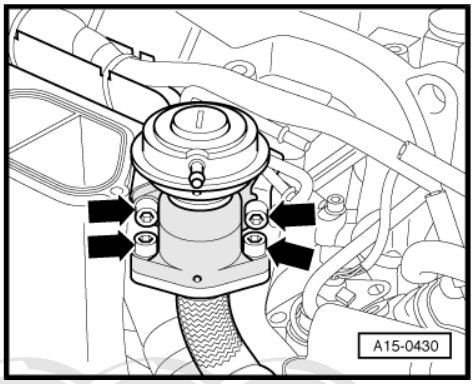

Note

Fig. shows right exhaust gas recirculation valve.

– Detach mechanical exhaust gas recirculation valves.

Installing

Install in reverse order; paying attention to the following:

Note

Replace gaskets.

Tightening torques

Component		Nm
Mechanical exhaust gas recirculation valve to intake manifold or connecting pipe		22
Top air pipe to	Rear air pipe	10
	Cylinder head	10
Clamps for air hoses		3,5

Protected by copyright. Copying for private or commercial purposes, in part or in whole, is not permitted unless authorised by AUDI AG. AUDI AG does not guarantee or accept any liability with respect to the correctness of information in this document. Copyright by AUDI AG.