Audi A8 1994 ➤

Running Gear FWD and 4WD

Edition 12.2001

List of Workshop Manual Repair GroupsList of Workshop Manual Repair GroupsList of Workshop Manual Repair Groups

Audi A8 1994 ➤

Running Gear FWD and 4WD

Repair Group

00 -

40 - Front suspension

42 - Rear suspension

43 - Self levelling suspension

44 - Wheels, Tyres, Wheel alignment

48 - Steering

Technical information should always be available to the foremen and mechanics, because their careful and constant adherence to the instructions is essential to ensure vehicle road-worthiness and safety. In addition, the normal basic safety precautions for working on motor vehicles must, as a matter of course, be observed.

Contents

00 -

1 - Technical data

1.1 - Technical data

1.2 - Running Gear

Front axle	Four-link axle, independent suspension, anti-roll bar, double tube gas-filled shock absorber and coil spring, tension stop spring, subframe, guide link with hydraulically damped bush

Rear axle	Independent suspension with dual transverse links and anti-roll bar

		4WD
Wheel base (1BA)	mm	2878
Track width, front/rear, 6-cyl	mm	1597/1586
Track width, front/rear, 8-cyl	mm	1591/1580

1.3 - Steering

Steering box	Power-assisted, maintenance-free rack-and-pinion steering
Turning circle diameter	approx. 10.5 m

2 - Environmentally-friendly disposal of fluid-filled components

2.1 - Environmentally-friendly disposal of fluid-filled components

2.2 - Releasing gas from front gas-filled shock absorber

A - Releasing gas by drilling

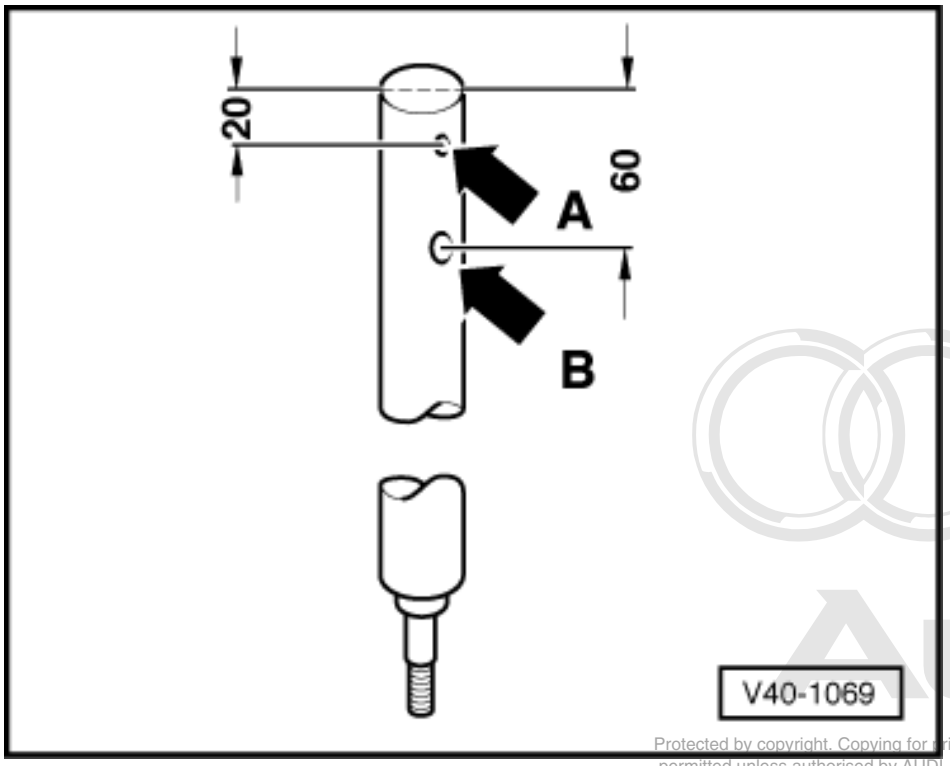

- -> Clamp the gas-filled shock absorber vertically in the vice with the piston rod pointing downwards.

Important Safety goggles must be worn when drilling.

- Drill a hole ø 3 mm -arrow A- through the outer tube of the shock absorber.

Note:

Gas will escape when drilling.

- Continue drilling until the inner tube has been drilled through (to a depth of approx. 25 mm).
- Drill a second hole ø 6 mm -arrow B-through the outer and inner tubes of the shock absorber.
- Hold the shock absorber over a drip tray and move the piston rod backwards and forwards over the entire stroke several times until no more fluid escapes.

B - Opening with pipe cutter

Important Safety goggles must be worn during drilling or sawing.

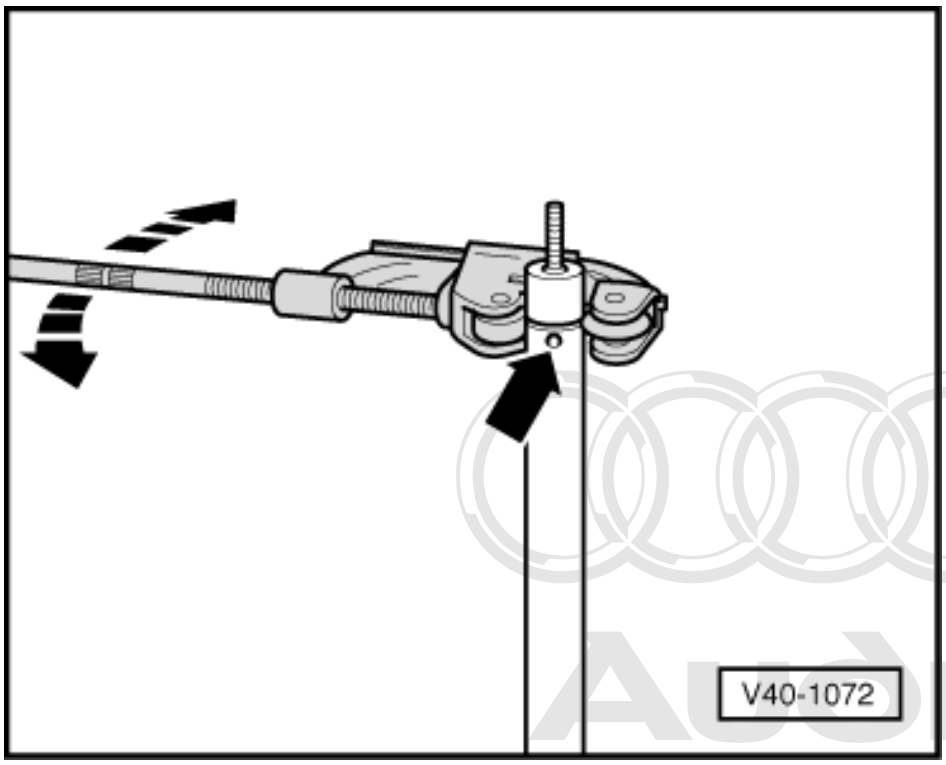

- -> Drill a hole ø 3 mm -arrow- through the outer tube of the shock absorber or saw through the tube wall.

Note:

Gas will escape when drilling or sawing.

- Attach a pipe cutter (e.g. Stahlwille Express 150/3) as shown in the illustration and cut through the outer tube.
- Pull the piston rod upwards, thereby firmly holding the inner tube with pliers and push it downwards such that it remains in the outer tube when the piston rod is slowly pulled upwards.
- Remove the piston rod from the inner tube.
- Drain the shock absorber tube.

2.3 - Releasing gas in rear gas-filled shock absorber

A - Releasing gas by drilling

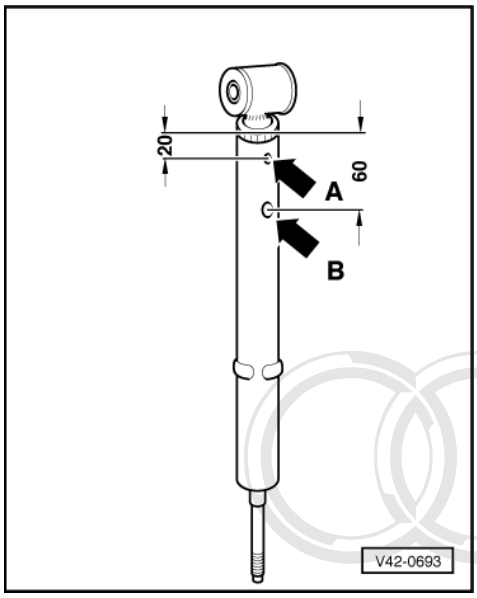

- -> Clamp the gas-filled shock absorber vertically in the vice with the piston rod pointing downwards.

Important Safety goggles must be worn when drilling.

- Drill a hole ø 3 mm -arrow A- through the outer tube of the shock absorber.

Note:

Gas will escape when drilling.

- Continue drilling until the inner tube has been drilled through (to a depth of approx. 25 mm).
- Drill a second hole ø 6 mm -arrow B-through the outer and inner tubes of the shock absorber.
- Hold the shock absorber over a drip tray and move the piston rod backwards and forwards over the entire stroke several times until no more fluid escapes.

B - Opening with pipe cutter

Important Safety goggles must be worn during drilling or sawing.

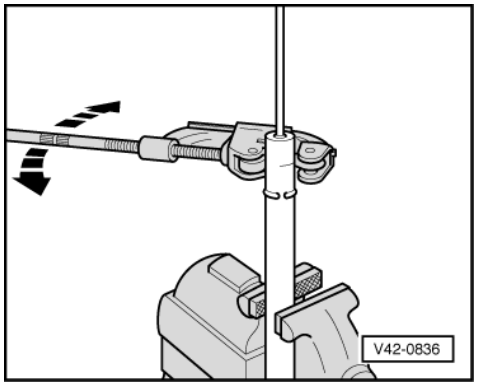

- -> Drill a hole ø 3 mm -arrow- through the outer tube of the shock absorber or saw through the tube wall.

Note:

Gas will escape when drilling or sawing.

- Attach a pipe cutter (e.g. Stahlwille Express 150/3) as shown in the illustration and cut through the outer tube.
- Pull the piston rod upwards, thereby firmly holding the inner tube with pliers and push it downwards such that it remains in the outer tube when the piston rod is slowly pulled upwards.
- Remove the piston rod from the inner tube.
- Drain the shock absorber tube.

2.4 - Emptying steering damper

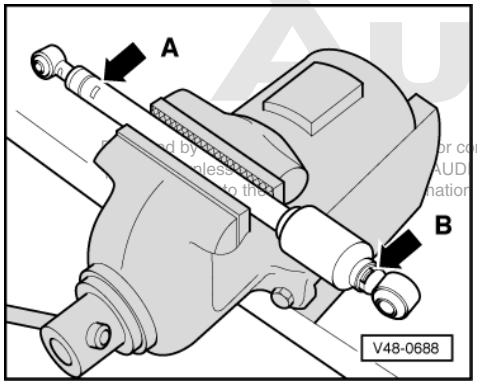

- -> Horizontally clamp the steering damper into vice.

Important Goggles must be worn during sawing.

- Saw the steering damper at the points marked.
  - Arrow A = 30 mm from end of tube
  - Arrow B = 10 mm from end of tube
- Hold the shock absorber over a drip tray and move the piston rod backwards and forwards over the entire stroke several times until no more fluid escapes.

2.5 - Draining power-assisted steering box

Note:

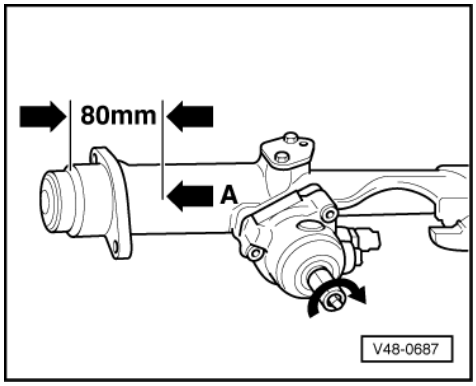

To drain the steering box, the room temperature must be at least 20°C.

- -> Turn the steering pinion in the direction of arrow to stop.

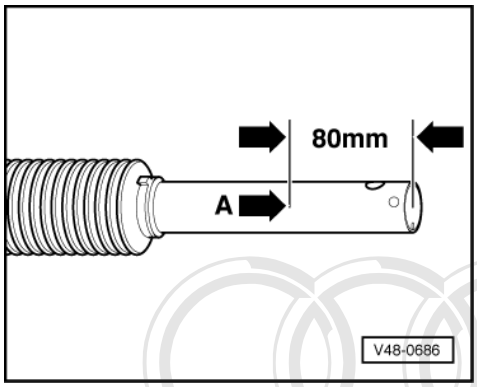

- -> Clamp the steering box in the vice horizontally.
- Place drip tray under the steering box.
- Saw off the steering box at the point indicated by -arrow A-.
- Hold the detached steering box over the drip tray and allow the hydraulic fluid to escape. If necessary, turn the steering pinion to the opposite stop.

3 - Checking shock absorbers

3.1 - Checking shock absorbers

3.2 - Leaks in shock absorbers

Complaints are often received regarding leaks in shock absorbers which, as a result, are replaced. Inspections on the test stand and in the vehicle have proven that replacement was not justified for a large number of shock absorbers that were the subject of complaints.

Slight discharge of fluid ("sweating") at the piston rod seal is no reason for replacing a shock absorber. A shock absorber with slight discharge of fluid is OK under the following conditions:

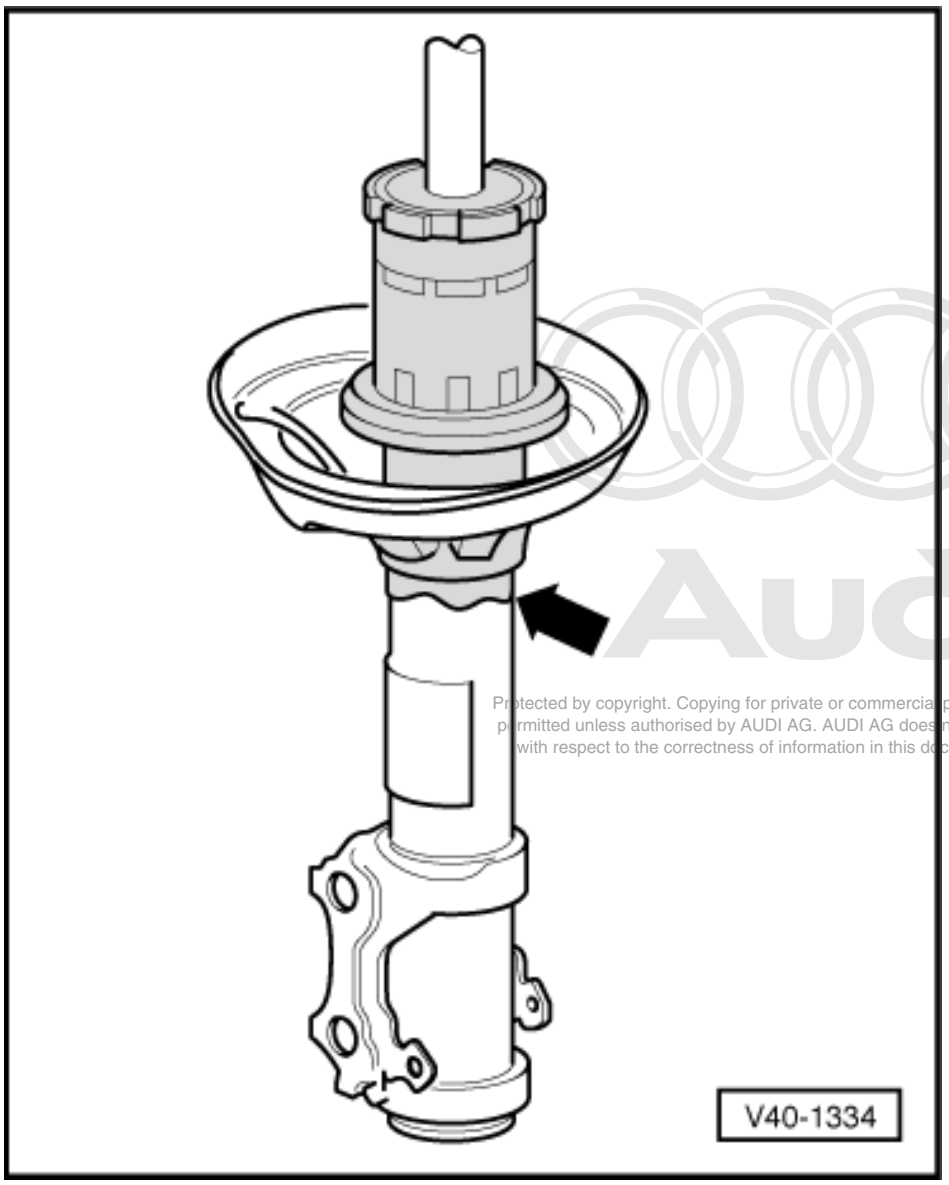

- -> Fluid discharge (shaded area in the illustration) is visible, but dull, matte and possibly dry from dust.
- Fluid discharge extends from the upper shock absorber seal (piston rod seal ring) as far as the lower spring plate -arrow-.

Note:

Slight fluid discharge is advantageous since it ensures that the piston rod seal ring is lubricated and the service life is thus increased. This applies to shock absorbers on the front and rear axles.

3.3 - Noise from shock absorbers

Complaints are often received regarding thumping noises in shock absorbers which, as a result, are replaced. Inspections on the test stand and in the vehicle have proven that in the case of approx. 70% shock absorbers which were the subject of complaints, there was no actual defect and replacement was not justified.

Proceed as follows in the case of complaints which are interpreted as knocking or creaking noises.

- Establish with the customer where, when and how the noises are emitted by means of a test drive, if possible on a dry, irregular roadway.

- Proceed according to the fault finding table "noise in the front/rear of the vehicle"

=> Binder "Fault finding. Running gear"

Note:

Only in very rare instances is the shock absorber the reason for the noises.

3.4 - Checking shock absorbers, removed

Defective shock absorbers are noticeable during travel due to loud knocking noises, as a result of wheel hopping, particularly on poor road surfaces. In addition, they can be distinguished externally by the considerable loss of fluid.

Note:

Shock absorbers are maintenance-free, the shock absorber fluid cannot be topped up.

A removed shock absorber can be checked manually as follows:

- Compress shock absorber by hand.
  - The piston rod must move evenly and smoothly over the entire stroke.
- Release the piston rod.
  - In shock absorbers with sufficient gas pressure, the piston rod automatically returns to its initial position.

Notes:

- If this is not the case, the shock absorber need not necessarily be replaced. As long as no great amount of fluid has been lost, the function corresponds to that of a conventional shock absorber.
- The damping function is also completely unaffected provided that there has been no considerable loss of fluid. However, the noise characteristics may deteriorate.

3.5 - Checking shock absorbers on shock tester

Use the shock tester (shock absorber test unit) to check shock absorbers when installed. The damping effect can be assessed through the movement of the indicator or print-out.

Special tools and workshop equipment required

- Boge shock tester

  or

- Sachs shock tester V.A.G 1975

  or

- Maha damper tester VAS 1990

Test requirements:

- Temperature +10...+40 °C
- Driver in vehicle.
- Tyre pressures OK.
- Vehicle is centred and driven straight onto the wheel test plates.
- Wheels in straight-ahead position.
- Handbrake not applied, brake pedal not actuated.

Limit values

The condition of the shock absorbers can be evaluated as follows:

- Damping effect sufficient

  or

- Damping effect insufficient

Notes:

- Intermediate values for a lessened damping performance cannot be read out.
- Prediction of service life is not permitted.
- Measured values obtained through working of the spring travel end stops are falsified.

The following values are only valid for the previously mentioned test rigs. If the given values are exceeded the shock absorber is weakened by more than 50% - the exchange is justified.

Front axle:

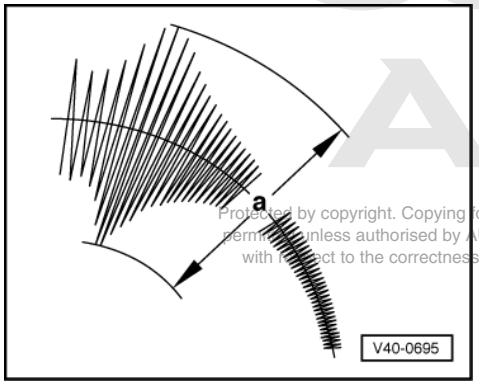

- -> a = greater than 60: Damping effect insufficient
- a = smaller than 60: Damping effect sufficient

Rear axle without self-levelling:

- a = greater than 60: Damping effect insufficient
- a = smaller than 60: Damping effect sufficient

Rear axle with self-levelling:

- a = greater than 70: Damping effect insufficient
- a = smaller than 70: Damping effect sufficient

4 - Fastening subframe to body

4.1 - Fastening subframe to body

4.2 - Repairing damaged threads

Damaged threads can be repaired with wire inserts (Heli-Coil).
The wire inserts must have a zinc nickel coating.

Refer to component overviews for information on which threads can be repaired.

Shavings which remain in the body must be immersed in wax.

5 - General information

5.1 - General information

If the vehicle requires wheel alignment, the bolts and nuts that have to be loosened for adjustment purposes are only tightened to torque. After performing the wheel alignment/adjustment, the bolts and nuts must be tightened with the specified further turn angle.

Important: All bolts and nuts must be tightened as specified for vehicles used on public roads.

40 - Front suspension

1 - Contact corrosion

1.1 - Contact corrosion

Contact corrosion can occur if non-approved fasteners are used (bolts, nuts, washers etc.).

For this reason, only fastening components which have been subjected to special surface treatment (Dachromet) are used in installation. These components can be identified by their greenish surface finish.

In addition, all rubber and plastic parts and all adhesives are made of non-electrically conductive materials.

If you are not sure of the reusability of parts, always fit new parts.

Please note the following:

Always use genuine service replacement parts.

These have been tested and are compatible with aluminium.

Accessories must be approved by AUDI AG.

Damage resulting from contact corrosion is not covered by the warranty.

2 - Layout of front axle components

2.1 - Layout of front axle components

General notes:

Welding and straightening operations are not permitted on load-bearing suspension components or wheel-controlling components.

Do not attempt to move a vehicle without a drive shaft fitted as this will result in wheel bearing damage. If the vehicle does have to be moved, always note the following points:

- Fit an outer joint in place of the drive shaft.
- Tighten the outer joint to 50 Nm.

Bonded rubber bushes can only be twisted to a limited extent. The bolted connections on the suspension links should therefore only be tightened once the vehicle is standing on the ground.

Retrofitting of a sports running gear is described in the "Installation instructions for sports running gear".

=> Complete "Audi installation instructions" binder

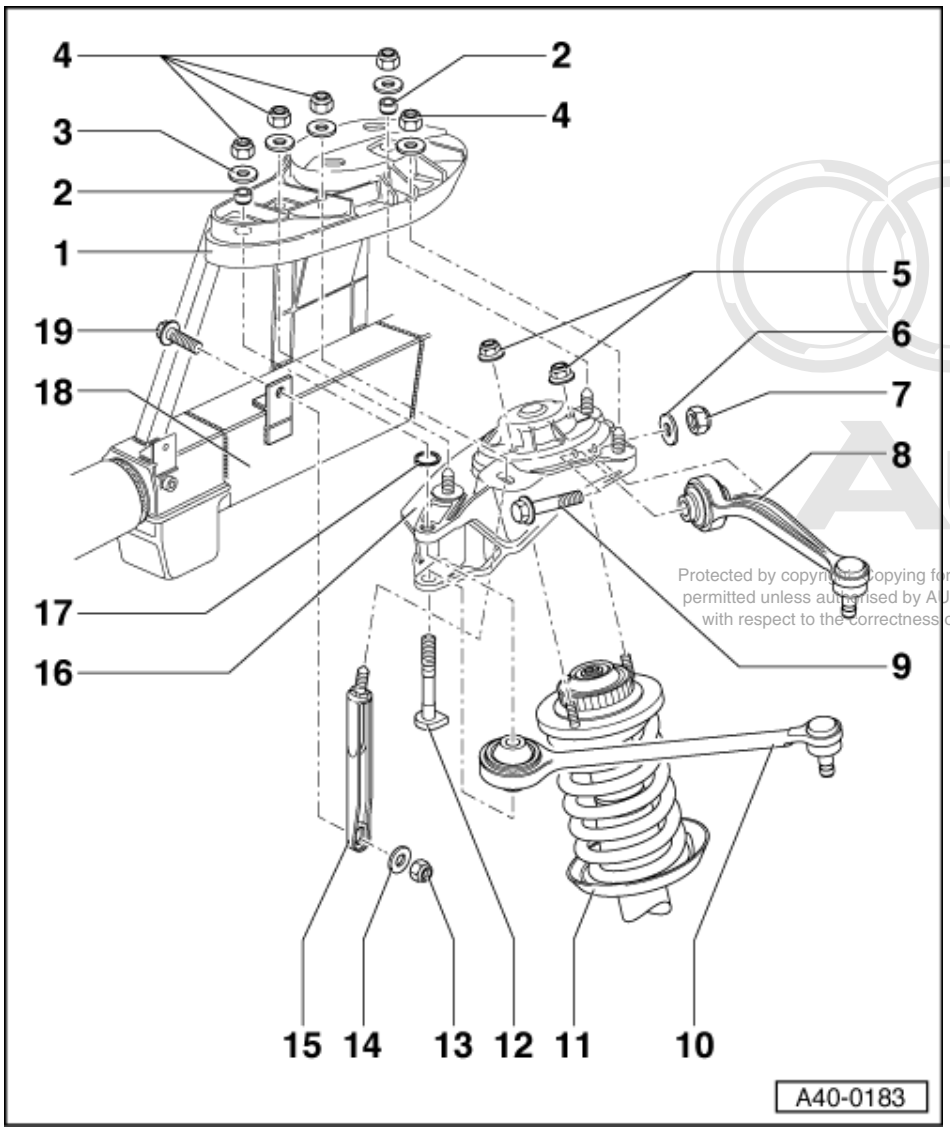

1 Mounting bracket adapter/body
2 Guide sleeve
3 Washer
4 Self-locking nut, 100 Nm
- Always replace

5 Self-locking nut, 20 Nm
- Always replace

6 Washer
7 Self-locking nut
- Always replace
- Tighten to 50 Nm and then give a further 90° turn

8 Upper rear link
- Replacing bushes => Page 61
- Bushes must be replaced on both sides of the vehicle up to vehicle identification number 4DZ XN 5000

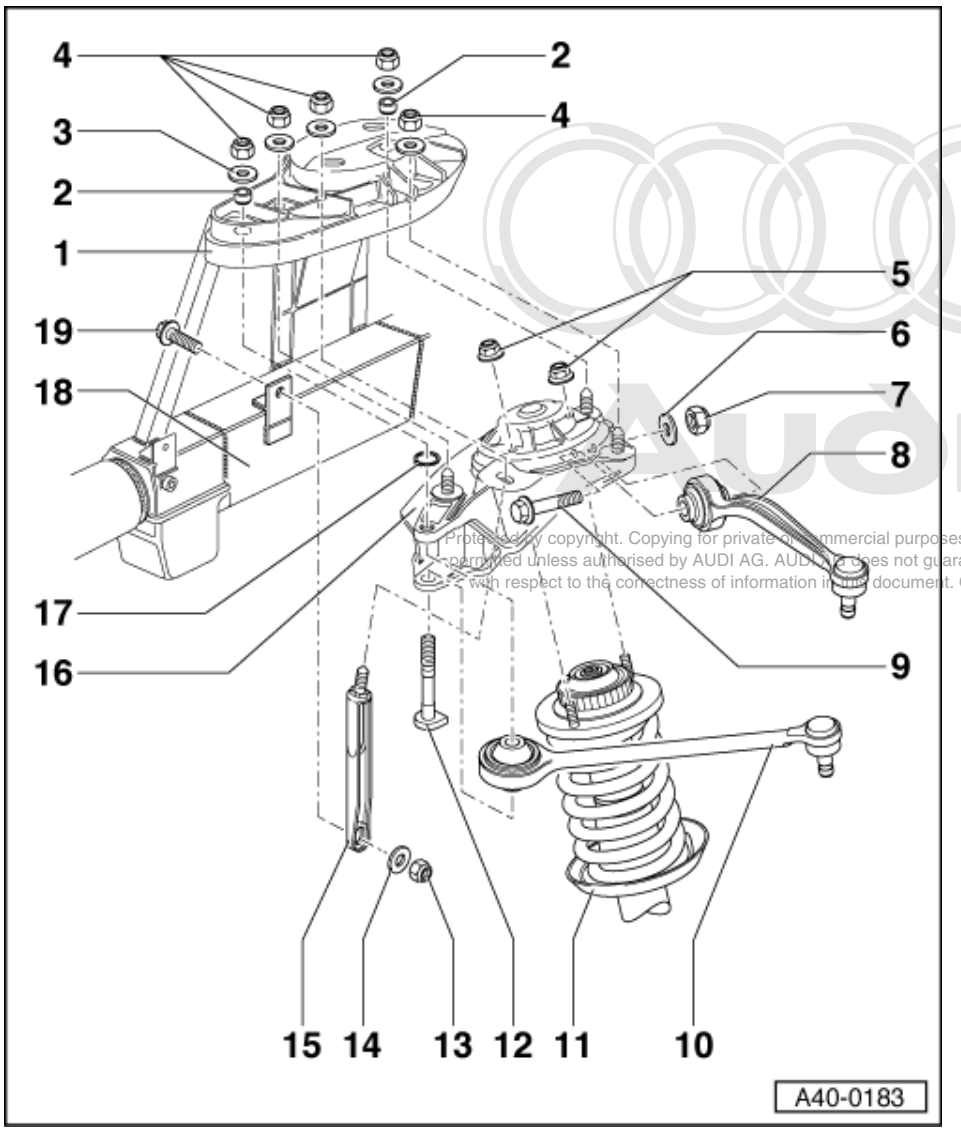

9 Hexagon bolt
- Always replace

10 Upper front link
- Available as a steel or aluminium version
- Removing for servicing mounting bracket =>Page 55
- Replacing bushes => Page 60
- Bushes must be replaced on both sides of the vehicle up to vehicle identification number 4DZ XN 5000

If steel links are to be replaced using aluminium links, then replacement of the following components is necessary:

- Wheel housing liners
- Coolant expansion tank

Note Parts Catalogue.

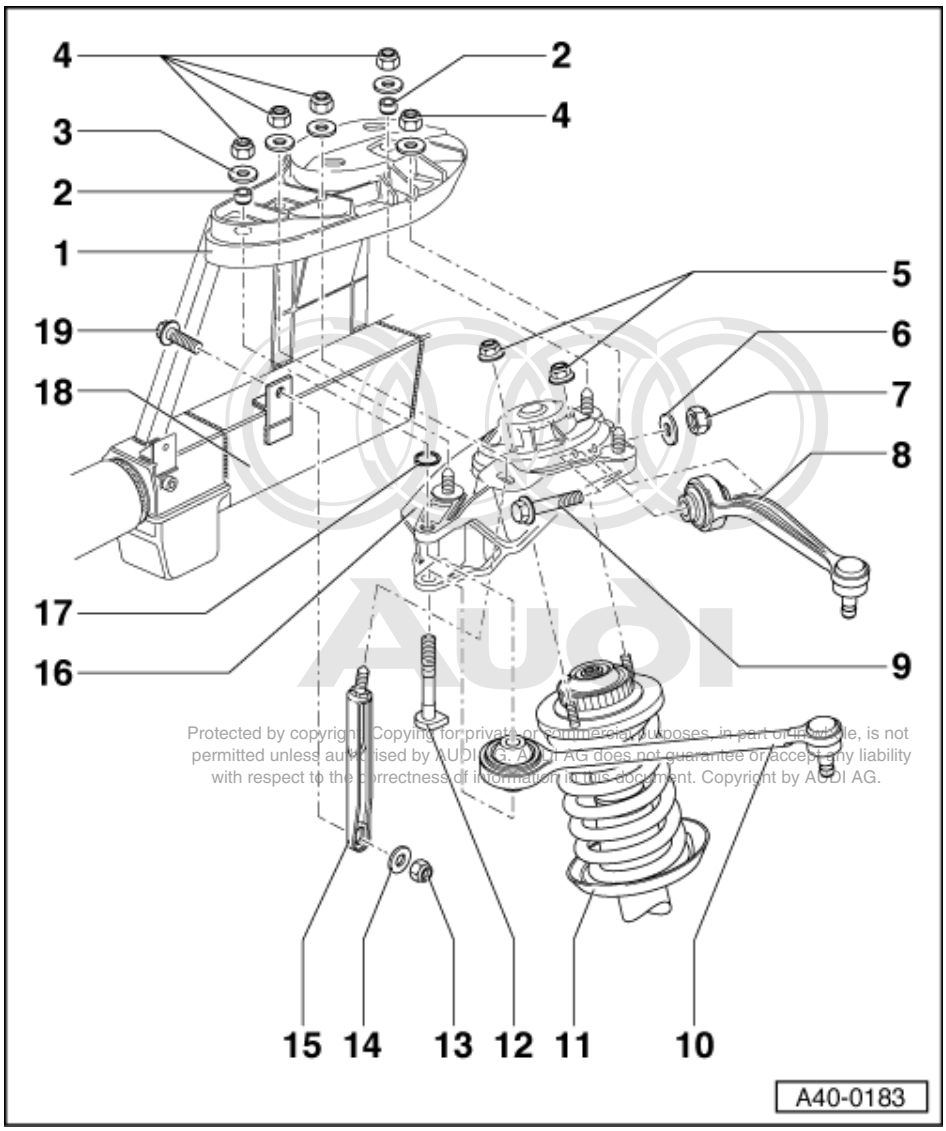

11 Suspension strut

- For vehicles with headlight range control, refer to =>Page 69
- Note different running gear versions; see vehicle data sticker => Page 216
- Removing and installing =>Page 27
- Servicing => Page 29

12 Bolt

13 Self-locking nut, 100 Nm

- Always replace => Refer to the note regarding Item 15

14 Washer

=> Refer to the note regarding Item 15

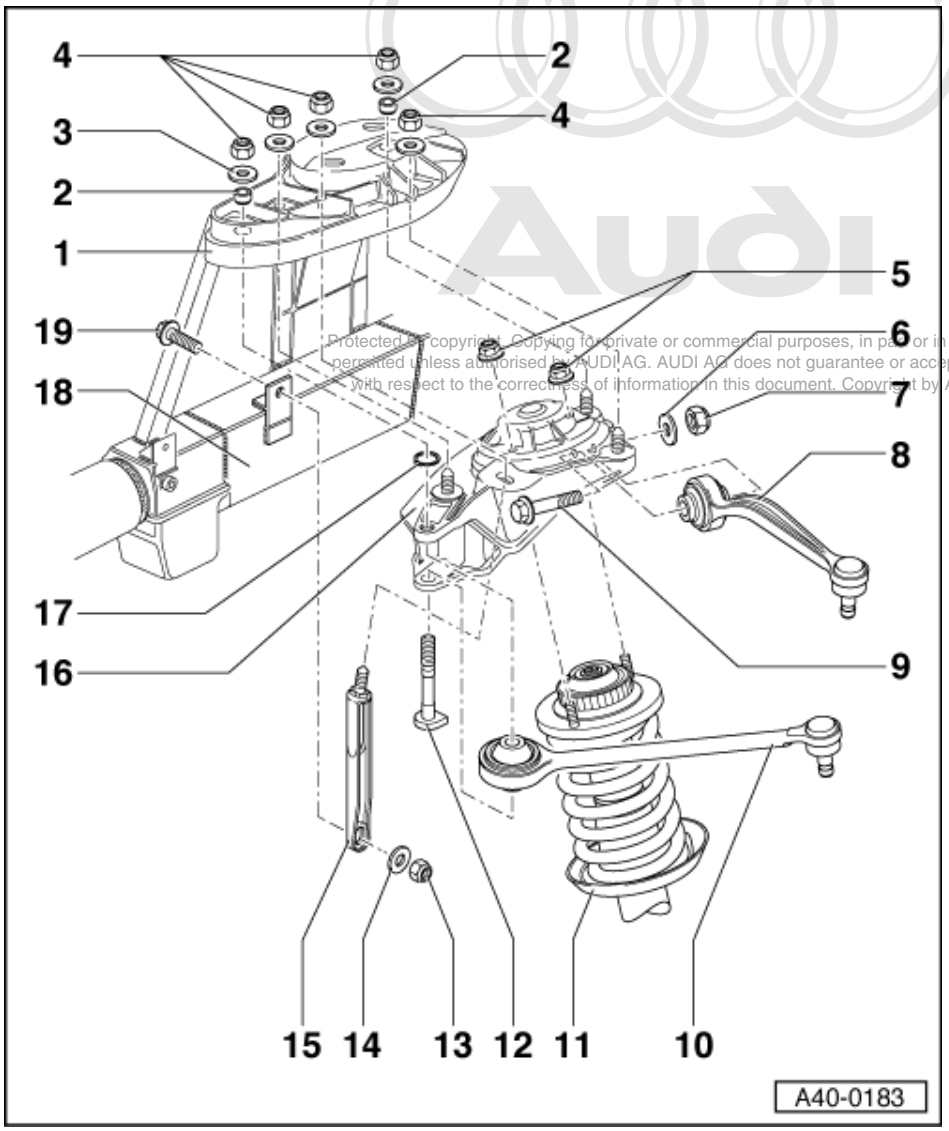

15 Brace

Note:

From VIN 4DZ TN 006 420 to 4DZ XN 5 000, the brace is not installed.

- Bolt the mounting bracket to the body in place of the brace => Fig. 1

Use the following components to do so:

- Bolt, => Item 19
- Washer, => Item 14
- Nut, => Item 13

Installation position of bolt: From bottom to top.

Nut tightening torque: 100 Nm

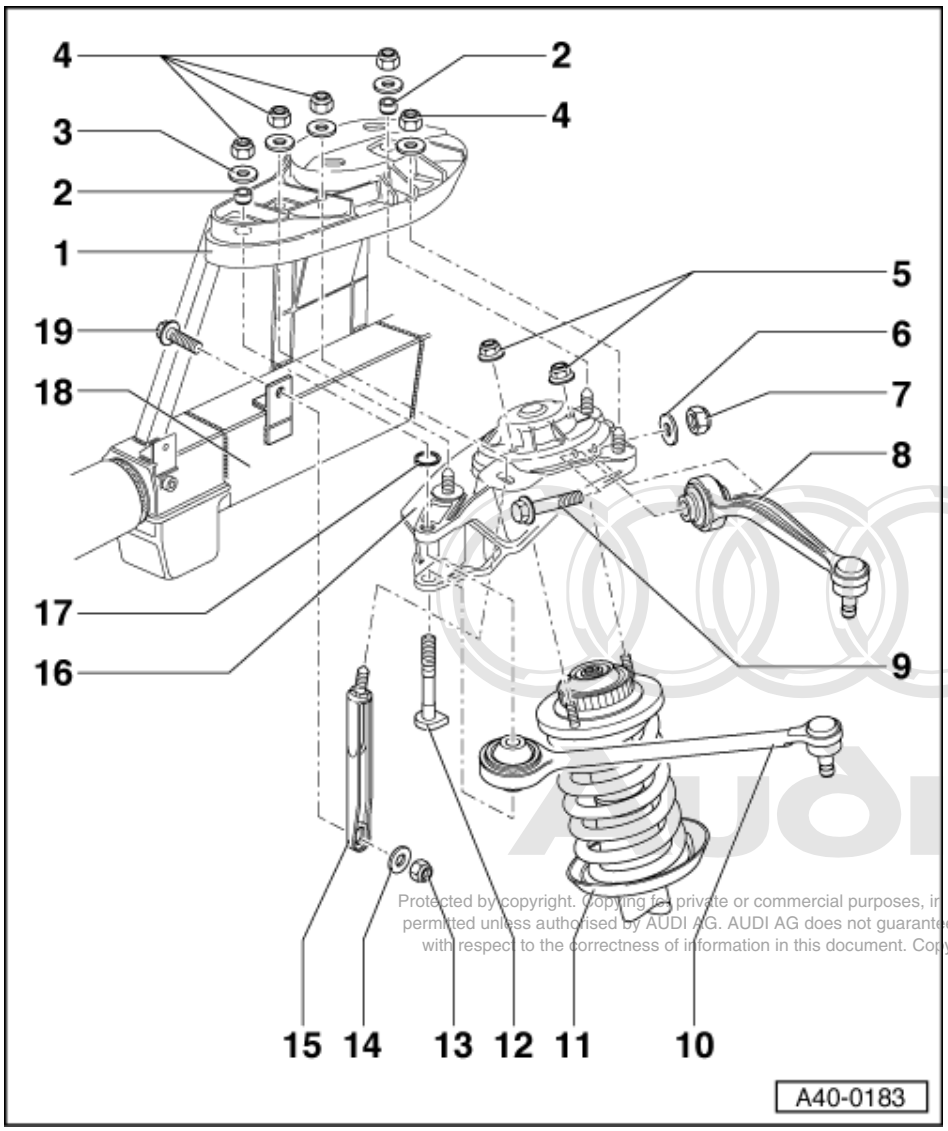

16 Bracket

- Removing and installing
  =>Page 55

17 Circlip 12 *1

- Circlip used as an assembly aid during production, does not need to be reinstalled for repair

18 Front longitudinal member

19 Hexagon bolt

=> Refer to the note regarding Item 15

20 Hexagon bolt

21 Combi bolt, 7 Nm

- For setting toe constant "S"
- A protective cap is pushed in on the right side for this purpose

22 Square head bolt

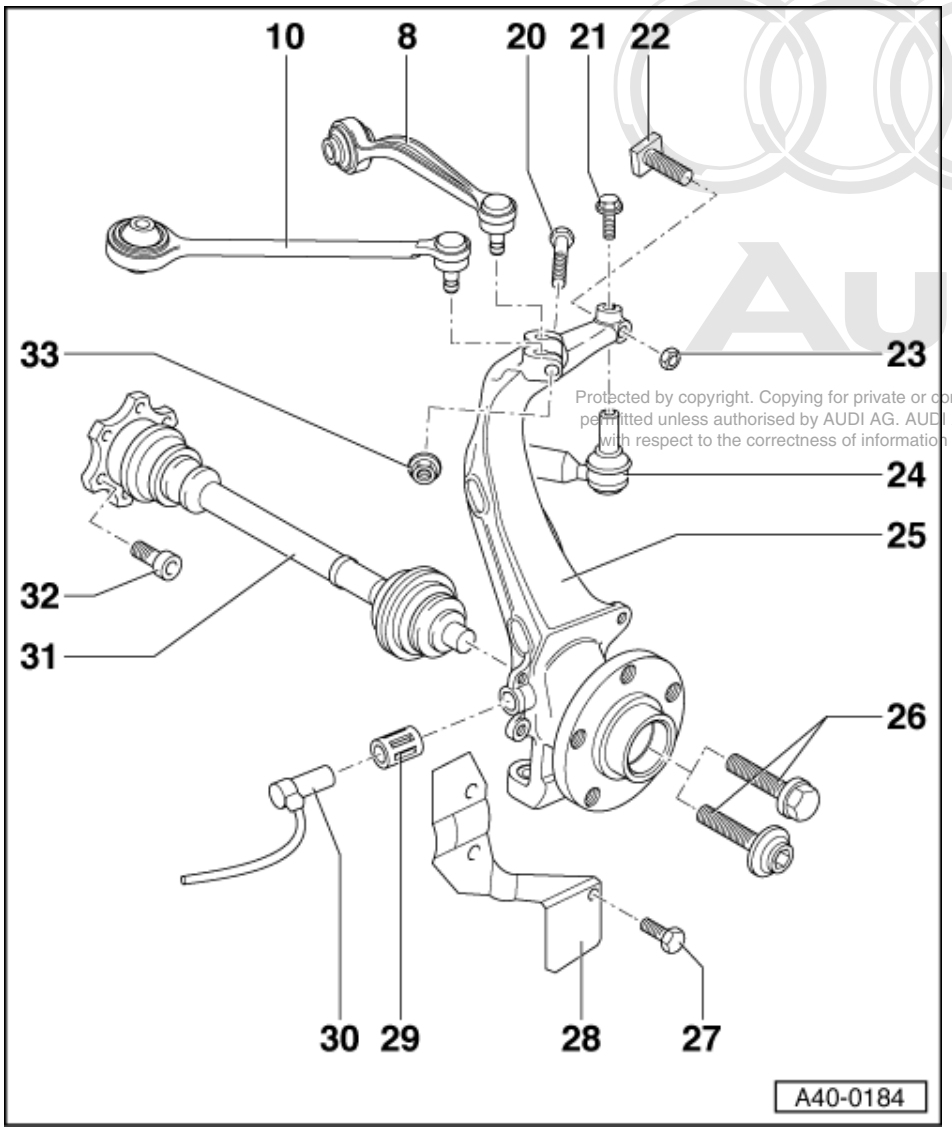

23 Self-locking nut

- Always replace
- 50 Nm

24 Track rod end

- Removing and installing =>Page 309
- Adjusting track => Page 226

25 Wheel bearing housing

- Type with and without groove for ring at track rod end - Aftersales only delivers new version
- For vehicles with headlight range control, refer to =>Page 70
- Removing and installing with wheel bearing pressed in=>Page 35
- Servicing with wheel bearing pressed in => Page 47
- Removing and installing with wheel bearing screwed in=>Page 42
- Servicing with wheel bearing screwed in => Page 39

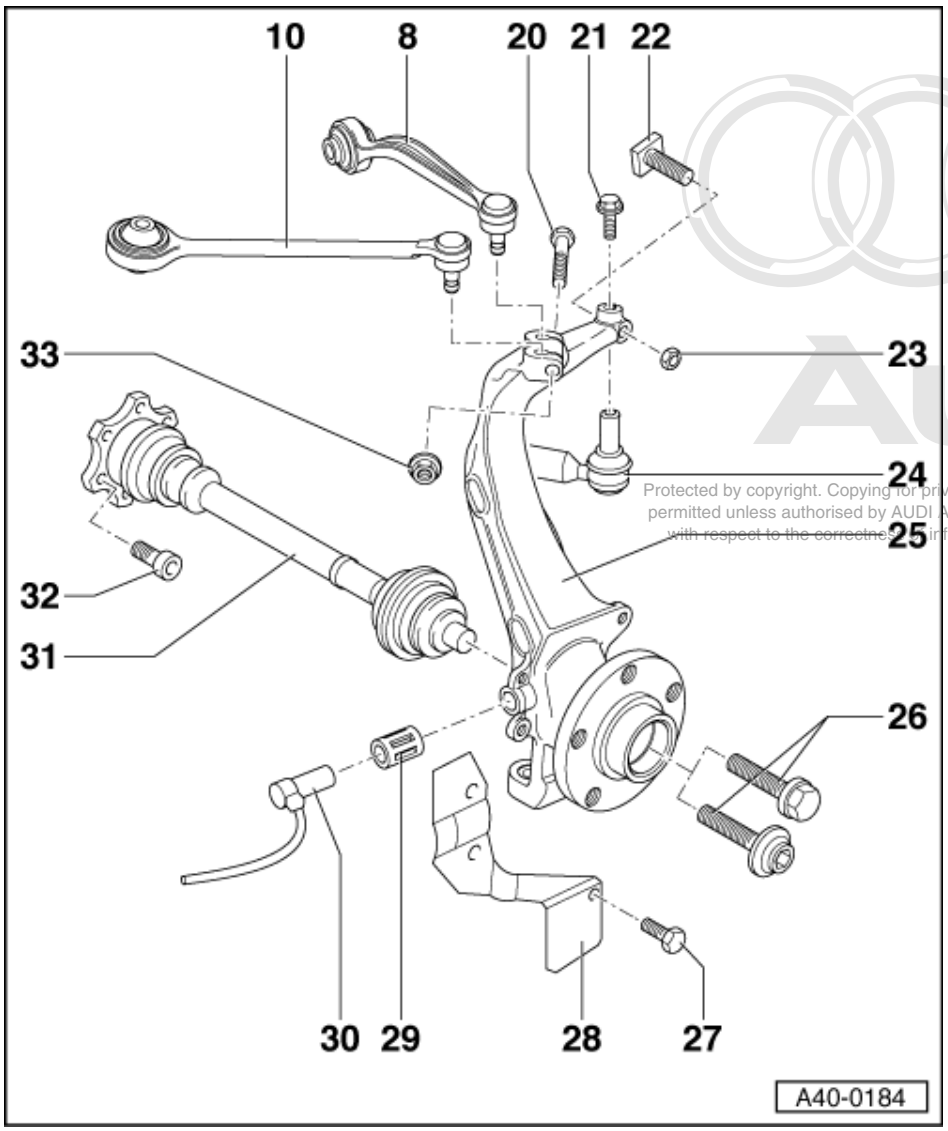

26 Collared bolt

- Always replace
- Tighten to 190 Nm and then give a further 180° turn
- Note =>Page 82
- Switched from hexagon head to hexagon socket. Mixed combinations permitted
- Vehicle must be standing on wheels for unscrewing and tightening (risk of accident)

27 Hexagon bolt, 10 Nm

28 Cover plate

29 Clamping sleeve

- Always replace
- Grease the hole in the wheel bearing housing with lubricating paste G 000 650 before inserting
- Press up to stop into wheel bearing housing

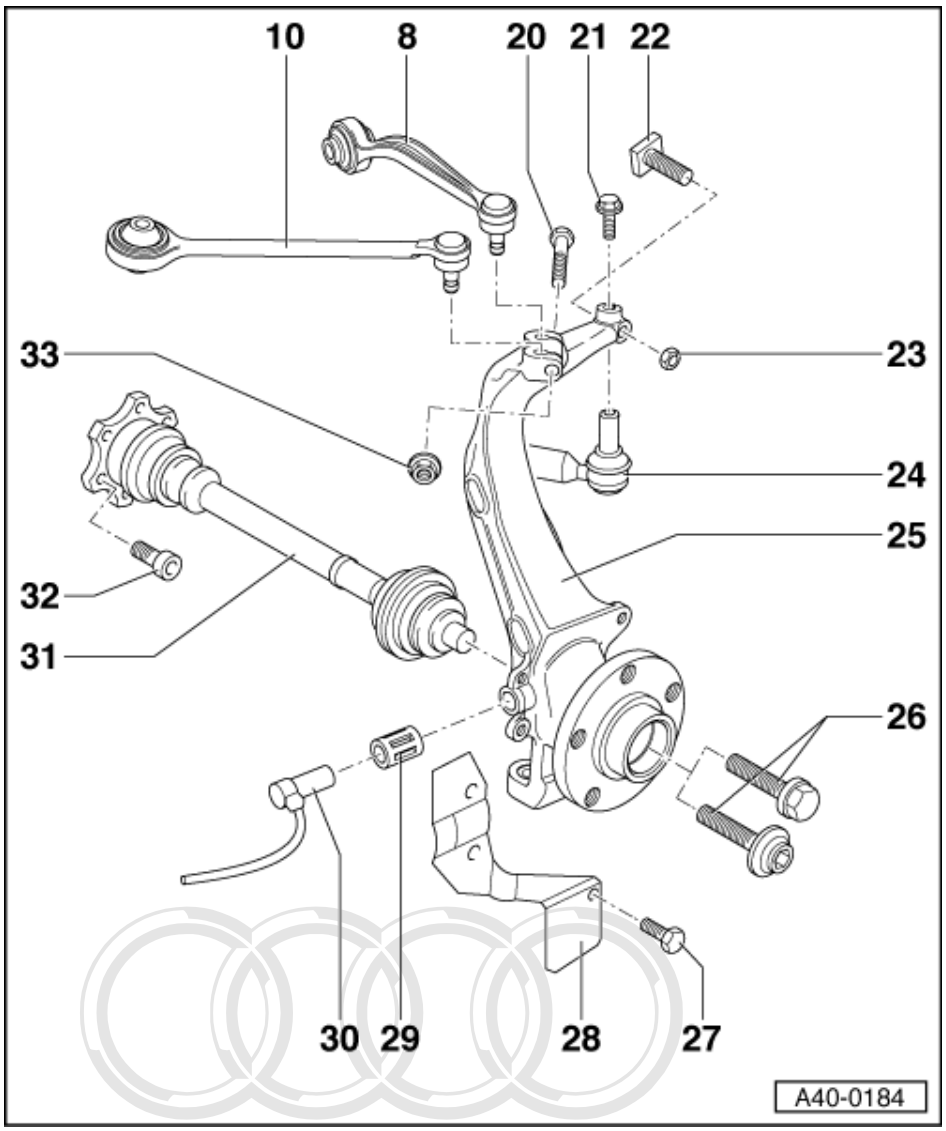

30 Speed sensor

- Pull out to remove
- Routing => Page 28

31 Drive shaft

- Removing and installing =>Page 82
- Servicing => Page 85

32 Multi-point socket head bolt, 70 Nm

33 Self-locking nut, 40 Nm

- Always replace

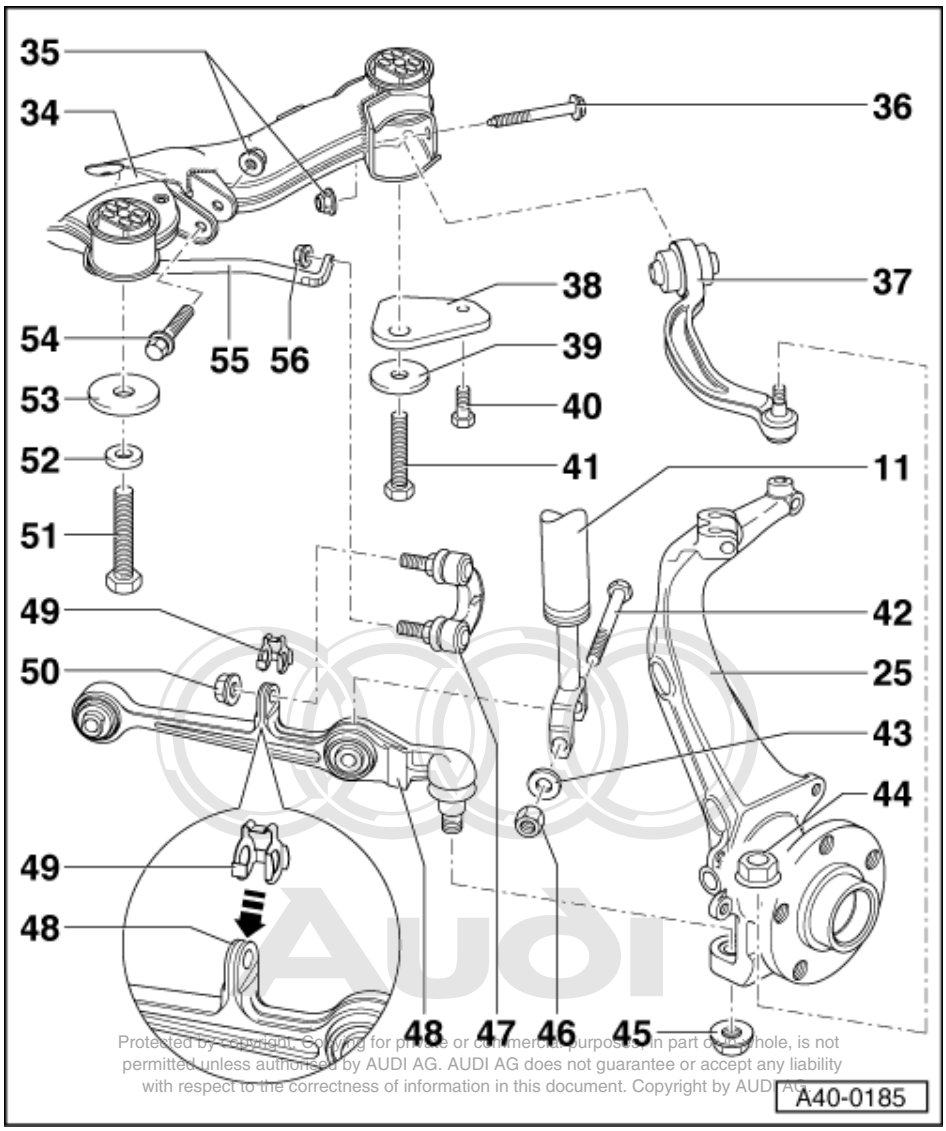

34 Subframe

- Removing and installing
  =>Page 62
- Replacing bushes => Page 64

Note:

Do not lift vehicle at subframe.

35 Self-locking nut

- Always replace

36 Combi bolt

- Always replace
- Tighten to 90 Nm and then give a further 90° turn

37 Guide link

- Removing and installing
  =>Page 75
- Bushes must be replaced on both sides of the vehicle up to vehicle identification number 4DZ XN 5000
  Replace hydraulic bush if leaking => Page 77

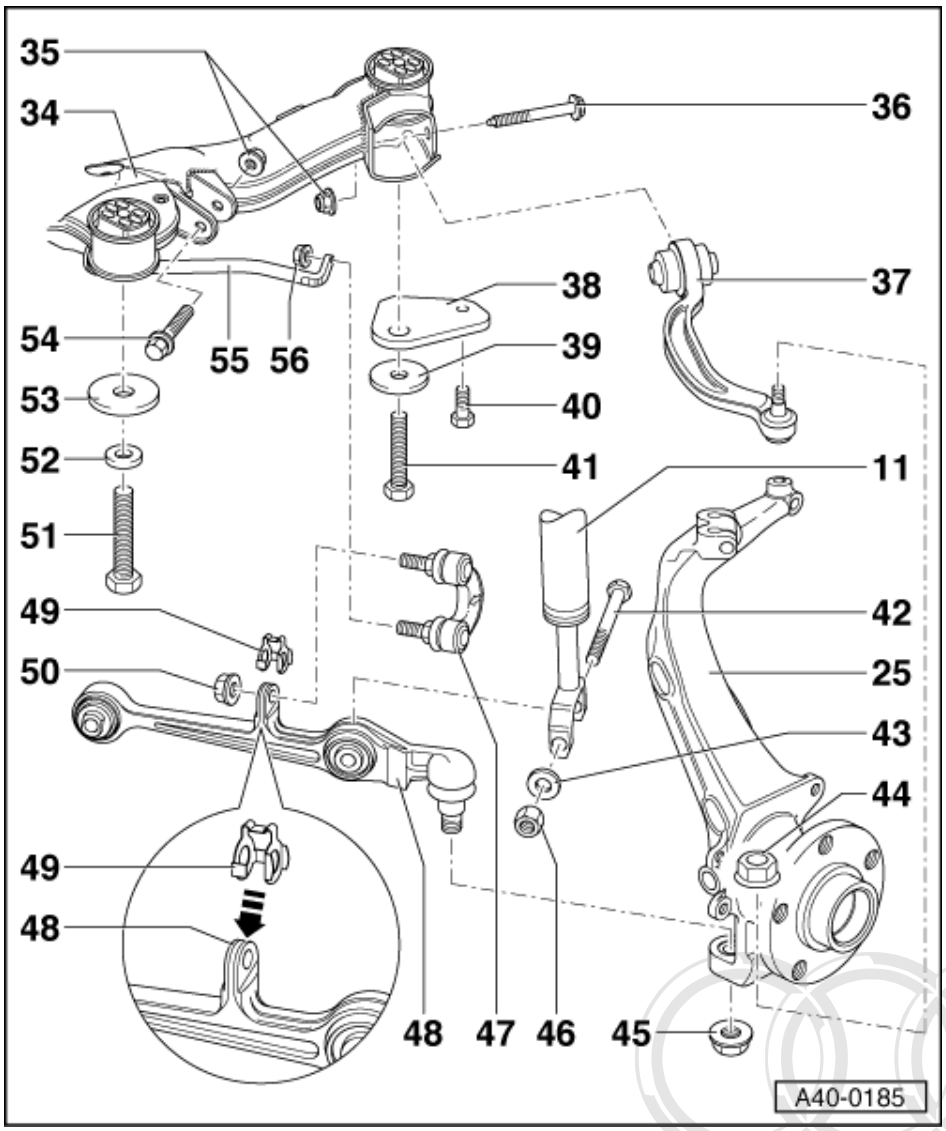

38 Subframe support

39 Washer

- Always replace

40 Hexagon bolt, 25 Nm

41 Hexagon bolt

- Always replace
- Tighten to 150 Nm and then give a further 90° turn
- Threads in the body can be repaired by using a wire thread insert fashioned according to DIN 8140 (Heli-Coil).
  The thread insert must be of the same length as the thread in the body.

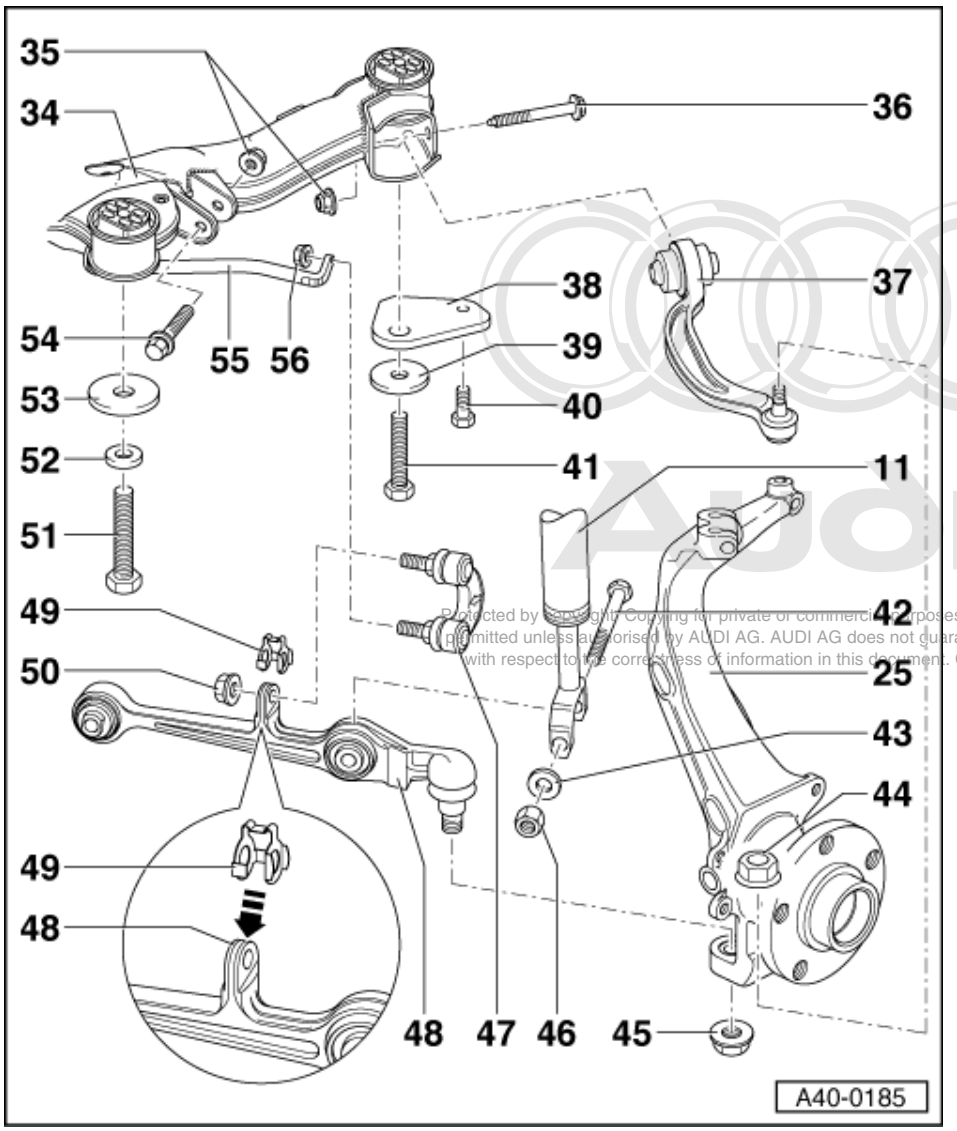

42 Hexagon bolt

43 Washer

44 Collared nut, 100 Nm

- 125 Nm for aluminium wheel carrier
- Always replace

45 Collared nut, 100 Nm

- 125 Nm for aluminium wheel carrier
- Always replace

46 Self-locking nut, 90 Nm

- Always replace

47 Connecting link

- Arrow on connecting link points in direction of travel
- Note the changed connecting link and tightening torque => Page 81

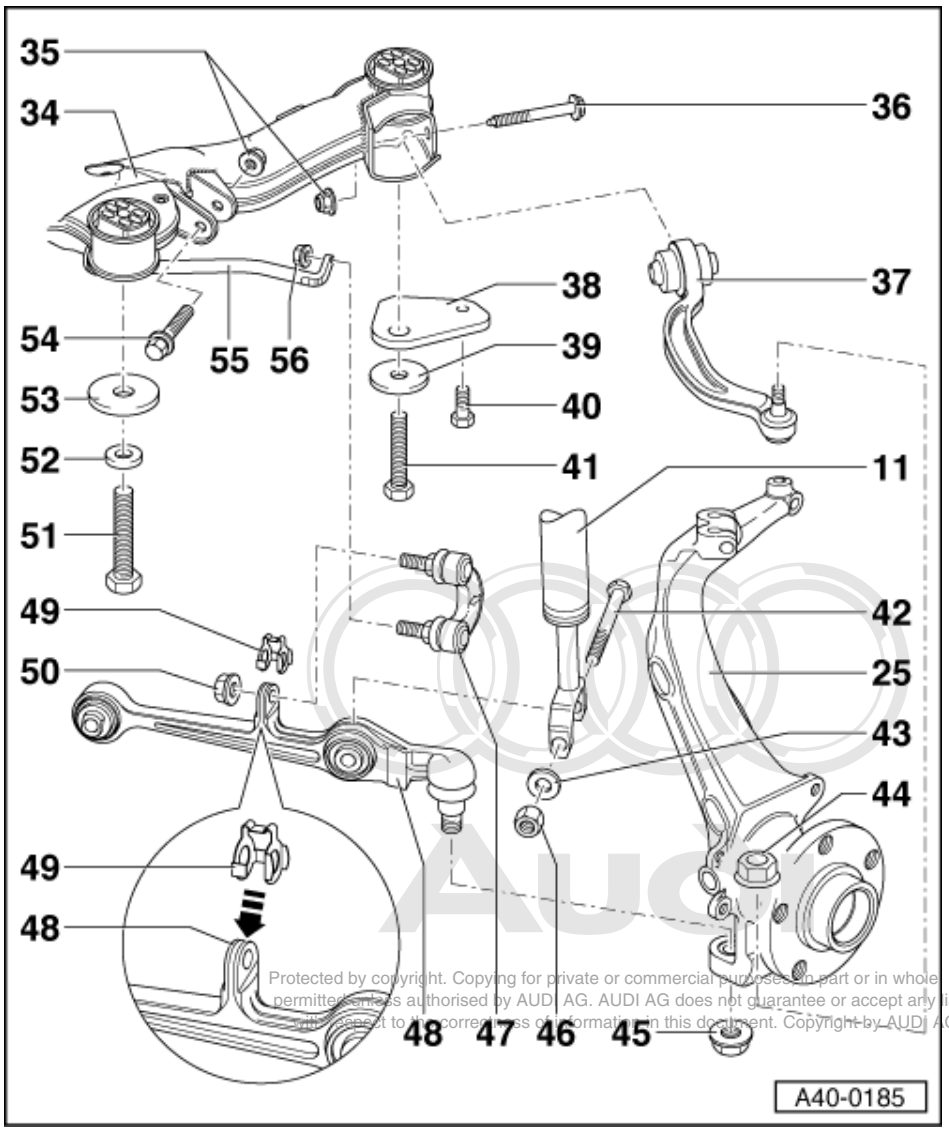

48 Track control link

- For vehicles with headlight range control, refer to =>Page 70
- Removing and installing
  =>Page 67 .
- Replacing bushes => Page 71
- Bushes must be replaced on both sides of the vehicle up to vehicle identification number 4DZ XN 5000

49 Clamp

- Inserted in track control link
- Always replace

50 Self-locking hexagon nut

- Renew each time after removing
- 40 Nm and turn further 90°
- Underside of nut is ribbed
  Always use this special nut for replacement purposes.

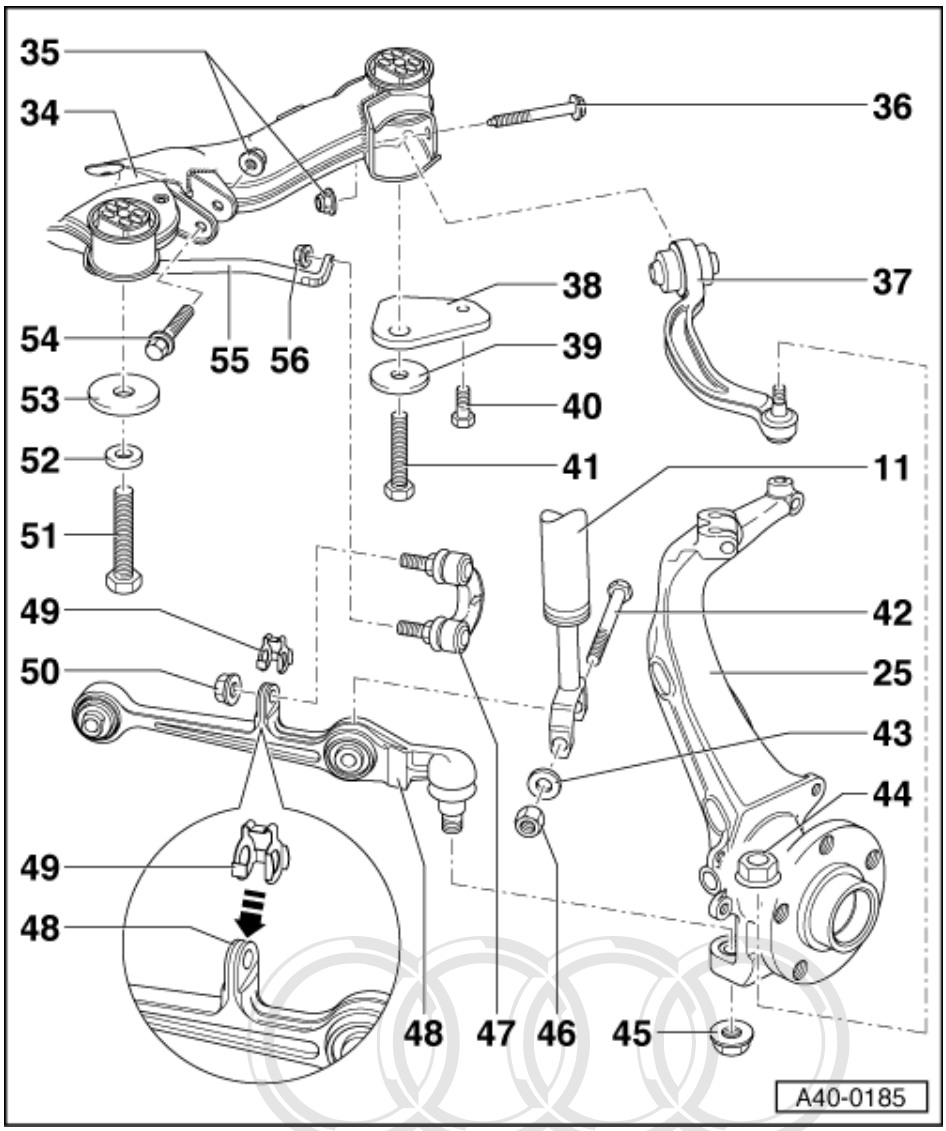

51 Hexagon bolt

- Always replace
- Tighten to 150 Nm and then give a further 90° turn
- Threaded plate in the body may be replaced.

52 Spring washer

- Always replace
- Locking edges face towards bolt head

53 Washer

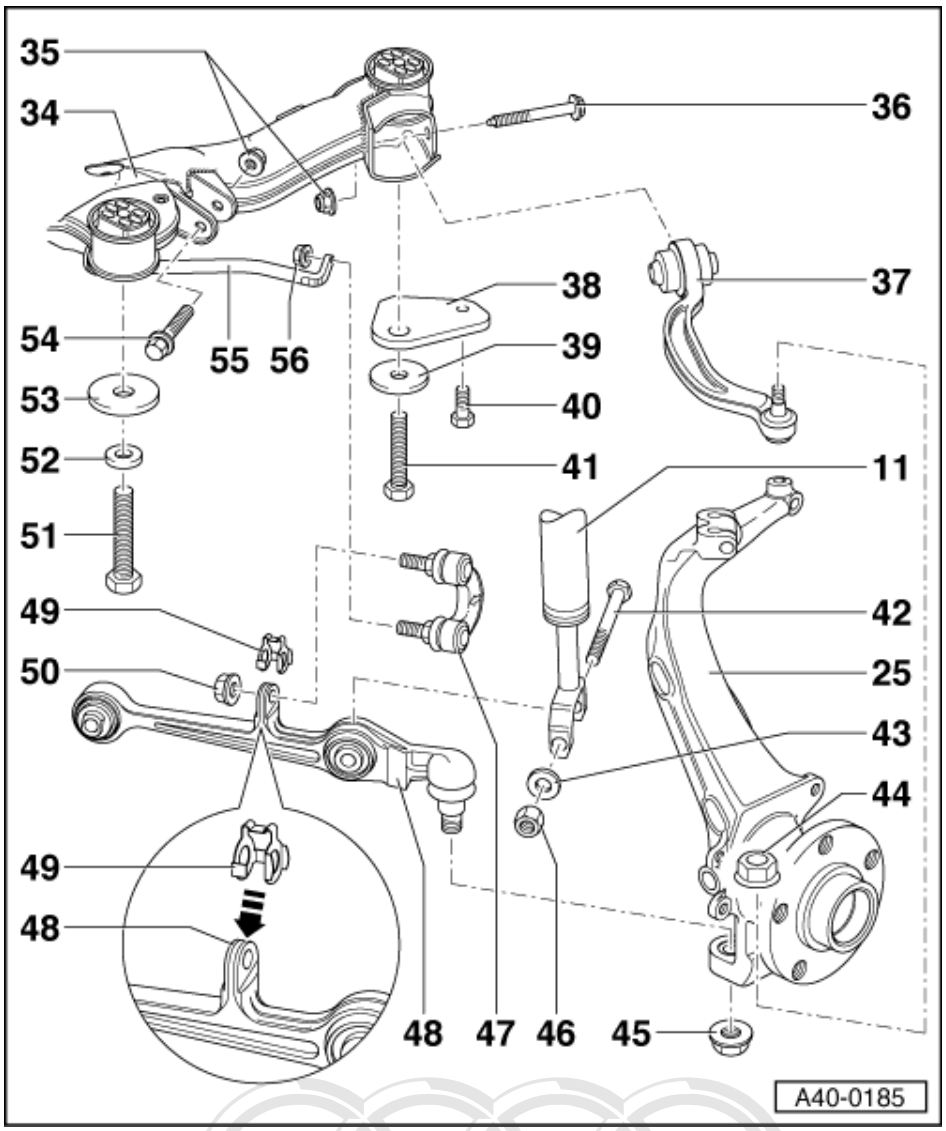

54 Combi bolt

- Always replace
- Tighten to 90 Nm and then give a further 90° turn

55 Anti-roll bar

- Note different running gear versions; see vehicle data sticker => Page 216
- Replacing bushes => Page 80
- Different versions =>See Parts List
- Always replace bushes on both sides of the vehicle

56 Self-locking nut

- Note the changed connecting link and tightening torque => Page 81
- Underside of nut is ribbed
- Renew each time after removing
  Always use this special nut for replacement purposes.

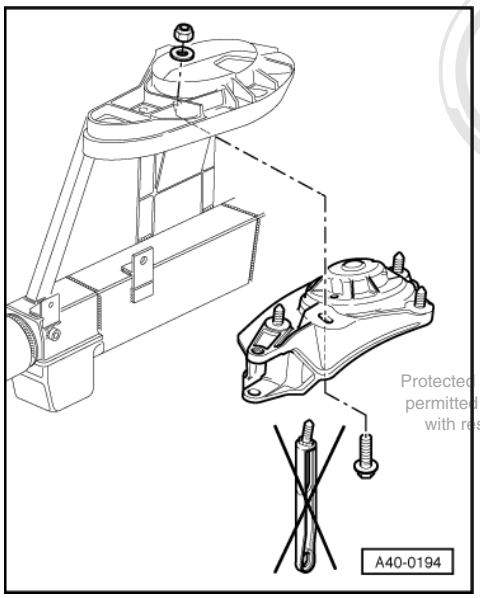

-> Fig.1 Brace discontinued

Refer to the note on => Page 15

2.2 - Removing and installing retainer mount with crossmember

Removing and installing retainer mount with crossmember

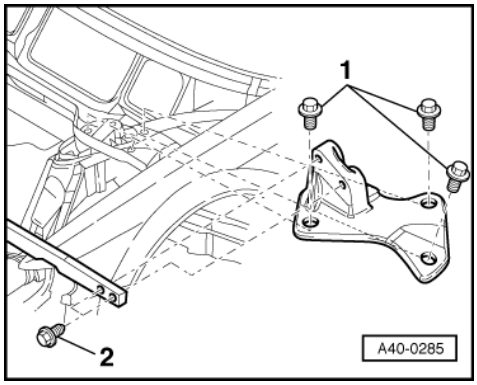

To remove and install mounting retainer with crossmember, screw

- Hexagon bolts, Item 2, out / in
- Hexagon bolts, Item 1, out / in

Tightening torques

- Hexagon bolts -1- and -2-
  Tightening torque 23 Nm

Note:

- Vehicle must be standing on wheels when securing brace to reinforcement.

3 - Removing and installing suspension strut

3.1 - Removing and installing suspension strut

For vehicles with headlight range control, refer to =>Page 69 .

Removing

- Remove wheel.

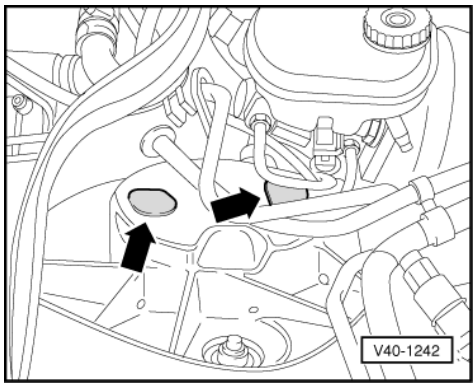

- -> Remove covers -arrow-.

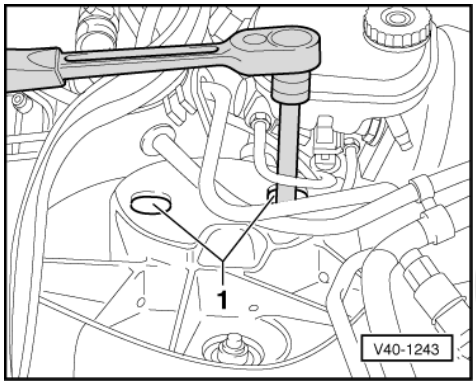

- -> Unscrew suspension strut nuts -1-.

To unscrew the hexagon bolt from the suspension strut/track control link, the guide link must first be detached from the wheel bearing housing.

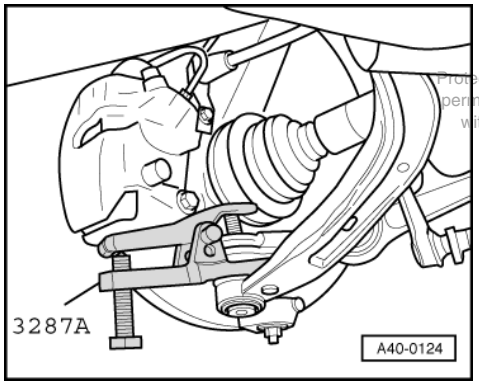

Counterhold joint pin using 4 mm Allen wrench if necessary.

- In vehicles with aluminium wheel bearing housing, note removal and installation of guide link Page => 78 .

- -> Unscrew nut from guide link joint pin and press off joint pin.

  Do not damage boot in the process.

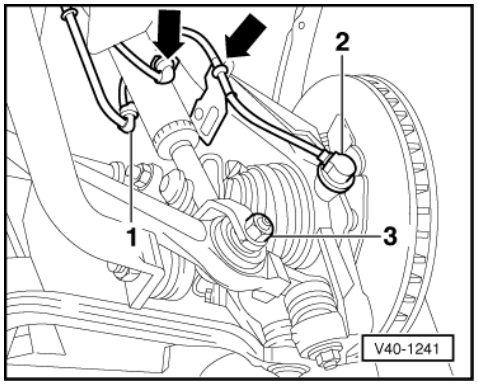

- -> Pull out ABS speed sensor -2- from wheel bearing housing.
- Detach wiring for ABS speed sensor -see arrows-.
- Detach line -1- for brake pad wear indicator.
- Remove bolt -3- suspension strut/track control link.

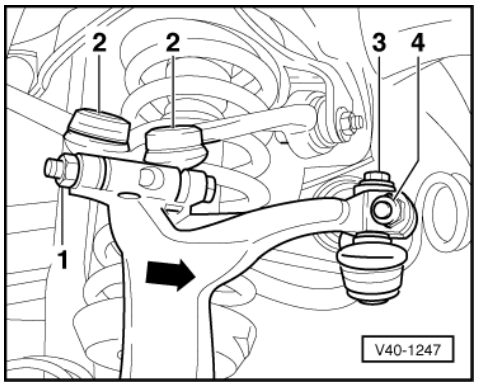

- -> Unscrew nut -1-, remove hexagon bolt.

Notes:

◆ Do not widen slots in wheel bearing housing.

Do not loosen bolts -3- and -4-.

Otherwise the axle alignment has to be checked.

- Pull out both links -2-.

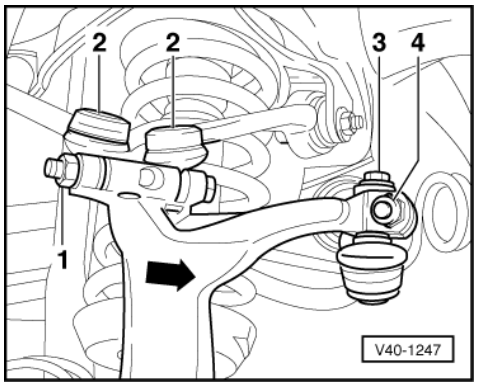

- Swivel wheel bearing housing in direction of arrow.

- Remove suspension strut downwards.

Notes:

- When removing the suspension strut, ensure that the boot is not damaged.
- Servicing suspension strut =>Page 29 .

Upon installation, pay special attention to the following:

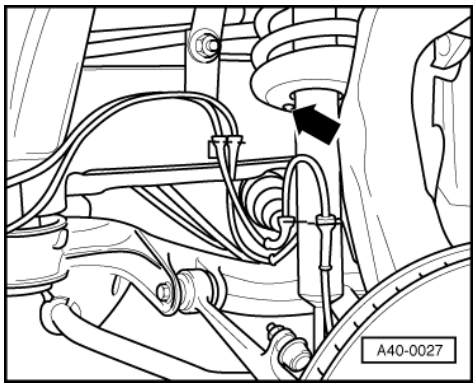

- -> Hole in spring plate faces towards longitudinal member -see arrow-.
- Press ABS wheel speed sensor into wheel bearing housing up to stop.

Tightening torques:

- Suspension strut to track control link, 90 Nm.
- Suspension strut to mounting bracket, 20 Nm.
- Upper link to wheel bearing housing, 40 Nm.

Press upper links into wheel bearing housing during the tightening process.

3.2 - Servicing suspension strut

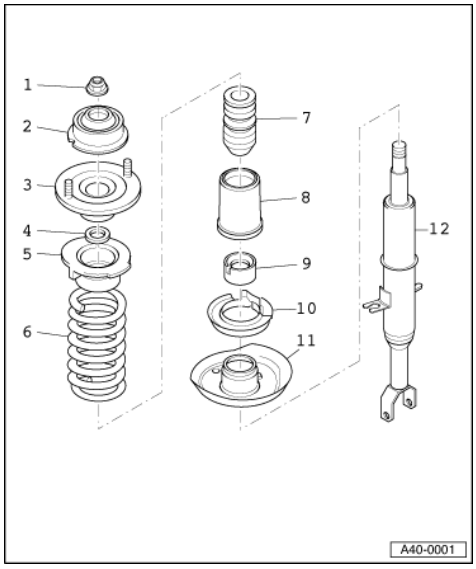

1 **Collared nut, 50 Nm**
- Always replace

2 **Suspension strut mounting**

3 **Upper spring plate**
- Installation position => Fig. 7

4 Washer
5 Upper spring seat

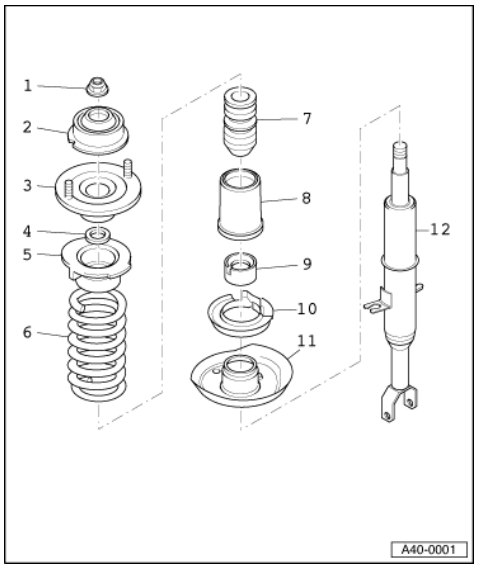

6 Coil spring
- Removing => Fig. 1 , 2 , 3
- Installing => Fig. 6 and 8
- Note different running gear versions; see vehicle data sticker => Page 216
- Allocation

=> Parts Catalogue
7 Stop buffer
8 Protective sleeve
9 Protective cap
10 Lower spring seat
11 Lower spring plate
- Installation position => Fig. 5

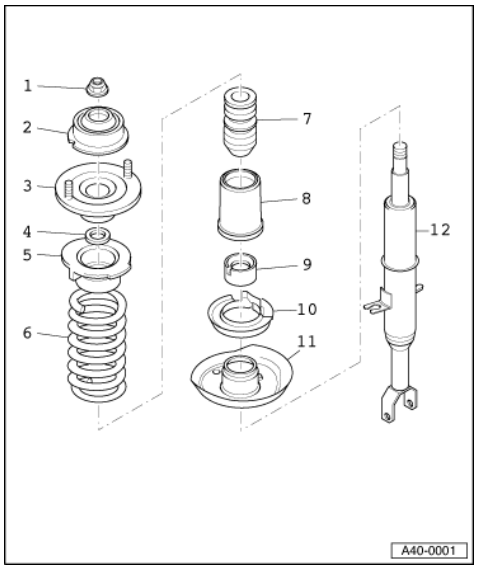

12 Shock absorber
- Replacing => Fig. 4
- Note different running gear versions; see vehicle data sticker => Page 216

- Defective shock absorbers must always be drained and have gas removed before being scrapped => Page 6
- Allocation

=> Parts Catalogue

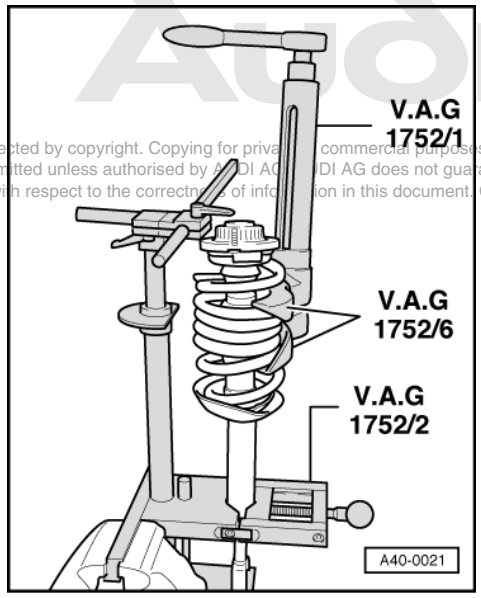

-> Fig.1 Removing coil spring

- Clamp suspension strut holder -V.A.G 1752/2- into vice.
- Clamp suspension strut at shock absorber tube in suspension strut holder.
- Tension coil spring with tensioner -V.A.G 1752/1- until the upper spring plate is free.

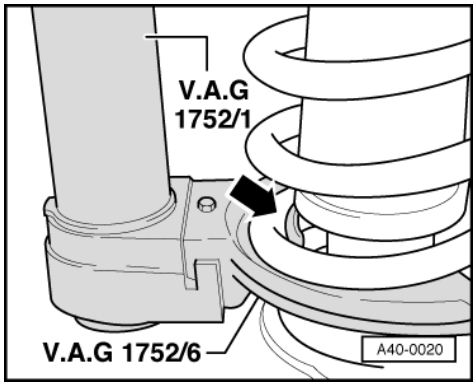

-> Fig.2 Removing coil spring

- ...ensure coil spring is correctly positioned -arrow- in adapter -V.A.G 1752/6-.

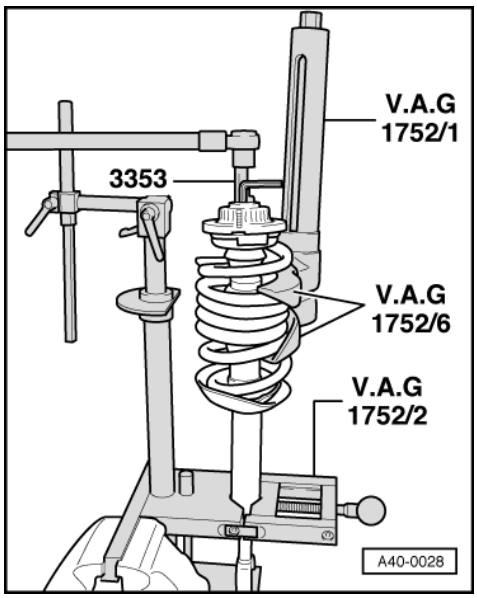

-> Fig.3 Removing coil spring

- Use special tool -3353- to unbolt collared nut from piston rod while counterholding with Allen wrench.
- Detach components of suspension strut and pretensioned coil spring using tensioner -V.A.G 1752/1-.

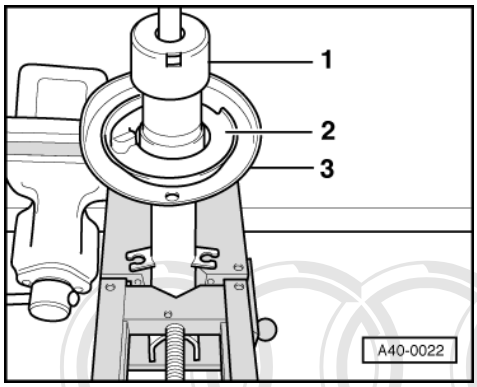

-> Fig.4 Replacing shock absorber

- Remove protective cap -1- and lower spring support -2-.
- Loosen spring plate -3- with a plastic hammer and remove.

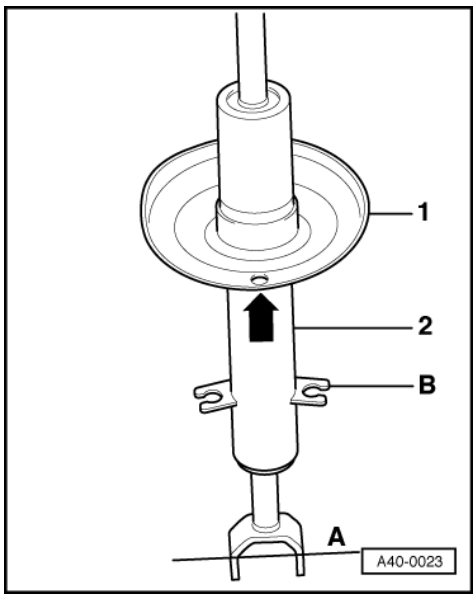

-> Fig.5 Installation position of lower spring plate

1 - Spring plate
2 - Shock absorber
A - Shock absorber axis
B - Brackets

- Hole -see arrow- in spring plate should be offset by 90°±2° to shock absorber axis
- The brackets face towards the hole.

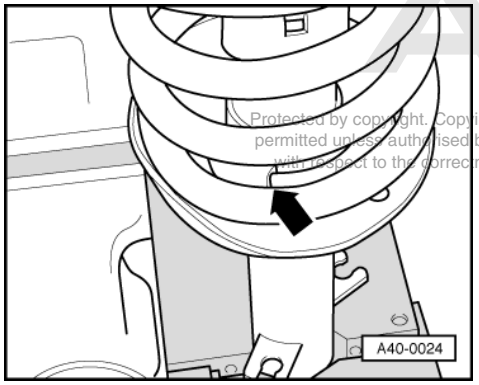

-> Fig.6 Installing coil spring

- Install protective cap, spring plate and lower spring support.
- Mount pretensioned coil spring with tensioner -V.A.G 1752/1- on spring pad at bottom; end of spring coil must make contact with stop -arrow-.

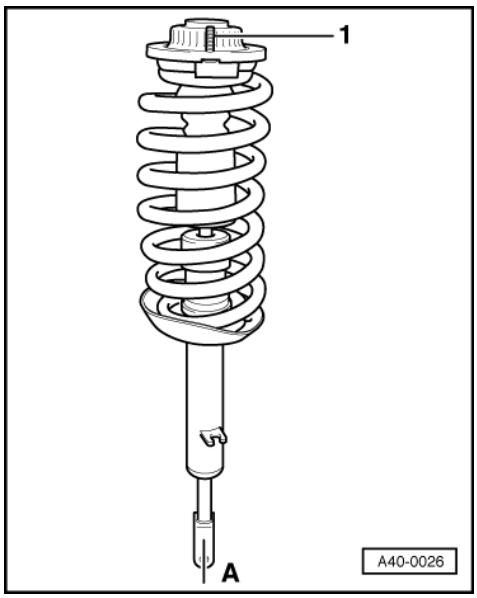

-> Fig.7 Installation position of upper spring plate

1 - Spring plate to stud
A - Shock absorber axis

- Spring plate studs must align with the shock absorber axis.
- Permissible deviation: ± 2°.

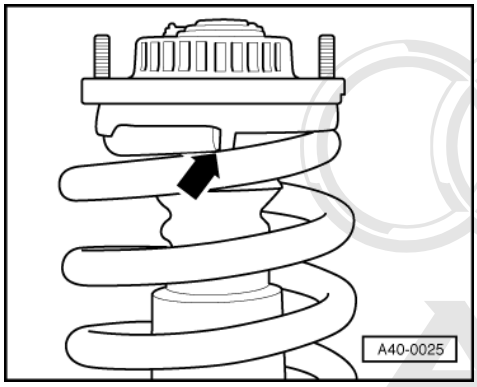

-> Fig.8 Installing coil spring

- Attach individual suspension strut parts. Ensure that the spring end contacts the stop of the upper spring pad -see arrow-.
- Tighten collared nut using special tool -3353-; 50 Nm.=>compare Fig. 3 .
- Relieve tension on coil spring.

4 - Removing and installing steel wheel bearing housing

4.1 - Removing and installing steel wheel bearing housing

Removing

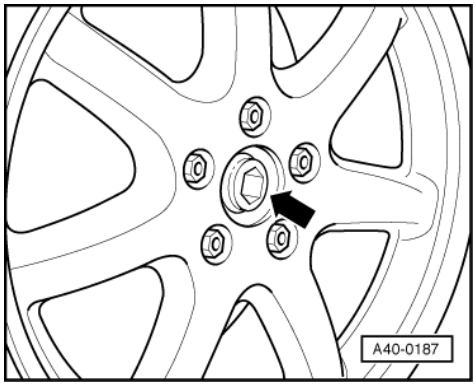

- Lever off hub caps from disc wheel or pull off using suction puller -3208-.
- -> Unscrew the collared bolt -arrow-.

Note =>Page 82

Important Vehicle must be standing on wheels when unscrewing and tightening the collared bolt. -Risk of accident-

- Remove wheel.
- Secure brake disc with a wheel bolt.

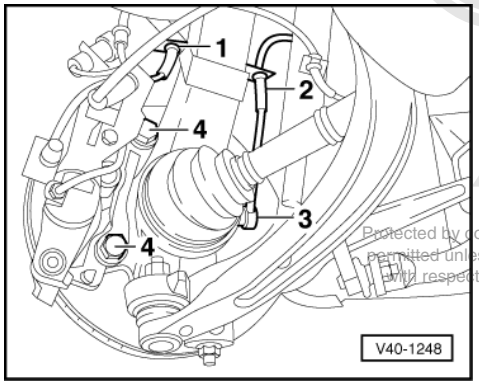

- -> Detach wiring -1- for brake pad wear indicator from retainer.
- Pull out ABS speed sensor -3- and wiring -2-.
- Unbolt the brake caliper -4-.

For the HP -2- brake caliper procedure, refer to => Page 43

Notes:

- Fasten brake caliper to body using wire.
- Do not suspend the brake caliper from the brake hose.

- Remove brake disc.

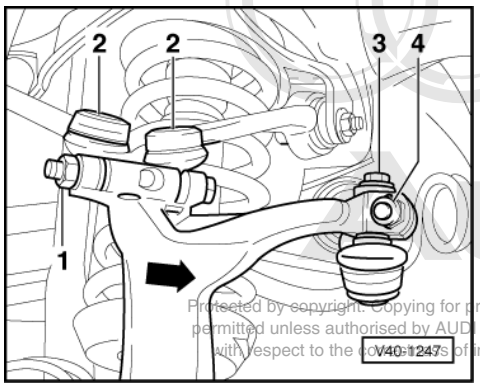

- -> Unscrew combi bolt -3- and bolt -4-.

Notes:

- Combi bolt -3- on right track rod is discontinued
- Perform wheel alignment after completing repair => Page 212

- Pull out track rod.

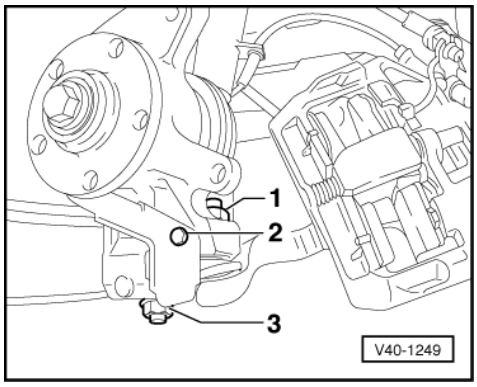

- -> Unscrew cover plate -2-.
- Unscrew nuts -1- and -3-.

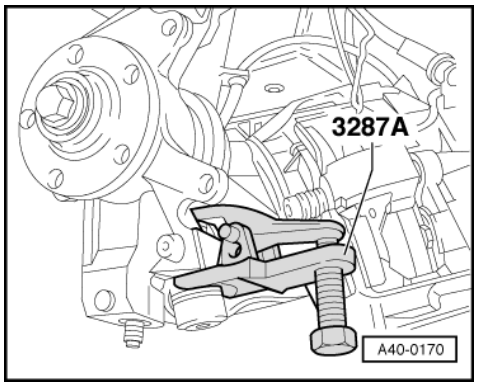

- -> Release guide link joint pin out of tapered seat using special tool.

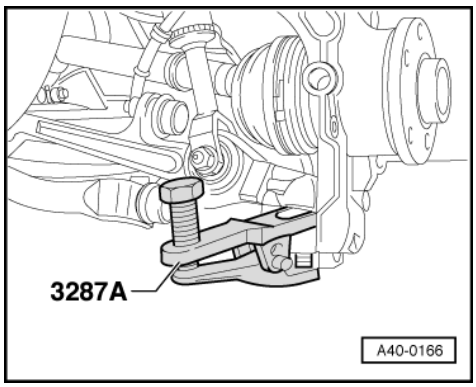

For vehicles with headlight range control, refer to =>Page 69 .

- -> Release track control link joint pin out of tapered seat using special tool.

Notes:

- Protect the boot from damage, e.g. use a leather cloth.
- For safety reasons, refit collared nut on joint pin of track control link and tighten by approx. 4 turns.

- Remove collared bolt (Drive shaft/ wheel hub bolted connection).

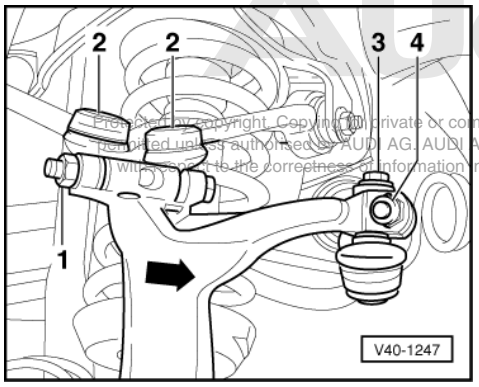

- -> Unscrew nut -1- and remove bolt.
- Pull out both links -2-.

Note:

Do not widen slots in wheel bearing housing.

- Swivel wheel bearing housing in direction of arrow, thereby pulling drive shaft out from wheel hub.
- Unscrew nut from track control link joint pin.
- Remove wheel bearing housing.

When installing, pay special attention to the following:

- Press ABS wheel speed sensor into wheel bearing housing up to stop.

Tightening torques:

- Track control link to wheel bearing housing, 100 Nm.
- Guide link to wheel bearing housing, 100 Nm.
- Upper link to wheel bearing housing, 40 Nm.

Press upper links into wheel bearing housing during the tightening process.

- Brake dust shield to wheel bearing housing, 10 Nm.

- Brake caliper to wheel bearing housing, 190 Nm.

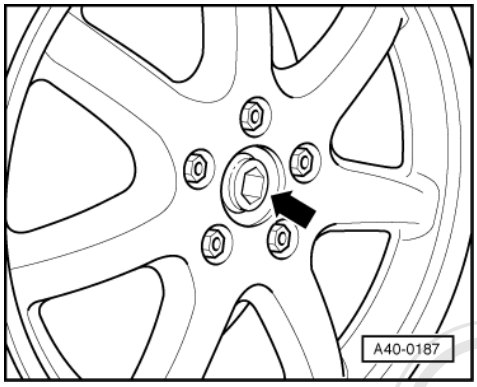

- -> Tighten the collared bolt to 190 Nm and then give it a further 180° turn

Note =>Page 83

Important Vehicle must be standing on wheels when unscrewing and tightening the collared bolt. -Risk of accident-

Note:

- Perform wheel alignment =>Page 212

4.2 - Servicing wheel bearing housing with pressed-in wheel bearing

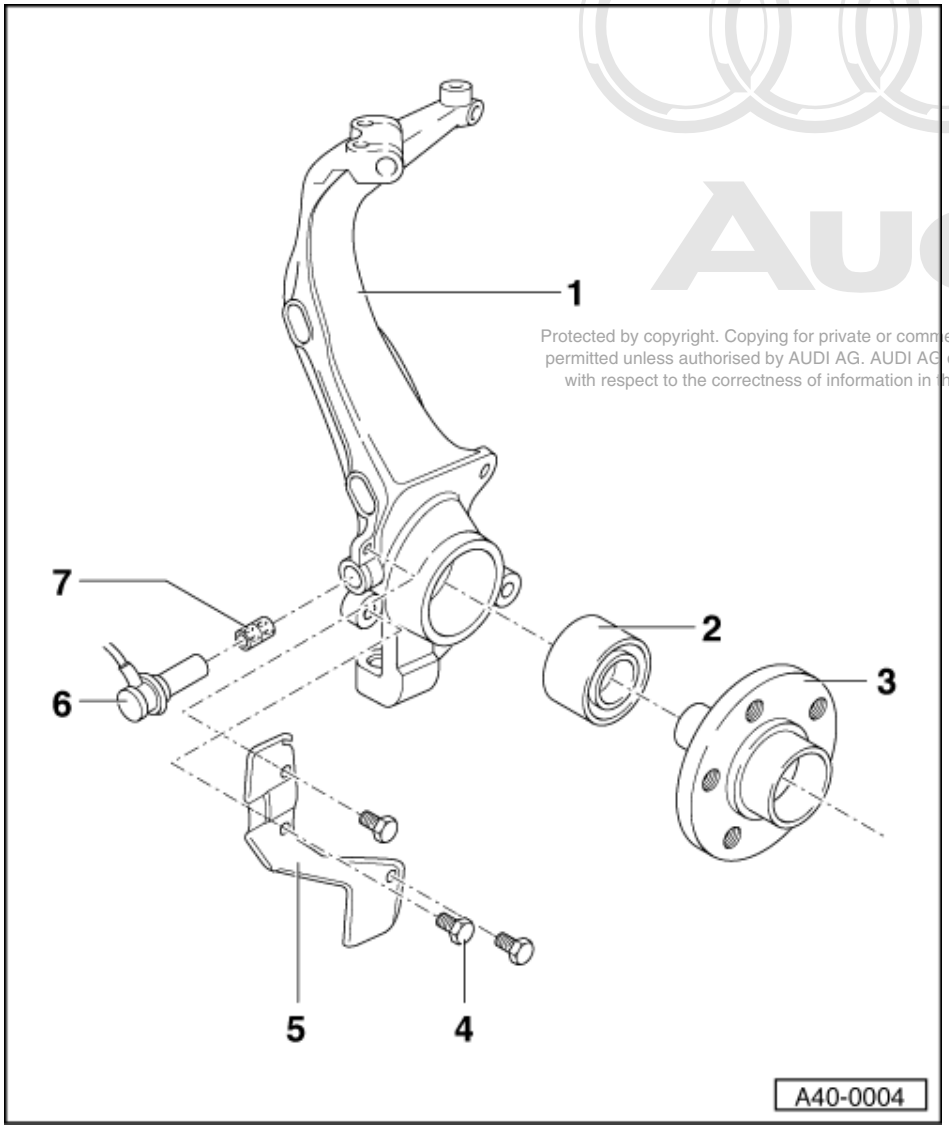

1 Wheel bearing housing

For wheel bearing with outer-ø 85 mm, or 82 mm, respectively.

It is permissible to install e.g. ø 85 on left and ø82 on right side.

- Removing and installing
  =>Page 35

2 Wheel bearing
- Always replace
- Installation position:
- Large internal diameter of wheel bearing faces wheel hub
- Pressing out =>Fig. 2
- Pulling off bearing inner race => Fig. 3
- Pressing in => Fig. 4

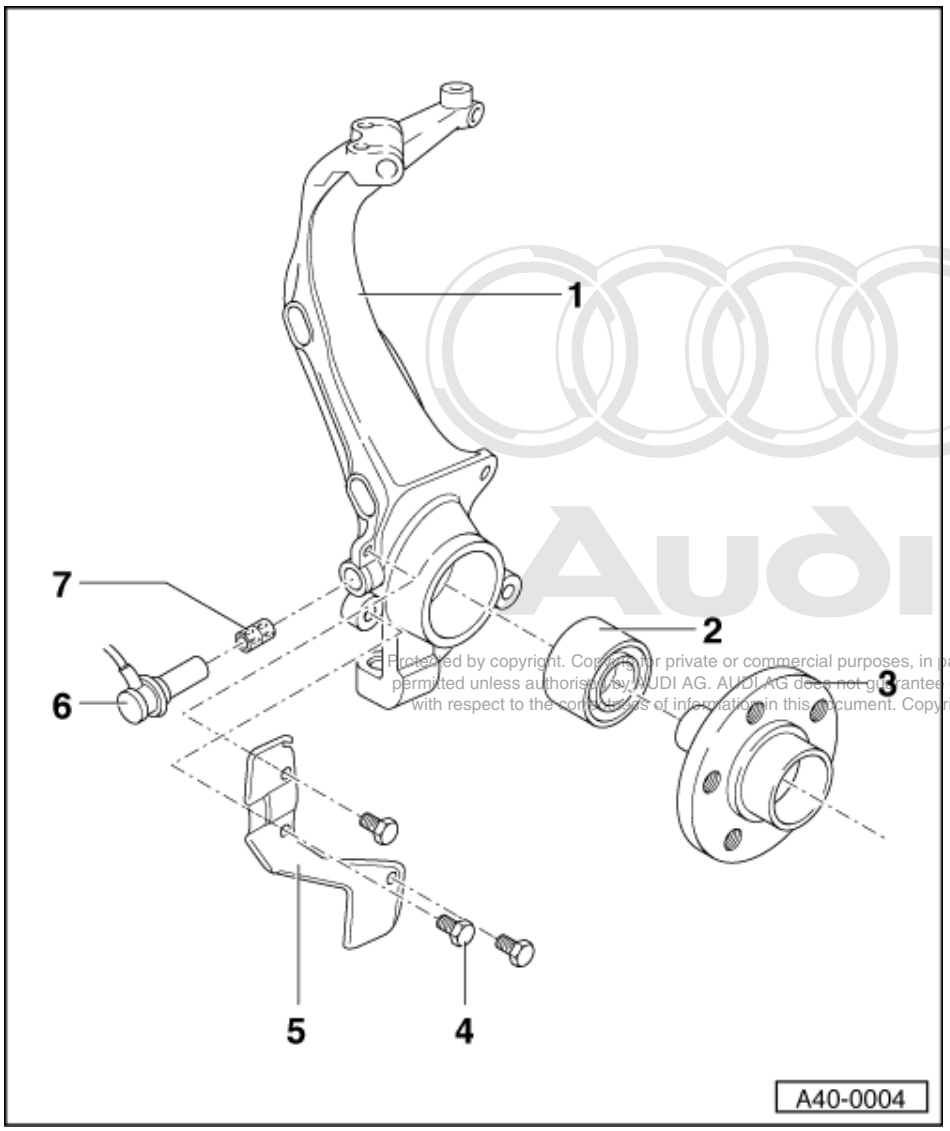

3 Wheel hub
- Stepped version
- Pressing out =>Fig. 1
- Pressing in => Fig. 5

4 Hexagon bolt, 10 Nm

5 Cover plate

6 Speed sensor
- Pull out to remove
- Before inserting sensor, clean fitting hole inner surface and coat with lubricating paste G 000 650.
- Routing => Page 28

7 Sleeve
- Grease all around with lubricating paste G 000 650 before inserting in wheel bearing housing
- Press up to stop into wheel bearing housing

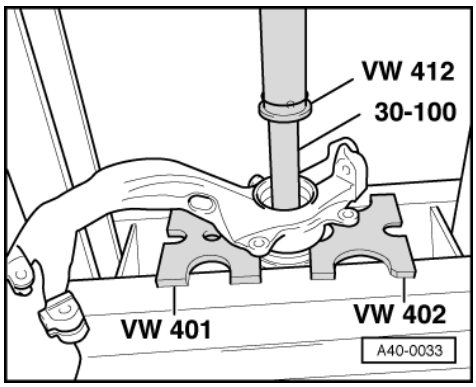

-> Fig.1 Pressing out wheel hub

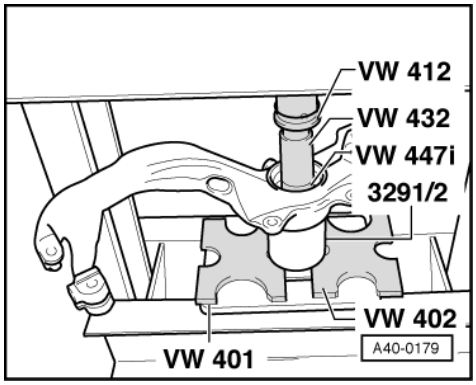

-> Fig.2 Pressing wheel bearing out of wheel bearing housing

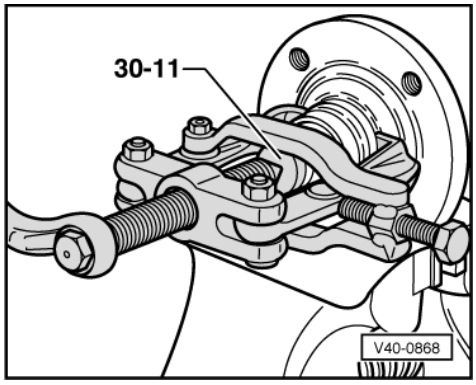

-> Fig.3 Pulling bearing inner race off wheel hub

Always use puller with clamp, e.g. Kukko 204- 1 (commercially available).

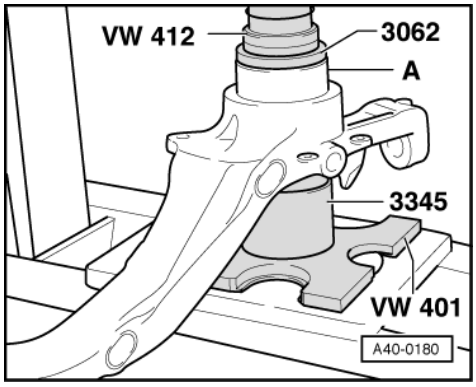

-> Fig.4 Pressing wheel bearing into wheel bearing housing

For wheel bearing with outer-ø 82 mm use the thrust pad -3124-, for outer-ø 85 mm use thrust pad -3062-.

Note:

Large internal diameter of wheel bearing faces wheel hub

- Press wheel bearing -A- in up to stop.

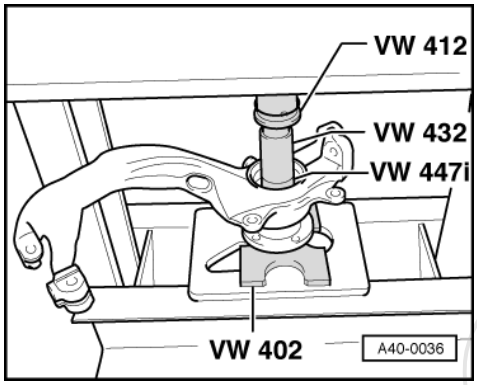

-> Fig.5 Pressing wheel hub into wheel bearing

- When pressing in, thrust pad -VW 447i- must only make contact with the bearing inner race.

5 - Removing and installing aluminium wheel bearing housing

5.1 - Removing and installing aluminium wheel bearing housing

Removing

- Remove wheel trim; on light-alloy wheels, detach cover cap (puller in vehicle tool kit).
- Unscrew hexagon bolt for drive shaft. (Loosen only when vehicle is standing on wheels -danger of accident-).

Note =>Page 82

- Secure brake disc with a wheel bolt.

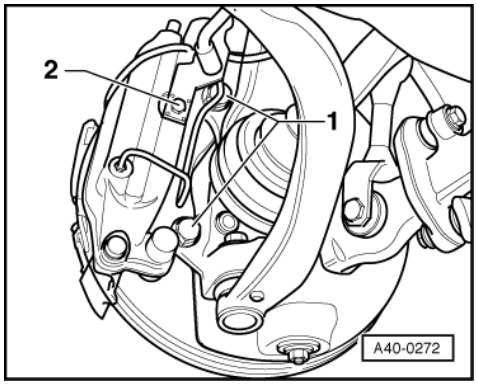

- Unscrew hexagon bolt -2-.
- Pull ABS speed sensor wiring out of retainer on wheel bearing housing.
- -> Remove bolts -1- for brake caliper and remove brake caliper.
- Tighten hexagon bolt -2-.

Note:

The brake caliper must not be reattached to e.g. the body before the brake line holder has not yet been bolted on using bolt -2-.

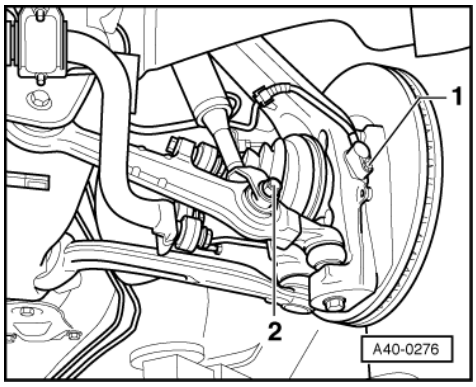

- -> Unscrew bolt -1- for ABS speed sensor.

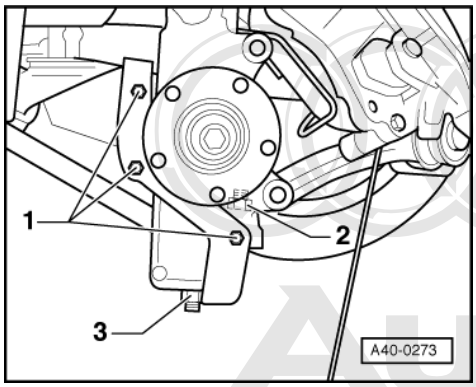

Notes:

- Fasten brake caliper to body using wire.
- Do not suspend the brake caliper from the brake hose.

- Remove brake disc.
- Remove nuts -2- and -3-.

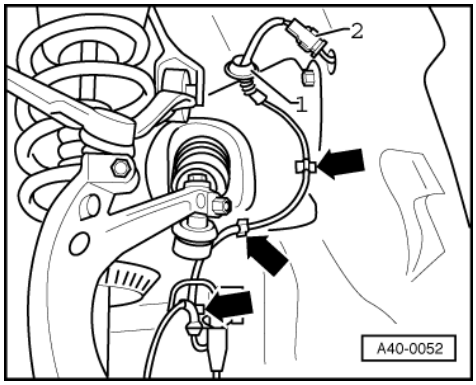

- -> Pull out rubber grommet -1- and detach connector -2-.
- Remove ABS speed sensor wiring from retainers -arrows-.

  Take care not to damage rubber grommet.

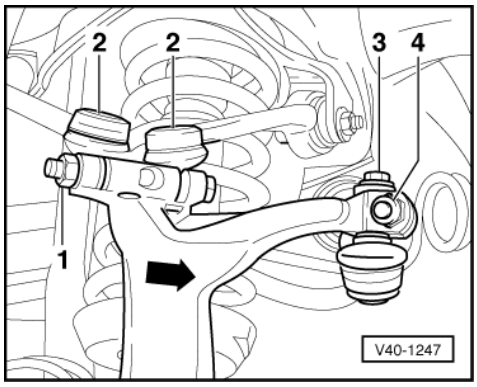

- -> Unscrew combi bolt -3- and bolt -4-.

Notes:

- Combi bolt -3- on right track rod is discontinued

=> Running Gear, FWD and 4WD; Repair group 40

- Check wheel alignment after completing repair.

=> Running Gear, FWD and 4WD; Repair group 44

- Pull out track rod.

- Unscrew nut from joint pin.

Note:

- For safety reasons, refit collared nut on joint pin of track control link and tighten by approx. 4 turns until flush.
- Ensure that the two lever arms are parallel to each other when the greatest force is exerted. If necessary, readjust.

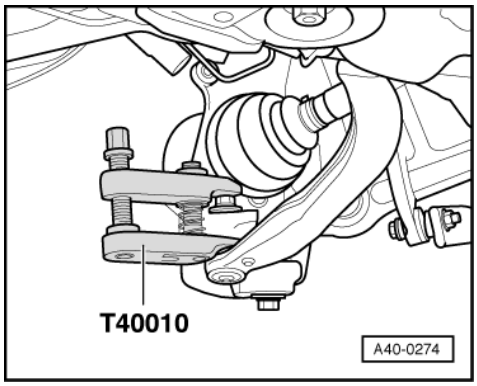

Counterhold joint pin using 4 mm Allen wrench if necessary.

- -> Press joint pin of guide link off tapered seat.

  Do not damage boot in the process.

For vehicles with headlight range control, refer to =>Page 69 .

Note:

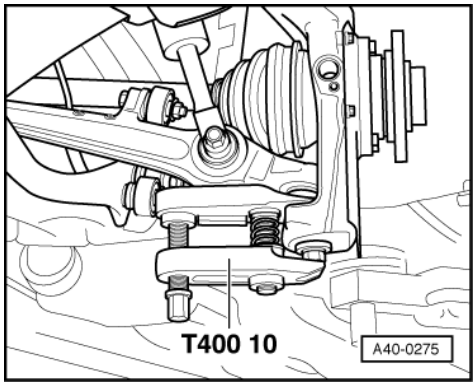

- For safety reasons, refit collared nut on joint pin of track control link and tighten by approx. 4 turns.
- Ensure that the two lever arms are parallel to each other when the greatest force is exerted. If necessary, readjust.

- -> Press joint pin of track control link off tapered seat.

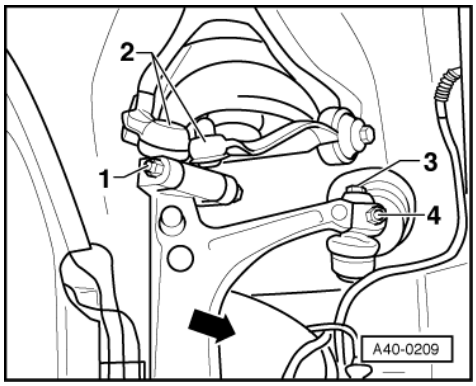

- -> Unscrew nut -1-, remove hexagon bolt and pull out both links -2- in upwards direction.

The slots in the wheel bearing housing must not be widened using a chisel or similar.

- Swivel wheel bearing housing aside in direction of arrow while pulling drive shaft pin out of wheel hub in the process.
- Remove nut from track control link joint pin.
- Remove wheel bearing housing.

Installing

- Insert wheel bearing housing.
- Push outer joint of drive shaft into wheel hub and hand-tighten new hexagon bolt.

- Remove any adhesive residue from thread of joint pin.

- Fit joint pins for track control link and guide link into wheel bearing housing.
- Screw on new self-locking nuts and tighten to 125 Nm.

  Counterhold joint pin using 4 mm Allen wrench if necessary.

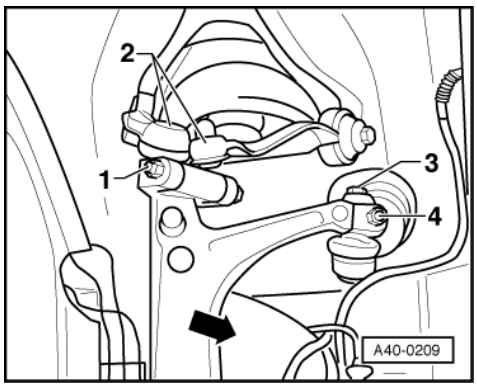

- Insert both upper transverse link joint pins into wheel bearing housing.
- -> Tighten new self-locking nuts -1- to 40 Nm.
  - When tightening, press down upper transverse link as far as possible.
- Insert track rod.
  - Screw on new self-locking nut -4- and tighten to 45 Nm.
  - Tighten hexagon bolt -3- to a maximum of 7 Nm.
- Install ABS speed sensor.

For vehicles with headlight range control, refer to =>Page 69 .

- Screw on cover plate and tighten to 10 Nm.
- Fit brake disc, bolt on brake caliper and tighten to 190 Nm.
- Fit wheel and tighten to 120 Nm.
- Tighten drive shaft hexagon bolt. Only tighten when vehicle is standing on wheels -danger of accident-.
  Tightening torques:
  Hexagon bolt, 190 Nm + 180° further turn

Note =>Page 83

The alignment of the front axle must be checked and if necessary adjusted using VW/Audi-approved wheel alignment equipment.

5.2 - Servicing wheel bearing housing with bolted wheel bearing

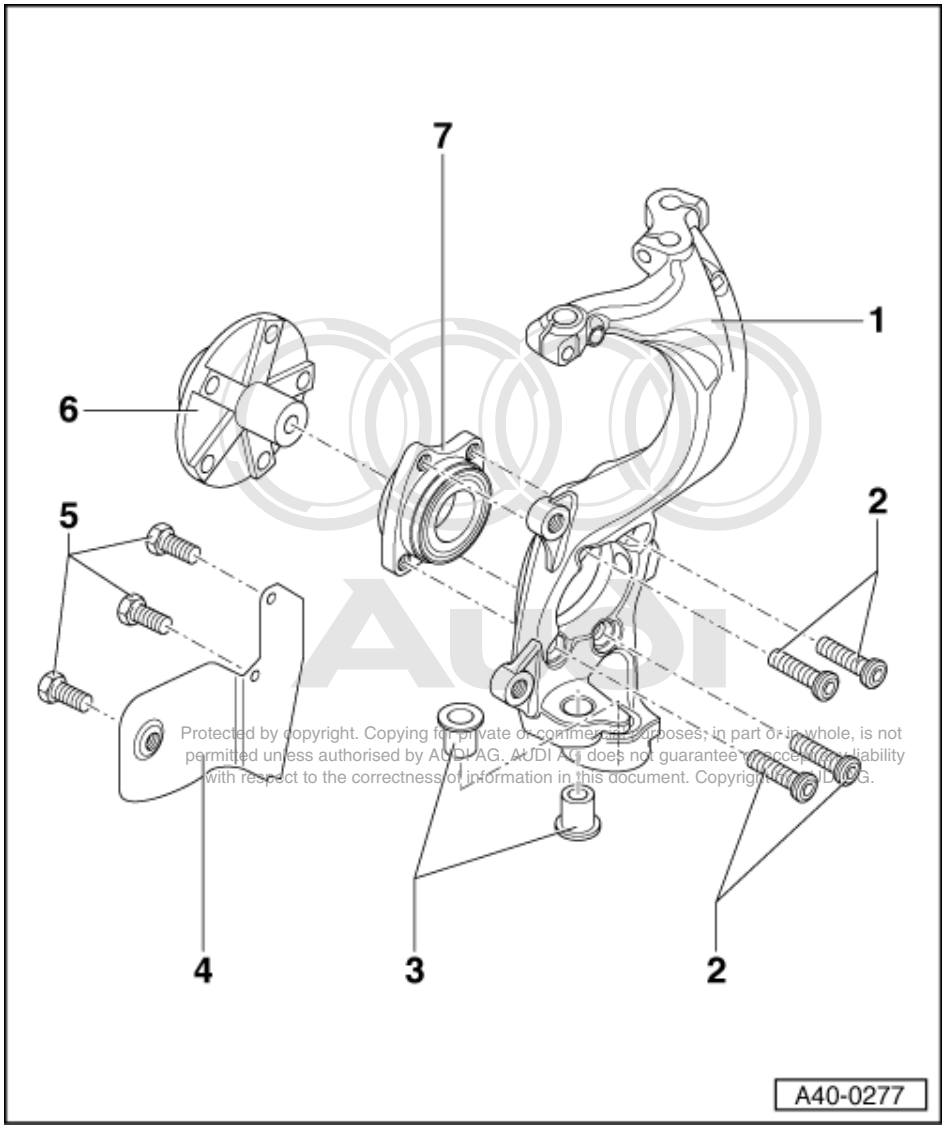

1 Wheel bearing housing
- Note the different running gear versions
- Allocation

=> Parts Catalogue

2 Hemispherical collared bolts:
80 Nm + further 90° turn.

3 Bushes

4 Cover plate

5 Hexagon bolt, 10 Nm

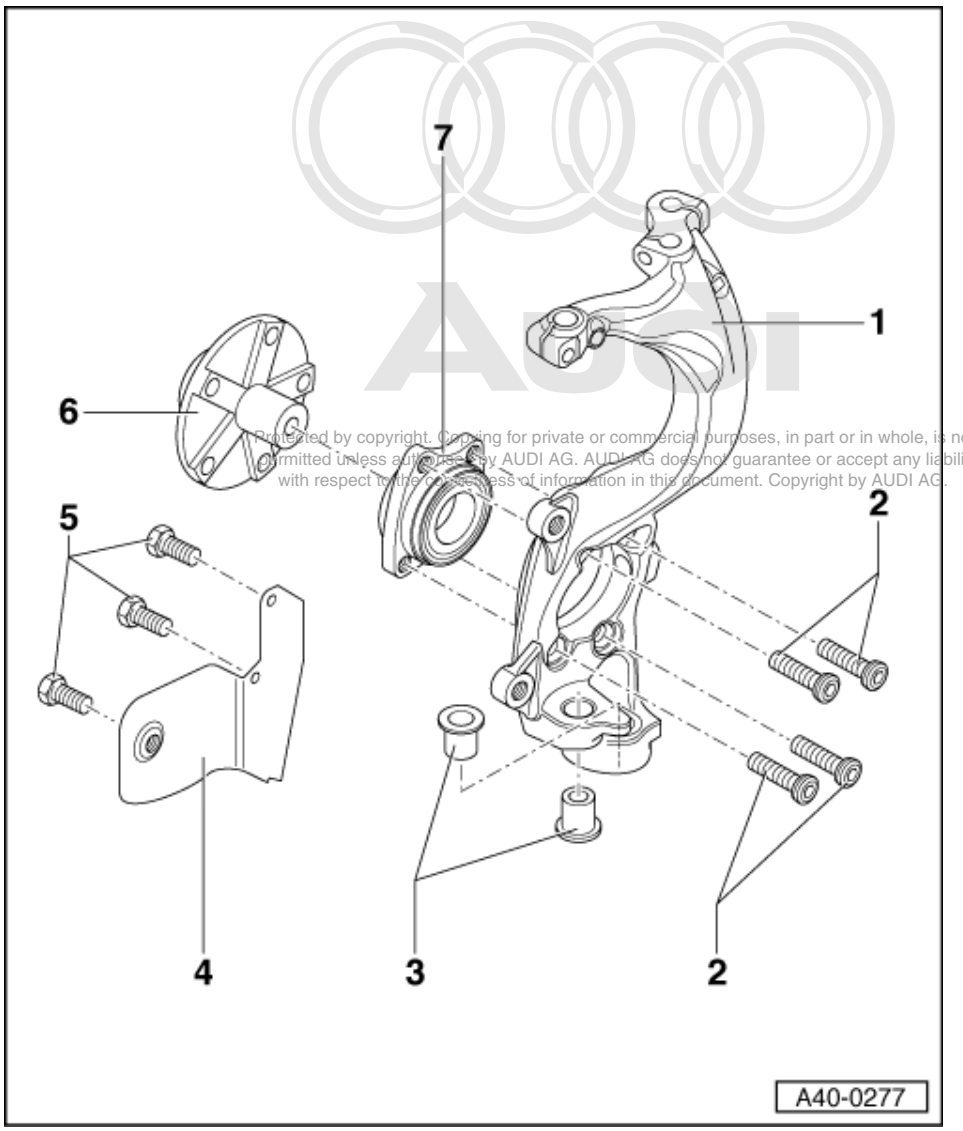

6 Wheel hub

- Pressing out =>Fig. 1
- Pressing off bearing inner race
  =>Fig. 2
- Stepped version
- The bearing/wheel hub contact surfaces and threaded holes must be free of paint and dirt
- Lightweight wheel hub
  => Page 54

7 Ball bearing

- Removing and installing with wheel bearing housing installed
  => Page 48
- Installation position:
- Large internal diameter of wheel bearing faces toward wheel hub
- Pressing off bearing inner race
  =>Fig. 2

Removing

- Remove wheel trim; on light-alloy wheels, detach cover cap (puller in vehicle tool kit).
- Unscrew hexagon bolt for drive shaft. (Loosen only when vehicle is standing on wheels -danger of accident-.)

Note =>Page 82

- Remove wheel.

- Secure brake disc with a wheel bolt.

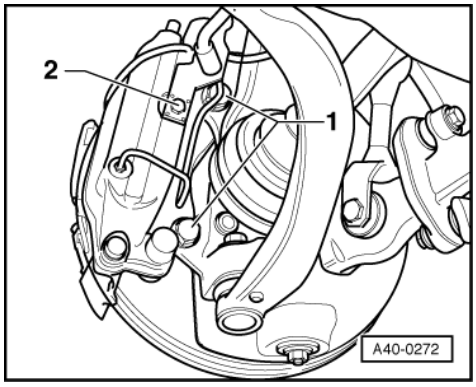

- Unscrew hexagon bolt -2-.
- Pull ABS speed sensor wiring out of retainer on wheel bearing housing.
- -> Remove bolts -1- for brake caliper and remove brake caliper.
- Tighten hexagon bolt -2-.

Note:

The brake caliper must not be reattached to e.g. the body before the brake line holder has not yet been bolted on using bolt -2-.

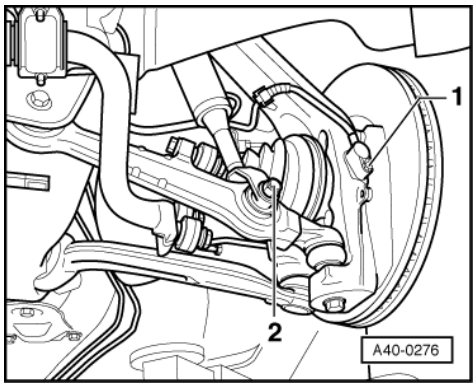

- -> Unscrew bolt -1- for ABS speed sensor.

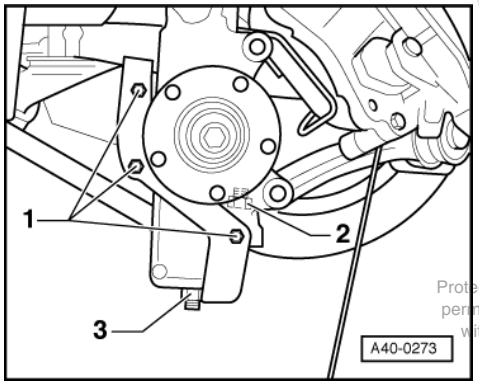

Notes:

- Fasten brake caliper to body using wire.
- Do not suspend the brake caliper from the brake hose.

- Remove brake disc.

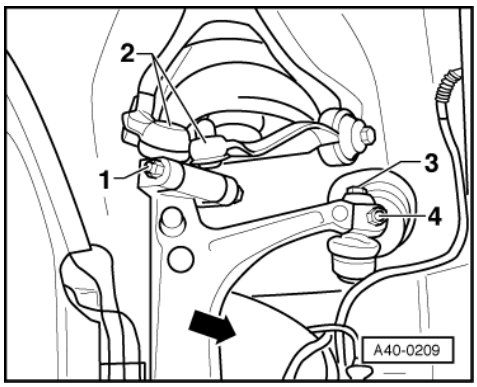

- -> Unscrew nut -1-, remove hexagon bolt and pull out both links -2- in upwards direction.

The slots in the wheel bearing housing must not be widened using a chisel or similar.

- Swivel wheel bearing housing aside in direction of arrow while pulling drive shaft pin out of wheel hub in the process.
- Remove wheel bearing housing.

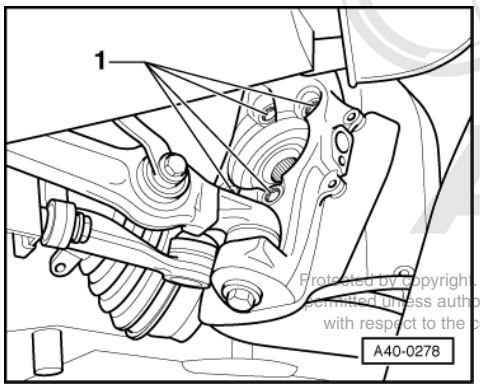

- Unscrew hemispherical collared bolts -1-.
- Remove wheel bearing unit.

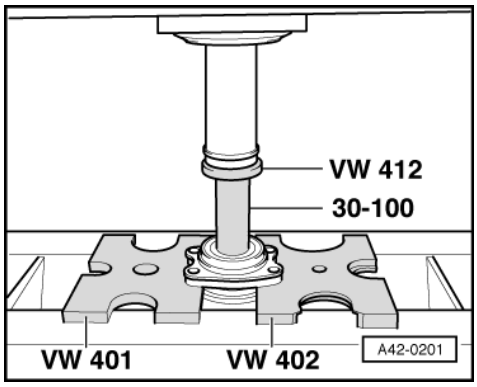

-> Fig.1 Pressing out wheel hub from wheel bearing

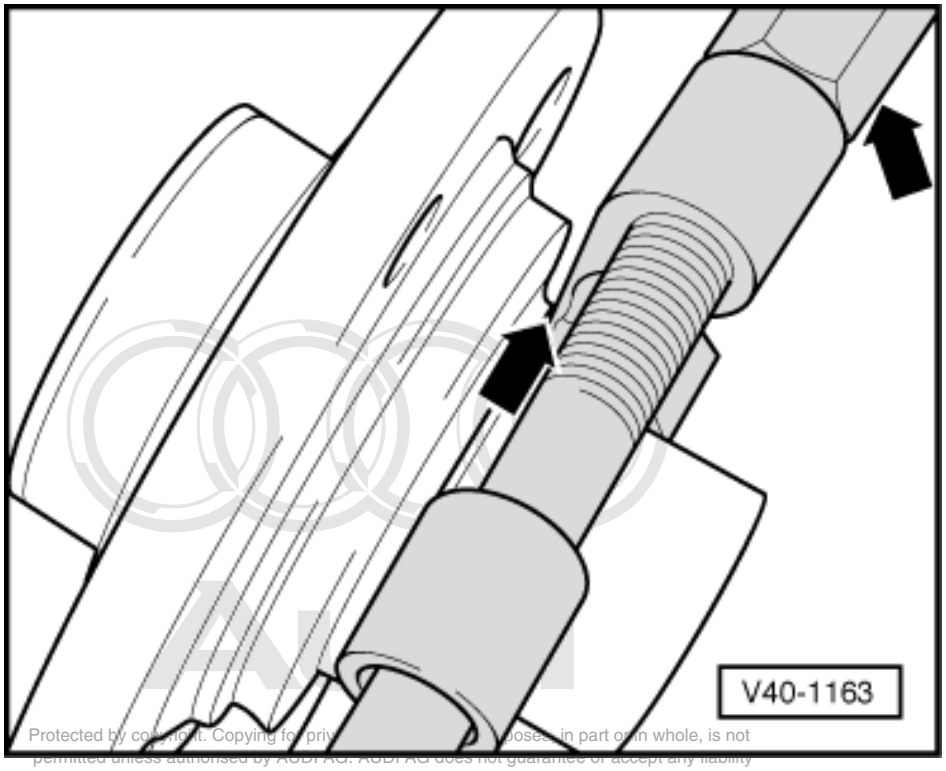

-> Fig.2 Pressing bearing inner race off wheel hub

- Attach separating tool into circular groove of bearing inner race -arrow- and pre-tension with spindle.

Note:

Use commercially available separating device e.g. Kukko 15-17.

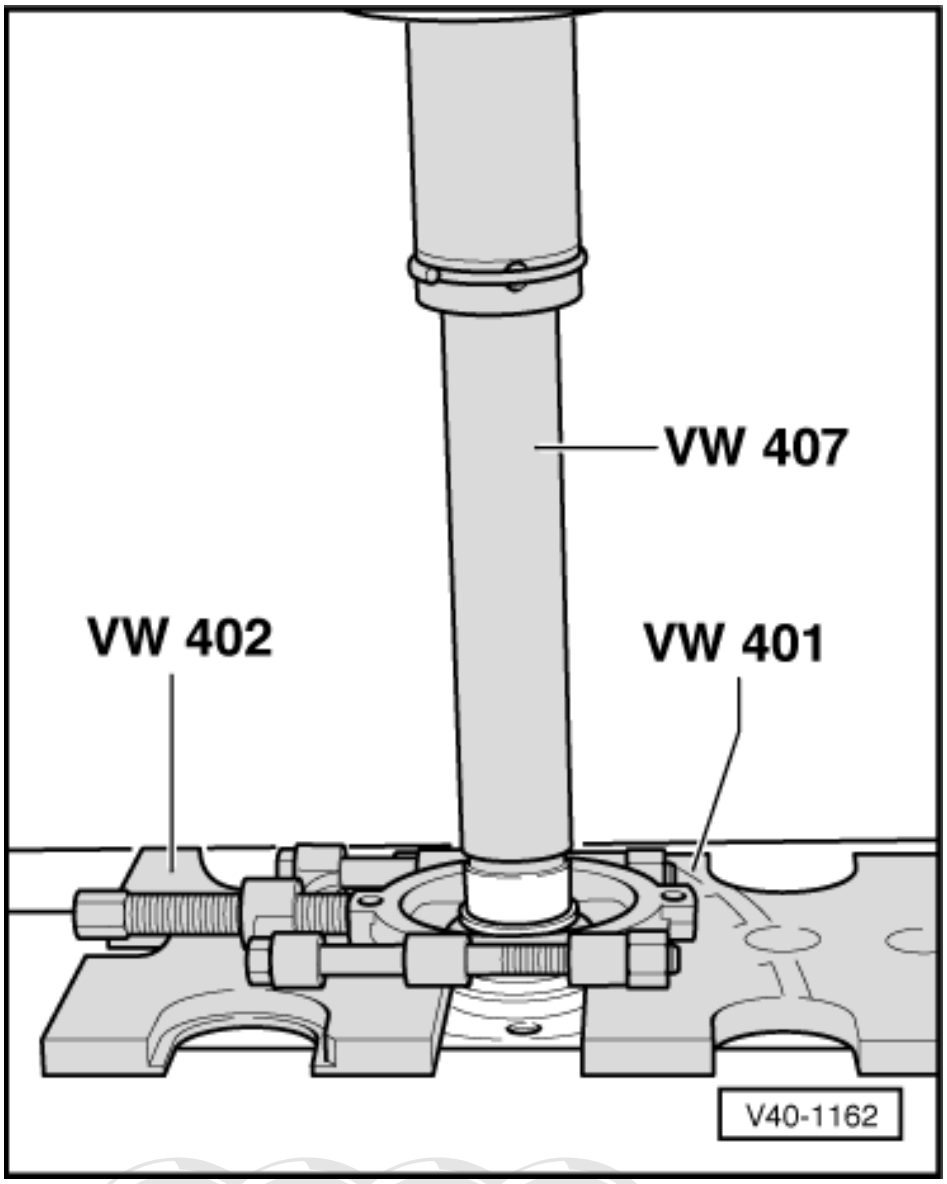

- -> Press bearing inner race from wheel hub.

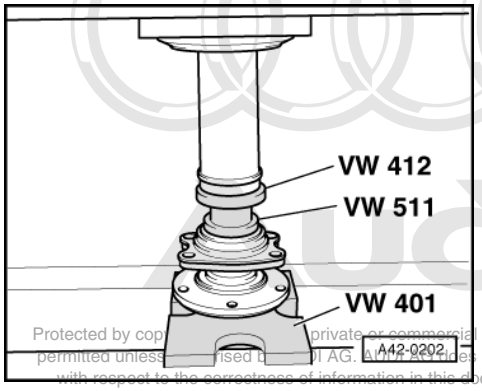

-> Fig.3 Pressing wheel hub into wheel bearing

- When pressing in, thrust pad -VW 511- must only make contact with inner race.

Installing

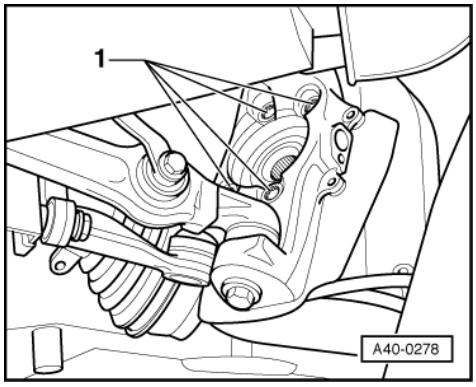

- -> Hemispherical collared bolt tightening torque -1-:
  80 Nm and turn +90° further
- Push outer joint of drive shaft into wheel hub and hand-tighten new hexagon bolt.

◆ Remove any adhesive residue from thread of joint pin.

- Insert both upper transverse link joint pins into wheel bearing housing.

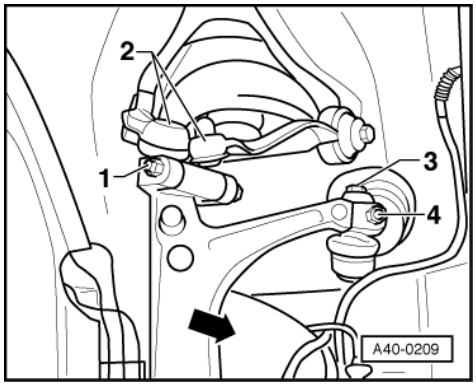

- -> Tighten new self-locking nuts -1- to 40 Nm.
  - When tightening, press down upper transverse link as far as possible.
- Install ABS speed sensor.

- Fit brake disc, bolt on brake caliper and tighten to 190 Nm.
- Fit wheel and tighten to 120 Nm.
- Tighten drive shaft hexagon bolt. Only tighten when vehicle is standing on wheels -danger of accident-.
  Tightening torques:
  Hexagon bolt, 190 Nm + 180° further turn

Note =>Page 83

The alignment of the front axle must be checked and if necessary adjusted using VW/Audi-approved wheel alignment equipment.

6 - Lightweight wheel hub

6.1 - Lightweight wheel hub

6.2 - Distinguishing features

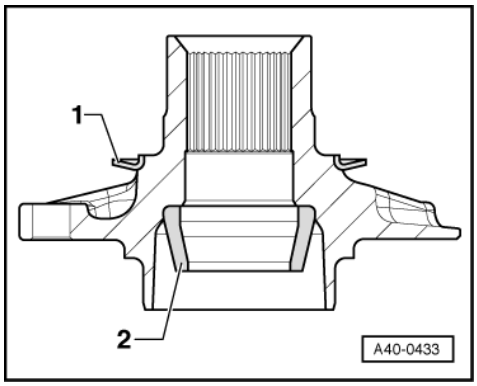

The lightweight wheel hub differs from conventional wheel hubs in its centrifugal disc -1- and sleeve -2-.
The lightweight wheel hub must only be used with the corresponding wheel bearings (see Parts Catalogue).
Lightweight wheel hubs must only be used on the vehicle if they were originally fitted in the factory.
The centrifugal disc becomes deformed when removing the wheel bearing and must therefore be renewed.

6.3 - Removing/Installing

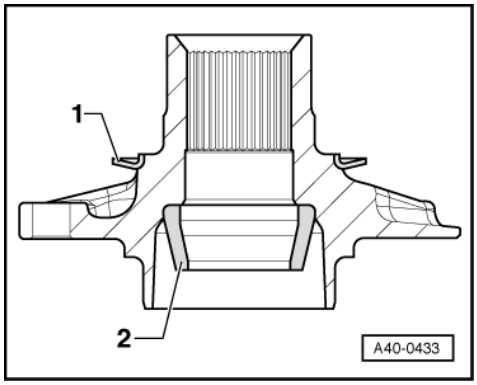

- -> Carefully lever off the old centrifugal ring -1-, e.g. using a screwdriver.

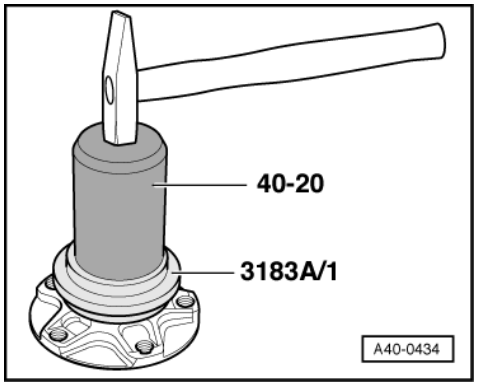

- Position the centrifugal disc on the wheel hub.
- -> Drive the centrifugal ring home as shown in the illustration.

Note:

The centrifugal disc must be flush with the wheel bearing flange.

7 - Removing and installing mounting bracket

7.1 - Removing and installing mounting bracket

- Remove suspension strut => Page 27

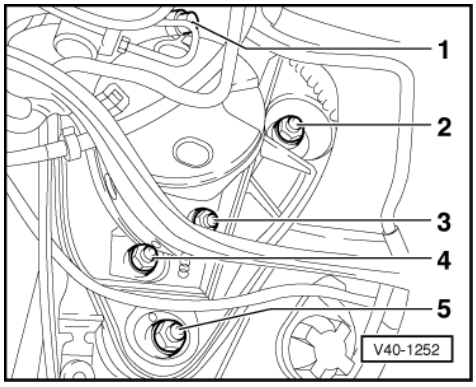

- -> Unscrew nuts 1 through 5.

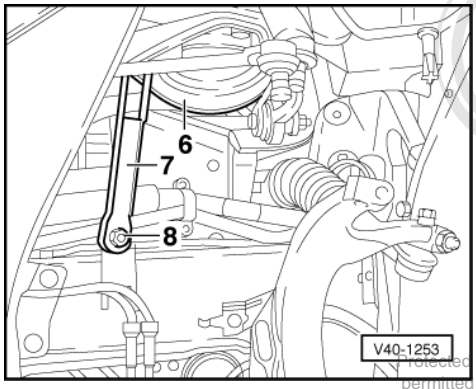

- -> Unscrew nut -8-, remove mounting bracket -6- and brace -7-.

Upon installation, pay special attention to the following:

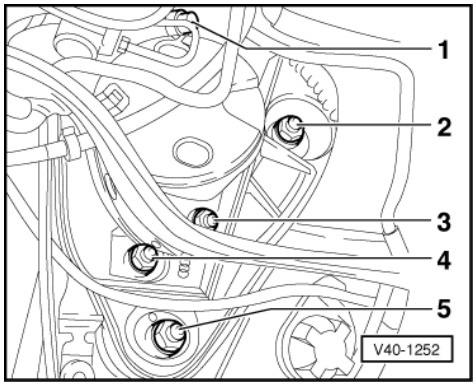

- -> Install studs -1- and -5- using guide sleeve.
- Ensure that these guide sleeves are correctly seated when inserting the bracket.

Notes:

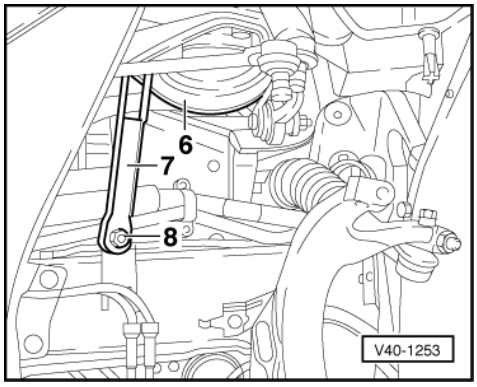

- -> From VIN 4DZ TN 006 420, the brace, Item -7- has been discontinued.
- The following applies to vehicles still equipped with the brace:

- The brace no longer needs to be installed.
- Bolt the mounting bracket to the body in place of the brace => Fig. 1
- Use the bolt and washer from Item 8 with a new nut for this purpose.

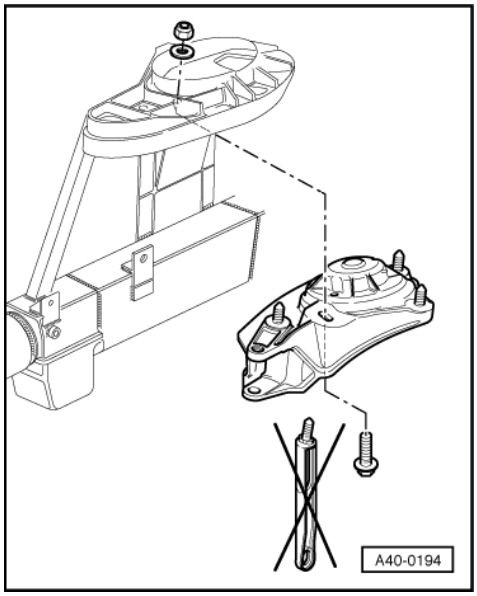

-> Fig.1 Brace discontinued

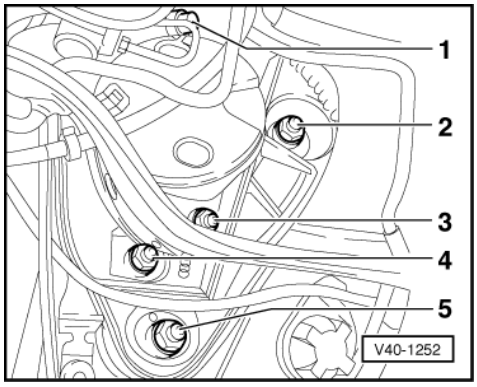

- -> Tighten nuts 1 through 5 to 100 Nm.
- Install suspension strut => Page 29

7.2 - Removing and installing upper link

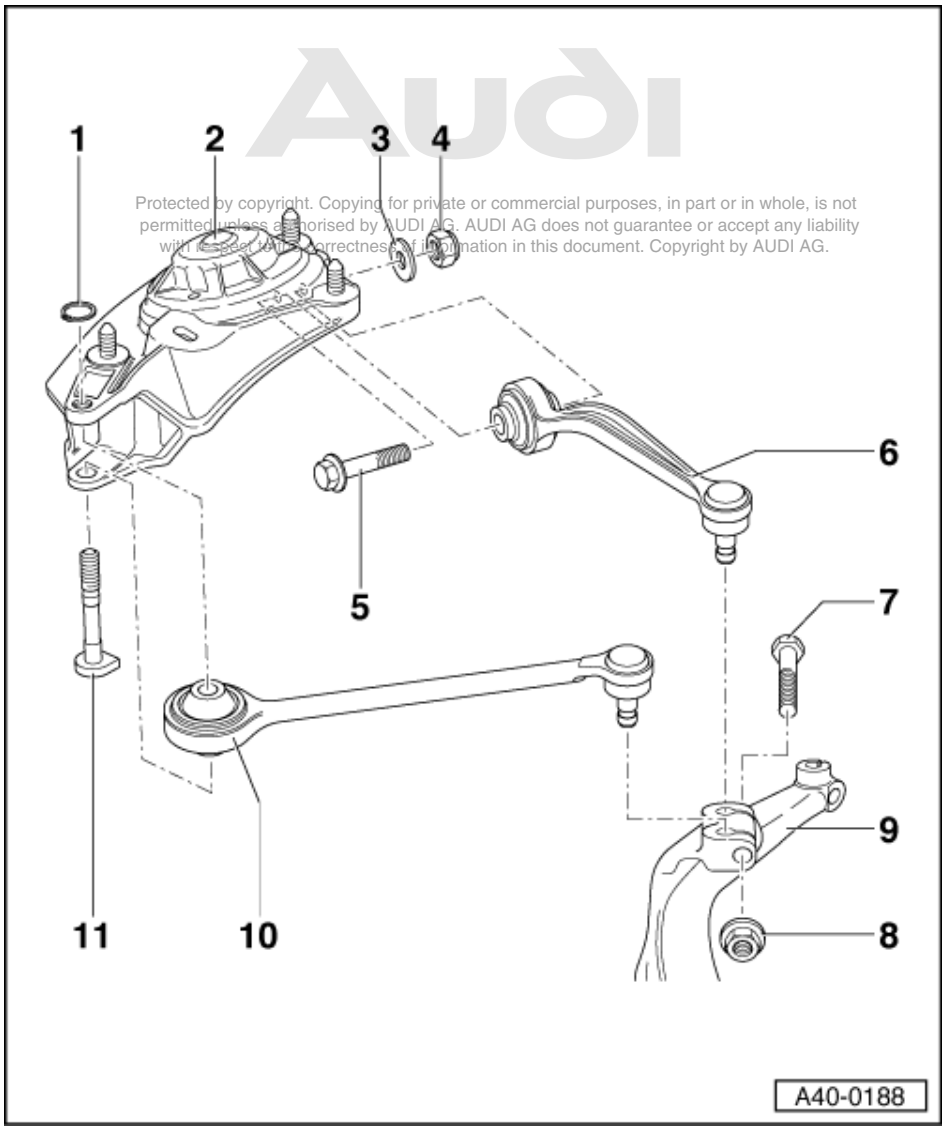

1 Circlip 12 *1
- Circlip used as an assembly aid during production, does not need to be reinstalled for repair

2 Bracket
- Removing and installing
  =>Page 55

3 Washer

4 Self-locking nut
- Always replace
- Tighten to 50 Nm and then give a further 90° turn

5 Hexagon bolt
- Always replace

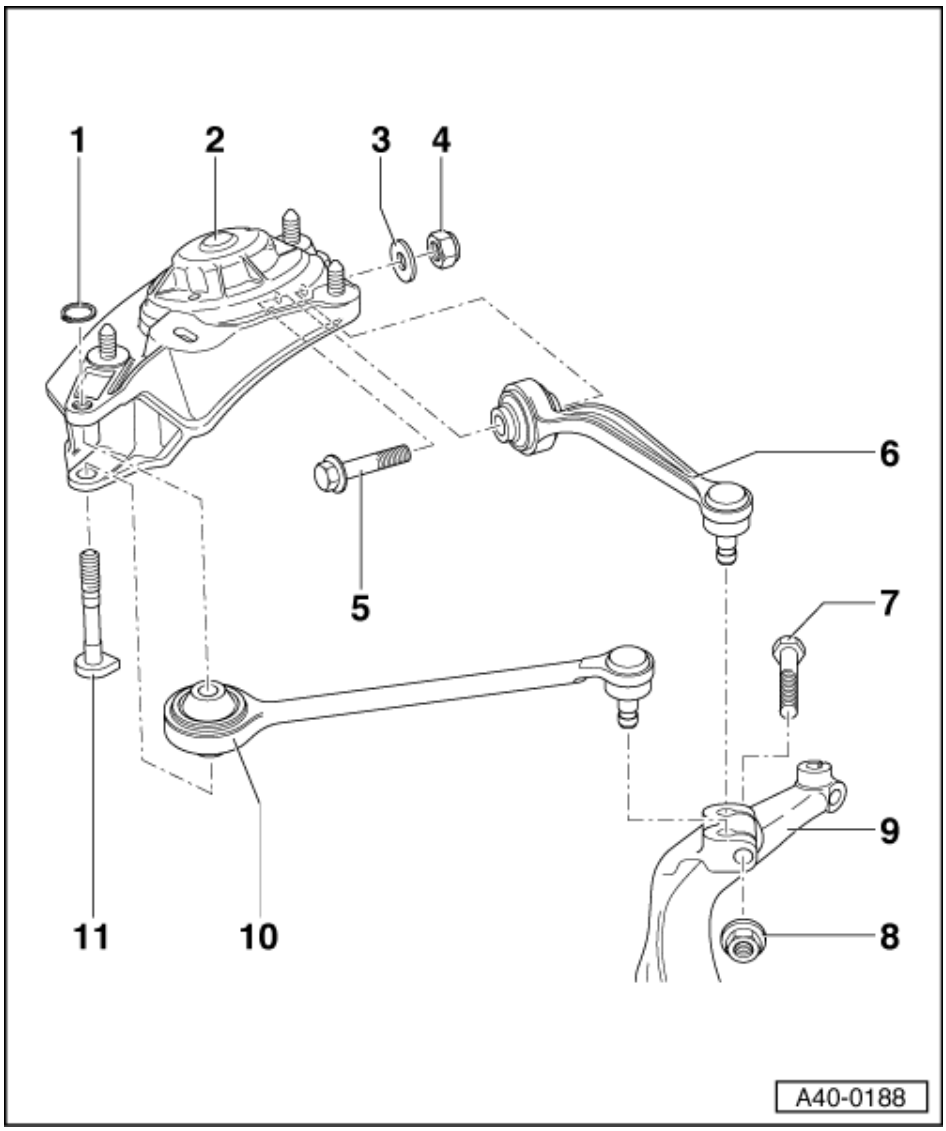

6 Upper rear link
- For removal, unscrew bolts -5- and -7-
- Installation position => Fig. 1
- Replacing bushes => Page 61

7 Hexagon bolt

8 Self-locking nut, 40 Nm
- Always replace

9 Wheel bearing housing
- For vehicles with headlight range control, refer to =>Page 70
- Removing and installing with pressed in wheel bearing=>Page 35 .
- Servicing with pressed in wheel bearing => Page 47
- Removing and installing with bolted wheel bearing=>Page 42
- Servicing with bolted wheel bearing => Page 39

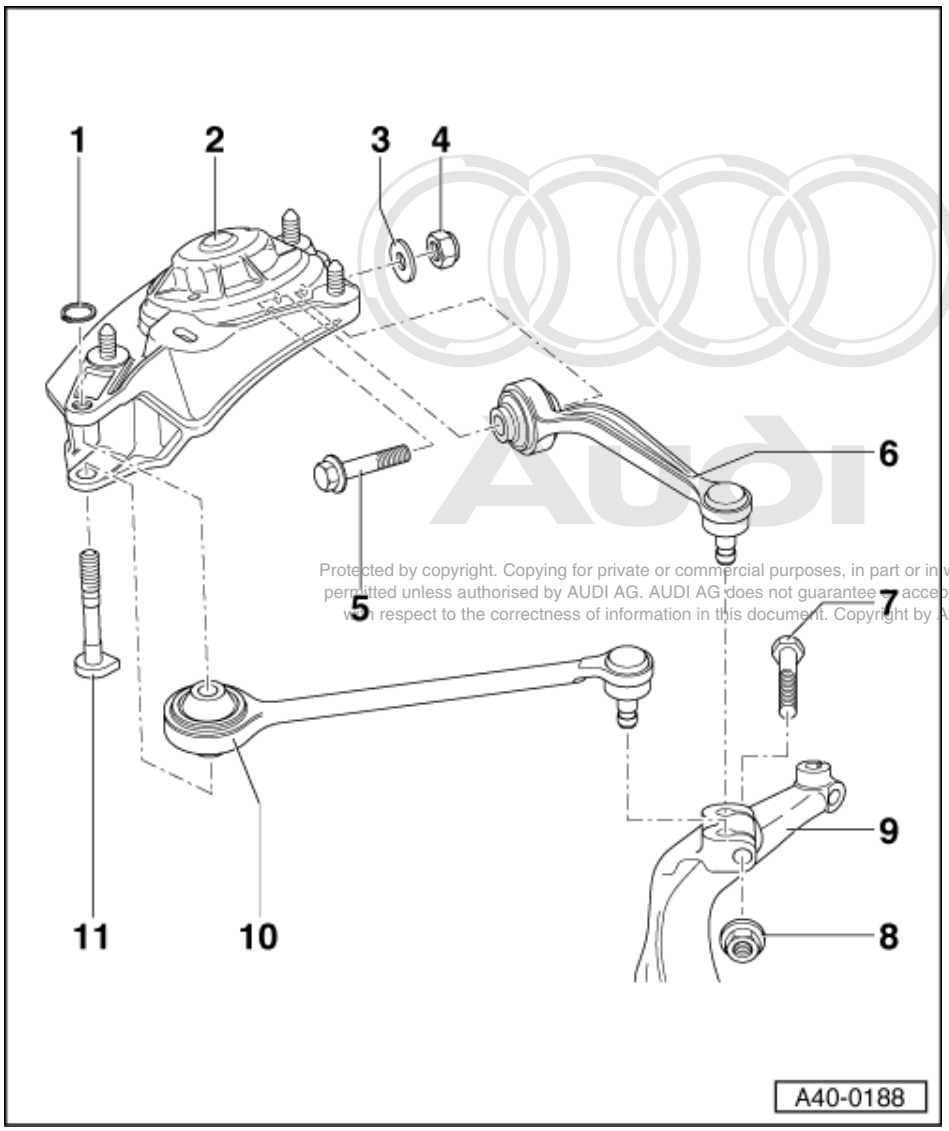

10 Upper front link

- Available as a steel or aluminium version
- Replacing bushes => Page 60
- To remove, first refer to:
- Removing suspension strut => Page 27 .
- Removing bracket => Page 55 .

If steel links are to be replaced using aluminium links, then replacement of the following components is necessary:

- Wheel housing liners
- Coolant expansion tank

Note Parts Catalogue.

11 Bolt

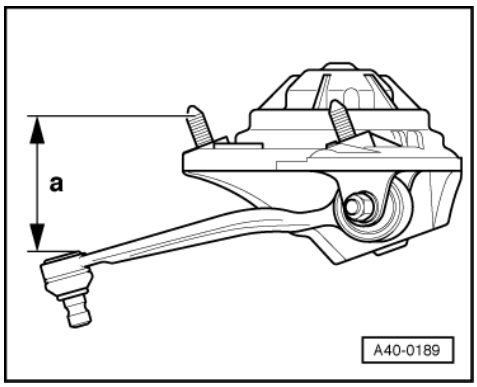

-> Fig.1 Installation position of rear link

Dimension a = 97 ± 2 mm

7.3 - Replacing bushes for front upper link

Note:

Bushes must be replaced on both sides of the vehicle up to vehicle identification number 4DZ XN 5 000

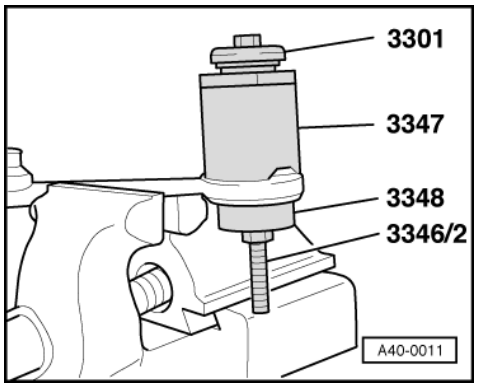

-> Fig.2 Pulling out bonded rubber bush

Note:

Always use soft jaws when clamping aluminium links.

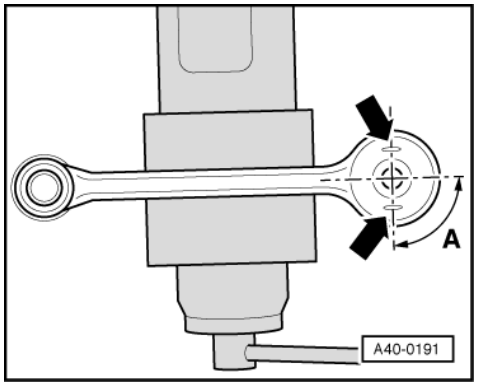

-> Fig.3 Installation position of bush in link

A = 90° ± 5°

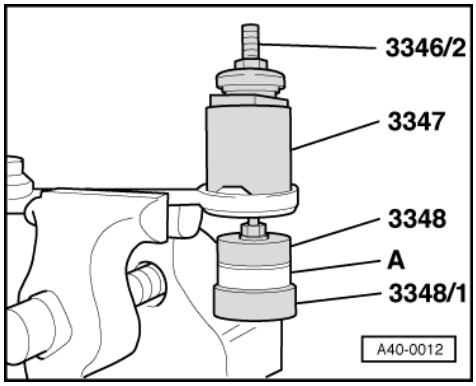

-> Fig.4 Pulling in bonded rubber bush

A = Bonded rubber bush

7.4 - Replacing bushes for rear upper link

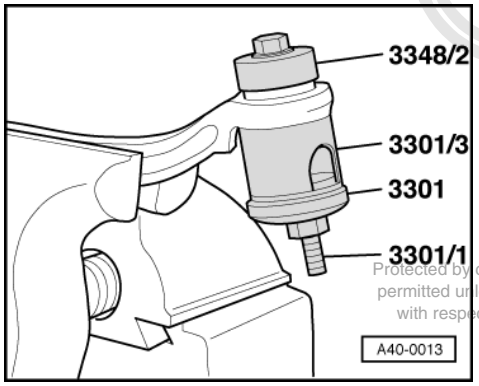

Note:

Bushes must be replaced on both sides of the vehicle up to vehicle identification number 4DZ XN 5 000

-> Fig.5 Pulling out bonded rubber bush

Note:

Always use soft jaws when clamping aluminium links.

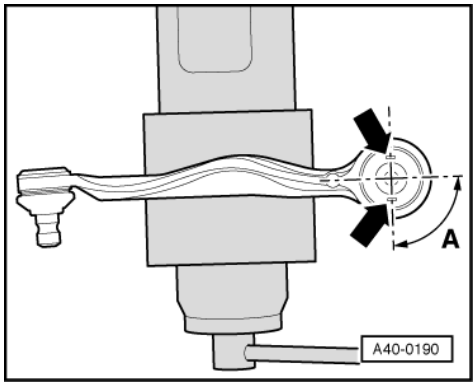

-> Fig.6 Installation position of bush in link

A = 90° ± 5°

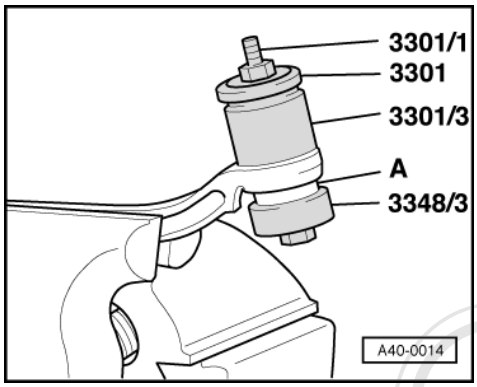

-> Fig.7 Pulling in bonded rubber bush

A = Bonded rubber bush

8 - Removing and installing subframe

8.1 - Removing and installing subframe

Removing

- Installing engine mount
  - On vehicles with 6-cyl. engine

=> Automatic Gearbox 01K and 01F, FWD and 4WD; Repair group 37; Gearbox, removing and installing Gearbox, removing and installing

  - On vehicles with 8-cyl. engine

=> Automatic Gearbox 018, 4WD; Repair group 37; ATF lines, removing and installing ATF lines, removing and installing

  - On vehicles with 12-cyl. engine

=> 12-cylinder Engine, Mechanical Components; Repair group 10

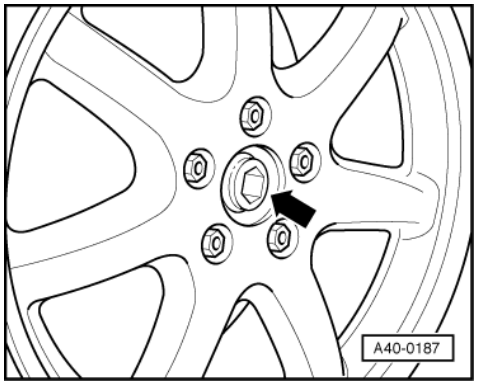

- Lever off disc wheel hub caps or pull off using suction puller -3208-.

- -> Loosen collared bolts and screw out approx. 10 rotations

Important Vehicle must be standing on wheels when unscrewing and tightening the collared bolt. -Risk of accident-

- Remove wheels.

- Remove engine noise insulation

=> 6-cylinder Engine, Mechanical Components; Repair group 26

=> 8-cylinder Engine, Mechanical Components; Repair group 26

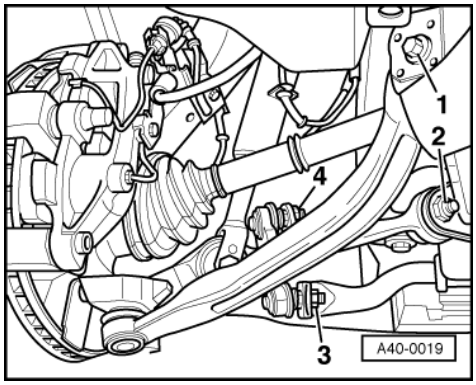

- -> Unscrew ribbed nuts -3- and -4- and remove connecting link.
- Loosen guide link combi bolts -1-.
- Unbolt the track control link from the subframe -2-.

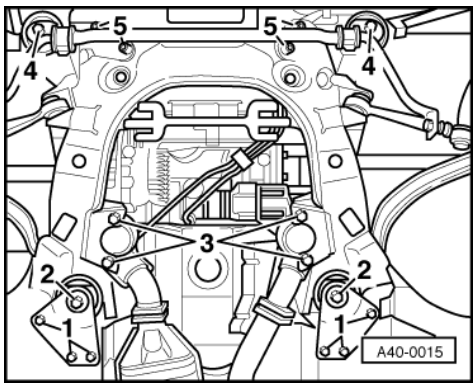

- The subframe must be lowered at the rear in order to remove the guide link combi bolts.
- -> For this purpose, unscrew hexagon bolts -1- for support plates and subframe bolts -2-.

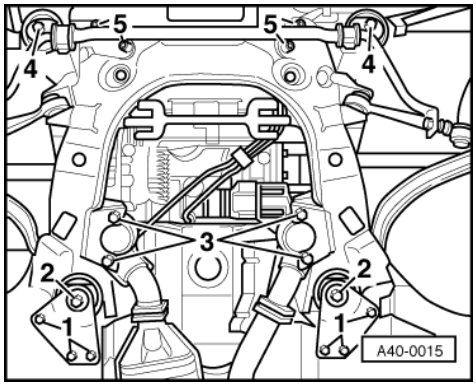

Important
For safety reasons, the gearbox must be supported during this operation (using e.g. -V.A.G

- -> Unscrew hexagon bolts -3-.
- Unscrew hexagon socket head bolts -5-.
- Unscrew hexagon bolts -4-.
- Remove subframe.

Upon installation, pay special attention to the following:
- The arrow on the connecting link points in the direction of travel.
- Bonded rubber bushes can only be twisted to a limited extent. The bolted connections on the suspension links should therefore only be tightened once the vehicle is standing on the ground.

Note:
Perform wheel alignment after completing repair => Page 212 .
Tightening torques:
- Always replace subframe bolts and washers: 150 Nm and turn further 90°.
- Guide link and track control link to subframe: 90 Nm and turn 90° further.

Note the changed connecting link and tightening torque =>Page 81 .
- The arrow on the connecting link points in the direction of travel.
- Support plate hexagon bolts, 25 Nm.
- Engine mount hexagon socket head bolts, 40 Nm.
- Gearbox mount hexagon bolts, 40 Nm.

8.2 - Replacing subframe bushes

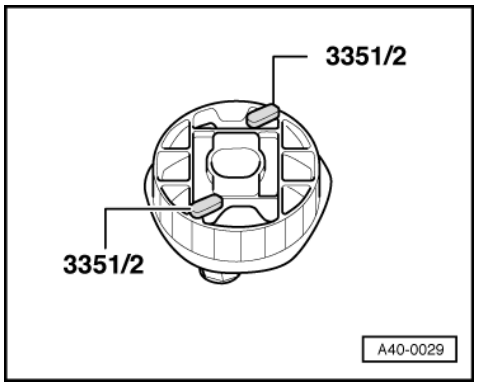

-> Fig.1 **Pulling out bonded rubber bush**

Note:
For ease of illustration, insertion of the special tool is shown on a bonded rubber bush that has already been removed.
- Insert both hooks -3351/2- into the bonded rubber bushes.

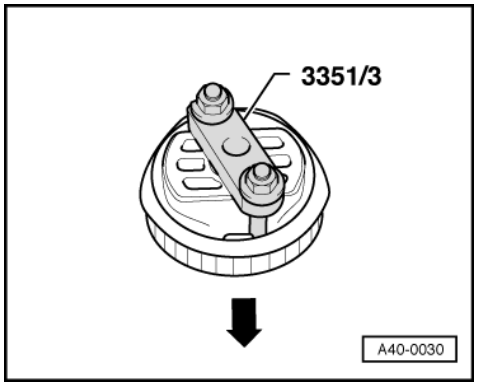

-> Fig.2 Pulling out bonded rubber bush

- Bolt bridge -3351/3- to hooks -3351/2- and hexagon nuts supplied.

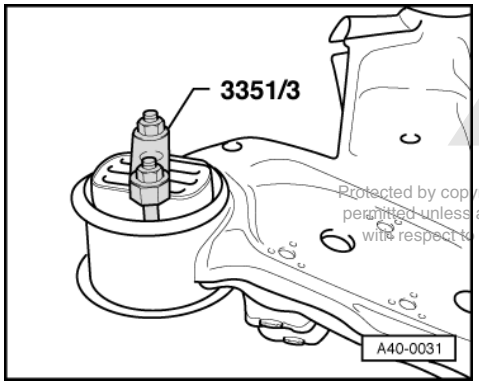

-> Fig.3 Pulling out bonded rubber bush

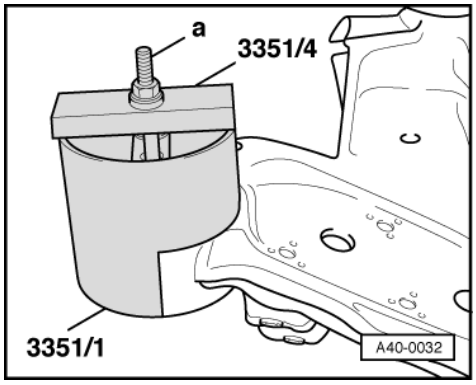

-> Fig.4 Pulling out bonded rubber bush

a =Hexagon bolt, M12*90*1.5

- Position tool -3351/1- on subframe.
- Push bolt -a- through bush, bridge, and crossmember -3351/4-, then bolt together.
- Pull out one side of the bonded rubber bush by rotating the threaded spindle -a-.

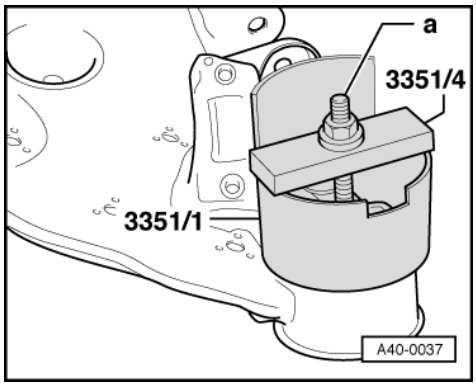

-> Fig.5 Pulling out bonded rubber bush

- Turn subframe.

Note:

Install special tool -3351/2- and -3351/3- as shown in Fig. 1 and Fig. 2 .

a =Hexagon bolt, M12*90*1.5

- Position tool -3351/1- on subframe.
- Push bolt -a- through bush, bridge, and crossmember -3351/4-, then bolt together.
- Pull out the other side of the bonded rubber bush by rotating the threaded spindle -a-.

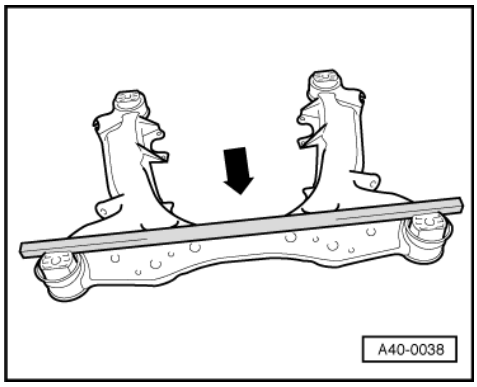

-> Fig.6 Aligning bonded rubber bushes

- Subframe faces in direction of travel.
- Arrows on bonded rubber bushes must point towards direction of travel.
- The bushes must be aligned using a long square section tube or a straightedge.

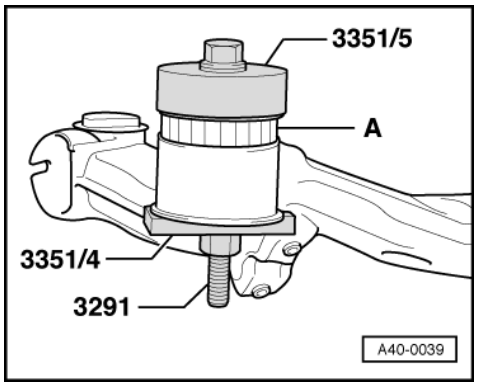

-> Fig.7 Pulling in bonded rubber bush

- Clamp together bonded rubber bush -A-, crossmember -3351/4- and threaded spindle -3291- using special tool -3351/5.
- Pull in bonded rubber bush by rotating threaded spindle -3291-.

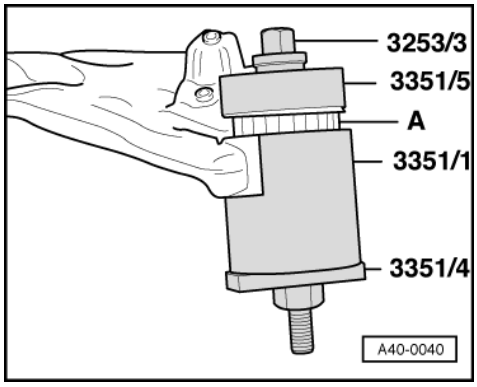

-> Fig.8 Pulling in bonded rubber bush

- Turn subframe.
- Align bonded rubber bushes as shown in Fig. 6 .
- Pull in bonded rubber bush by rotating threaded spindle -3253/3- up to stop.

9 - Removing and installing track control link

9.1 - Removing and installing track control link

For vehicles with headlight range control, refer to =>Page 69 .

Removing

- Remove wheel.

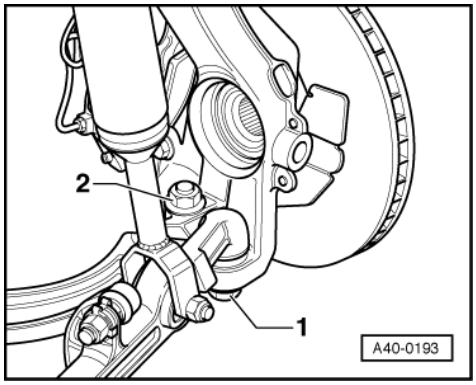

- -> Unbolt collared nut-1- from track control link joint pin.

Note:

For ease of illustration, the drive shaft is not shown.

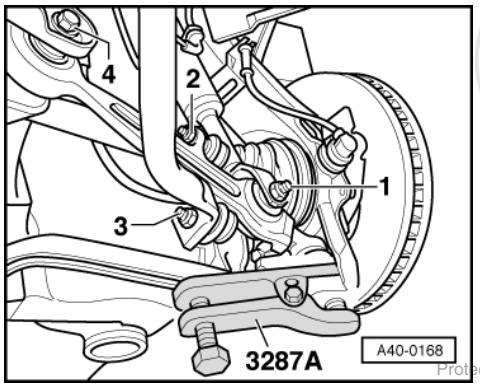

- -> Press joint pin out of tapered seat using special tool.

Note:

Protect the boot from damage, e.g. use a leather cloth.

To unscrew the hexagon bolt from the suspension strut/track control link, the guide link must first be detached from the wheel bearing housing.

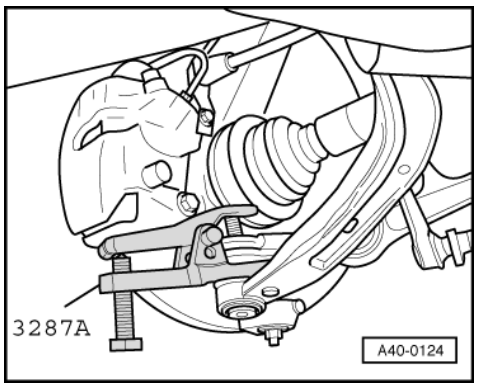

Counterhold joint pin using 4 mm Allen wrench if necessary.

- In vehicles with aluminium wheel bearing housing, note removal and installation of guide link Page => 78
- -> Unscrew nut from guide link joint pin and press off joint pin.

  Do not damage boot in the process.

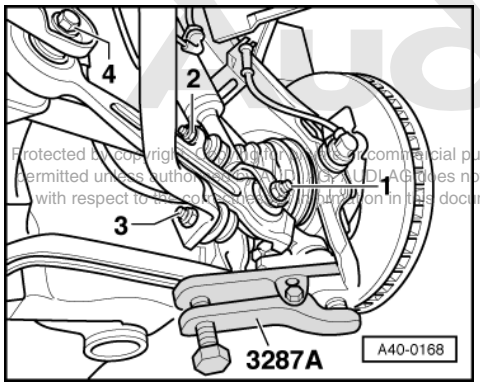

- -> Unscrew suspension strut from track control link-1-.
- Remove ribbed nuts -2- and -3- and remove connecting link.
- Unbolt the track control link from the subframe -4-.
- Lift the wheel bearing housing and remove the track control link.

When installing, pay special attention to the following:

- The arrow on the connecting link points in the direction of travel.
- Bonded rubber bushes can only be twisted to a limited extent. The subframe/track control link bolted connection should therefore only be tightened once the vehicle is standing on the ground.

Tightening torques:

- Track control link to wheel bearing housing, 100 Nm.
- Shock absorber to track control link, 90 Nm.
- Connecting link to anti-roll bar 90 Nm
  Always use new ribbed nut
- Connecting link to track control link 70 Nm
  Always use new ribbed nut
- Track control link to subframe: 90 Nm and turn further 90°.

9.2 - Removing and installing headlight range control

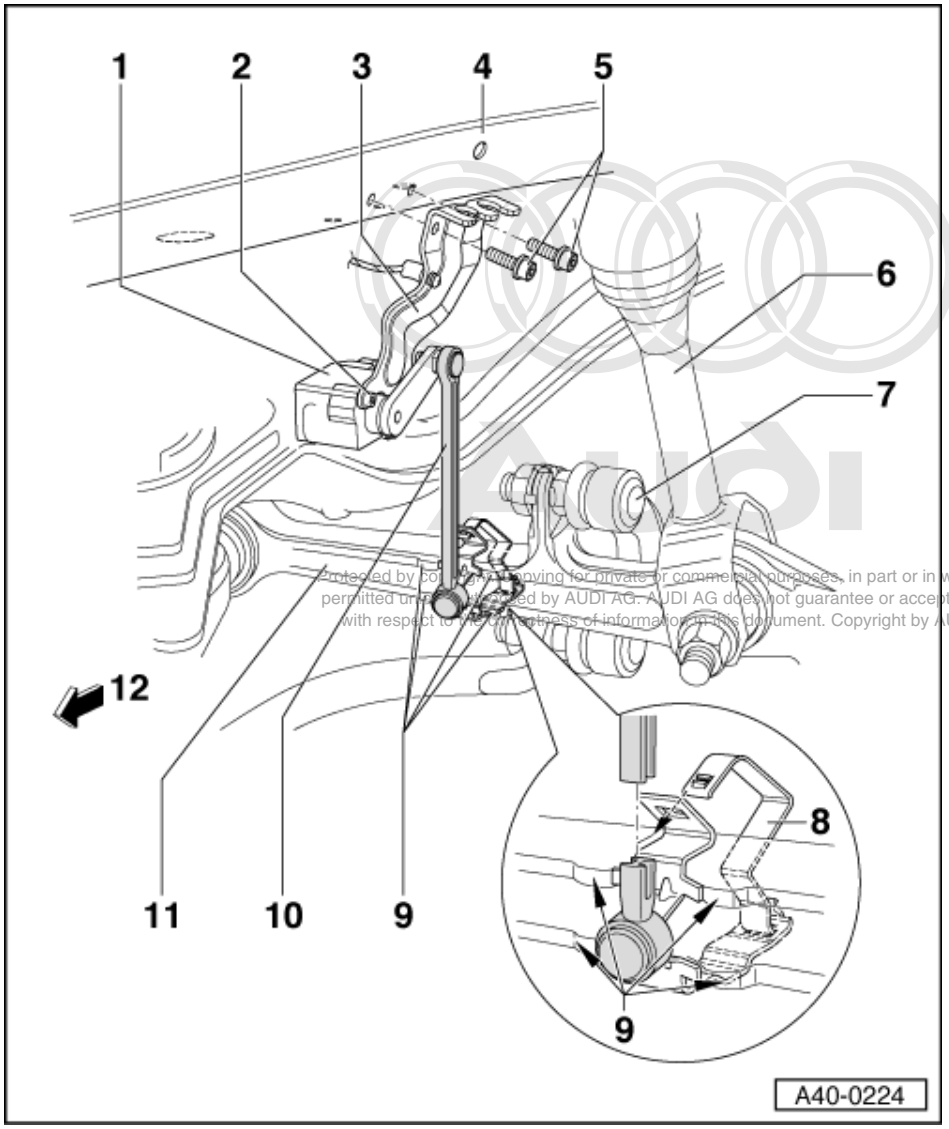

1 Level sensor
2 Hexagon socket head bolt, 4 Nm
3 Bracket
4 Front longitudinal member
5 Hexagon socket head bolt, 8 Nm
6 Suspension strut
- Removal of the suspension strut requires opening the metal clip, Item 8 .

7 Connecting link
8 Clamp
- Lever out using flat-bladed screwdriver or pliers

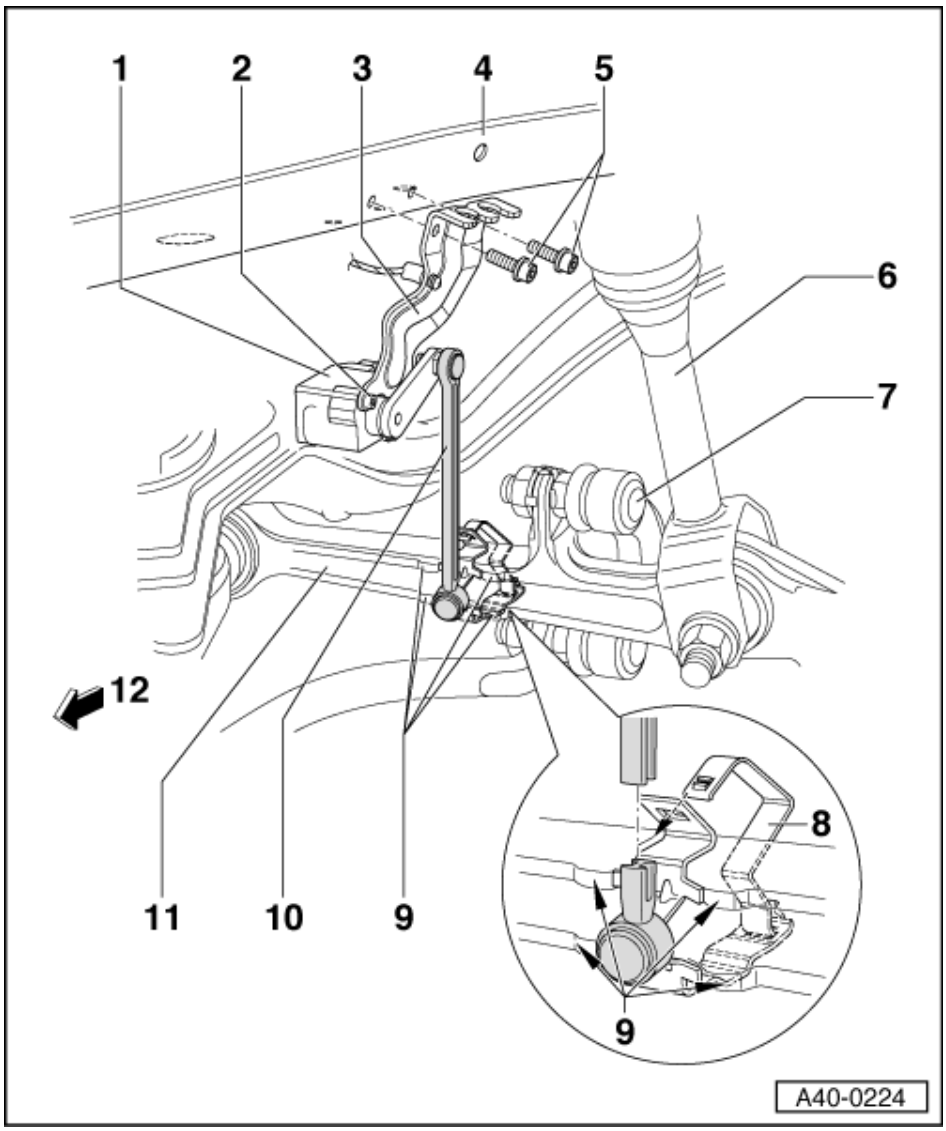

9 Track control link positioning marks
- Position clip between marks

10 Connecting link to levelling sensor
- Removing =>Fig. 9

11 Track control link
- Removal of the track control link requires opening the metal clip, Item 8 .

12 Direction of travel

Removal of the track control link or the suspension strut requires opening the metal clip.

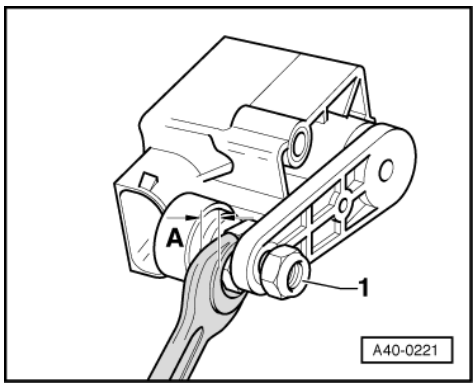

-> Fig.9 Connecting link to levelling sensor

Note:

When attaching the connecting link to the level sensor, use an open-ended wrench (wrench size 9) with a dimension -A- of 4 mm to avoid damaging the gasket.

Tightening torques:

Item 1: 3 Nm

Upon installation, ensure the sensor crank and linkage are correctly positioned in relation to one another.

- The connecting link must be vertical.
- Sensor crank (arm) must face rearwards and upwards.

9.3 - Replacing bush for track control link

Notes:

- Always replace bushes on both sides of the vehicle.

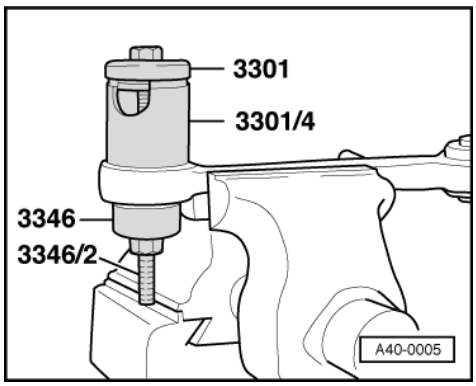

- Always use soft jaws when clamping aluminium links.

-> Fig.1 Pulling out inner bonded rubber bush

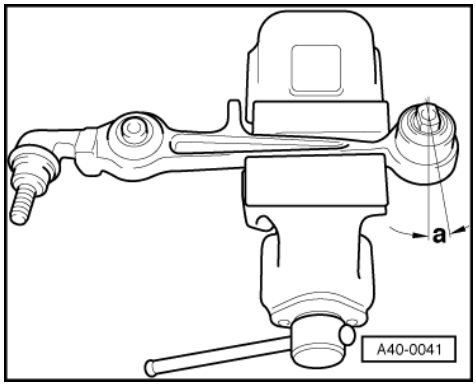

-> Fig.2 Installation position

Dimension a = 6° ±3°

Note:

Mark the installation position before pulling in the bearing.

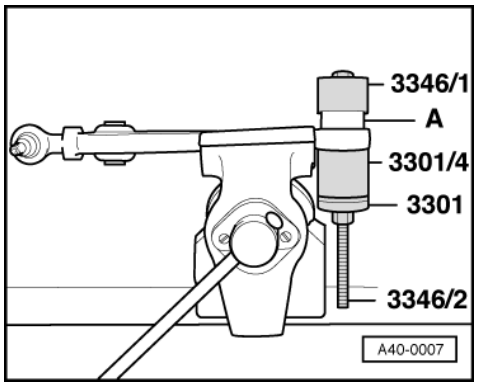

-> Fig.3 Pulling in bonded rubber bush

- Insert bush in 3.2 mm recess of thrust pad -3346/1-.
- Pull bush in up to stop.

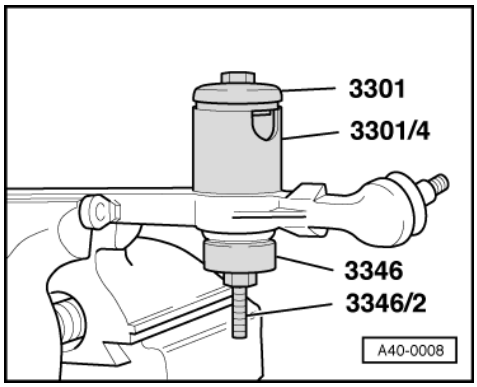

-> Fig.4 Pulling out outer bonded rubber bush

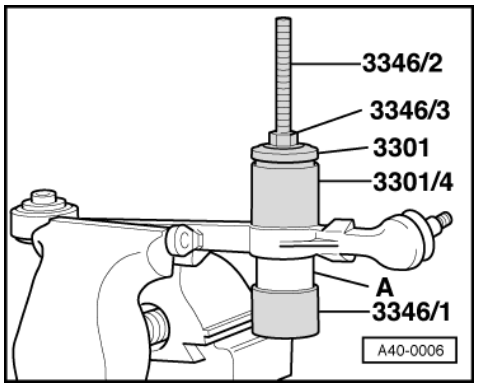

-> Fig.5 Pulling in outer bonded rubber bush

- Insert bush in 8.25 mm recess of thrust pad -3346/1-.

- Pull bush in up to stop.

10 - Removing and installing track control link (aluminium wheel bearing housing)

10.1 - Removing and installing track control link (aluminium wheel bearing housing)

Removing

- Remove wheel trim; on light-alloy wheels, detach cover cap (puller in vehicle tool kit).
- Remove wheel.

For vehicles with headlight range control, refer to =>Page 69 .

- Secure brake disc with a wheel bolt.

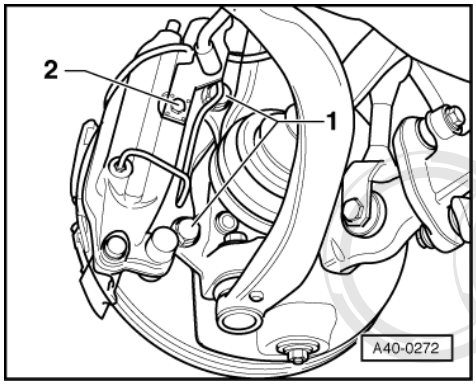

- Unscrew hexagon bolt -2-.
- Pull ABS speed sensor wiring out of retainer on wheel bearing housing.
- -> Remove bolts -1- for brake caliper and remove brake caliper.
- Tighten hexagon bolt -2-.

Note:

The brake caliper must not be reattached to e.g. the body before the brake line holder has not yet been bolted on using bolt -2-.

- Secure brake caliper to body.

Notes:

- Protect the boot from damage, e.g. use a leather cloth.

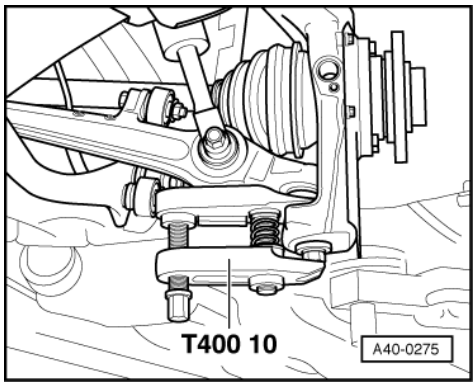

- For safety reasons, refit collared nut on joint pin of track control link and tighten by approx. 4 turns.

- Ensure that the two lever arms are parallel to each other when the greatest force is exerted. If necessary, readjust.

- -> Press joint pin of track control link off tapered seat.

To unscrew the hexagon bolt from the suspension strut/track control link, the guide link must first be detached from the wheel bearing housing.

Counterhold joint pin using 4 mm Allen wrench if necessary.

- Unbolt nut from track control link joint pin.

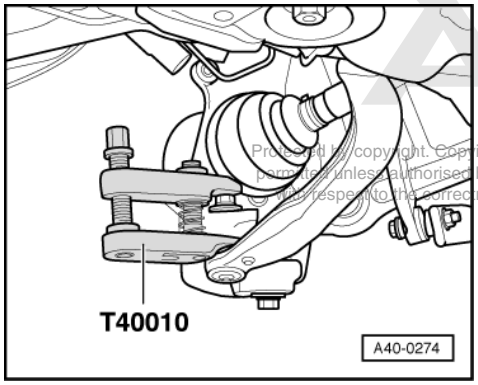

Note:

- For safety reasons, refit collared nut on joint pin of track control link and tighten by approx. 4 turns until flush.
- Ensure that the two lever arms are parallel to each other when the greatest force is exerted. If necessary, readjust.

- -> Unscrew nut from guide link joint pin and press off joint pin.

Do not damage boot in the process.

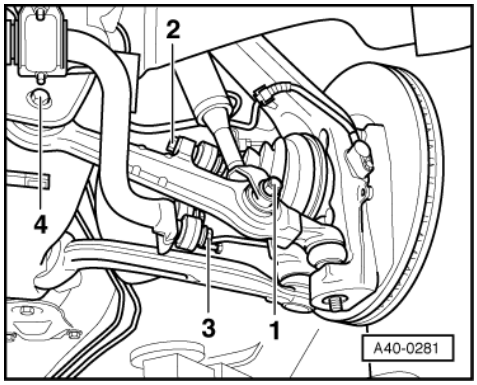

- -> Unscrew hexagon bolt -1-.
- Remove ribbed nuts -2- and -3- and remove connecting link.

Fit a support device (e.g. engine/gearbox jack V.A.G 1383-A) to prevent damage to the upper link joints resulting from excessive rebound.

- Unscrew hexagon bolt -4-.
- Remove track control link.

Installing

- Always replace nuts and bolts.

- Bonded rubber bushes can only be twisted to a limited extent. The bolted connections on the suspension links should therefore only be tightened once the vehicle is standing on the ground.

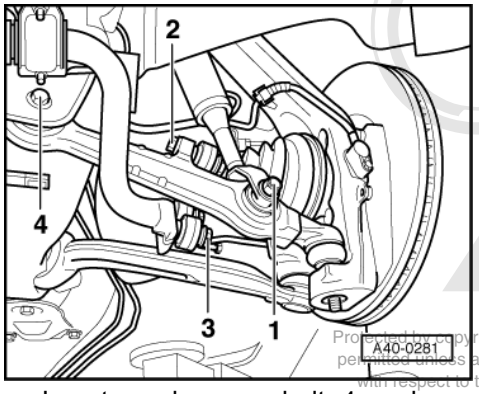

- Insert new hexagon bolt -4- and new hexagon nut.
  - Tighten to 90 Nm + 90°.
- -> Tighten nuts on joint pins (guide link/track control link) to 125 Nm.
- Tighten hexagon nut -1- to 90 Nm.

Note the changed connecting link and tightening torque =>Page 81

- The arrow on the connecting link points in the direction of travel.
- Tighten nut -2- to 40 Nm + 90°.
- Tighten nut -3- to 60 Nm.
- Install brake disc, bolt on brake caliper and tighten to 190 Nm (M14x1.5x38).

11 - Removing and installing guide link

11.1 - Removing and installing guide link

Removing

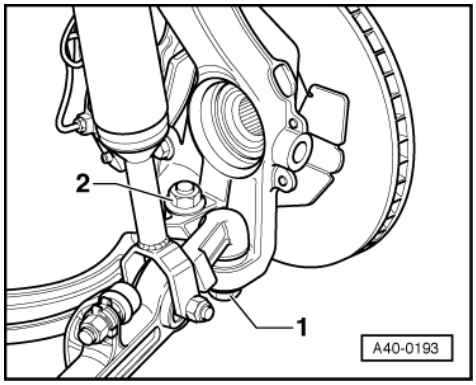

- Remove wheel.
- -> Unscrew collared nut -2- from guide link joint pin.

Note:

For ease of illustration, the drive shaft is not shown.

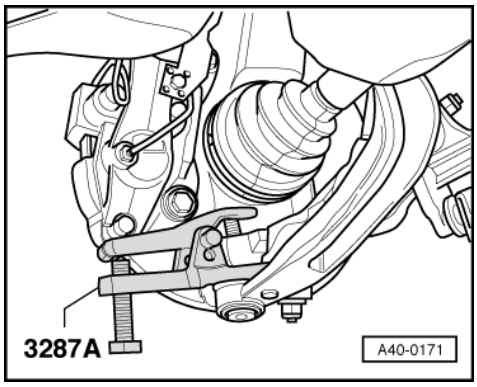

- -> Press joint pin out of tapered seat using special tool.

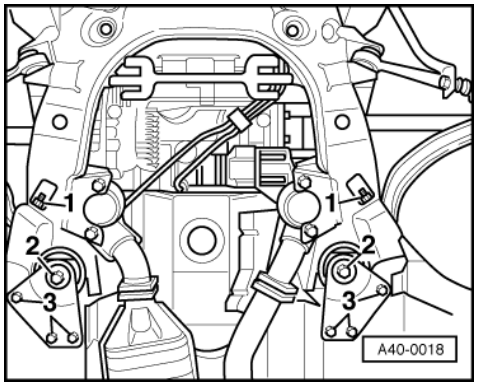

- -> Unscrew guide link from subframe -1-.
- The subframe must be lowered at the rear in order to retrieve the guide link combi bolt.
- For this purpose, unscrew hexagon bolts -3- for support plates and subframe bolts -2-.

When installing, pay special attention to the following:

- Bonded rubber bushes can only be twisted to a limited extent. The subframe/guide link bolted connection should therefore only be tightened when the vehicle is standing on the ground.

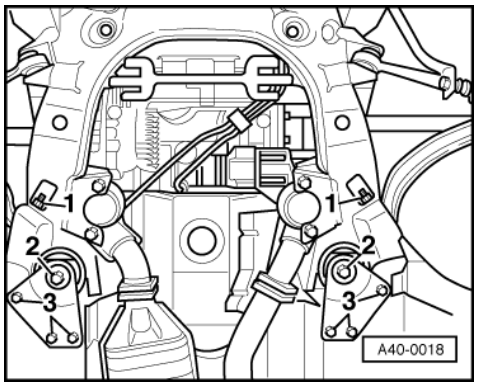

Tightening torques:

- Guide link to wheel bearing housing, 100 Nm.
- -> Guide link -1- to subframe: 90 Nm and turn further 90°.
- Always replace subframe bolts and washers: 150 Nm and turn further 90°
- Support plate hexagon bolts -3-, 25 Nm.

11.2 - Replacing hydraulic bush for guide link

Notes:

- Always replace bushes on both sides of the vehicle.

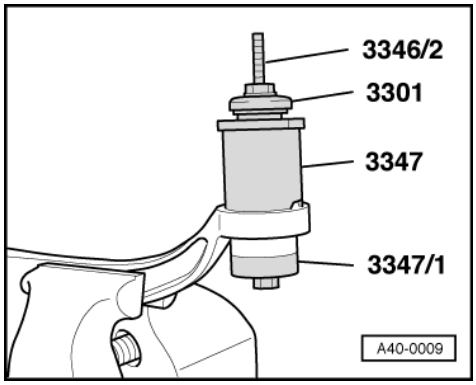

- Always use soft jaws when clamping aluminium links.

-> Fig.1 Pulling out hydraulic bush

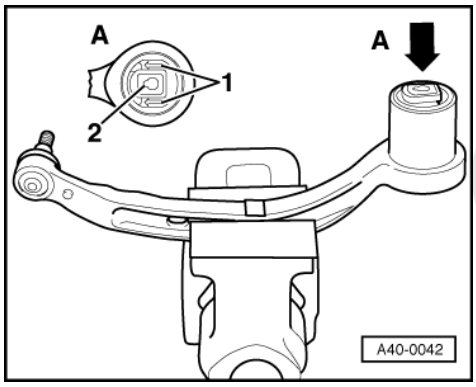

-> Fig.2 Installation position

- The arrows -1- and groove -2- on the bush point to the outer joint.
- The permissible deviation is ± 5°.

Note:

Mark the installation position before pulling in the bush.

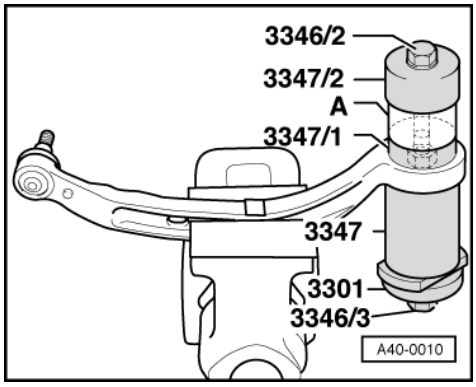

-> Fig.3 Pulling in hydraulic bush

- Insert bush -A- into special tool -3347/2-, then clamp together using -3347/1-, spindle -3346/2- and hexagon nut.
- Pull bush in up to stop.

12 - Removing and installing track control link (aluminium wheel bearing housing)

12.1 - Removing and installing track control link (aluminium wheel bearing housing)

Removing

- Remove wheel trim; on light-alloy wheels, detach cover cap (puller in vehicle tool kit).
- Remove wheel.
- Secure brake disc with a wheel bolt.

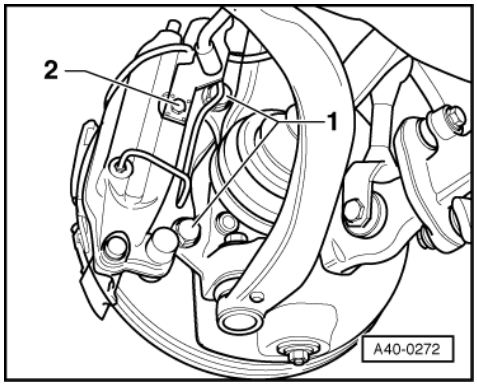

- Unscrew hexagon bolt -2-.
- Pull ABS speed sensor wiring out of retainer on wheel bearing housing.
- -> Remove bolts -1- for brake caliper and remove brake caliper.
- Tighten hexagon bolt -2-.

Note:

The brake caliper must not be reattached to e.g. the body before the brake line holder has not yet been bolted on using bolt -2-.

- Secure brake caliper to body.

  Counterhold joint pin using 4 mm Allen wrench if necessary.

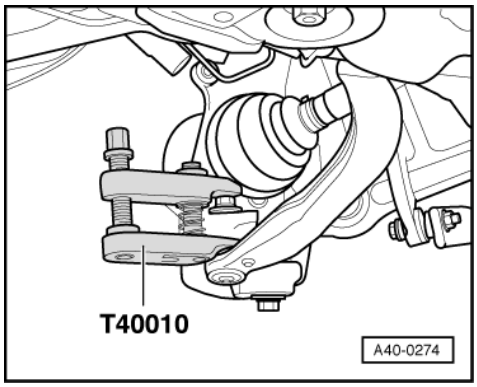

- Unbolt nut from track control link joint pin.

Note:

- For safety reasons, refit collared nut on joint pin of track control link and tighten by approx. 4 turns until flush.

- -> Unscrew nut from guide link joint pin and press off joint pin.

  Do not damage boot in the process.

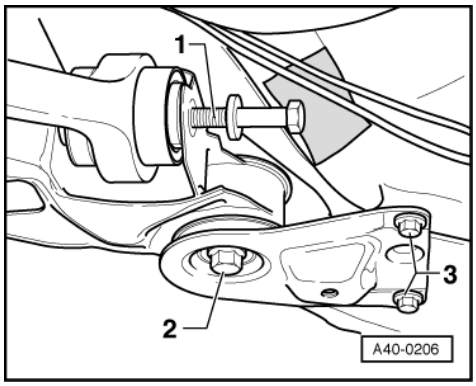

- -> Unscrew hexagon bolt -1-.

  Ensure that surface of the brake lines and underseal is not damaged.

- Lower sub-frame at rear if necessary.
- Unscrew hexagon bolts -2- and -3-.
- Remove guide link.

Installing

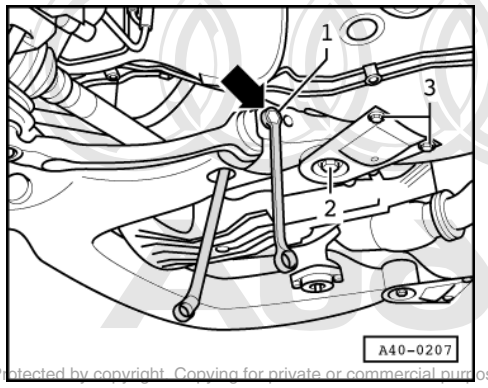

- Bonded rubber bushes can only be twisted to a limited extent. The bolted connections on the suspension links should therefore only be tightened once the vehicle is standing on the ground.
- Always replace nuts and bolts.
- -> Tighten nut on joint pin to 125 Nm.
  - Tighten to 90 Nm + 90°.
  - Tighten Item -2- to 150 Nm + 90°.
- Tighten hexagon bolts -3.-
  - Tighten to 23 Nm (3x).
- Install brake disc, bolt on brake caliper and tighten to 190 Nm (M14x1.5x38).

13 - Removing and installing anti-roll bar

13.1 - Removing and installing anti-roll bar

Removing

- Remove engine noise insulation

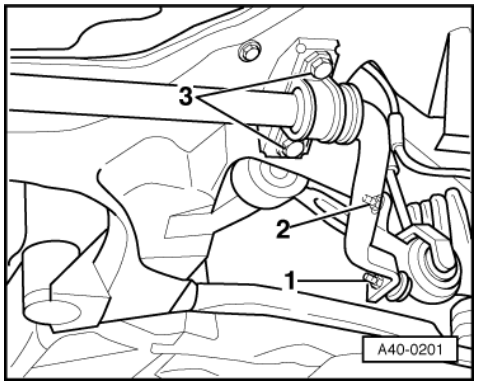

- -> Unscrew ribbed nuts -1- and -2-, remove connecting link.
- Unscrew hexagon bolts -3-.

When installing, pay special attention to the following:

- The arrow on the connecting link points in the direction of travel.

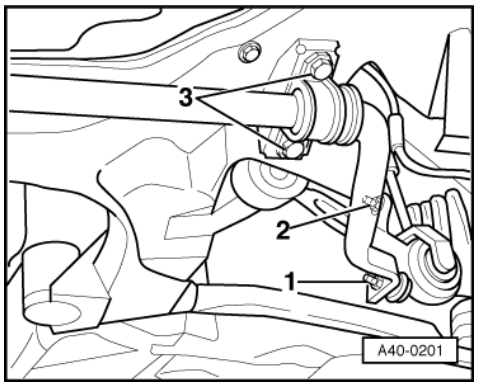

- -> The bolts -3- are micro- encapsulated Adhesive residue remain inside the internal threads after removal of bolts. Internal threads must therefore be cleaned.
- When replacing the anti-roll bar, note running gear version => Page 25
- Install bush and anti-roll bar, without applying grease.

Tightening torques:

- Connecting link to anti-roll bar 90 Nm
  Always use new ribbed nut
- Connecting link to track control link 70 Nm
  Always use new ribbed nut
- Hexagon bolts -3-, 20 Nm.

13.2 - As from model year 99, the connecting link with ball joint has been replaced by the connecting link with rubber bush

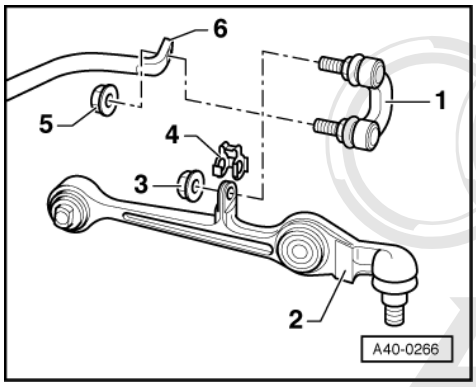

Connecting link with ball joint

- -1- Connecting link with ball joint
- -2- Track control link
- -3- Self-locking hexagon nut:
  40 Nm and turn 90° further
- -4-Clamps
- -5- Self-locking hexagon nut 90 Nm
- -6- Anti-roll bar

Connecting link with rubber bush

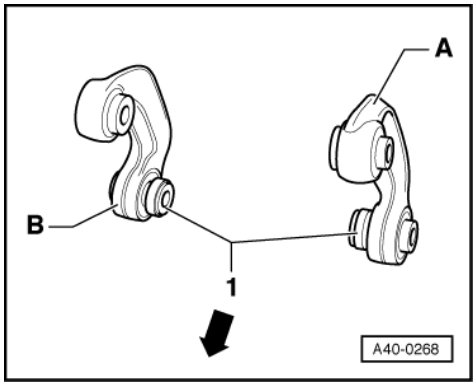

- -> Connecting link -A- for the left side of vehicle

Arrow on connecting link points in direction of travel

- Permanently fixed spacer disc -1- on the connecting link must be fitted to the anti-roll bar
- Connecting link -B- for the right side of vehicle

Arrow on connecting link points in direction of travel

Arrow faces in direction of travel.

Bonded rubber bushes can only be twisted to a limited extent. The bolted connections on the suspension links should therefore only be tightened once the vehicle is standing on the ground.

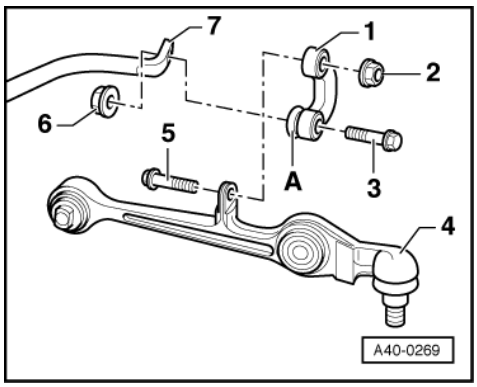

- -> -1- connecting link with rubber bush
  Rubber bush with pressed-on spacer disc, Item -A-, is bolted to anti-roll bar
- -2- Self-locking hexagon nut:
  40 Nm and turn 90° further
- -3- Hexagon bolt
- -4- Track control link
- -5- Hexagon bolt
- -6- Self-locking hexagon nut 60 Nm
- -7- Anti-roll bar

14 - Removing and installing drive shaft

14.1 - Removing and installing drive shaft

Removing

- Remove wheel trim; on light-alloy wheels, detach cover cap (puller in vehicle tool kit).
- Unscrew hexagon bolt for drive shaft. (Loosen only when vehicle is standing on wheels -danger of accident-).
- Raise vehicle

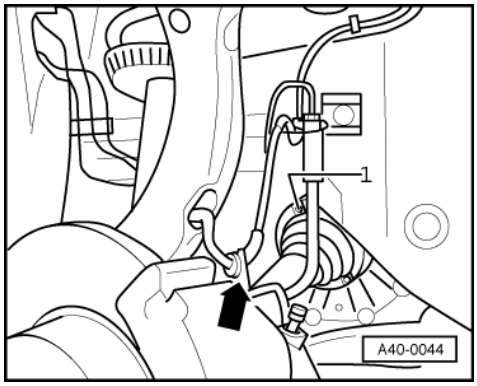

- Remove wheel.
- Unscrew hexagon bolt for drive shaft (2nd mechanic operates brakes).
- Unbolt drive shaft from flange shaft/gearbox.

1 - Hexagon socket head bolts

- -> Pull ABS speed sensor wiring out of retainer on brake caliper -arrow-.
- Pull ABS speed sensor slightly out of wheel bearing housing.

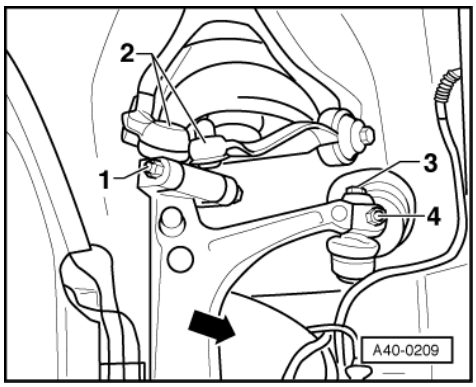

- -> Unscrew nut -1-, remove hexagon bolt and pull out both links -2- in upwards direction.

The slots in the wheel bearing housing must not be widened using a chisel or similar.

Note:

- Do not unscrew bolts -3- and -4- as this would affect the front axle alignment.

- Swing aside wheel bearing housing in direction of arrow.
- Remove drive shaft.

Installing:

- Insert drive shaft into wheel bearing housing and bolt to gearbox shaft.
- Insert both links at top, tighten nut to 40 Nm.

  Press links as far as possible towards wheel bearing housing while tightening.

- Bolt drive shaft to gearbox.
  Tightening torques:
  M8 = 40 Nm, M10 = 70 Nm.
- Push ABS speed sensor up to stop in wheel bearing housing and insert cable in retainer on brake caliper.
- Tighten hexagon bolt to 190 Nm (2nd mechanic operates brakes).
- Fit wheel.
- Tighten drive shaft hexagon bolt. Only tighten when vehicle is standing on wheels -danger of accident-.
  Turn the M16 hexagon bolt through a further + 180°.

14.2 - Servicing drive shafts with triple roller joint AAR 2900

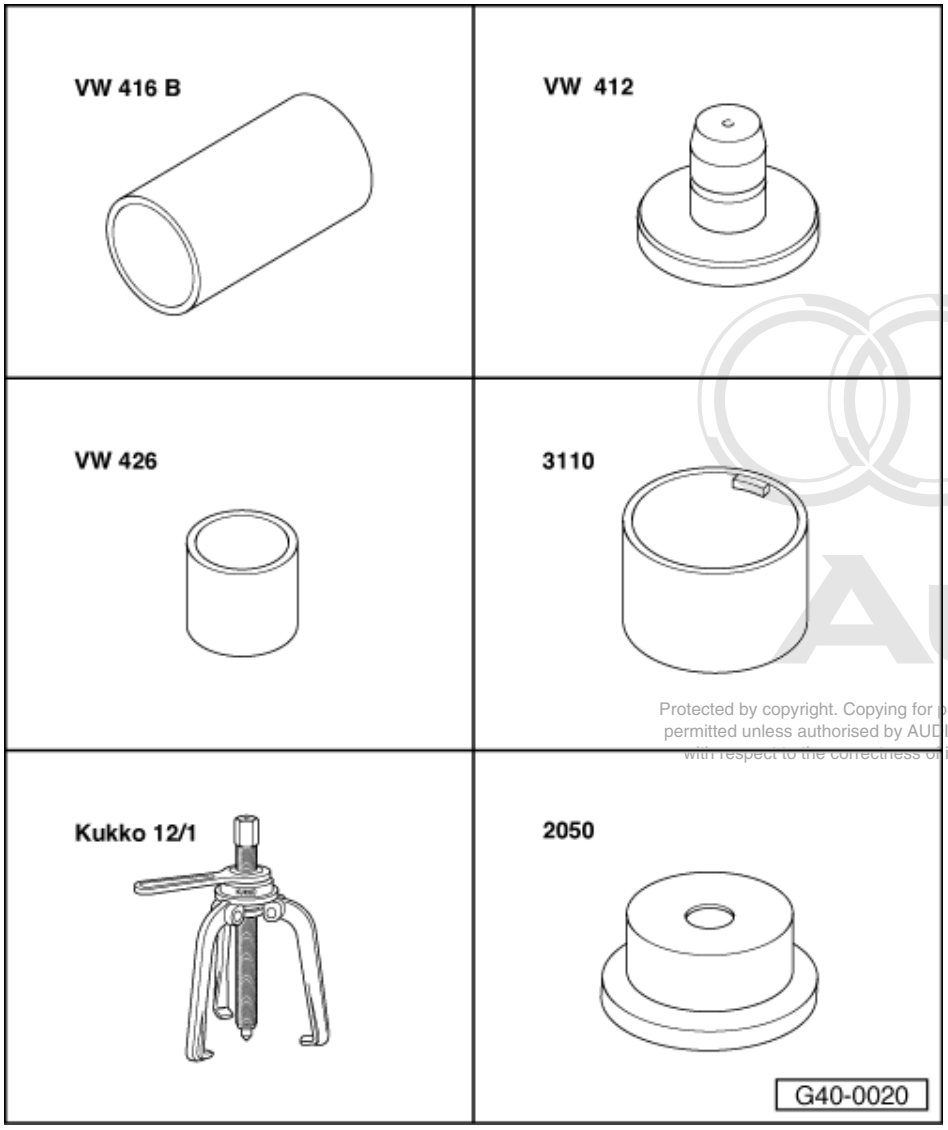

Special tools and workshop equipment required

- VW 416b Tube
- VW 412 Press tool
- VW 426 Tube
- 3110 Tube
- Kukko 12-1 Puller tool
- Matra 2050 Thrust pad

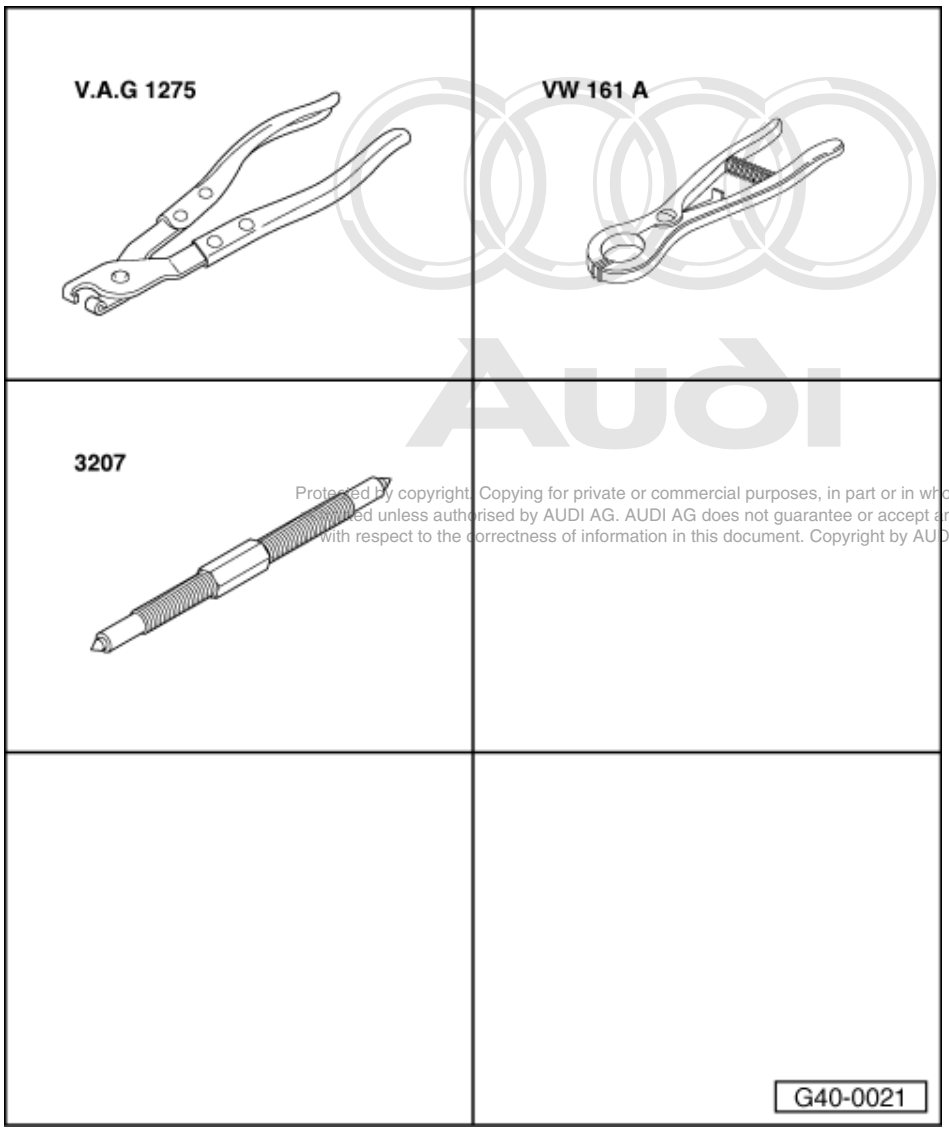

- V.A.G 1275 Pliers
- VW 161A circlip pliers
- 3207 Pressure spindle

14.3 - Servicing drive shaft with triple roller joint

Allocation and grease filling of triple roller joint shaft:

Outer joint:

- ø 98 mm G 000 633

Triple roller joint:

- G 000 605

Outer joint	Grease Total quantity	of which in: Joint	Boot
ø mm	[g]	[g]	[g]
98	120	80	40

Outer joint	Grease Total quantity	of which in: Joint	Boot
Inner joint			
100	80	30	50

Regrease joint as necessary when replacing the boot.

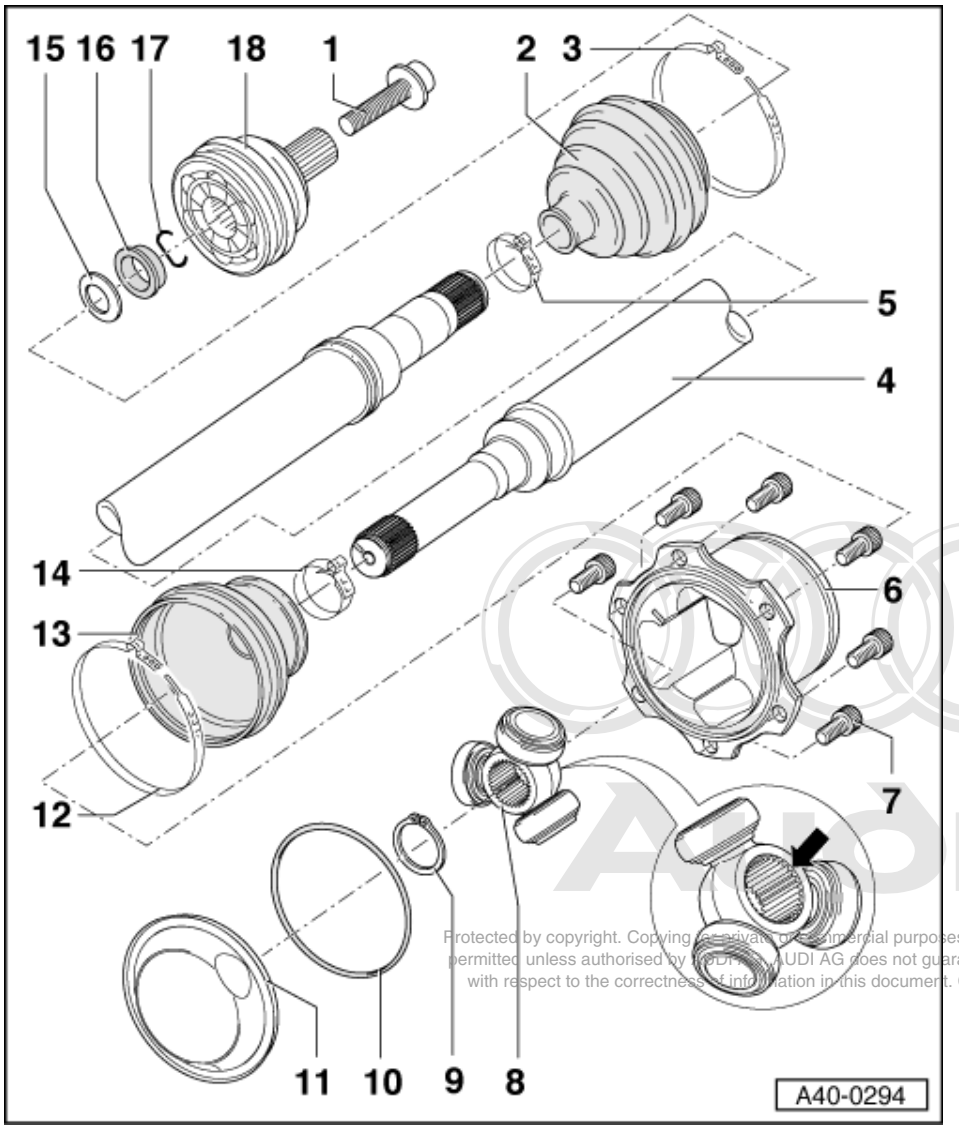

1 Hexagon bolt
- Renew each time after removing
  Vehicle must be standing on the ground when tightening this bolt.
  Tightening torques:
  Bolt M16:
- 190 Nm and turn further 180°
- Note =>Page 82

2 Boot for outer constant velocity joint
- Check for cracks and abrasion
- To equalise the pressure, briefly lift boot before tensioning clamp
  =>Fig. 3
- Different versions made of rubber or hytrel

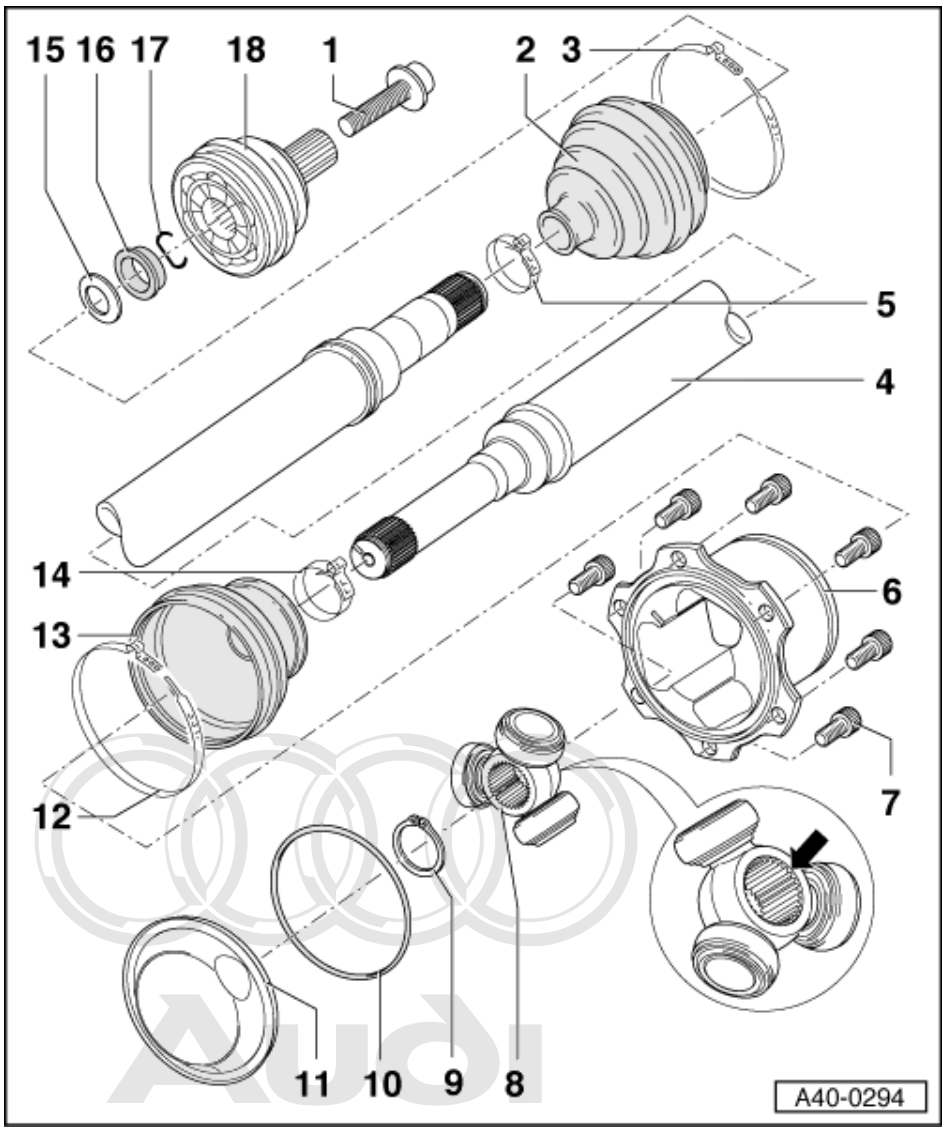

3 Clip
- Different versions for boot in rubber or hytrel
- Replace
- Tensioning => Page 90

4 Drive shaft

5 Clip
- Replace
- Tensioning => Page 90

6 Joint

7 Multi-point socket-head bolt
- M10x20; 70 Nm

8 Triple roller star

The chamfer -arrow- faces splines of drive shaft
- Installation position => Page 94

9 Circlip
- Replace
- Insert in shaft groove

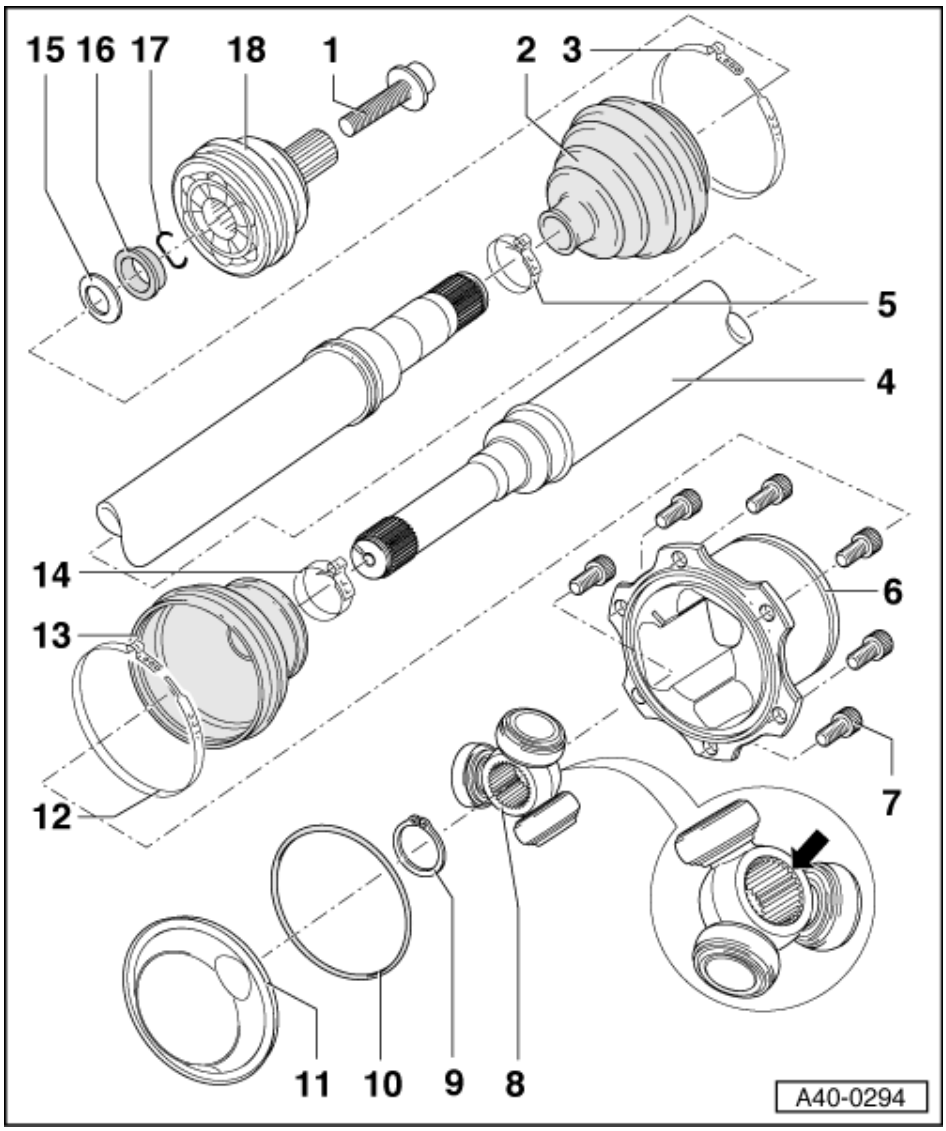

10 O-ring

A new sealing ring is included in the repair kit and must be replaced.

11 Cover

- Always replace
  Destroyed during removal
  A modified cover is contained in the repair set.

12 Clip

- Always replace
- Tensioning => Fig. 1
- Different clamps are possible according to build version.
  May also be assembled using pliers 3340 => see Parts Catalogue.

13 Tripod boot

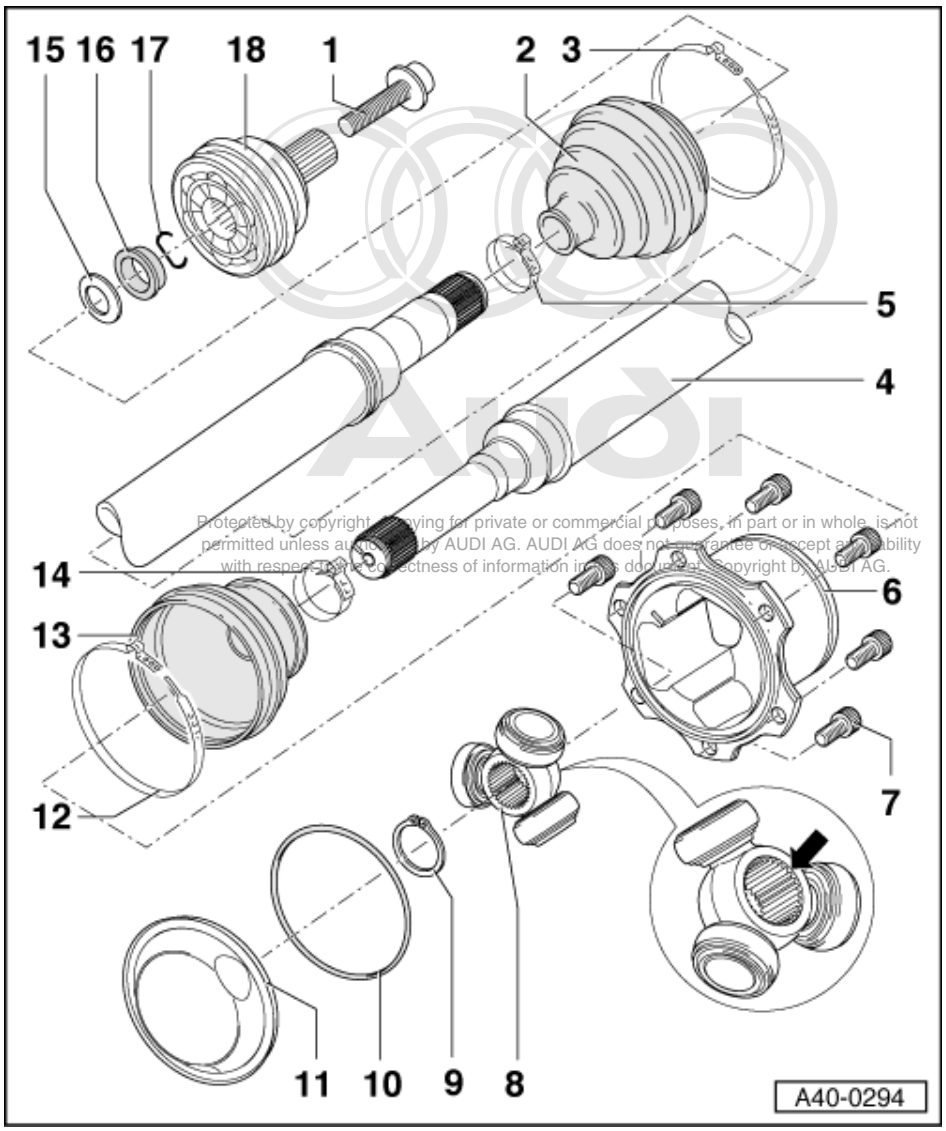

14 Clip
- Always replace
- Tensioning => Fig. 1

15 Dished washer
- Installation position => Fig. 4

16 Spacer (plastic)
- Installation position => Fig. 4 .

17 Circlip
- Always replace
- Fit into circular groove on shaft before installing (no longer visible once joint is installed)

18 Outer constant velocity joint
- Replace only as complete unit
- Pressing off =>Fig. 2
- Installing:
- Drive joint onto shaft with plastic hammer until circlip engages
- Greasing => Page 85

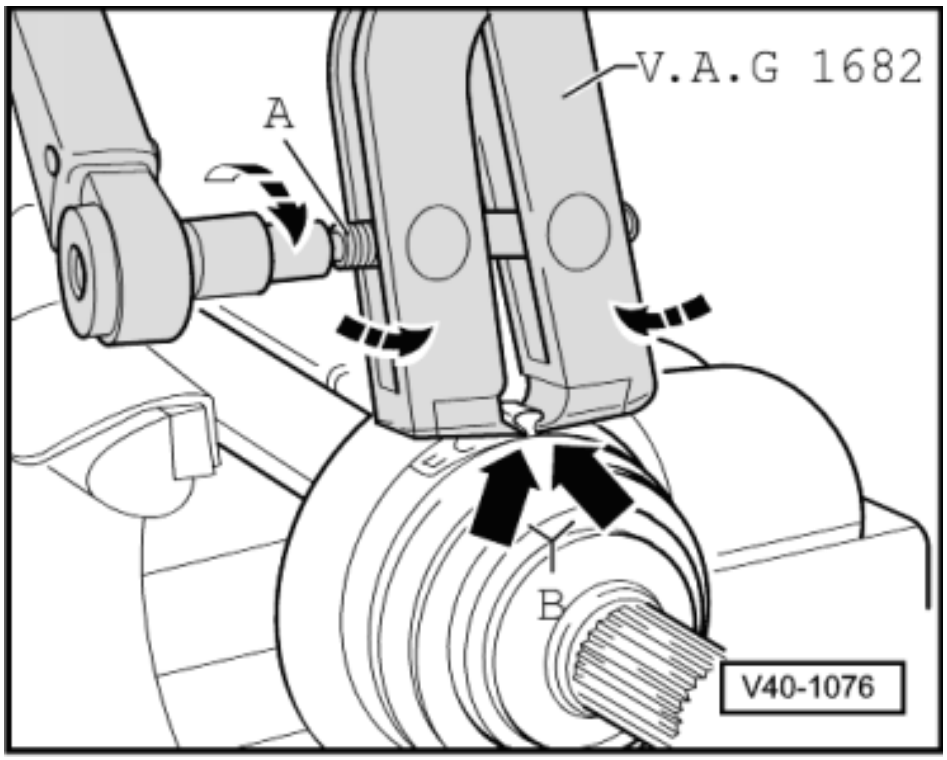

The instructions relating to Fig. 1 only apply to stainless steel clamps.

Rubber boots are tensioned using pliers V.A.G 1275.

-> Fig.1 Tensioning clamp on outer joint

- Apply pliers V.A.G 1682 as shown in illustration. Ensure that the cutting jaws of the pliers fit into the corners (arrows B) of the hose clamp.
- Tension hose clamp by turning screw with a torque wrench (take care to keep pliers straight).

- Tightening torque: 20 Nm.
- Use torque wrench with 5...50 Nm adjustment range (e.g. V.A.G 1331).
- Ensure that the spindle thread of the pliers moves freely. If necessary, lubricate with MoS2 grease.
- If the thread is tight e.g. due to dirt, the required tensioning force for the clamp will not be achieved in spite of correct tightening torque settings.

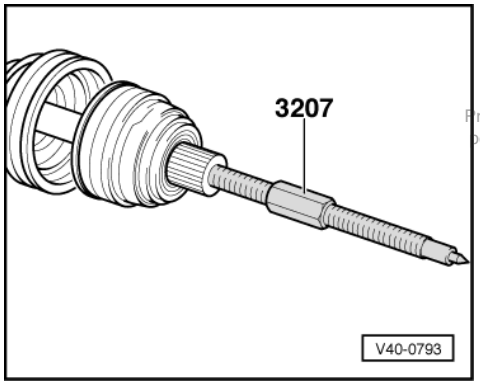

-> Fig.2 Pressing off outer constant velocity joint

- Clamp drive shaft in vice using soft jaws.
- Remove the large clamp and fold back boot.

- Screw special tool into end of joint until constant velocity joint can be removed from shaft.

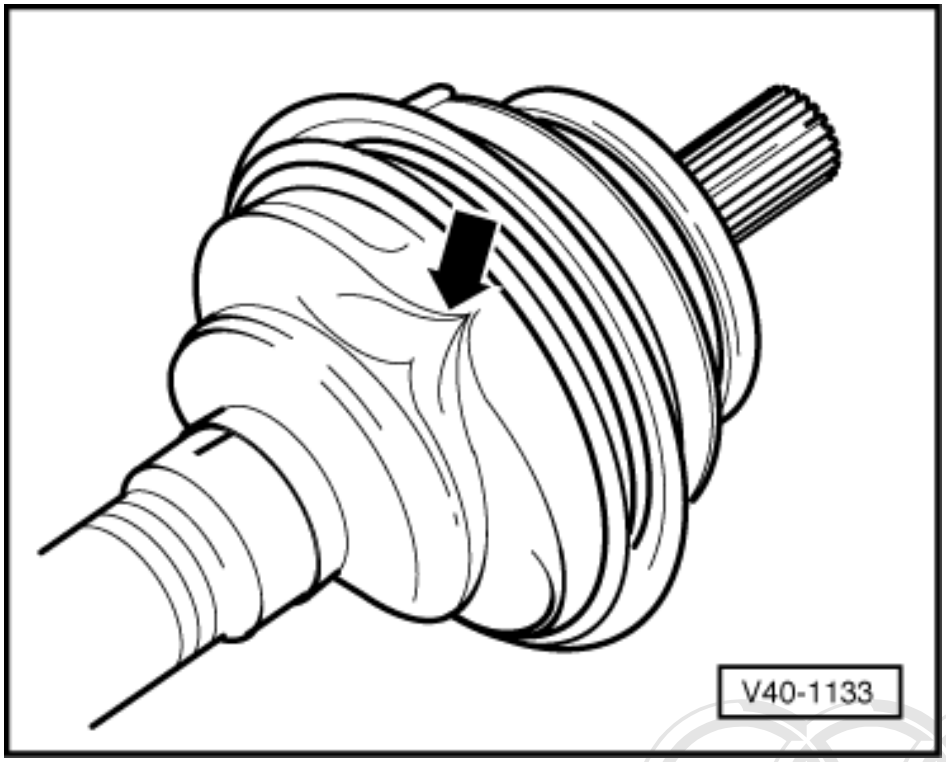

-> Fig.3 Venting boot

Only applies to rubber boots

Installing the boot may produce a vacuum in the joint.

This vacuum causes a fold to form while driving the vehicle -see arrow-.

Therefore please note the following:

- Before tensioning the clamps, lift the boot to ensure pressure equalisation.

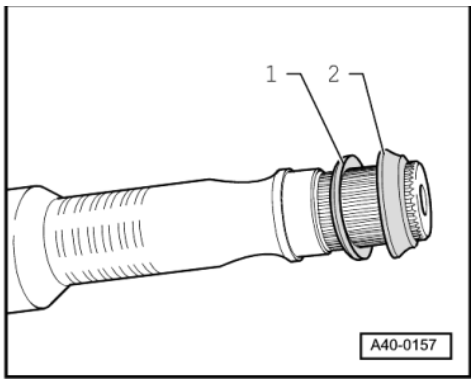

Fig.4 -> Installation position of spacer ring and dished washer (wheel side)

1 - Dished washer
2 - Spacer ring (plastic)

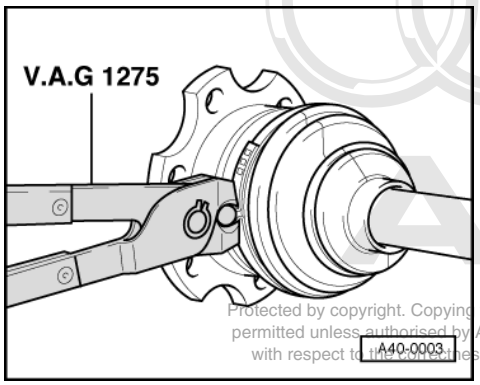

-> Fig.5 Tensioning clamp on inner joint

14.4 - Dismantling and assembling triple roller joint

Dismantling

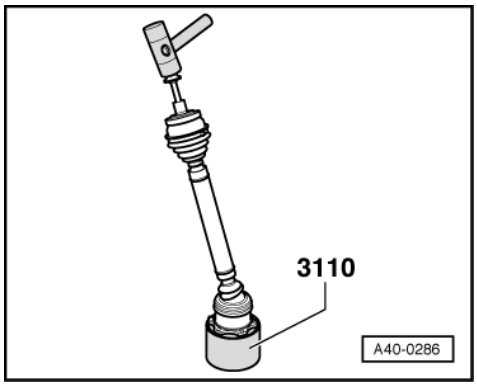

- Push out cover

Note:

- Use old bolt for pushing out
- For this purpose, tilt shaft by approx. 20 °

Use plastic hammer and special tool 3110.

- -> Remove any shavings in the cover area.
- Open large clamp.
- Open small tensioning clamp at shaft and push back boot.

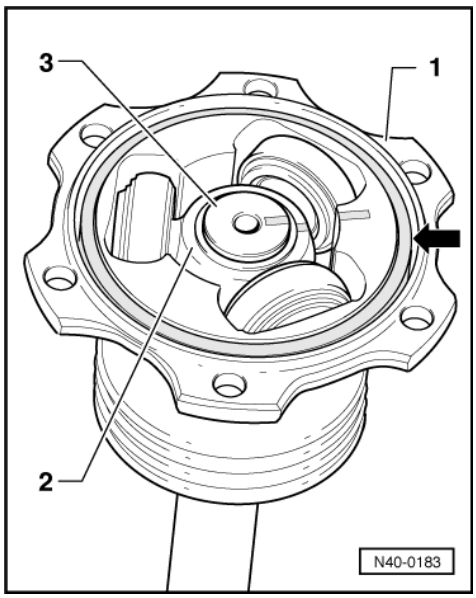

- -> Installation position of parts 1...3 must be marked with dashes.

If they are not marked and therefore not reinstalled into their original position upon reassembly, this may lead to noise during subsequent driving operation.
Suitable for marking is a water-resistant felt-tip pen.
- Remove O- ring - arrow- from groove.

1 - Joint
2 - Triple roller star
3 - Drive shaft

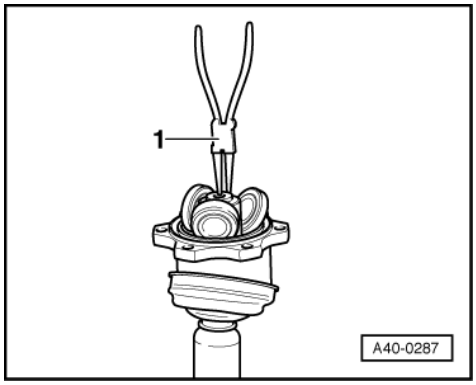

- -> Remove circlip.

1 - Pliers (commercially available)

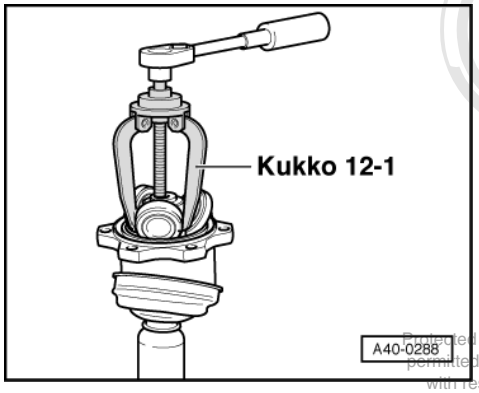

- -> Pulling off triple roller star from drive shaft
  Use puller Kukko 12-1 (arrow) (commercially available)

- Remove grease in groove for the sealing ring and from splines of shaft.
- Check roller body and running surface for wear.
- Clean shaft and joint.

Assembling

- Push small clamp for boot onto shaft.
- Push new boot onto shaft.
- Push joint onto shaft.
- Push boot onto joint.

Assemble triple roller star

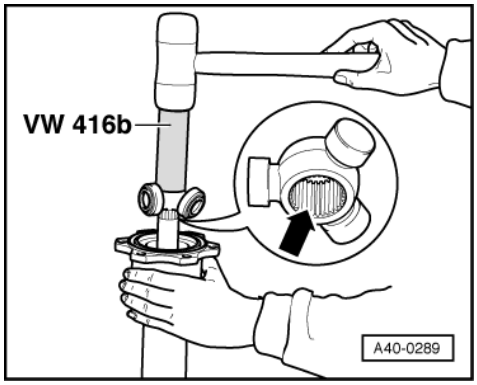

The chamfer -arrow- at the star faces towards shaft and is used as an assembly aid.

- -> Position triple roller star on shaft according to marking and drive up to stop.
- Insert circlip and make sure that it is positioned correctly.
- Press 70 grams of drive shaft grease G 000 605 from the repair kit into triple roller joint.
- Push joint over the rollers.

Note:

Ensure that the boot is not twisted in the process.

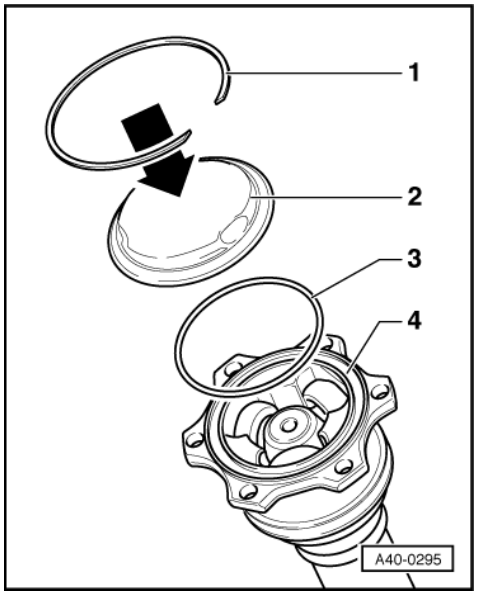

- Press 70 grams of drive shaft grease G 000 605 from the repair kit into the rear of the triple roller joint.
- -> Carefully clean groove for sealing ring

- Insert O-ring in groove -1-

For better illustration, the individual parts are shown disassembled.

1 - Circlip
2 - Cover from repair kit
3 - O-ring
4 - Triple roller joint

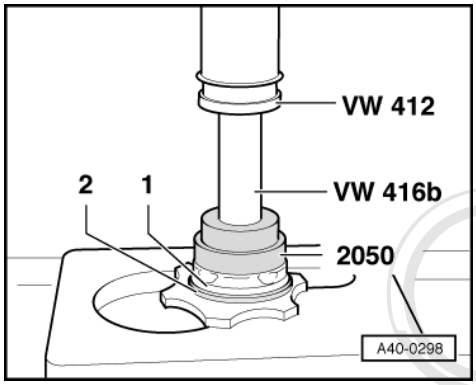

- Insert drive shaft into pressing tool.
- Lightly press on cover -1- from repair set so that the circlip from the repair kit can be inserted.
- Insert circlip from repair set around the edge.

Note:

Ensure that circlip engages audibly.

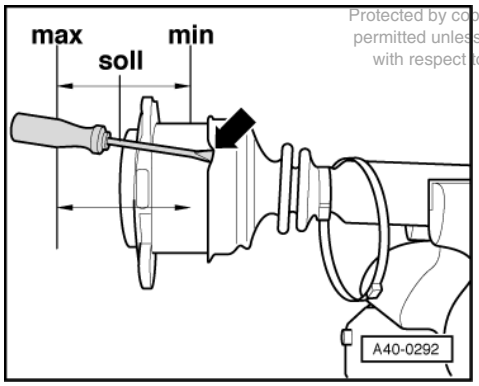

- -> Position joint into middle position.
  See min-max position

Note:

Whilst the joint is positioned in the centre it is necessary to vent the boot, e.g. with a screwdriver -arrow-

.

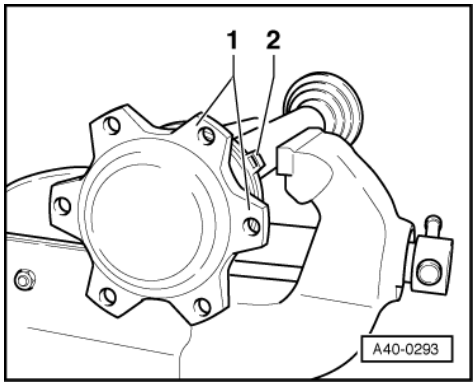

- -> Attach clamp => Fig. 92

Note:

In order to insert the multi point socket head bolts more easily when installing the drive shaft it is necessary that the clamp tie eye-2- is located between the fixing flanges -1- of the joint.

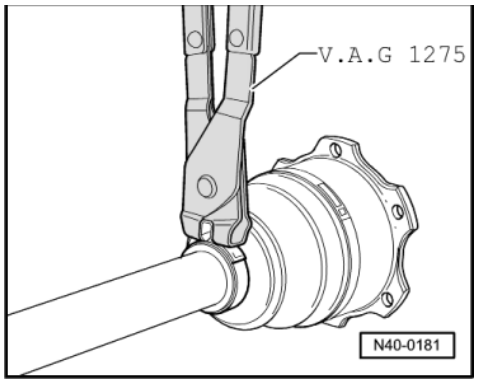

- -> Tension small clamp using pliers V.A.G 1275.

42 - Rear suspension

1 - Contact corrosion

1.1 - Contact corrosion

Contact corrosion can occur if non-approved fasteners are used (bolts, nuts, washers etc.).

For this reason, only fastening components which have been subjected to special surface treatment (Dachromet) are used in installation. These components can be identified by their greenish surface finish.

In addition, all rubber and plastic parts and all adhesives are made of non-electrically conductive materials.

If you are not sure of the reusability of parts, always fit new parts.

Please note the following:

Always use genuine service replacement parts.

These have been tested and are compatible with aluminium.

Accessories must be approved by AUDI AG.

Damage resulting from contact corrosion is not covered by the warranty.

2 - Layout of rear axle components

2.1 - Layout of rear axle components

2.2 - General information

Welding and straightening operations are not permitted on load-bearing suspension components or wheel-controlling components.

Do not attempt to move a vehicle without a drive shaft fitted as this will result in wheel bearing damage. If the vehicle does have to be moved, always note the following points:

- Fit an outer joint in place of the drive shaft.
- Tighten the outer joint to 50 Nm.

Bonded rubber bushes can only be twisted to a limited extent. The bolted connections on the suspension links should therefore only be tightened once the vehicle is standing on the ground.

Retrofitting of a sports running gear is described in the "Installation instructions for sports running gear".

=> "Audi installation instructions" binder

For vehicles with headlight range control, refer to =>Page 114 .

2.3 - Component overview

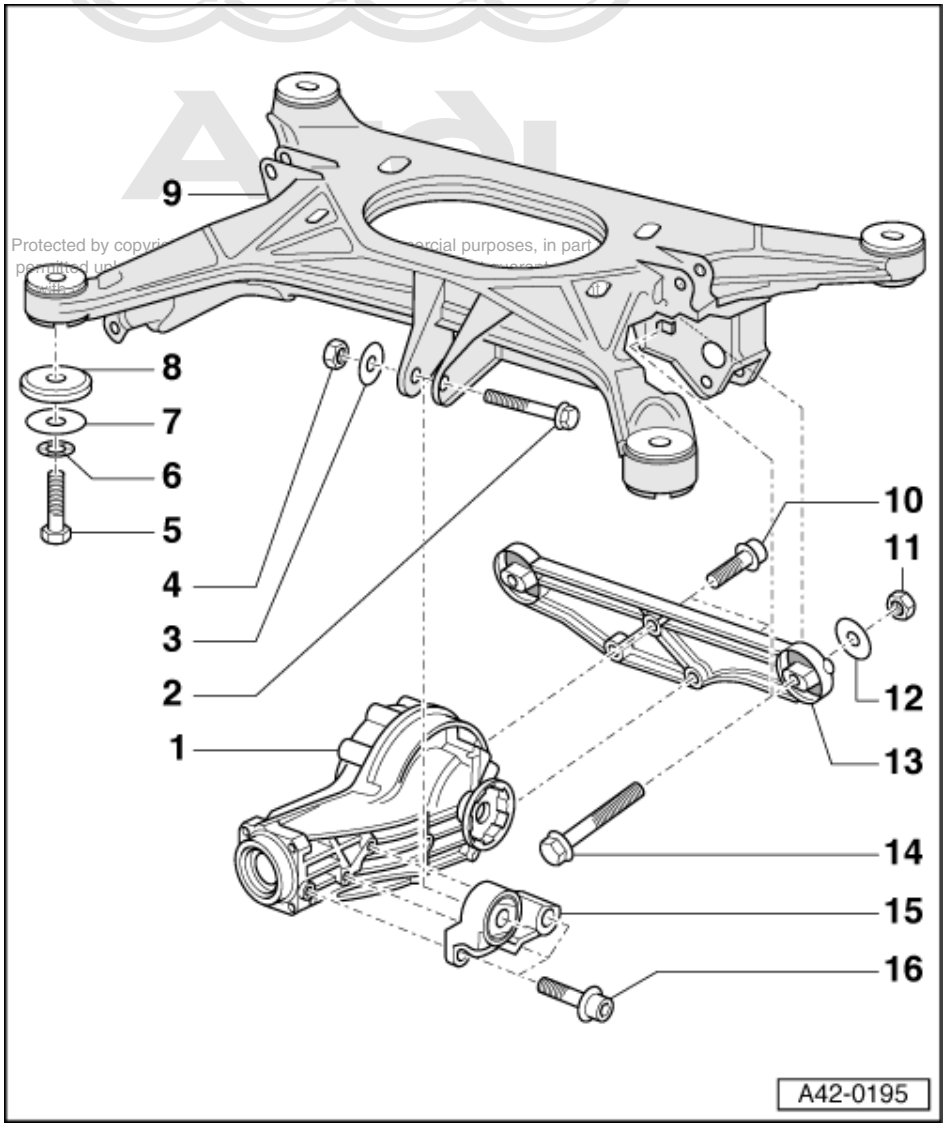

Part I

1 Rear final drive
2 Hexagon bolt, 40 Nm
3 Washer
4 Self-locking nut, 40 Nm
- Always replace

5 Hexagon bolt
- Always replace
- Tighten to 150 Nm and then give a further 90° turn
- Threads in the body can be repaired by using a wire thread insert fashioned according to DIN 8140 (Heli-Coil).
  The thread insert must be of the same length as the thread in the body.

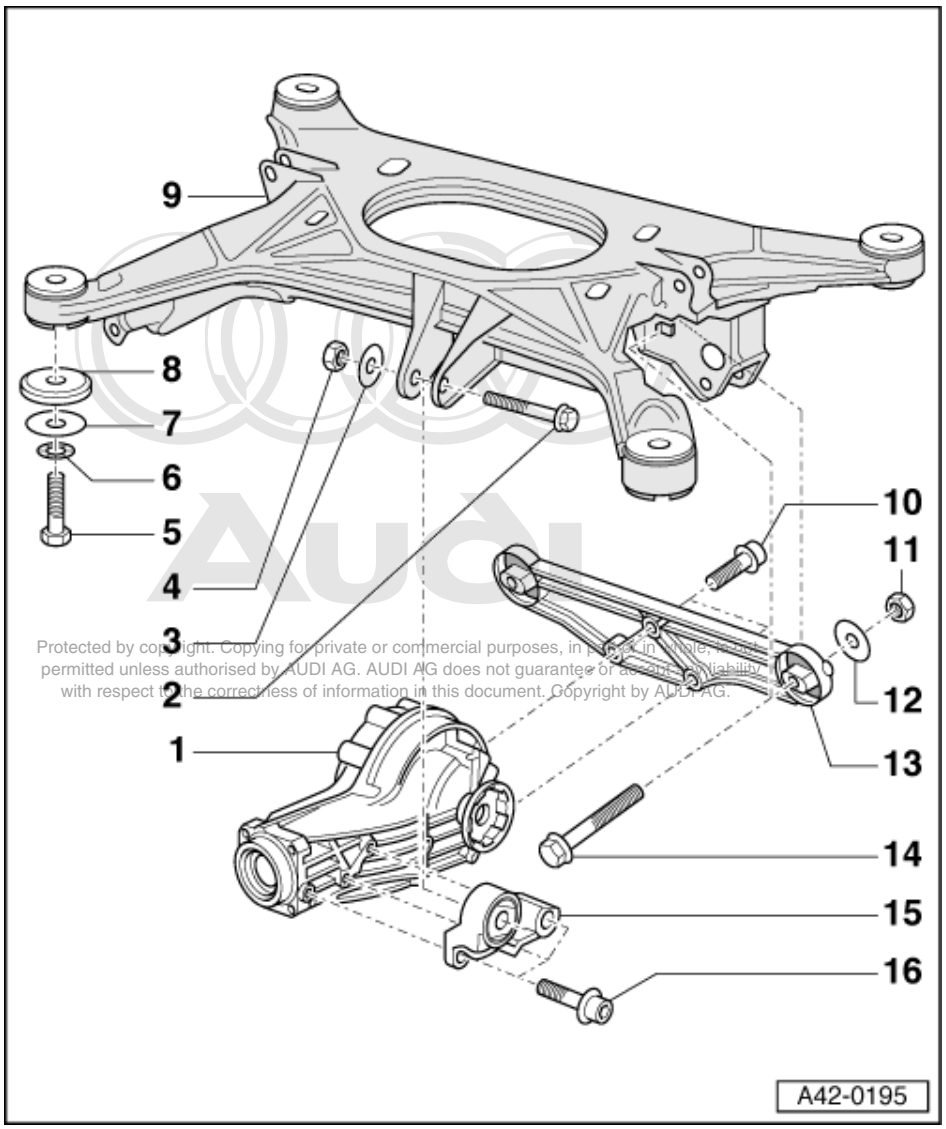

6 Spring washer
- Always replace
- Locking edges face towards bolt head

7 Washer

8 Washer

9 Subframe
- Removing and installing =>Page 148 .
- Replacing bushes => Page 155

Note:

Do not lift vehicle at subframe.

10 Cheese-head bolt
- Tightening torque

=> Manual Gearbox, 4WD; Repair group 39; Removing and installing rear differential Removing and installing rear differential

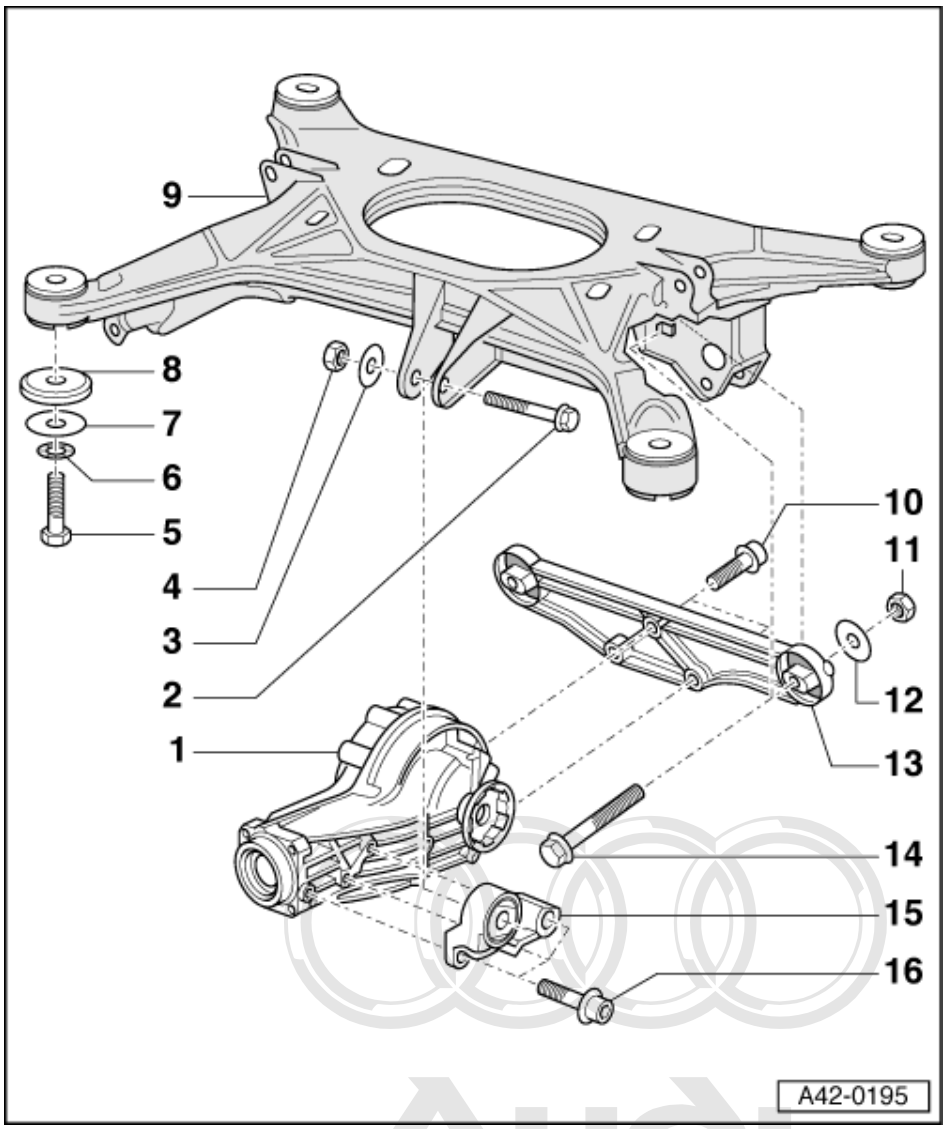

11 Self-locking nut, 40 Nm
- Always replace

12 Washer

13 Rear crossmember

14 Combi bolt

15 Front gearbox support

16 Cheese-head bolt
- Tightening torque

=> Manual Gearbox, 4WD; Repair group 39; Removing and installing rear differential Removing and installing rear differential

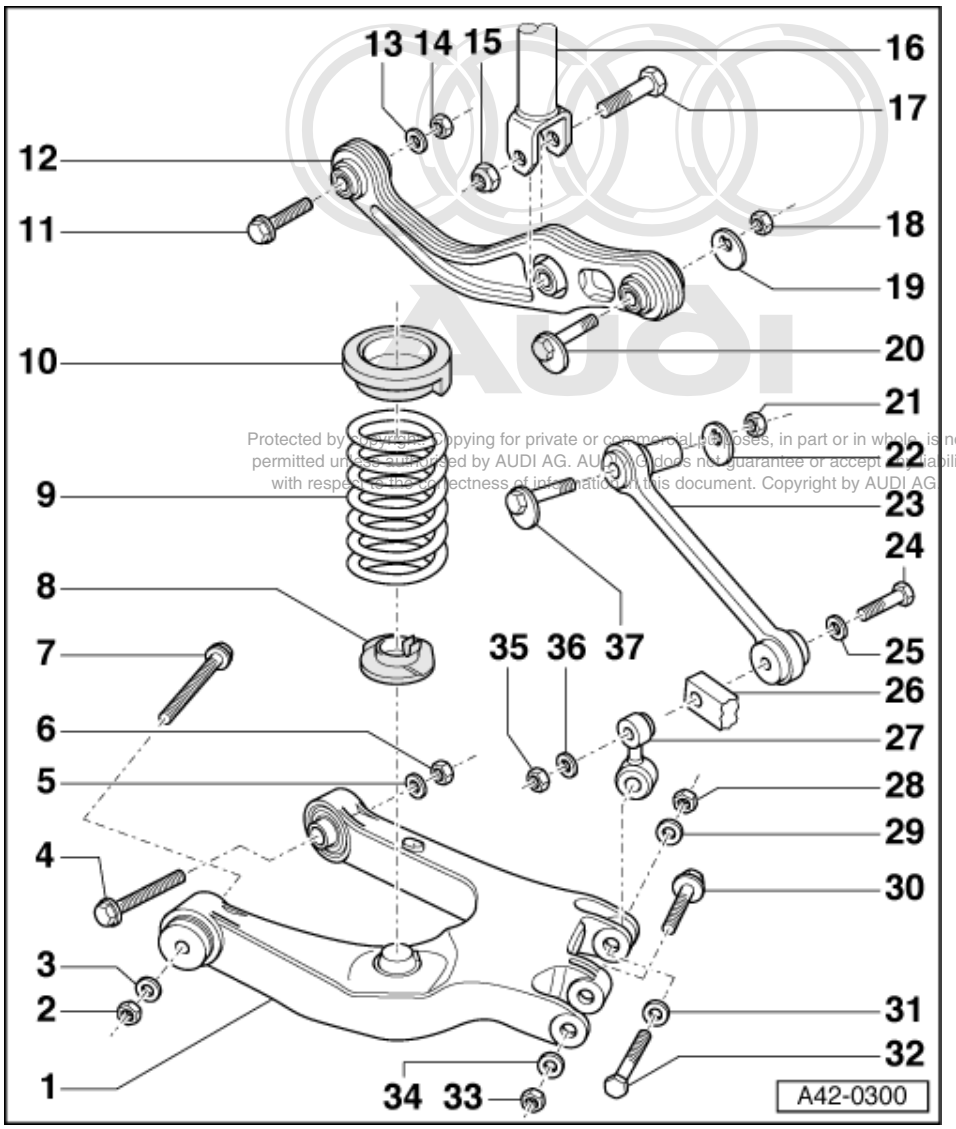

Part II

1 Trapezium link
- Removing and installing =>Page 142 .
- Replacing bushes => Page 146
- Always replace bushes on both sides of the vehicle

2 Self-locking nut
- Always replace
- Tighten to 80 Nm and then give a further 90° turn
- Tighten bolted connections only when vehicle is standing on the ground

3 Washer

4 Combi bolt
- Always replace

5 Washer

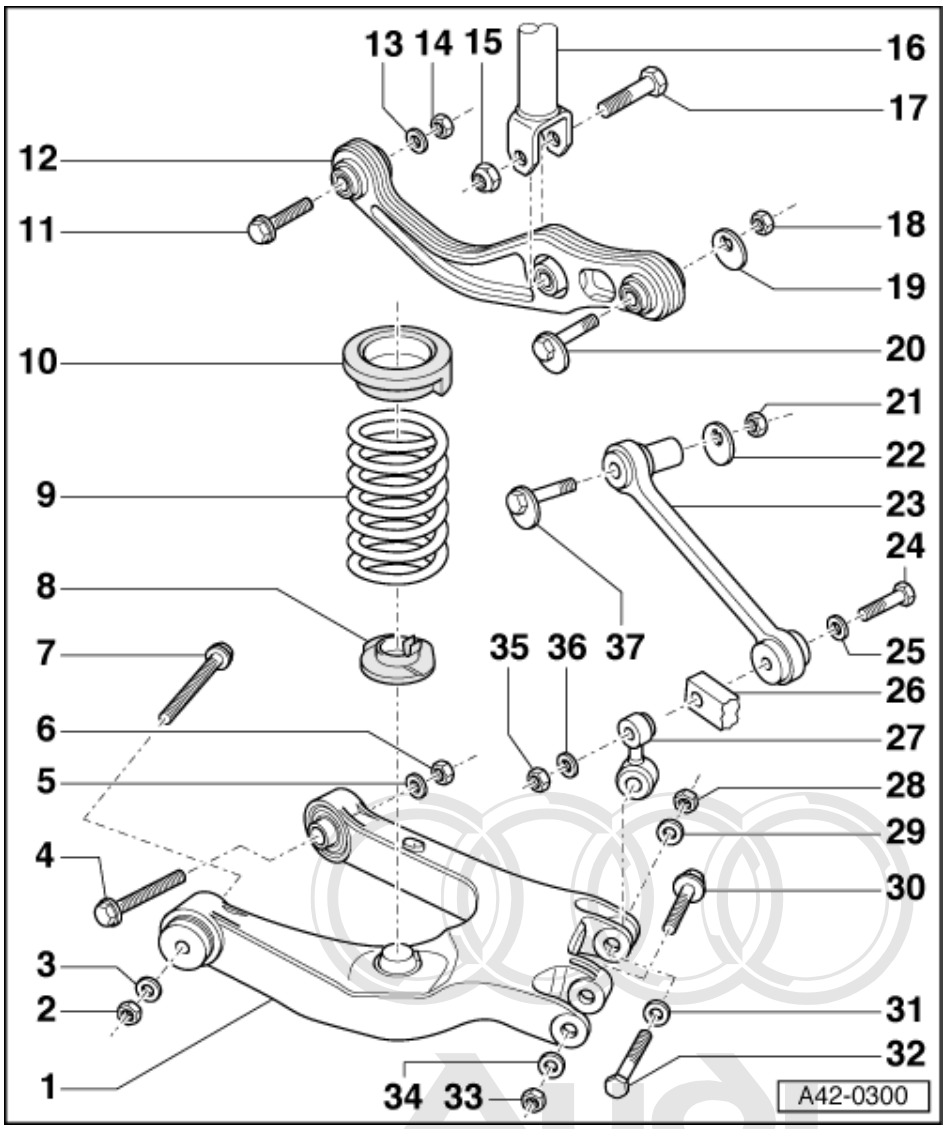

6 Self-locking nut
- Always replace
- Tighten to 80 Nm and then give a further 90° turn
- Tighten bolted connections only when vehicle is standing on the ground

7 Combi bolt
- Always replace
- With additional washer => Fig. 2

8 Lower spring seat
- Spring end rotated up to stop

9 Coil spring
- Note different running gear versions; see vehicle data sticker
  => Page 216
- Removing and installing
  =>Page 116

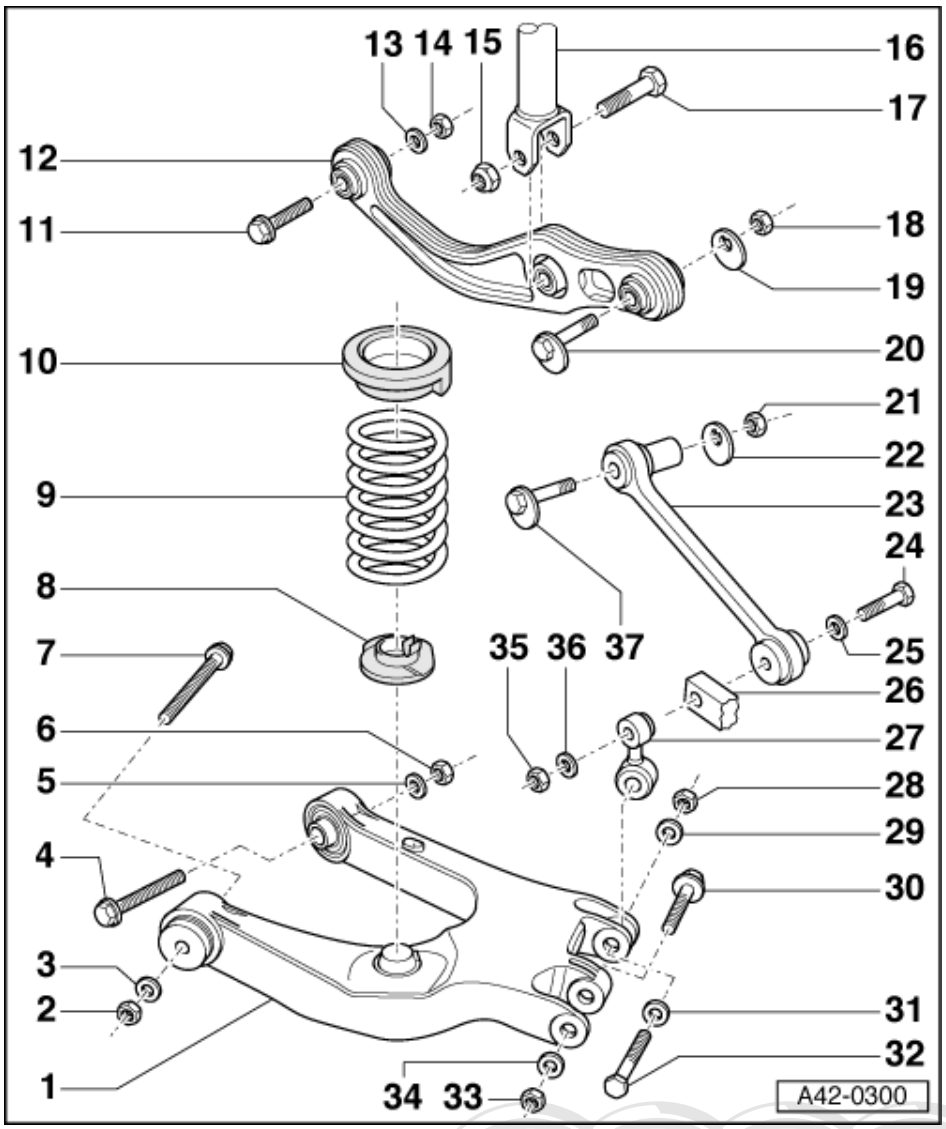

10 Upper spring seat
- Rotated up to stop on spring end

11 Combi bolt
- Always replace
- Depending on build version with additional washer => Fig. 2

12 Transverse link
- Removing and installing
  =>Page 138
- Replacing bushes => Page 141
- Always replace bushes on both sides of the vehicle

13 Washer

14 Self-locking nut
- Always replace
- Tighten to 80 Nm and then give a further 90° turn
- Tighten bolted connections only when vehicle is standing on the ground

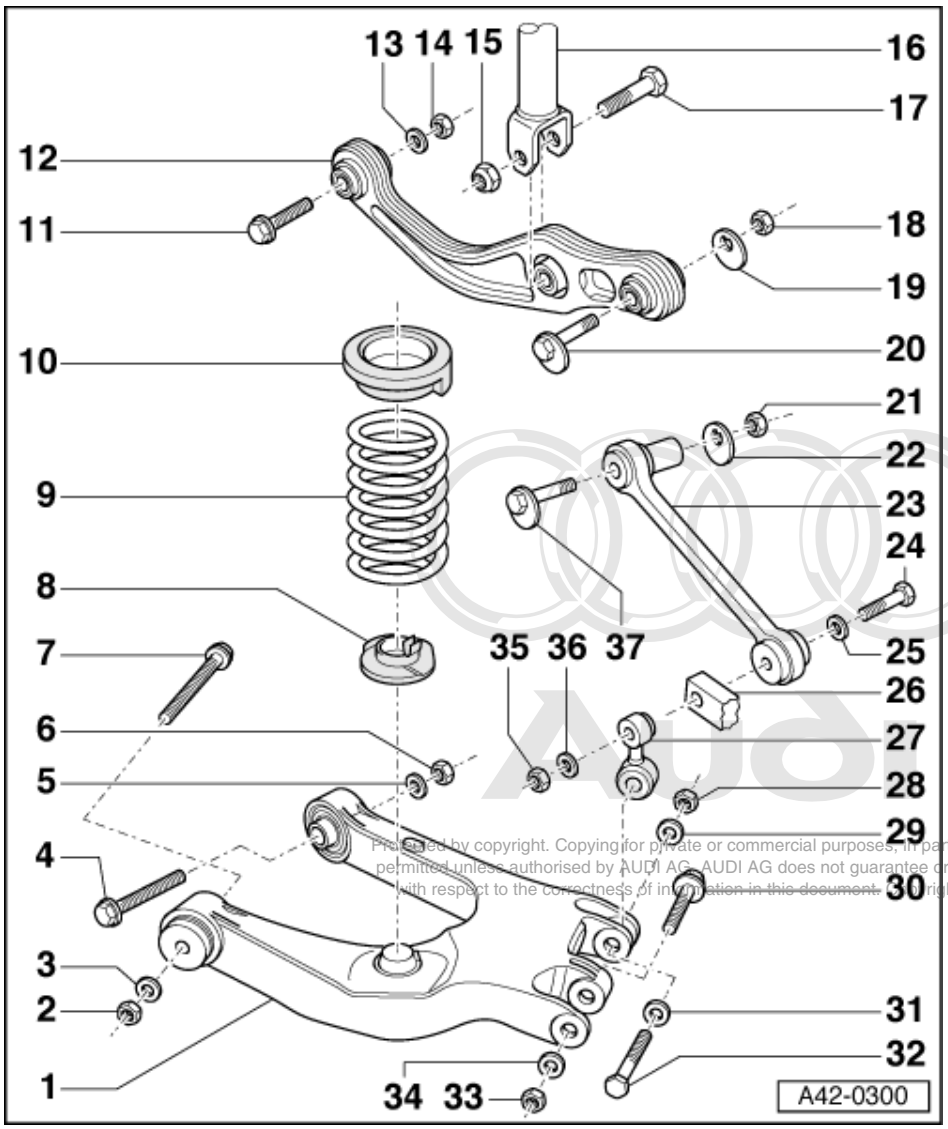

15 Self-locking nut, 65 Nm

- Always replace
- Tighten bolted connections only when vehicle is standing on the ground

16 Shock absorber

- Removing and installing
  =>Page 117
- Note different running gear versions; see vehicle data sticker
  => Page 216
- Defective shock absorbers must always be drained and have gas removed before being scrapped => Page 4
- Check shock absorber removed => Page 6

17 Combi bolt

- Always replace

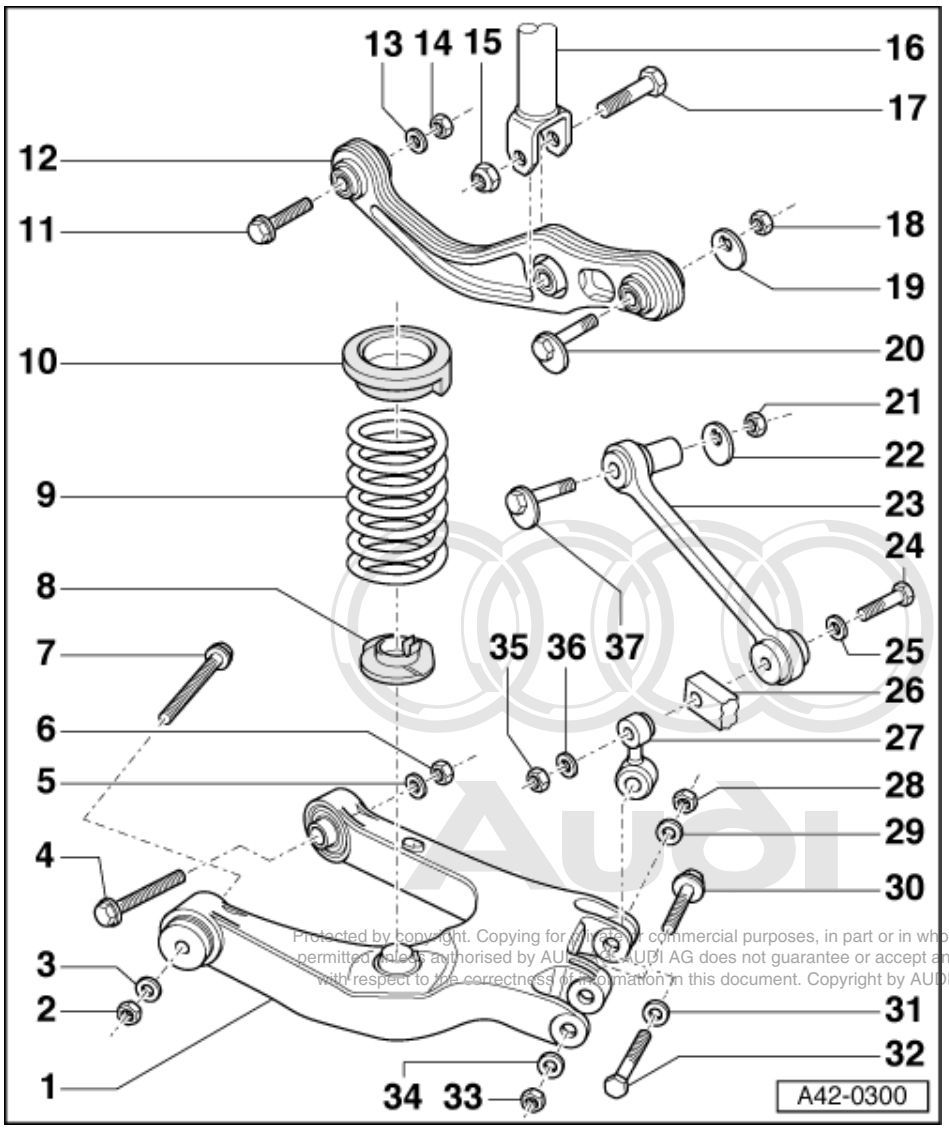

18 Self-locking nut, 95 Nm

- Always replace
- Tighten bolted connections only when vehicle is standing on the ground

19 Eccentric washer

- Inner hole with lug

20 Eccentric bolt

- Adjust toe after loosening
  => Page 222
- Do not turn more than 90° to left or right (i.e. smallest to largest adjustment possible)

21 Self-locking nut

- Always replace
- Tighten to 70 Nm and then give a further 90° turn
- Tighten bolted connections only when vehicle is standing on the ground

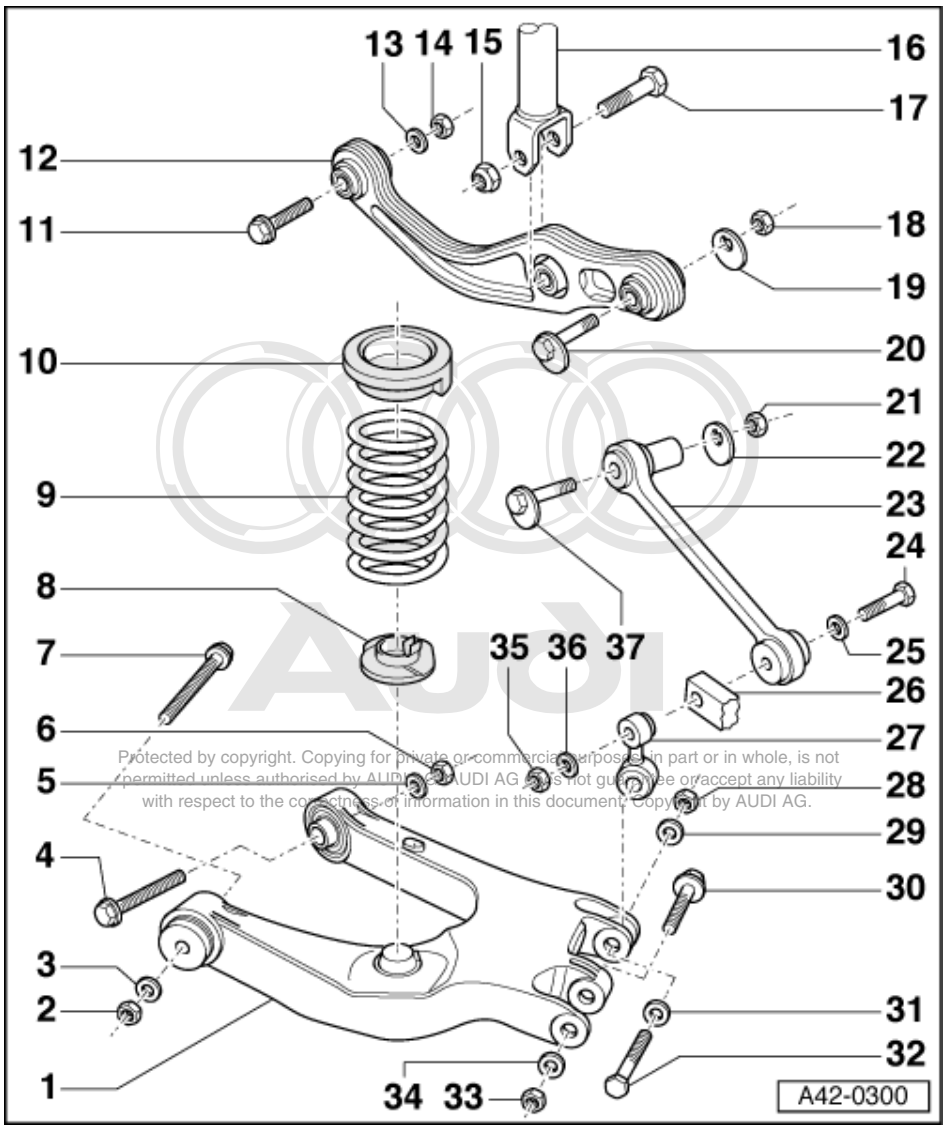

22 Eccentric washer
- Inner hole with lug

23 Track rod
- illustrated here: Vehicles from model year '97
- Vehicles up to model year '96
  => Fig. 113
- Mixed installation of old and new track rod is not permissible.
- Removing and installing
  =>Page 156

24 Hexagon bolt
- Always replace

25 Washer

26 Wheel bearing housing

27 Connecting link
- Connects track rod to wheel bearing housing and trapezium link

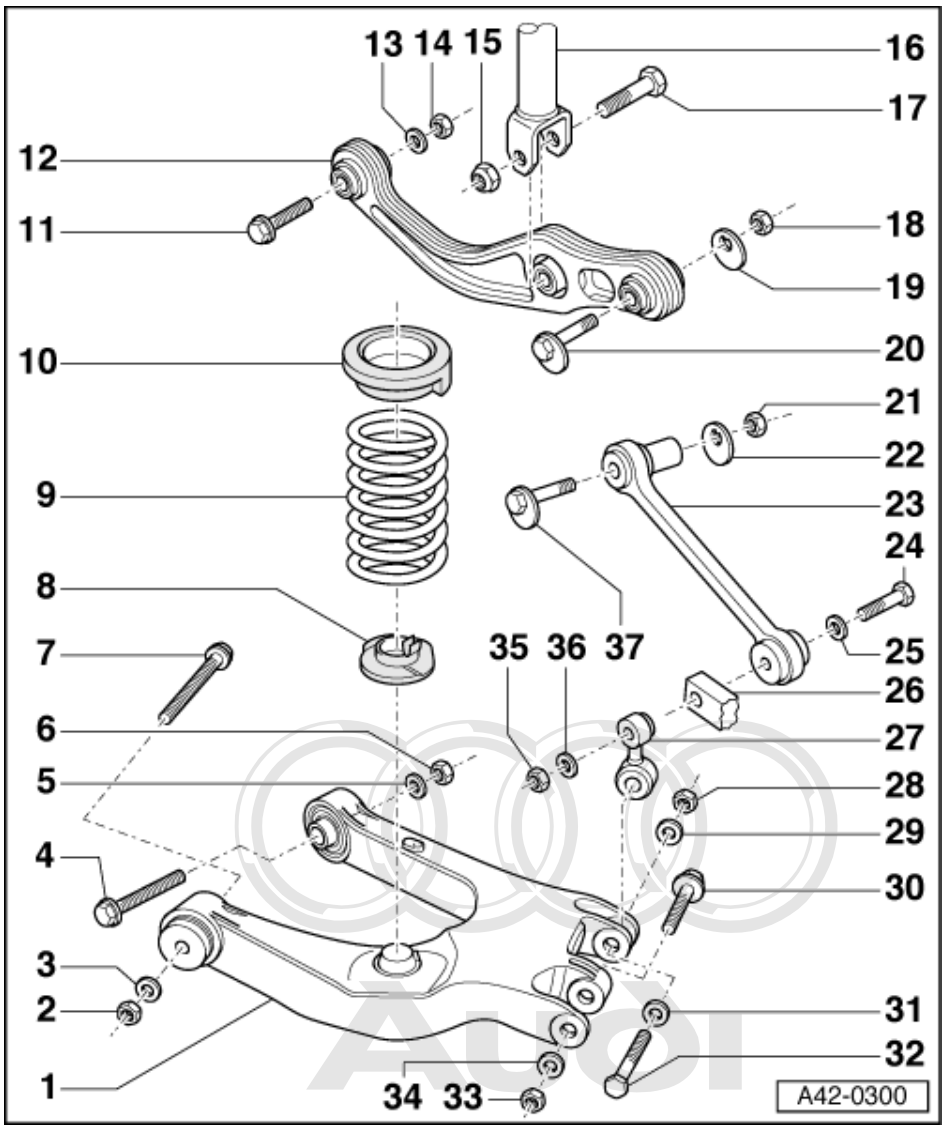

28 Self-locking nut
- Always replace
- Tighten to 80 Nm and then give a further 90° turn
- Tighten bolted connections only when vehicle is standing on the ground

29 Washer

30 Collared bolt
- Always replace

31 Washer

32 Hexagon bolt
- Always replace

33 Self-locking nut
- Always replace
- Tighten to 80 Nm and then give a further 90° turn
- Tighten bolted connections only when vehicle is standing on the ground

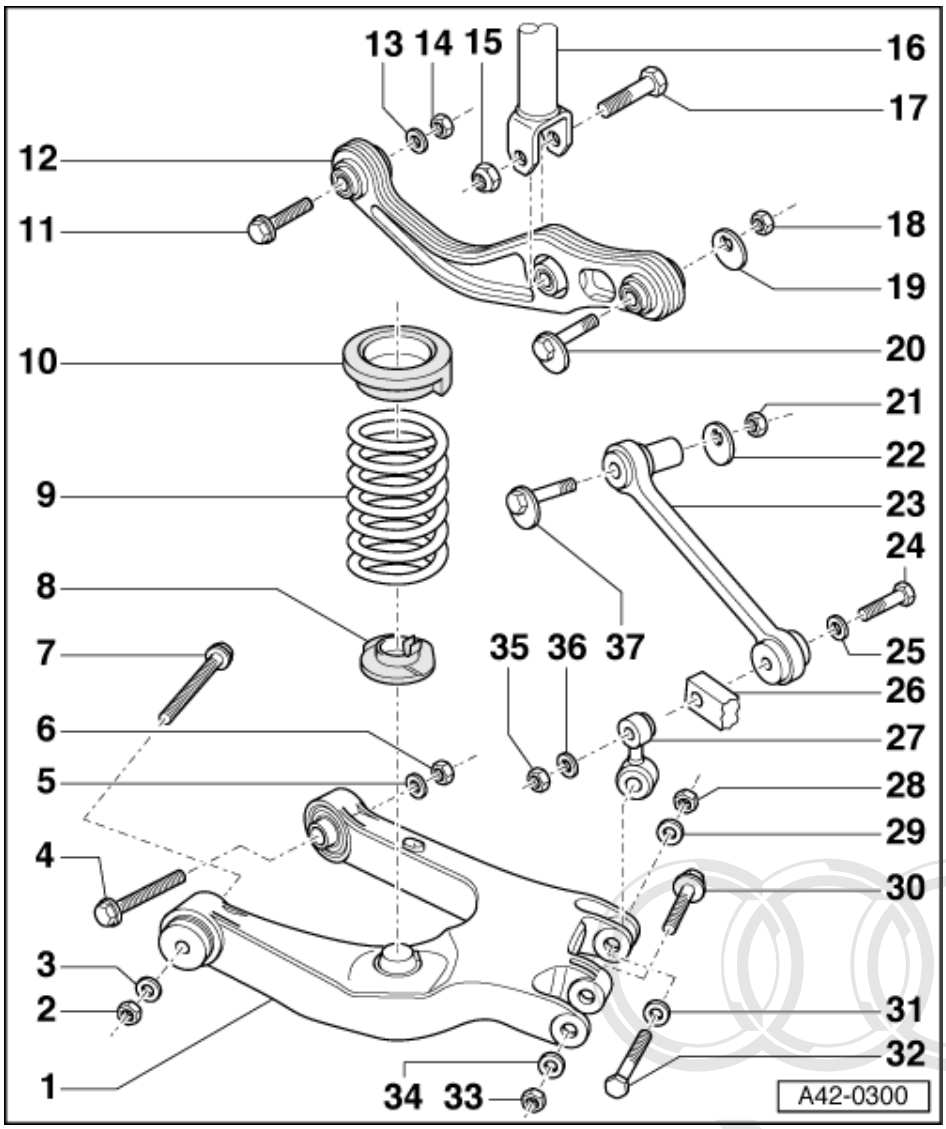

34 Washer

35 Self-locking nut

- Always replace
- Tighten to 70 Nm and then give a further 90° turn
- Tighten bolted connections only when vehicle is standing on the ground

36 Washer

37 Eccentric bolt

- adjust toe after loosening
  => Page 222
- Do not turn more than 90° to left or right (i.e. smallest to largest adjustment possible)

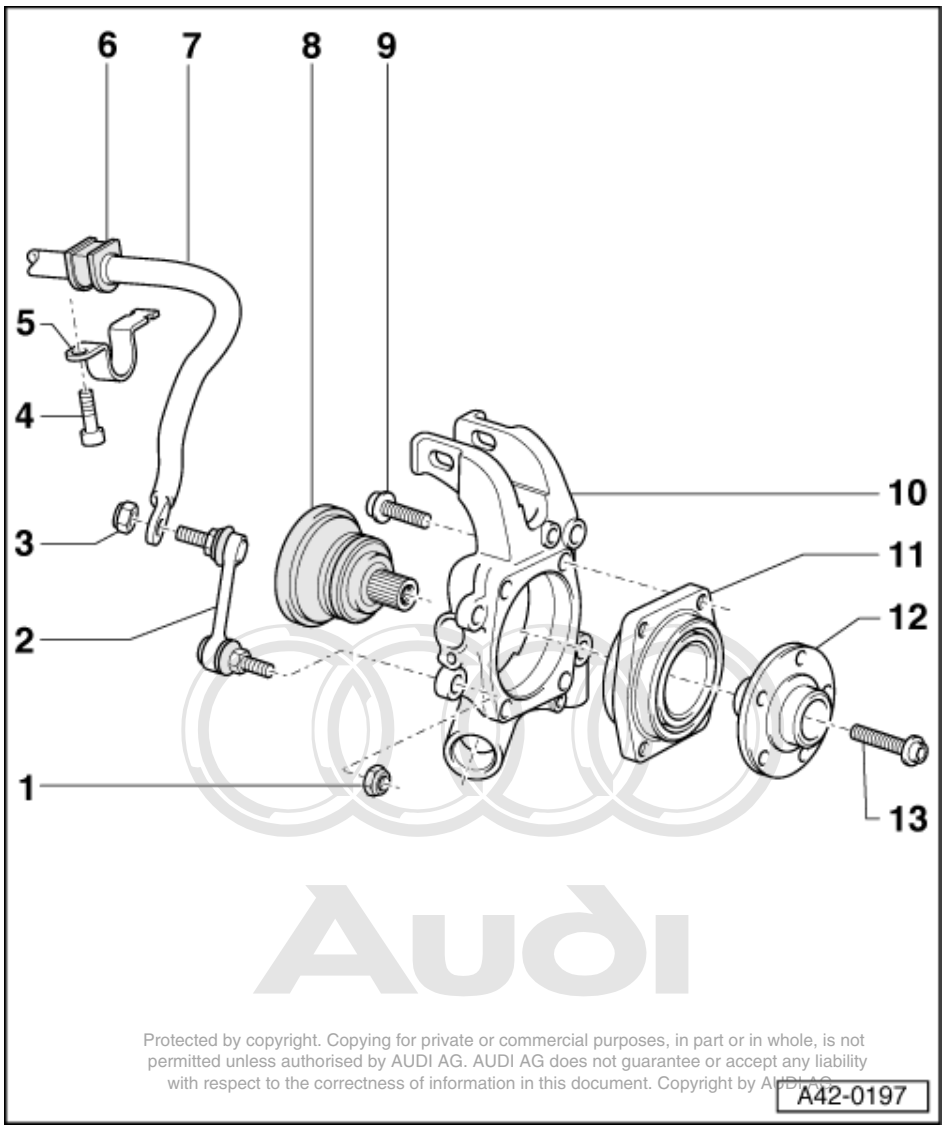

Part III

1 Self-locking nut, 45 Nm
- Always replace

2 Connecting link
- Connects anti-roll bar to wheel bearing housing

3 Self-locking nut, 70 Nm
- Always replace

4 Cheese-head bolt, 30 Nm

5 Clamp

6 Mounting
- Replacing => Page 160
- Always replace bushes on both sides of the vehicle

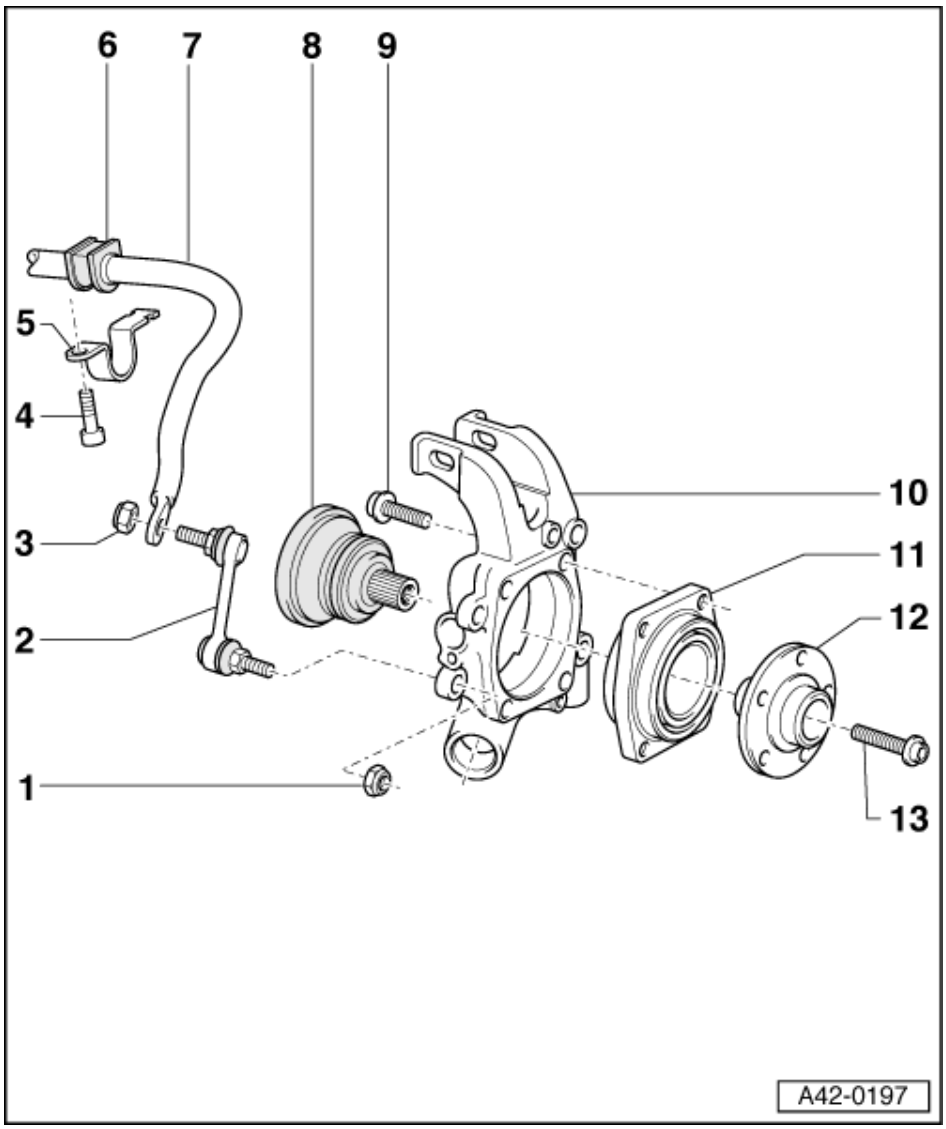

7 Anti-roll bar

- Note different running gear versions; see vehicle data sticker => Page 216
- Removing and installing =>Page 157
- Replacing bushes => Page 160
- Always replace bushes on both sides of the vehicle

8 Stub axle/drive shaft

- Removing and installing drive shaft => Page 160
- Servicing drive shaft=>Page 165 .

9 Hemispherical collared bolt

- Tighten to 80 Nm and then give a further 90° turn

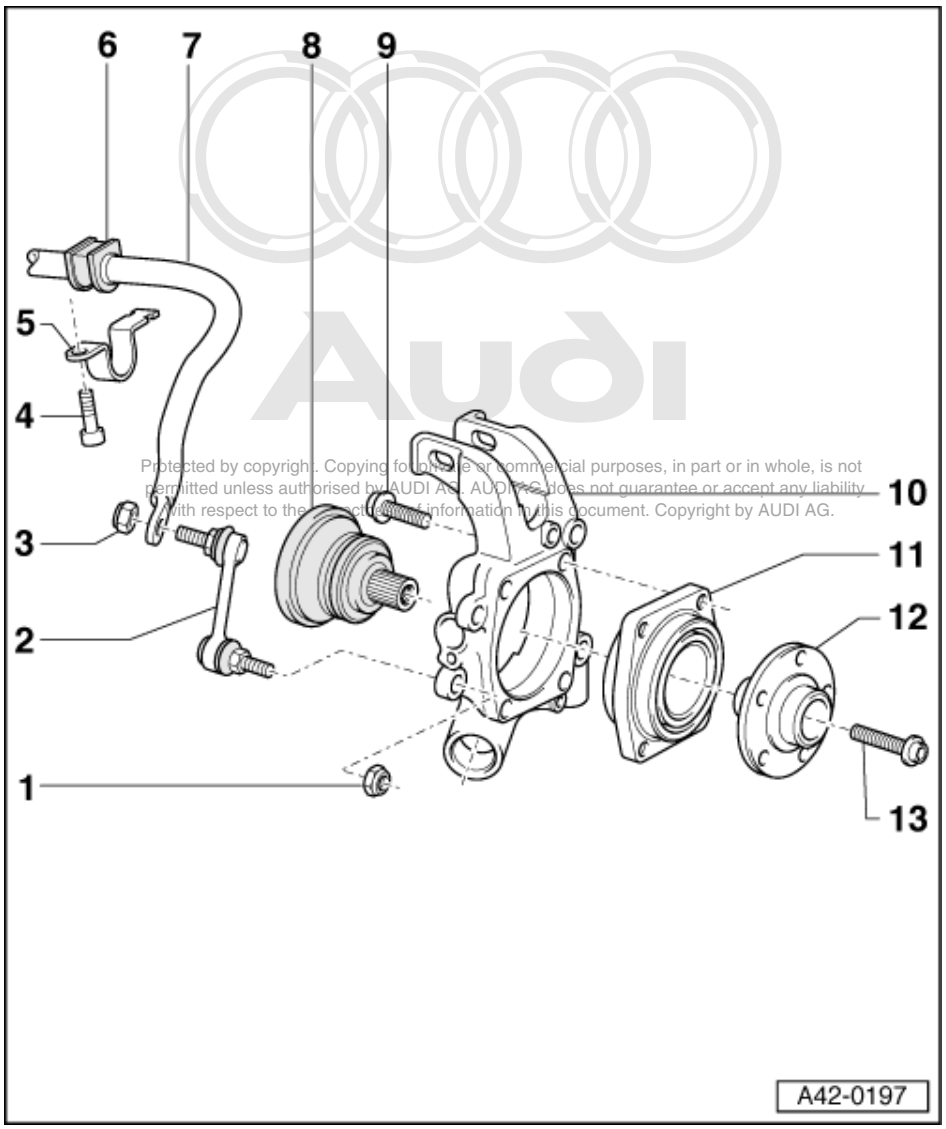

10 Wheel bearing housing

- Illustrated here: Version for screwed in wheel bearing
- Removing and installing
  =>Page 121
- servicing with wheel bearing pressed in => Page 126
- servicing with wheel bearing screwed in => Page 131

11 Wheel bearing

- Screwed in version =>Page 131
- Pressed in version =>Page 126

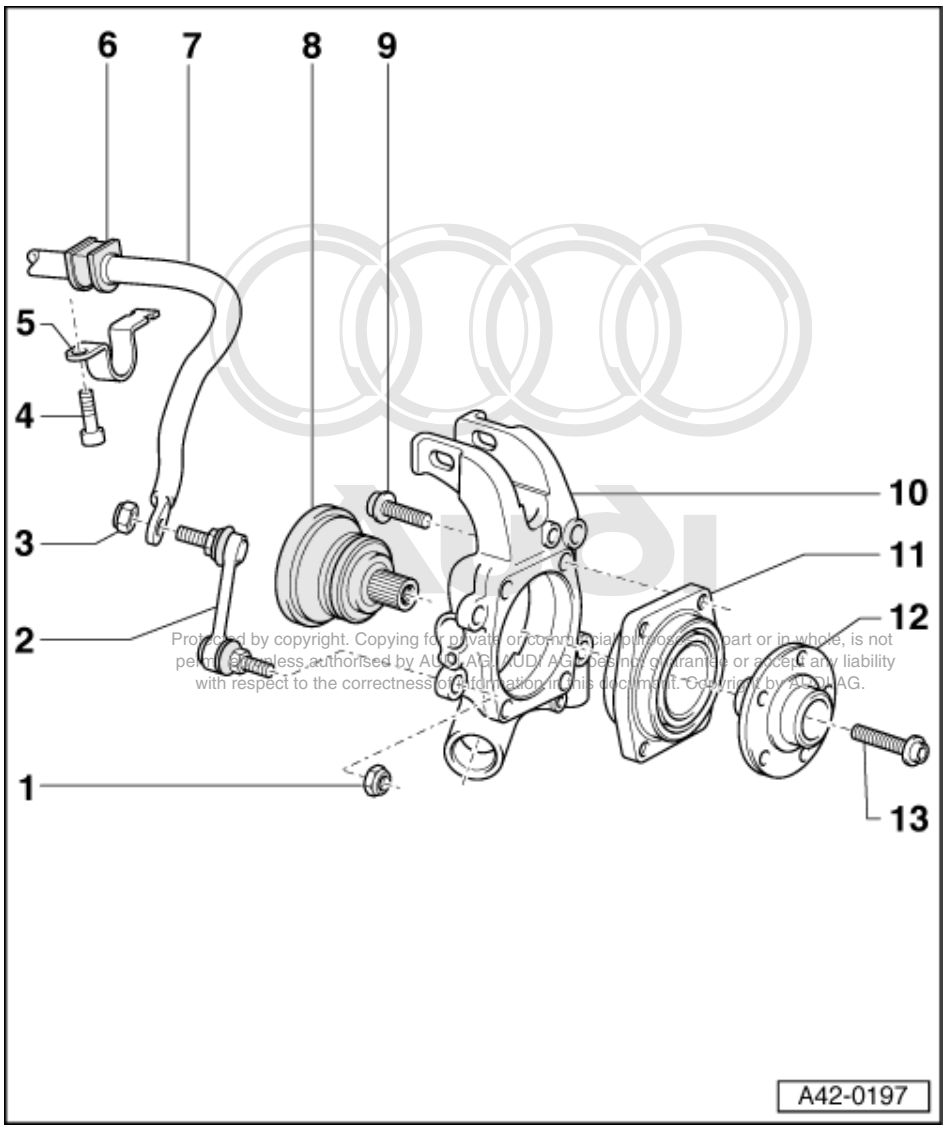

12 Wheel hub

- Pressing out with pressed-in wheel bearing=> Fig. 128
- Pressing in with pressed-in wheel bearing => Fig. 129
- Pressing out with bolted wheel bearing=> Fig. 134
- Pressing in with bolted wheel bearing => Fig. 136

13 Collared bolt

- Always replace
- Tighten to 190 Nm and then give a further 180° turn
- Note =>Page 82
- Switched from hexagon head to hexagon socket. Mixed combinations permitted
- Vehicle must be standing on wheels for unscrewing and tightening (risk of accident)

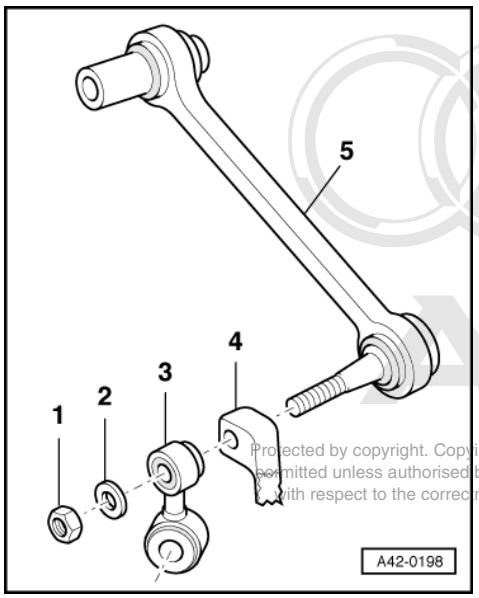

-> Fig.1 Track rod - version up to model year 96

1 - Self-locking nut, 95 Nm
2 - Plate
3 - Connecting link
4 - Wheel bearing housing
5 - Track rod, version up to model year 96

Notes:

- Install cone and taper without applying grease.
- Mixed installation with a new track rod is not permissible.

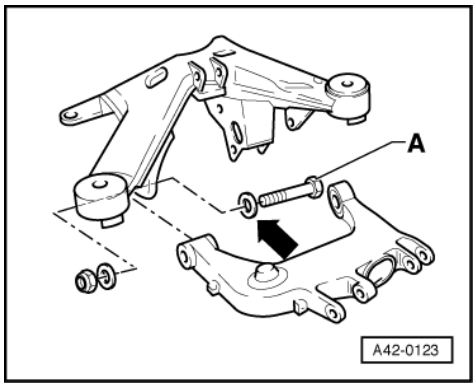

-> Fig.2 Combi bolt with additional washer

Note:

The following applies only to the bolt illustrated -A-.

From VIN 4DVN 000 410 an additional washer -arrow- is installed under the combi bolt head -A-.

The washer will be discontinued again once a shorter combi bolt -A- is installed at the factory.

2.4 - Removing and installing headlight range control

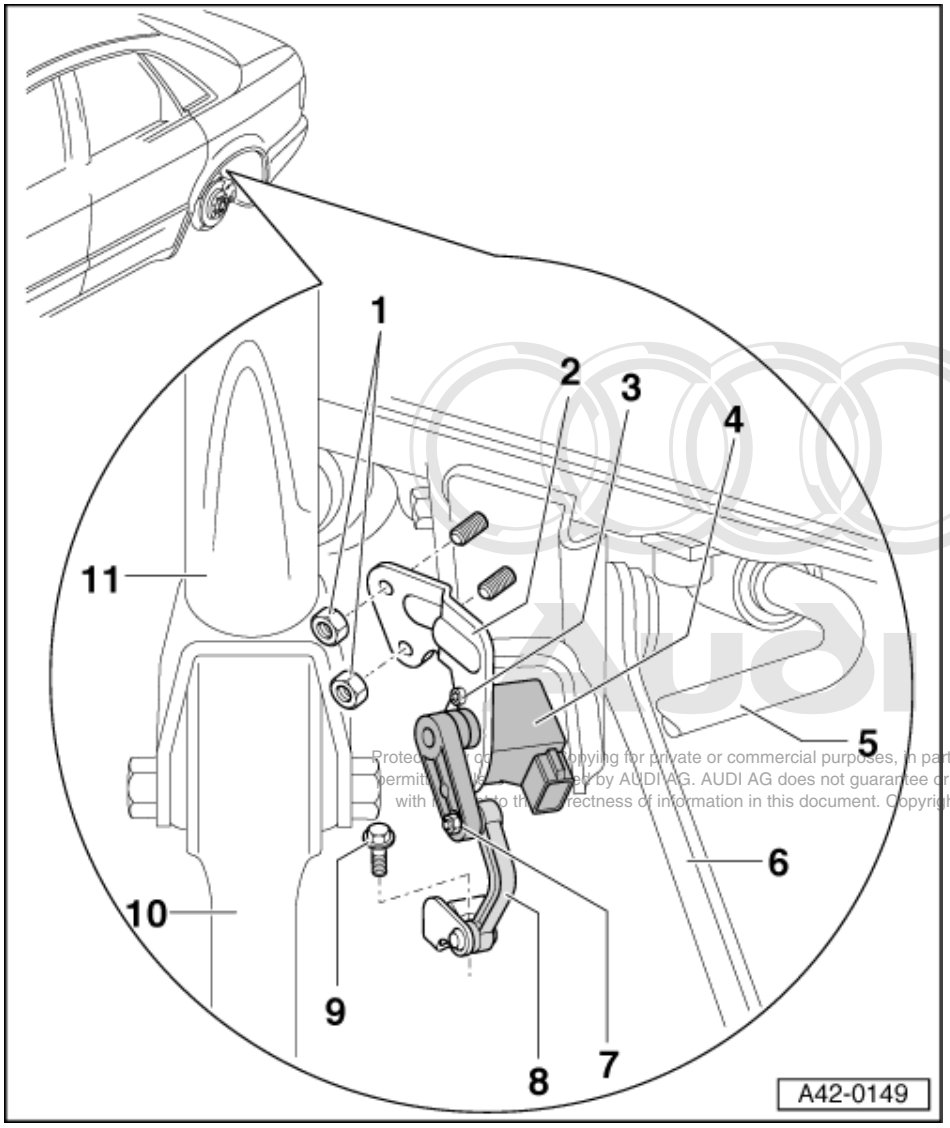

Note:

To avoid damaging the level sensor, note the following:

Before removing rear axle components (e.g.: trapezium link, wheel bearing housings, shock absorbers...) it is necessary to unbolt the levelling sensor connecting link from the trapezium link (=> Item 9).

1 Hexagon nut, 10 Nm
- Replaced by bolts depending on build version

2 Bracket

3 Hexagon socket head bolt, 4 Nm

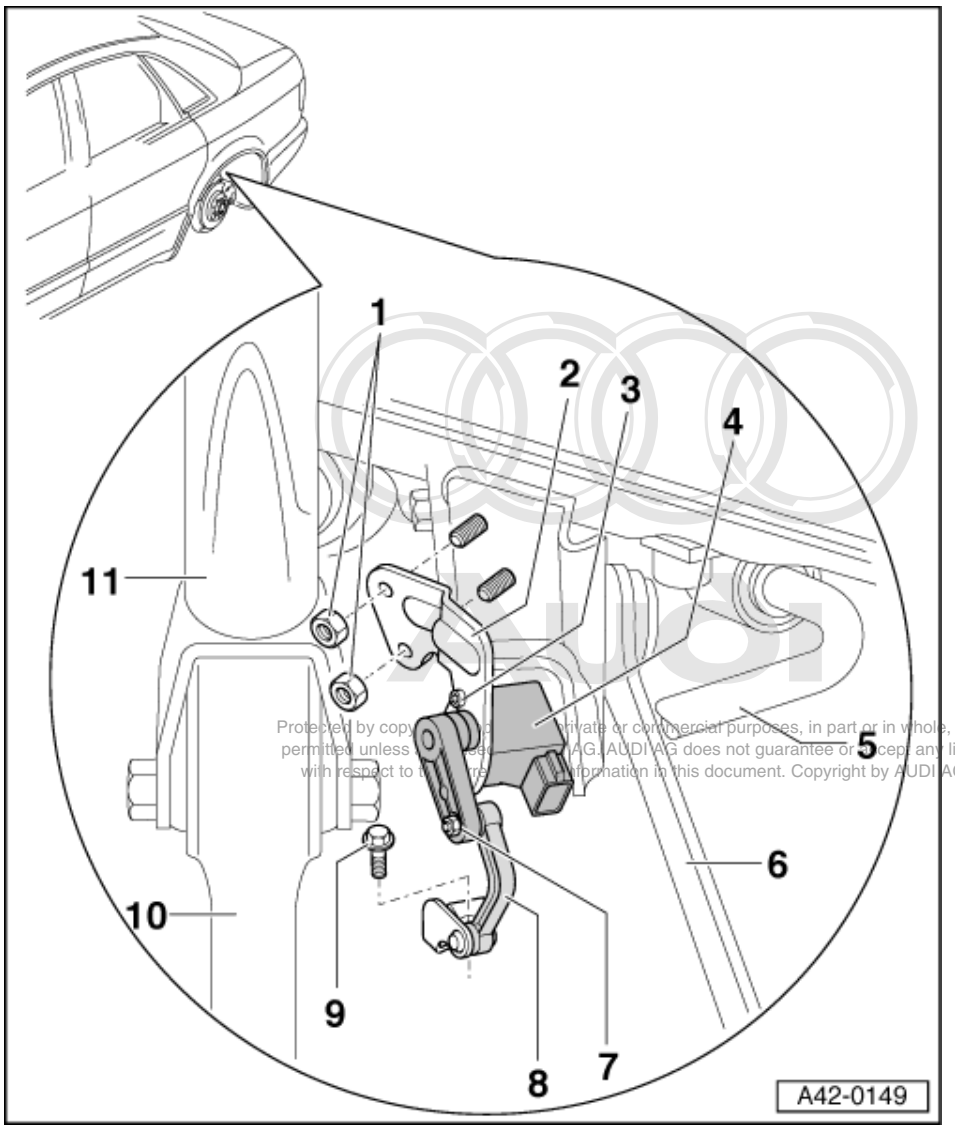

4 Level sensor
5 Anti-roll bar
6 Track rod
7 Hexagon nut, 3 Nm
8 Connecting link to levelling sensor
- Removing =>Fig. 1

9 Hexagon bolt, 10 Nm
10 Transverse link
11 Shock absorber

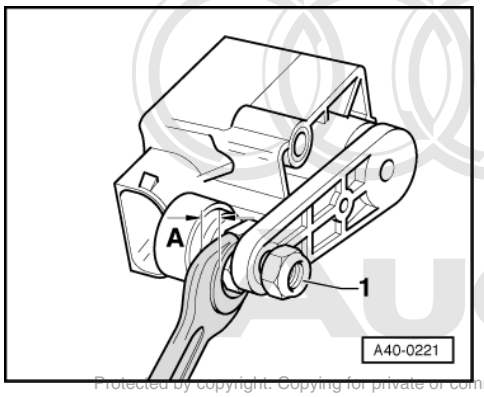

-> Fig.1 Connecting link to levelling sensor

Note:

When attaching the connecting link to the level sensor, use an open-ended wrench (wrench size 10) with a dimension -A- of 4 mm to avoid damaging the gasket.

Tightening torques:

Item 1: 3 Nm

3 - Removing and installing coil spring

3.1 - Removing and installing coil spring

Special tools and workshop equipment required

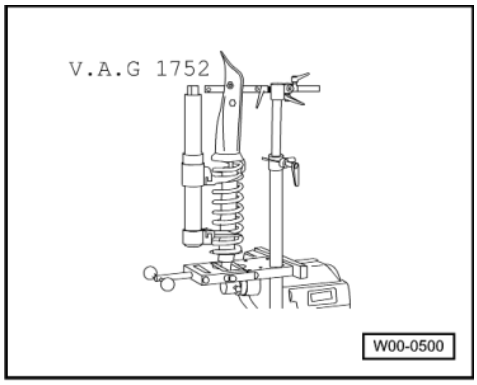

- V.A.G 1752

Removing

- Remove wheel.

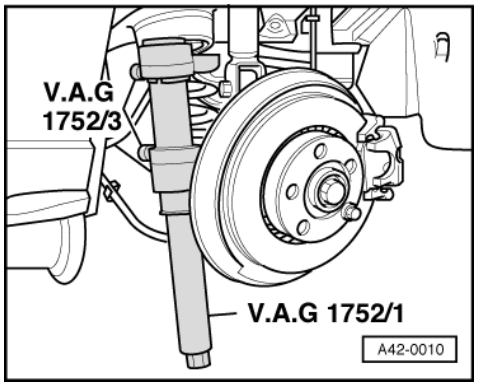

- -> Apply spring compressor -V.A.G 1752/1- with spring attachments V.A.G -V.A.G 1752/3- into the coil spring.

Important Ensure that coil spring is correctly located in spring attachment -VAG 1752/3- - accident risk.

- Tension the coil spring until it can be removed.

When installing, pay special attention to the following:

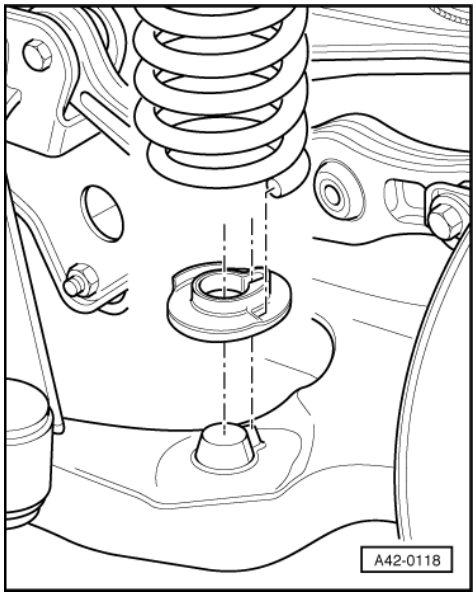

- -> The lower spring pad has a groove in it.
- Insert this groove in lug on trapezium link.
- Rotate the spring end until it touches the stop on the lower spring pad.
- Then rotate the upper spring pad (not illustrated) up stop on the upper spring end.
- Release tension on the spring.

4 - Removing and installing shock absorbers

4.1 - Removing and installing shock absorbers

Note:

For vehicles with headlight range control, refer to =>Page 114 .

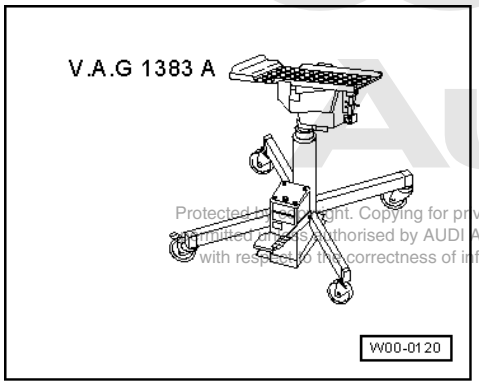

Special tools and workshop equipment required

- V.A.G 1383 A with V.A.G 1359/2

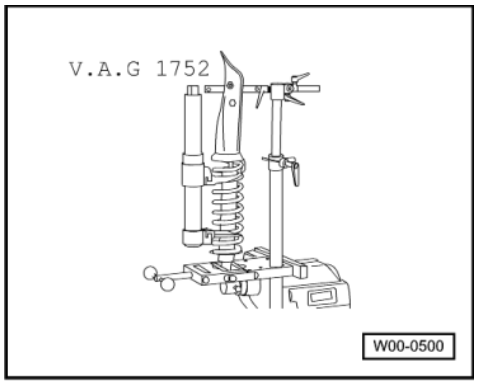

- V.A.G 1752

Removing

- Remove wheel.

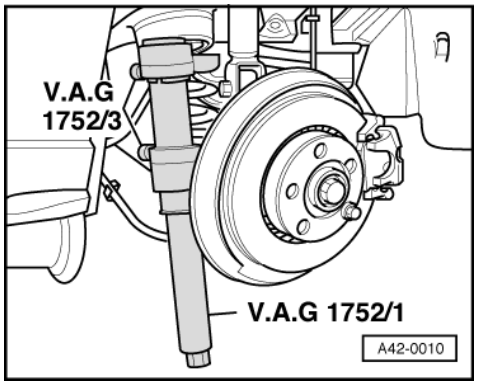

- -> Apply spring compressor -V.A.G 1752/1- with spring attachments V.A.G -V.A.G 1752/3- into the coil spring.

Important Ensure that coil spring is correctly located in spring attachment -VAG 1752/3- - accident risk.

- Tension the coil spring until it can be removed.

- Remove the wheel housing liner.

=> General Body Assembly, Exterior; Repair group 66; Removing and installing front-wheel housing liner Removing and installing front-wheel housing liner

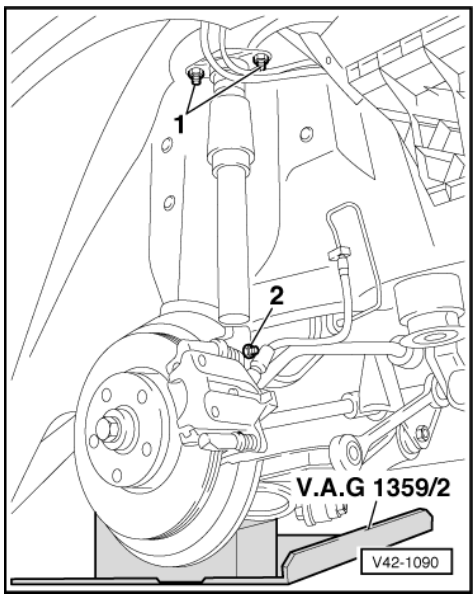

- -> Support the trapezium link (e.g. using gearbox jack V.A.G 1383-A with plate V.A.G 1359/2).
- Unscrew shock absorber bolts -2- and nuts -1-.
- Remove shock absorbers.

When installing, pay special attention to the following:

Note:

Replace bolts and self-locking nuts => Instructions in exploded views from Page 98 .

- -> For tightening the bolted connection -2- proceed as follows:
  Lift the trapezium link until the shock absorber is compressed by approx. 40 - 50 mm.

Tightening torques:

Item 1, Shock absorber to body: 25 Nm
Item 2, Shock absorber to transverse link: 65 Nm

Installing coil spring:

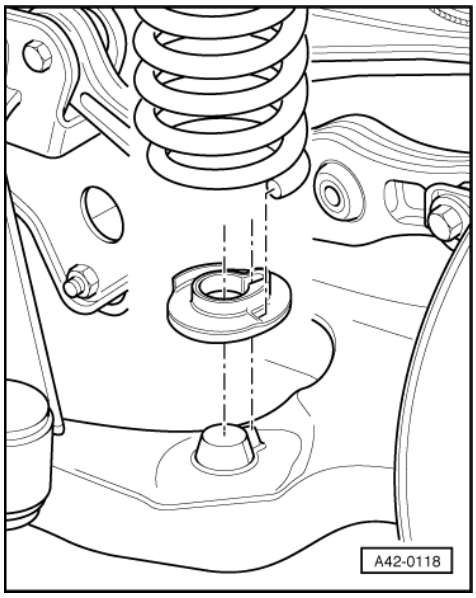

- -> The lower spring pad has a groove in it.
- Insert this groove in lug on trapezium link.
- Rotate the spring end until it touches the stop on the lower spring pad.
- Then rotate the upper spring pad (not illustrated) up stop on the upper spring end.
- Release tension on the spring.

4.2 - Servicing shock absorbers

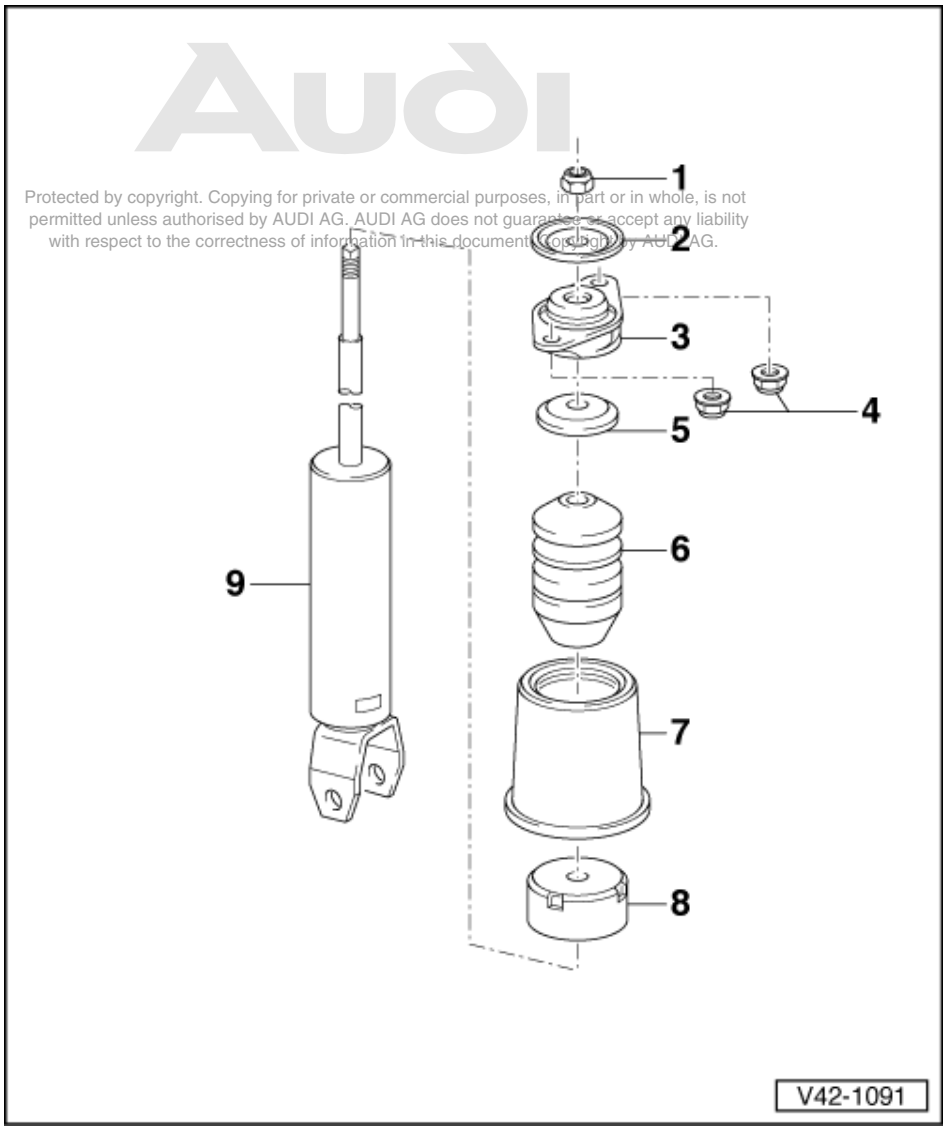

1 Hexagon nut, 30 Nm
- Always replace

2 Dished washer
3 Shock absorber mounting
4 Hexagon nut, 25 Nm
- Always replace

5 Washer
6 Stop buffer
7 Protective sleeve
8 Protective cap

- Attached to shock absorber

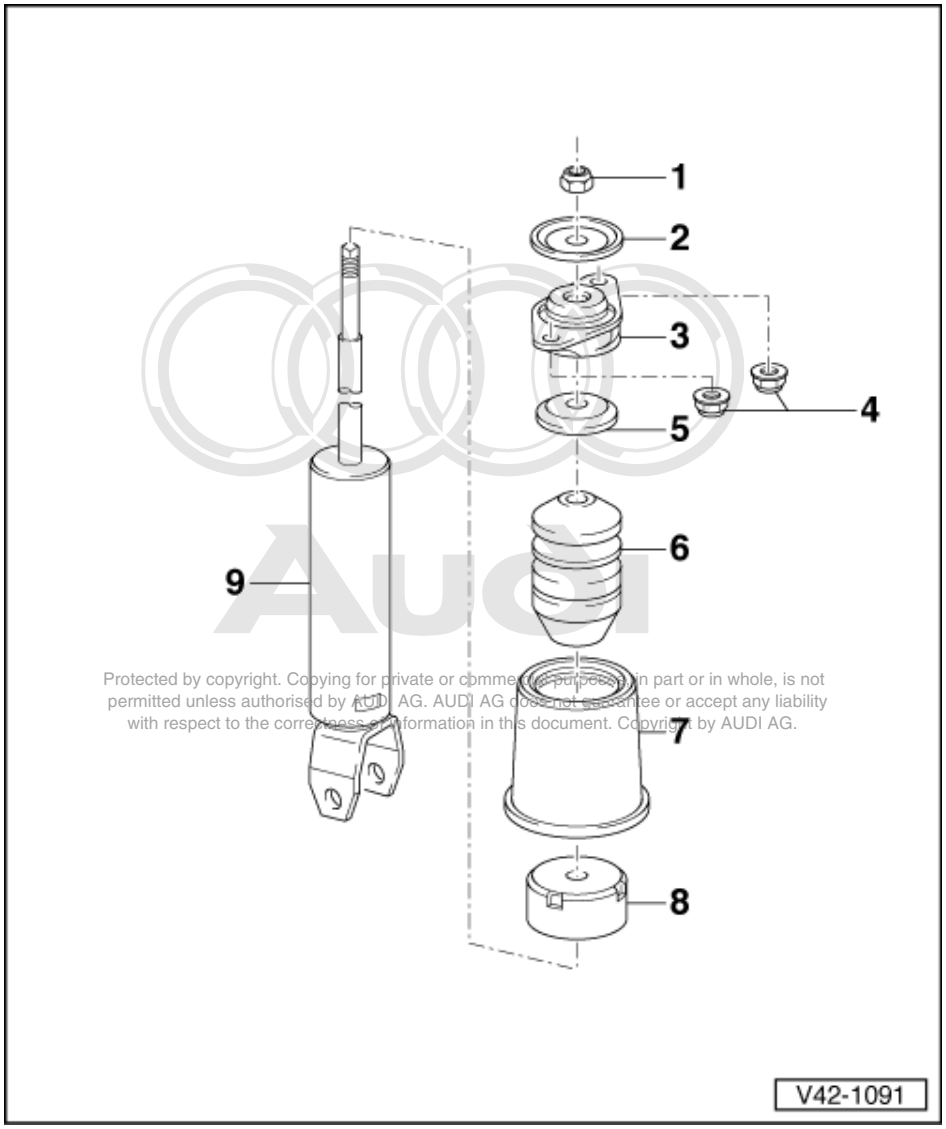

9 Shock absorber

- Removing and installing
  =>Page 117 .
- Note different running gear versions; see vehicle data sticker
  => Page 216 .
- Different versions => Parts microfiche
- Defective shock absorbers must always be drained and have gas removed before being scrapped => Page 4
- Check shock absorber removed => Page 6

5 - Removing and installing wheel bearing housing

5.1 - Removing and installing wheel bearing housing

Notes:

- Perform wheel alignment after completing repair => Page 212

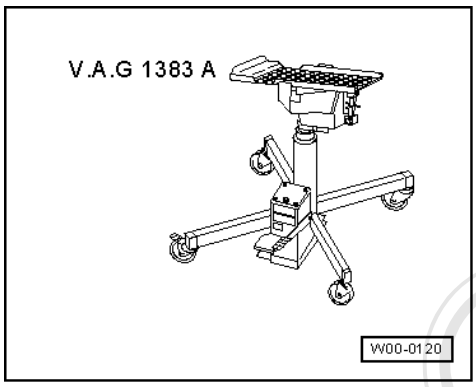

- For vehicles with headlight range control, refer to =>Page 114 .

Special tools and workshop equipment required

- V.A.G 1383 A with V.A.G 1359/2

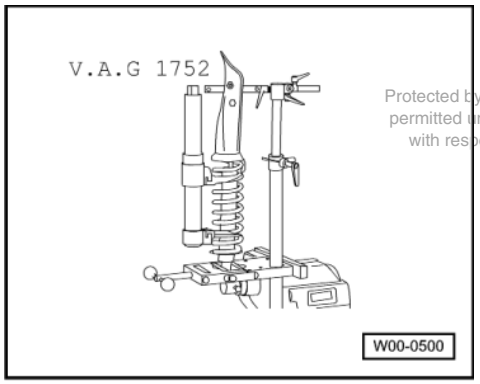

- V.A.G 1752

Removing

- Lever off hub cap from disc wheel or pull off using suction puller -3208-as necessary.

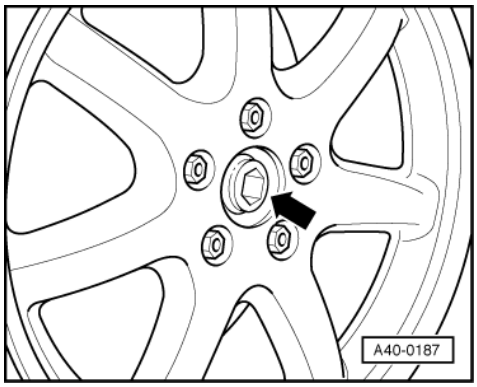

- -> Unscrew the collared bolt -arrow-.

Note =>Page 82

Important Vehicle must be standing on wheels when unscrewing and tightening the collared bolt -Risk of accident-

- Remove wheel.

- Secure brake disc with a wheel bolt.

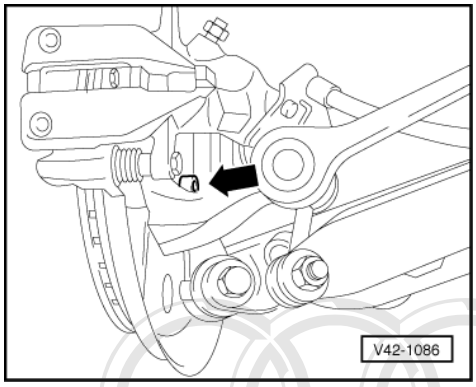

- -> Unscrew the brake caliper bolts (second bolt not visible)

Notes:

- Fasten brake caliper to body using wire.
- Do not suspend the brake caliper from the brake hose.

- Remove brake disc.

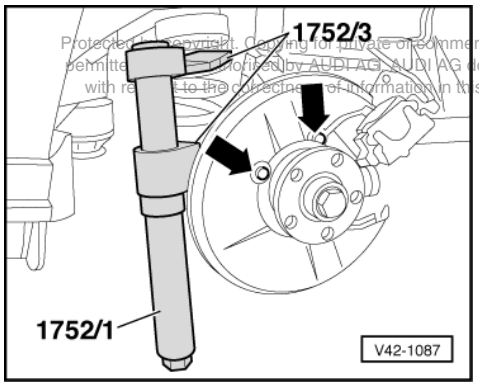

- Unscrew the cover plate -arrows- (third bolt not visible)
- -> Apply spring compressor -V.A.G 1752/1- with spring attachments -V.A.G 1752/3- into the coil spring.

Important Ensure that coil spring is correctly located in spring attachment -VAG 1752/3- - accident risk.

- Tension the coil spring until it can be removed.

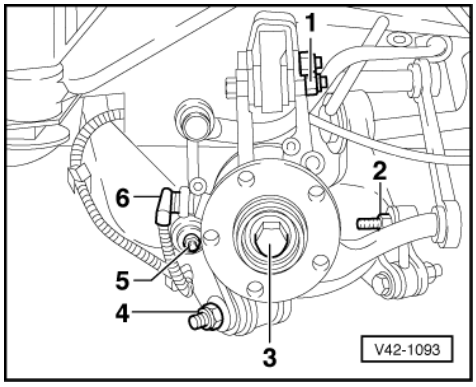

- -> Plugged in ABS sensor: Pull out ABS speed sensor -6-.
- Screwed in ABS sensor: Unscrew ABS speed sensor.
- Loosen hexagon nut -1- and remove eccentric bolt.
- Loosen hexagon nut -2- and pull out track rod.

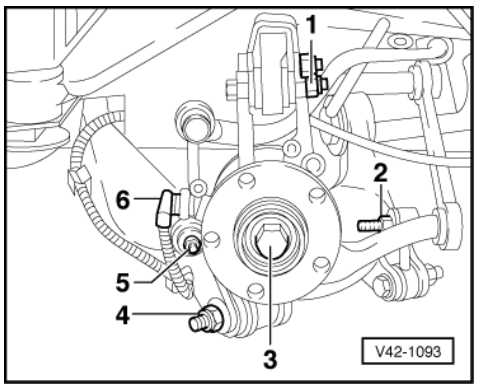

- -> Unscrew nut -5-, press out connecting link from wheel bearing housing.
- Loosen trapezium link/wheel bearing housing mounting -4-, remove bolt.
- Unscrew collared bolt -3-.
- Remove wheel bearing housing.

When installing, pay special attention to the following:

Note:

Replace bolts and self-locking nuts => Instructions in exploded views from Page 98 .

- Plugged in ABS sensor: Press ABS wheel speed sensor into wheel bearing housing up to stop.
- Screwed in ABS sensor: Tighten the ABS speed sensor to 10 Nm.

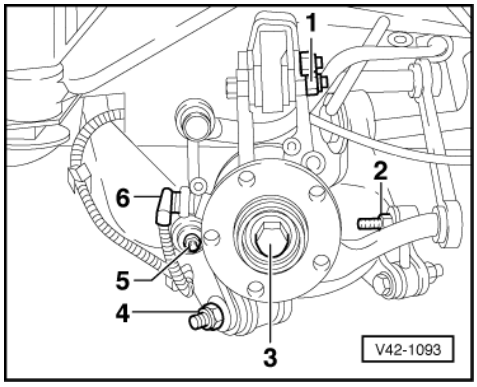

- -> For tightening the bolted connections -1-, -2, and 4- proceed as follows:
  Lift the trapezium link until the shock absorber is compressed by approx. 40 - 50 mm.
  (e.g. using gearbox jack V.A.G 1383-A with plate V.A.G 1359/2).

Tightening torques:

Item 1: 95 Nm
Item 2 up to model year 96: 95 Nm
Item 2 from model year 97: 70 Nm and turn further 90°
Item 4: 80 Nm and turn further 90°
Item 5: 45 Nm

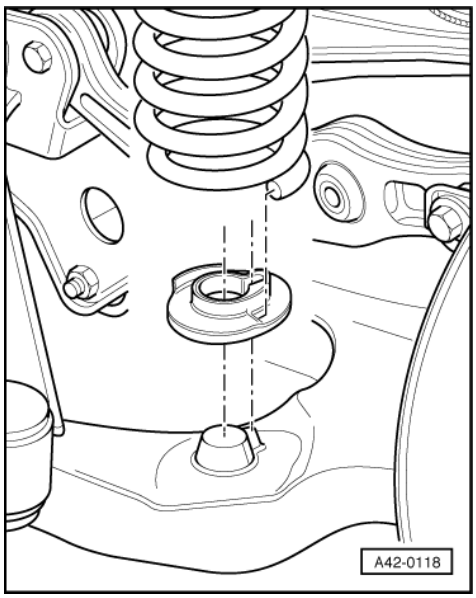

Installing coil spring:

- -> The lower spring pad has a groove in it.
- Insert this groove in lug on trapezium link.
- Rotate the spring end until it touches the stop on the lower spring pad.
- Then rotate the upper spring pad (not illustrated) up stop on the upper spring end.
- Release tension on the spring.
- Bolt the brake shield plate and brake caliper to the wheel bearing housing.

=> Brake System; Repair group 46; Servicing front wheel brake Servicing front wheel brake

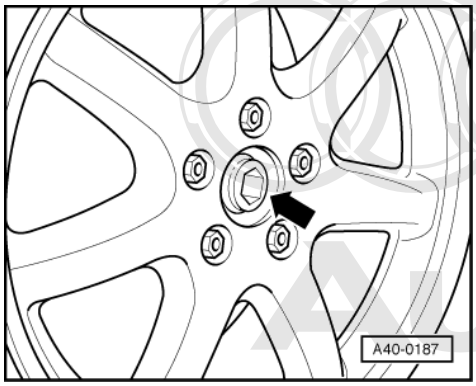

- -> Tighten the collared bolt to 190 Nm and then give it a further 180° turn

Note =>Page 83

Important Vehicle must be standing on wheels when unscrewing and tightening the collared bolt -Risk of accident-

Note:

- Perform wheel alignment =>Page 212

5.2 - Servicing wheel bearing housing with pressed-in wheel bearing

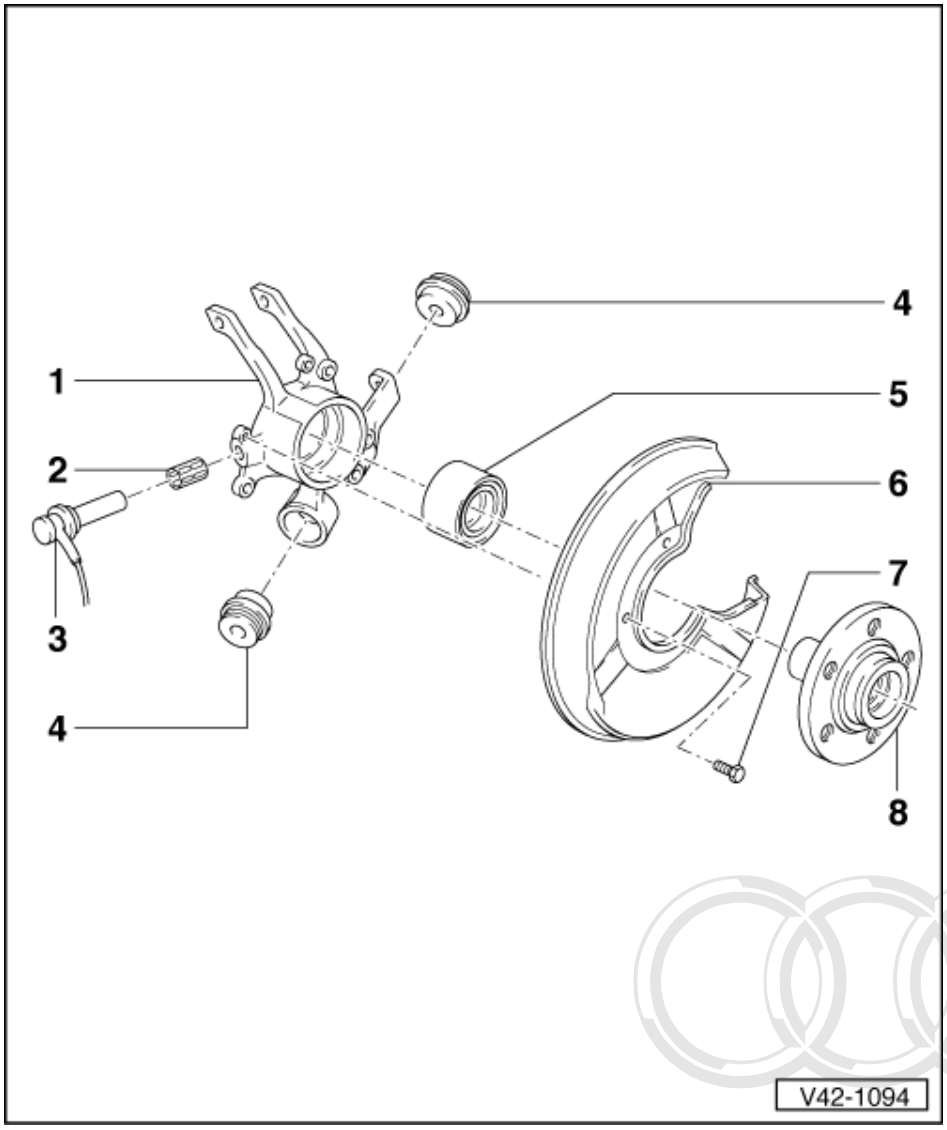

1 Wheel bearing housing
- Removing and installing
  =>Page 121 .

2 Sleeve
- Grease all around with lubricating paste G 000 650 before inserting in wheel bearing housing
- Press up to stop into wheel bearing housing

3 Speed sensor
- Pull out to remove
- When installing, grease all round with lubricating paste G 000 650 and press in up to stop by hand
- Routing => Page 150

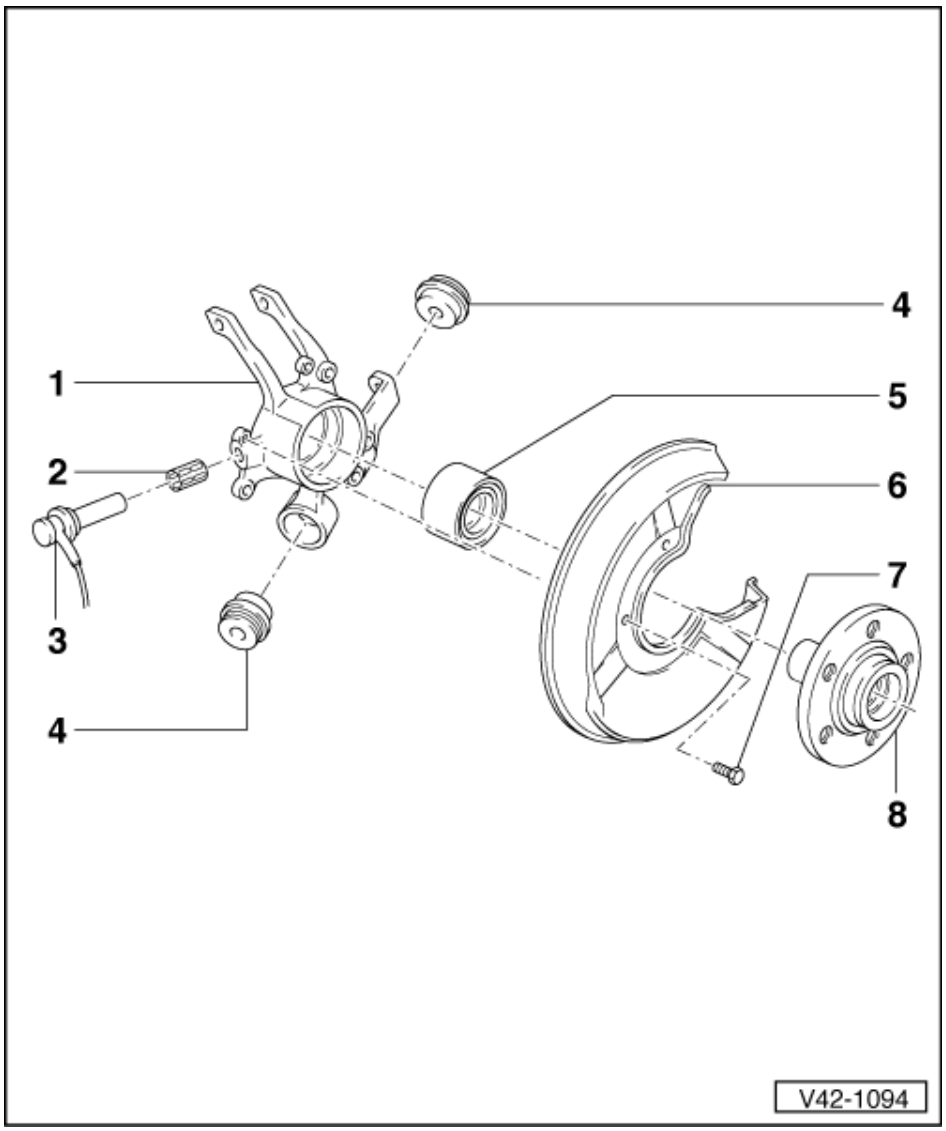

4 Bonded rubber bush
- Always replace bushes on both sides of the vehicle
- Pulling out =>Fig. 6 to 8
- Inserting => Fig. 9

5 Wheel bearing
- Stepped internal diameter
- Installation position: Large internal diameter of wheel bearing points to wheel hub
- Pressing out =>Fig. 2
- Pulling off bearing inner race=> Fig. 3
- Pressing in => Fig. 4

6 Cover plate

7 Hexagon bolt, 10 Nm

8 Wheel hub
- Stepped version
- Pressing out =>Fig. 1
- Pressing in => Fig. 5

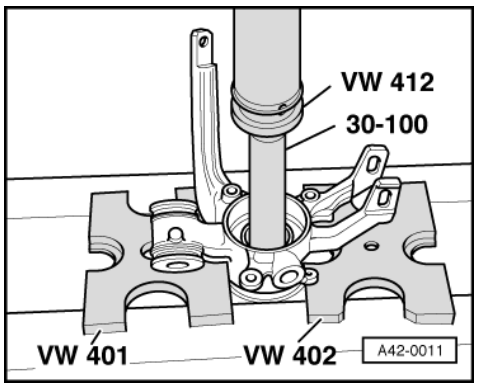

-> Fig.1 Pressing out wheel hub

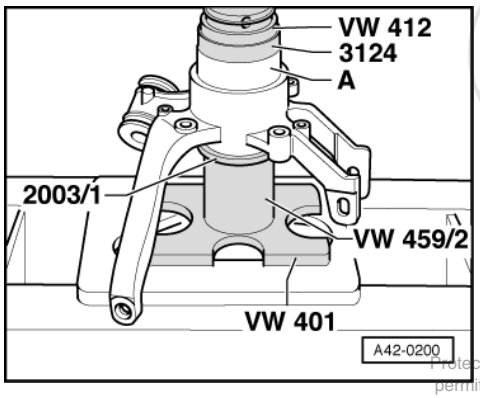

-> Fig.2 Pressing wheel bearing out of wheel bearing housing

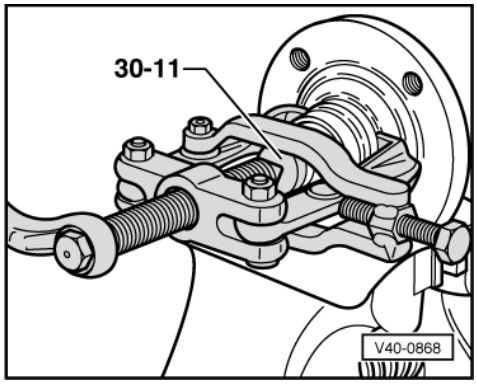

-> Fig.3 Pulling bearing inner race off wheel hub

Always use puller with clamp, e.g. Kukko 204-1 (commercially available).

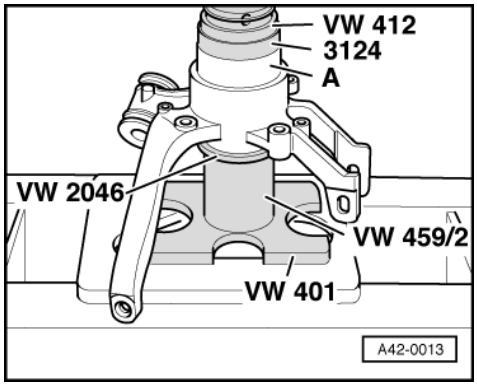

-> Fig.4 Pressing wheel bearing into wheel bearing housing
- Stepped version of wheel bearing.

Note:
Large internal diameter of wheel bearing faces wheel hub.
- Press wheel bearing -A- in up to stop.

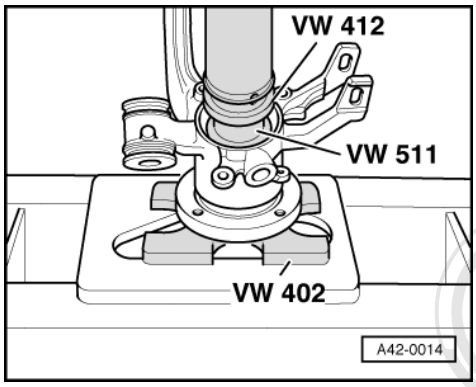

-> Fig.5 Pressing wheel hub into wheel bearing
- When pressing in, thrust pad -VW 511- must only make contact with inner race.

Replacing bonded rubber bush:
Note:
Always replace bushes on both sides of the vehicle.

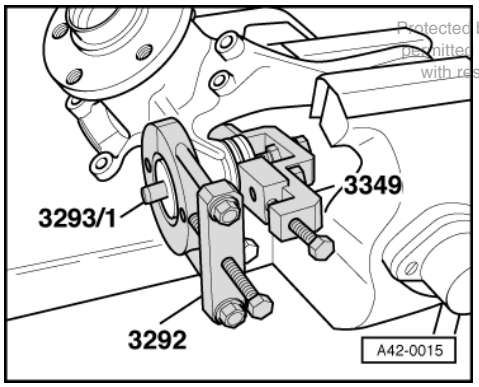

-> Fig.6 Inserting special tools
- Now fit tools -3292- and -3349- so that the pawls engage between the bonded rubber bush flange and the wheel bearing housing.
- Screw the threaded spindle in up to stop. As a result, the bonded rubber bushes protrude slightly from the wheel bearing housing.
- Now insert the pin -3293/1-.

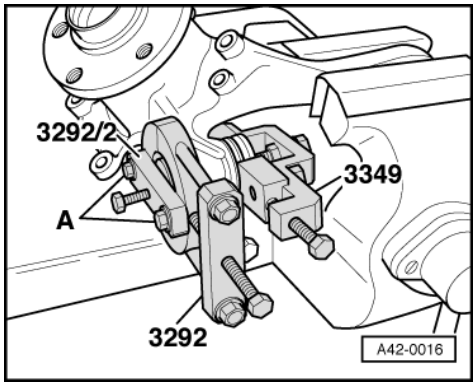

-> Fig.7 Pulling out bonded rubber bush

A = Hexagon bolt M10x80

- Screw in the crossmember -3292/2- using hexagon bolts included.
- Screwing in of spindle into crossmember pushes out one bearing half.

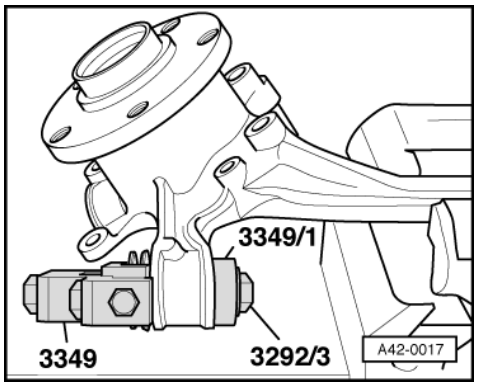

-> Fig.8 Pulling out bonded rubber bush

- Insert the special tool -3349- into the second bearing half.
- Insert the thrust pad -3349/1- with threaded spindle -3292/3-.
- Screwing in of spindle -3292/3- into crossmember pushes out second bearing half.

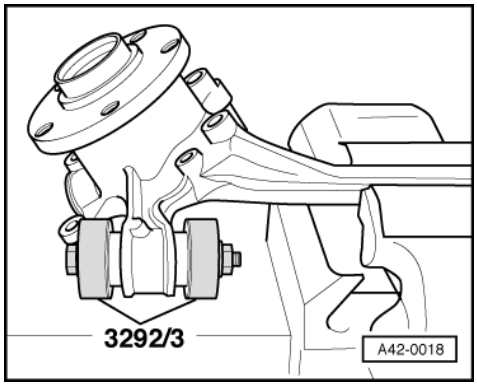

-> Fig.9 Pulling in bonded rubber bush

- Insert the new bearings using thrust pads -3292/3- and threaded spindle into the wheel bearing housing.

Note:

Insert bearings carefully so they are kept straight.

- Screw the thrust pads together up to stop.

5.3 - Servicing wheel bearing housing with bolted wheel bearing

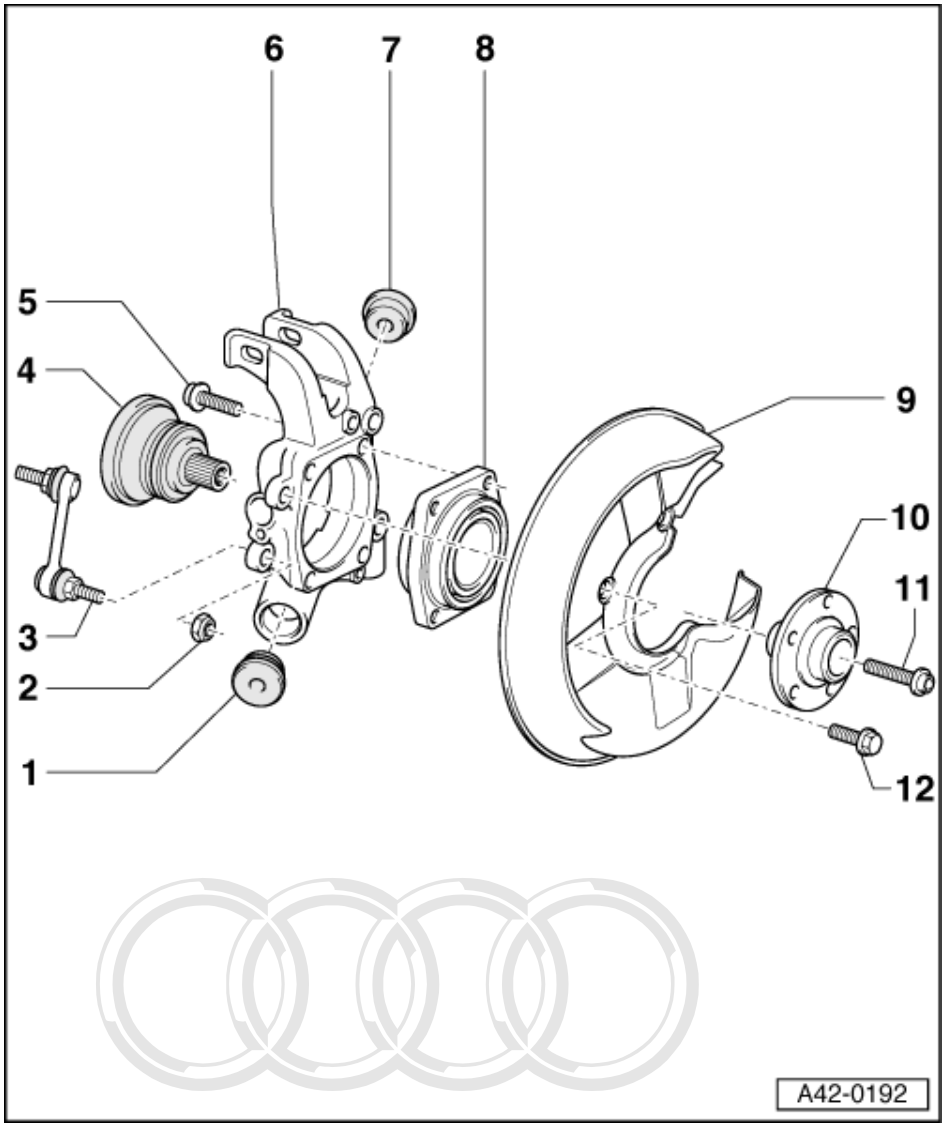

Note:

Remove wheel bearing housing to unscrew wheel bearing =>Page 121 .

1 Bonded rubber bush
- Always replace bushes on both sides of the vehicle
- Pulling out =>Fig. 5 and 6
- Inserting => Fig. 7

2 Self-locking nut, 45 Nm
- Always replace

3 Connecting link
- Connects anti-roll bar to wheel bearing housing

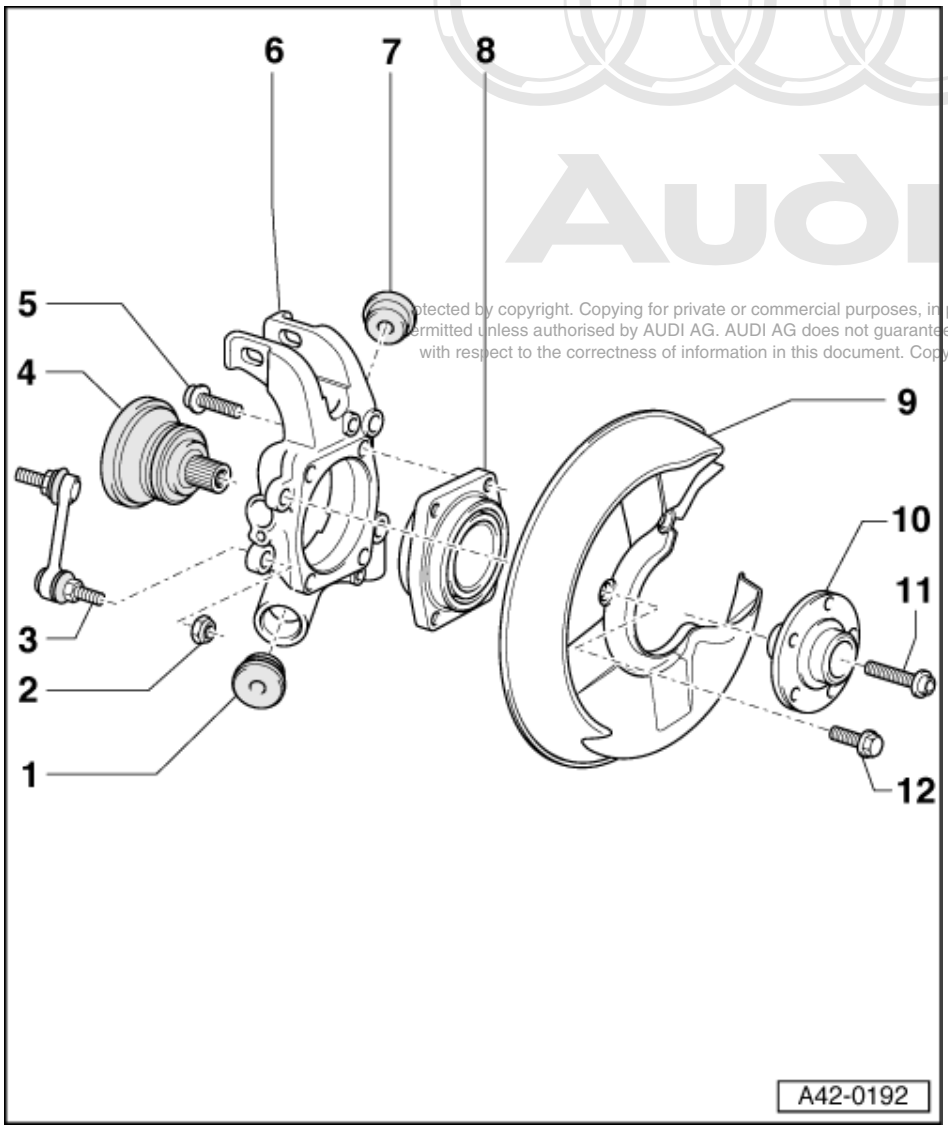

4 Stub axle/drive shaft

- Removing and installing drive shaft => Page 160
- Servicing drive shaft=>Page 165 .

5 Hemispherical collared bolt

- To unscrew remove wheel bearing housing -Item 6 -
- Tighten to 80 Nm and then give a further 90° turn

6 Wheel bearing housing

- Removing and installing =>Page 121

7 Bonded rubber bush

- Always replace bushes on both sides of the vehicle
- Pulling out =>Fig. 5 and 6
- Inserting => Fig. 7

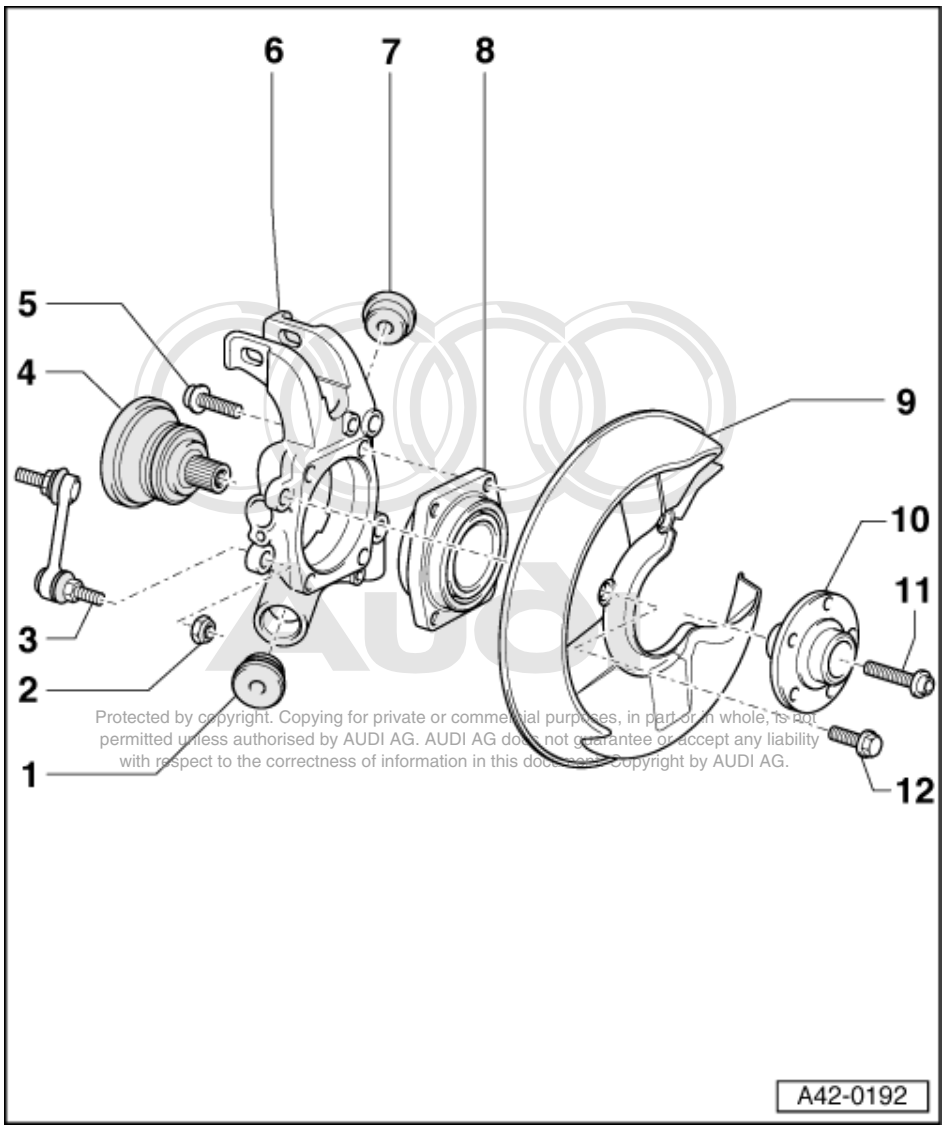

8 Wheel bearing
- Screwed in version
- Removing and installing =>Fig. 1
- To unscrew remove wheel bearing housing -Item 6 -

9 Cover plate

10 Wheel hub
- Pressing out =>Fig. 2
- Pressing in => Fig. 4
- Lightweight wheel hub =>Page 137

11 Collared bolt
- Always replace
- Tighten to 190 Nm and then give a further 180° turn
- Switched from hexagon head to hexagon socket. Mixed combinations permitted
- Note =>Page 82
- Vehicle must be standing on wheels for unscrewing and tightening (risk of accident)

12 Hexagon bolt, 10 Nm

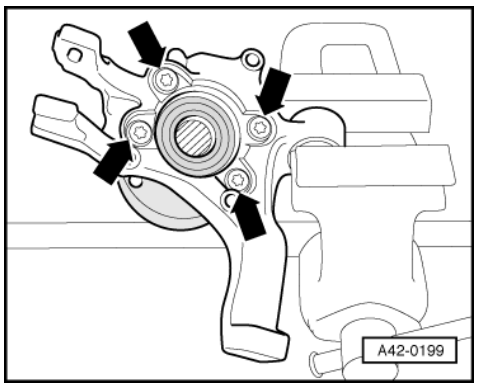

-> Fig.1 Removing and installing wheel bearing

- Wheel bearing housing removed.

- Unscrew the hemispherical collared bolts -arrows-to remove.
- To install tighten hemispherical collared bolts to 80 Nm and turn an additional 90°.

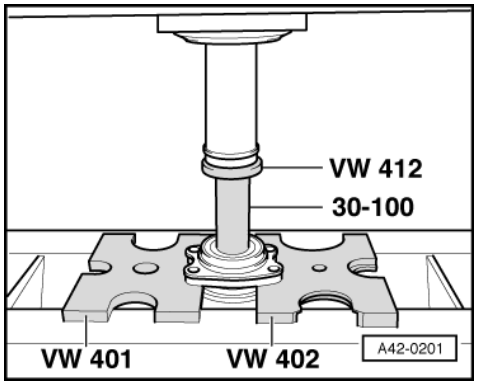

-> Fig.2 Pressing out wheel hub from wheel bearing

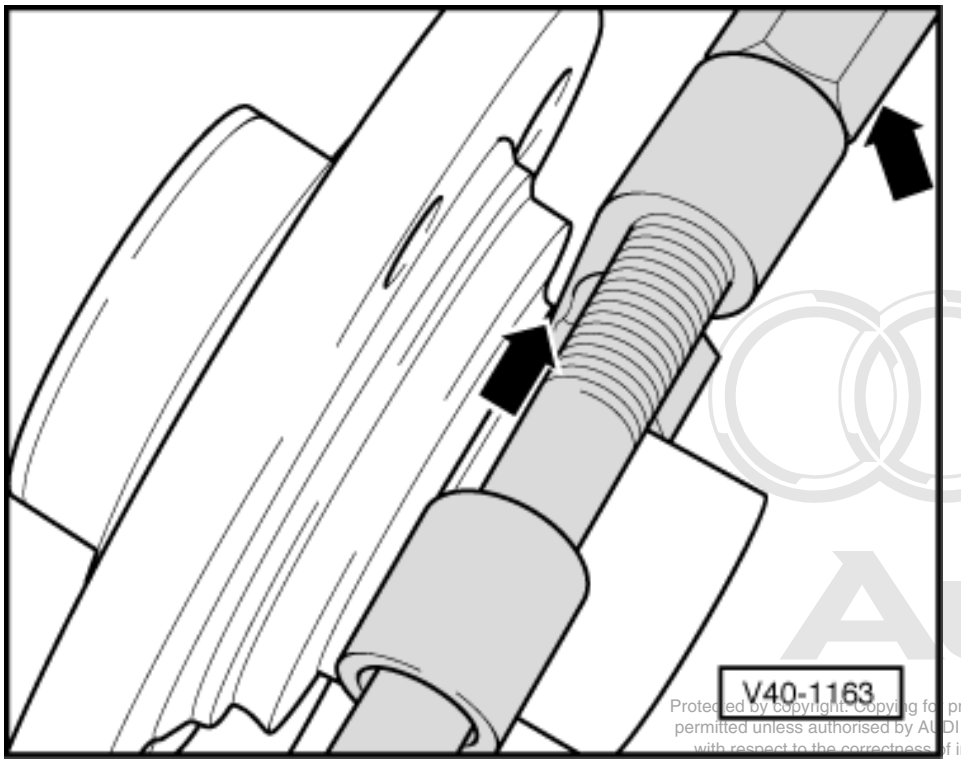

-> Fig.3 Pressing bearing inner race off wheel hub

- Attach separating tool into circular groove of bearing inner race -arrow- and pre-tension with spindle.

Note:
Use commercially available separating device e.g. Kukko 15-17.

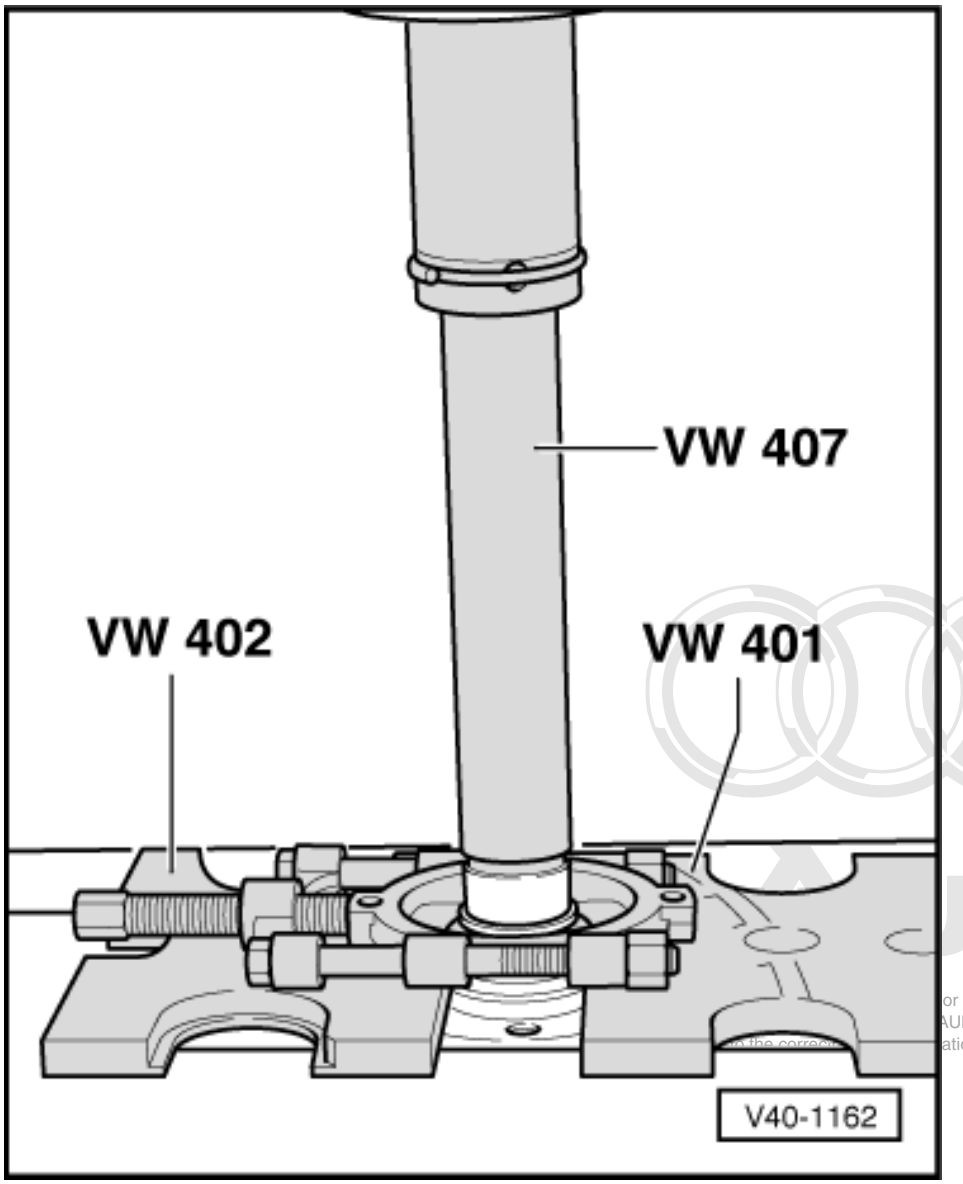

- -> Press bearing inner race from wheel hub.

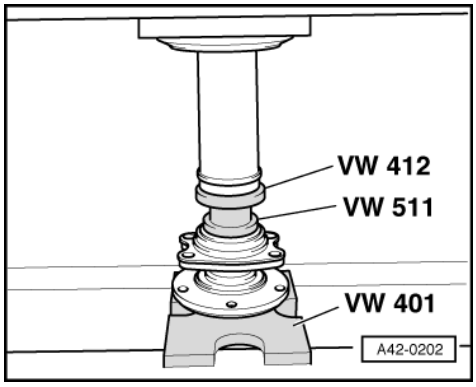

-> Fig.4 Pressing wheel hub into wheel bearing

- When pressing in, thrust pad -VW 511- must only make contact with inner race.

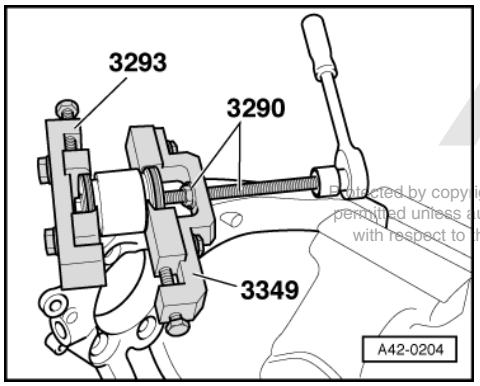

-> Fig.5 Pressing out first bonded rubber bush

Note:

The bonded rubber bush in the wheel bearing housing consists of 2 parts. Removing and installing is therefore undertaken in two work sequences.

- Slightly bend over metal collar of bonded rubber bush.
- Now fit tools -3293- and -3349- so that the pawls engage between the bonded rubber bush flange and the wheel bearing housing.
- Pull out one bonded rubber bush using nut, washer, and threaded spindle taken from 3290.

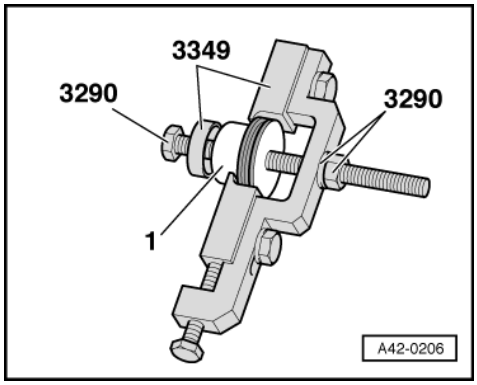

-> Fig.6 Pressing out second bonded rubber bush

Arrangement of tools

1 - Bonded rubber bush

Note:

Arrangement of tools is shown here without wheel bearing housing. The actual work procedure is illustrated in Fig.

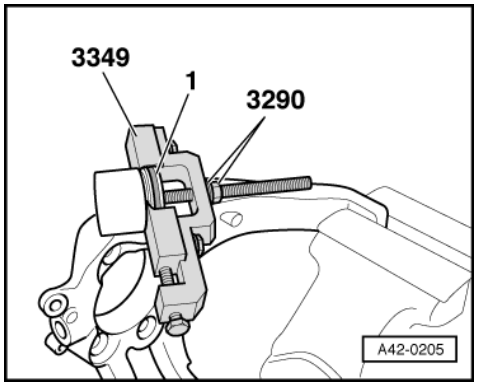

- -> Insert thrust pad 3349/1 and insert spindle from 3290.
- Now attach special tool 3349 at bonded rubber bush -1-.
- Pull out the bonded rubber bush by turning the nut on the threaded spindle.

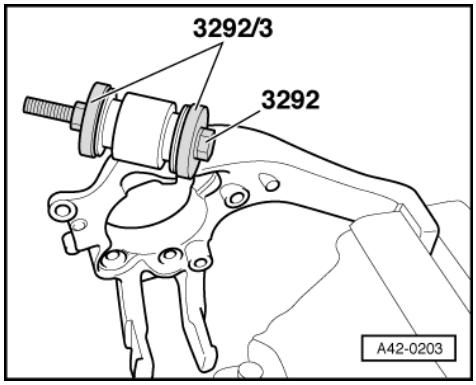

-> Fig.7 Pulling in bonded rubber bush

- Insert the new bushes using thrust pads 3292/3 and threaded spindle taken from 3292 into the wheel bearing housing.

Note:

Insert bearings carefully so they are kept straight.

- Screw the thrust pads together up to stop.

6 - Lightweight wheel hub

6.1 - Lightweight wheel hub

6.2 - Distinguishing features

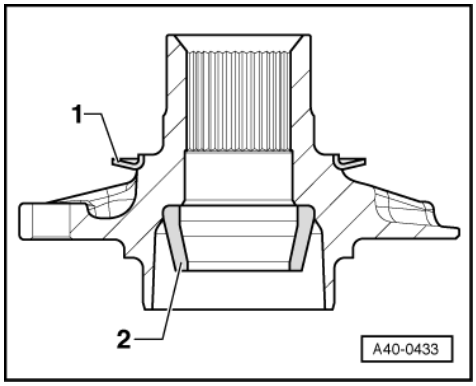

The lightweight wheel hub differs from conventional wheel hubs in its centrifugal disc -1- and sleeve -2-.

The lightweight wheel hub must only be used with the corresponding wheel bearings (see Parts Catalogue).

Lightweight wheel hubs must only be used on the vehicle if they were originally fitted in the factory.

The centrifugal disc becomes deformed when removing the wheel bearing and must therefore be renewed.

6.3 - Removing/installing

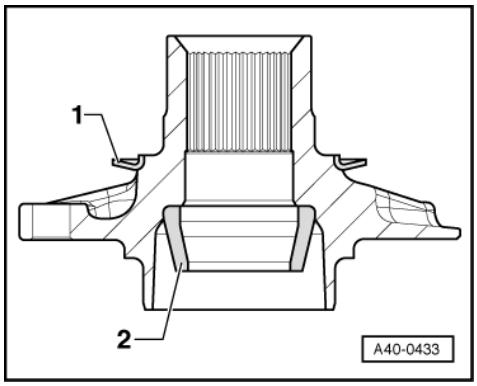

- -> Carefully lever off the old centrifugal ring -1-, e.g. using a screwdriver.

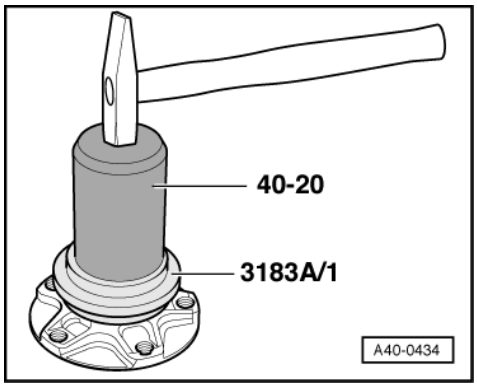

- Position the centrifugal disc on the wheel hub.
- -> Drive the centrifugal ring home as shown in the illustration.

Note:
The centrifugal disc must be flush with the wheel bearing flange.

7 - Removing and installing transverse link

7.1 - Removing and installing transverse link

Notes:
- Perform wheel alignment after completing repair => Page 212
- For vehicles with headlight range control, refer to =>Page 114

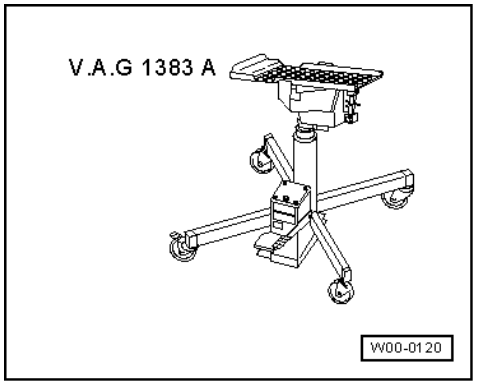

Special tools and workshop equipment required

- V.A.G 1383 A with V.A.G 1359/2

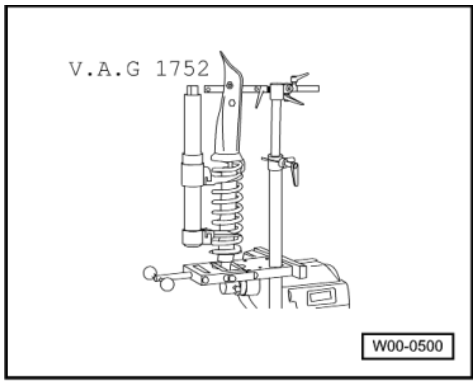

- V.A.G 1752

Removing

- Remove wheel.

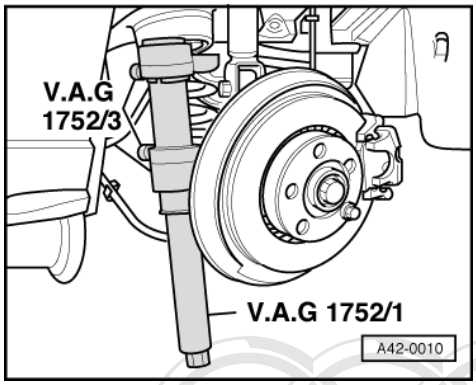

- -> Apply spring compressor -V.A.G 1752/1- with spring attachments V.A.G -V.A.G 1752/3- into the coil spring.

Important
Ensure that coil spring is correctly located in spring attachment -VAG 1752/3- - accident risk.

- Tension the coil spring until it can be removed.
- If fastened to the transverse link, remove wiring to ABS speed sensor from transverse link.

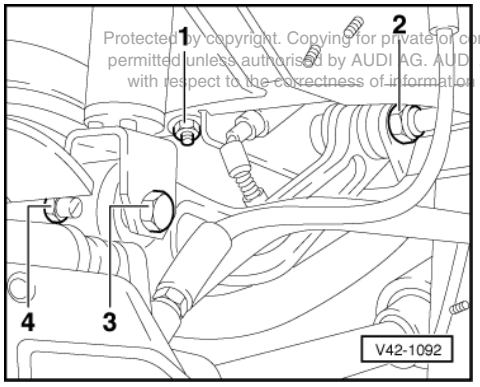

- -> Unscrew nut -1- for fuel tank carrier.

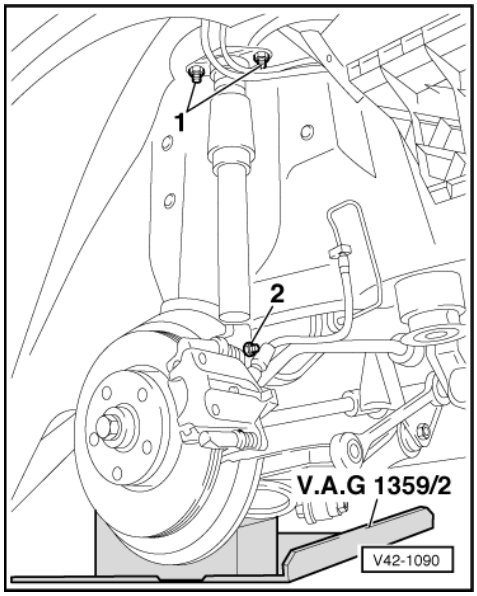

- -> Support the trapezium link (e.g. using gearbox jack V.A.G 1383-A with plate V.A.G 1359/2).

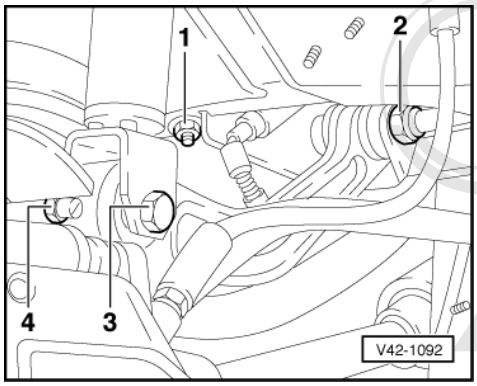

- -> Unscrew shock absorber bolt -3-.
- Loosen nut -4- and remove eccentric bolt.
- Loosen nut -2-, push fuel tank carrier downwards and remove bolt.
- Remove transverse link.

When installing, pay special attention to the following:

Note:

Replace bolts and self-locking nuts => Instructions in exploded views from Page 98 .

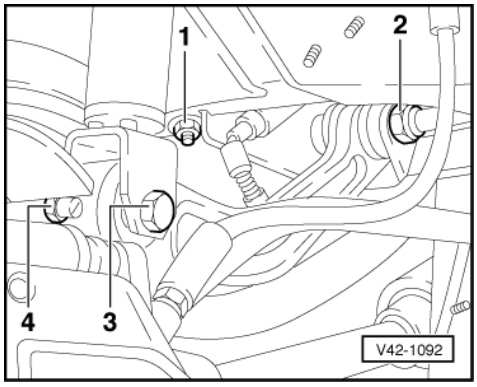

- -> For tightening the bolted connection -2- and 3- proceed as follows:
  Lift the trapezium link until the shock absorber is compressed by approx. 40 - 50 mm.

Tightening torques:

Item 1: 25 Nm
Item 2: 80 Nm and turn further 90°
Item 3: 65 Nm
Item 4: 95 Nm

Installing coil spring:

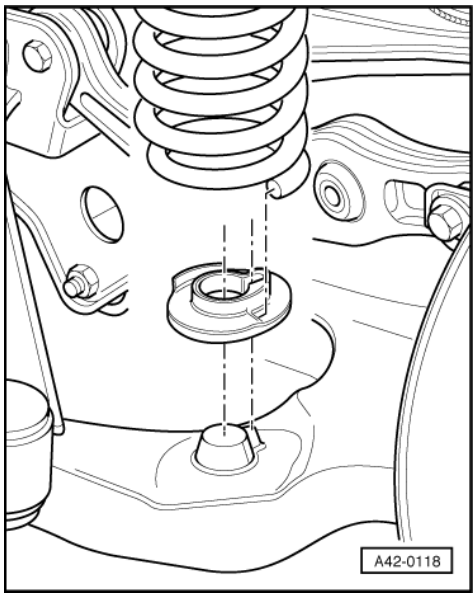

- -> The lower spring pad has a groove in it.
- Insert this groove in lug on trapezium link.
- Rotate the spring end until it touches the stop on the lower spring pad.
- Then rotate the upper spring pad (not illustrated) up stop on the upper spring end.
- Release tension on the spring.

7.2 - Replacing bushes for transverse links

Notes:

- Always replace bushes on both sides of the vehicle.

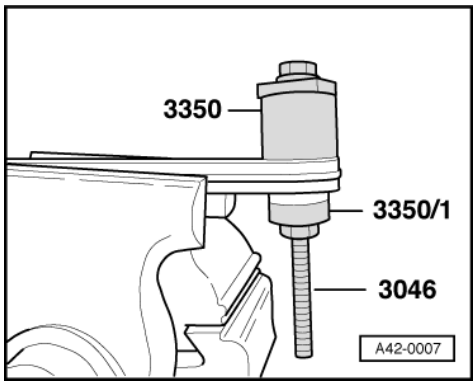

- Always use soft jaws when clamping aluminium links.

-> Fig.1 Pulling out bonded rubber bush

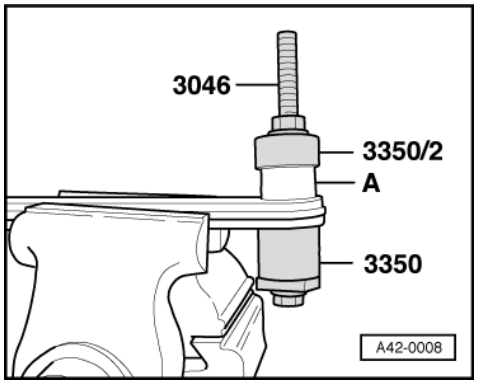

-> Fig.2 Pulling in both outer bonded rubber bushes

- Pull bush in up to stop.

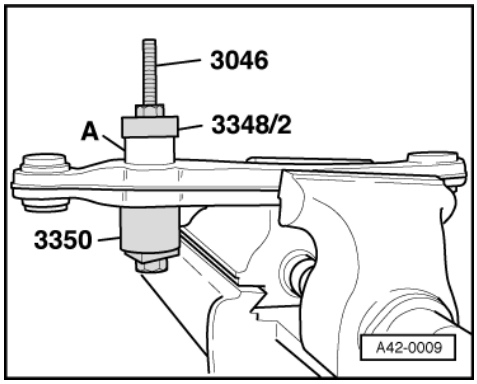

-> Fig.3 Pulling in centre bonded rubber bush

- Pull bush in up to stop.

8 - Removing and installing trapezium link

8.1 - Removing and installing trapezium link

Notes:

- Perform wheel alignment after completing repair => Page 212
- Please note Fig. 113

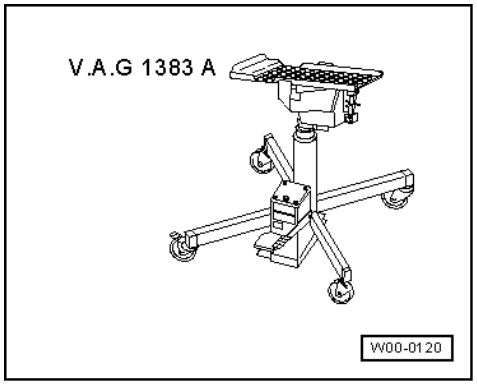

- For vehicles with headlight range control, refer to =>Page 114 .

Special tools and workshop equipment required

- V.A.G 1383 A with V.A.G 1359/2

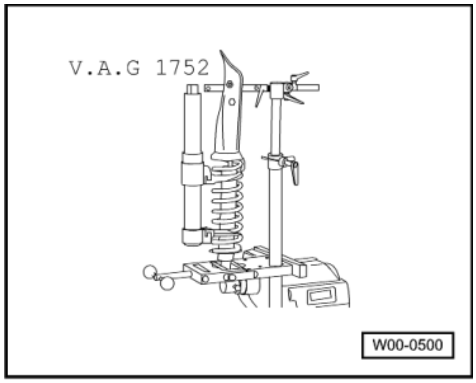

- V.A.G 1752

Removing

- Lever off hub cap from disc wheel or pull off using suction puller -3208- as necessary.

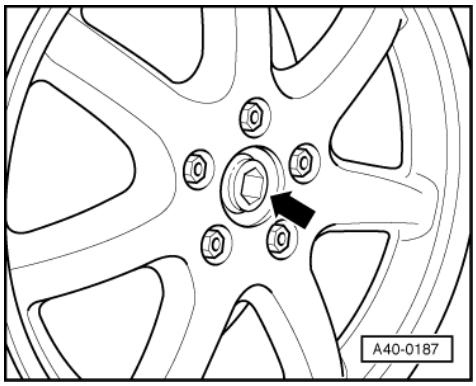

- -> Unscrew the collared bolt -arrow-.

Important Vehicle must be standing on wheels when unscrewing and tightening the collared bolt -Risk of accident-

- Remove wheel.

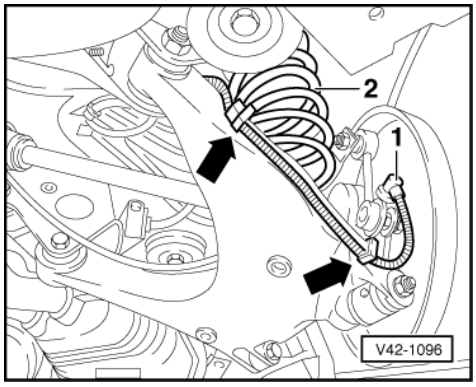

- -> Plugged in ABS sensor: Pull out ABS speed sensor -1-.
- Screwed in ABS sensor: Unscrew ABS speed sensor.
- If fastened to the trapezium link remove wiring from retainers -arrows-.

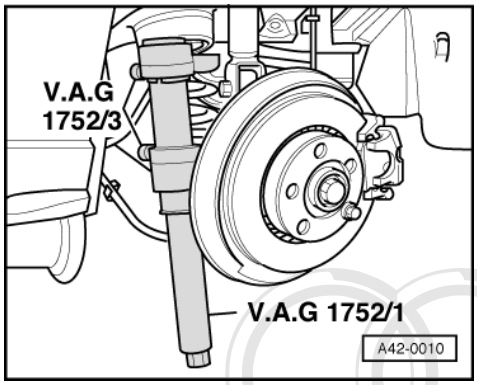

- -> Apply spring compressor -V.A.G 1752/1- with spring attachments -V.A.G 1752/3- into the coil spring.

Important Ensure that coil spring is correctly located in spring attachment -VAG 1752/3- - accident risk.

- Tension the coil spring until it can be removed.

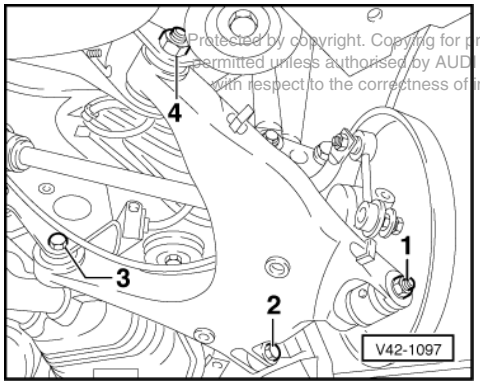

- -> Unbolt the trapezium link (items 1 to 4).
- Remove trapezium link in downwards direction.

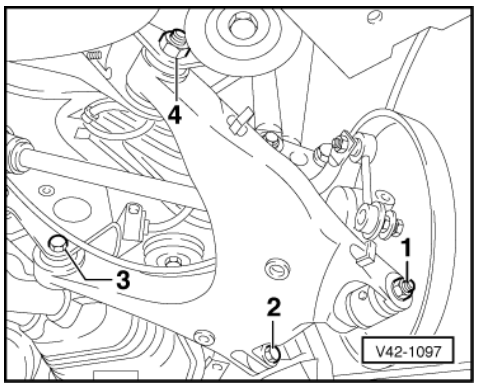

When installing, pay special attention to the following:

Note:

Replace bolts and self-locking nuts => Instructions in exploded views from Page 98 .

- -> For tightening the bolted connections -1- to 4- proceed as follows:
  Lift the trapezium link until the shock absorber is compressed by approx. 40 - 50 mm.
  (e.g. using gearbox jack V.A.G 1383-A with plate V.A.G 1359/2).

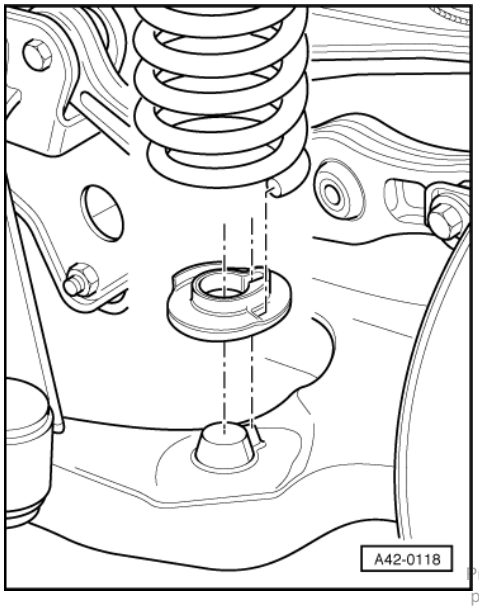

Tightening torques:

Item 1 through 4: 80 Nm and turn further 90°

Installing coil spring:

- -> The lower spring pad has a groove in it.
- Insert this groove in lug on trapezium link.
- Rotate the spring end until it touches the stop on the lower spring pad.
- Then rotate the upper spring pad (not illustrated) up stop on the upper spring end.
- Release tension on the spring.

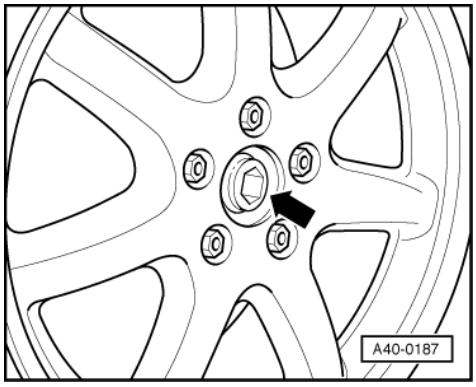

- -> Tighten the collared bolt to 190 Nm and then give it a further 180° turn

Important Vehicle must be standing on wheels when unscrewing and tightening the collared bolt -Risk of accident-

Note:

- Perform wheel alignment =>Page 212

8.2 - Replacing bush for trapezium link

Notes:

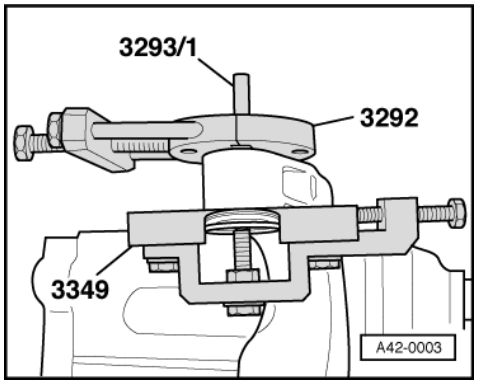

- Always replace bushes on both sides of the vehicle.
- Always use soft jaws when clamping aluminium links.

Replacing two-part bush

-> Fig.1 Inserting special tools

- Now fit tools -3292- and -3349- so that the pawls engage between the bonded rubber bush flange and the trapezium link.
- Screw the threaded spindle in up to stop. As a result, the bonded rubber bushes protrude slightly from the trapezium link.

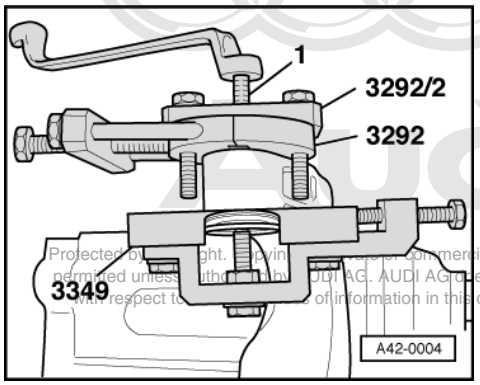

- Now insert the pin -3293/1-.

-> Fig.2 Pulling out bonded rubber bush

- Screw in the crossmember -3292/2- using hexagon bolts included.
- Screwing in of spindle -1- into crossmember pushes out one bearing half.

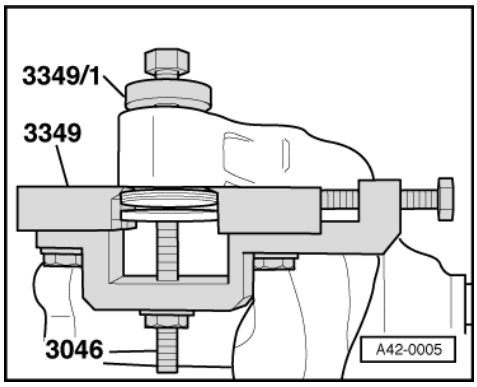

-> Fig.3 Pulling out bonded rubber bush
- Insert the special tool -3349- into the second bearing half.
- Insert the thrust pad -3349/1- with threaded spindle -3046-.
- Screwing in of spindle -3046- into crossmember pushes out second bearing half.

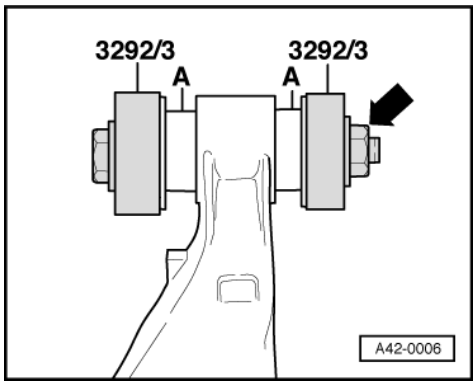

-> Fig.4 Pulling in bonded rubber bush
- Insert the new bearings using thrust pads -3292/3- and threaded spindle into the wheel bearing housing.

Note:
Insert bearings carefully so they are kept straight.
- Screw the thrust pads together up to stop.

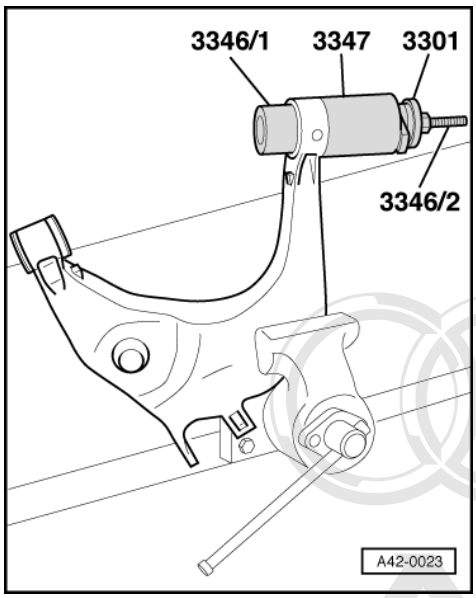

Replacing one-piece bush
-> Fig.5 Pulling out bonded rubber bush

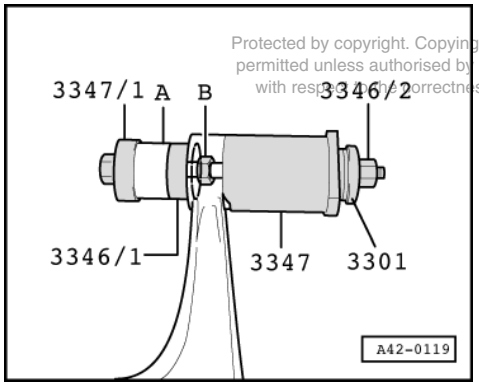

-> Fig.6 Pulling in bonded rubber bush

- Assemble bush -A- with thrust pad -3347/1-, guide piece -3346/1-, spindle -3346/2 and hexagon nut -B-.
- Pull in bush using sleeve -3347-, thrust pad -3301- and spindle -3346/2- and pull bush in up to stop.

9 - Removing and installing subframe

9.1 - Removing and installing subframe

Notes:

- For vehicles with headlight range control, refer to =>Page 114 .
- We have described the removal procedure for a vehicle with 4WD.
- The procedures show how to remove the subframe as a complete unit (i.e. with rear differential, wheel bearing housings, suspension links...).
- Perform wheel alignment after completing repair => Page 212

Please note

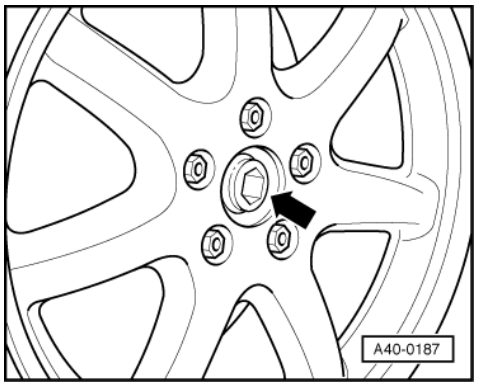

-> Loosen the collared bolt first if:

- Additional work needs to carried out on the suspension
- The subframe needs to be replaced
- The subframe bushes are to be replaced

Important
Vehicle must be standing on wheels when unscrewing and tightening the collared bolt
-Risk of accident-

Special tools and workshop equipment required

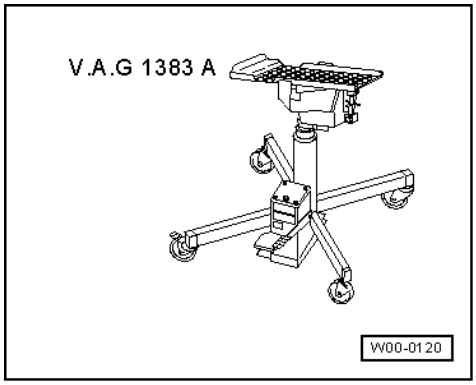

- V.A.G 1383 A with V.A.G 1359/2

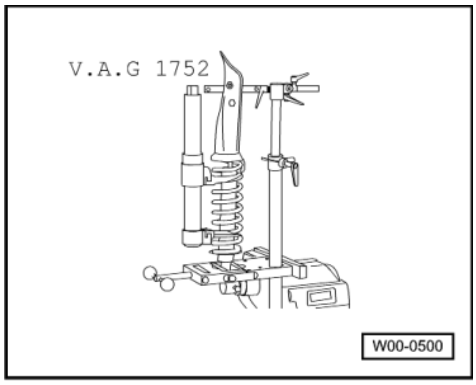

- V.A.G 1752

Removing
- Remove wheels.
- Secure brake discs with a wheel bolt.
- Remove rear exhaust system section.

=> 6-cylinder Engine, Mechanical Components; Repair group 26
=> 8-cylinder Engine, Mechanical Components; Repair group 26
- Remove end muffler heat insulation.

=> 6-cylinder Engine, Mechanical Components; Repair group 26
=> 8-cylinder Engine, Mechanical Components; Repair group 26

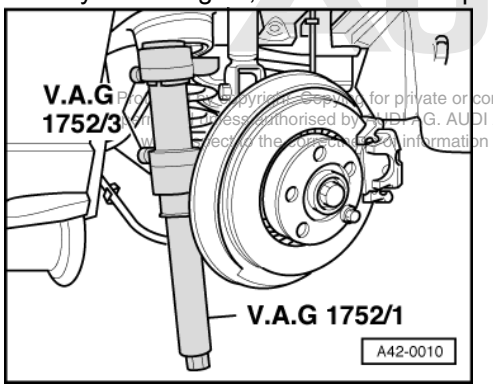

- -> Apply spring compressor -V.A.G 1752/1- with spring attachments -V.A.G 1752/3- into the coil spring.

> Important
> Ensure that coil spring is correctly located in spring attachment -VAG 1752/3- - accident risk.

- Tension the coil spring until it can be removed.

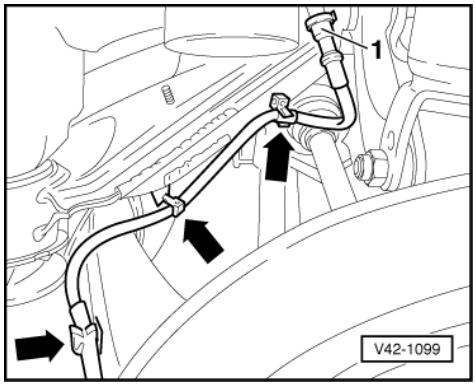

- -> Unplug left and right connectors for ABS speed sensor -1- and set wiring aside -arrows-.

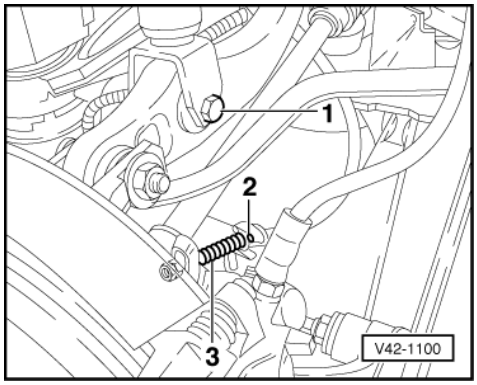

- -> Detach the handbrake cable -3- from the brake caliper.
- Press out the clip -2- and pull out the handbrake cable to the rear.
- Unscrew the shock absorber from the transverse link -1-.

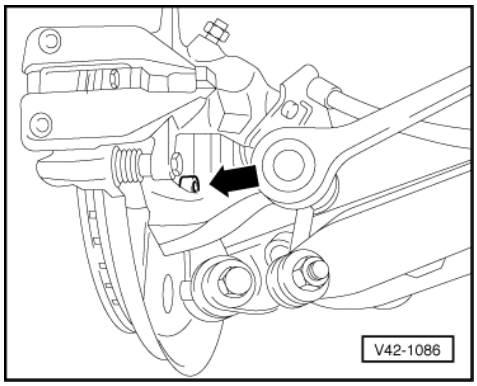

- -> Unscrew the brake caliper bolts (second bolt not visible)

Notes:

- Fasten brake caliper to body using wire.
- Do not suspend the brake caliper from the brake hose.

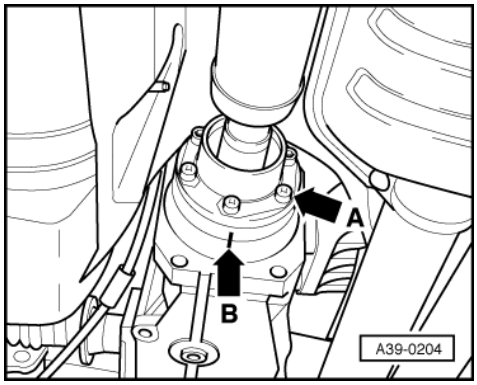

- -> Check for a factory marking (coloured dot) on the propshaft and on the propshaft flange on the final drive at the rear. If there is no mark, make a coloured mark on rear final drive to indicate the position of propshaft flange -arrow B-.

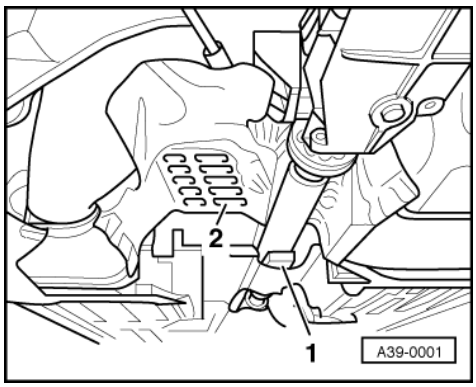

- -> Support propshaft using a wooden wedge -1- upwards against heat shield.
- Remove heat shield -2-.
- Remove securing bolts of propshaft at rear final drive.

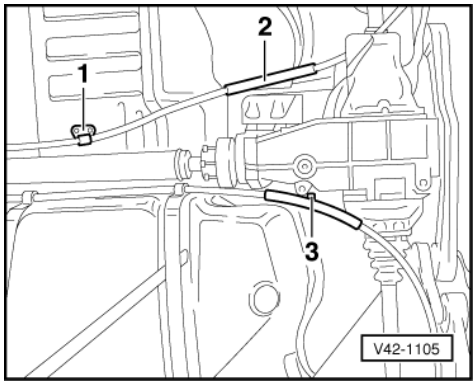

- -> Loosen the holder -1-.
- Pull handbrake cable rearwards out of guide -2-.
- Unscrew hexagon bolt -3-. Detach handbrake cable guide.

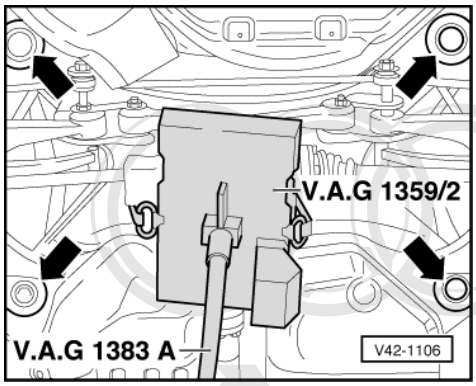

- -> Position gearbox jack -V.A.G 1383-A- with plate -V.A.G 1359/2- at rear differential.
- Tension the belt around the rear differential.

Important
Before -LOOSENING- subframe bolts secure vehicle against tilting over (e.g. load luggage compartment with an approx.

- Unscrew the subframe bolts -arrows-.
- Carefully lower the subframe.

When installing, pay special attention to the following:

Note:

Replace bolts and self-locking nuts => Instructions in exploded views from Page 98 .

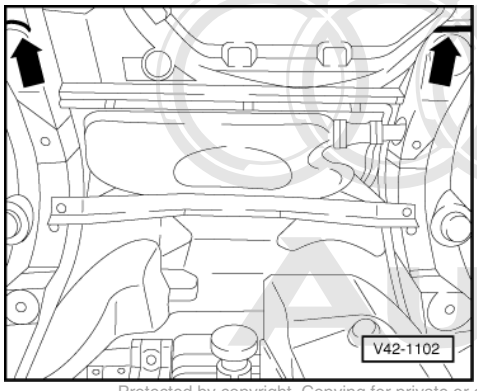

- -> Ensure that tank vent lines -arrows-.are properly installed when inserting the subframe. These must not be damaged or pinched.
- Always replace subframe bolts and washers: 150 Nm and turn further 90°
- Bolt the brake caliper to the wheel bearing housing.

=> Brake System; Repair group 46; Servicing front wheel brake Servicing front wheel brake

- Route the handbrake cables and attach them to the brake calipers.
- Install heat insulation to propshaft tunnel.
- Propshaft to rear differential, 55 Nm.

=> Manual Gearbox; Repair group 39; Removing and installing propshaft Removing and installing propshaft

=> Automatic Gearbox; Repair group 39; Removing and installing propshaft Removing and installing propshaft

Notes:

- It is essential that the locking compound remaining in the threads in the flange shafts on the gearbox and rear final drive is cleaned out after removing the propshaft. Otherwise there is a danger that the new bolts will seize when they are screwed in and then shear if they have to be removed later.
- The threaded holes can be cleaned with a thread tap.
- Renew gaskets on flange shafts (detach protective foil and stick gasket onto flange shaft). The adhesive surface must be free of grease.

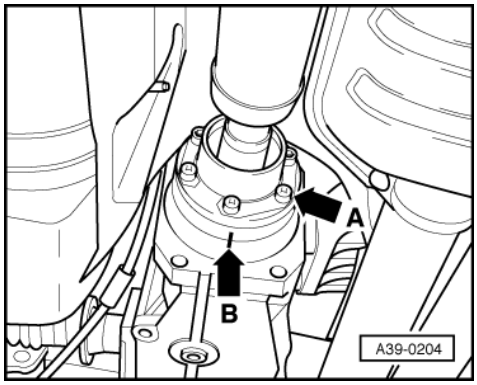

- -> To prevent imbalance, install flanges of propshaft and rear final drive in such a way that the coloured factory markings (or markings made on removal) are in a line -arrow B-.

- Install and align the exhaust system.

=> 6-cylinder Engine, Mechanical Components; Repair group 26

=> 8-cylinder Engine, Mechanical Components; Repair group 26

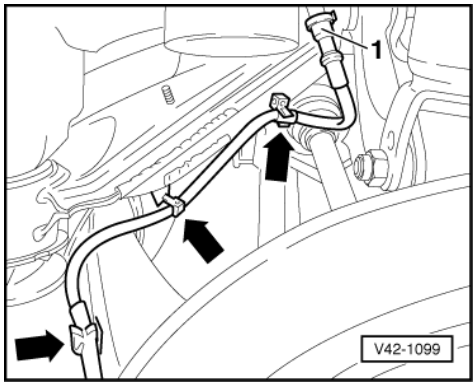

- -> Connect electrical connection for ABS speed sensor -1- at left and right.

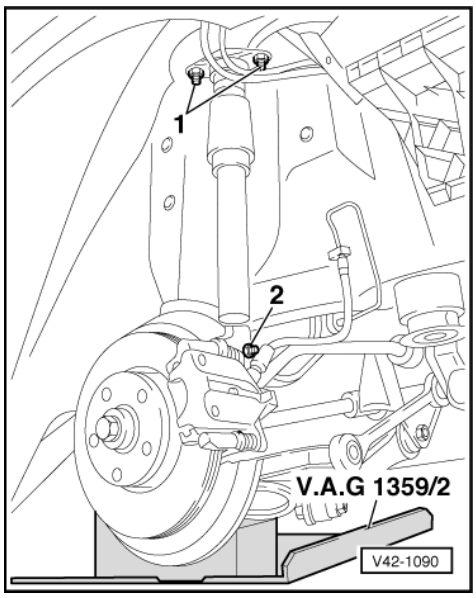

- -> For tightening the bolted connection -2- proceed as follows:
  Lift the trapezium link until the shock absorber is compressed by approx. 40 - 50 mm.

Tightening torque:

Item 2, Shock absorber to transverse link: 65 Nm

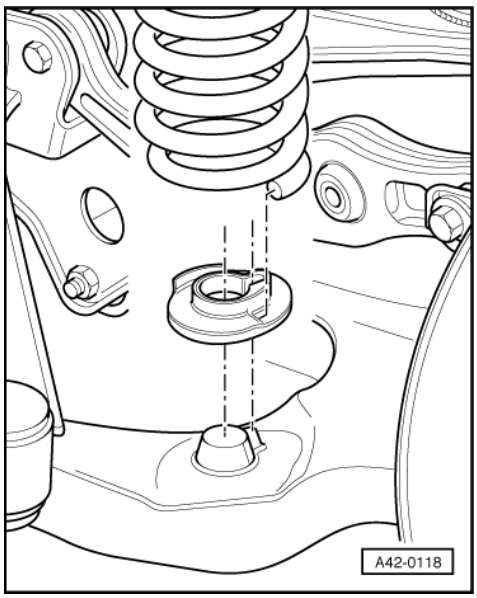

Installing coil spring:

- -> The lower spring pad has a groove in it.
- Insert this groove in lug on trapezium link.
- Rotate the spring end until it touches the stop on the lower spring pad.
- Then rotate the upper spring pad (not illustrated) up stop on the upper spring end.
- Release tension on the spring.

Only if the collared bolt has been loosened.

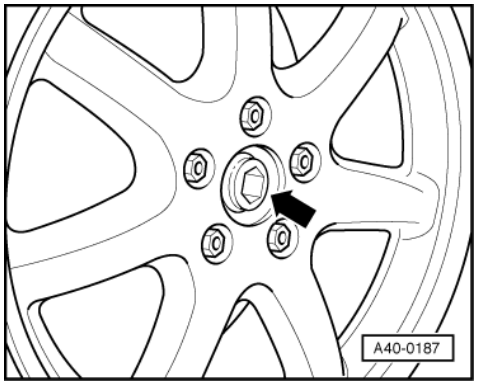

Always use a new collared bolt.

- -> Tighten the collared bolt to 190 Nm and then give it a further 180° turn

Important Vehicle must be standing on wheels when unscrewing and tightening the collared bolt -Risk of accident-

9.2 - Replacing subframe bushes

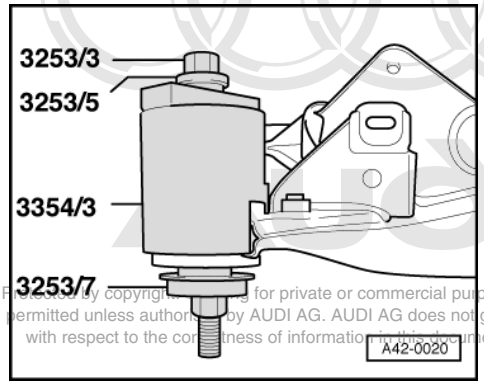

-> Fig.1 Pulling out bonded rubber bush

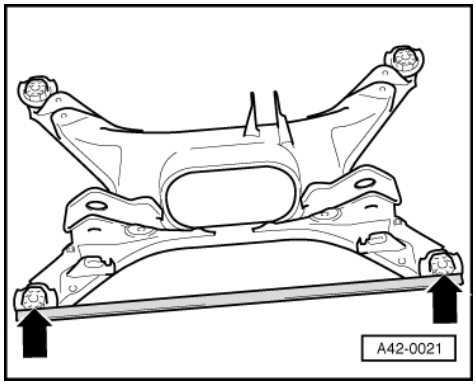

-> Fig.2 Aligning bonded rubber bushes

- Set the bonded rubber bushes in place so that flat side faces towards front (soft side in direction of travel).
- The bushes must be aligned using a long, straight square section tube or a straightedge -arrows-.

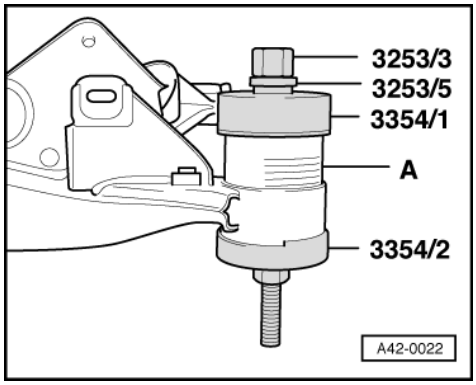

-> Fig.3 Pulling in bonded rubber bush

Note:

Coat bush with assembly lubricating oil G 294 421 A1. Never use grease or liquid soap.

10 - Removing and installing track rod

10.1 - Removing and installing track rod

Note:

Perform wheel alignment after completing repair => Page 212

Removing

- Remove wheel.

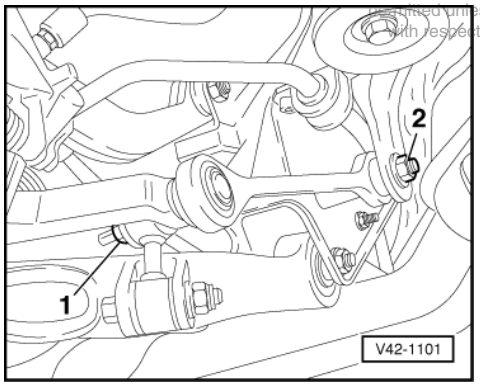

- -> Unscrew nut -1- and remove washer.
- Unscrew nut -2-, remove eccentric disc and eccentric bolt.

Note:

Do not turn eccentric bolt more than 90° to left or right (i.e. smallest to largest adjustment possible).

Upon installation, pay special attention to the following:

Note:

Replace bolts and self-locking nuts => Instructions in exploded views from Page 98 .

- The tapered seat in the wheel bearing housing and the track rod cone must be free of any grease.

Vehicles up to model year 96:

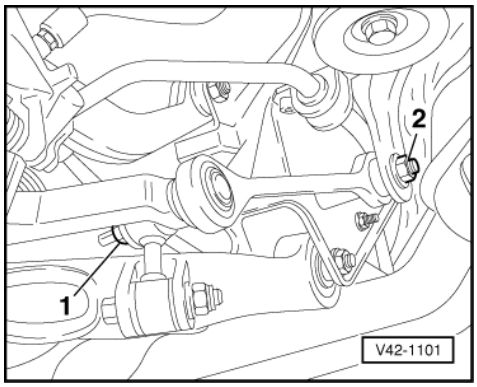

- -> Tighten nuts -1- and -2- only once the vehicle is standing on wheels.

Tightening torques:

Item 2: 95 Nm

Item 2: 70 Nm and turn further 90°

Vehicles from model year 97:

Note:

Mixed installation with an old track rod is not permissible.

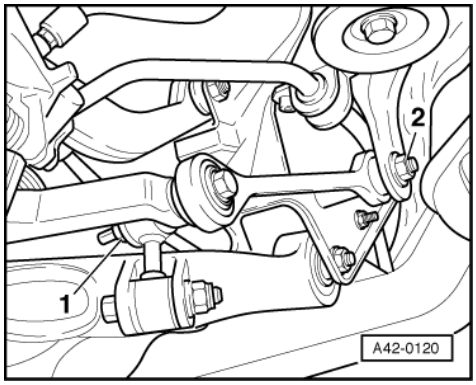

- -> Tighten nuts -1- and -2- only once the vehicle is standing on wheels.

Tightening torques:

Item 1: 70 Nm and turn further 90°
Item 2: 70 Nm and turn further 90°

11 - Removing and installing anti-roll bar

11.1 - Removing and installing anti-roll bar

Note:

Perform wheel alignment after completing repair => Page 212

Removing

- Remove wheels.
- Remove rear exhaust system section.

=> 6-cylinder Engine, Mechanical Components; Repair group 26

=> 8-cylinder Engine, Mechanical Components; Repair group 26

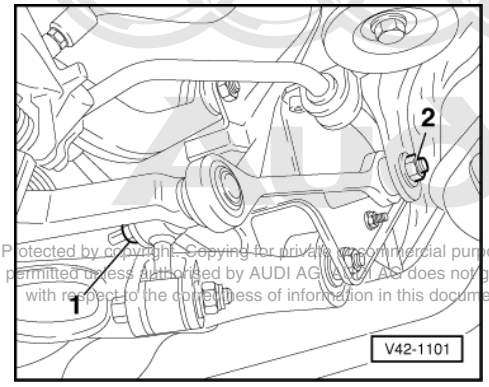

- -> Unscrew nut -2-, remove eccentric disc and eccentric bolt.

Note:

Do not turn eccentric bolt more than 90° to left or right (i.e. smallest to largest adjustment possible).

- Swivel the track rod downwards.

Vehicles from model year 97:

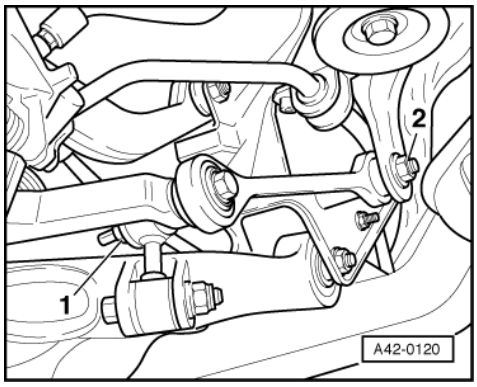

- -> Loosen the nut -1- and swivel the track rod downwards.

All models:

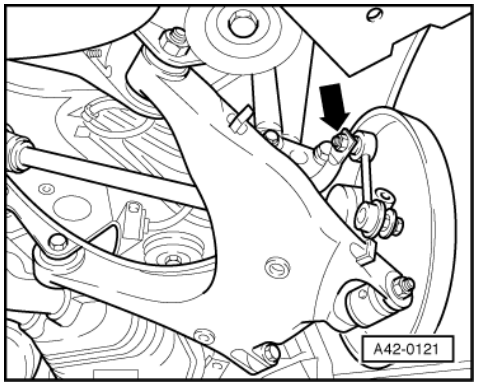

- -> Unscrew anti-roll bar from connecting links-arrow-.

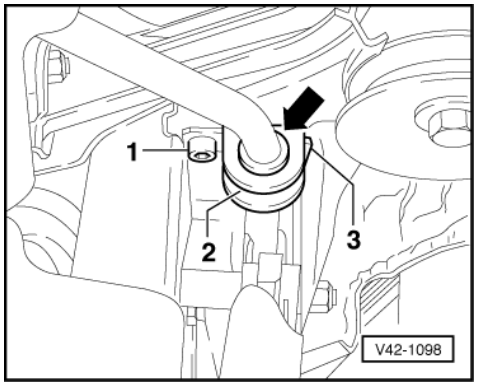

- -> Unscrew cheese-head bolt -1-.
- Remove clamp -2- from subframe aperture -3-.
- Remove bush and anti-roll bar.

Upon installation, pay special attention to the following:

Note:

Replace bolts and self-locking nuts => Instructions in exploded views from Page 98 .

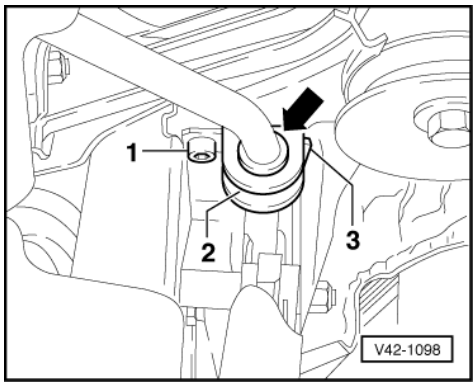

- -> The bonded rubber bush must make contact with the anti-roll bar collar -arrow-.
- Insert the clamp -2- into the subframe aperture -3-.
- Tighten cheese-head bolt -1- to 30 Nm only once the vehicle is standing on wheels.

Vehicles up to model year 96:

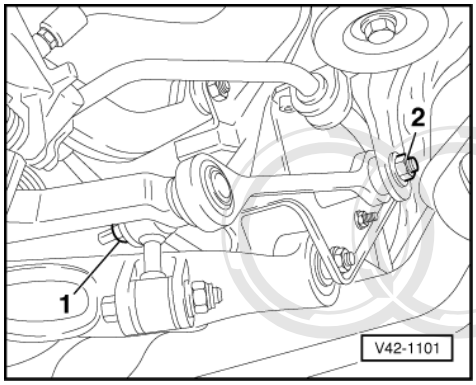

- -> Tighten nuts -1- and -2- only once the vehicle is standing on wheels.

Tightening torques:

Item 2: 95 Nm
Item 2: 70 Nm and turn further 90°

Vehicles from model year 97:

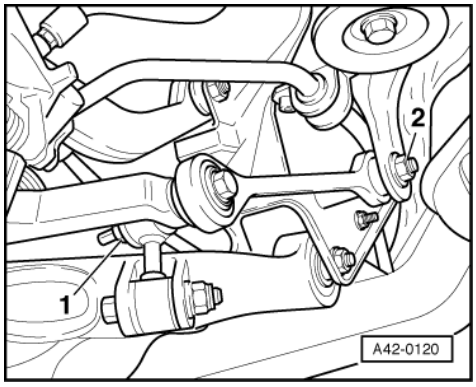

- -> Tighten nuts -1- and -2- only once the vehicle is standing on wheels.

Tightening torques:

Item 1: 70 Nm and turn further 90°
Item 2: 70 Nm and turn further 90°

11.2 - Replacing bush for anti-roll bar

Note:

Always replace bushes on both sides of the vehicle.

Removing

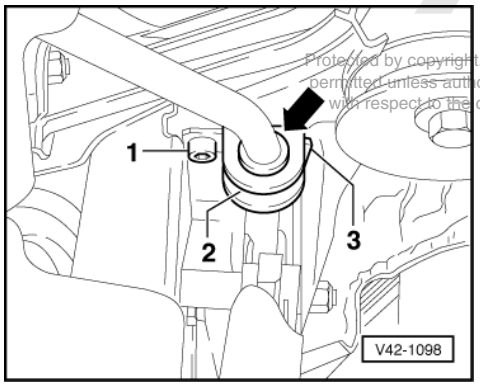

- -> Unscrew cheese-head bolt -1-.
- Remove clamp -2- from subframe aperture -3-.
- Remove bush.

When installing, pay special attention to the following:

- The bonded rubber bush must make contact with the anti-roll bar collar -arrow-.
- Insert the clamp -2- into the subframe aperture -3-.
- Tighten cheese-head bolt -1- to 30 Nm only once the vehicle is standing on wheels.

12 - Removing and installing drive shaft

12.1 - Removing and installing drive shaft

Notes:

- Perform wheel alignment after completing repair => Page 212

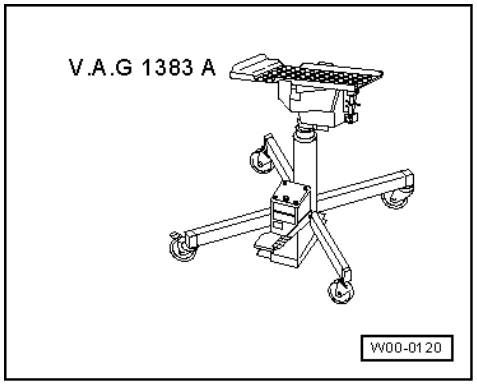

- For vehicles with headlight range control, refer to =>Page 114 .

Special tools and workshop equipment required
- V.A.G 1383 A with V.A.G 1359/2

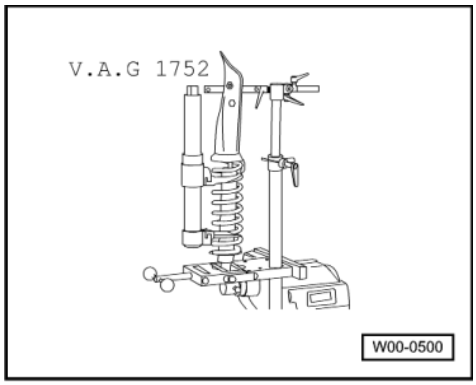

- V.A.G 1752

Removing
- Lever off hub cap from disc wheel or pull off using suction puller -3208-as necessary.

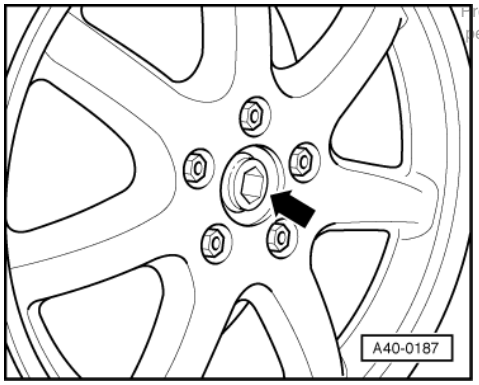

- -> Unscrew the collared bolt -arrow-.

Note =>Page 82

Important Vehicle must be standing on wheels when unscrewing and tightening the collared bolt -Risk of accident-

- Remove wheel.
- Plugged in ABS sensor: Pull out ABS speed sensor slightly from wheel bearing housing.
- Screwed in ABS sensor: Unscrew ABS speed sensor.
- Secure brake disc with a wheel bolt.

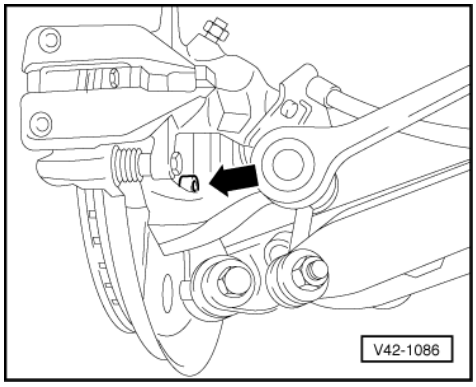

- -> Unscrew the brake caliper bolts (second bolt not visible)

Notes:
- Fasten brake caliper to body using wire.
- Do not suspend the brake caliper from the brake hose.

- Remove brake disc.

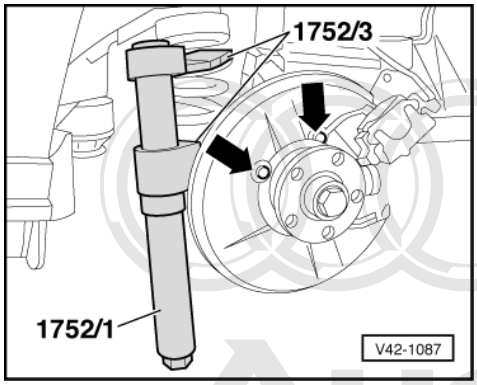

- -> Unscrew the cover plate -arrows-(third bolt not visible)
- Apply spring compressor -V.A.G 1752/1- with spring attachments -V.A.G 1752/3- into the coil spring.

Important
Ensure that coil spring is correctly located in spring attachment -VAG 1752/3- - accident risk.

- Tension the coil spring until it can be removed.

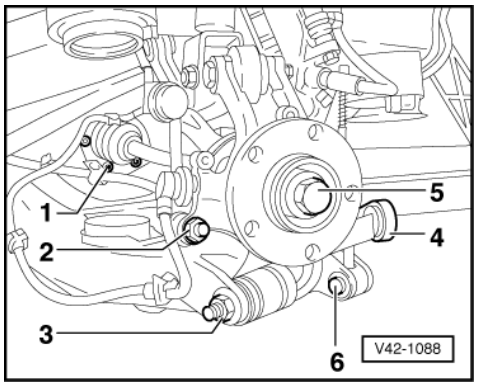

- -> Unscrew drive shaft from flanged shaft/gearbox -1-.
- Unscrew connecting link -2- and press out of wheel bearing housing.
- Remove bolts -3- and -6-.
- Unscrew track rod -4- and pull out of wheel bearing housing.
- Unscrew collared bolt -5-.

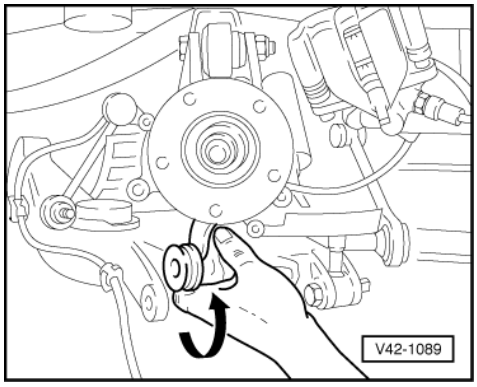

- -> Pull wheel bearing housing in direction of arrow.
- Remove drive shaft.

When installing, pay special attention to the following:

Note:

Replace bolts and self-locking nuts => Instructions in exploded views from Page 98 .

- Check that seal on drive shaft inner joint is bonded in place.
- Bolt drive shaft to flange shaft/gearbox and tighten to 77 Nm.
- Plugged in ABS sensor: Press ABS wheel speed sensor into wheel bearing housing up to stop.
- Screwed in ABS sensor: Tighten the ABS speed sensor to 10 Nm.

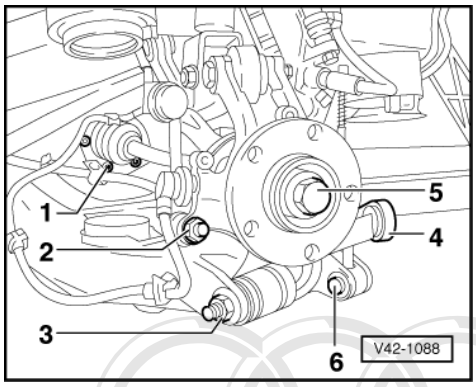

- -> For tightening the bolted connections -3, 4, and 6- proceed as follows:
  Lift the trapezium link until the shock absorber is compressed by approx. 40 - 50 mm.
  (e.g. using gearbox jack V.A.G 1383-A with plate V.A.G 1359/2).

Tightening torques:

Items 3 and 6: 80 Nm and turn further 90°
Item 4 up to model year 96: 95 Nm
Item 4 from model year 97: 70 Nm and turn further 90°

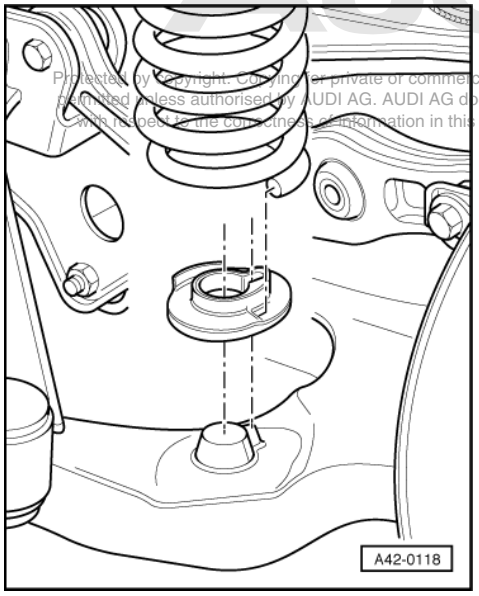

Installing coil spring:

- -> The lower spring pad has a groove in it.
- Insert this groove in lug on trapezium link.
- Rotate the spring end until it touches the stop on the lower spring pad.
- Then rotate the upper spring pad (not illustrated) up stop on the upper spring end.

- Release tension on the spring.

- Bolt the brake caliper to the wheel bearing housing.

=> Brake System; Repair group 46; Servicing front wheel brake Servicing front wheel brake

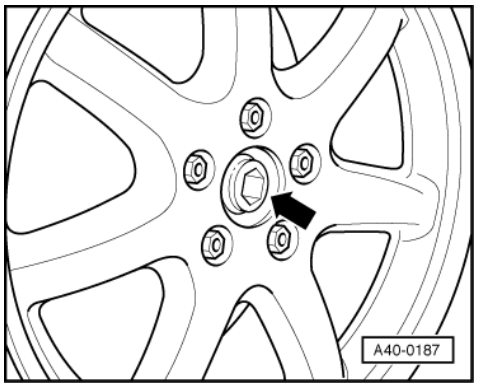

- -> Tighten the collared bolt to 190 Nm and then give it a further 180° turn

Note =>Page 83

Important Vehicle must be standing on wheels when unscrewing and tightening the collared bolt -Risk of accident-

12.2 - Servicing drive shaft

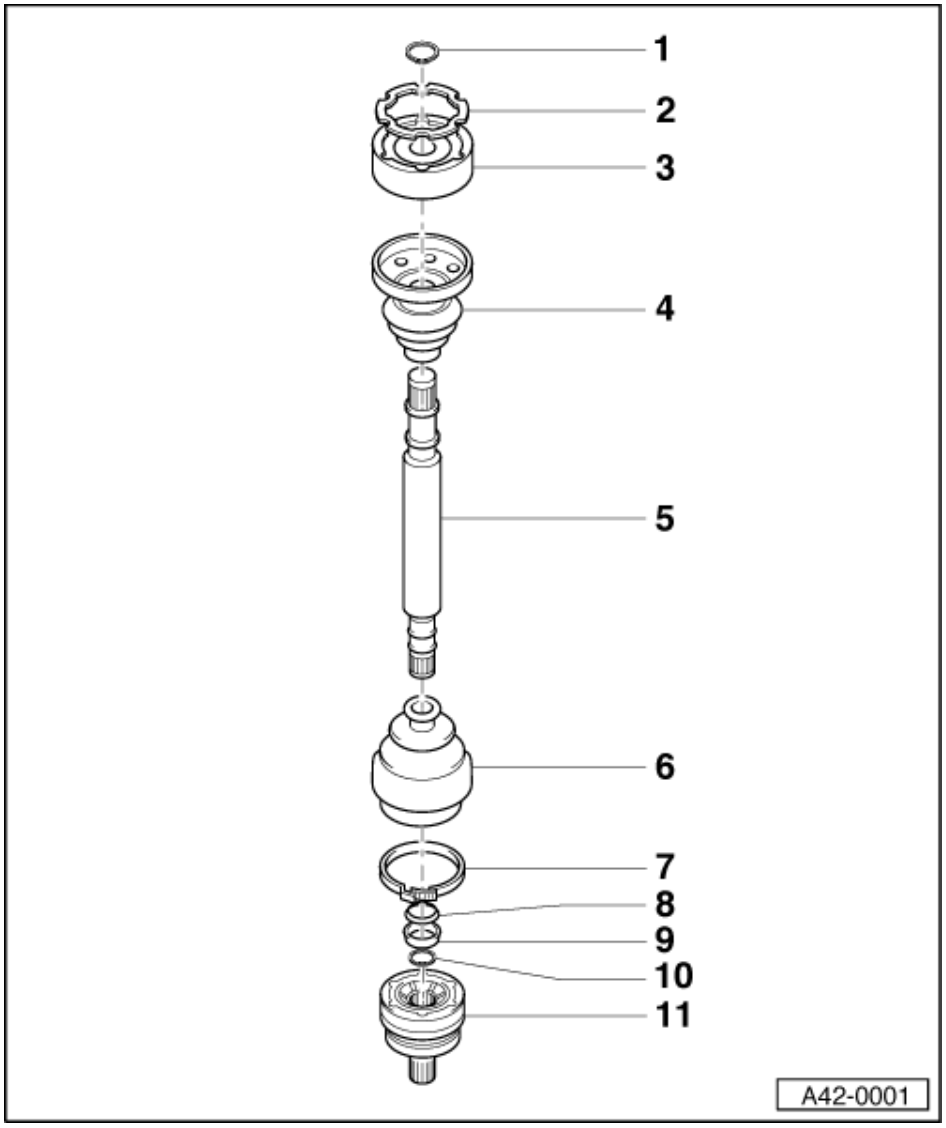

Note:

- The joints are greased using high-temperature grease G 000 633

Outside	Quantity of grease	of which in:	
Joint ø	Total	Joint	Boot
[mm]	[g]	[g]	[g]
98	120	80	40
Inner side			
Joint ø			
108	120	35	85

Regrease joint as necessary when replacing the boot.

1 Circlip

- Remove and install using commercially available circlip pliers

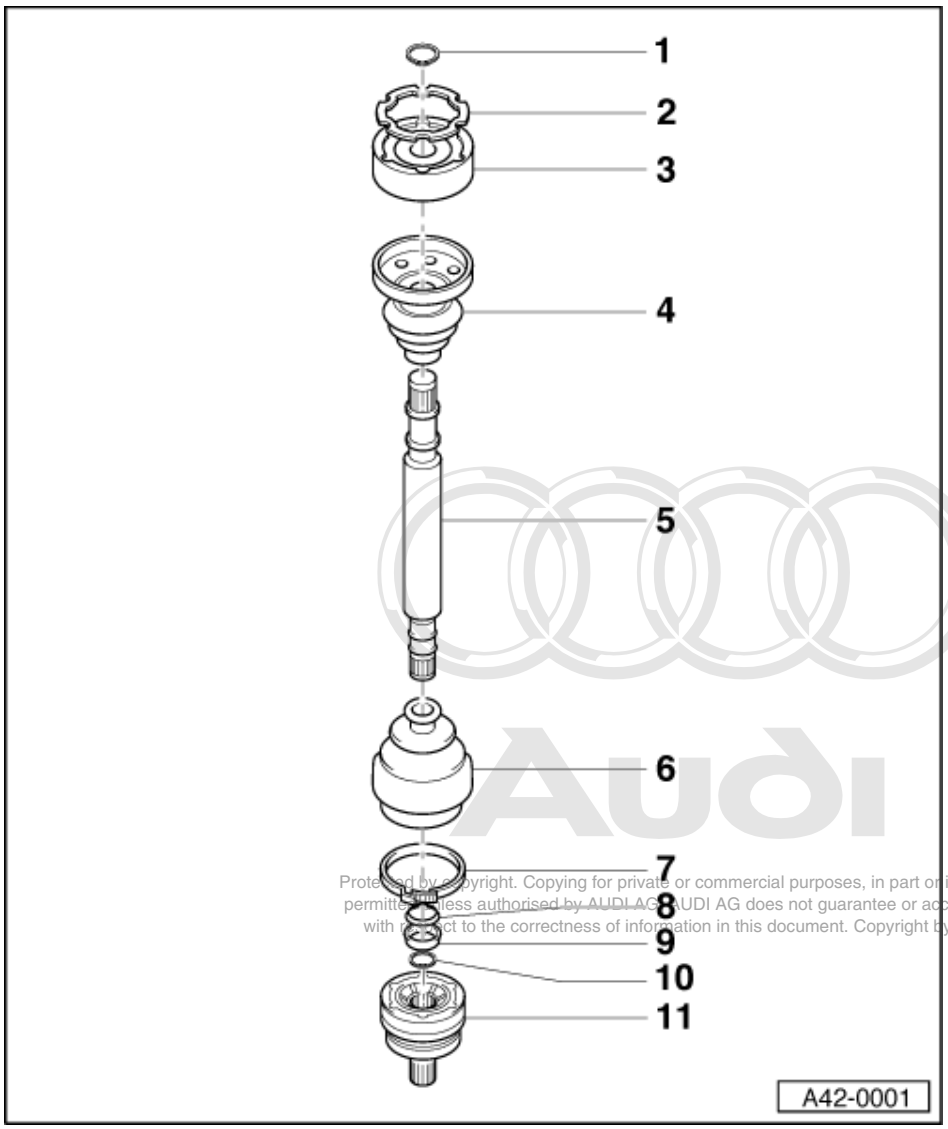

2 Gasket
- Replace; pull off protective sheet and bond self-adhesive side of seal into joint

3 Inner constant velocity joint
- Outer diameter: 108 mm
- Replace only as complete unit
- Pressing off => Fig. 1
- Pressing on => Fig. 2
- Greasing => Page 165

4 Boot for inner constant velocity joint
- With vent hole
- Check for cracks and abrasion
- Drive off with drift
- Before attaching to the constant velocity joint coat sealing surface using housing sealer D 454 300 A2

=> Parts Catalogue

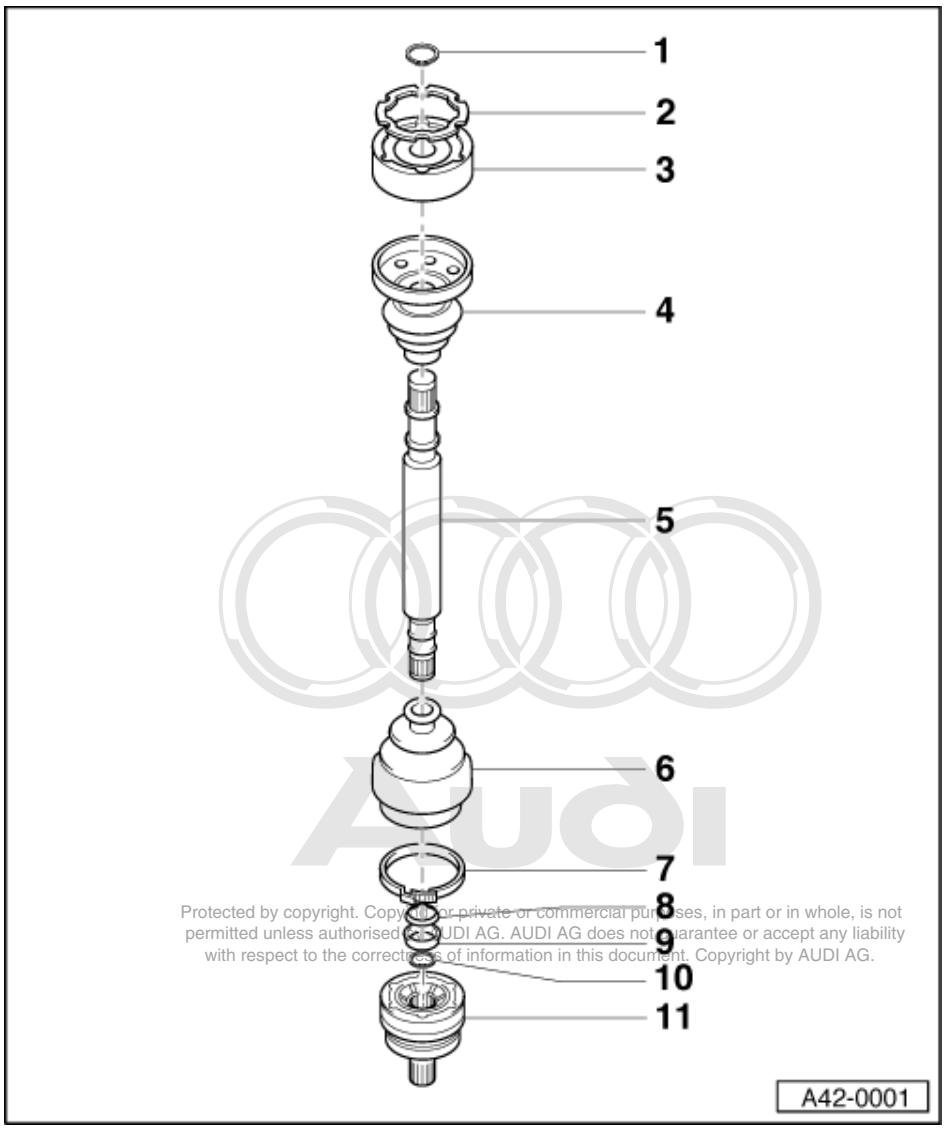

5 Profiled shaft
- Same length on left and right

6 Boot
- Check for cracks and abrasion

7 Clip
- Always replace
- Tensioning => Fig. 3

8 Dished washer
- Installation position => Fig. 5 .

9 Spacer (plastic)
- Installation position => Fig. 5 .

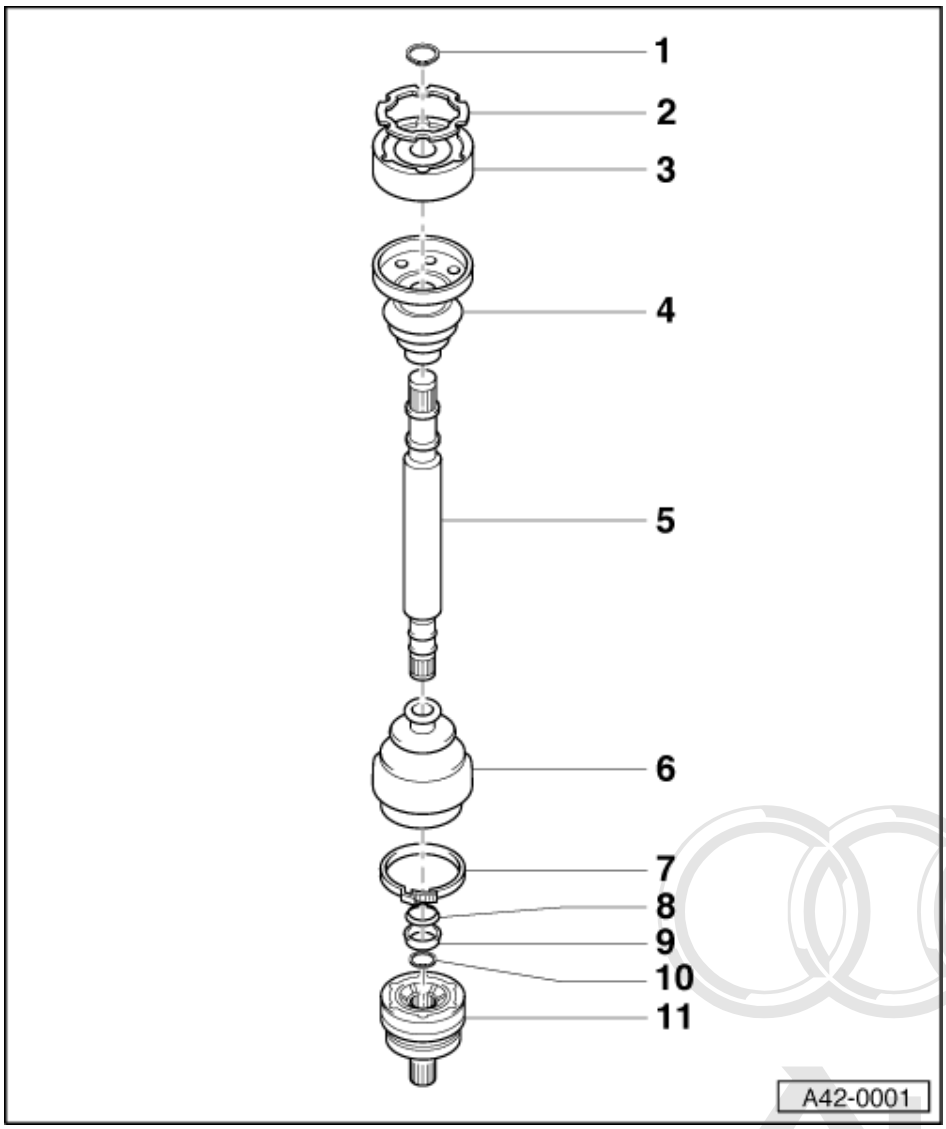

10 Circlip

- Always replace
- Insert in shaft groove

11 Outer constant velocity joint

- Outer diameter: 98 mm
- Replace only as complete unit
- Removing => Fig. 4
- Installing:
- Drive joint onto shaft with plastic hammer until circlip engages
- Greasing => Page 165

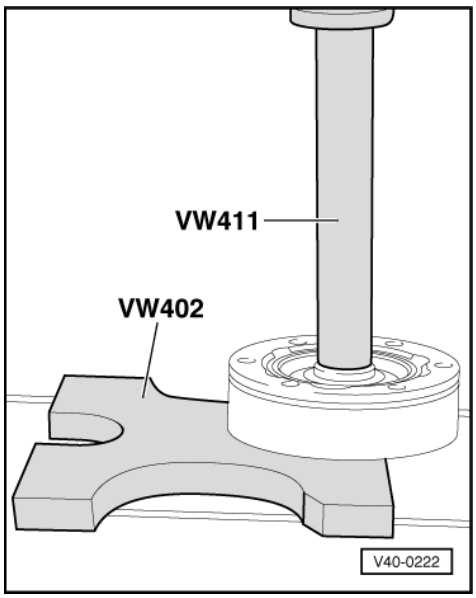

-> Fig.1 Pressing off inner constant velocity joint

- Unfasten circlip.
- Drive off boot using a drift.

Note:

Support the ball hub using plate -VW 402-.

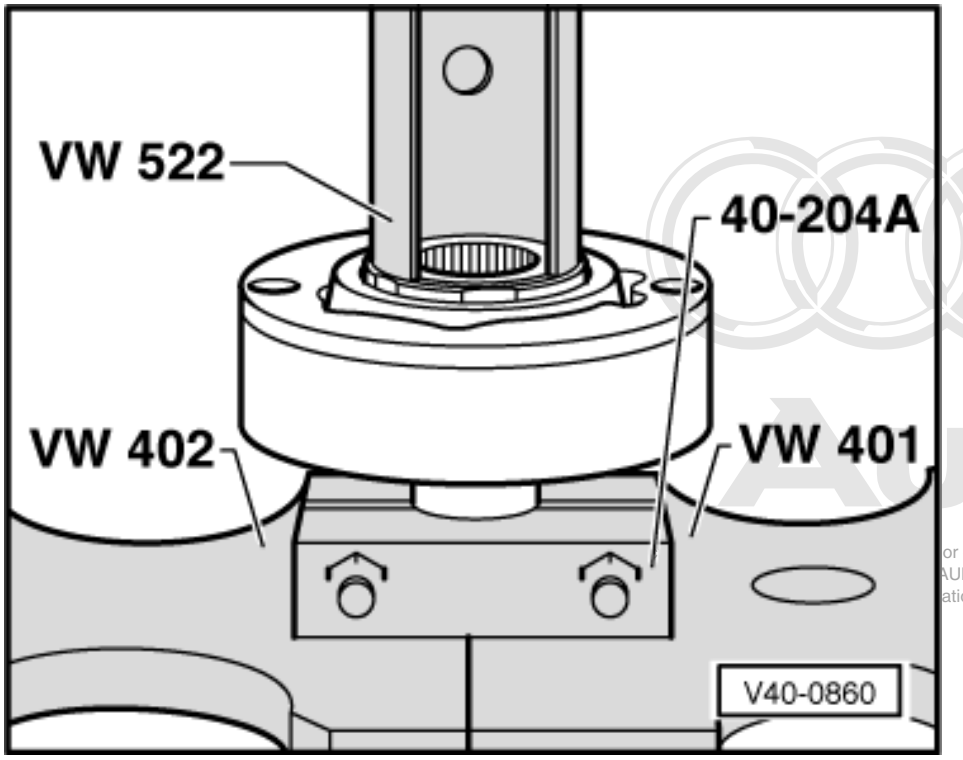

-> Fig.2 Pressing on inner constant velocity joint

- Press on joint up to stop.

- Fit circlip.

Note:

Chamfer on internal diameter of ball hub (splines) must face locating collar of drive shaft.

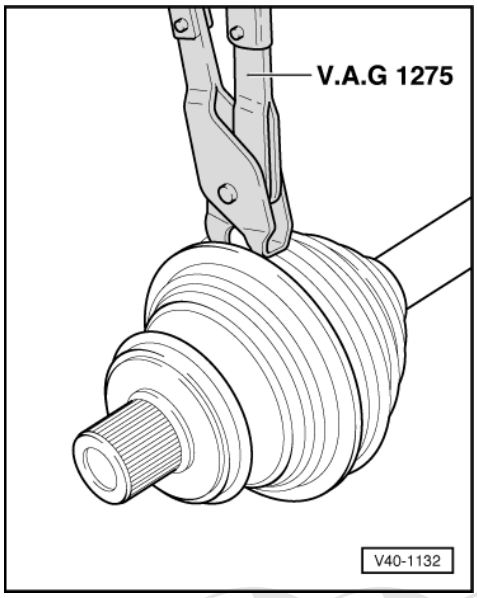

-> Fig.3 Tensioning clamp

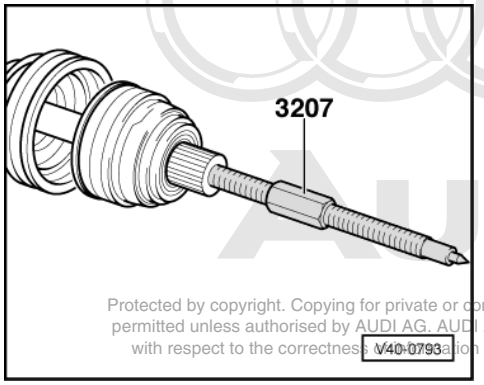

-> Fig.4 Pressing off outer constant velocity joint

- Clamp drive shaft in vice using soft jaws.
- Remove the large clamp and fold back boot.
- Screw special tool 3207 into end of joint until constant velocity joint can be removed.

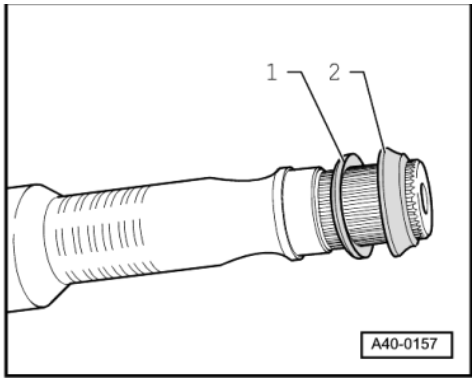

Fig.5 -> Installation position of spacer ring and dished washer (wheel side)

1 - Dished washer
2 - Spacer ring (plastic)

43 - Self levelling suspension

1 - Contact corrosion

1.1 - Contact corrosion

Contact corrosion can occur if non-approved fasteners are used (bolts, nuts, washers etc.).

For this reason, only fastening components which have been subjected to special surface treatment (Dachromet) are used in installation. These components can be identified by their greenish surface finish.

In addition, all rubber and plastic parts and all adhesives are made of non-electrically conductive materials.

If you are not sure of the reusability of parts, always fit new parts.

Please note the following:

Always use genuine service replacement parts.

These have been tested and are compatible with aluminium.

Accessories must be approved by AUDI AG.

Damage resulting from contact corrosion is not covered by the warranty.

2 - Servicing self-levelling suspension - (V6-petrol engine)

2.1 - Servicing self-levelling suspension - (V6-petrol engine)

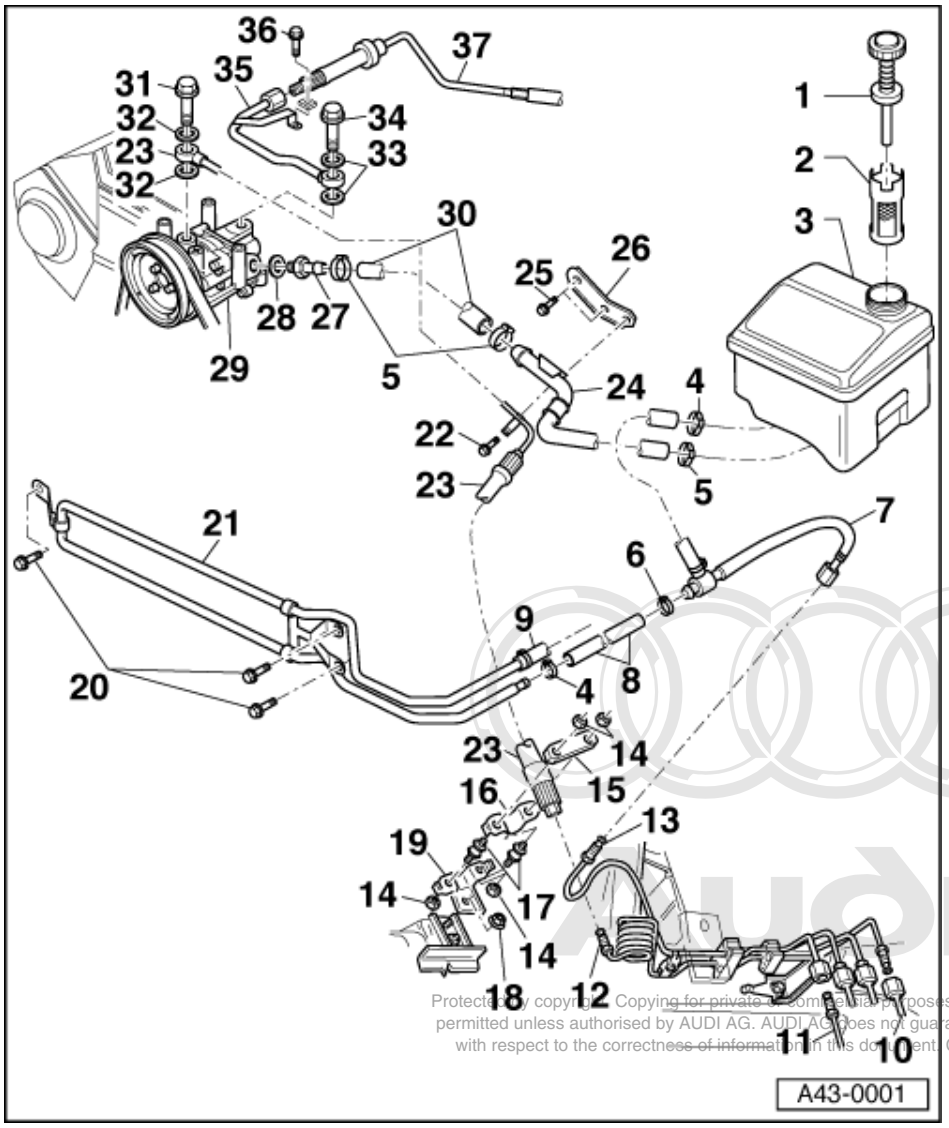

The system is bled automatically whilst driving.

The self-levelling suspension is adjusted by way of an adjustable-length connecting link between the level control valve and a lever attached to the anti-roll bar of the rear axle => Page 195

Counterhold the corresponding components when tightening pipe unions

When fluid circuit has been opened always:

- Check all unions for leaks, start engine and perform visual inspections.
- Check hydraulic fluid level with vehicle unladen=> Page 316 , top up fluid if necessary.

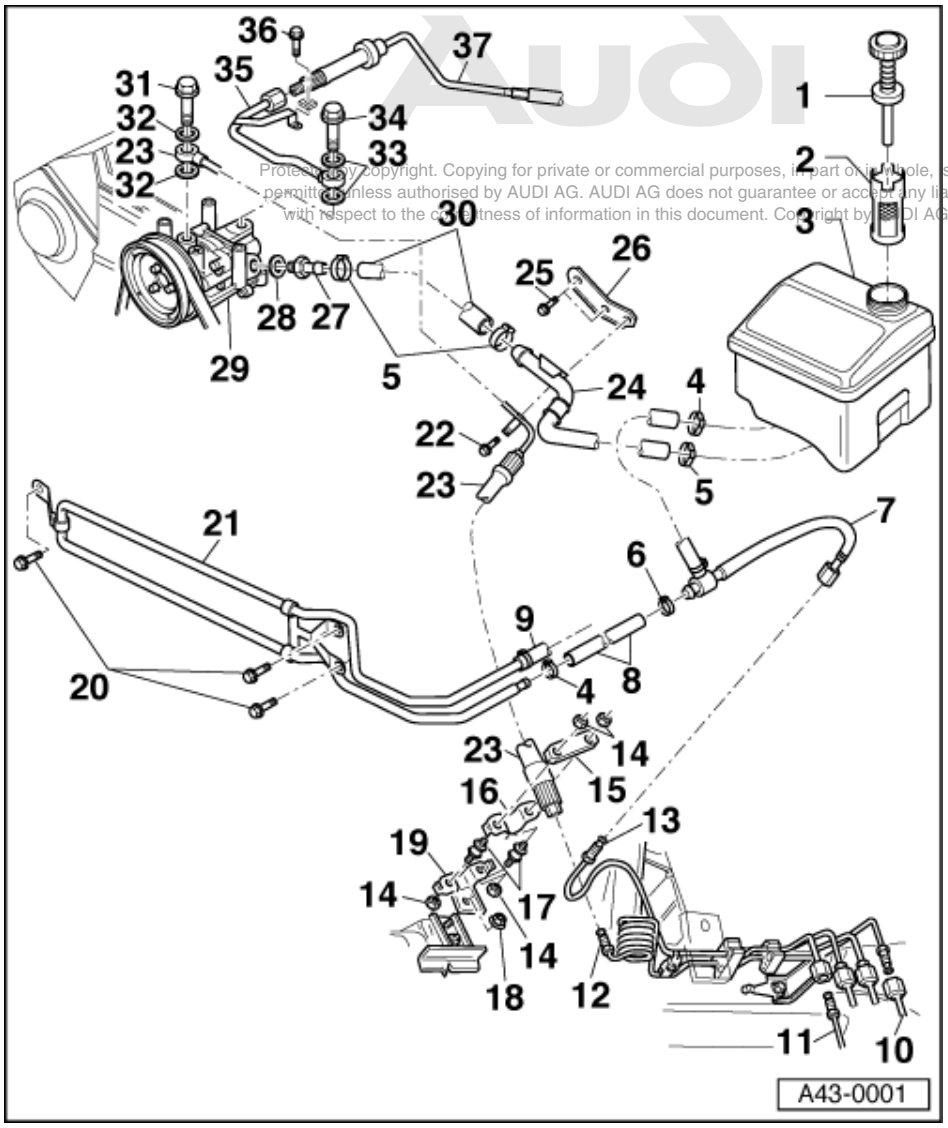

Note:

Items - 1- to -21- apply to 6- and 8-cylinder-engines.

1 Filler cap with dipstick.
2 Strainer for expansion tank
- Clean using solvent

3 Expansion tank
- Refilling with hydraulic fluid, Part No. G 002 000, filling quantity 3 litres
- Plugged into hydraulic unit bracket
- Checking hydraulic fluid level on unladen vehicle =>Page 316

4 Clip
- Always replace
- Tensioning => Page 48-113

- Can also be replaced by screw-type hose clamp

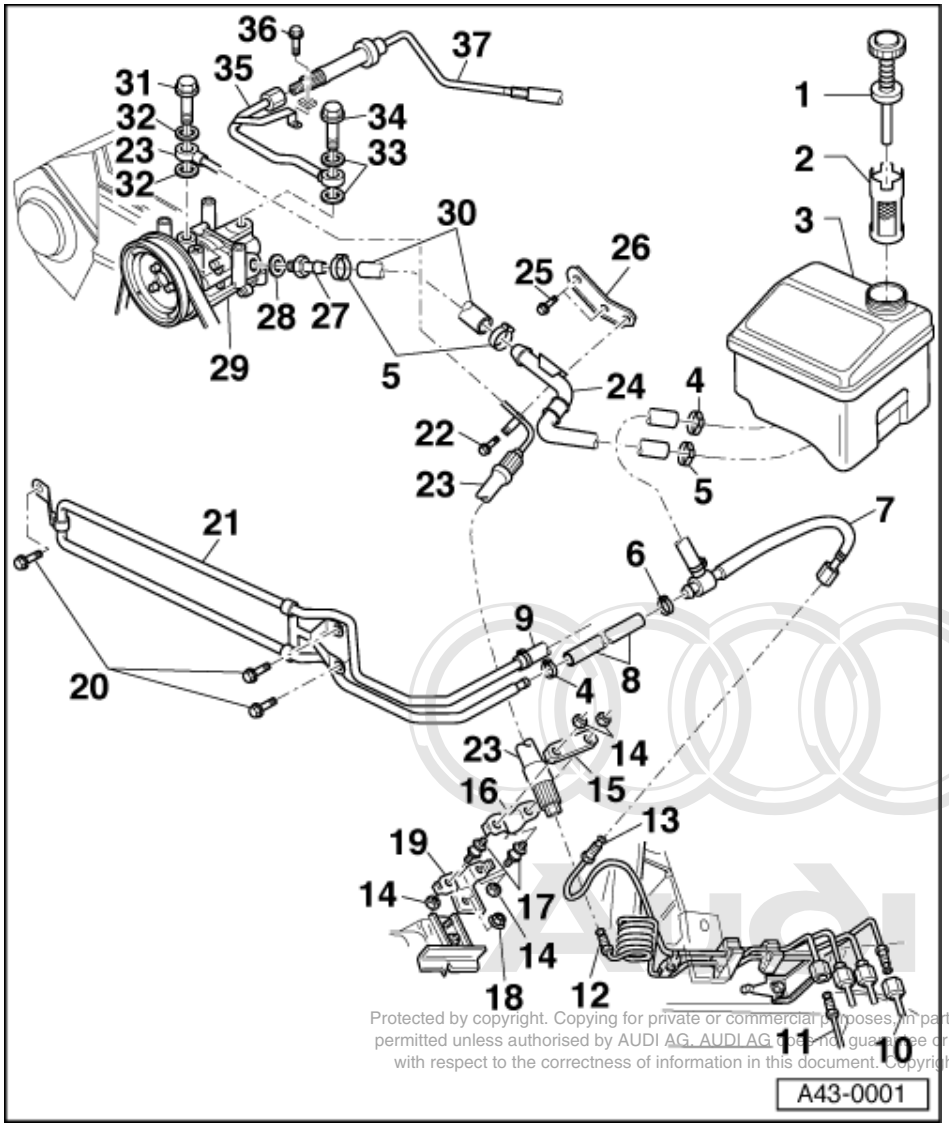

5 Clip
- Always replace
- Tensioning => Page 48-113
- Can also be replaced by screw-type hose clamp

6 Clip
- Always replace
- Tensioning => Page 48-113
- Can also be replaced by screw-type hose clamp

7 Return line
- Screwed into Item 13: 10 Nm

8 Return line
- Fluid cooler - distribution piece

9 Return line
- Steering box - fluid cooler

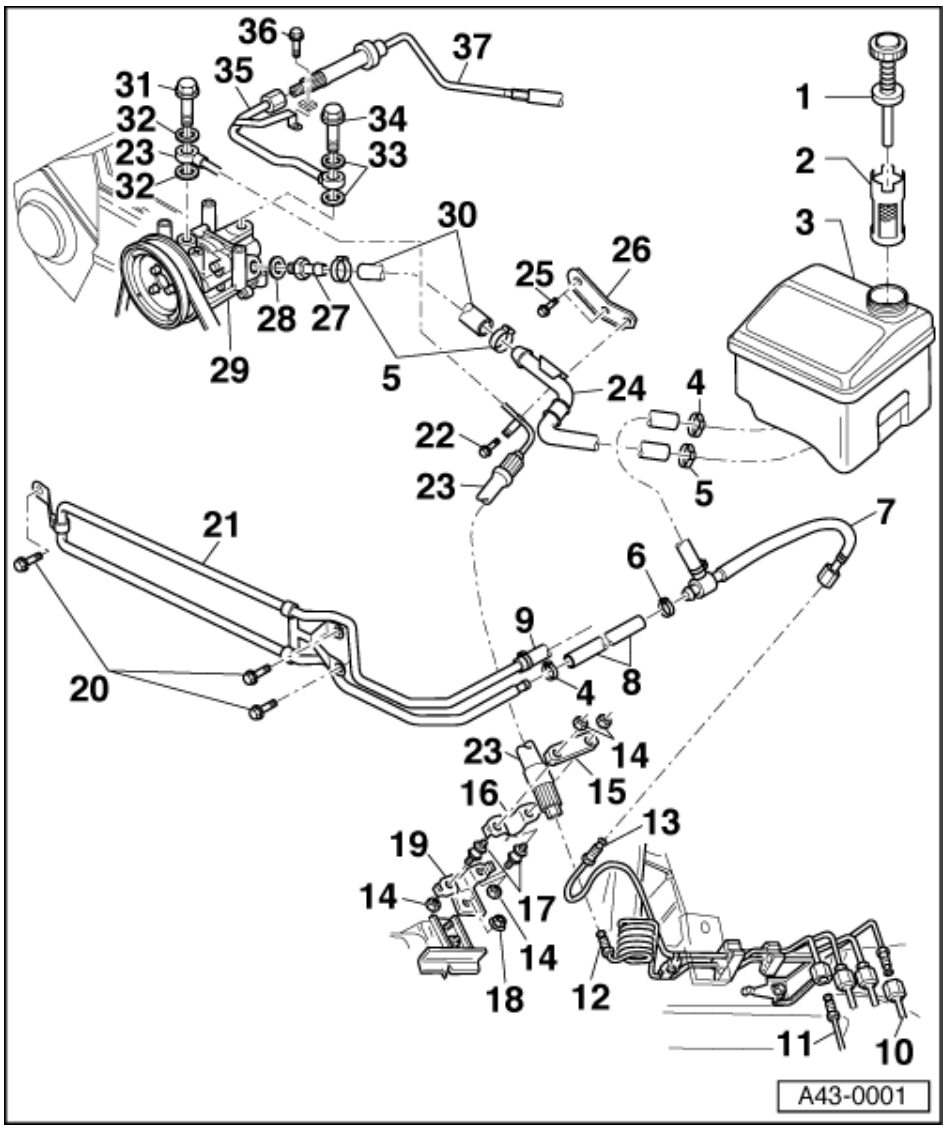

10 Pressure line 15 Nm
11 Return line, 15 Nm
12 Pressure line 15 Nm
13 Return line, 15 Nm
14 Hexagon nut, 10 Nm
15 Retaining washer
16 Clamp
17 Bonded rubber bush
18 Combi nut, 25 Nm
19 Bracket
20 Combi bolt, 8 Nm
21 Fluid cooler

- Bolted to radiator
- Two versions with varying routing of lines

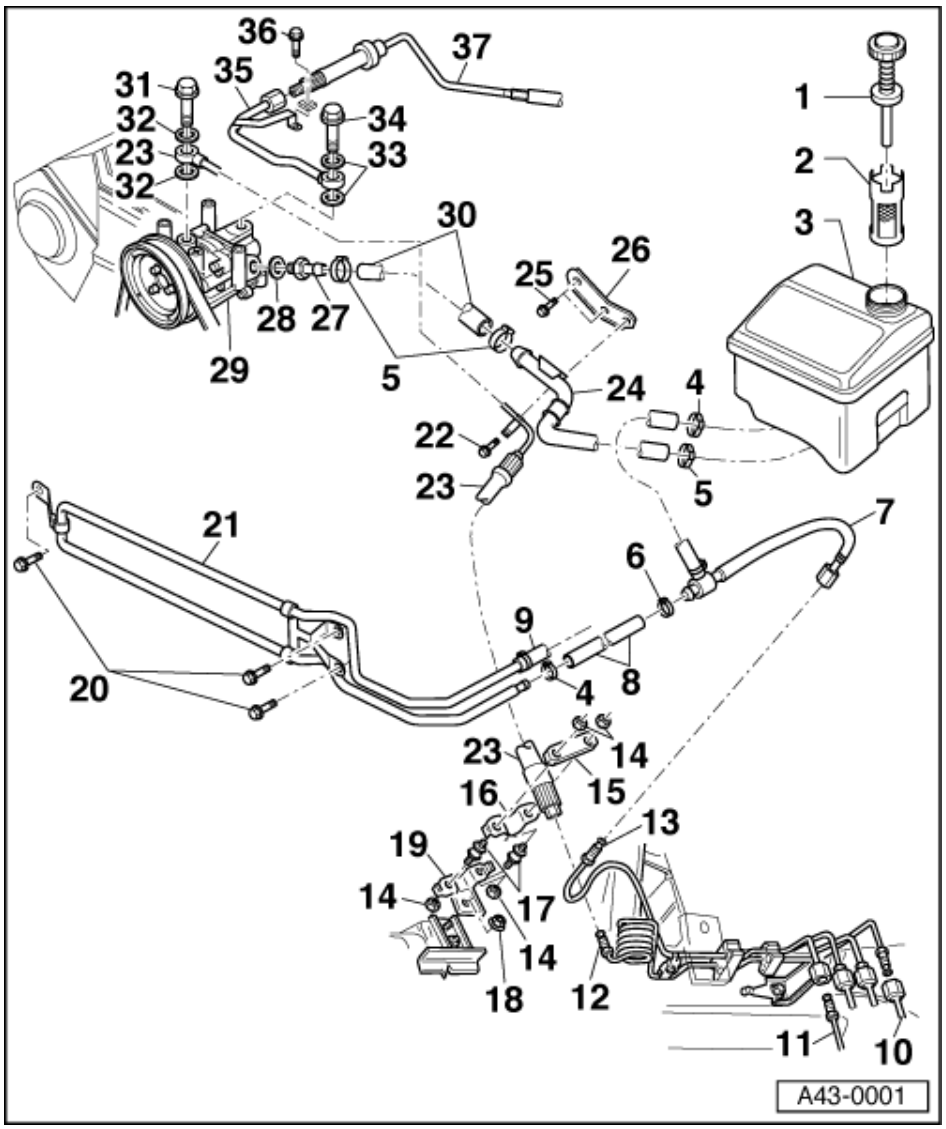

Note:

Items -22- to -37- only apply to 6-cylinder engines.

22 Combi bolt, 8 Nm
23 Expansion hose
- Plunger pump - pressure line
- Installation instructions => Fig. 1

24 Suction hose
- Section piece with pipe

25 Combi bolt, 10 Nm
26 Bracket
- Screwed to cylinder head

27 Screw fitting, 50 Nm
28 Sealing ring
- Always replace

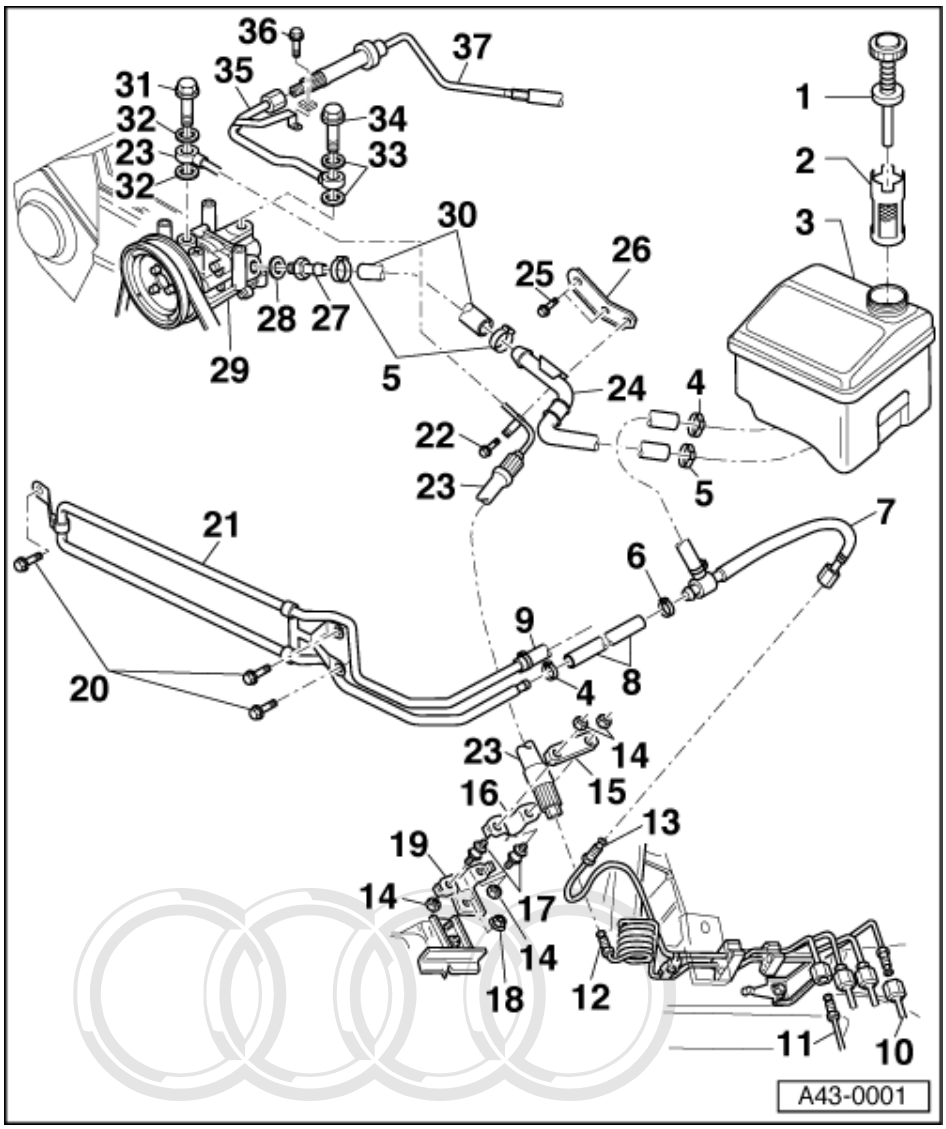

29 Tandem pump, 6-cyl. engine

- Tandem pump consists of plunger and vane pump. The plunger pump is assigned to self-levelling suspension, the vane pump to power-assisted steering
- Checking delivery rate of plunger pump => Page 191
- Removing and installing
  =>Page 327

30 Suction hose

- Section piece

31 Banjo bolt, 25 Nm

32 Sealing ring

- Always replace

33 Sealing ring

- Always replace

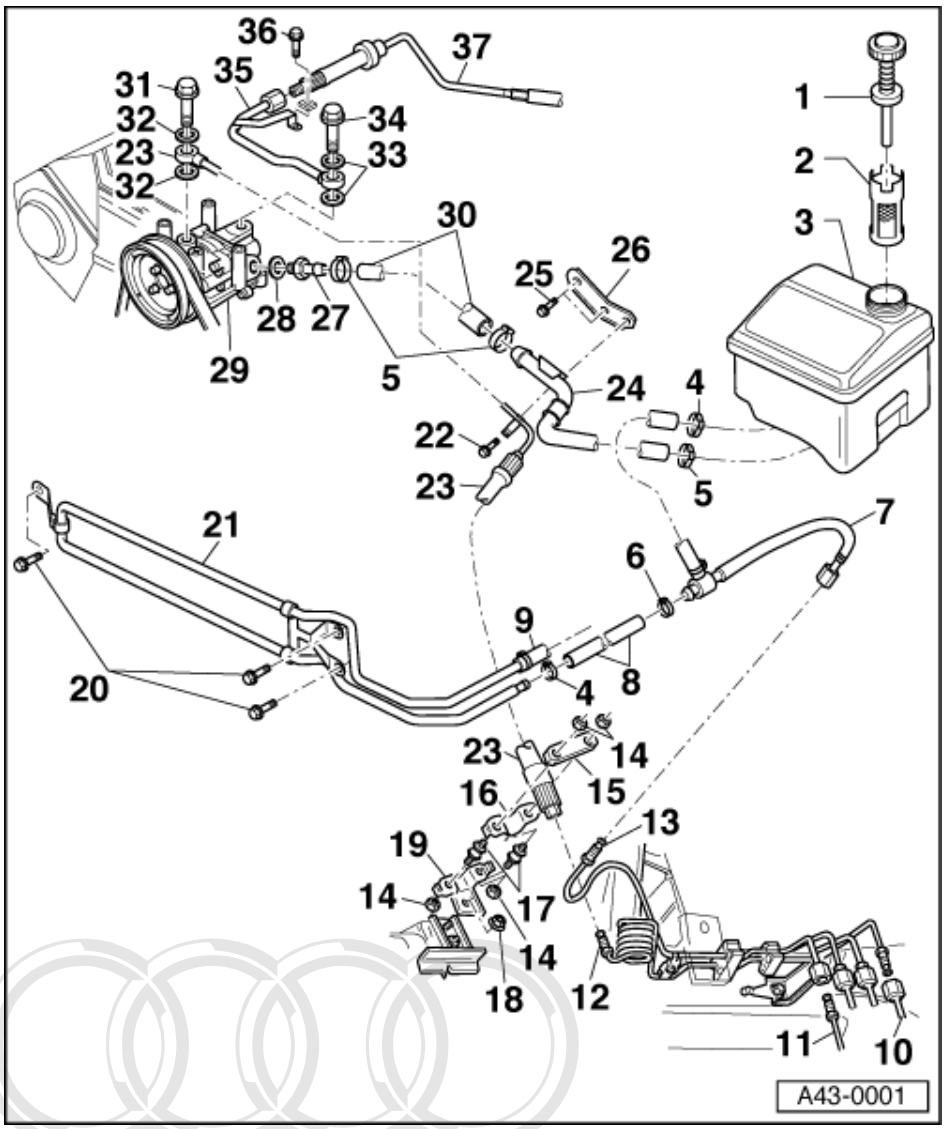

34 Banjo bolt, 50 Nm

35 Pipe, 40 Nm

- Screw to expansion hose; counterhold on hexagon of expansion hose.
- Screwed to suction pipe with combi bolt -Item 36 -

36 Combi bolt, 8 Nm

37 Expansion hose

- Section with pipe, runs to steering box

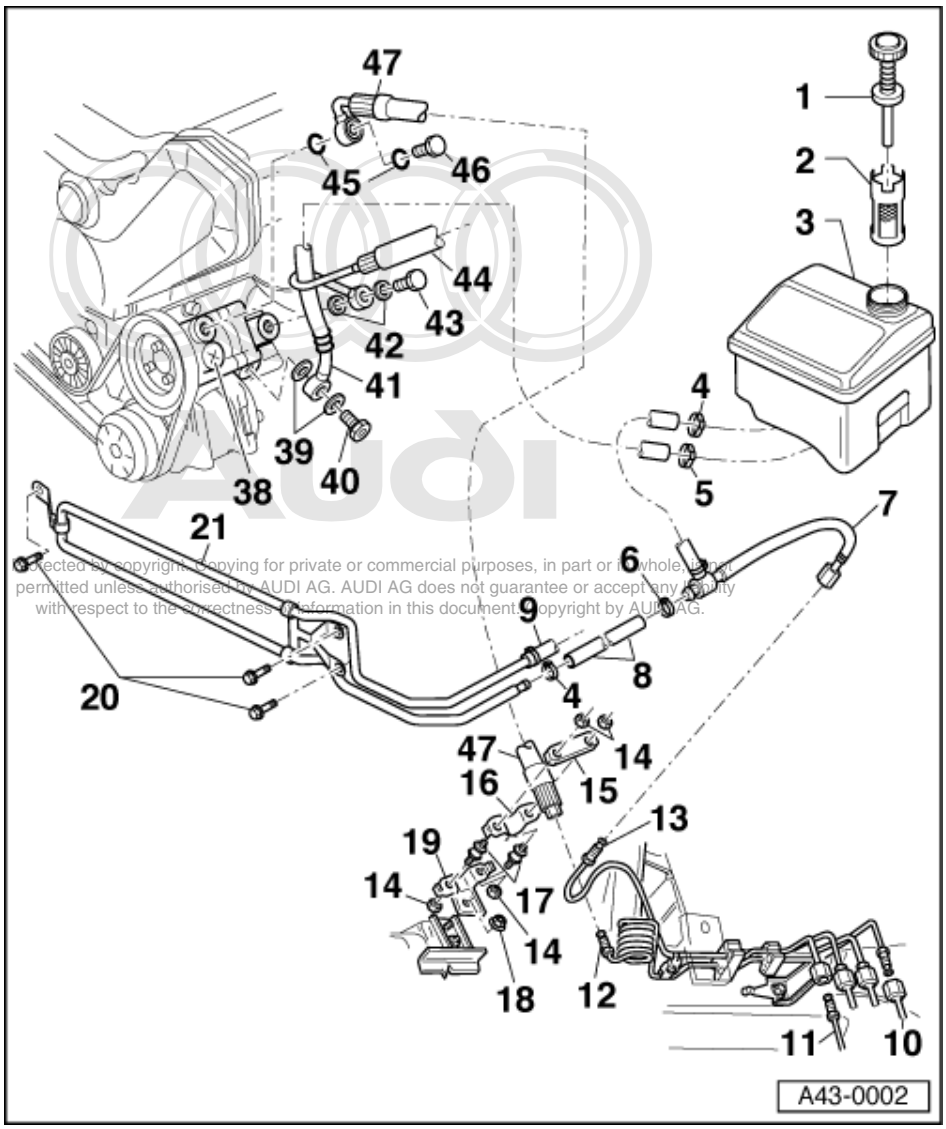

Note:

Items -38- to -47- only apply to 8-cylinder engines.

38 Tandem pump, 8-cyl. engine

- Tandem pump consists of plunger and vane pump. The plunger pump is assigned to self-levelling suspension, the vane pump to power-assisted steering
- Checking delivery rate of plunger pump => Page 193
- Removing and installing
  =>Page 378 .

39 Sealing ring

- Always replace

40 Banjo bolt, 50 Nm

41 Suction hose

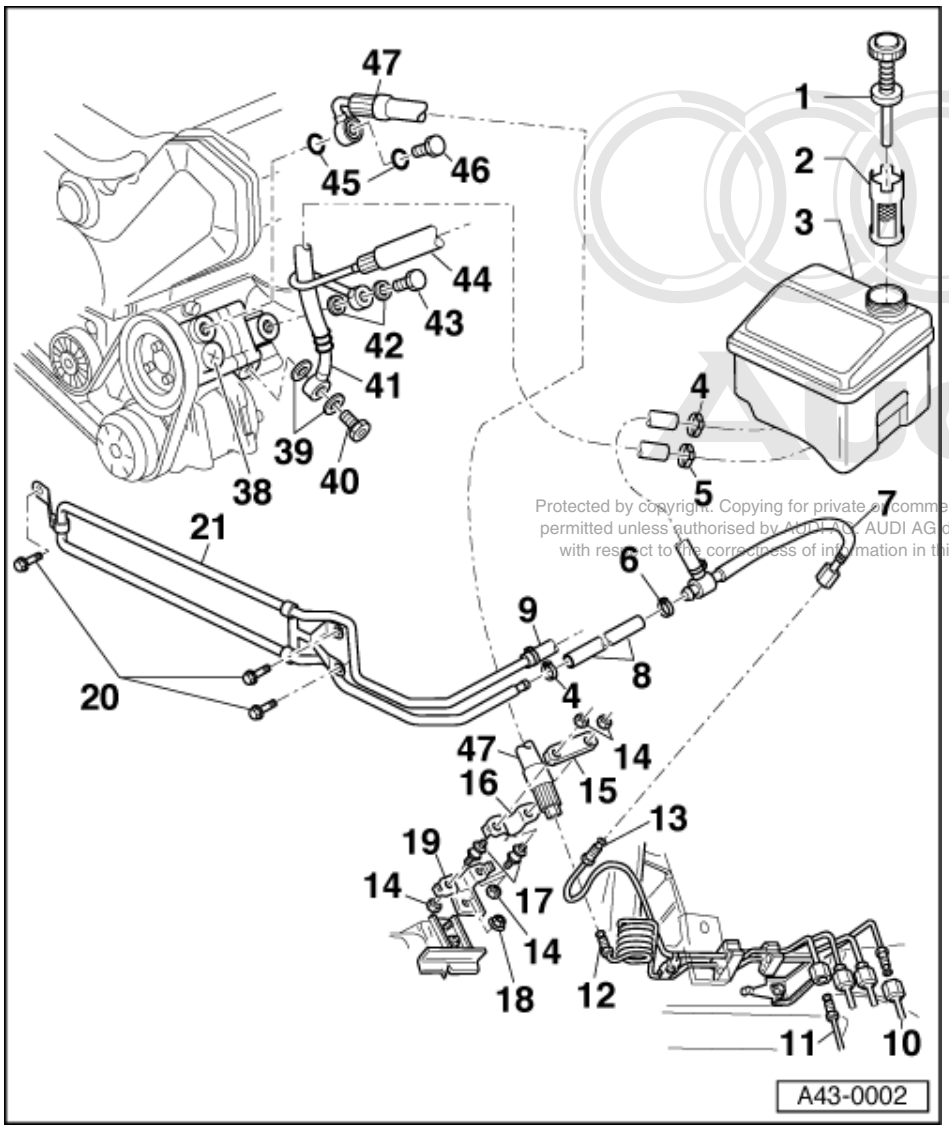

42 Sealing ring
- Always replace

43 Banjo bolt, 50 Nm

44 Expansion hose
- Leads to steering box

45 Sealing ring
- Always replace

46 Banjo bolt, 25 Nm

47 Expansion hose
- Plunger pump - pressure line
- Installation instructions => Fig. 2

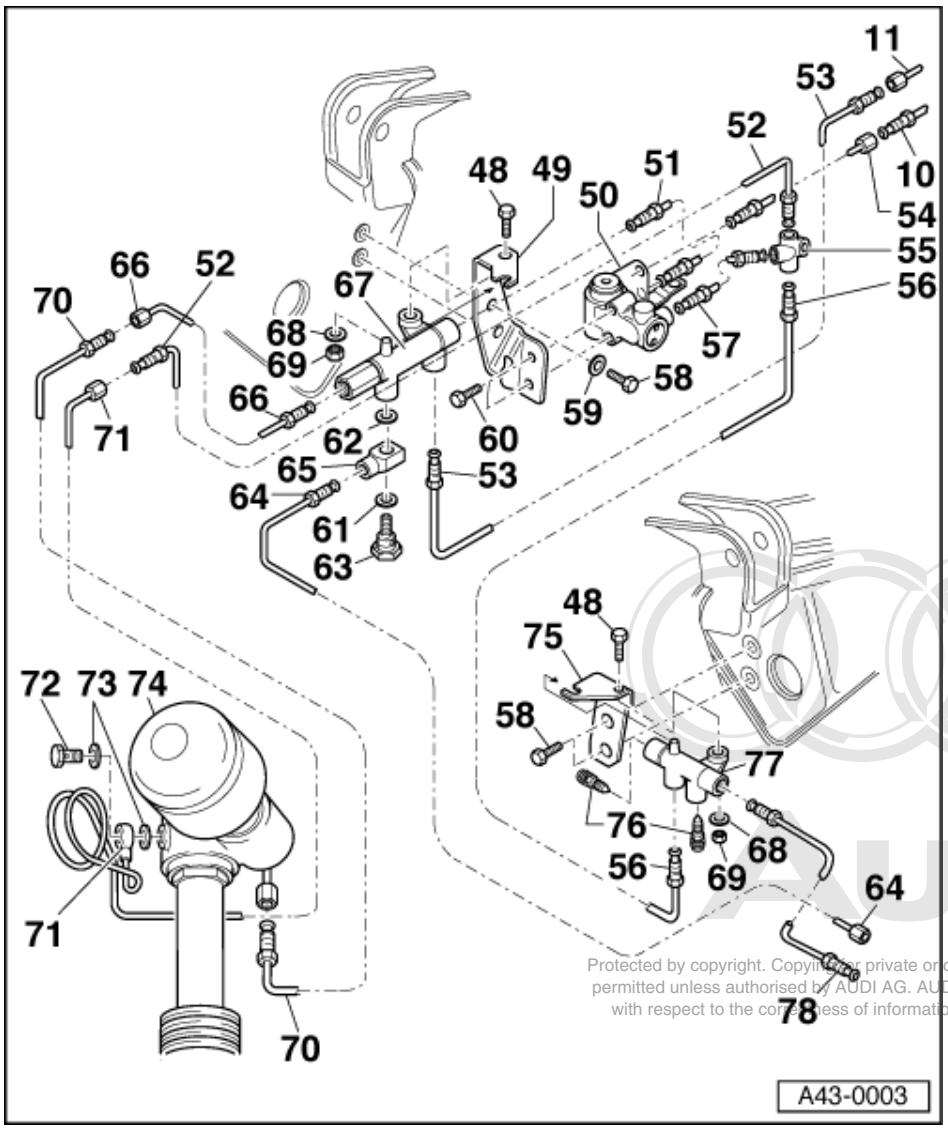

48 Hexagon bolt

49 Bracket

- As a result of design improvement a modified bracket is being used
- This bracket is also bolted to the trapezium link mounting
- This is done using one combi bolt M12x1.5x95, washer and self-locking nut
- Tightening torque is: 70 Nm + 90° further turn

50 Level control valve

- Functional test => Page 194
- Checking for leaks =>Page 194

51 Return line, 15 Nm

- Connection of level control valve to manifold -Item 67-

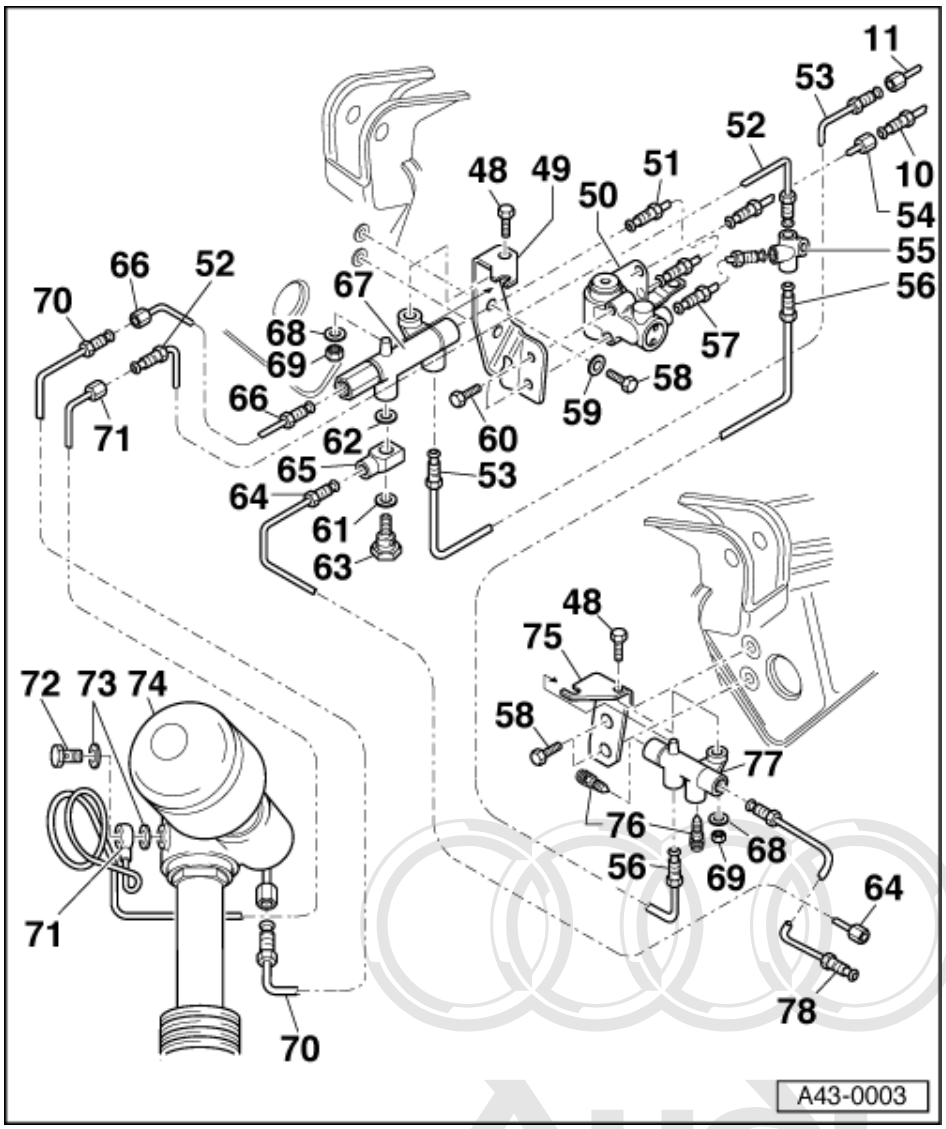

52 Pressure line 15 Nm
- Distribution piece -Item 55- joint / right rear longitudinal member

53 Return line, 15 Nm
- Wheel housing joint left rear => Fig. 3 / manifold

54 Pressure line 15 Nm
- Wheel housing joint left rear => Fig. 3 / level control valve

55 Distributor piece
- Pressure lines

56 Pressure line 15 Nm
- Distribution piece -Item 55- / Distribution piece -Item 77-

57 Pressure line 15 Nm
- Level control valve / Distribution piece -Item 55-

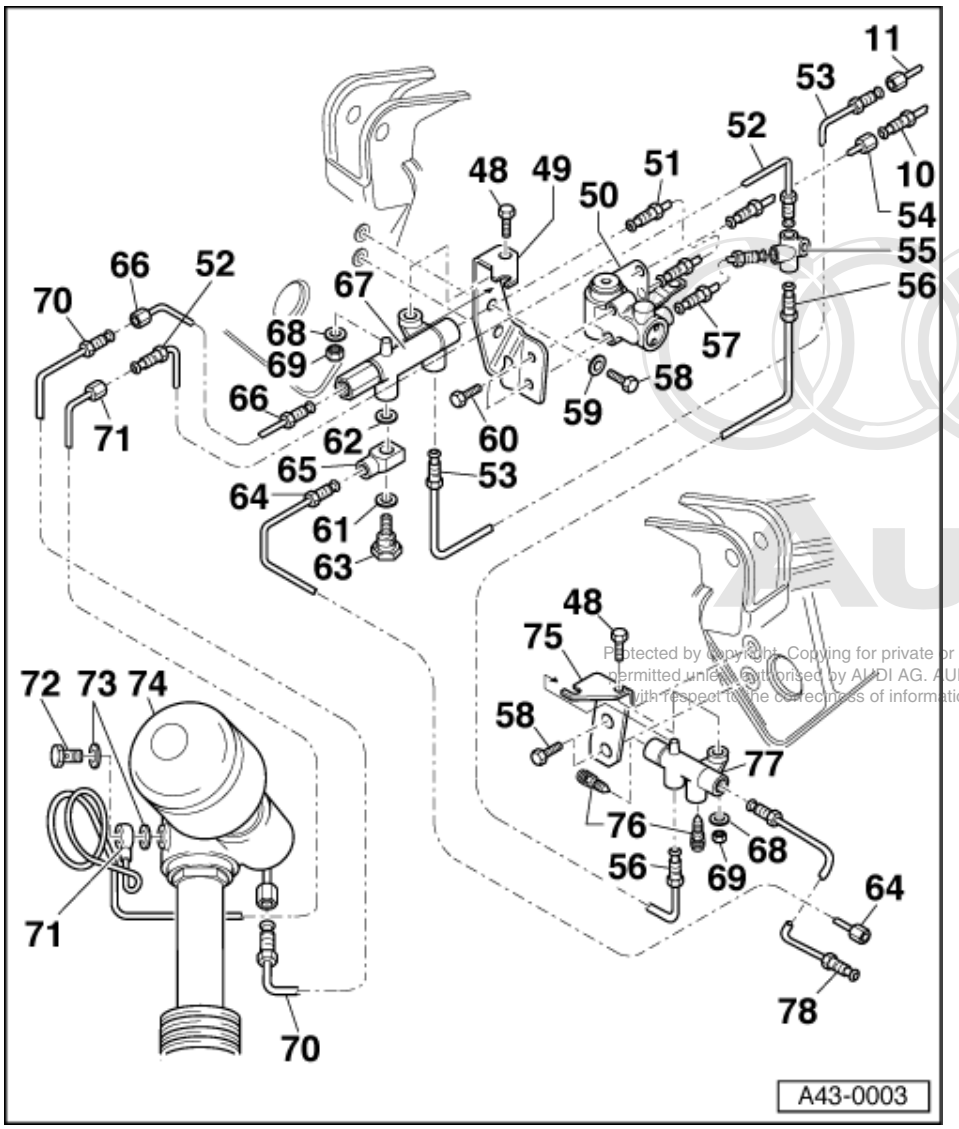

58 Hexagon bolt, 20 Nm
59 Washer
60 Hexagon bolt, 10 Nm
61 Sealing ring
- Always replace

62 Sealing ring
- Always replace

63 Banjo bolt, 25 Nm
64 Fluid return line, 15 Nm
- Manifold / left rear longitudinal member joint

65 Ring piece
66 Fluid return line, 15 Nm
- Manifold / right rear longitudinal member joint

67 Manifold
- Return line / fluid return lines

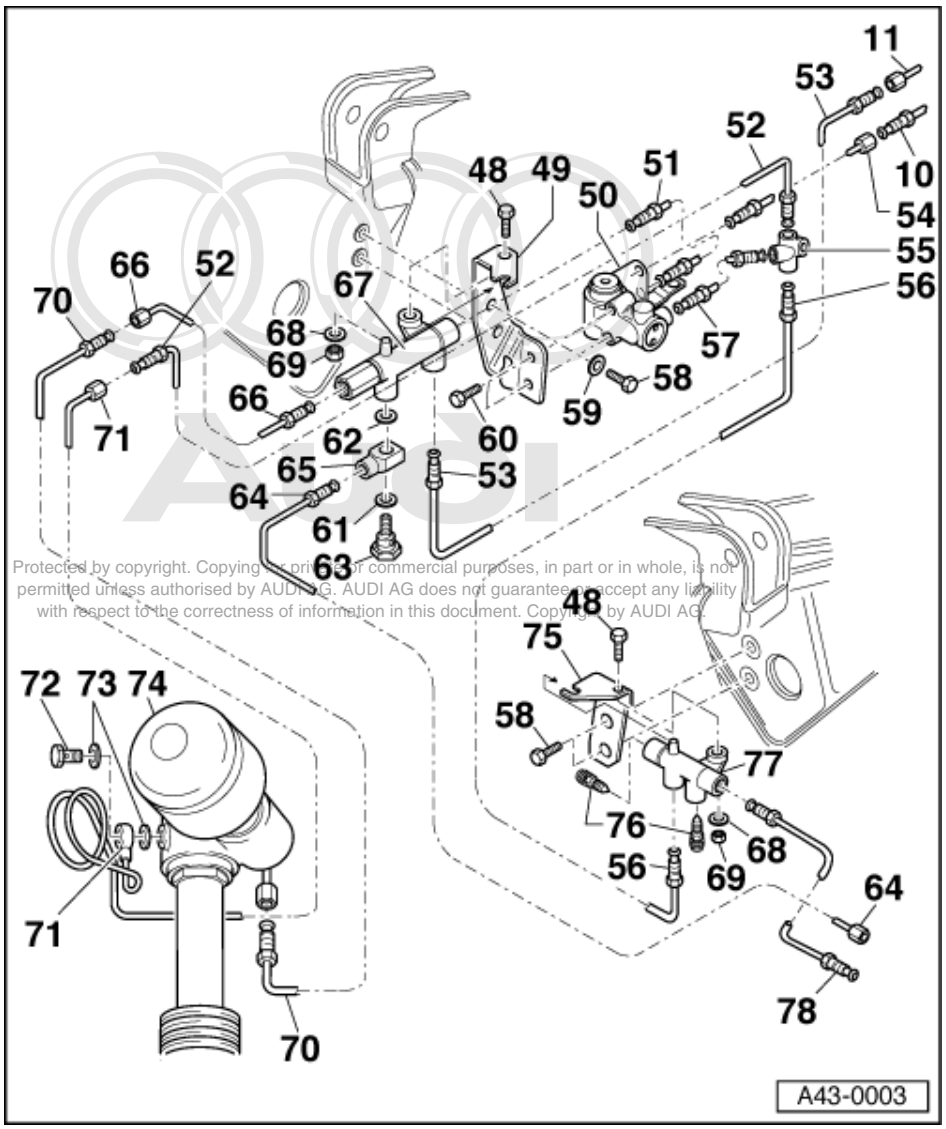

68 Washer
69 Hexagon nut, 10 Nm

Note:

Items -70- to -74- are laterally inverted on left and right sides of vehicle.

The spring cylinder is removed with the pressure line -Item 71-.

Loosen pressure line on right side of joint -Item 71- and -Item 52-.

On the left side of left rear longitudinal member joint -Item 78-.

70 Fluid return line
- Tighten at joint -Item 66- to 15 Nm

Tighten at rear wheel housing/spring cylinder joint to 10 Nm

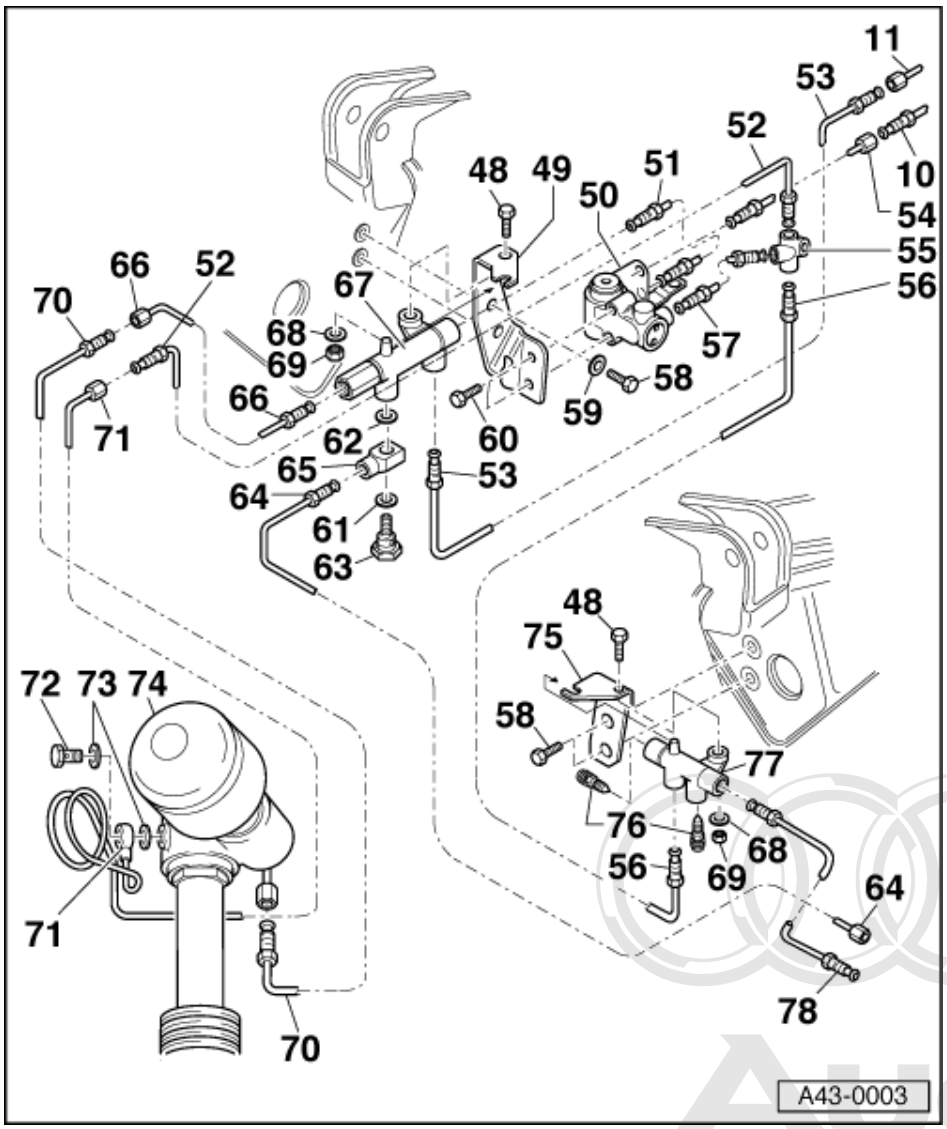

71 Pressure line 15 Nm

- Right rear longitudinal member / spring cylinder joint
- Note installation position at spring cylinder => Fig.4
- Treat pressure line with care when removing spring cylinder. It should not be bent.

72 Banjo bolt, 20 Nm

73 Sealing ring

- Always replace

74 Spring cylinder with pressure accumulator

Note:

The spring cylinder is removed with the pressure line -Item 71-.

- Removing and installing
  =>Page 117
- Checking spring cylinder
  =>Page 194
- Checking pressure accumulator
  =>Page 195

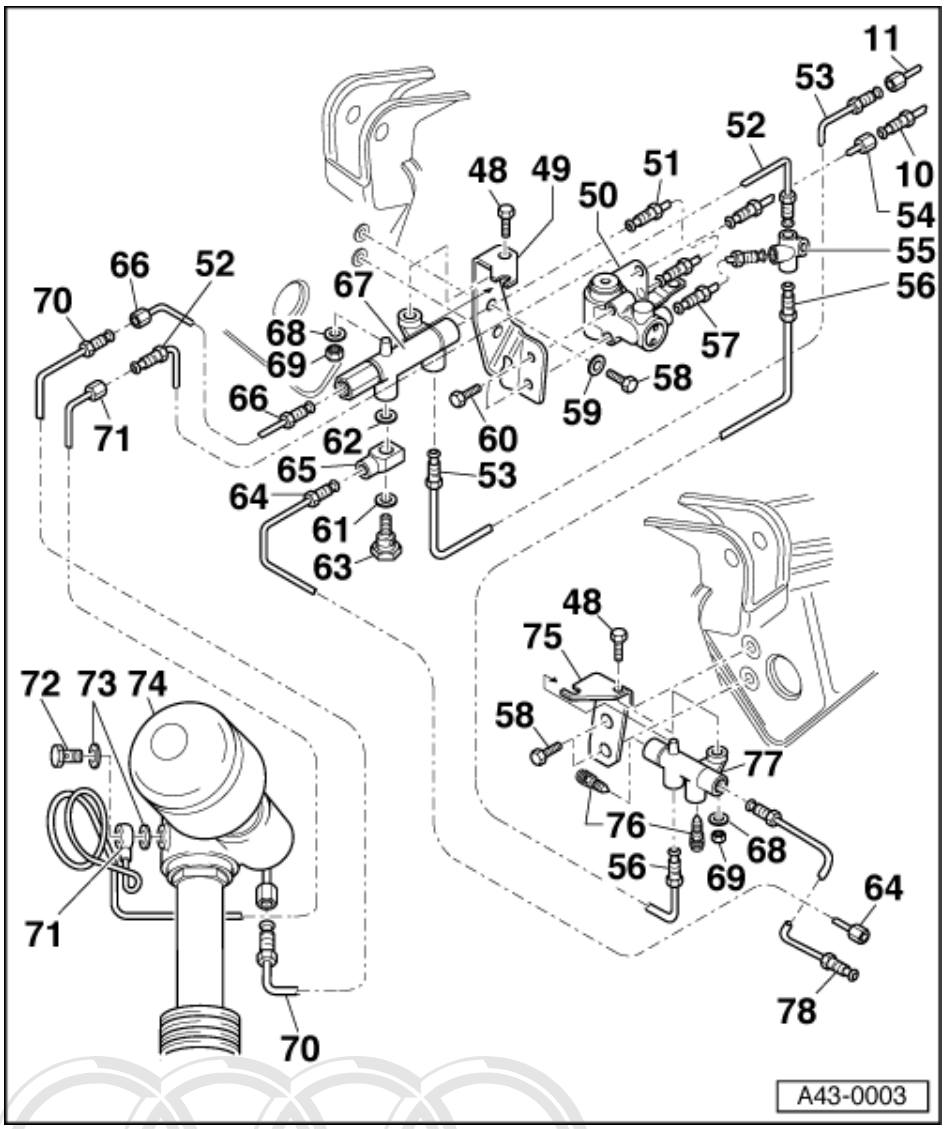

75 Bracket
76 Bleed valve, 15 Nm
77 Distributor piece
78 Pressure line 15 Nm

- Distribution piece -Item 77- joint / left rear longitudinal member

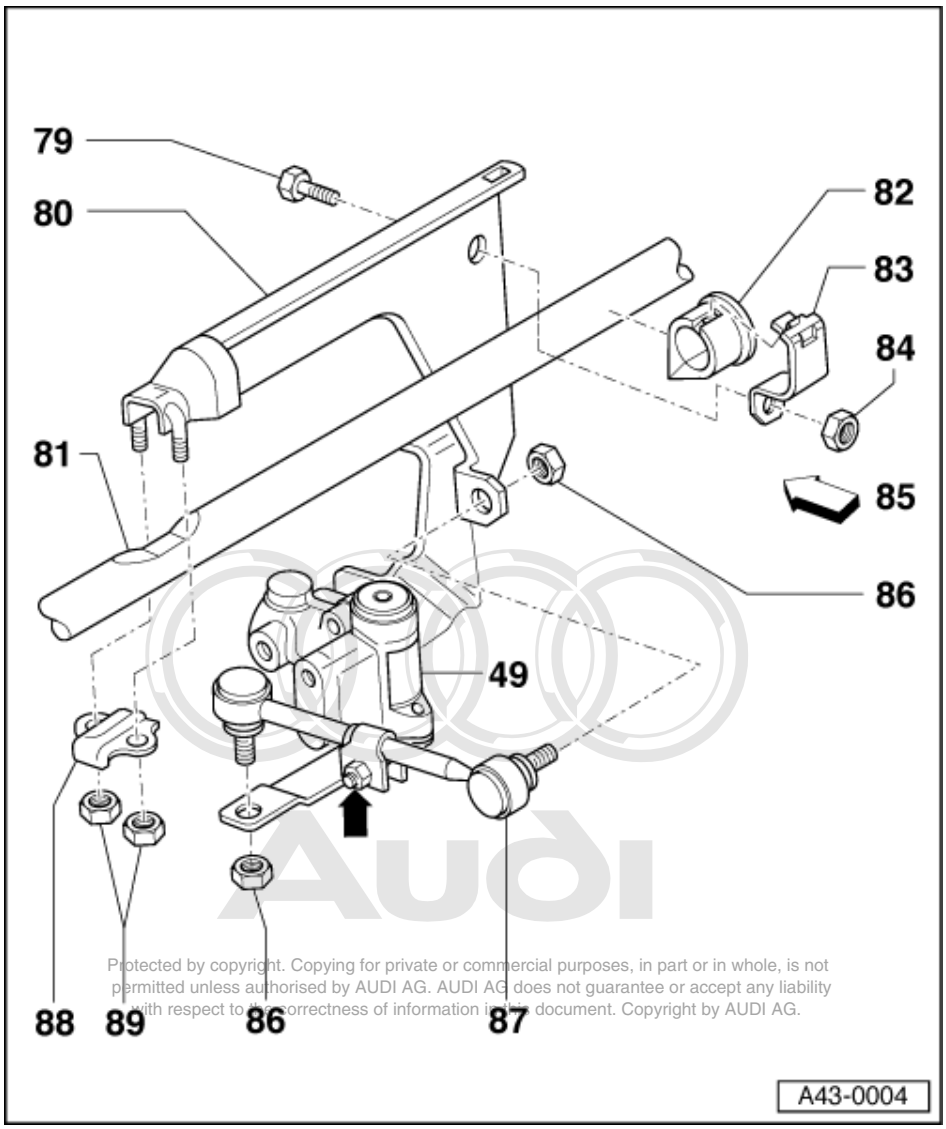

79 Hexagon bolt
80 Lever
81 Anti-roll bar
82 Rubber bush
83 Clamp
84 Self-locking nut, 10 Nm
- Always replace

85 Direction of travel
86 Self-locking nut, 5 Nm
- Always replace

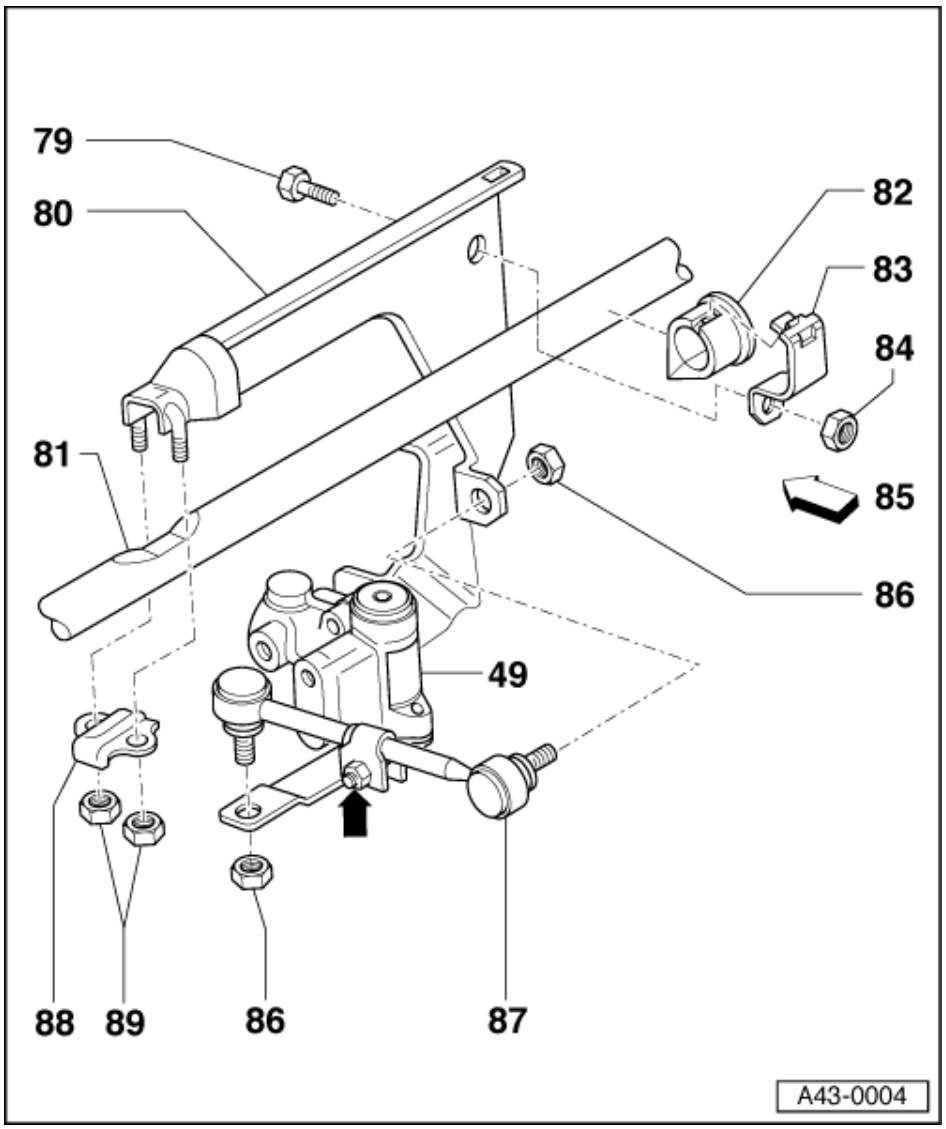

87 Connecting link

- Adjustable in length for purposes of adjusting self-levelling suspension:
- Loosen hexagon nut (arrow), adjust connecting link length, tighten nut to 2 Nm.

88 Securing plate

89 Self-locking nut, 5 Nm

- Always replace

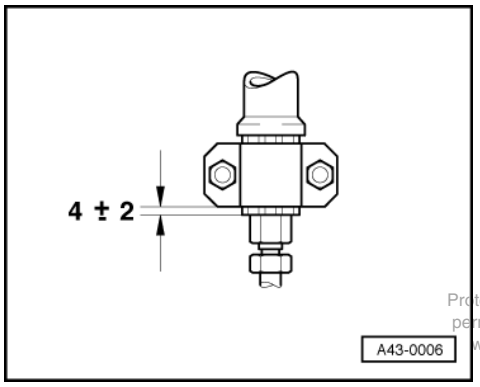

-> Fig.1 High pressure hose installation instructions

Applies to items 176 .

Applies to 6- and 8-cylinder engines.

- The expansion hose should protrude from the clamp by 4 mm±2 mm.

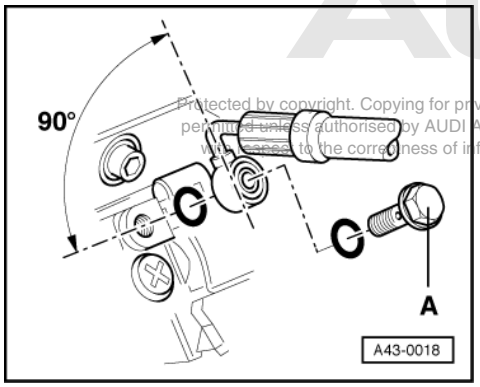

-> Fig.2 High pressure hose to tandem pump installation instructions

Applies to 8-cyl. petrol engines and 6-cylinder TDI engines.

A = 25 Nm

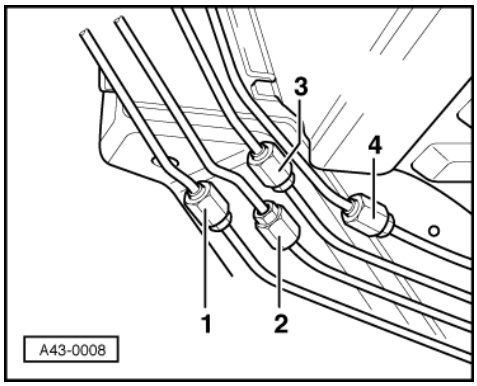

-> Fig.3 Wheel housing joint left rear

1 - Pressure line
2 - Return line
3 - Brake line
4 - Brake line

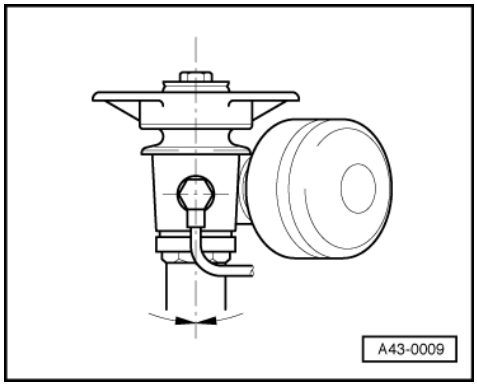

-> Fig.4 Installation position of pressure line on spring cylinder

3 - Checking self-levelling suspension

3.1 - Checking self-levelling suspension

3.2 - Checking delivery rate of plunger pump, 6-cyl. petrol engines

Applies to 2 and 5 valve versions

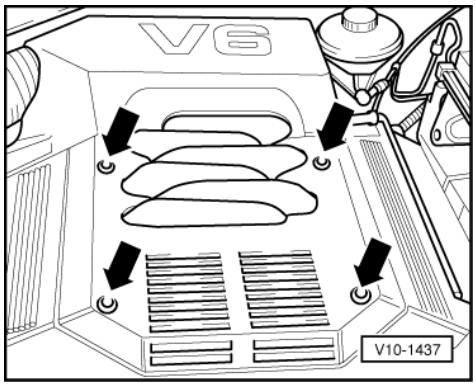

- -> Unclip motor cover at top and remove.

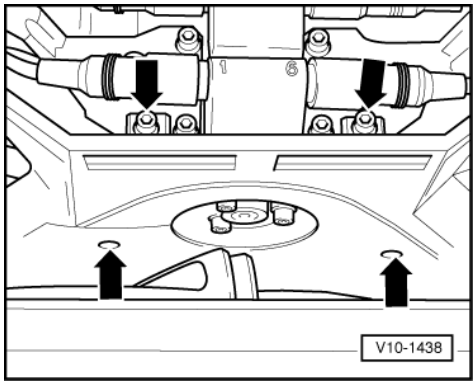

- -> Unscrew ribbed belt cover.

2-valve version only

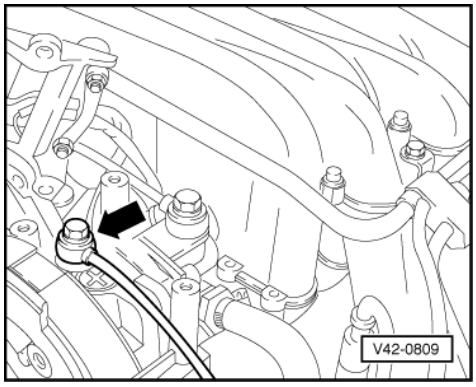

- Remove ignition coils with holder.
  2-valve version =>Page 327 .
  5-valve version =>Page 346 .
- Swivel ignition coil holder to the rear.
- -> Detach pressure line from pump.

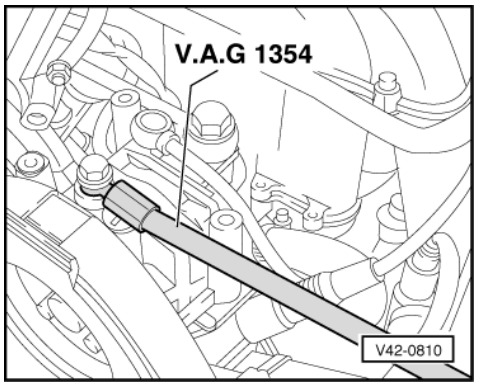

- -> Screw hose of pressure limiter -V.A.G 1354- with genuine banjo bolt and metal sealing rings, part no. N 013 808 3 to pump.
- Reconnect ignition wires to ignition coils if necessary.

- Unscrew expansion tank cap.

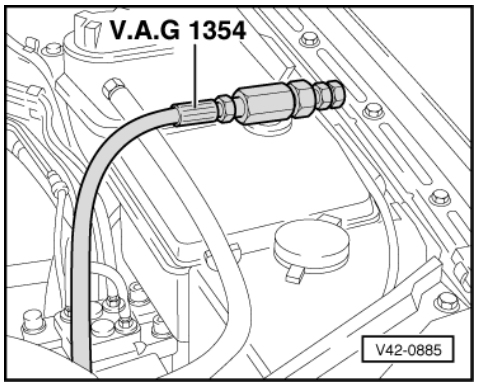

- -> Insert end of pressure limiter -V.A.G 1354- pipe into expansion tank.
- Leave engine idling until pipe has been bled.
- Switch off ignition and hold end of pressure limiter pipe over a graduated container.
- Allow engine to idle. Specified delivery rate: at least 0.2 l/min.
- Renew tandem pump if specified value is not attained.
  - For 6-cylinder 2-valve petrol engine => Page 327
  - For 6-cylinder 5-valve petrol engine => Page 331
- Switch the ignition off and reconnect pressure line.
- Check all unions for leaks, start engine and perform visual inspection.
- Fit ignition coils with holder.
- Fit engine top cover and ribbed belt cover.
- Check hydraulic fluid level with vehicle unladen => Page 316 , top up fluid if necessary.

3.3 - Checking delivery rate of plunger pump, 8-cyl. petrol and 6-cyl. TDI engines

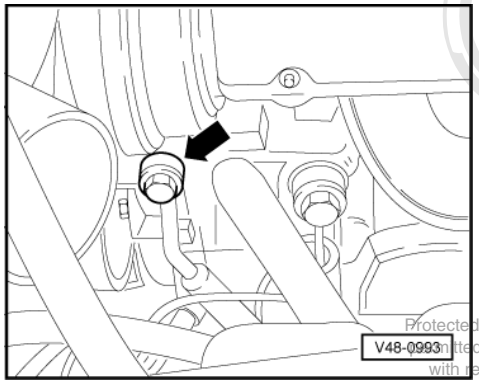

- -> Detach pressure line from pump.

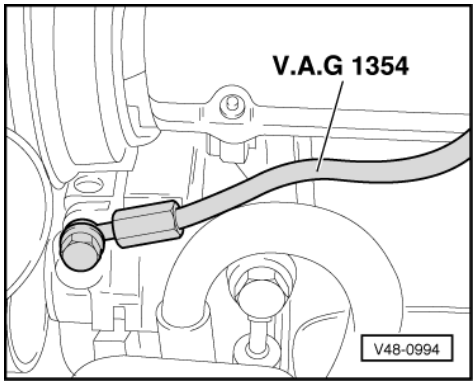

- -> Screw hose of pressure limiter -V.A.G 1354- with genuine banjo bolt and metal sealing rings, part no. N 013 808 3 to pump.

- Unscrew expansion tank cap.

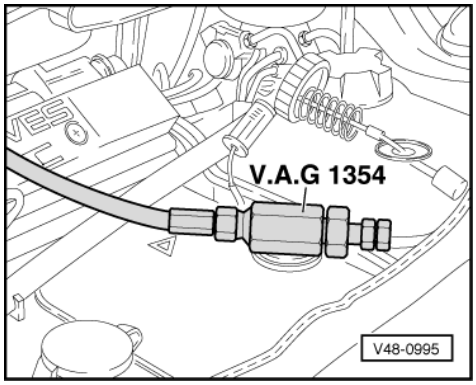

- -> Insert end of pressure limiter -V.A.G 1354- pipe into expansion tank.
- Leave engine idling until pipe has been bled.
- Switch off ignition and hold end of pressure limiter pipe over a graduated container.
- Allow engine to idle. Specified delivery rate: at least 0.2 l/min.
- Replace tandem pump if specified value is not attained.
  - For 8-cylinder petrol engine => Page 368
  - For 6-cylinder TDI engine => Page 348
- Switch off ignition.
- Reconnect pressure line.
- Check all unions for leaks, start engine and perform visual inspection.
- Check hydraulic fluid level with vehicle unladen => Page 316 , top up fluid if necessary.

3.4 - Checking function of control valve

Leave engine idling, vehicle must be standing on wheels.

Checking raising function:

- Load luggage compartment with approx. 150 kg (2 people).
- Rear of vehicle must be raised (time required: up to approx. 2 min).

Checking lowering function:

- Remove load from luggage compartment.
- Vehicle must be lowered again after settling.

3.5 - Checking control valve and spring cylinder for leaks

Note:

Checking for leaks is best performed on a lifting platform with ramp or over a pit.

Checking control valve and right spring cylinder:

- Remove dust cap from one of the bleed screws (=> Item 187).
- Attach bleed hose of pressure tester -V.A.G 1354- to bleed screw.
- Open bleed screw, use suitable vessel to collect hydraulic fluid which emerges.
- Tighten bleed screw on distribution piece.
- Pull bleed hose off bleed screw on distribution piece and attach to bleed screw of pressure tester.
- Unscrew pressure line from distribution piece (=>Item 183).

- Connect pressure tester -V.A.G 1354- to pressure line, 15 Nm.
- Load luggage compartment with approx. 150 kg.
- Start the engine and run at idling speed.
- Observe reading on pressure gauge, switch off ignition at approx. 50 bar. Note gauge pressure.
- Leave vehicle for roughly 3 hours.
- Check reading on pressure gauge: Max. pressure drop 5 bar.
- If pressure drop exceeds 5 bar, either control valve or spring cylinder is leaking and should be replaced.
  - Open joint on -Item. 185).
  - If more than 0.2 cl of fluid escapes at this location, replace the right spring cylinder.
  - If no fluid escapes at this location, replace the control valve.
- Carefully open -V.A.G 1354- pressure tester bleed screw, use suitable vessel to collect hydraulic fluid which emerges. The pressure gauge pointer drops slowly. Remove pressure tester -V.A.G 1354-.

Checking control valve and left spring cylinder:

- This check is identical to right hand side except for the following steps.
- Open joint on -Item. 186).
- Connect pressure tester -V.A.G 1354- to pressure line, 15 Nm.
- If pressure drop exceeds 5 bar, either control valve or spring cylinder is leaking and should be replaced.
  - Open the joint on rear longitudinal member -Item 184).
  - If more than 0.2 cl of fluid escapes at this location, replace the left spring cylinder.
  - If no fluid escapes at this location, replace the control valve.
- Carefully open -V.A.G 1354- pressure tester bleed screw, use suitable vessel to collect hydraulic fluid which emerges. The pressure gauge pointer drops slowly. Remove pressure tester -V.A.G 1354-.

3.6 - Checking pressure accumulator

Note:

Checking for leaks is best performed on a lifting platform with ramp or over a pit.

- Remove dust cap from one of the bleed screws (=> Item 187).
- Attach bleed hose of pressure tester -V.A.G 1354- to bleed screw.
- Open bleed screw, use suitable vessel to collect hydraulic fluid which emerges.
- Tighten bleed screw on distribution piece.
- Pull bleed hose off bleed screw on distribution piece and attach to bleed screw of pressure tester.

Checking right pressure accumulator

- Unscrew pressure line -Item 187).
- Connect pressure tester -V.A.G 1354-, 15 Nm

- Loosen control valve connecting link -Item 188) to do so.
- Adjust linkage in direction of travel.
- Allow engine to idle.
- Observe reading on pressure gauge, switch off ignition at approx. 30 bar.
- Carefully open bleed screw of pressure tester -V.A.G 1354- until pressure gauge pointer slowly drops.
- Use suitable vessel to collect emerging hydraulic fluid.

Note:

The pressure at which the pointer stops dropping slowly and drops abruptly to 0 bar is the charging pressure of the pressure accumulator.

Specified value: 15 to 25 bar.

Checking left pressure accumulator

- Unscrew pressure line joint at right rear longitudinal member -Item 186).
- Connect pressure tester -V.A.G 1354-, 15 Nm
- Further testing is the same as for the right accumulator.
- After completing test, attach dust cap to bleed screw at distribution piece and check hydraulic fluid level on unladen vehicle => Page 316 , top up fluid if necessary.

Note:

If charge pressure is close to minimum pressure (15 bar), e.g. left pressure accumulator 15 bar and right pressure accumulator 16.5 bar, it is advisable to renew both spring cylinders.

4 - Adjusting self-levelling suspension

4.1 - Adjusting self-levelling suspension

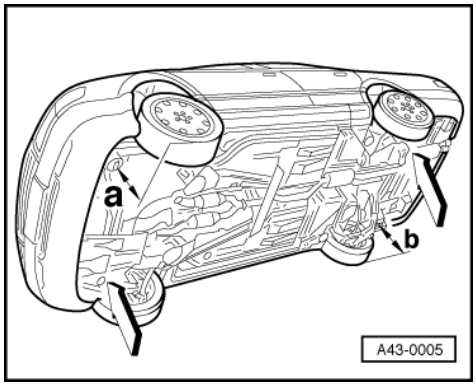

Note:

Adjustment is best performed on a lifting platform with ramp or over a pit.

Two wooden adjusting blocks sized 30 x 30 x 282 mm (dimension b) will be required.

- -> Position adjusting blocks on left and right at measurement points shown (dimension b).
- Load luggage compartment to the extent required for the adjusting blocks to make contact with the measurement points (approx. 150 kg). The forward measuring points are now at: 260 mm (dimension a).

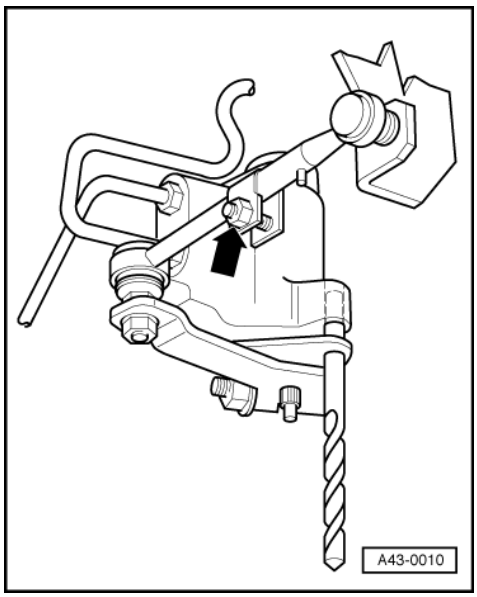

- -> Loosen securing nut at connecting link.
- Fix lever in position at level control valve housing with ø 4 mm diameter drill bit.
- Tighten securing nut at connecting link, 2 Nm.
- Remove drill bit from fixture.

44 - Wheels, Tyres, Wheel alignment

1 - Contact corrosion

1.1 - Contact corrosion

Contact corrosion can occur if non-approved fasteners are used (bolts, nuts, washers etc.).

For this reason, only fastening components which have been subjected to special surface treatment (Dachromet) are used in installation. These components can be identified by their greenish surface finish.

In addition, all rubber and plastic parts and all adhesives are made of non-electrically conductive materials.

If you are not sure of the reusability of parts, always fit new parts.

Please note the following:

Always use genuine service replacement parts.

These have been tested and are compatible with aluminium.

Accessories must be approved by AUDI AG.

Damage resulting from contact corrosion is not covered by the warranty.

2 - Wheels and tyres

2.1 - Wheels and tyres

The valid wheel/tyre combinations are indicated in:

=> Wheels/tyre wheel sender

General information

To ensure vehicle safety tyres are not to be renewed individually but rather at least on an axle basis.

The tyres with the deeper tread should always be fitted to the front wheels.

It is recommended to use tyres of the same make, design and tread type on all wheels.

Always replace rubber valve when renewing disc wheel or tyre.

Tyres are to be fitted with DOT marking facing outside of wheel; applies only to left side of vehicle in the case of direction-specific tyres.

A wheel/tyre combination for the right side of the vehicle must be fitted as spare wheel in the case of direction-specific tyres.

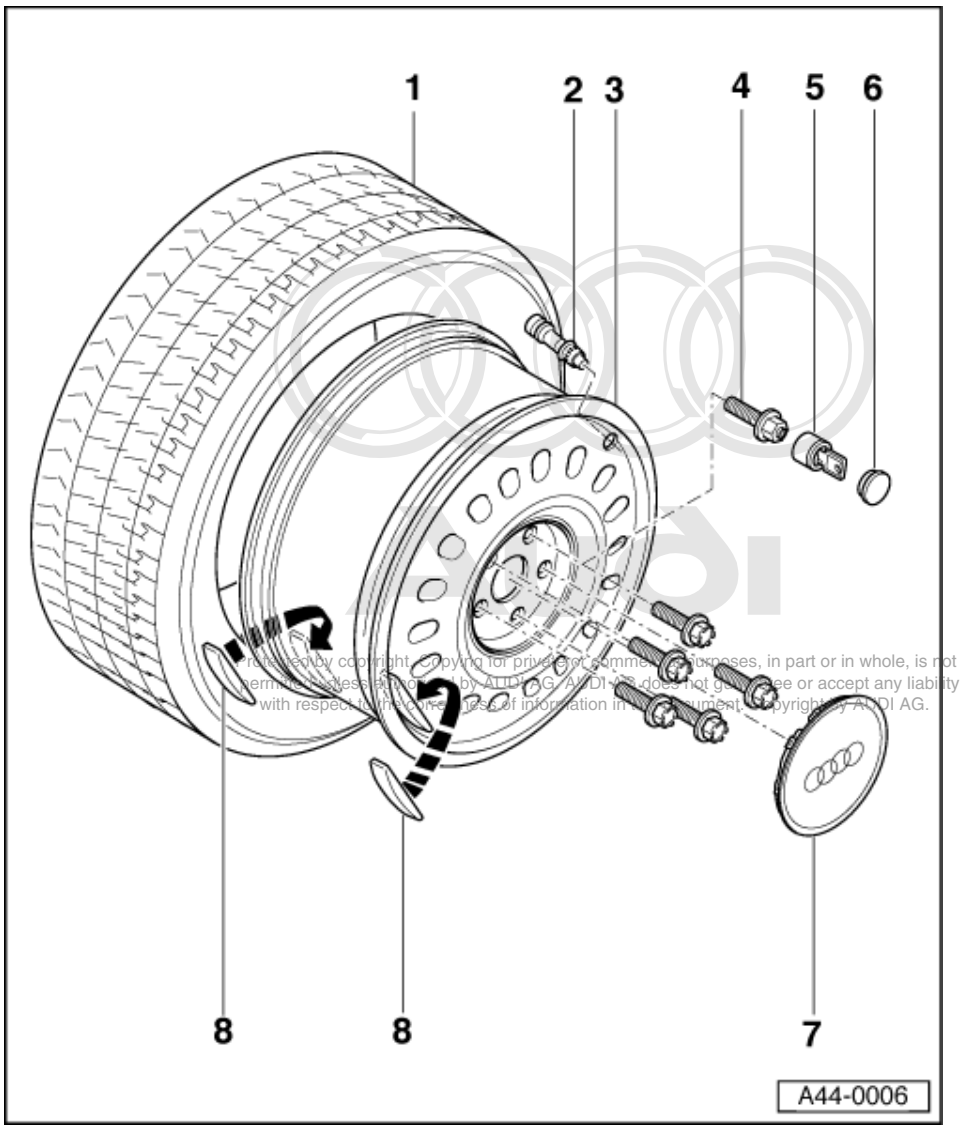

1 Tyres
2 Valve
- Always replace
- Only fit valve as per Parts Catalogue

3 Rim
4 Wheel bolt/lockable wheel bolt, 120 Nm
- Anti-theft wheel bolt => Fig. 1
- M14x1.5x27.5 mm

Various versions => Fig. 2

5 Lock cylinder
- Attach to designated wheel bolt and lock

6 Trim cap
- Attach to lock cylinder

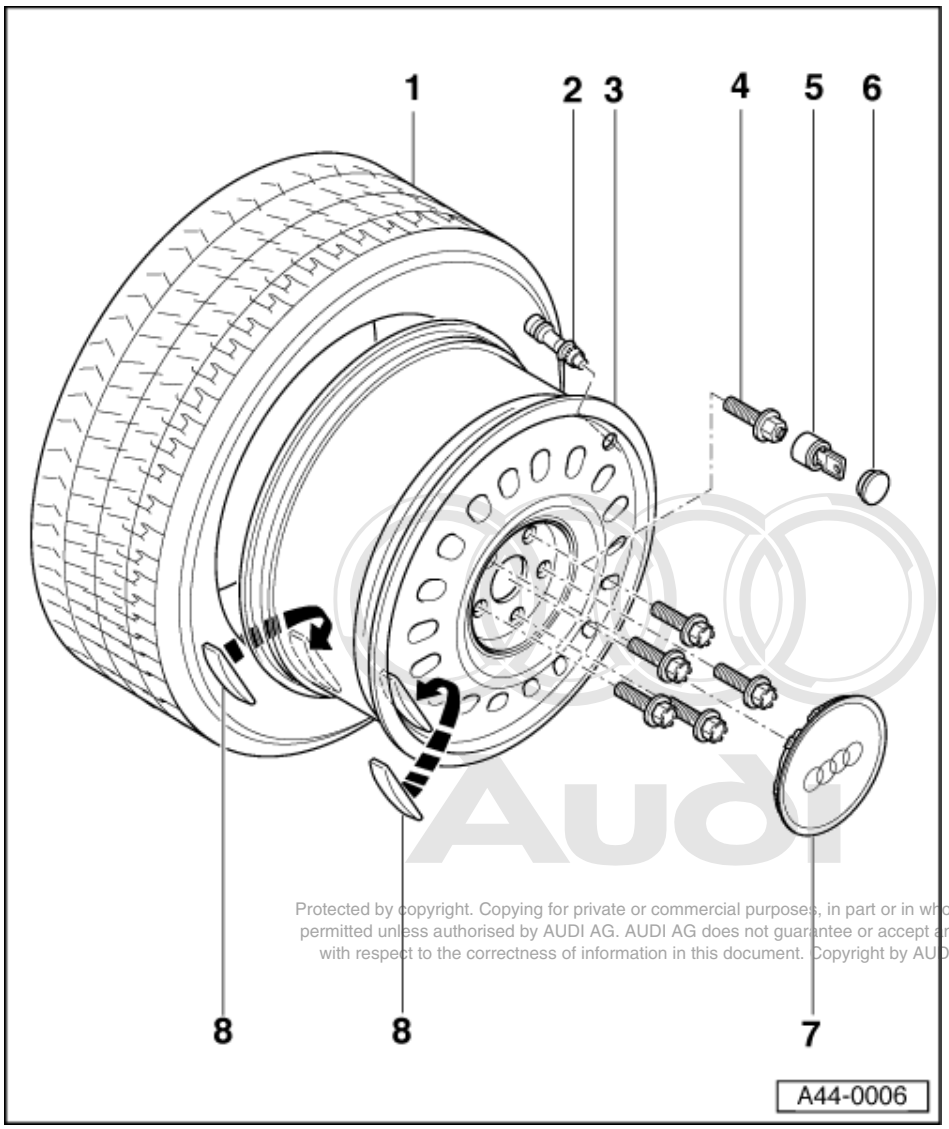

7 Trim cap

8 Adhesive balancing weights

- Max 60 g permitted per rim flange
- Remove dirt and grease from disc wheel at bonding point
- Pull off protective sheet.
- Bond on balancing weight at envisaged locations
- balancing => Wheels/tyres wheel sender

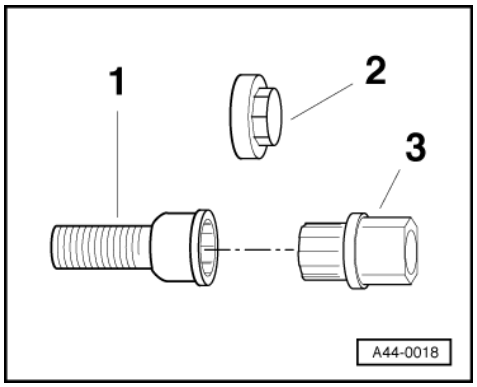

-> Fig.1 Anti-theft wheel bolt

- 1 - Anti-theft wheel bolt

- 2 - Protective cap

- 3 - Wheel bolt adapter

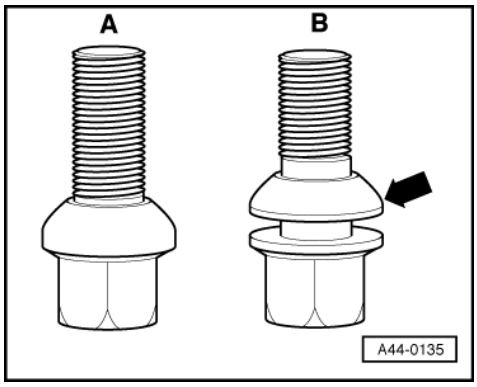

-> Fig.2 Wheel bolt versions

Wheel bolt - A - one part

Wheel bolt - B - two part

2.2 - Balancing wheels on the vehicle

=> Wheels/tyre wheel sender

2.3 - Instructions for changing/fitting wheels

Important Firm seating of wheel bolts and wheels is only guaranteed if the checks/instructions below are followed.

The following checks/instructions must be performed/observed on the removed wheel (rim).

- Check whether the rim hemispherical contact surfaces on the brake disc/wheel (rim) as well as brake disc/ wheel hub are free of corrosion and dirt.
  Remove oil, grease, and corrosion as necessary.
- Check that the centring holes of the wheel (rim) and the centring flange of the hub are free of corrosion and dirt.
  If necessary, remove any oil, grease and corrosion and apply Wax Spray D 322 000 A2 to ensure that the parts are protected against corrosion.

Note:

The wax spray must not come into contact with brake system components.

- If rust drops between the brake disc and the wheel hub during disassembly, remove it by blowing out with compressed air.

Important:
Always wear protective glasses.

- Check wheel bolts and wheel hub threads for cleanliness. The wheel bolts must be able to be screwed in easily along the entire thread length when installing the wheel.
- For example, use a wire brush to clean fouled wheel bolts.
  Heavily corroded and/or damaged wheel bolts must be renewed.

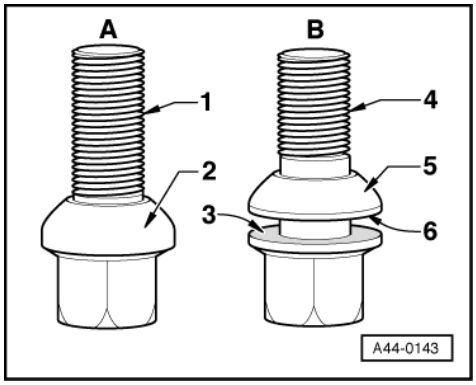

- If lightly corroded wheel bolts are re-used, these must be cleaned in the area of the hemispherical contact surface, the threads and on the sliding surfaces with Optimol TA paste, Part No. G 052 109 A2 as follows:

  -> A - One-piece wheel bolt
  - Threaded portion -1- and hemispherical contact surface -2- to be greased lightly
    B - Two-piece wheel bolt
  - To be greased lightly at threaded portion -4- as well as between bolt head contact surface -3- and hemispherical ring -6-.
  - The hemispherical contact surface -5- towards the wheel rim must not be greased

Note:

Only Optimol TA paste, Part No. G 052 109 A2 must be used. The paste must not make contact with brake system components.

- Ensure that the bore of the brake disc aligns with the thread of the hub. The thread of the wheel bolts must not contact the brake disc hole.

Fitting wheel

- Fasten all wheels as follows:
- Screw wheel bolts in evenly by hand.
- Tighten wheel bolts in diagonal sequence with vehicle still raised off the ground.
  - Tightening torque: 50 Nm
- Lower the vehicle onto the ground and tighten all the wheel bolts in diagonal sequence.
  - Tightening torque: 120 Nm

3 - Tyre pressure control system

3.1 - Tyre pressure control system

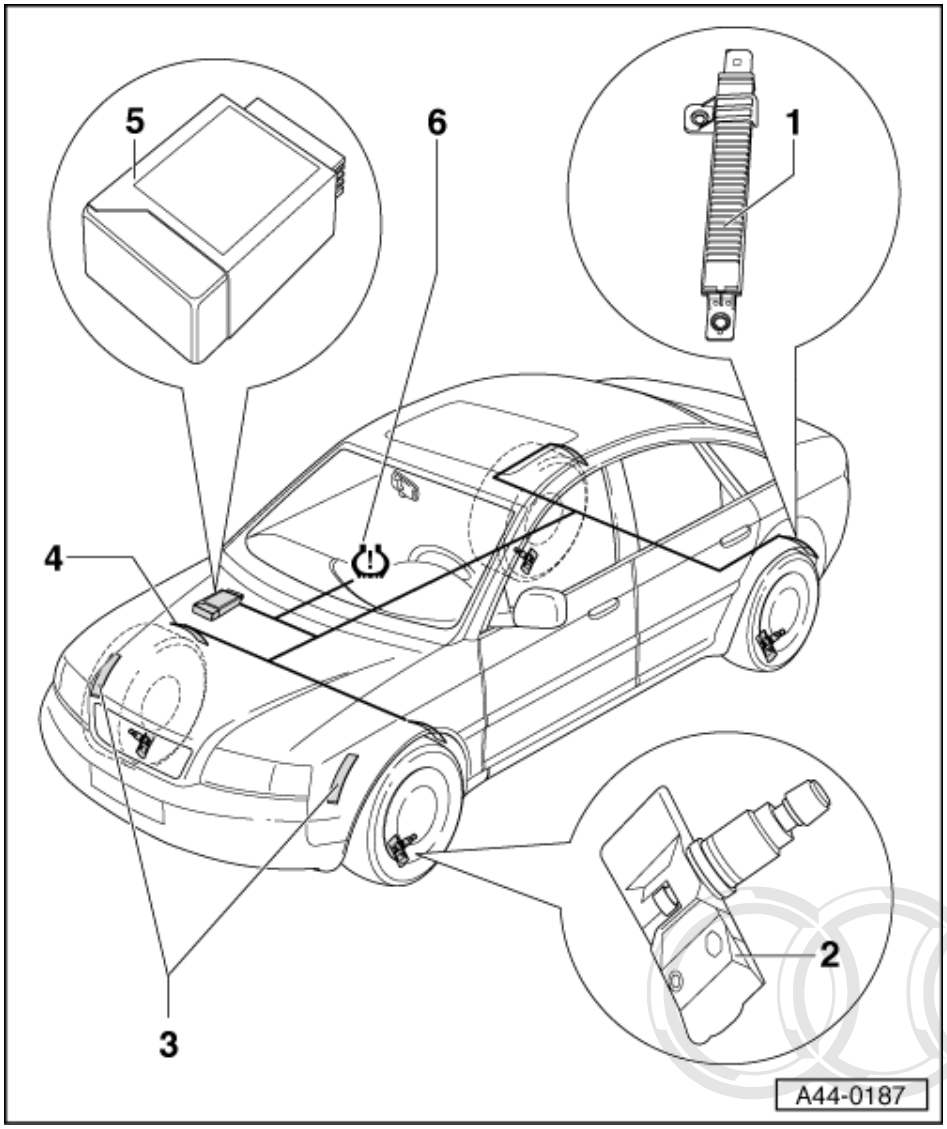

3.2 - Component overview of tyre pressure control system

1 Antenna (rear)
- 2 x

2 Wheel electronics
- 4 x

3 Antenna (front)
- With315 Mhz system
- PR No. 5D2/5D3 (see vehicle data sticker)

4 Antenna (front)
- With 433 Mhz system
- PR No. 5D1 (see vehicle data sticker)

5 Control unit -J502
- Underneath the front passenger seat

6 Display in dash panel

=> Running gear Self-diagnosis for ABS, ESP; Repair group 01

3.3 - Servicing tyre pressure control system

General information

Observe notes on operation in operating instructions.

Damaged wheel electronics or valves must be replaced for safety reasons.

Do not clean wheel electronics with steam cleaners or strong compressed air stream.

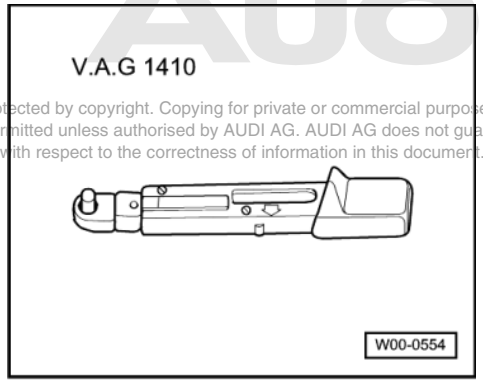

After using a tyre sealant fluid the wheel electronics must be replaced, as there is the danger of incorrect measurement when fluid is present at the pressure sensor.

Special tools and workshop equipment required

- V.A.G 1410

3.4 - Assembly overview - wheels/tyres

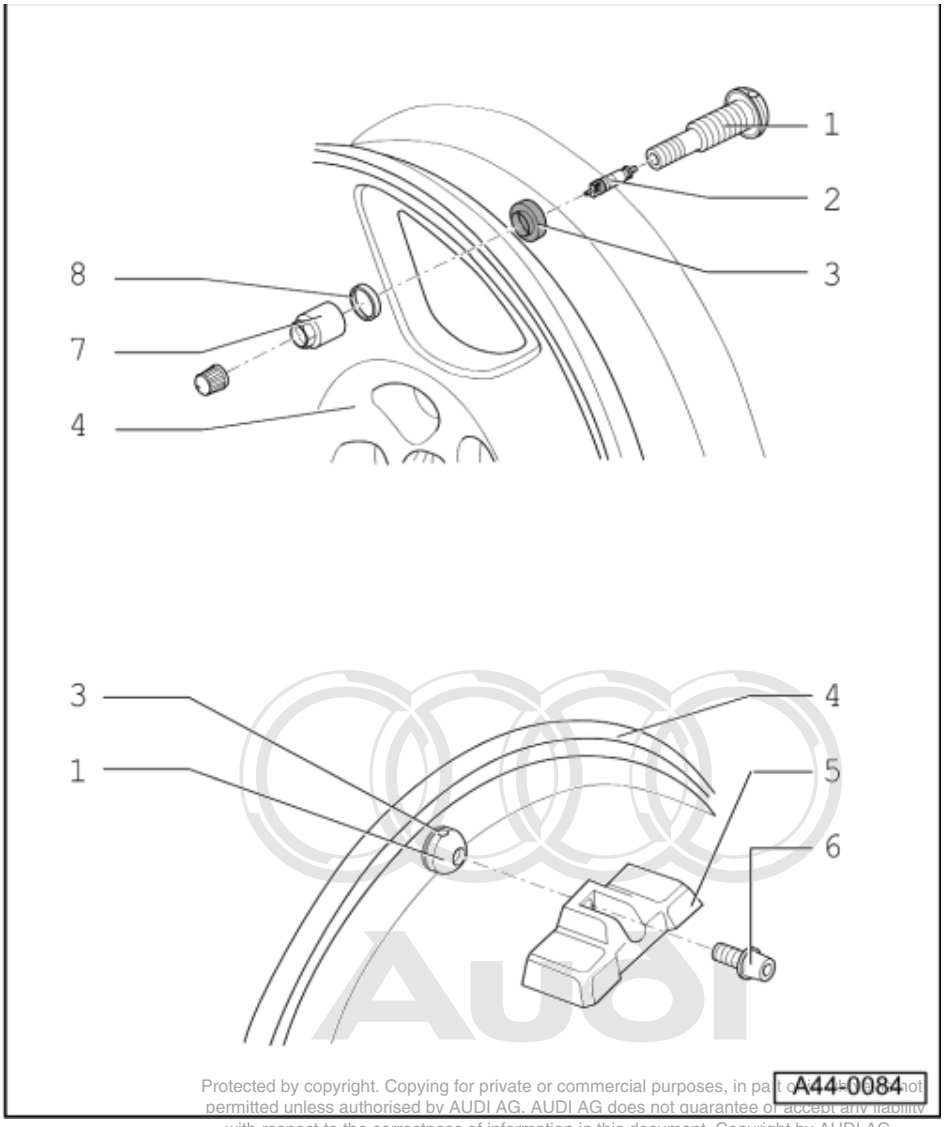

1 Metal valve body
- Only fit valve as per Parts Catalogue
- is delivered assembled
- Replace valve insert each time tyres are changed
- Removing and installing=>Page 206

2 Valve insert

3 Sealing ring
- Removing and installing=>Page 206

4 Rim
- Mounting and removing tyres =>Fig. 1 and Fig. 2 .

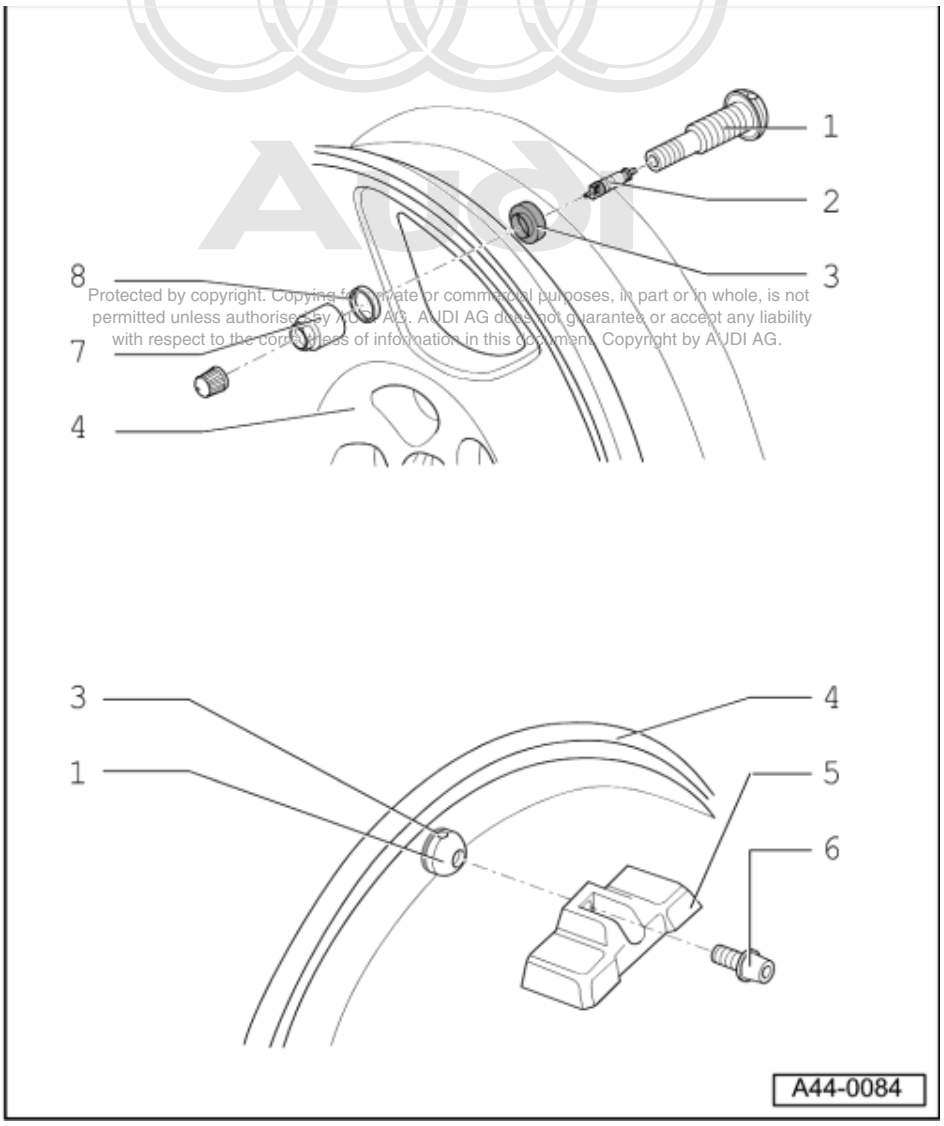

5 Wheel electronics
- Battery service life, approx. 7 years
- Remaining service life can be read via diagnosis

=> Running Gear Self-diagnosis for ABS, ESP; Repair group 01

- Must always be replaced completely
- Removing and installing reception antennas =>Page 207

6 Micro-encapsulated bolt (Torx T20)
- Tightening torque 4 Nm
- Always renew bolt

7 Union nut
- Removing and installing=>Page 206
- Tightening torque 4 Nm

8 Chamfered packing plate

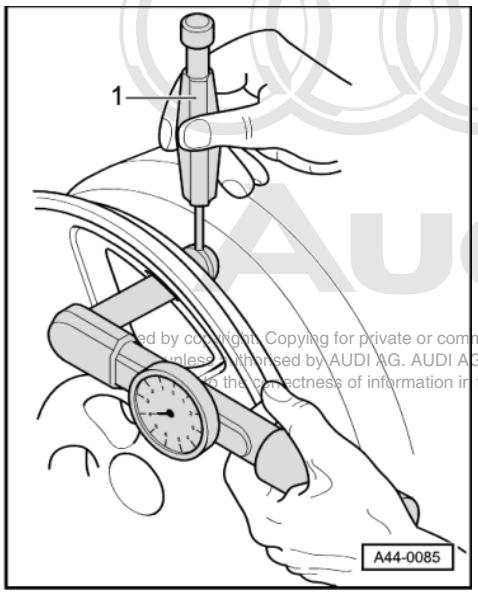

Removing and installing metal valve body

- -> Push metal valve with rubber seal from the inside through the rim.
- Attach chamfered packing plate and union nut from the outside and tighten by hand.
- Secure against twisting with counterhold -1- (poss. drill ø2 mm).

Tightening torque 4 Nm

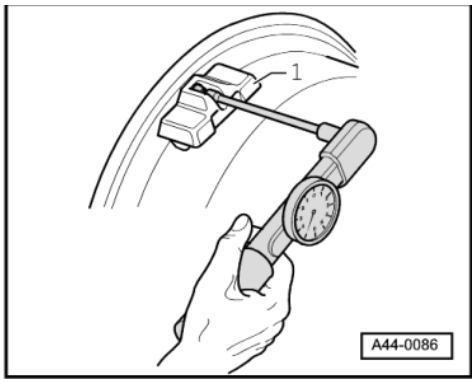

- -> Push wheel electronics -1- into drop centre and bolt onto rear of valve with micro-encapsulated bolt.

Tightening torque 4 Nm

Change of tyres

The nickel-plated valve inserted must be changed every time the tyres are changed.

The metal valve and the wheel electronics can be reused.

- Deflate tyre by unbolting the copper-plated valve insert.
- Remove tyre =>Fig. 1 .

Perform visual check of removed or damaged parts. Replace entire valve complex when connections are detached.

Always replace damaged wheel electronics.

- Install tyre =>Fig. 2 .
- Screw in new copper-plated valve insert.
- Inflate tyre, reattach plastic cap.

- Balance wheels.

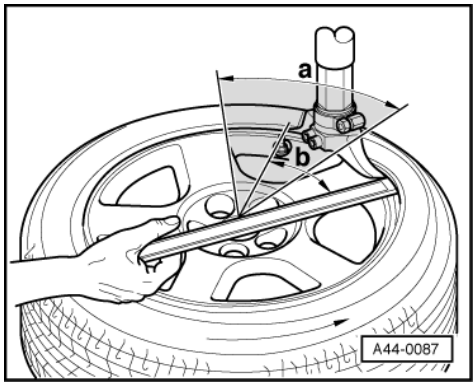

-> Fig.1 Removing tyre

Roll off or press off tyre

When using press-off blades, first press off tyre on opposite side of valve.

No use of press-off blades in shaded area -a-.

- Position puller knob near valve in such a way that the tyre lever can be applied approx. 30 degrees -b- from the valve.
- Then pull tyre off in valve area first.

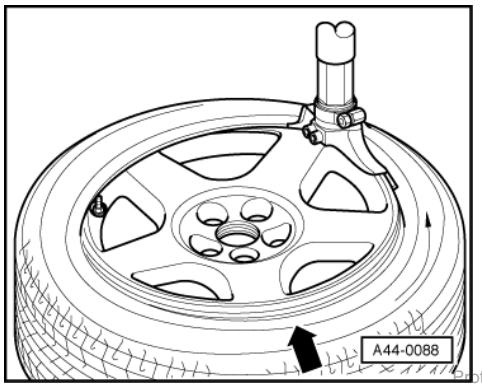

-> Fig.2 Installing tyre

Do not use press-off blades in valve area

- Position wheel electronics approx. 180 degrees opposite puller knob.
- Press tyres approx. 90 degrees in front of puller knob (see arrow) into drop centre.
- Install tyre.

Removing and installing front reception antennas

(433 Mhz, PR No. 5D1)

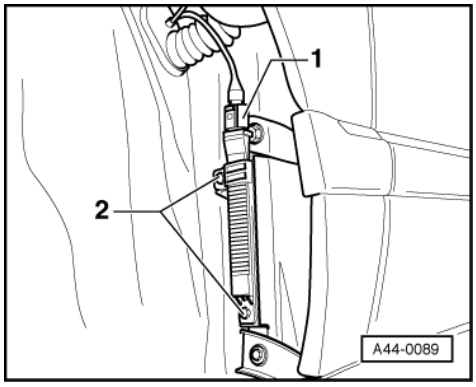

The reception antennas are located behind the wheel housing liners.

- Removing and installing front wheel-housing liner (complete)

=> General body repairs; Repair group 66

- Ignition off.
- -> Detach connector -1-.
- Unscrew bolts -2-
- Remove antenna

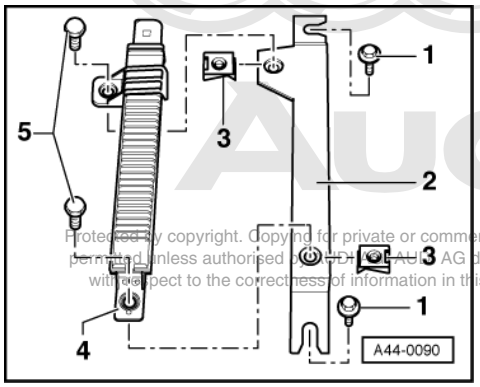

Removing and installing front reception antenna with bracket
(433 Mhz, PR No. 5D1)

- Wing panel bolt attachment -1-
  Tightening torque 4 Nm
- -> Antenna bracket -2-
- Snap nut -3-
- Antenna -4-
- Hexagon bolts -5-
  Tightening torque 2.5 Nm

Removing and installing front reception antennas

(315 Mhz, PR No. 5D2/5D3)

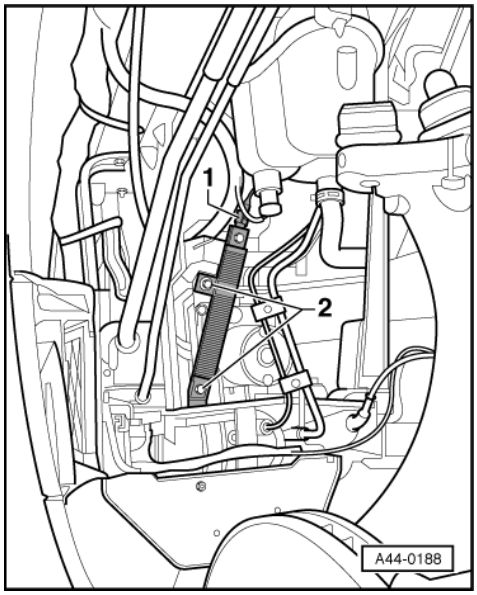

The reception antennas are located behind the wheel housing liners.

- Removing and installing front wheel-housing liners (front section)

=> General body repairs; Repair group 66

- Ignition off.
- -> Detach connector -1-.
- Unscrew bolts -2-
- Remove antenna

Installation is performed in reverse sequence

Removing and installing left rear reception antennas

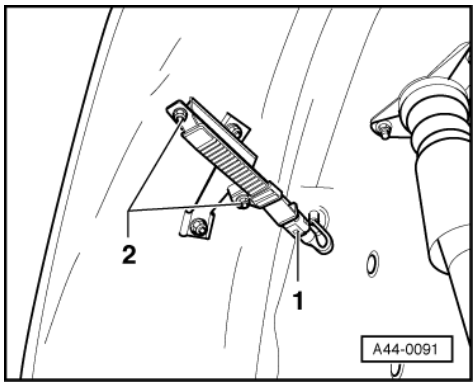

The reception antennas are located behind the wheel housing liners.

- Removing and installing wheel-housing liners

=> General Body Assembly; Repair group 66

- -> Detach connector -1-.
- Unscrew hexagon nuts -2-.
- Remove antenna

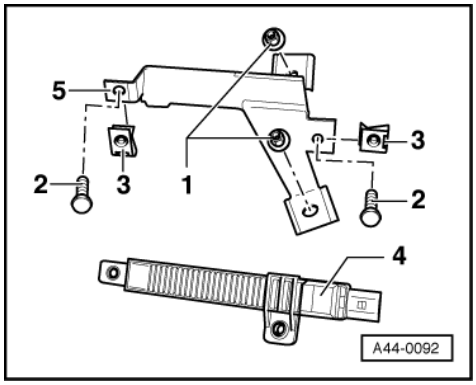

Removing and installing rear reception antenna with bracket

- Cap nut -1- tightening torque 3.5 Nm.
- -> Hexagon bolts -2-; tightening torque 2.5 Nm
- Snap nut -3-
- Antenna -4-
- Antenna bracket -5-

Installation is in reverse order of removal.

Removing and installing right rear reception antennas

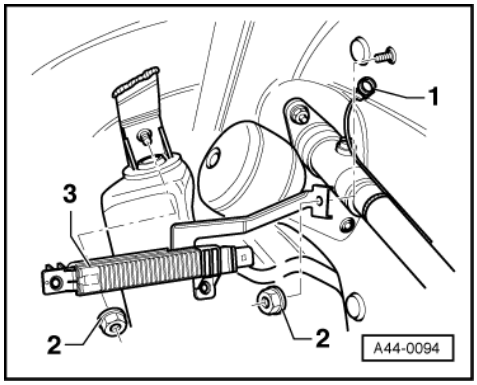

The reception antennas are located behind the wheel housing liners.

- Removing and installing wheel-housing liners

=> General Body Assembly; Repair group 66

- -> Detach connector -1-.
- Unscrew hexagon nuts -2-.
  Tightening torque 1.5 Nm
- Remove antenna -3-

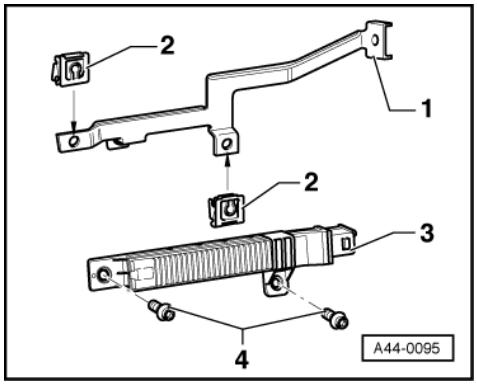

Removing and installing rear reception antenna with bracket

- Antenna bracket -1-
- -> Snap nut -2-
- Antenna -3-
- Hexagon bolts -4-;
  Tightening torque 2.5 Nm

Installation is in reverse order of removal.

3.5 - Switching system on and off

When storing the tyre pressures, the system is switched on automatically (3 placed beforeOn).

In order to switch the system off, call up the setting menu and place an o beforeOninstead of ticking.

Whenever the ignition is switched on, the yellow tyre symbol is briefly displayed to prompt the driver with the information: Off

Important:
The tyre pressure control system and warnings do not work with the system in the off position. Thus the system should as far as possible always be switched on to ensure the vehicle user's safety.

3.6 - Function

The system monitors the tyre pressures adjusted and entered for monitoring by the user.

The following steps must be carried out beforehand:

Checking and correcting tyre pressures:

- First check and correct the tyre pressure of wheels on vehicle (including spare wheel) according to data found in:

=> Wheels/tyre guide

Saving tyre pressures:

After checking tyre pressures and correct filling of tyres, the current pressures need to be saved to the control system. The system then performs an automatic adaption procedure.

To do so, proceed as follows:

- Switch on the ignition and call up the Start menu.

Access the Adjustment menu via Adjusting -> Tyre pressure.

- Place a checkmark (3) in front of saving pressures.

The system confirms correct acceptance of the save command by issuing the message:

The current tyre pressures have been stored.

- Rotate the selection arrow to Back in order to access the Entry menu.

Note:

The adaption procedure for new monitoring conditions must be re-initiated after each tyre pressure change and each wheel change via selection of the item Save pressures.

4 - Wheel alignment

4.1 - Wheel alignment

4.2 - General information

Notes:

- Wheel alignment should not be checked before the vehicle has completed 1000 to 2000 km as then the coil springs have had time to settle.
- Vibrations can also be caused by excessive residual imbalance and/or vertical wheel runout.

Wheel alignment should be performed using VW/AUDI approved wheel alignment equipment.

Alignment always includes both front and rear axles.

Note:

- During adjustment operations, the relevant specifications must be adhered to as closely as possible.

Proper vehicle performance cannot otherwise be ensured.

Wheel alignment must be performed if:

Road holding is defective.
Following accident damage.
If axle components have been removed.
If tires are worn on one side.

Front axle component	Alignment required		Setting toe constant "S" required		Rear axle component	Alignment required	
	Yes	No	Yes	No		Yes	No
Rear upper link		X		X	Shock absorber		X
Front upper link	X				Coil spring		X
Guide link with hydraulic bush		X		X	Coil spring		X
Track control link		X		X	Trapezium link	X	
Suspension strut		X		X	Transverse link	X	
Bracket	X		X		Wheel bearing housing	X	
Wheel bearing housing	X		X		Track rod	X	
Track rod end	X		X		Anti-roll bar		X
Steering box	X		X				
Subframe	X		X				
Anti-roll bar		X		X			

4.3 - Specified values for wheel alignment

These nominal values apply to all engines

Vehicles up to 08.1999 (VIN 4D_X_004999)

Front axle	Running gear (1BA, 1BM, 1BG, 1BN)	Sport running gear (1BE, 1BD)	Heavy-duty running gear (1BT)
Camber	- 30' ±30'	- 45' ±30'	- 25' ±30'
Max. perm difference between the two sides	30'	30'	30'
Toe per wheel (setting in starting position)	+ 10' ±2'	+ 10' ±2'	+ 10' ±2'
Toe per wheel(checking value in starting position)	+ 10' ±5'	+ 10' ±5'	+ 10' ±5'
Toe constant per wheel (setting)	+ 20' ±2'	+ 20' ±2'	+ 20' ±2'
Toe constant per wheel (checking value)	+ 20' ±5'	+ 20' ±5'	+ 20' ±5'
Toe-out on turns at 20 degrees.1)	1° 25'*±30'	1° 25'*±30'	1° 25'*±30'

1) The steering angle of that wheel on outside of curve is less by this amount. It can be displayed as a negative value in the wheel alignment computer, depending on the manufacturer.

Vehicles from 09. 1999 (from VIN 4D_X_005001)

Visually identified by additional braces on front subframe. *=>Page 213*

Front axle	Running gear (1BA, 1BM, 1BG, 1BN +K8L)	Sport running gear (1BE, 1BD +K8L)	Heavy-duty running gear (1BT)
Camber	- 50' ±30'	- 65' ±30'	- 45' ±30'
Max. perm difference between the two sides	30'	30'	30'
Toe per wheel (setting in starting position)	+ 10' ±2'	+ 10' ±2'	+ 10' ±2'
Toe per wheel(checking value in starting position)	+ 10' ±5'	+ 10' ±5'	+ 10' ±5'
Toe constant per wheel (setting)	+ 20' ±2'	+ 20' ±2'	+ 20' ±2'
Toe constant per wheel (checking value)	+ 20' ±5'	+ 20' ±5'	+ 20' ±5'
Toe-out on turns at 20 degrees.1)	1° 25'*±30'	1° 25'*±30'	1° 25'*±30'

1) The steering angle of that wheel on outside of curve is less by this amount. It can be displayed as a negative value in the wheel alignment computer, depending on the manufacturer.

Braces

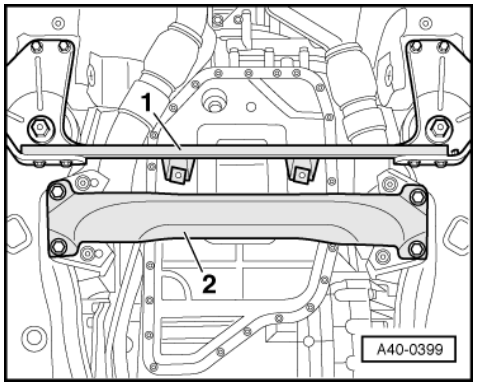

A8 from 09.1999 :

- Visual identification:
  Braces on front subframe.

Rear axle	Running gear (1BA, 1BM, 1BG, 1BN)	Sport running gear (1BE, 1BD)	Heavy-duty running gear (1BT)
Camber	- 40'*±30'	- 40'*±30'	- 40'*±30'
Max. perm difference between the two sides	30'	30'	30'
Toe per wheel	+ 6' ±5'	+ 6' ±5'	+ 6' ±5'
Maximum permissible deviation from direction of travel relative to longitudinal axis of vehicle	±10'	±10'	±10'

Additional vehicle data for vehicles with standard running gear (1BA, 1BM, 1BG, 1BN):

	Wheel size	Rim offset	Rear track width, max. perm. tolerance	Front track width, max. perm. tolerance
	7 J x 16	RO 42	1586 ±6 mm	1597 ±6 mm
	7 1/2 J x 16	RO 45	1580 ±6 mm	1591 ±6 mm
	8 J x 17	RO 48	1574 ±6 mm	1585 ±6 mm
	8 J x 18	RO 48	1574 ±6 mm	1585 ±6 mm
Wheelbase, max. perm. tolerance	2878 ±10 mm			
Max. steering angle at inner wheel	40°			

Note:

This additional vehicle data is merely intended to speed up and permit more accurate diagnosis is the event of minor accidents. A small deviation from data provided above without noticeable effect on the handling characteristics does not necessarily constitute a defect. As a result of production deviations these figures may also be outside of the given tolerance limits on select new vehicles.

additional vehicle data for vehicles with sports running gear (1BE, 1BD) :

	Wheel size	Rim offset	Rear track width, max. perm. tolerance	Front track width, max. perm. tolerance
	7 J x 16	RO 42	1588 ±6 mm	1599 ±6 mm
	7 1/2 J x 16	RO 45	1582 ±6 mm	1593 ±6 mm
	8 J x 17	RO 48	1576 ±6 mm	1587 ±6 mm
	8 J x 18	RO 48	1576 ±6 mm	1587 ±6 mm
Wheelbase, max. perm. tolerance	2882 ±10 mm			

Max. steering angle at inner wheel	40°

Note:

This additional vehicle data is merely intended to speed up and permit more accurate diagnosis is the event of minor accidents. A small deviation from data provided above without noticeable effect on the handling characteristics does not necessarily constitute a defect. As a result of production deviations these figures may also be outside of the given tolerance limits on select new vehicles.

additional data for vehicles with heavy-duty running gear (1BT):

	Wheel size	Rim offset	Rear track width, max. perm. tolerance	Front track width, max. perm. tolerance
	7 J x 16	RO 42	1588 ±6 mm	1599 ±6 mm
	7 1/2 J x 16	RO 45	1582 ±6 mm	1593 ±6 mm
Wheelbase, max. perm. tolerance	2882 ±10 mm			
Max. steering angle at inner wheel	40°			

Note:

This additional vehicle data is merely intended to speed up and permit more accurate diagnosis is the event of minor accidents. A small deviation from data provided above without noticeable effect on the handling characteristics does not necessarily constitute a defect. As a result of production deviations these figures may also be outside of the given tolerance limits on select new vehicles.

4.4 - Test requirements:

- Check wheel suspension, suspension, steering and steering linkage for excessive play and damage.
- Tread depth difference of no more than 2 mm on an axle.
- Check tyre pressure.
- Vehicle curb weight

  Fuel tank must be full
  Spare wheel and onboard tools at relevant fitting location in vehicle
  The water container for the window/headlight washer system must be full.

- In vehicles with level control (1BG) switch on ignition before measuring and wait until the control process for the vehicle height has been completed.
- Ensure that the sliding plates and turntables are not touching the end stop when checking the alignment.

Please note

- The test equipment must be properly adjusted and attached to the vehicle (see equipment manufacturer's instructions).

  If necessary, ask for training from the manufacturer of your wheel alignment equipment.
  The wheel alignment stand and wheel alignment equipment/wheel alignment computer can deviate in time from their original levelling/setting.

  The wheel alignment stand and wheel alignment equipment/wheel alignment computer should be calibrated at least once a year as part of maintenance work.
  - Treat these highly sensitive units with care.

Explanatory notes on weight codes (PR nos.)

The running gear version fitted in the vehicle is indicated by the relevant PR no. on the vehicle data sticker. Number indicated.

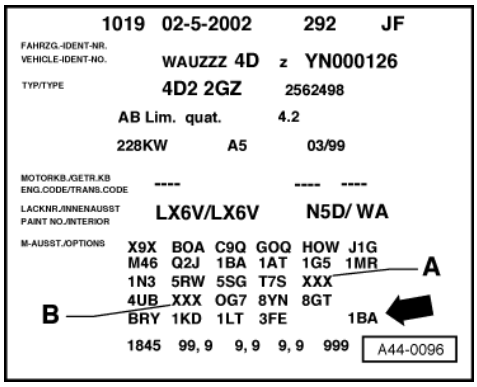

In this example the vehicle is fitted with the standard running gear, version 1BA -arrow-.

- Item -A- indicates the PR No. for the front axle.
- Item -B- indicates the PR No. for the rear axle

-> The vehicle data sticker is at the rear in the spare wheel well.

1BA = Standard running gear

1BM = Standard running gear Europe

1BD = Sports running gear Audi S8

1BE = Sports running gear

1BT = Heavy-duty running gear (approx. 7 mm higher)

1BN = Running gear with level control system Europe

1BG = Running gear with level control system

K8L = Audi A8 long (wheelbase + 130 mm)

4.5 - Special tools and workshop equipment required

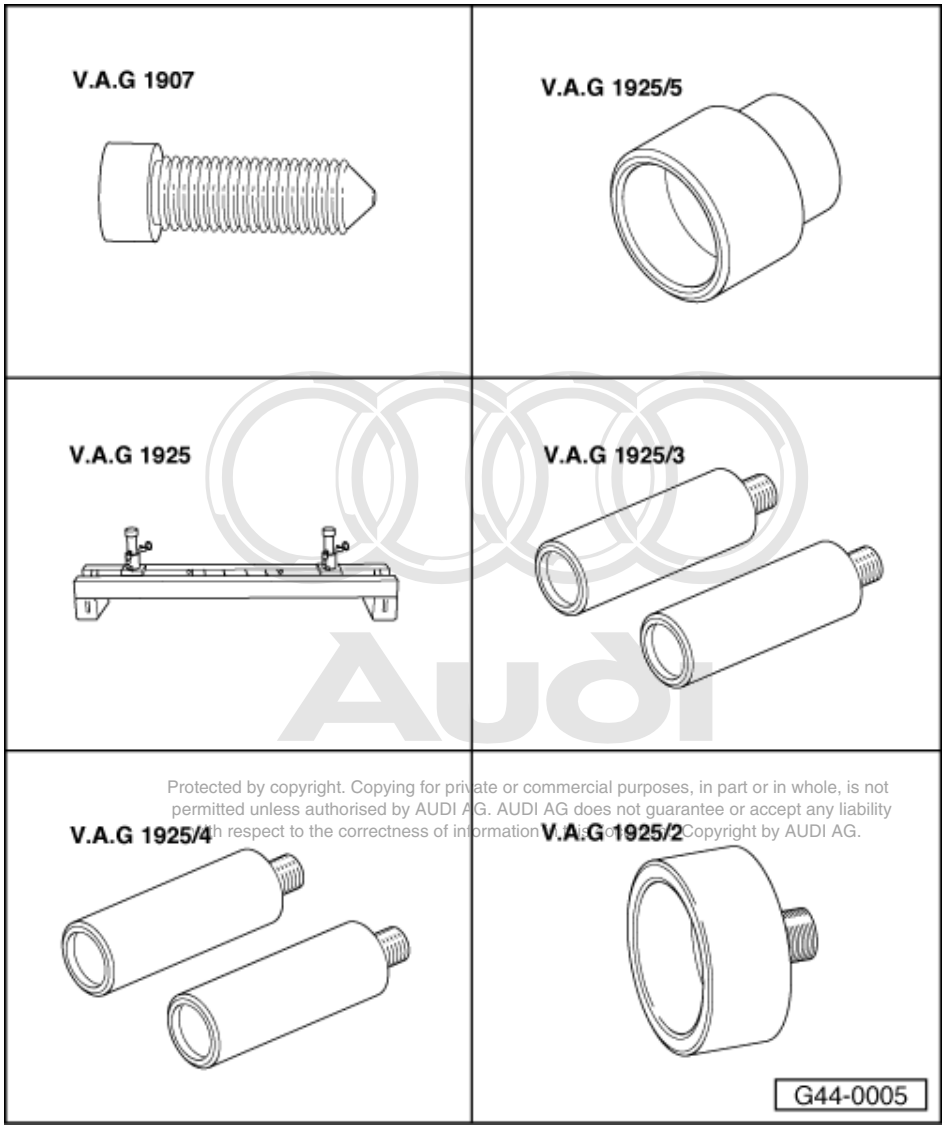

- V.A.G 1907
- V.A.G 1925
- V.A.G 1925/2
- V.A.G 1925/3
- V.A.G 1925/4
- V.A.G 1925/5

The use of adapter V.A.G 1925/3 or V.A.G 1925/4 is dependent on type of lifting platform.

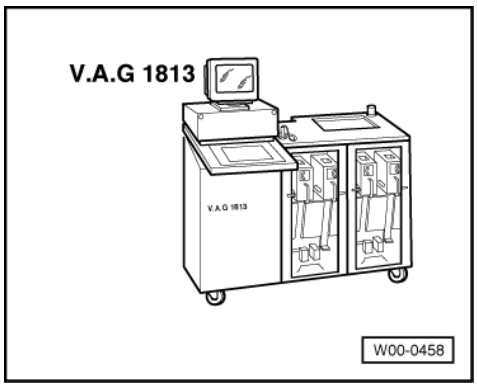

◆ V.A.G 1813

4.6 - Measuring procedure

- Ensure that the sliding plates and turntables are not touching the end stop when checking the alignment.
- Vehicle accurately aligned, bounced several times and allowed to settle.
- The test equipment must be properly adjusted and attached to the vehicle (see equipment manufacturer's instructions).

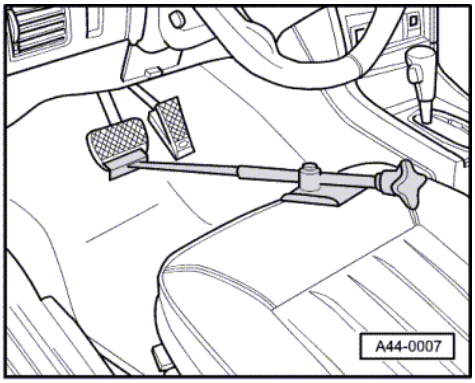

- Perform wheel run-out compensation.

Note:

◆ Perform wheel runout compensation.
The permissible side-wheel runout may already be exceeded due to the permissible wheel rim run-out. In such cases it is not possible to correctly set the toe-in without performing the wheel run-out compensation.

- -> Insert brake pedal depressor.

4.7 - Adapter allocation

Adapter	Running gear (1BA, 1BM)	Sport running gear (1BE, 1BD)	Heavy-duty running gear (1BT)	Level control system (1BG, 1BN)
V.A.G 1925	X	X	X	X
V.A.G 1925/2	X	X	X	X
V.A.G 1925/4	X	X	X	X
V.A.G 1925/5		X		

4.8 - Toe constant "S"

Explanation:
If the wheel moves up or down against spring pressure, the toe of the wheel changes dependent on the compression and rebound travel. The resulting toe values are referred to as toe-in curve.
The change of the toe constant "S" is adjusted with vehicle lifted by vertical displacement of the track rod end, Page => 225
The wheel alignment computer calculates the toe constant "S" through a measured value in the starting position and through a measured value in lifted position. It compares the actual values with the specified values and displays them on the screen.
Depending on running gear different adapters are required for lifting.
Table allocation running gear and adapter, Page => 218
Note:
An incorrectly set toe constant causes incorrect steering of the vehicle when braking/accelerating or when driving over uneven ground.

4.9 - Bringing vehicle into starting position for alignment check

Running gear 1BA, 1BM, 1BE, 1BD, 1BG, 1BN, 1BT.
Note:
Depending on the type of wheel alignment equipment used, it may be necessary to raise the front axle of the vehicle in order to insert the spacer gauge -V.A.G 1925-. Bounce the vehicle after lowering it.

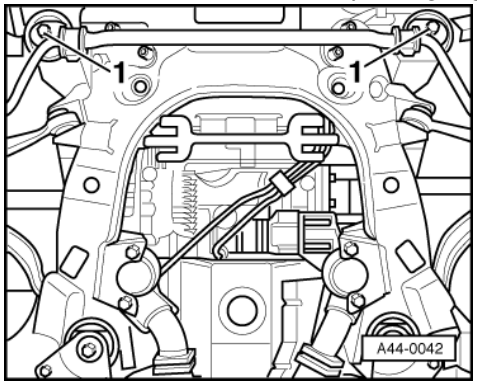

- -> Insert spacer gauge -V.A.G 1925- with adapters - V.A.G 1925/2- and screw both threaded spindles out until...
- .....they just rest against the front sub-frame bolts -arrow-.

  This must not cause the vehicle to be lifted.
  This must not yet cause the vehicle to be lifted.

Now the vehicle is in the starting position.
- Switch on ignition in vehicles with level control system and wait until vehicle height is levelled out.

Vehicle with sports running gear 1BE

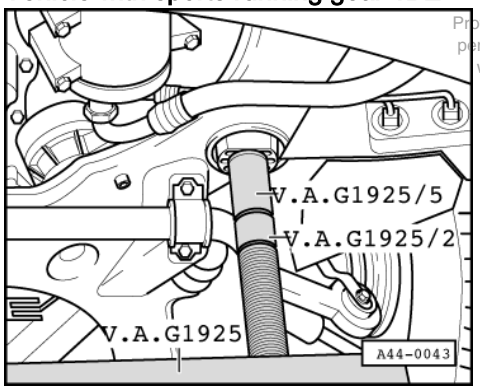

- -> Position axle lift under front jacking points and raise vehicle.
- Place adapter -V.A.G 1925/5- onto adapter -V.A.G 1925/2- of spacer gauge.
- Lower vehicle onto adapters.

Now the vehicle is in the starting position.

With all running gear versions

in this position, checking is carried out with the alignment software whether the present toe-in value per wheel corresponds to a specified value of + 10` ± 30` (rough preliminary setting). If necessary, the toe-in must be corrected by adjusting the track rod length.

Wheel alignment specifications => Page 212 .

Indication is only given by the alignment software if correction is necessary.

Raise vehicle. Running gear 1BA, 1BC, 1BE, 1BG, 1BH, 1BP, 1BT, 1BJ.

When performing the next step, ensure that the wheels do not lose contact with the turntables when lifting.

If they do, do not move the turntables, Otherwise the result will be incorrect.

- Position axle lift under front jacking points and raise vehicle.

Note:

The vehicle is lifted by 60 mm.

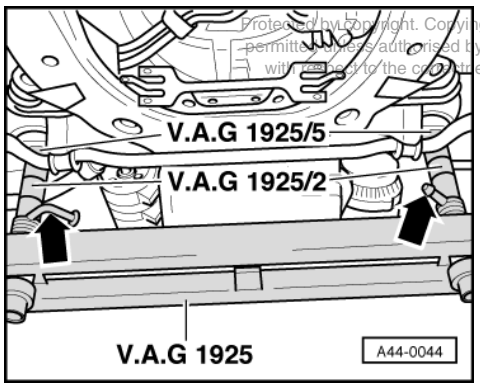

- -> Push cylinders out of the threaded spindles and secure in position with locking pins.

  Ensure that the locking pins -arrows- are correctly positioned.

- Lower vehicle onto spacer gauge V.A.G 1925.

4.10 - Crash-damaged vehicles

Before the toe or the toe constant "S" is checked or adjusted with these vehicles steering centring must be carried out.

- Carry out steering centring according to instructions of wheel alignment computer.

When vehicles that had accidents are measured insert centring bolt V.A.G 1907.

Left- hand drive vehicles =>Page 255
Right- hand drive vehicles =>Page 301
Check whether the steering wheel is attached to steering column as horizontally as possible in "wheels straight- ahead" position.

If necessary, reposition steering wheel accordingly.

Centre position of rack is otherwise not guaranteed.

Vehicles with Electronic Stabilising Program (ESP)

If the steering wheel is misaligned in these vehicles the basic setting of the steering angle sensor must be checked.

=> Running Gear Self-diagnosis; Repair Group 01; Perform self-diagnosis Perform self-diagnosis

Summary of procedure for wheel alignment

Always adhere to the following sequence.

- Check rear axle camber and adjust if necessary => Page 221
- Check rear axle toe and adjust, if necessary =>Page 222
- Check front axle camber and adjust, if necessary =>Page 222
- Check toe constant "S" on front axle, if necessary.

The table on Pages 219 indicates when it is necessary to adjust the toe-in curve/toe constant "S".

- Check front axle toe at starting position and adjust, if necessary => Page 226 .

6 - If the front axle settings have been changed, the zero position compensation for the steering angle sender -G85 must be performed. (Only on vehicles with ESP)

=> Running Gear Self-diagnosis for ABS, ESP, RDK; Repair group 01;

4.11 - Setting rear axle camber

Wheel alignment specifications => Page 212 .

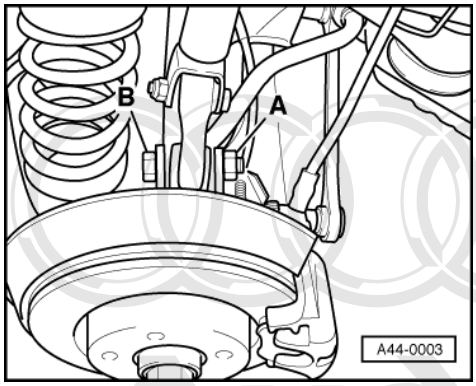

- -> Unscrew nut on bolted connection between wheel bearing housing and transverse link -A-.
- Adjust camber by turning eccentric bolt -B-.

Notes:

- The maximum adjustment range is 90° to the left or right of the centre position.
- The camber adjustment is shown with the wheel removed to simplify the illustration.

- Double-check the camber value after tightening nut -A-.

4.12 - Adjusting rear axle toe

Wheel alignment specifications => Page 212 .

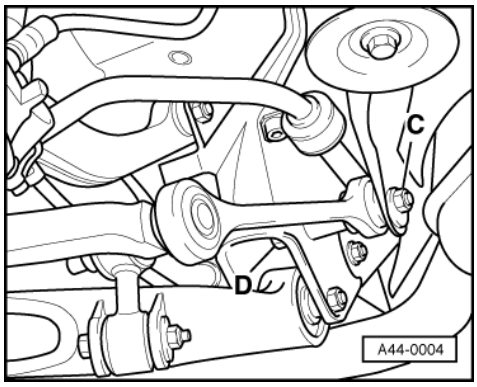

- -> Loosen securing nut -C-.
- Adjust toe accordingly by turning eccentric bolt -D-.
- Double-check the toe value after tightening nut -C-.

Notes:

- The maximum adjustment range is 90° to the left or right of the centre position.
- Adjusting the wheel toe settings automatically alters the geometric drive axis.

4.13 - Centring front axle camber

Wheel alignment specifications => Page 212 .

The camber cannot be adjusted.

By moving the subframe, however, it is possible to centre the camber evenly within the specified tolerance range.

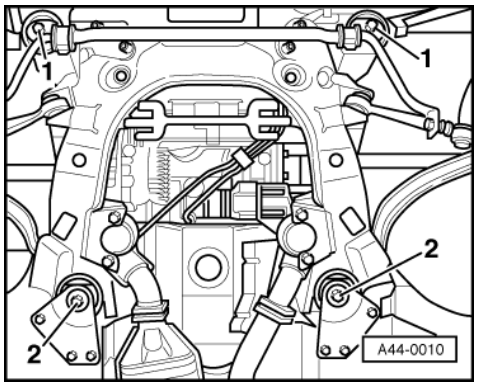

- Remove noise insulation tray.
- -> Unscrew all 4 bolts (-1- and -2-).

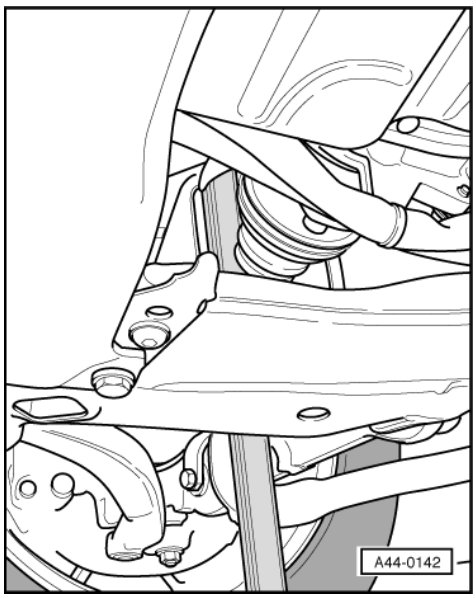

- -> Use a plastic-coated tyre lever to push the subframe into the appropriate position.

Push in the centre of the subframe, between the subframe itself and the longitudinal member of the body.

If you do not have a plastic-coated tyre lever, use a standard tyre lever with adhesive tape wrapped around it.

Important: Do not damage any components.

- Tighten both rear subframe bolts.
- Tighten one front subframe bolt.

At least three bolts must always remain tightened so that the position of the subframe is maintained during the procedure.

- Replace front subframe bolts with washer => Page 24
- Replace rear subframe bolts with washer => Page 21
- Checking of the toe-in is required after every corrective camber adjustment.

Bouncing vehicles with standard running gear

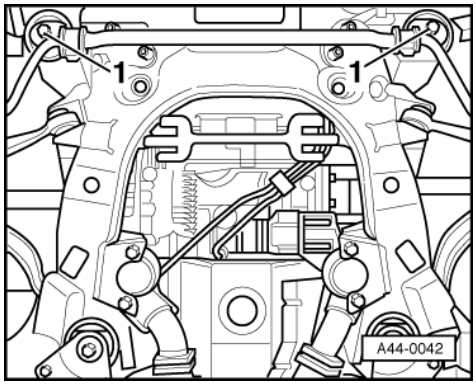

- -> Insert spacer gauge -V.A.G 1925- with adapters -V.A.G 1925/2- and screw both threaded spindles out until...

...they rest against the front sub-frame bolts -1-.

For standard running gear,

the wheel alignment software now checks whether the current toe-in value is according to the required setting.

If necessary, the toe-in must be corrected by adjusting the track rod length.

Wheel alignment specifications => Page 212 .

Bouncing vehicles with sports running gear

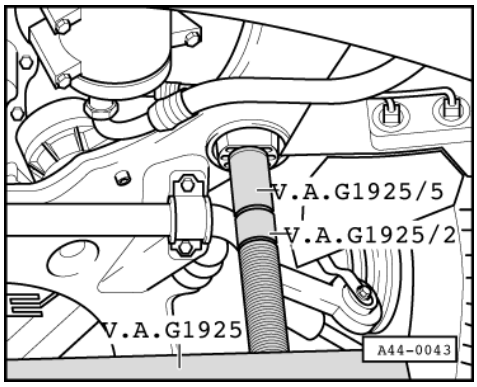

- -> Position axle lift under front jacking points and raise vehicle.
- Place adapter -V.A.G 1925/5- onto adapter -V.A.G 1925/2- of spacer gauge.
- Lower vehicle.

For sports running gear,

the wheel alignment software now checks whether the current toe-in value is according to the required setting.

If necessary, the toe-in must be corrected by adjusting the track rod length.

Wheel alignment specifications => Page 212 .

When performing the next step, ensure that the wheels do not lose contact with the turntables when lifting.

If this does happen, the turntables must not move in the process. Otherwise the result will be incorrect.

- Position axle lift under front jacking points and raise vehicle.

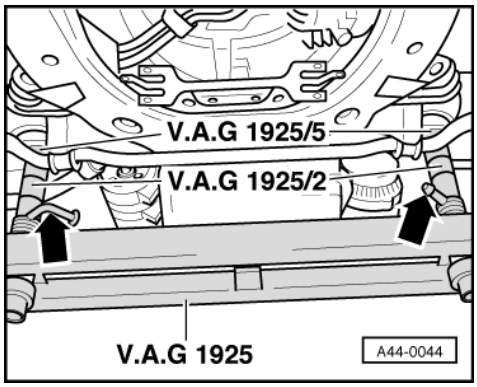

- -> Move cylinder out from threaded spindles.

  Ensure that the locking pins -arrow- are correctly positioned.

- Lower vehicle onto spacer gauge.

4.14 - Setting toe constant "S"

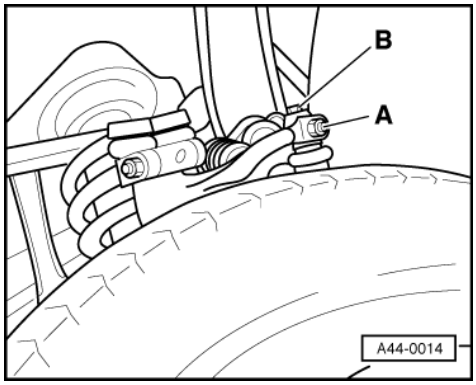

- -> Loosen bolt -A-.
- Unscrew bolt -B- approx. 4 mm.
  - Push track rod joint downwards to stop.
- Screw in adjustment bolt -B- until the exact specified value is achieved.
- Tighten hexagon nut -A- to 50 Nm and check value.

  Always use new hexagon bolts.

- Tighten bolt -B- to 7 Nm.
- Lower vehicle to starting position B1 again.
- Screw down threaded spindle.

  Not valid for vehicles with sports running gear.

- Bounce vehicles with standard running gear several times.

Checking toe constant after adjustment

The wheel alignment equipment re-checks the toe constant.

If the second check shows that the values are within the check value tolerance, the setting is OK.

If the values measured are outside the check value, the setting must be re-adjusted in lifted position.

Note:

With a wheel bearing housing without groove and a track rod end with ring the adjusting path towards the top is less by approx. 2 mm. If the adjusting path is not enough the ring at the track rod end must be removed.

Replacing right adjustment bolt

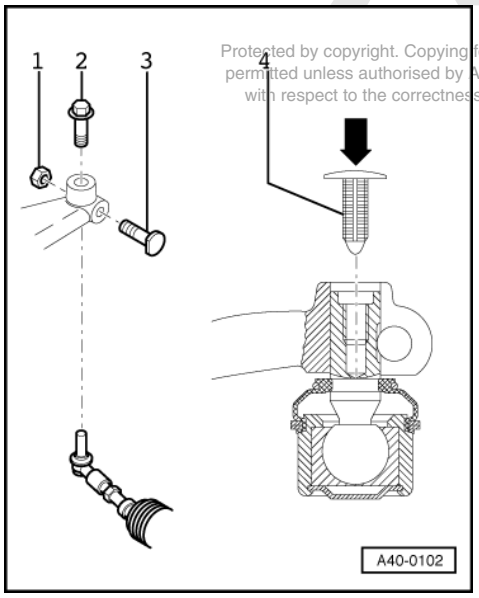

1- Self-locking nut, 50 Nm
Always replace
2 - Combi bolt
For setting toe-in curve
3 - Bolt
4 - Protective cap
Always replace

The nut -1- must be tight as otherwise the toe constant "S" would change.

- -> After adjustment of the toe constant "S" unscrew the combi bolt -2- on the right side of the vehicle.
- Fill the threaded hole with universal grease and press the protective cap -4- in place.

Vehicles which were fitted with a protective cap require installation of a new cap.

4.15 - Adjusting toe at front axle

Wheel alignment specifications => Page 212 .

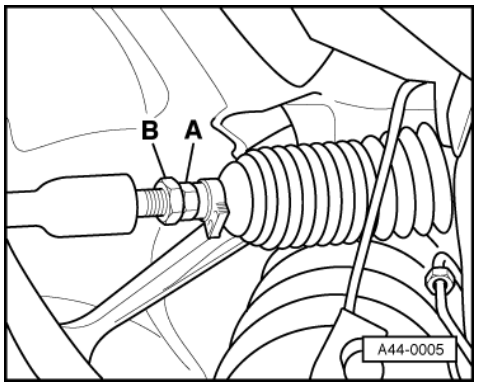

- Release lock nut -B-.
- -> Adjust toe on left and right wheels with hexagon -A-.

Ensure that the bellows are not twisted after turning track rods.

Twisted bellows become worn quickly.

- Tighten lock nut -B- to 40 Nm and check toe-in again.

After tightening lock nut -B- it is possible that the set value deviates slightly.

However, if the measured toe is within the tolerance, the adjustment is correct.

48 - Steering

1 - Contact corrosion

1.1 - Contact corrosion

Contact corrosion can occur if non-approved fasteners are used (bolts, nuts, washers etc.).

For this reason, only fastening components which have been subjected to special surface treatment (Dachromet) are used in installation. These components can be identified by their greenish surface finish.

In addition, all rubber and plastic parts and all adhesives are made of non-electrically conductive materials.

If you are not sure of the reusability of parts, always fit new parts.

Please note the following:

Always use genuine service replacement parts.

These have been tested and are compatible with aluminium.

Accessories must be approved by AUDI AG.

Damage resulting from contact corrosion is not covered by the warranty.

2 - Airbag

2.1 - Airbag

2.2 - Safety precautions when working on airbag

=> General Body Assembly, Interior; Repair group 69; Airbag safety regulations; Safety precautions when working with airbags Airbag safety regulations Safety precautions when working with airbags

2.3 - Necessary measures after servicing

After connecting the battery:

Observe the instructions:

=> Electrical System; Repair group 27; Battery; Removing and installing battery Battery Removing and installing battery

2.4 - Removing and installing driver's airbag unit on standard steering wheel

Removing and installing airbag on steering wheel.

=> General Body Assembly, Interior; Repair group 69; Servicing airbag on driver's side Servicing airbag on driver's side

2.5 - Removing driver's airbag unit on sport steering wheel

Removing and installing airbag on sports steering wheel.

=> General Body Assembly, Interior; Repair group 69

3 - Airbag steering wheel

3.1 - Airbag steering wheel

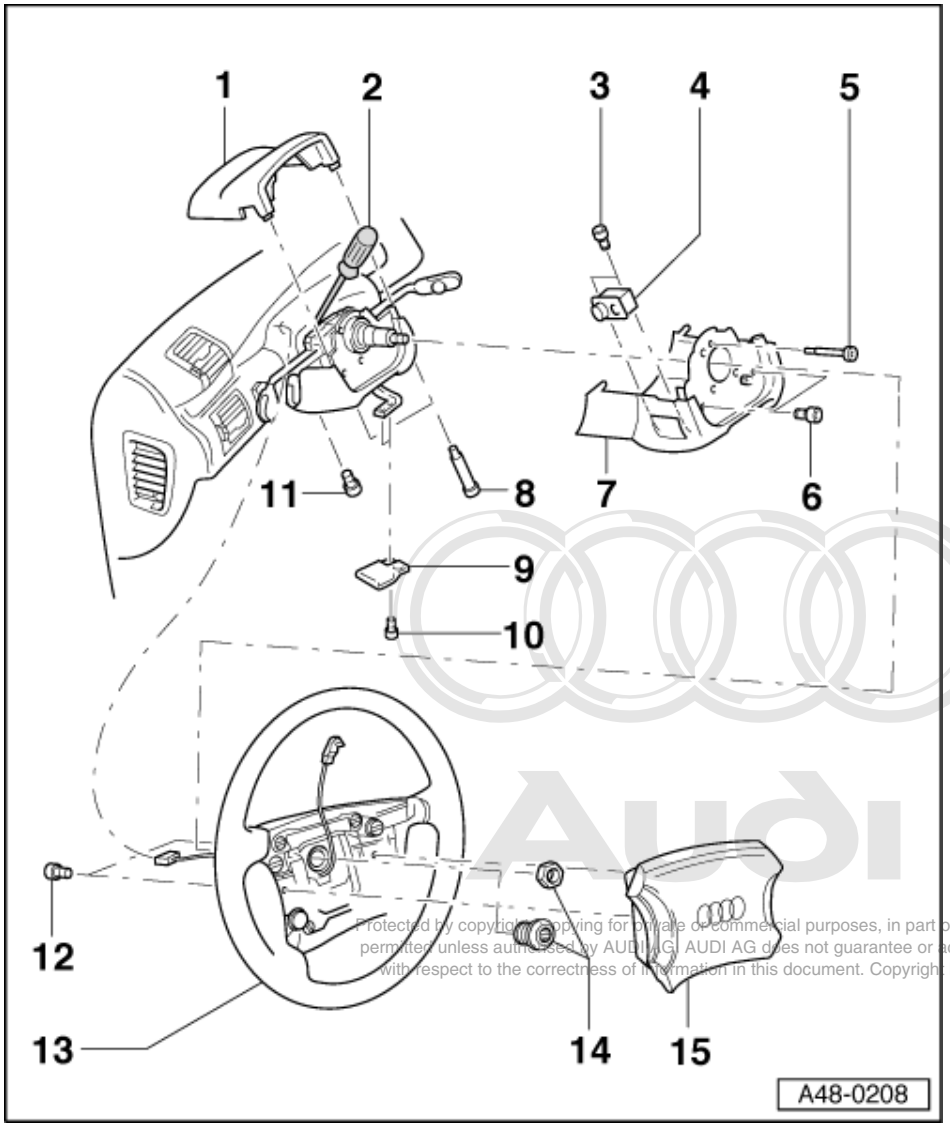

3.2 - Assembly overview: Airbag steering wheel

1 Trim
2 Clamping bolt, 5 Nm
- Open using hexagon socket- screwdriver

3 Cross-head screw, 1 Nm
4 Memory for steering column adjustment
- For electrically adjustable steering column only

5 Cross-head screw, 1 Nm
6 Cross-head screw, 1 Nm
7 Trim
8 Cross-head screw, 1 Nm

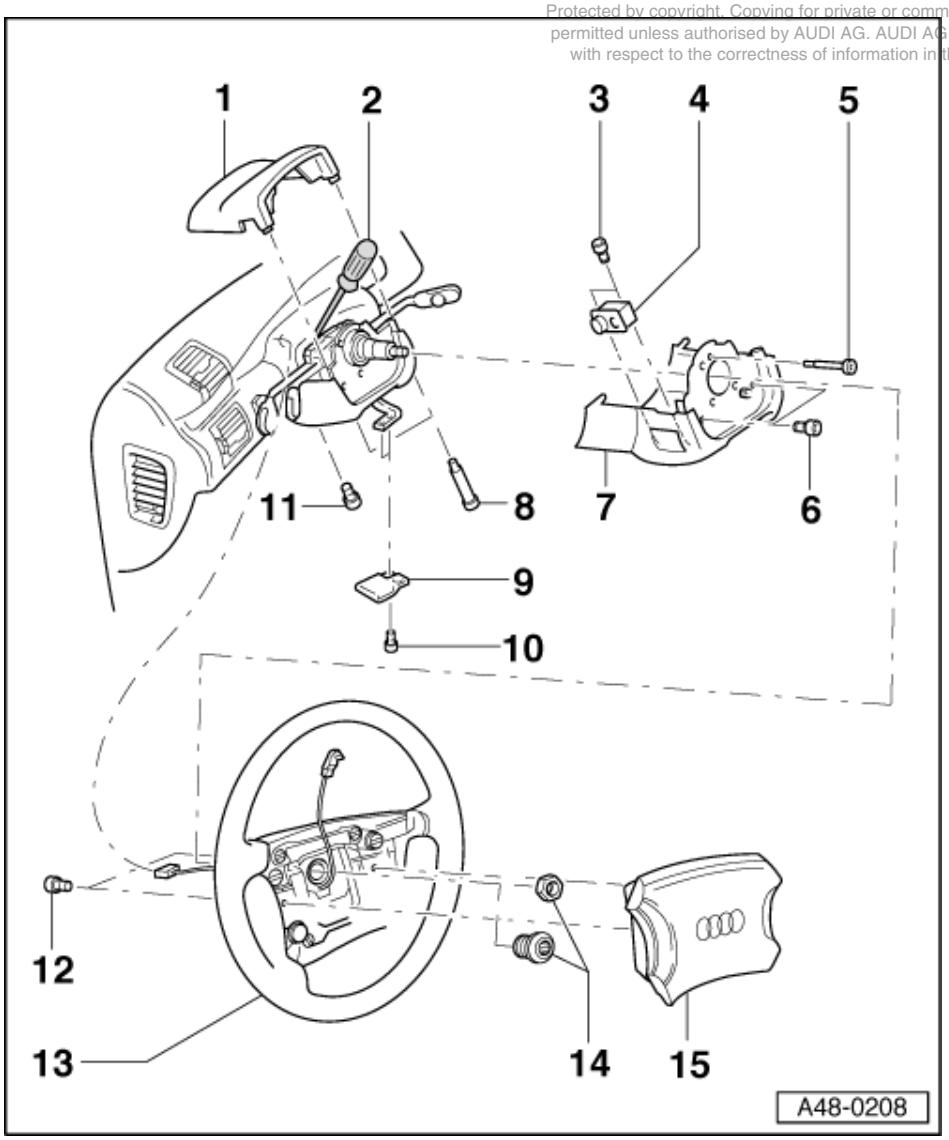

9 Handle for steering column adjustment
- For mechanically adjustable steering column only

10 Bolt, 3 Nm
- For mechanically adjustable steering column only

11 Bolt, 2.5 Nm
12 Bolt, 6 Nm
- Torx T30

13 Steering wheel

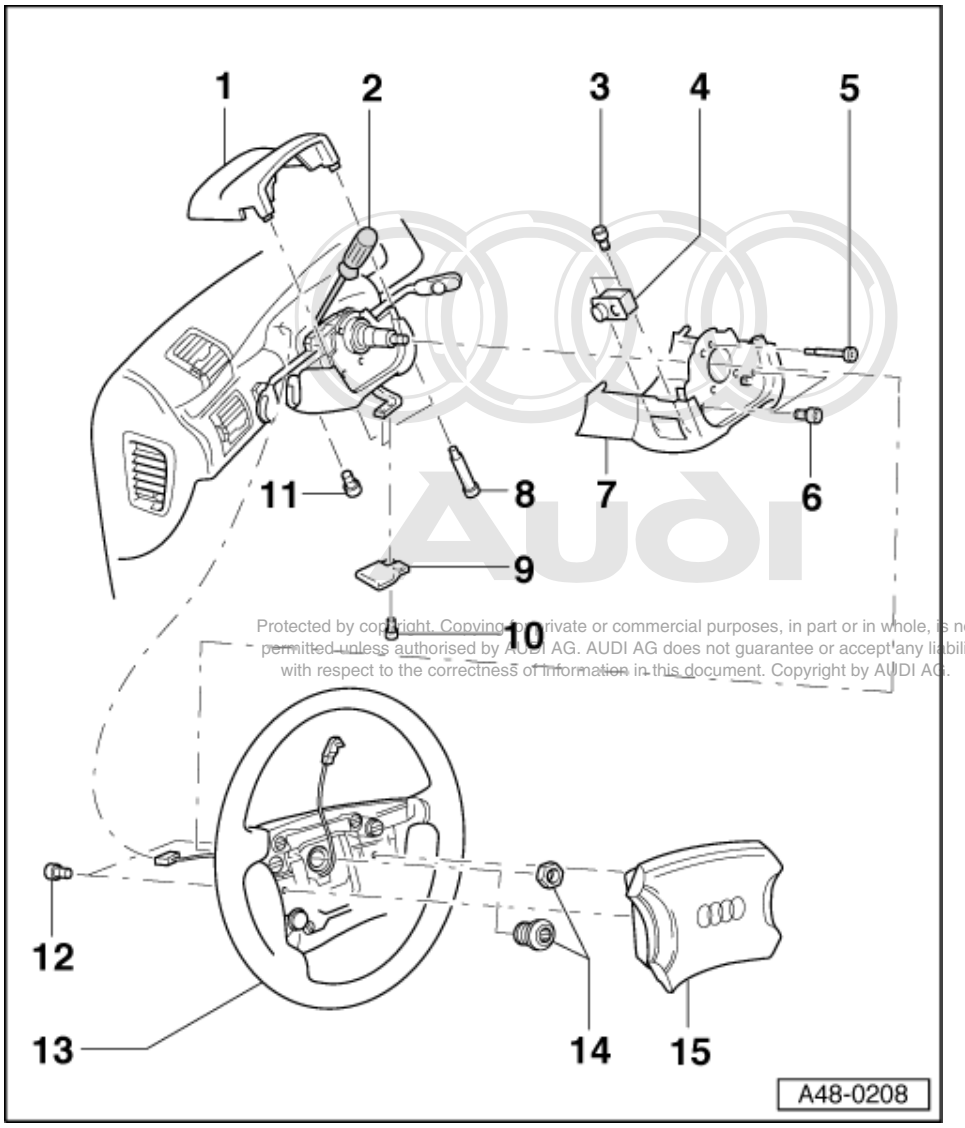

14 Hexagon nut, 40 Nm

From model year 98 onwards with multi-point socket-head bolt

- Multi-point socket-head wrench, size 12
- Tighten to 55 Nm.
- Always renew bolt.

15 Airbag unit
- Observe safety measures

=> General Body Assembly, Interior; Repair group 69

3.3 - Removing and installing steering wheel and steering column switch

Removing airbag steering wheel:

Before starting this procedure perform a readout of the airbag system fault memory.

Observe safety precautions for working with airbags => General Body Assembly, Interior; Repair group 69

Important
Before removing the steering wheel the following requirements must be met:
- **Observe the safety precautions**
- **Wheels must be in straight-ahead position.**

Non-compliance with the above may result in subsequent failure of the airbag system.

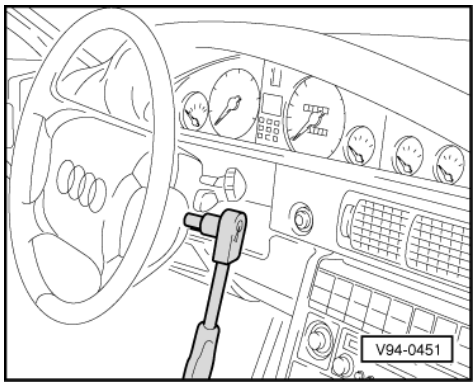

- -> Use Torx insert to unscrew airbag unit from behind on left and right of steering wheel.

Important
- **If steering wheel has been removed, coil connector in steering wheel must never be twisted.**

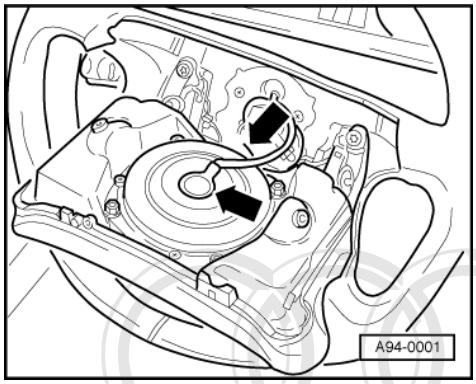

- Tilt airbag unit forwards.
- Pull connector off airbag unit.
- Remove airbag unit.
- Unscrew and detach upper steering column switch trim.
- Disconnect wire to coil connector wire at plugged coupling.
- Unscrew and remove steering wheel.

Removing steering column switch

- For mechanically adjustable steering column remove steering column adjustment handle.
- Unscrew lower steering column switch trim.

=> General Body Assembly, Interior; Repair group 68

- For electrically adjustable steering column unplug the connector from the steering column switch.
- Loosen clamping bolt at steering column switch, unplug connector, and remove steering column switch.

Upon installation, pay special attention to the following:

Before fitting steering wheel, make sure wheels are in straight ahead position.

- Fit steering wheel and tighten to 40 Nm

From model year 98 onwards with multi-point socket-head bolt

- Multi-point socket-head wrench, size 12
- Tighten to 55 Nm.
- Always renew bolt.

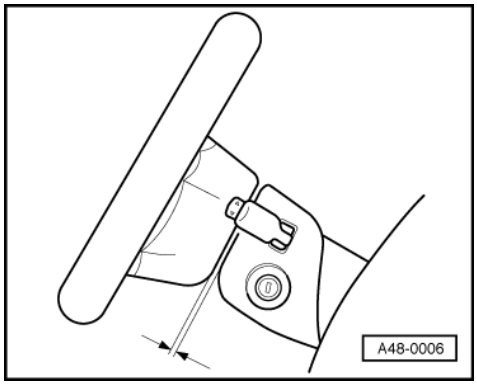

- -> Adjust the steering column switch so that a gap of 3 - 4.5 mm remains between steering wheel and steering wheel column trim.

4 - Assembly overview: Steering column

4.1 - Assembly overview: Steering column

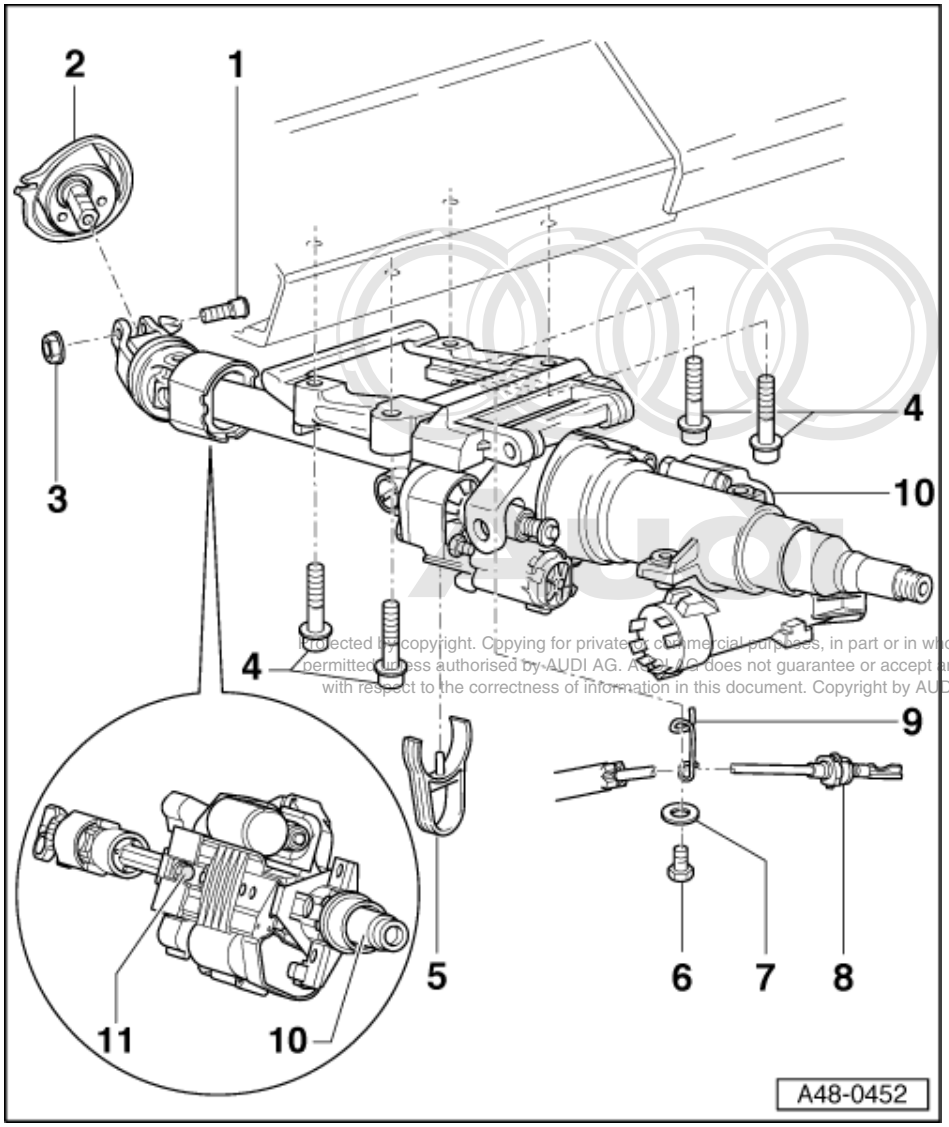

Replacement steering columns are only available as a complete unit. Repairs are not possible.

The steering lock housing can be transferred.

1 Eccentric bolt
- Turn clockwise to loosen
- Turn counter-clockwise to tighten

2 Power-assisted steering box

3 Self-locking nut, 30 Nm
- Always replace

4 Combi bolt, 20 Nm

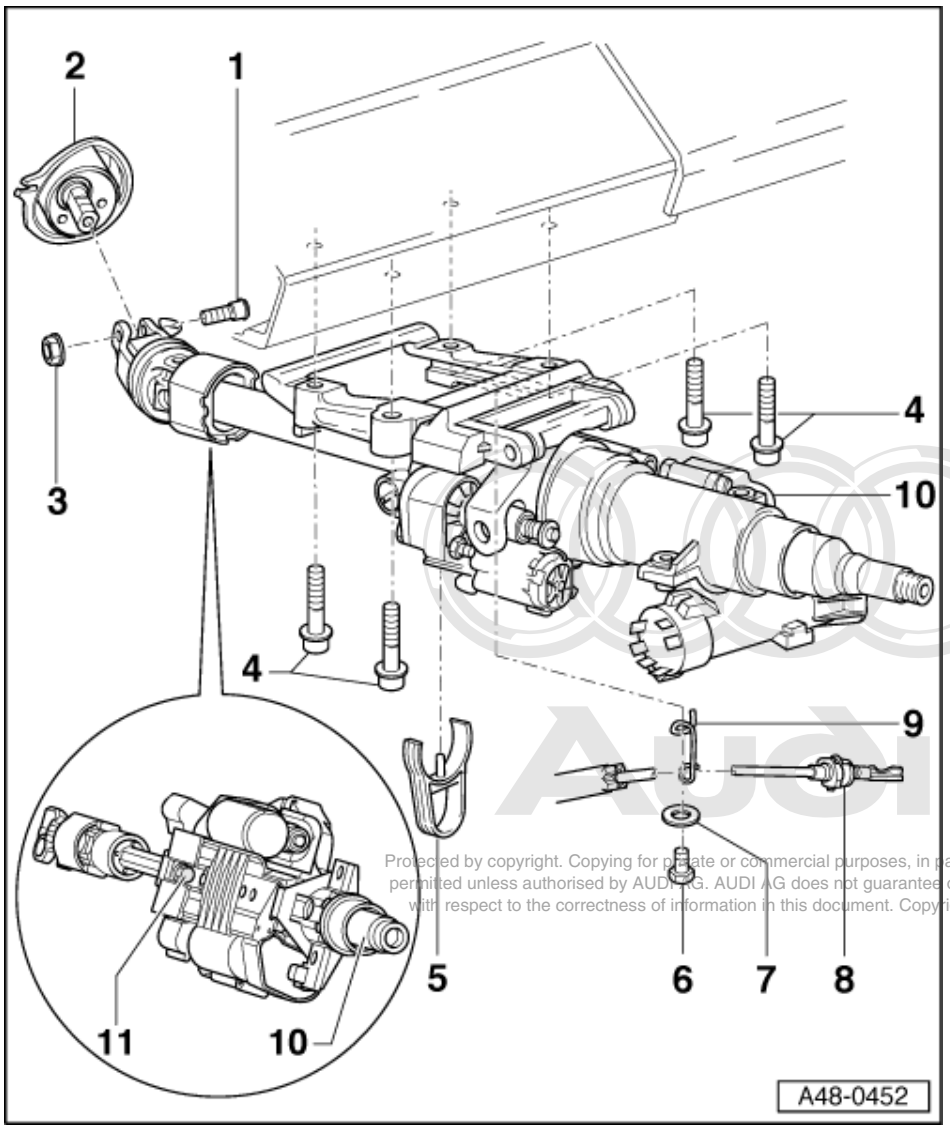

5 Transport lock
- Note design changes => Fig. 1
- If removing and installing a steering column secure the mesh section against separation => Fig. 1
- Remove after steering column has been installed

6 Hexagon bolt, 7 Nm
- Vehicles with automatic gearbox only

7 Washer
- Vehicles with automatic gearbox only

8 Selector lever lock cable
- Vehicles with automatic gearbox only

9 Bracket
- Vehicles with automatic gearbox only

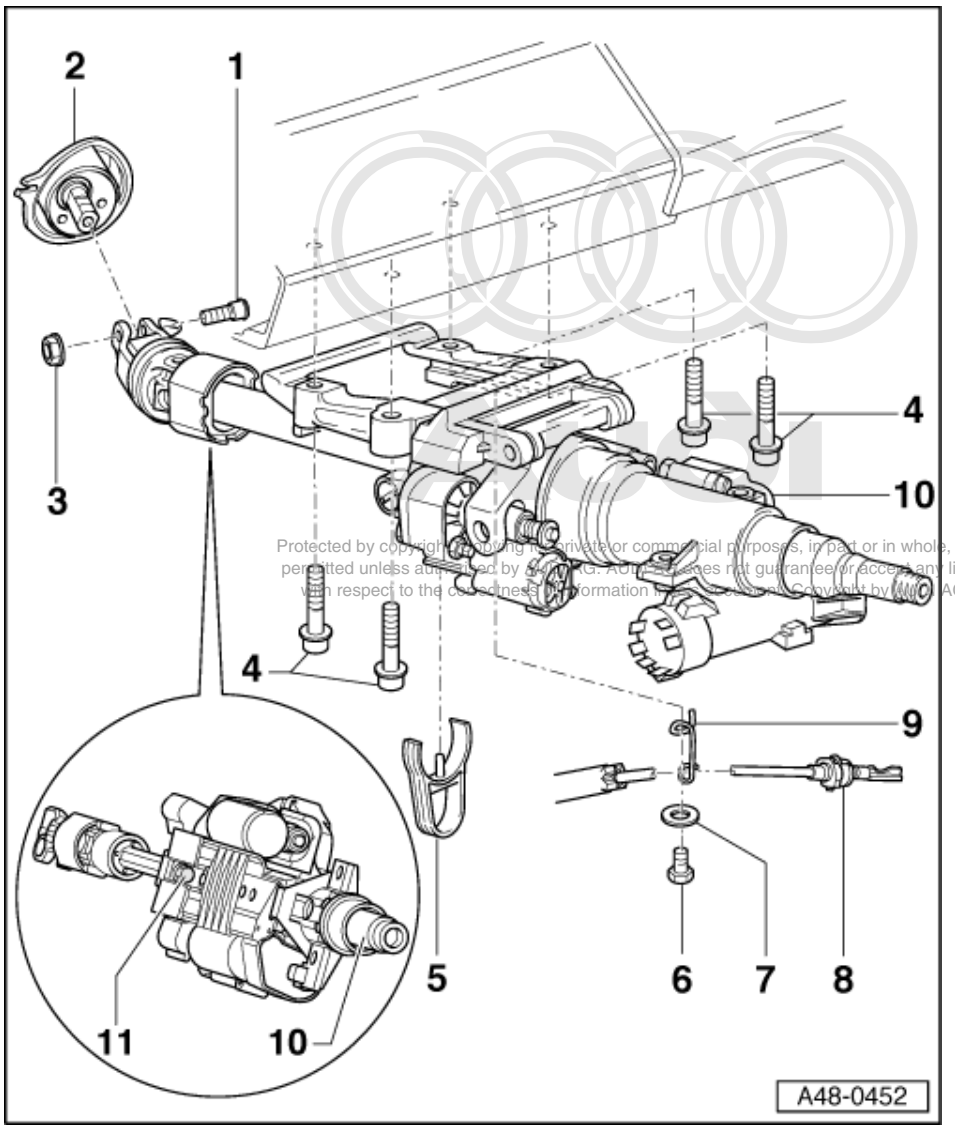

10 Steering column

- Mechanically or electrically adjustable
- Illustration shows electrically adjustable steering column
- On vehicles with Electronic Stability- Program up to approx. 10.98 (ESP) a sender for steering angle is installed => Fig. 2
- In case of faulty electric motors or steering angle sender (ESP) the steering column must be replaced as a complete unit.

Note:

Never detach mesh section between top and bottom part of steering column.

Movement beyond a range of ± 5 cm can lead to damage to the steering column.

To avoid damage, note => Fig. 1 .

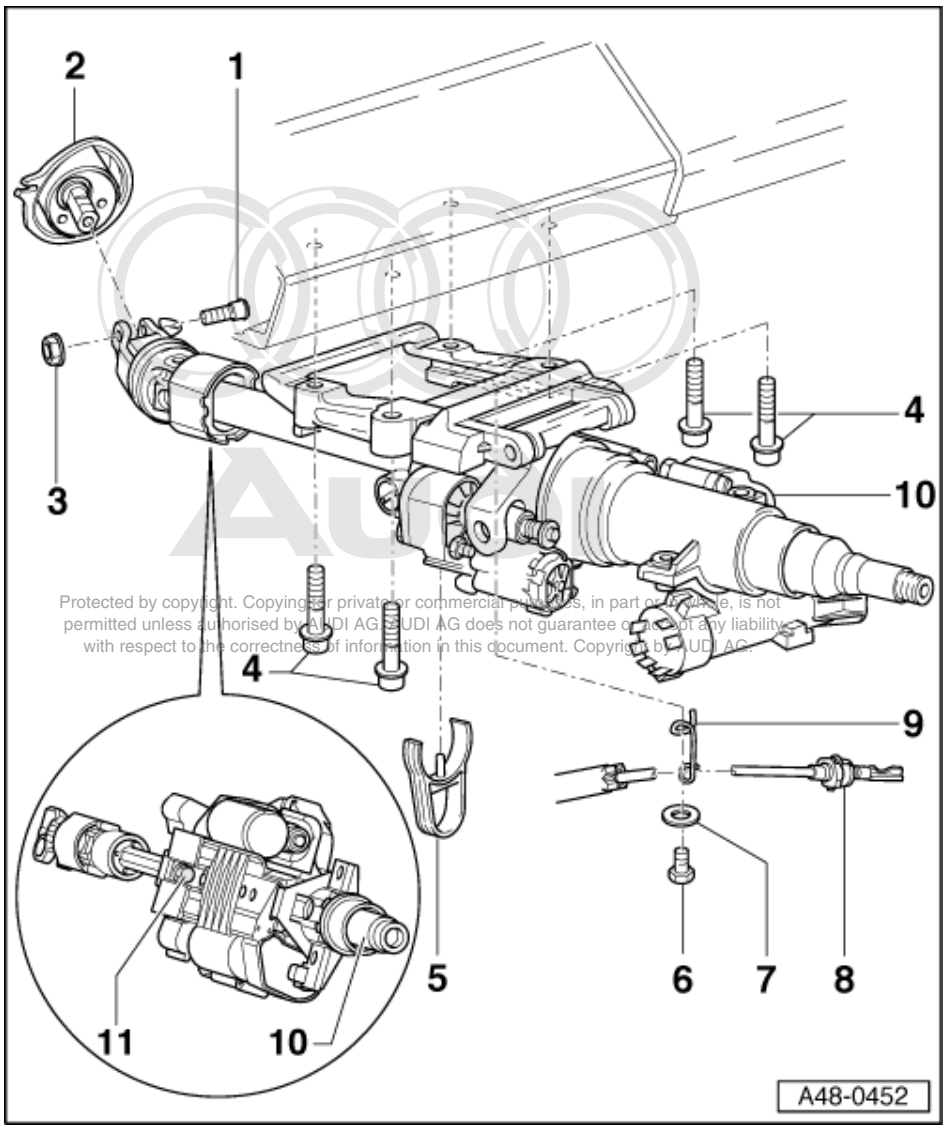

11 Tolerance compensation screw

Tightening torque: 22 Nm

- Is only fitted in electrically adjustable steering column
- Before tightening the tolerance compensation screw, all the 4 bolts for fastening the steering column to the mounting crossmember must be tightened to torque.
- No force must be applied to the steering column or steering wheel while the tolerance compensation screw is being tightened.

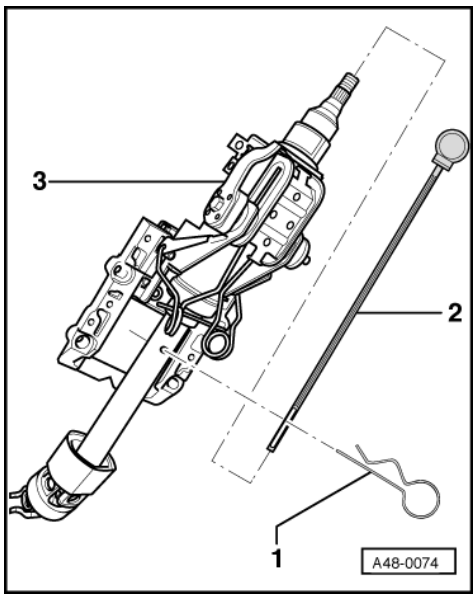

-> Fig.1 Steering column transport lock

1 - Securing clip
2 - Plastic rod
3 - Steering column

An assembly safety guard is required to stop the upper and lower sections of the steering column pulling apart when detaching steering box.

If upper and lower part of steering column are pulled apart too far or are pushed inside each other the splines are separated.

This may lead to rattling noises during subsequent operation if the mesh section is not in its original installation position.

New replacement steering columns are fitted with a transport safeguard.

This transport safeguard must be removed after installing the steering column in the vehicle.

It is recommended that these parts be kept. They can be used for removing the steering column.

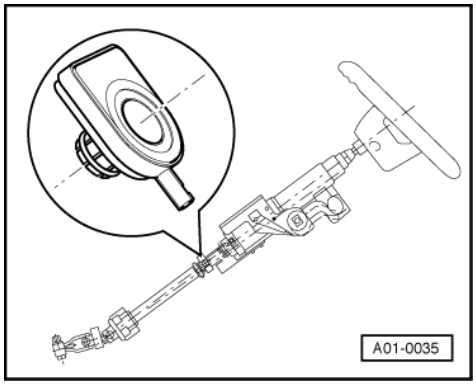

-> Fig.2 Steering angle sender -G85 for ESP

The sender for steering angle is pushed over the steering column shaft.

Repair is by replacing the steering column.

A so-called "zero position compensation" of this sender is required if:

- The control unit -J104, the sender for steering angle -G85 or the steering column are replaced.
- Settings of the running gear were altered as part of wheel alignment.
- If the fault table requires zero position compensation if the fault has been entered into the fault memory of the control unit -J104.

Performing zero position compensation

=> Running Gear Self-diagnosis for ABS, ESP; Repair group 01; Basic setting Basic setting

4.2 - Checking steering column for damage

Visual inspection

- Check if parts of steering column are damaged.

Functional test

- Check whether the steering column can be rotated easily and without catching.
- Check that steering column can be adjusted both longitudinally and in height.

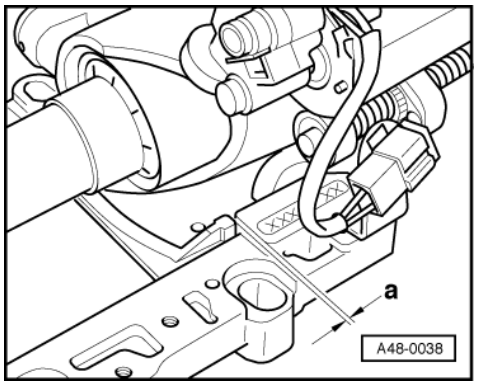

- -> Check gap -dimension A- between slide and mounting bracket.
  Dimension a; maximum 0.5 mm or smaller
- If dimension is -a- greater than 0.5 mm, the steering column is damaged and must be replaced.

4.3 - Removing and installing steering column

Removing

- Remove airbag steering wheel and steering column switch, from => Page 230 .

Observe safety precautions for working with airbags => General Body Assembly, Interior; Repair group 69

Important
Before removing the steering wheel the following requirements must be met:
- **Observe the safety precautions**
- **Wheels must be in straight-ahead position.**

Non-compliance with the above may result in subsequent failure of the airbag system.

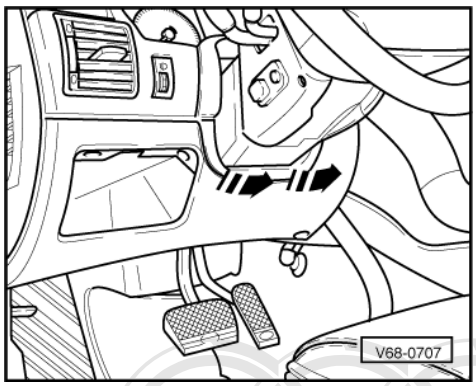

- -> Lever off lower surround -arrows-.

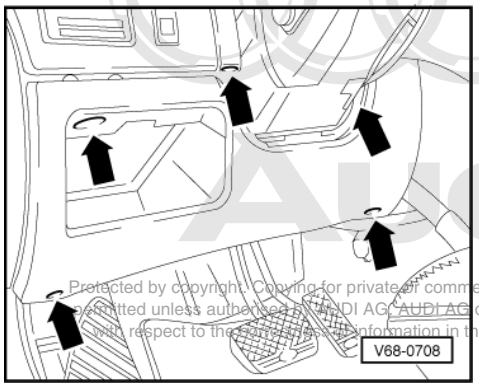

- -> Unscrew cover -arrows-.

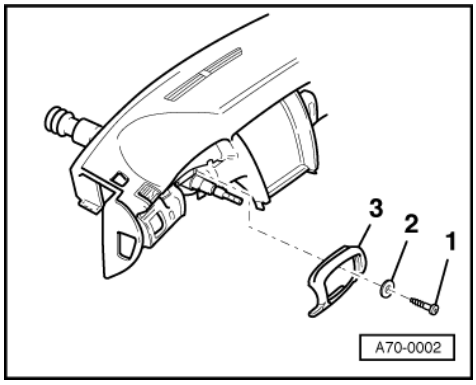

- -> Unscrew bolts -1- (2x).
- Remove trim -3-.

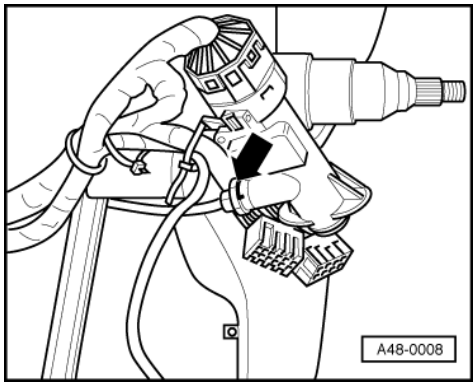

- -> Release cable ties and plugs on steering column.
- On vehicles with automatic gearbox, detach safety guard at selector lever lock cable (arrow). Turn ignition key and detach cable.

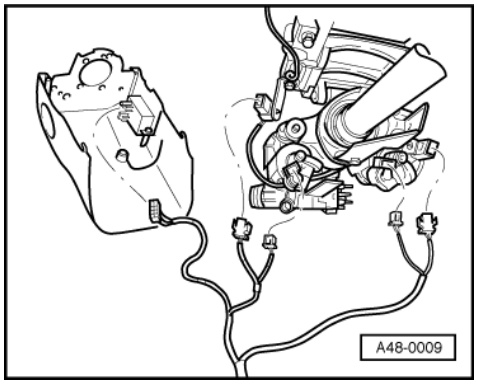

- -> For electrically adjustable steering column, unplug the connector from the servo motors.

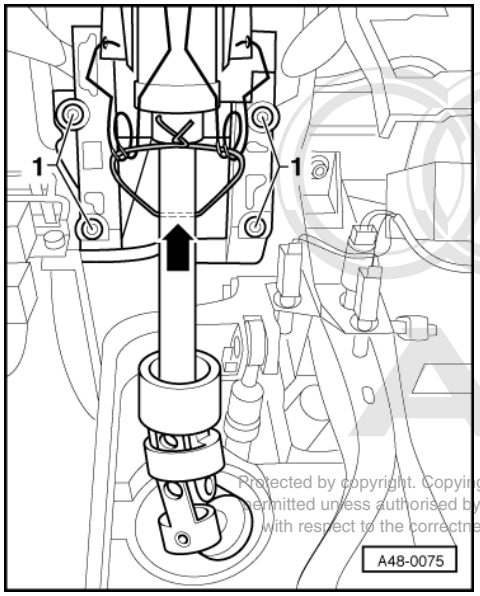

Steering column, securing before removal

The illustration shows an example for a mechanically adjustable steering column

- -> Pull wire through bore in lower section of steering column -arrow- and spring.

An assembly safety guard is required to stop the upper and lower sections of the steering column pulling apart when detaching steering box.

If upper and lower part of steering column are pulled apart too far or are pushed inside each other the splines are separated.

This may lead to rattling noises during subsequent operation if the mesh section is not in its original installation position.

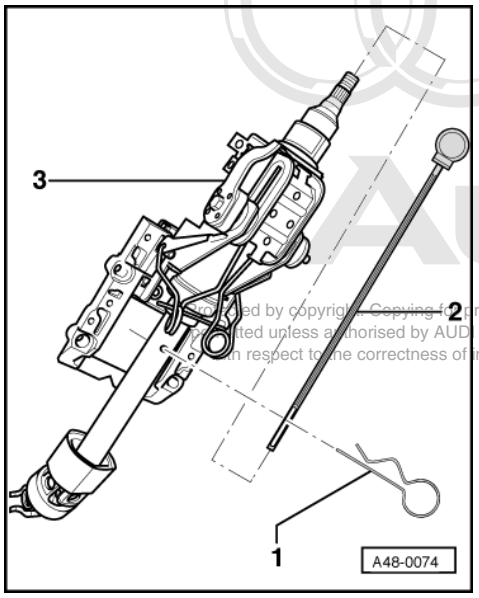

-> The steering column can also be secured with a transport safeguard:

1 - Securing clip
2 - Plastic rod
3 - Steering column

New replacement steering columns are fitted with a transport safeguard.

This transport safeguard must be removed after installing the steering column in the vehicle .

It is recommended that these parts be kept. They can be used for removing the steering column.

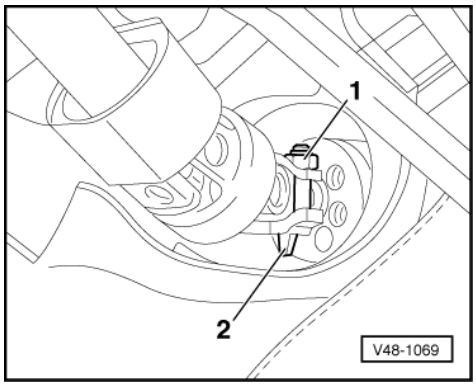

- -> Unscrew nut -1- at universal joint.
- Relieve tension on eccentric by turning tensioning bolt clockwise and remove bolt.

Note:

As a result of design improvements, safety guard -2- is discontinued.

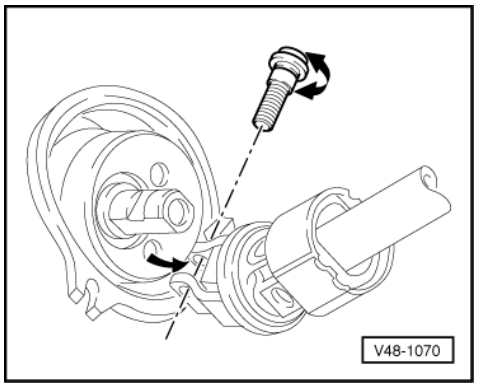

- -> Swivel the universal joint downwards out of the way.

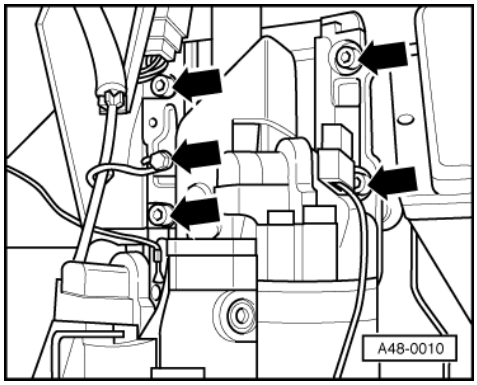

- -> On vehicles with automatic gearbox, unscrew retainer (steel wire clip) for selector lever lock cable.
- Unscrew steering column hexagon socket-head bolts and remove steering column.

When installing, pay special attention to the following:

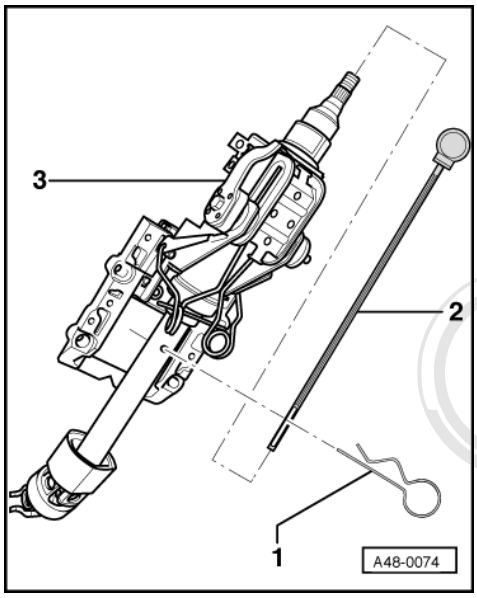

New replacement steering columns are fitted with a transport safeguard.

This transport safeguard must be removed after installing the steering column in the vehicle :

1 - Securing clip
2 - Plastic rod

3 - Steering column

It is recommended that these parts be kept. They can be used for removing the steering column.

Align the steering column free of tension to the steering rack pinion:

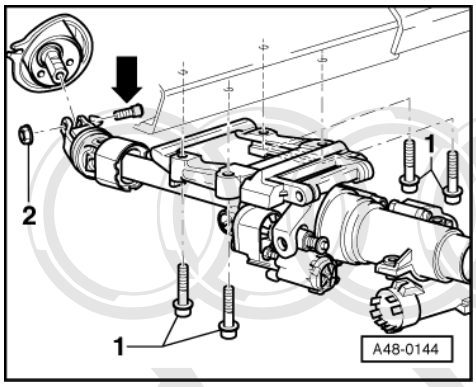

- -> Attach steering column to crossmember with 4 hexagon socket-head bolts -1-.
- Attach universal joint to steering box pinion.
- Insert clamping bolt through lower section and pre-tension by turning counter-clockwise.
- Fit hexagon nut -2- and tighten to 40 Nm.
- Remove wire/transport safeguard between upper and lower sections of steering column.
- On vehicles with automatic gearbox attach selector lever lock cable to ignition lock.
- For electrically adjustable steering column, plug in the connectors to the servo motors.
- Fasten electrical wiring to steering column using cable ties.
- Attach upper surround.
- Install lower steering column switch and steering column trim

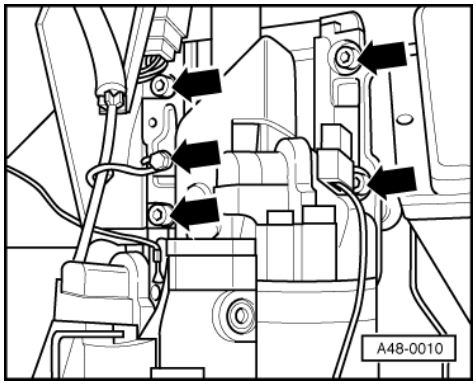

- Centre upper surround to steering column and steering column trim.
- -> Tighten hexagon socket-head bolts on steering column to 22 Nm in a diagonal sequence.

Vehicles with electrically adjustable steering column only:

- Tighten tolerance compensation screw =>Page 236 ,Fig. 11 .

Continued for all vehicles

- Install driver's side glove compartment.

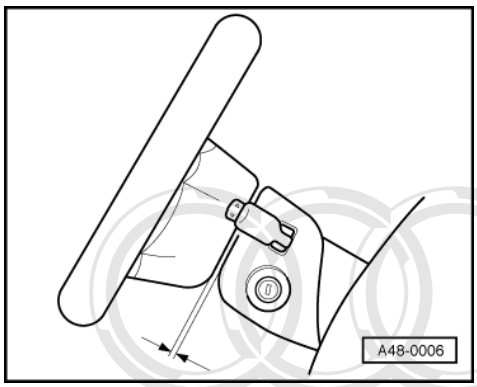

Before fitting steering wheel, make sure wheels are in straight ahead position.

- Fit steering wheel and tighten to 40 Nm

From model year 98 onwards with multi-point socket-head bolt

- Multi-point socket-head wrench, size 12
- Tighten to 55 Nm.
- Always renew bolt.

- -> Adjust the steering column switch so that a gap of 3 - 4.5 mm remains between steering wheel and steering wheel column trim.
- Install airbag unit => Page 230

Observe safety precautions for working with airbags => General Body Assembly, Interior; Repair group 69

4.4 - Removing and installing ignition lock housing

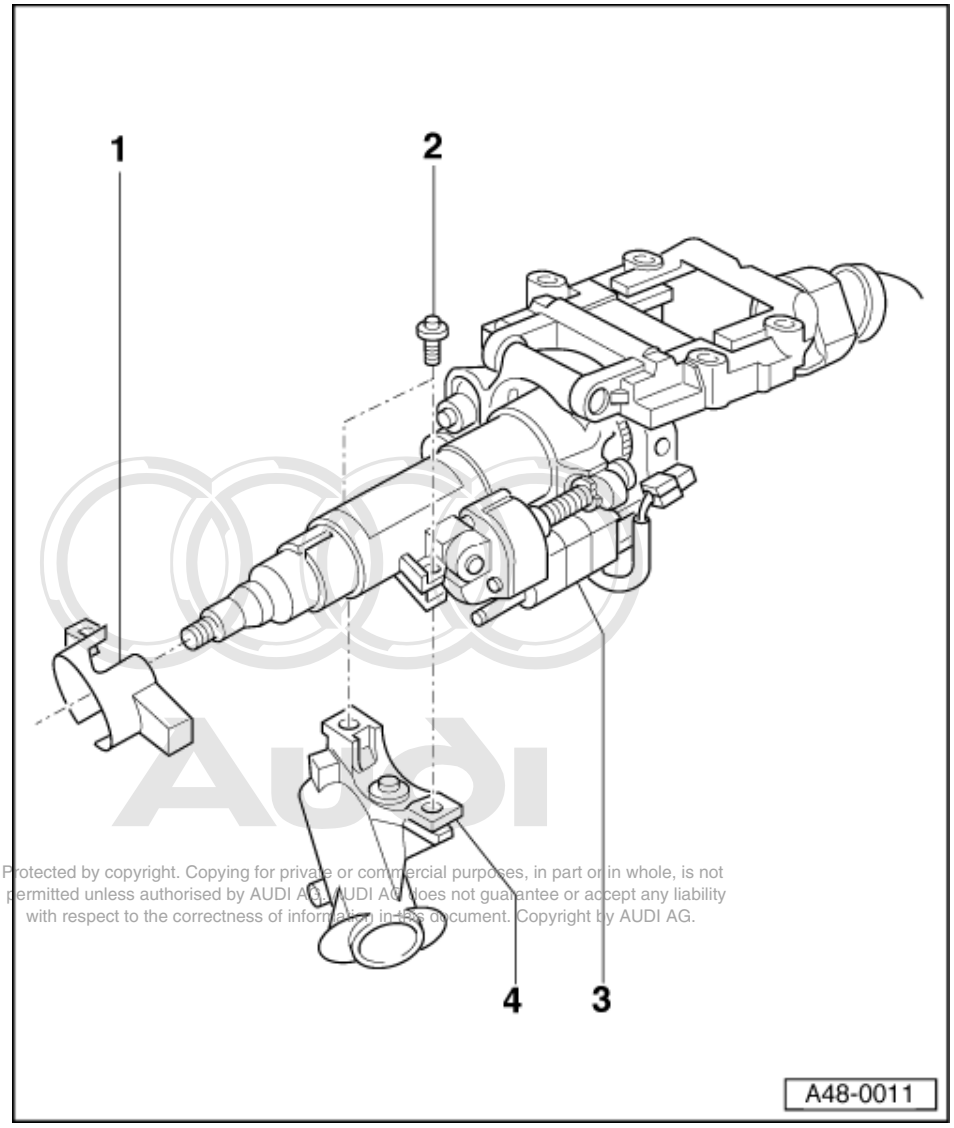

1 Cover
2 Shear bolts
- Tighten until head shears off
- Drilling out or chiselling out => Fig. 1

3 Steering column
- Mechanically or electrically adjustable
- Illustration shows electrically adjustable steering column

4 Ignition lock housing

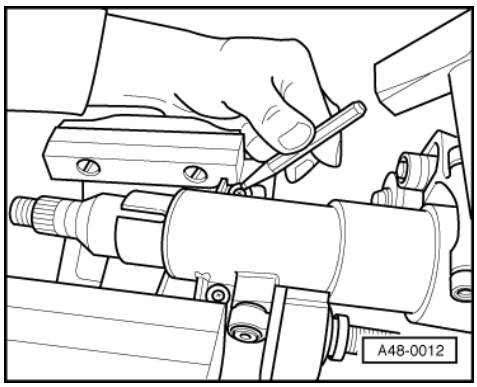

-> Fig.1 Chiselling out shear bolts

Note:

To chisel out theshear bolts, the steering column must first be clamped in a vice as shown.

Steering column mounting bracket will be damaged if work is performed with the steering column fitted.

5 - Electrically adjustable steering column

5.1 - Electrically adjustable steering column

Note the illustration on => Page 233

An electrically adjustable steering column is available as optional equipment.

The -J352 control unit has no self-diagnosis capability

In case of a complaint, troubleshooting must occur according to the wiring diagrams.

5.2 - Description of function:

Automatic adjustment causes simultaneous adjustment of seatbelt and steering column (height/depth).

Safety functions:

To avoid overloading the vehicle battery, automatic adjustment does not engage the servo motors simultaneously, but in sequence instead.

Once voltage goes below 10.5 V, the motors are adjusted individually one after the other.

Lock detection (1.5 sec) and runtime error (max. 30 sec per motor) immediately switch off the relevant motor.

Ingress aid (steering column adjustment)

To aid egress and ingress for the driver, the steering column tilt and telescoping adjustment is moved all the way to the stop when opening the S - contact (ignition off) and set back to the original position when closing the S - contact (ignition on).

Turning the ingress aid switch off completely deactivates the ingress aid function and the current retracting process is aborted immediately.

Special features

If a P - button is pressed and the S - contact is off, then only the belt height is adjusted. The steering column only adjusts to the memory position if "S - contact on" is actuated.

The steering column is not adjusted back upon "S - contact on" signal if the entry position has been changed beforehand e.g. manually.

5.3 - Steering column and belt height adjustment control unit -J352

Fitting location:

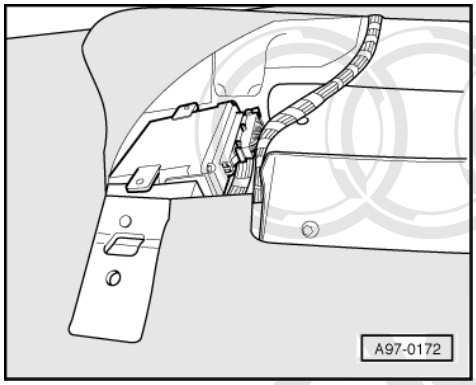

Under driver's seat beneath rear seat carpet

5.4 - Electrical adjustment

Using switch -A-, the steering column can be electrically adjusted both longitudinally and in height. Adjustment also works if the ignition is switched off.

Height adjustment:

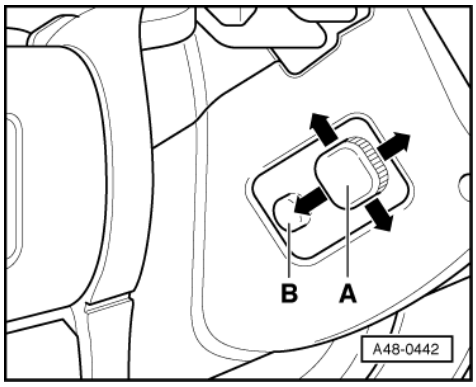

- -> Press switch upwards or downwards.

The height is adjusted for as long as the switch is pressed.

Longitudinal adjustment:

- Press switch in forward or rearward direction, respectively.

The height is adjusted for as long as the switch is pressed.

Memory for steering column adjustment:

On vehicles with seat memory, the respective adjustment can be saved together with the seat position.

Ingress aid:

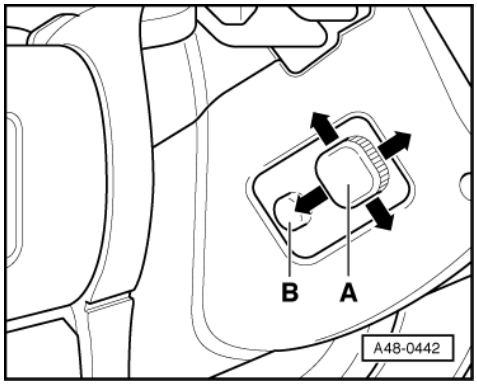

The ingress aid makes entering and exiting the vehicle easier by adjusting the steering column.

- -> By pressing the button -B- the ingress aid can be switched off.

With ingress aid switched on (button -B- pressed), the steering column moves to the park position when the ignition key is removed (retracts forwards and upwards).

After entering the vehicle, the steering column moves to the memorised position, as soon as the vehicle key is turned to switch on the ignition.

The seat memory button must be in the "ON" position (pressed) so that the memorised steering column position is retrieved.

If the ingress aid is switched off, the steering column moves to the memorised position as soon as the seat memory button is operated.

6 - Assembly overview: Power assisted steering box, LHD vehicles

6.1 - Assembly overview: Power assisted steering box, LHD vehicles

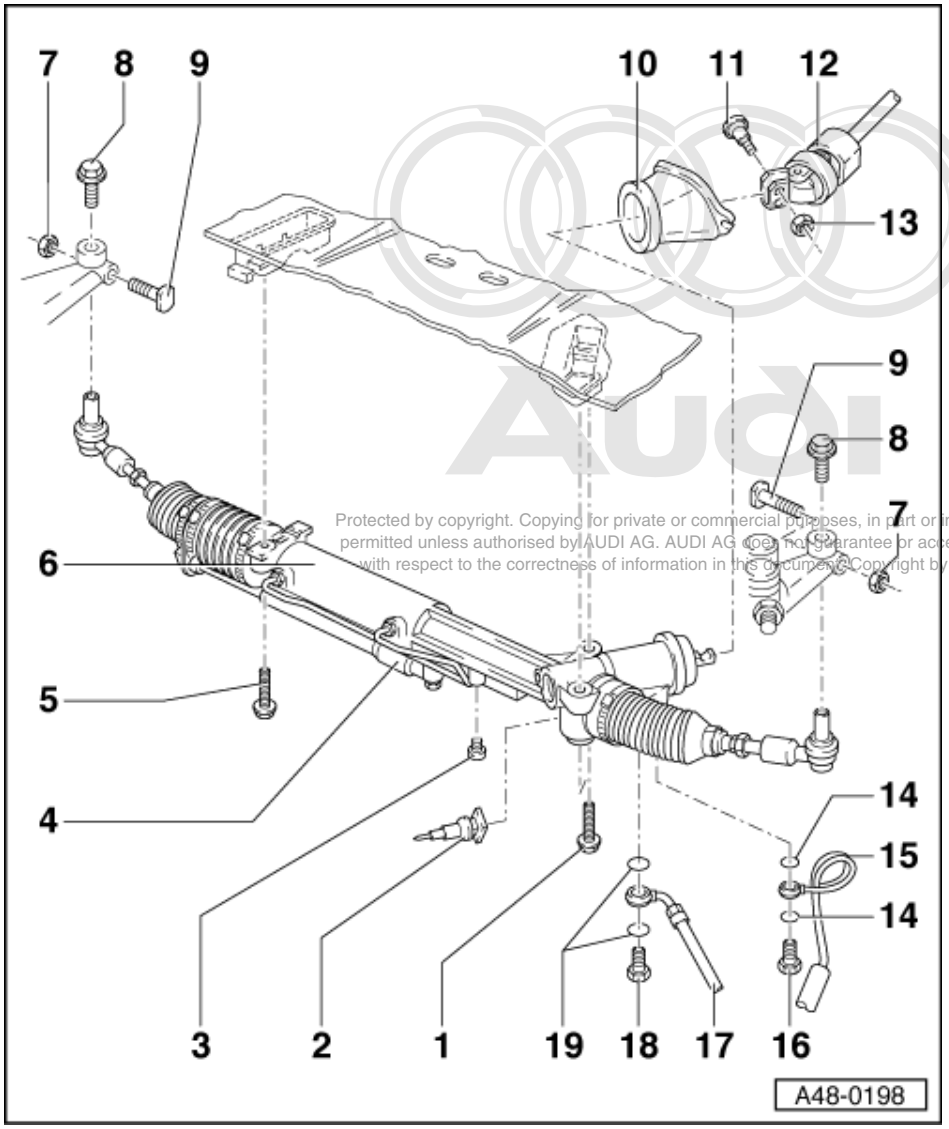

The power assisted steering box is removed and installed complete with track rods and steering damper.

1 Combi bolt, 70 Nm

- In vehicles with V6 TDI- engines, it is only possible to unscrew the bolt following removal of the heat shields => Page 261 and the left engine compartment.

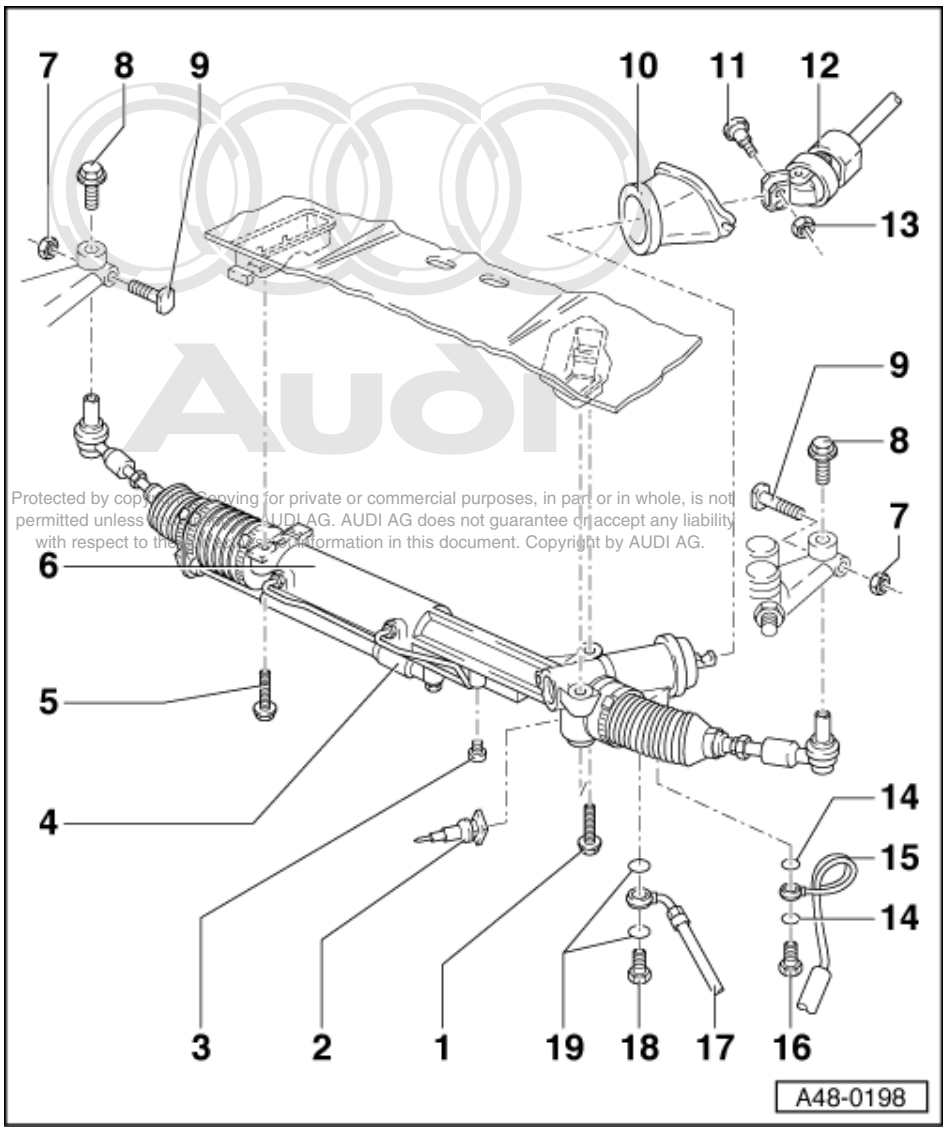

2 Connector for Servotronic

- Different versions
- To aid in installation and removal of the steering box on vehicles with Servotronic, the Servotronic-valve -N119 was equipped with a wire of approx. 80 cm length. The electrical connection for this wire is no longer equipped with a square plug but with a round plug instead.
- When replacing the Servotronic steering box the Servotronic valve may need to be replaced according to the type of plug used.

3 Cheese-head bolt, 12 Nm

- Screw plug for steering centring
  => Fig. 1 and 2

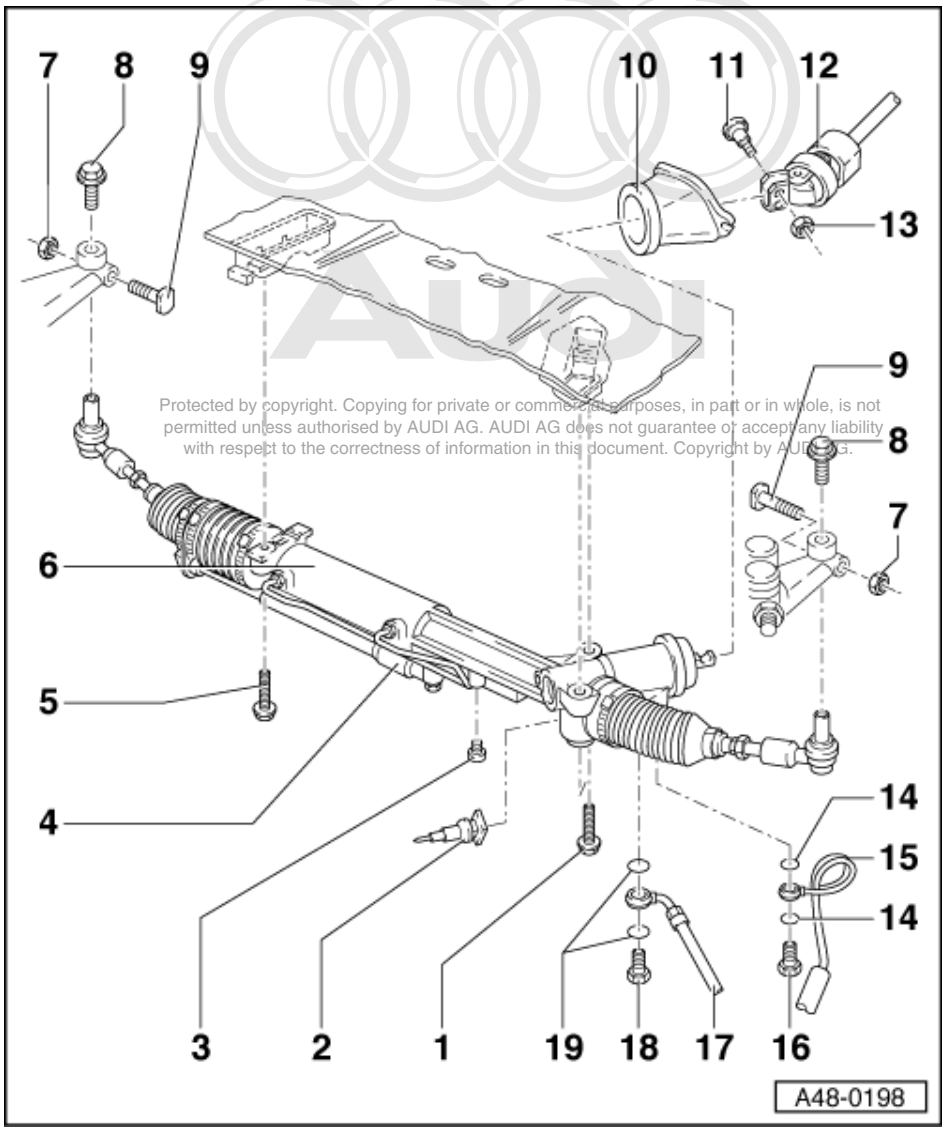

4 Steering damper
- Heat shield for petrol engines =>Page 337 , Item 30 .

5 Combi bolt, 70 Nm

6 Power-assisted steering box with track rods
- Servicing => Page 293
- Removing and installing:
- Petrol engine => Page 255
- V6 TDI engine => Page 264
- In vehicles with V6 TDI- engines, removal is only possible to unscrew the bolt following removal of the heat shields => Page 261 and the engine compartments.
- Repair solution for the right engine compartment cover => Page 354
- Assembly overview:
- Right-hand drive => Page 298

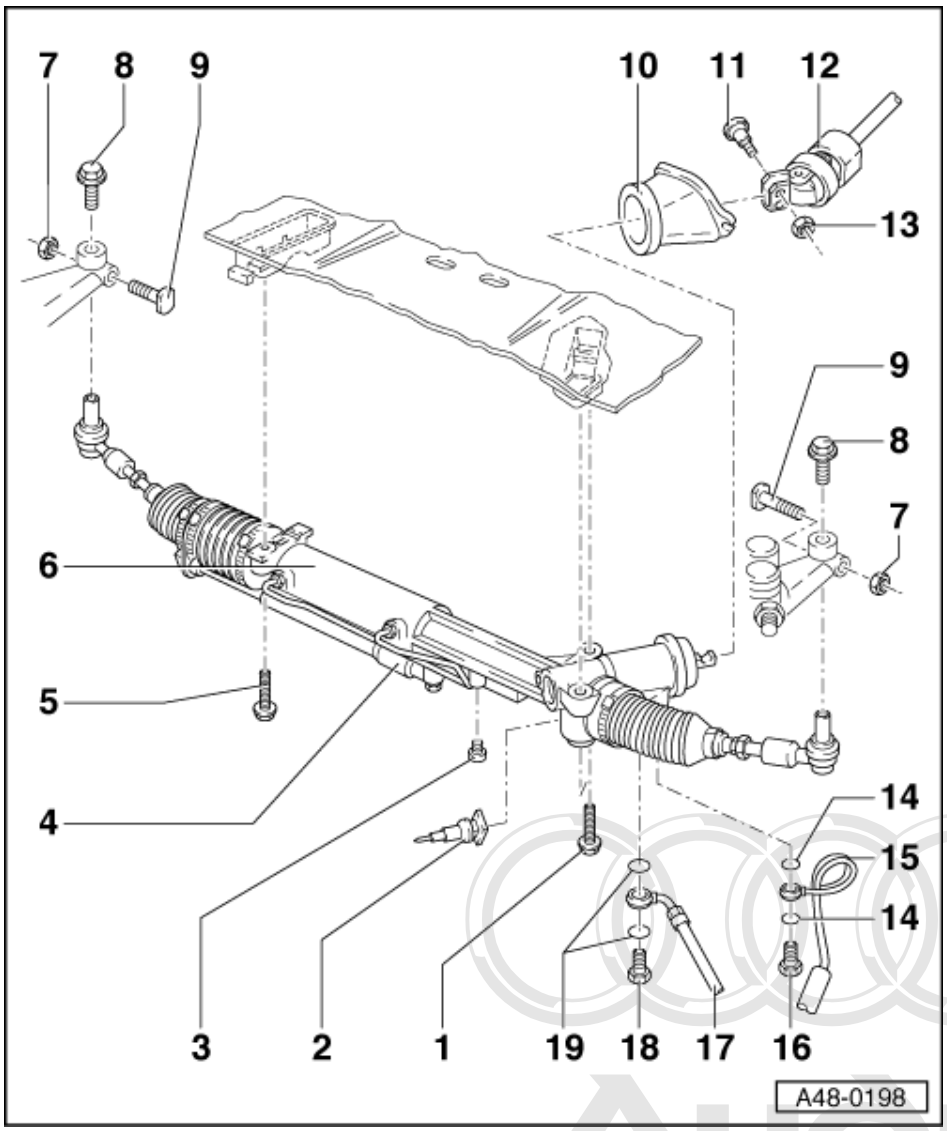

7 Self-locking nut, 50 Nm
- Always replace

8 Combi bolt, 7 Nm
- For setting toe-in curve => Page 212

9 Bolt

10 Sealing boot
- Check for cracks and abrasion

11 Eccentric bolt
- Turn clockwise to loosen
- Turn counter-clockwise to tighten

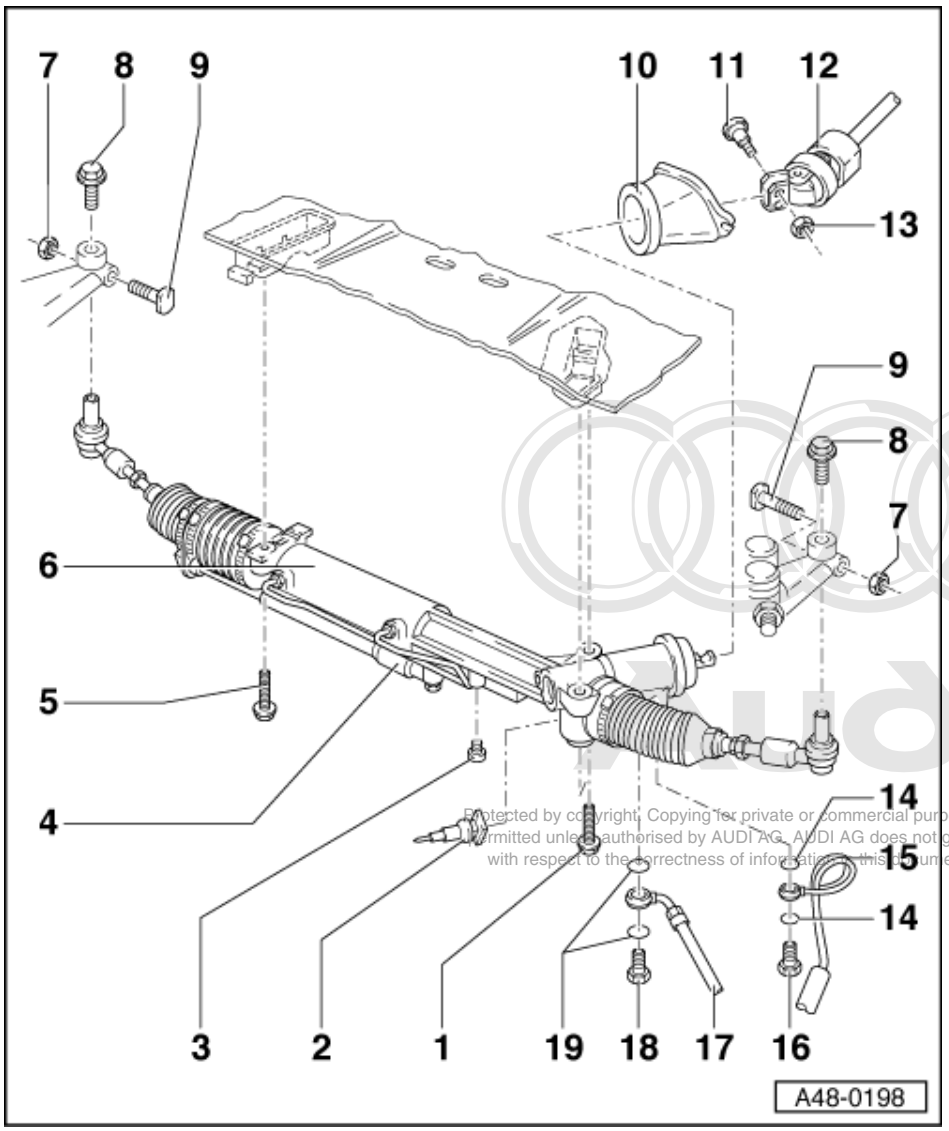

12 Steering column

Note:

Never detach mesh section between top and bottom part of steering column.

Movement beyond a range of ± 5 cm can lead to damage to the steering column.

To avoid damage, please note Fig. 237 .

13 Self-locking nut, 40 Nm
- Always replace

14 Sealing ring
- Always replace

15 Expansion hose

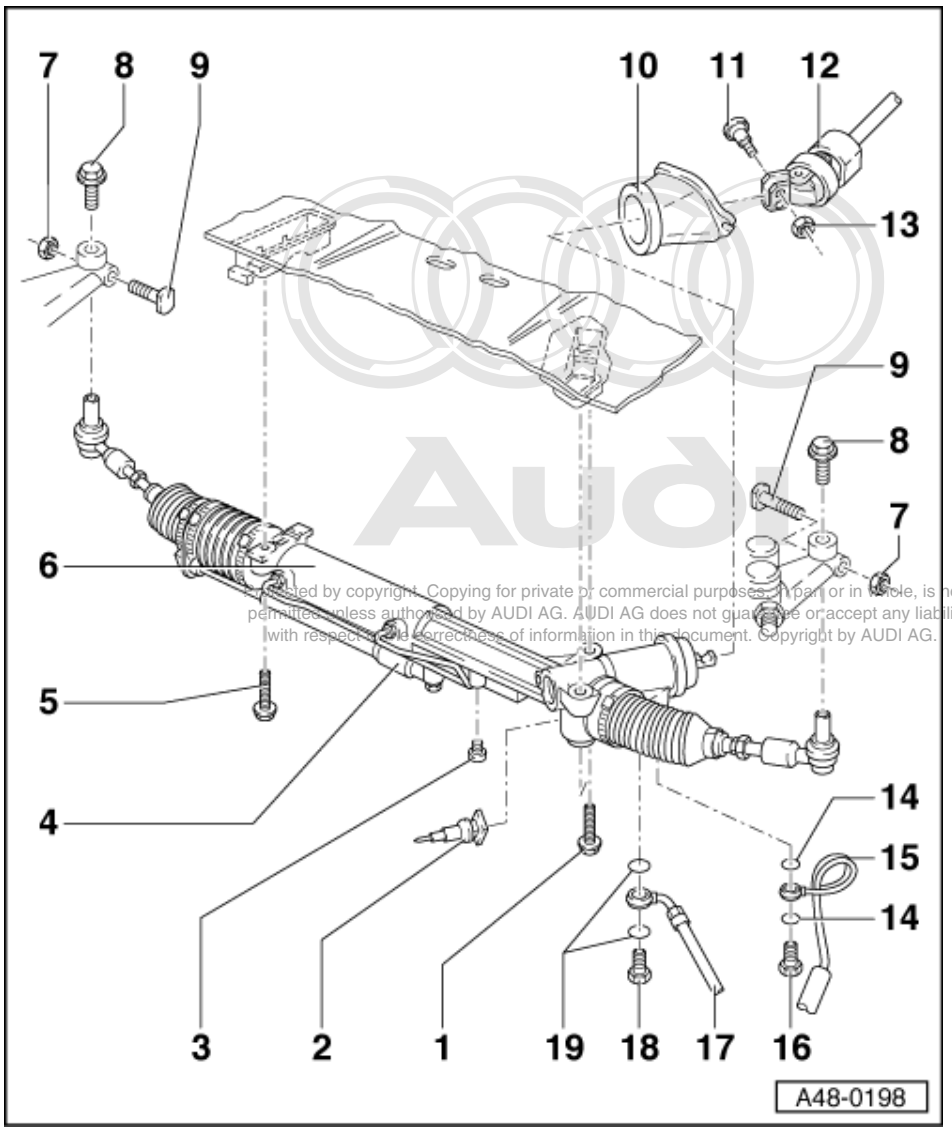

16 Banjo bolt, 40 Nm
- With integrated non-return valve

17 Return hose

18 Banjo bolt, 47 Nm

19 Sealing ring
- Always replace

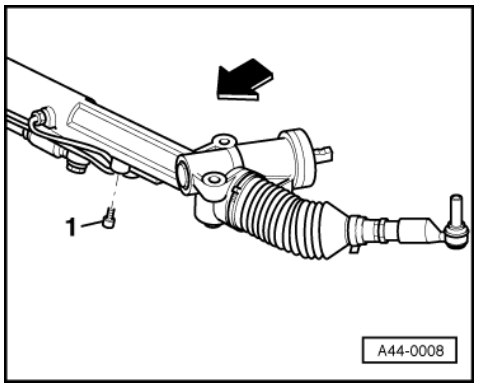

-> Fig.1 Screw plug for steering centring

Arrow points in direction of travel

1 - Screw plug for steering centring, 12 Nm.

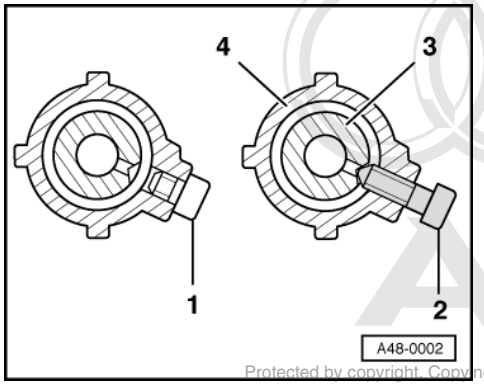

-> Fig.2 Steering centring:

Steering box in cutaway view:

1 - Screw plug, 12 Nm.
2 - Workshop equipment -V.A.G 1907- to be screwed in by hand as far as possible
3 - Rack
4 - Steering box housing

- Move the steering wheel slightly to the left and right of centre position.
- A second mechanic turns the -V.A.G 1907- into the steering box until engagement of the centring hole can be felt.

6.2 - Removing and installing power-assisted steering box for LHD vehicles with petrol engine

Removing

- Disconnect battery.

=> Electrical System; Repair group 27; Battery Battery

Important Bring steering wheel to centre position and do not turn whilst performing repair work, as otherwise coil connector of airbag unit could be damaged.

- Remove ignition key with steering wheel centred.

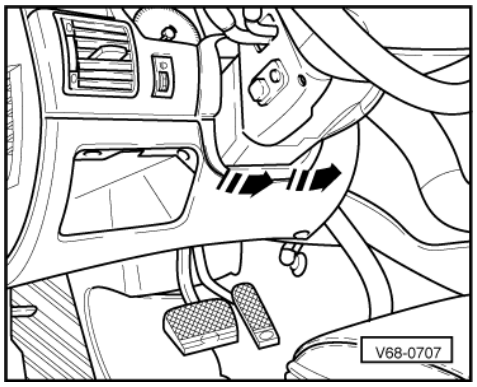

- Move steering wheel slightly so that the steering lock engages.
- -> Lever off lower surround -arrows-.

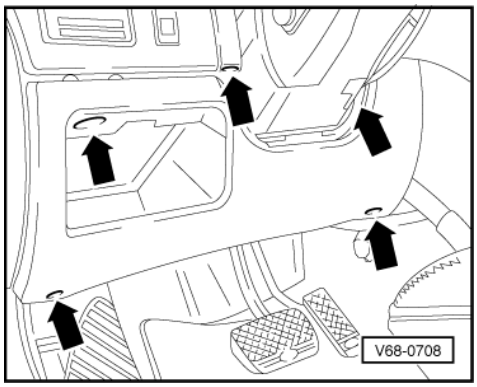

- -> Unscrew cover -arrows-.

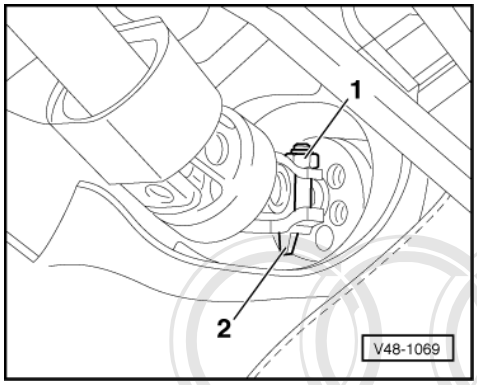

- -> Unscrew nut -1- at universal joint.
- Relieve tension on eccentric by turning tensioning bolt clockwise and remove bolt.

Note:

As a result of design improvements, safety guard -2- is discontinued.

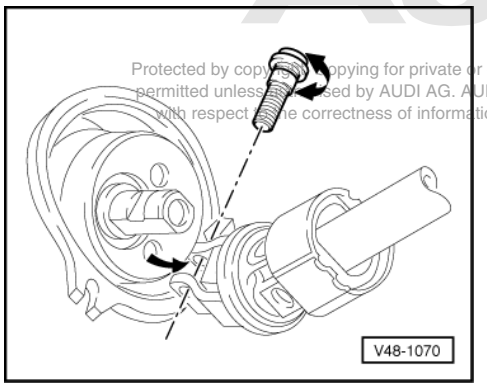

Secure steering column against sliding apart => Page 240

- -> Swivel the universal joint downwards out of the way.
- Remove sealing boot towards inside.

Note:

If sealing boot is damaged always install a new one.

Ensure sealing boot is correctly positioned.

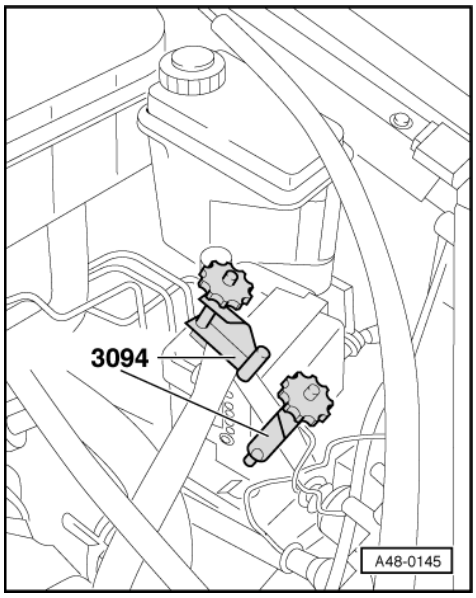

The coarse thread locating pin on the bulkhead must engage in the sealing boot rim aperture.

- Detach front wheels.
- -> Pinch off suction and return pipes with hose clamps -3094-.

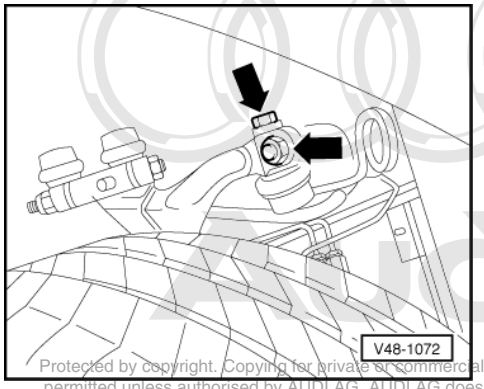

- -> Loosen track rod end bolts and push track rod end out of way in downwards direction.

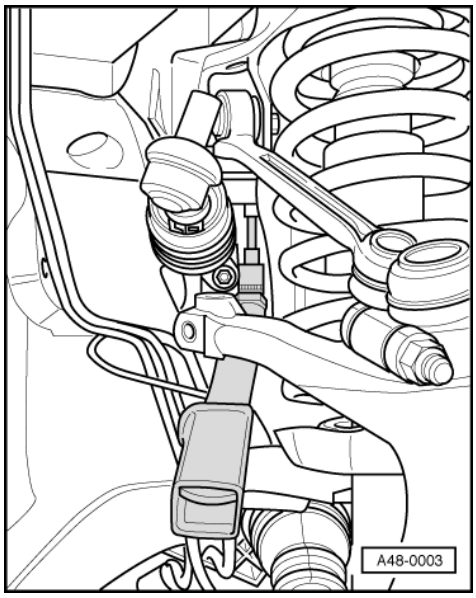

- -> Right side of vehicle:
- Unscrew the right steering box securing bolt.

Note:

To facilitate access, detach fuel line from the bracket and push the fuel line slightly downwards.

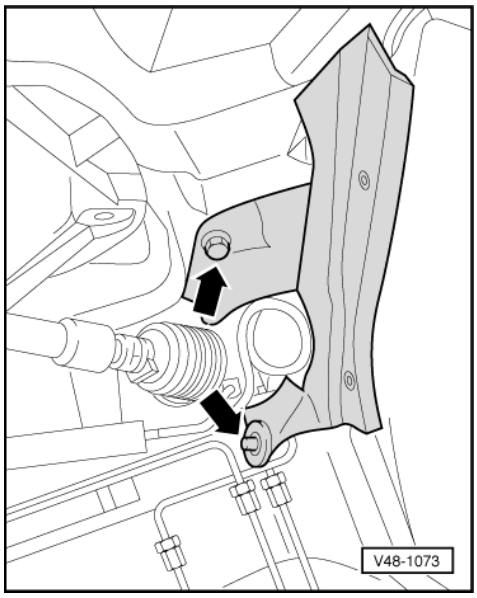

- -> Left vehicle side:
- Remove rear half of left front wheel housing panel.
- Remove left wheel housing panel insulating mat.

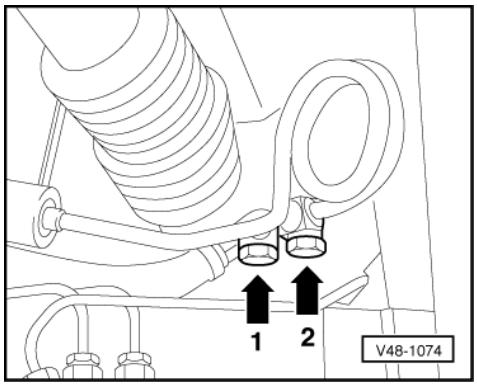

- Place pan underneath to catch hydraulic fluid.
- -> Unscrew expansion hose -2- and return hose -1- from steering box (access through wheel housing).
- Detach connector from Servotronic valve on vehicles equipped with Servotronic.

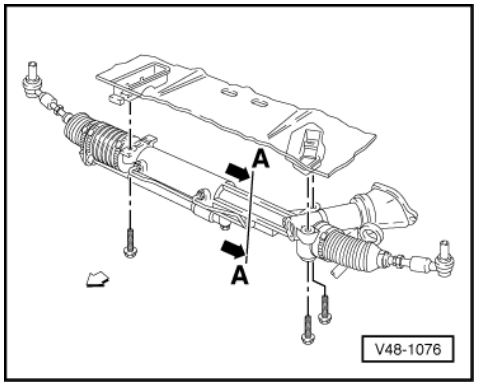

- -> Unscrew both steering box securing bolts on left side through the wheel housing aperture.
- Free up steering box and mounting at plenum chamber lower end.
- Remove steering box to left through wheel housing (second mechanic required).

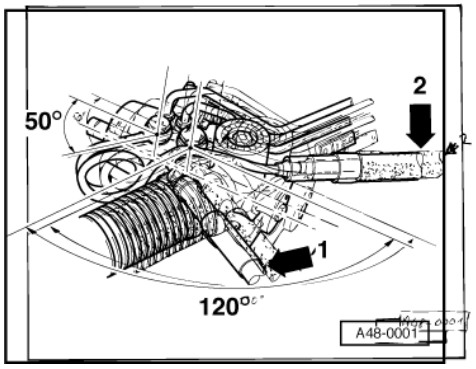

Upon installation, pay special attention to the following:

- Fix the steering box in the centred position before installation => Page 255 .

-> Ensure free movement and correct installation position of hydraulic hoses.

1 - Return hose
2 - Expansion hose

- Insert steering box into mounting at plenum chamber lower end.

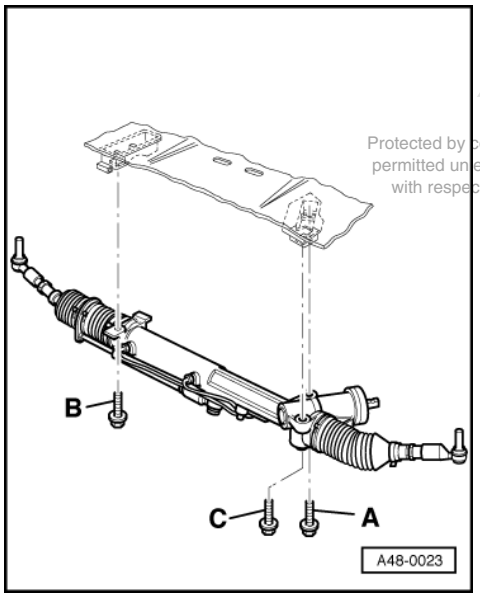

- -> Tighten bolts in sequence A, B, C
- Tightening torque: 70 Nm.

- Unlock the steering wheel lock and set the steering wheel in the horizontal position.
- Align the steering column free of tension to the steering rack pinion:

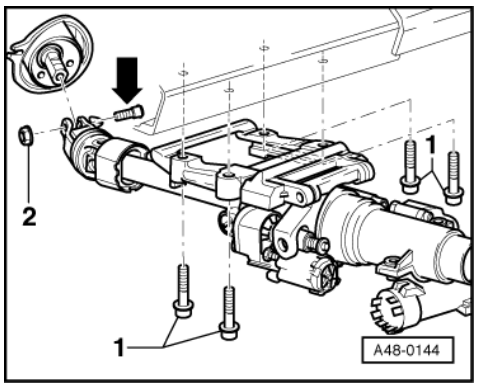

-> Detach the steering column to assembly support bolted connection -1-.

Install the steering column universal joint to the steering rack pinion.

Tension the eccentric bolt -arrow- in counter-clockwise direction and tighten the nut -2- to 40 Nm.

Re-tighten the bolted connection -1- to 20 Nm.

- Remove centring device -V.A.G 1907- and tighten closure bolt to 12 Nm.
- Bleed steering system => Page 317
- Check hydraulic fluid level =>Page 316
- Check steering system for leaks =>Page 318
- Checking vehicle alignment => Page 212

6.3 - Overview of heat shields for V6 TDI engine

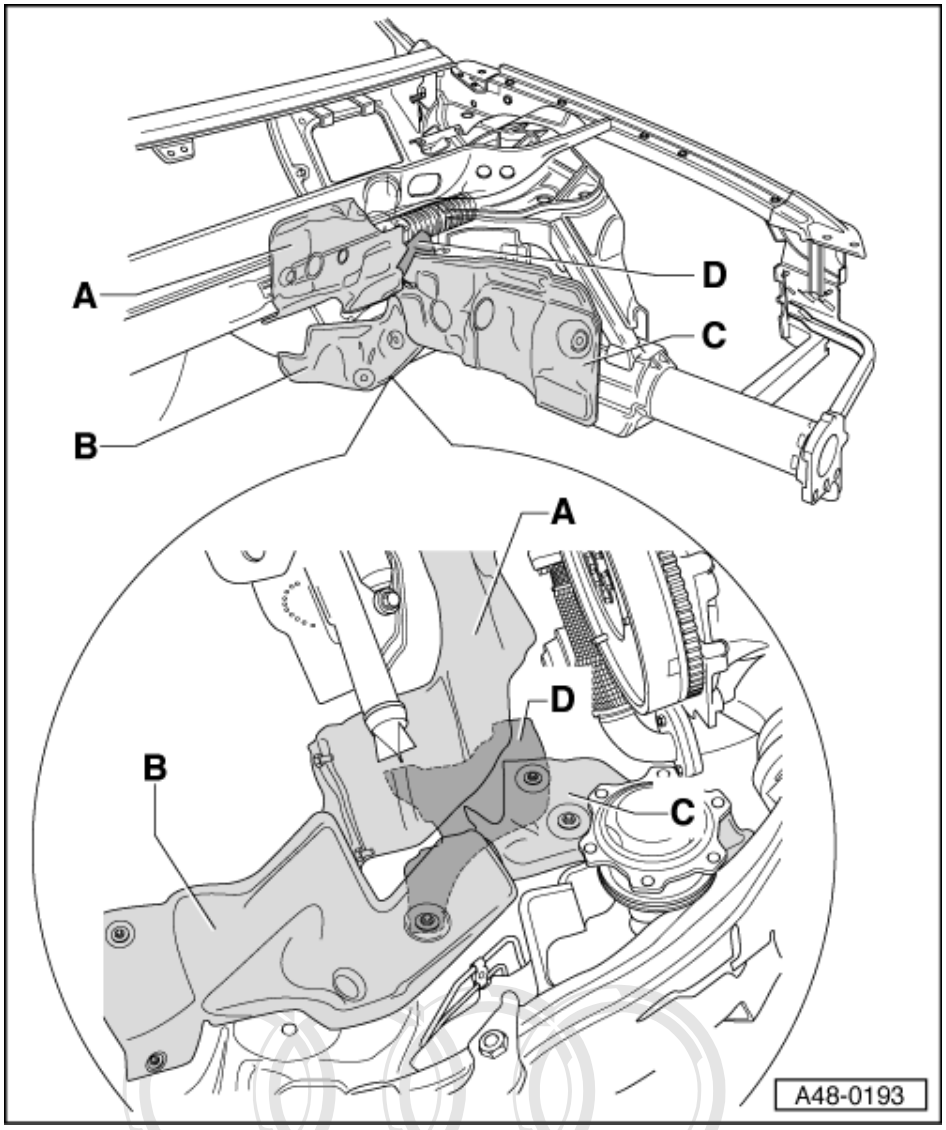

In vehicles with V6 TDI engines, additional heat shields are fitted on the left side, and an engine cover on the left and right respectively at the track rods.

The left engine compartment cover covers the securing bolts of the steering box. It can, however, only be removed once the heat shields have been detached.

The magnified area (lower half of the illustration) shows the vehicle from below and, for ease of illustration, without the gearbox.

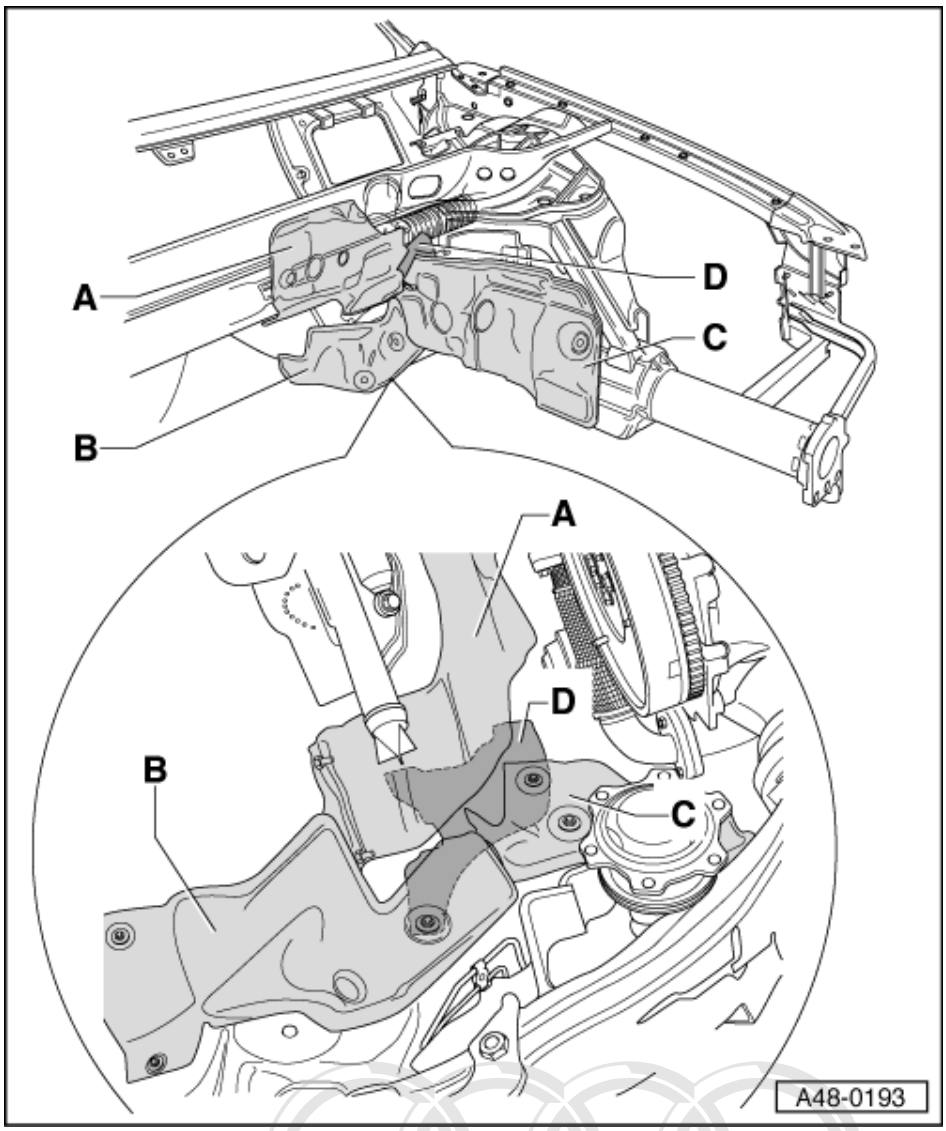

The heat shields have been designated as -A, B, C- in the illustration, the cover as -D-.

Note:

Shortly after the start of production, an improved cover -D- will be installed. It is slightly smaller and is only bolted to heat shield -C-.

Detach heat shields and remove left engine compartment cover => Page 262 .

Repair solution for the right engine compartment cover => Page 354 .

Remove left engine compartment cover:

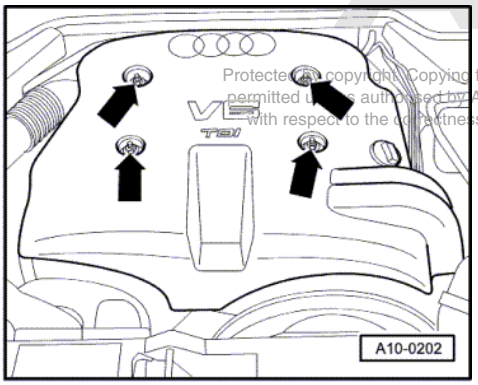

- Detach caps on engine cover panel.
- -> Unscrew engine cover.

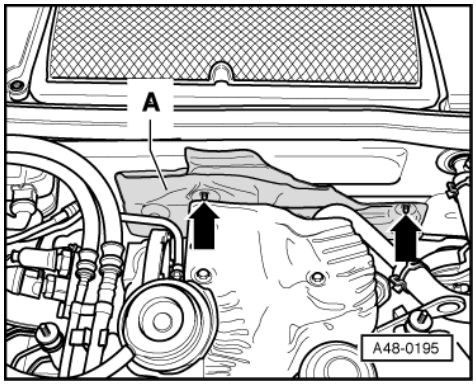

- -> Remove both nuts for shield -A-.
- Lift the shield from the studs.

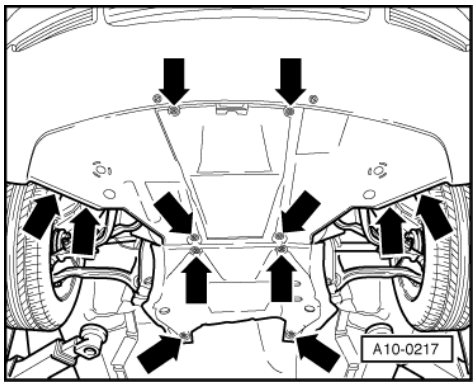

- -> Remove noise insulation (2 sections).

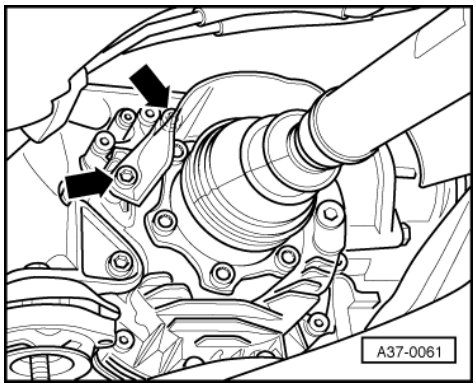

- -> In order to facilitate access to the lower heat shields, detach the heat shield for the left drive shaft.

Note:

The third securing bolt is not visible in the illustration.

Note:

This illustration shows the vehicle from below and, for ease of illustration, without the gearbox.

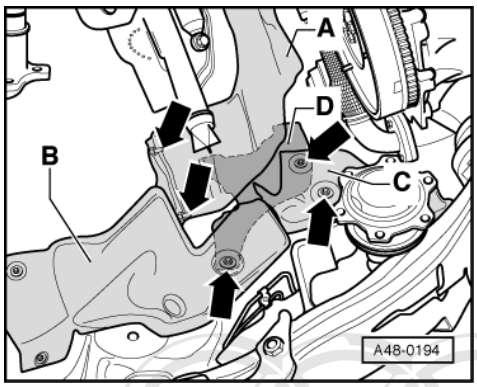

- -> Remove both lower nuts for shield -A-.
- Lift the shield from the studs and push it as far as possible towards the centre of the vehicle.
- Remove the nuts for shields -B and C-.
- Lift the shields -B and C- until you can remove cover -D-.

6.4 - Removing and installing power-assisted steering box for LHD vehicles with V6 TDI engine

Removing

Important
Bring steering wheel to centre position and do not turn whilst performing repair work, as otherwise coil connector of airbag unit could be damaged.

- Remove ignition key with steering wheel centred.

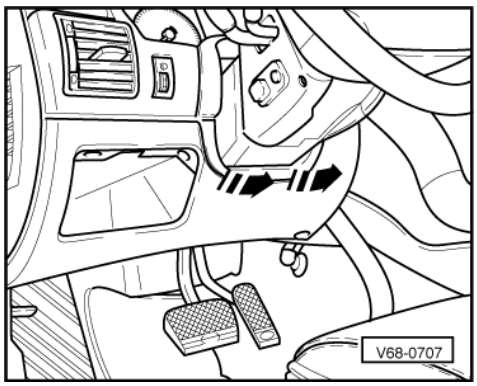

- Move steering wheel slightly so that the steering lock engages.
- -> Lever off lower surround -arrows-.

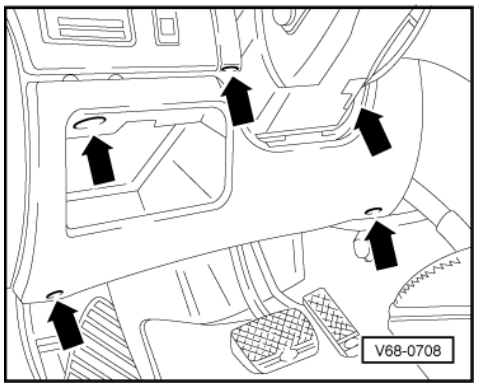

- -> Unscrew cover -arrows-.

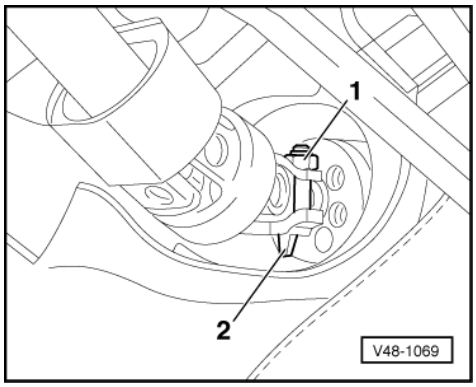

- -> Unscrew nut -1- at universal joint.
- Relieve tension on eccentric by turning tensioning bolt clockwise and remove bolt.

Note:
As a result of design improvements, safety guard -2- is discontinued.

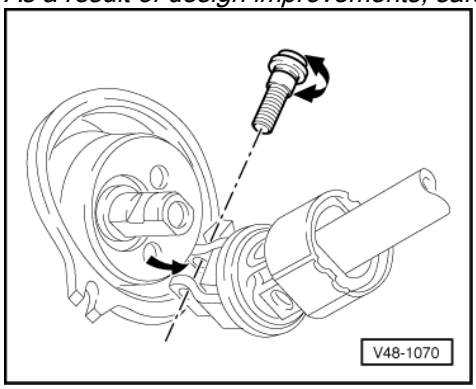

Secure steering column against sliding apart => Page 240
- -> Swivel the universal joint downwards out of the way.
- Remove sealing boot towards inside.

Note:
If sealing boot is damaged always install a new one.
Ensure sealing boot is correctly positioned.
The coarse thread locating pin on the bulkhead must engage in the sealing boot rim aperture.

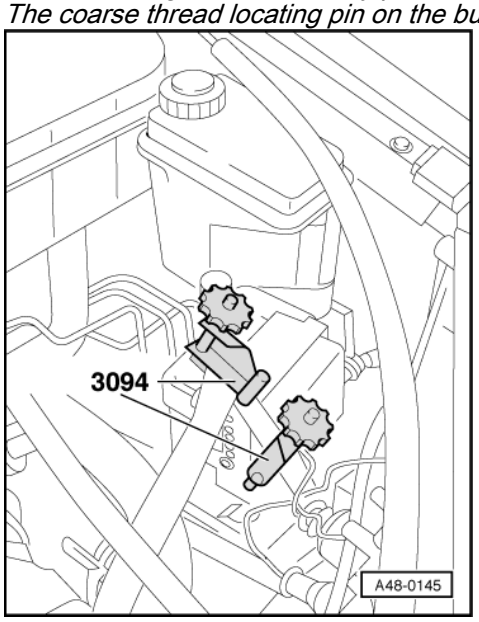

- Detach front wheels.
- -> Pinch off suction and return pipes with hose clamps -3094-.

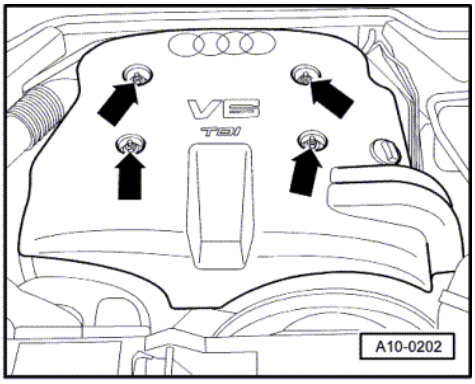

- Detach caps on engine cover panel.
- -> Unscrew engine cover.

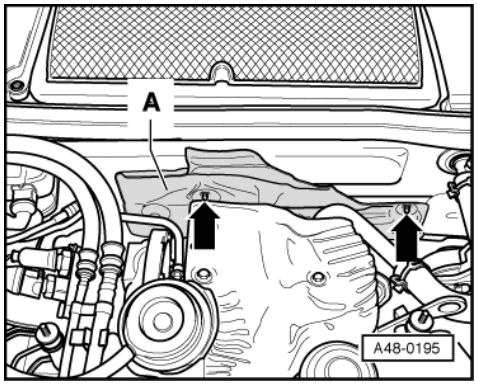

- -> Remove both nuts for shield -A-.
- Lift the shield from the studs.

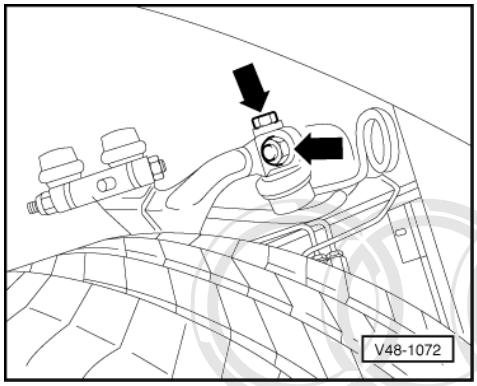

Left and right vehicle sides:

- -> Loosen track rod end bolts and push track rod end out of way in downwards direction.

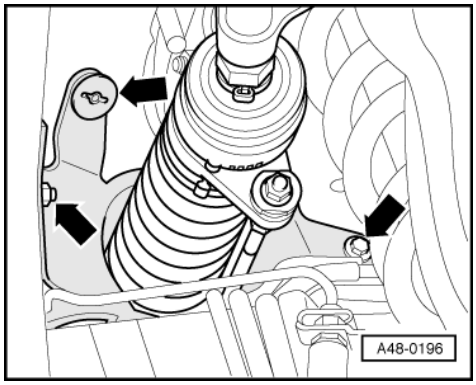

- -> Right side of vehicle:
- Detach the engine compartment cover and remove.

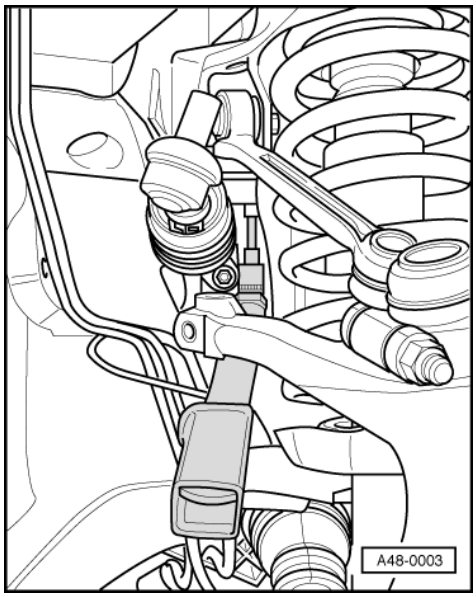

- -> Right side of vehicle:
- Unscrew the right steering box securing bolt.

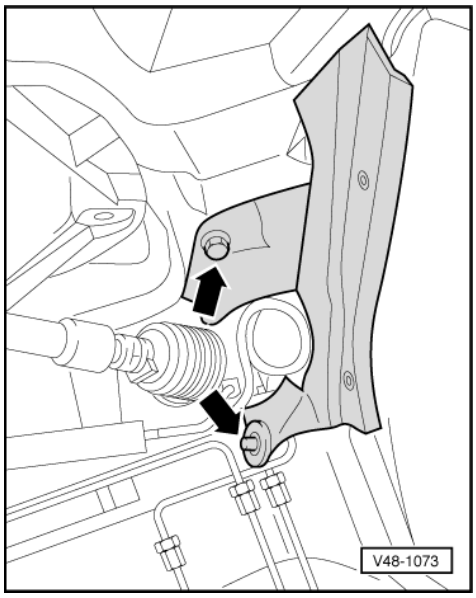

- -> Left vehicle side:
- Remove rear half of left front wheel housing panel.
- Remove left wheel housing panel insulating mat.

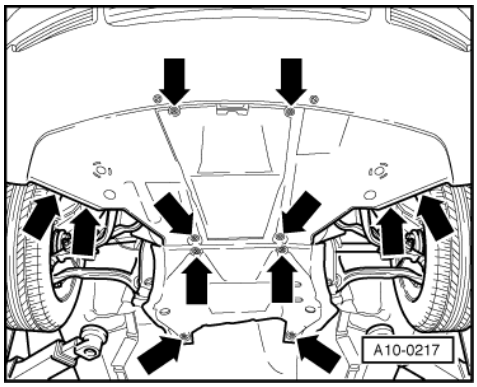

- -> Remove noise insulation (2 sections).

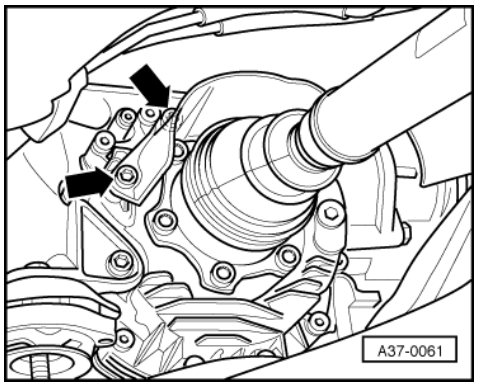

- -> From below:
- In order to facilitate access to the lower heat shields, detach the heat shield for the left drive shaft.

Notes:

- The third securing bolt is not illustrated.
- Overview of heat shields => Page 261

This illustration shows the vehicle from below and, for ease of illustration, without the gearbox.

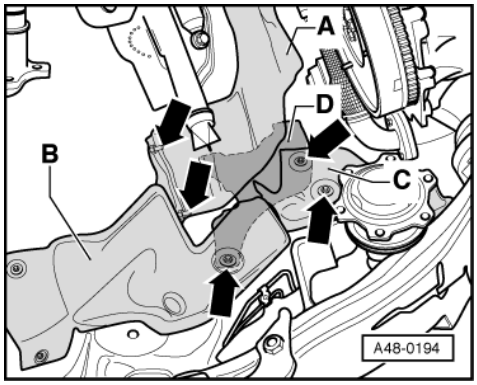

- -> Remove both lower nuts for shield -A-.
- Lift the shield from the studs and push it as far as possible towards the centre of the vehicle.
- Remove the nuts for shields -B and C-.

- Lift the shields -B and C- until you can remove cover -D-.

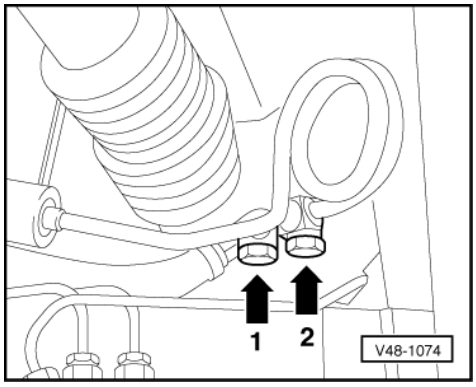

- Place pan underneath to catch hydraulic fluid.
- -> Unscrew expansion hose -2- and return hose -1- from steering box (access through wheel housing).
- Detach connector from Servotronic valve on vehicles equipped with Servotronic.

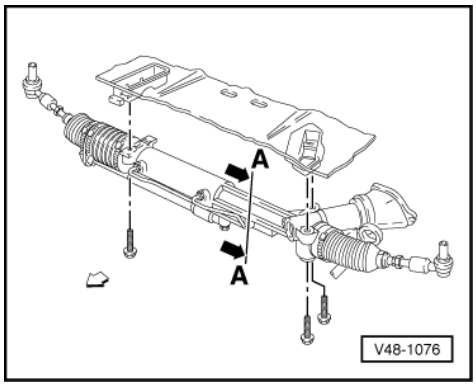

- -> Remove both securing bolts from the left side of the steering box.
- Free up steering box and mounting at plenum chamber lower end.
- Remove steering box to left through wheel housing (second mechanic required).

When installing, pay special attention to the following:

- Fix the steering box in the centred position before installation => Page 255 .

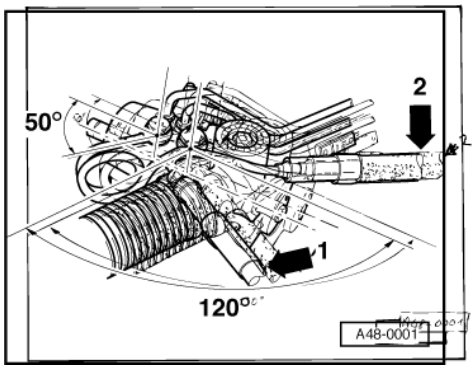

-> Ensure free movement and correct installation position of hydraulic hoses.

1 - Return hose
2 - Expansion hose

- Insert steering box into mounting at plenum chamber lower end.

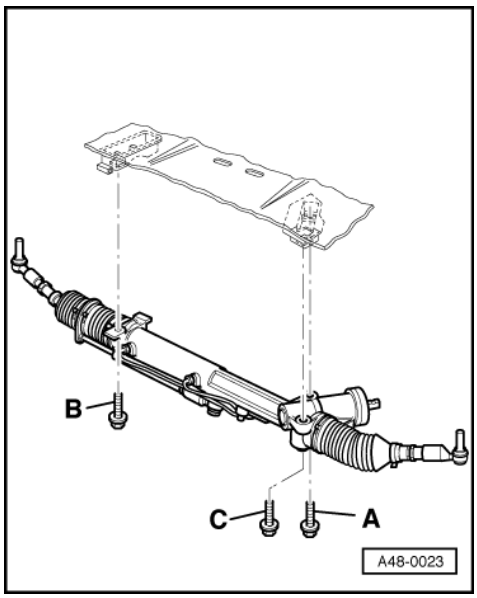

- -> Tighten bolts in sequence A, B, C
- Tightening torque: 70 Nm.

- Unlock the steering wheel lock and set the steering wheel in the horizontal position.
- Align the steering column free of tension to the steering rack pinion:

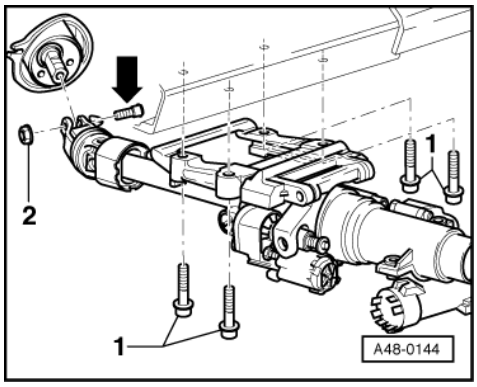

-> Detach the steering column to assembly support bolted connection -1-.

Install the steering column universal joint to the steering rack pinion.

Tension the eccentric bolt -arrow- in counter-clockwise direction and tighten the nut -2- to 40 Nm.

Re-tighten the bolted connection -1- to 20 Nm.

- Remove centring device -V.A.G 1907- and tighten closure bolt to 12 Nm.
- Bleed steering system => Page 317
- Check hydraulic fluid level =>Page 316
- Check steering system for leaks =>Page 318
- Checking vehicle alignment => Page 212

6.5 - Removing and installing power-assisted steering box for LHD vehicles with V8 TDI engine

Removing

Important
Bring steering wheel to centre position and do not turn whilst performing repair work, as otherwise coil connector of airbag unit could be damaged.

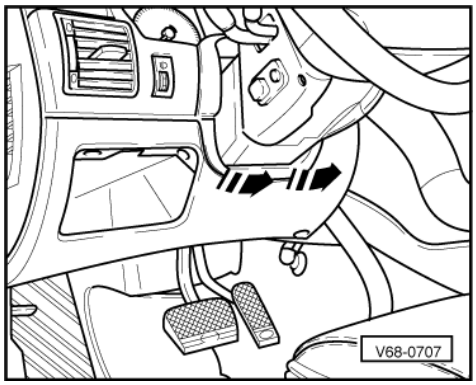

- -> Lever off lower surround -arrows-.

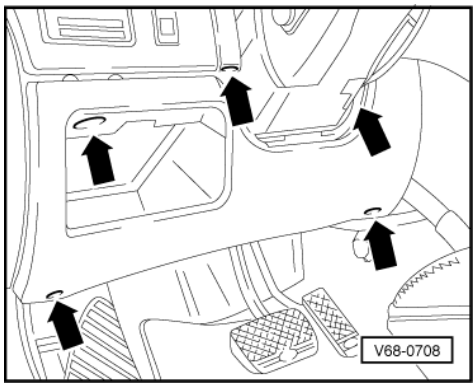

- -> Unscrew cover -arrows-.

Tightening torque: 2.5 Nm

- Detach shelf.

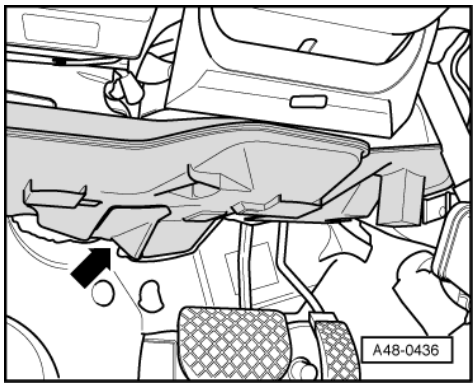

- -> Remove heater channel -arrow-.

- Set wheels to straight-ahead position.
- Remove ignition key with steering wheel centred.

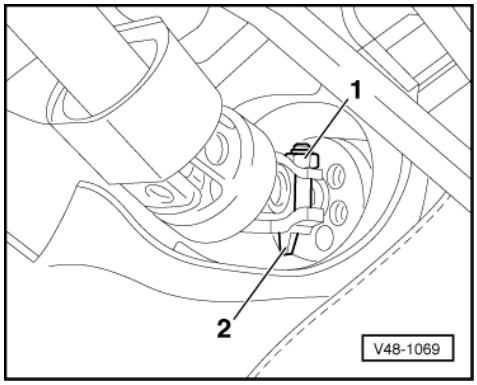

- Move steering wheel slightly so that the steering lock engages.
- -> Unscrew nut -1- at universal joint.
- Relieve tension on eccentric by turning tensioning bolt clockwise and remove bolt.

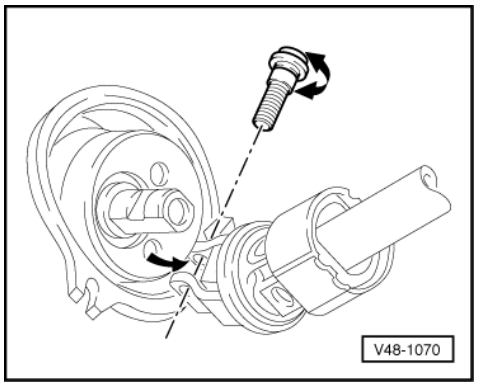

Secure steering column against sliding apart => Page 240

- -> Swivel the universal joint downwards out of the way.
- Remove sealing boot towards inside.

Note:

If sealing boot is damaged always install a new one.

Ensure sealing boot is correctly positioned.

The coarse thread locating pin on the bulkhead must engage in the sealing boot rim aperture.

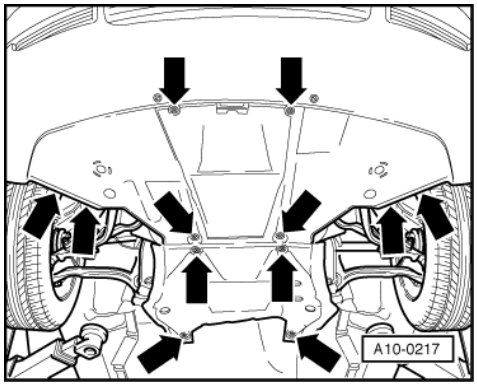

- Remove the front wheels.
- -> Remove rear noise insulation.

Left-hand side

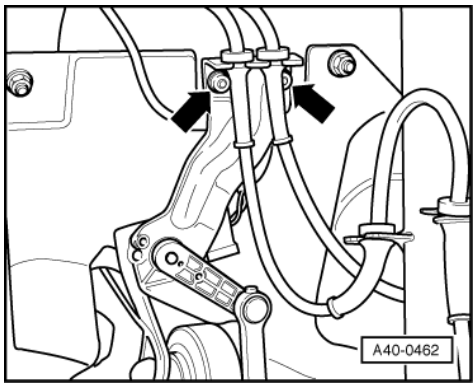

- -> Remove bolts for headlight range control bracket -arrows- => Page 69 , Fig. 5 .

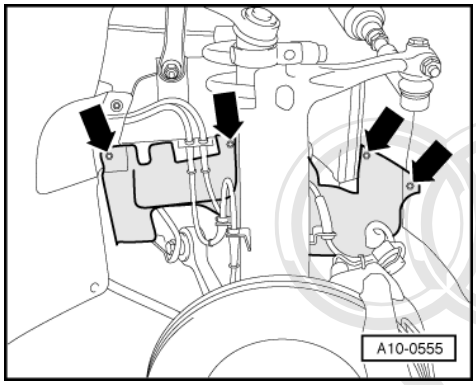

- Remove noise insulation on left side -arrows-.

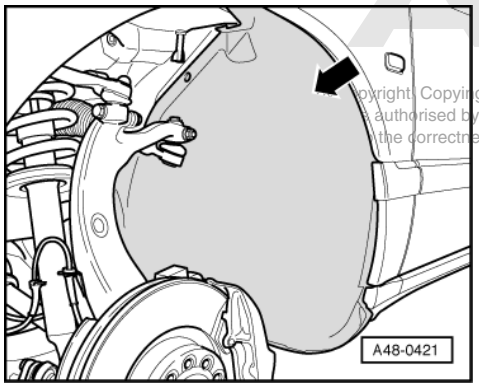

- -> Remove the wheel housing liner.

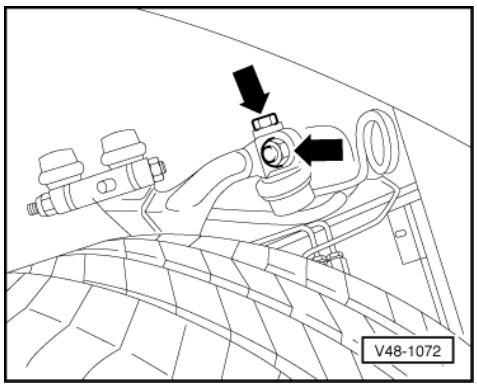

- -> Loosen track rod end bolts and push track rod end out of way in downwards direction.

Tightening torque => Page 17 , Fig. 23

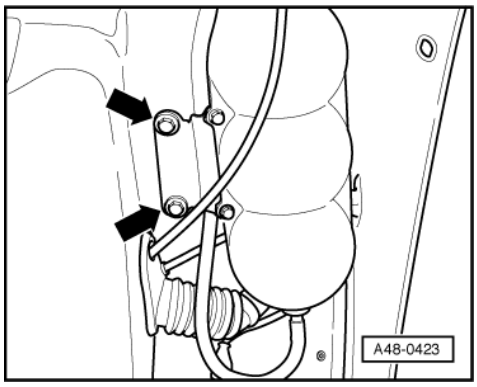

For vehicles with Servotronic only

- -> Loosen the bolted connection -arrows- of the left wheel housing vacuum reservoir.

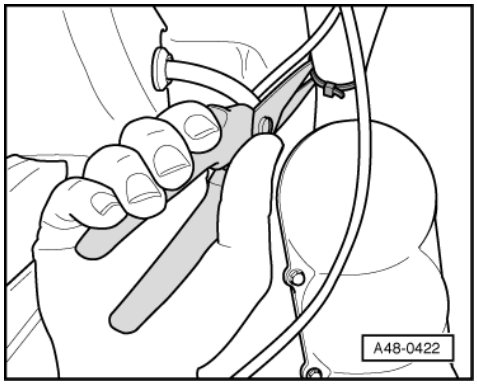

- -> Cut cable ties on vehicles with Servotronic.

Note:

Do not damage wiring harness in the process

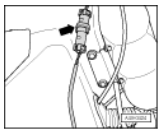

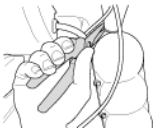

- -> Unplug the connector for Servotronic -arrow-.
- Reattach the vacuum reservoir.
- Detach Servotronic wire from wheel housing.

Right side

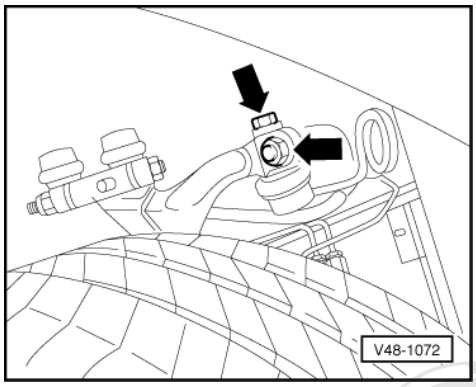

- -> Loosen track rod end bolts and push track rod end out of way in downwards direction.

Tightening torque => Page 17 , Fig. 23

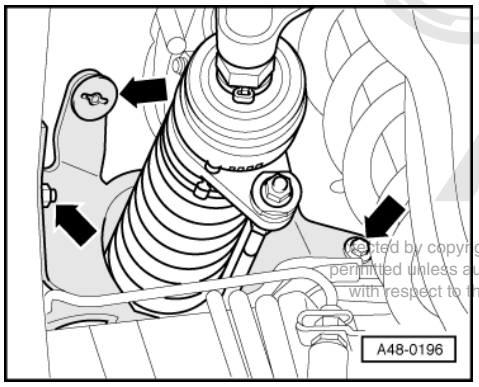

- -> Remove the noise insulation

Note:

The noise insulation is bolted to the wheel housing panel at this location.

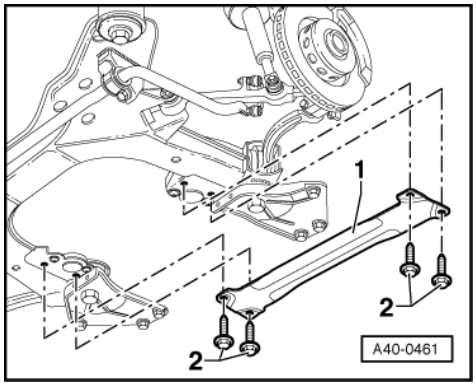

- -> Remove cross member -1-.

Tightening torque -2-: 50 Nm + 90°

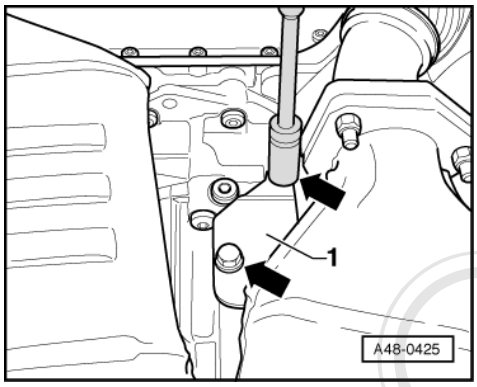

- -> Remove the shield -1- for the gearbox multi-function switch.

Two bolts -arrows-

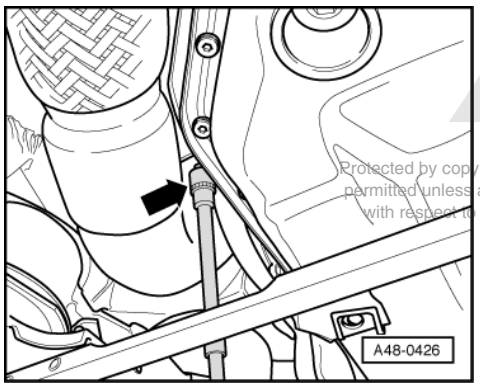

- -> Remove the shield for the gearbox multi-function switch.

One bolt -arrow-

- Remove the shield for the gearbox multi-function switch.

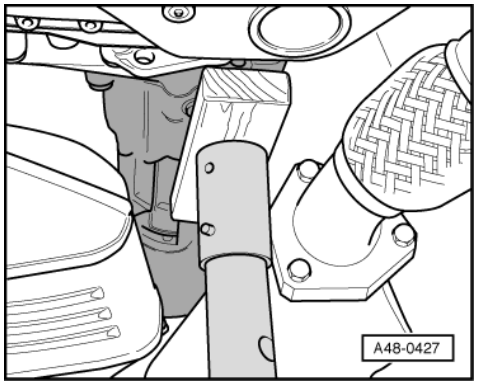

- -> Position the gearbox jack with a hardwood support under the gearbox as illustrated.

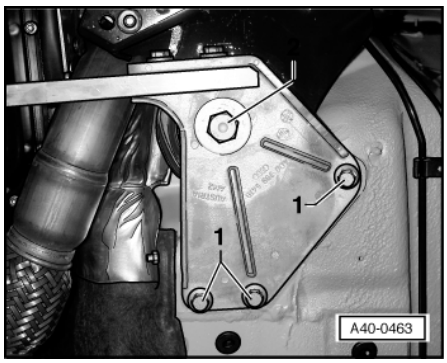

- -> Remove bolts -1- on the left and right.
- Remove bolts -2- on the left and right.
- Slowly lower the gearbox jack.

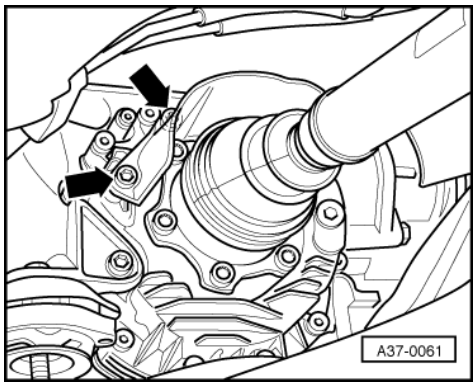

- -> Detach the heat shield for the left drive shaft.

Note:

The third securing bolt is not illustrated.

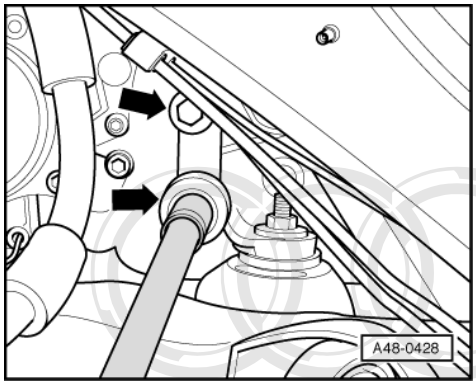

- -> Remove the exhaust system mounting at the gearbox support.

Tightening torque:

=> 8-cylinder TDI® Engine, Mechanical Components; Repair group 26; Removing and installing parts of exhaust system Removing and installing parts of exhaust system

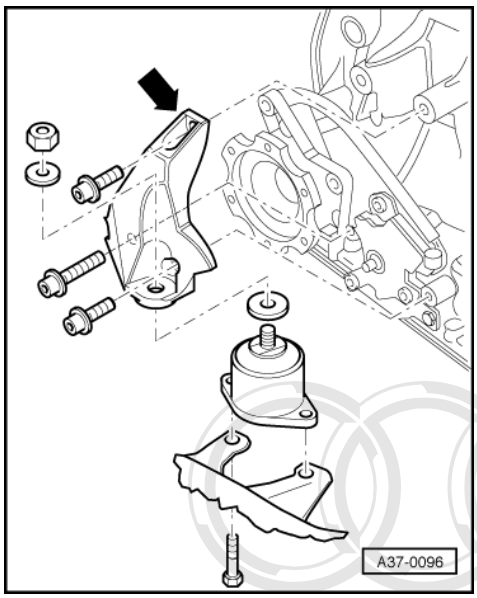

- -> Unscrew all securing screws/-nut of left-hand gearbox mounting and the left gearbox support -arrow-.
- Remove the gearbox mounting and the gearbox support.

Tightening torque:

=> 8-cylinder TDI® Engine, Mechanical Components; Repair group 26; Removing and installing parts of exhaust system; Removing and installing left front exhaust pipe with oxidising catalytic converter Removing and installing parts of exhaust system Removing and installing left front exhaust pipe with oxidising catalytic converter

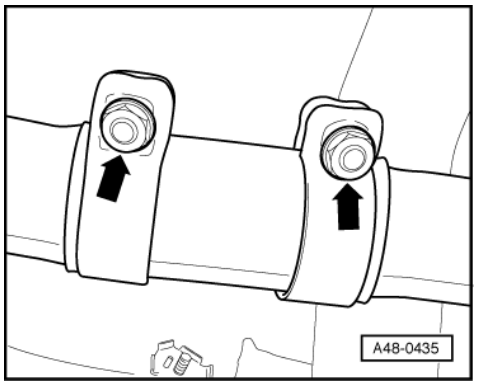

- -> Release the front left clamping sleeve for the exhaust system.

Observe the instructions:

=> 8-cylinder TDI® Engine, Mechanical Components; Repair group 26; Removing and installing parts of exhaust system Removing and installing parts of exhaust system

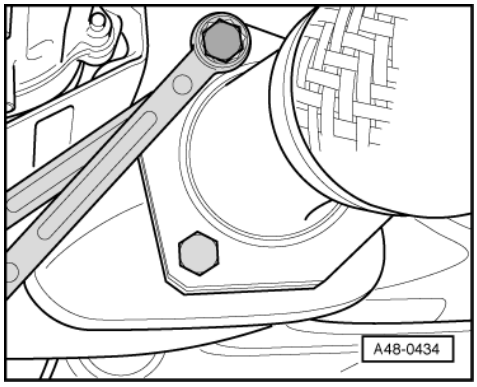

- -> Detach the connection between front exhaust pipe and primary catalytic converter/oxidising catalytic converter on the left side.

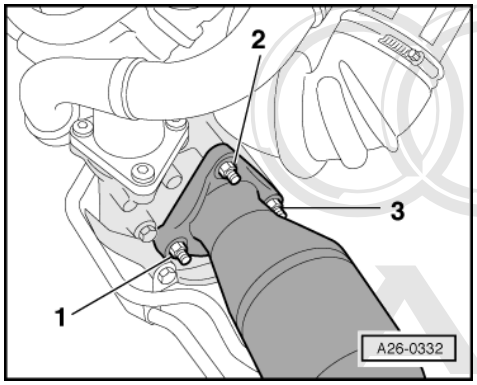

Torques and notes:

=> 8-cylinder TDI® Engine, Mechanical Components; Repair group 26; Removing and installing parts of exhaust system Removing and installing parts of exhaust system

- -> Unscrew nuts 1 through 3.

Accessibility of the nuts -2- => Fig. 1

Note:

Illustrated in plan view

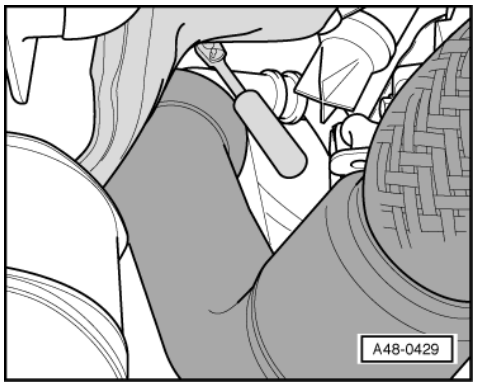

-> Fig.1 In order to remove the upper nut of the front exhaust pipe, the ratchet spanner with extension and universal joint must be inserted from the rear via the front exhaust pipe.

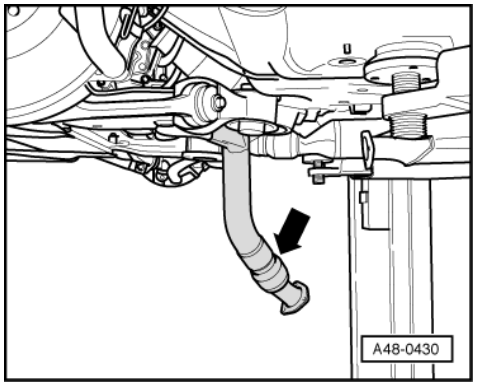

- -> Remove the front exhaust pipe rearwards and downwards.

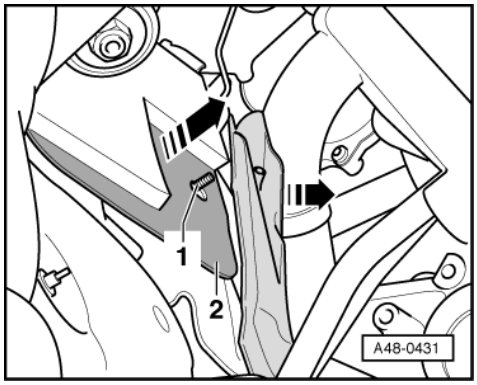

- Remove the speed nut at Item -1-
- Bend the shield slightly away from the body as illustrated.
- Remove the sound proofing -2-.

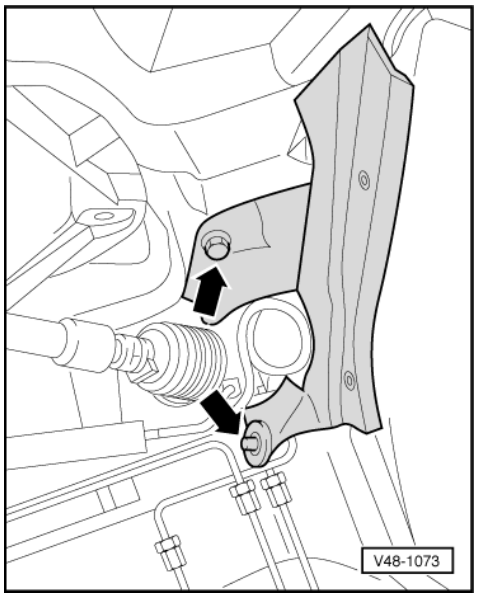

- -> Remove the noise insulation on left side.
- If necessary, detach the Servotronic wire in the wheel housing (fastened using adhesive tape)

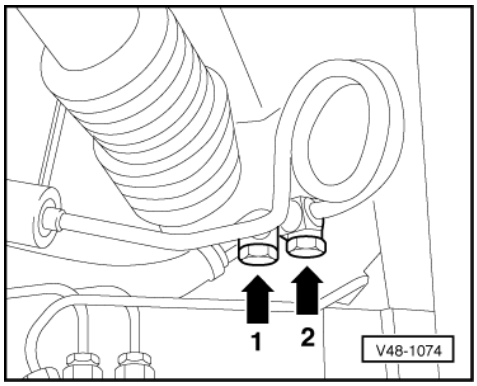

- Cover the brake system to protect it from hydraulic fluid
- Place a clean catch pan underneath the vehicle.
- -> Loosen the bolt -2- from the wheel housing side.
- Allow the escaping hydraulic fluid to drain into a suitable container.
- Loosen the bolt -1- from the wheel housing side.

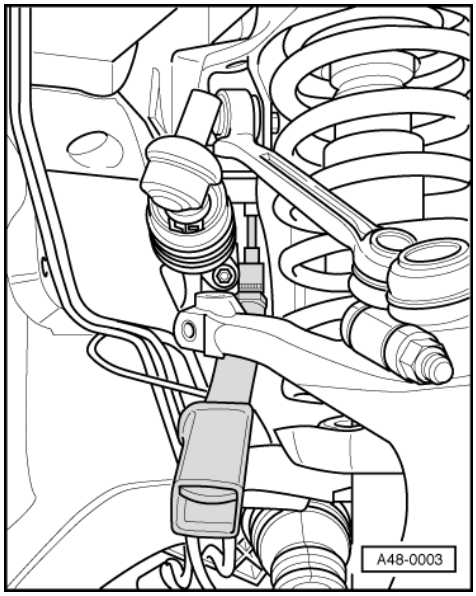

- -> Remove the securing bolt of the on the right side steering box.

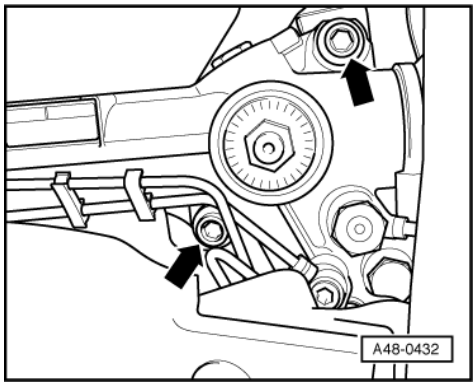

- -> Remove the securing bolts -arrows- on the left side of the steering box from below.
- Remove steering box to left through wheel housing (second mechanic required).

Installing

- Fix the steering box in the centred position before installation => Page 255 .
- Remove the centring device from the new steering box => Page 255 .

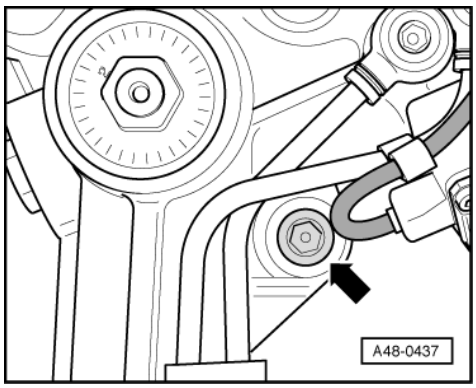

- -> Start the bolt -arrow- into the steering box before installation.

Bolt is kept from falling out by Servotronic electrical wire.

- Remove plastic closure bolts on hydraulic unions at steering box.

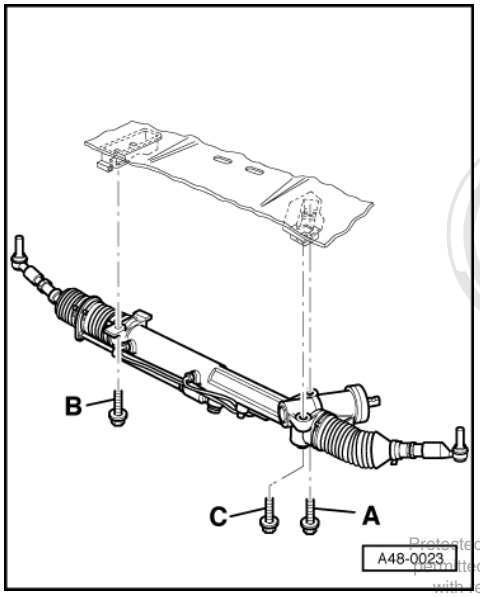

- Insert steering box from left side (two mechanics required).
- Screw in bolts -C- by hand
- Screw in bolt -B- by hand
- -> Tighten bolt -A- to torque

Note:

Take care not to pinch the Servotronic wire if so equipped.

- Tighten bolt -B- to torque
- Tighten bolt -C- to torque

Tightening torque: 70 Nm

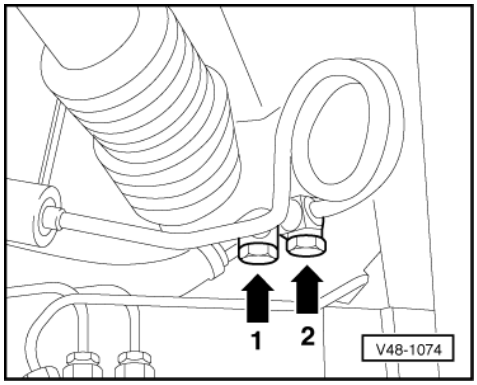

- Tighten banjo bolts -1- from below using new seals.

Tightening torque => Page 383

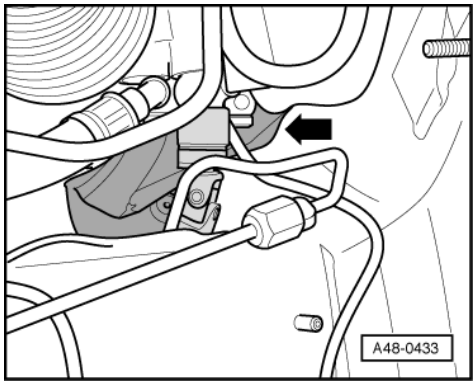

- -> Push the insulating mat -arrow- to the side.
- Fasten the banjo bolt with a new seal from below.

Tightening torque => Page 383

- Reposition the insulating mat at the plenum chamber.

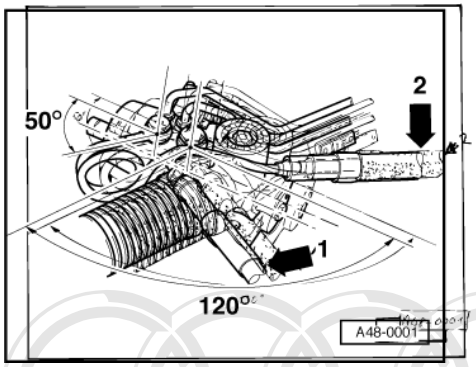

-> Ensure free movement and correct installation position of hydraulic hoses.

1 - Return hose
2 - Expansion hose

- Further installation takes place in the reverse order of removal.

Observe the instructions:

=> 8-cylinder TDI® Engine, Mechanical Components; Repair group 26; Removing and installing parts of exhaust system Removing and installing parts of exhaust system

- Unlock the steering wheel lock and set the steering wheel in the horizontal position.
- Align the steering column free of tension to the steering rack pinion:

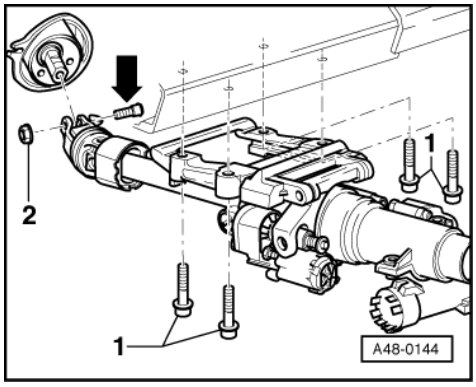

-> Detach the steering column to assembly support bolted connection -1-.

Install the steering column universal joint to the steering rack pinion.

Tension the eccentric bolt -arrow- in counter-clockwise direction and tighten the nut -2- to 40 Nm.

Re-tighten the bolted connection -1- to 20 Nm.

- Bleed steering system => Page 317
- Check hydraulic fluid level =>Page 316
- Check steering system for leaks =>Page 318
- Checking vehicle alignment => Page 212

6.6 - Power-assisted steering box for LHD vehicles with 12-cyl. petrol engine, removing and installing

Removing

Important
Bring steering wheel to centre position and do not turn whilst performing repair work, as otherwise coil connector of airbag unit could be damaged.

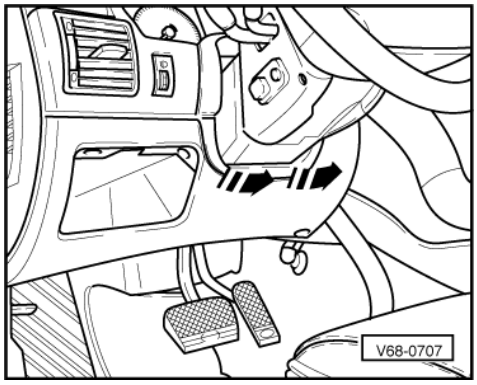

- -> Lever off lower surround -arrows-.

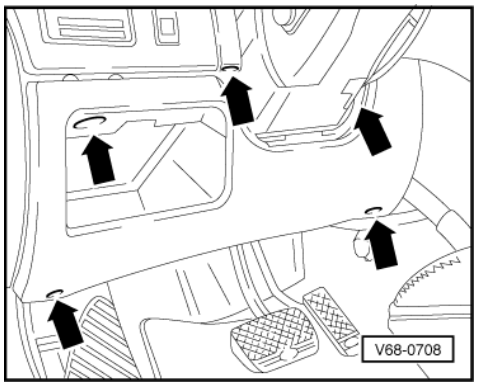

- -> Unscrew cover -arrows-.

Tightening torque: 2.5 Nm

- Detach shelf.

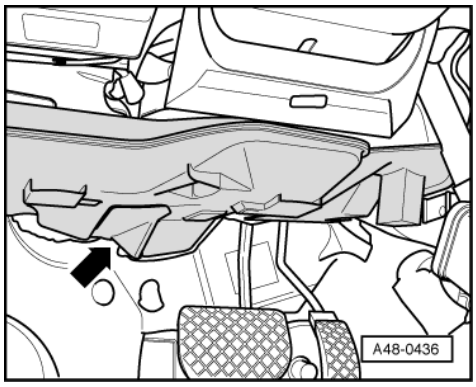

- -> Remove heater channel -arrow-.

- Set wheels to straight-ahead position.
- Remove ignition key with steering wheel centred.

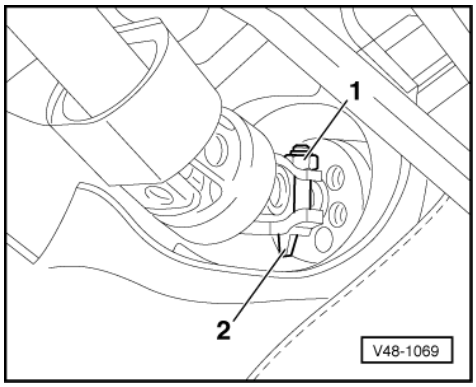

- Move steering wheel slightly so that the steering lock engages.
- -> Unscrew nut -1- at universal joint.
- Relieve tension on eccentric by turning tensioning bolt clockwise and remove bolt.

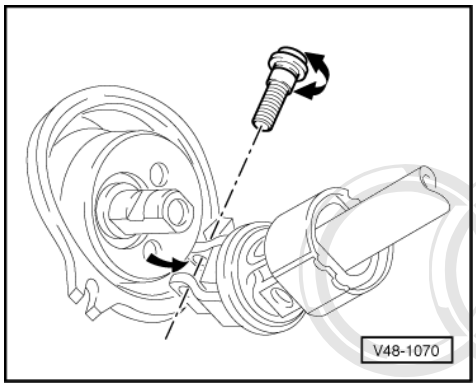

Secure steering column against sliding apart => Page 240

- -> Swivel the universal joint downwards out of the way.
- Remove sealing boot towards inside.

Note:

If sealing boot is damaged always install a new one.

Ensure sealing boot is correctly positioned.

The coarse thread locating pin on the bulkhead must engage in the sealing boot rim aperture.

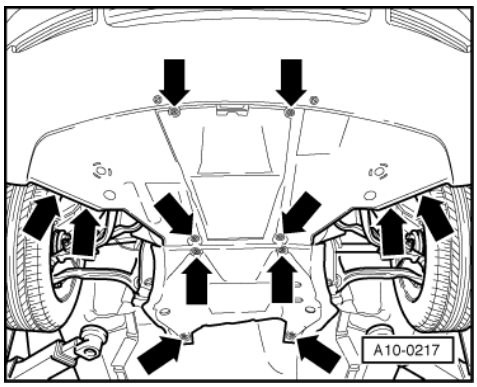

- Remove the front wheels.
- -> Remove rear noise insulation.

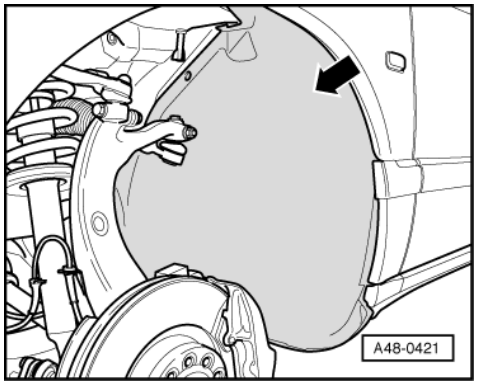

- -> Remove left rear wheel housing panel.

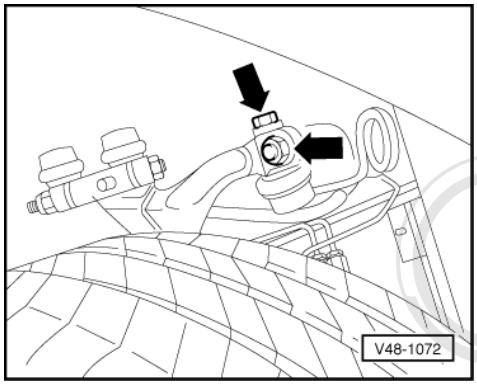

- -> Loosen track rod end bolts and push track rod end out of way in downwards direction.

Tightening torque => Page 17 , Fig. 23

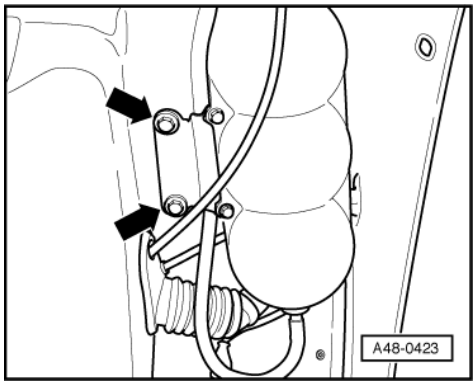

For vehicles with Servotronic only

- -> Loosen the bolted connection -arrows- of the left wheel housing vacuum reservoir.

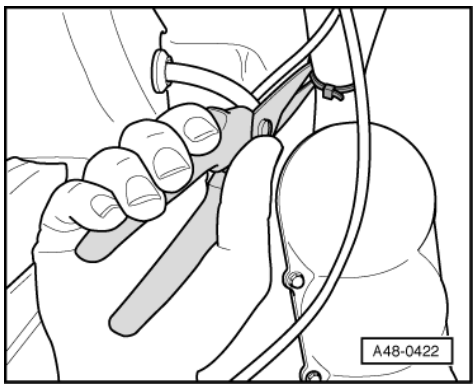

- -> Cut cable ties on vehicles with Servotronic.

Note:

Do not damage wiring harness in the process

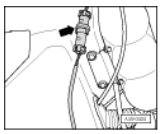

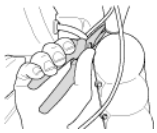

- -> Detach Servotronic electrical connection.
- Reattach the vacuum reservoir.
- Detach Servotronic wire from wheel housing.

Right side

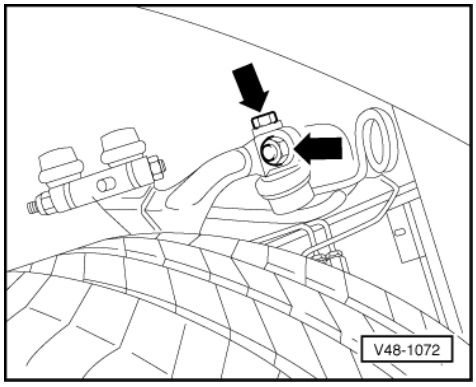

- -> Loosen track rod end bolts and push track rod end out of way in downwards direction.

Tightening torque => Page 17 , Fig. 23

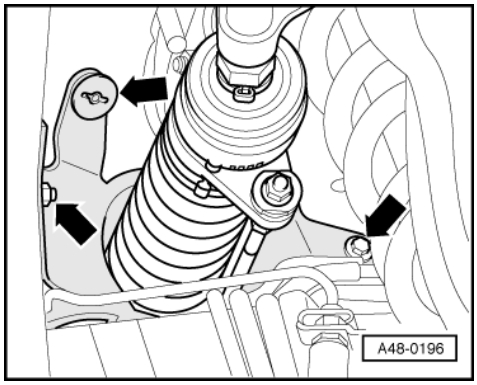

- -> Remove the noise insulation

Note:

The noise insulation is bolted to the wheel housing panel at this location.

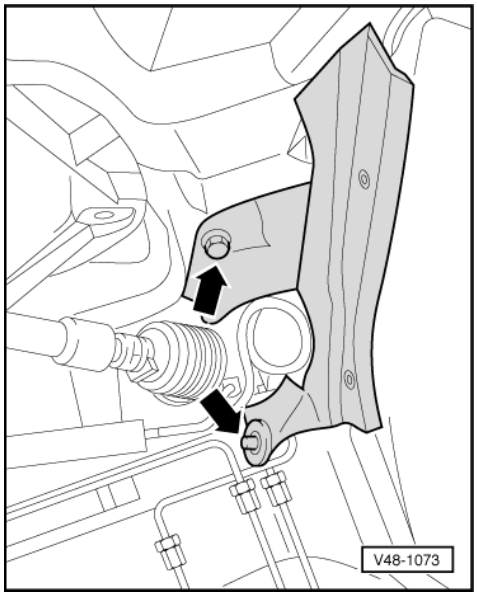

- -> Remove the noise insulation on left side.
- If necessary, detach the Servotronic wire in the wheel housing (fastened using adhesive tape)

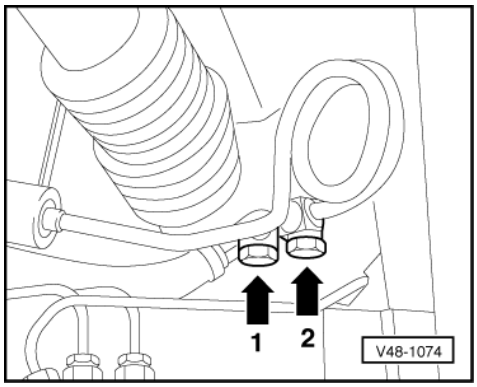

- Cover the brake system to protect it from hydraulic fluid
- Place a clean catch pan underneath the vehicle.
- -> Loosen the bolt -2- from the wheel housing side.

- Allow the escaping hydraulic fluid to drain into a suitable container.
- Loosen the bolt -1- from the wheel housing side.

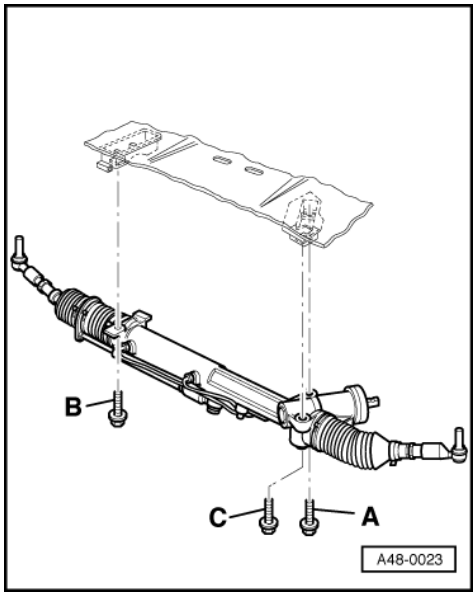

- -> Loosen the bolt -C- from the wheel housing side.

To do so, use an 8 mm internal sized socket with a maximum length of 50 mm.
- Loosen the bolt -A- => Page 289

Two mechanics are required to perform this procedure.
- Loosen the bolt -B- => Page 290

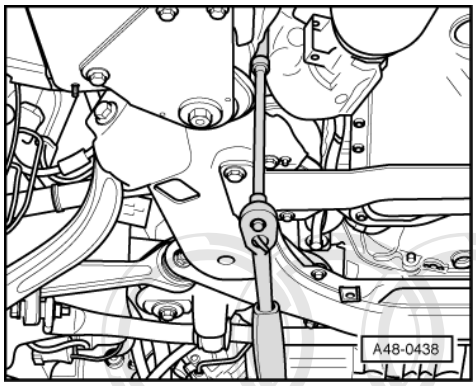

- -> Insert the tool as shown in illustration.

To do so, use an 8 mm internal sized socket with a maximum length of 75 mm, as well as an extension and a universal joint.

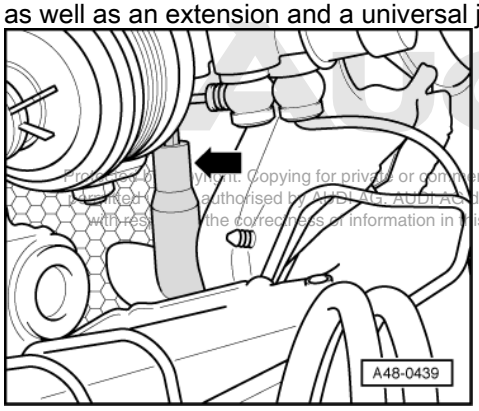

- -> Second mechanic positions socket -arrow- on steering box.

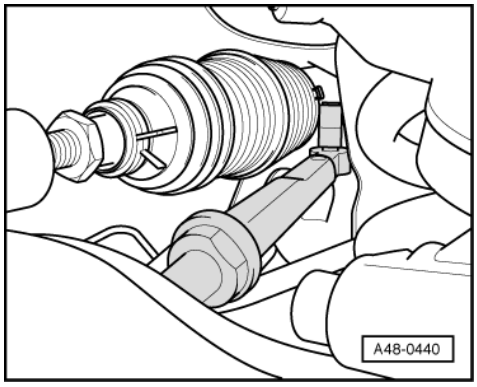

- -> Loosen the steering box securing bolt on the left side.
- Remove steering box to left through wheel housing (second mechanic required).

Installing

- Fix the steering box in the centred position before installation => Page 255 .
- Remove the centring device from the new steering box => Page 255 .

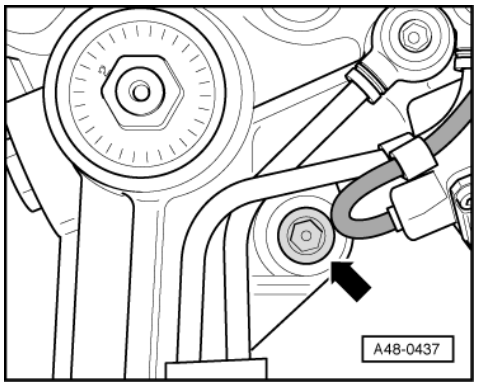

- -> Start the bolt -arrow- into the steering box before installation.

Bolt is kept from falling out by Servotronic electrical wire.

- Remove plastic closure bolts on hydraulic unions at steering box.

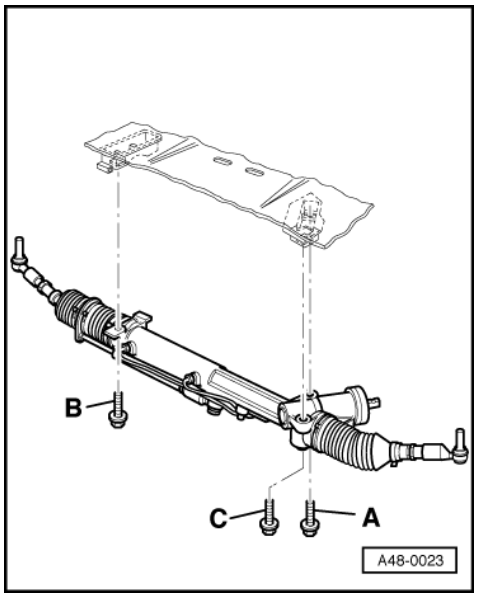

- Insert steering box from left side (two mechanics required).
- Screw in bolts -C- by hand
- Screw in bolt -B- by hand
- -> Tighten bolt -A- to torque => Page 291

Tightening torque: 72 Nm

Note:

Take care not to pinch the Servotronic wire if so equipped.

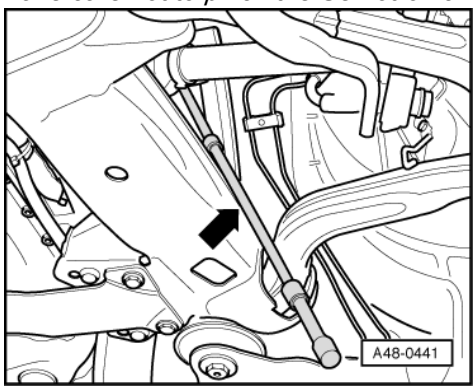

- -> Insert the extension with universal joint and an 8 mm internal sized socket with a maximum length of 75 mm as shown in the illustration.

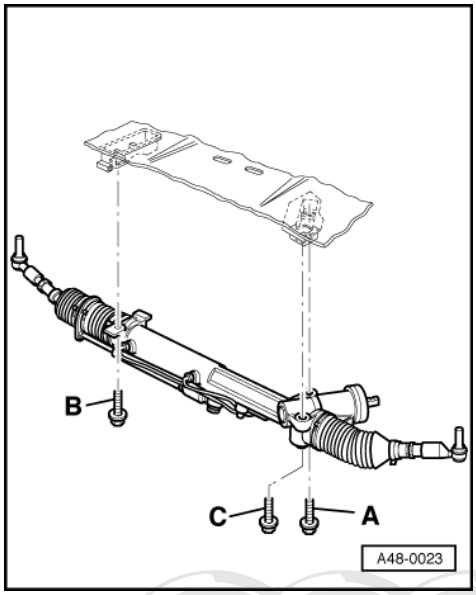

- Tighten bolt -B- to torque
- Tighten bolt -C- to torque

Tightening torque: 70 Nm

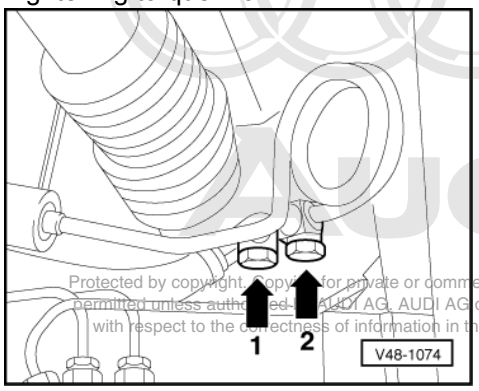

- -> Tighten banjo bolts -1- using new seals.

Tightening torque => Page 398

- Tighten banjo bolts -2- using new seals.

Tightening torque => Page 398

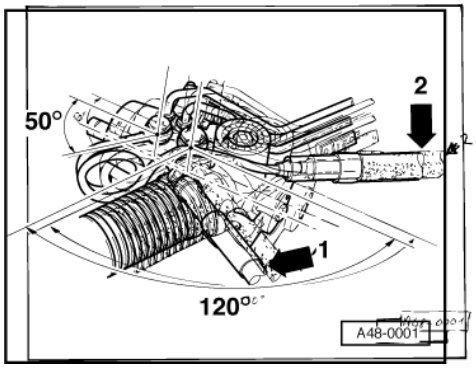

-> Ensure free movement and correct installation position of hydraulic hoses.

1 - Return hose
2 - Expansion hose

- Further installation takes place in the reverse order of removal.

- Unlock the steering wheel lock and set the steering wheel in the horizontal position.
- Align the steering column free of tension to the steering rack pinion:

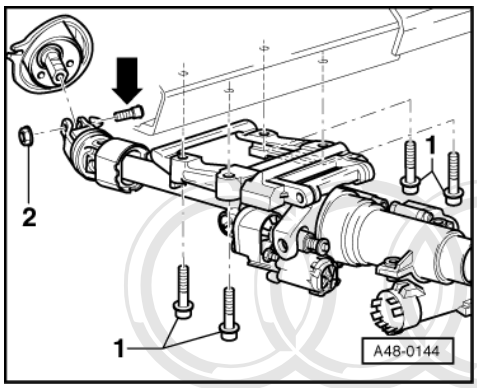

-> Detach the steering column to assembly support bolted connection -1-.

Install the steering column universal joint to the steering rack pinion.

Tension the eccentric bolt -arrow- in counter-clockwise direction and tighten the nut -2- to 40 Nm.

Re-tighten the bolted connection -1- to 20 Nm.

- Bleeding steering system => Page 317
- Check hydraulic fluid level =>Page 316
- Check steering system for leaks =>Page 318
- Checking vehicle alignment=> Page 212

6.7 - Servicing power-assisted steering

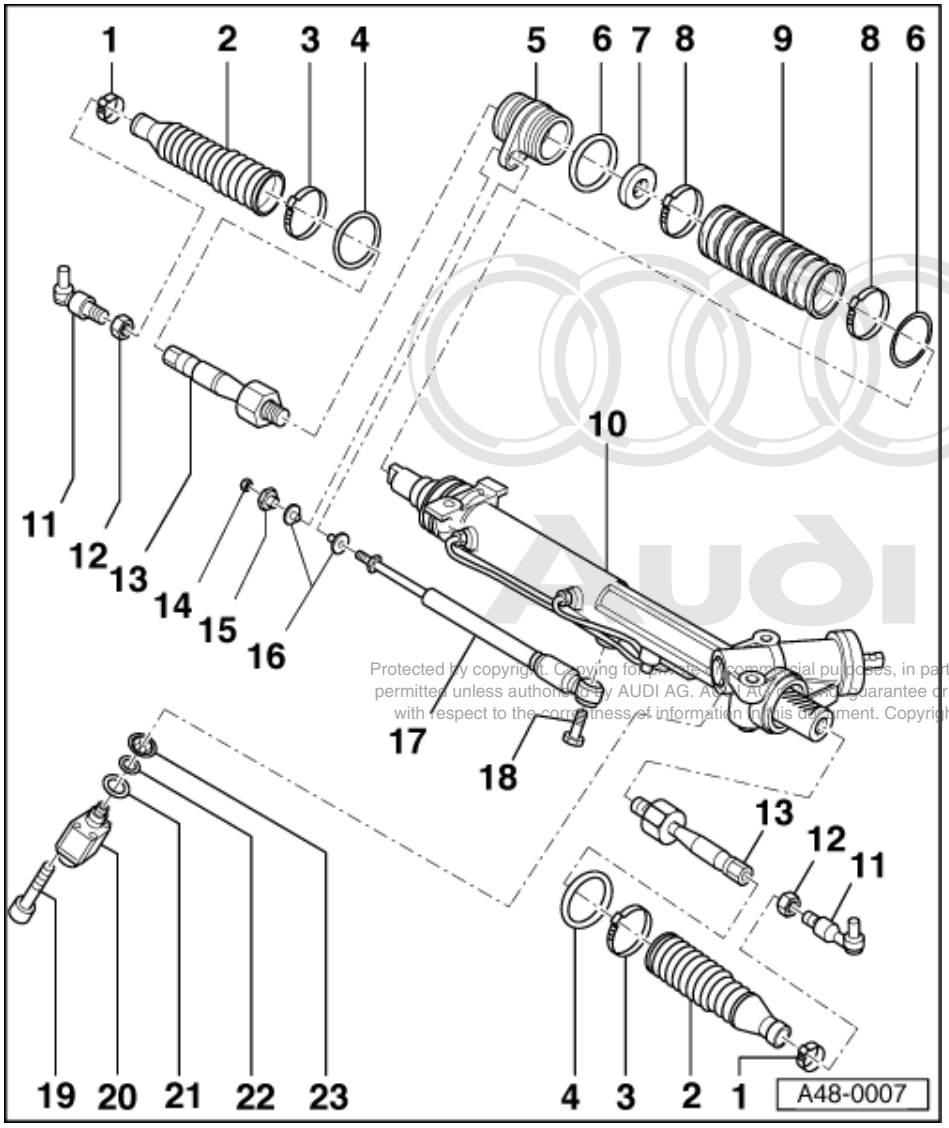

This overview represents LHD and RHD vehicles

1 Clip
- Always replace
- Tension using V.A.G 1275 => Fig.1

2 Boot
- Check for damage
- Must not be twisted after adjusting toe
- To replace remove track rods => Page 310

3 Clip
- Always replace
- Tension using V.A.G 1275 => Fig.1

4 O-ring
- Always replace

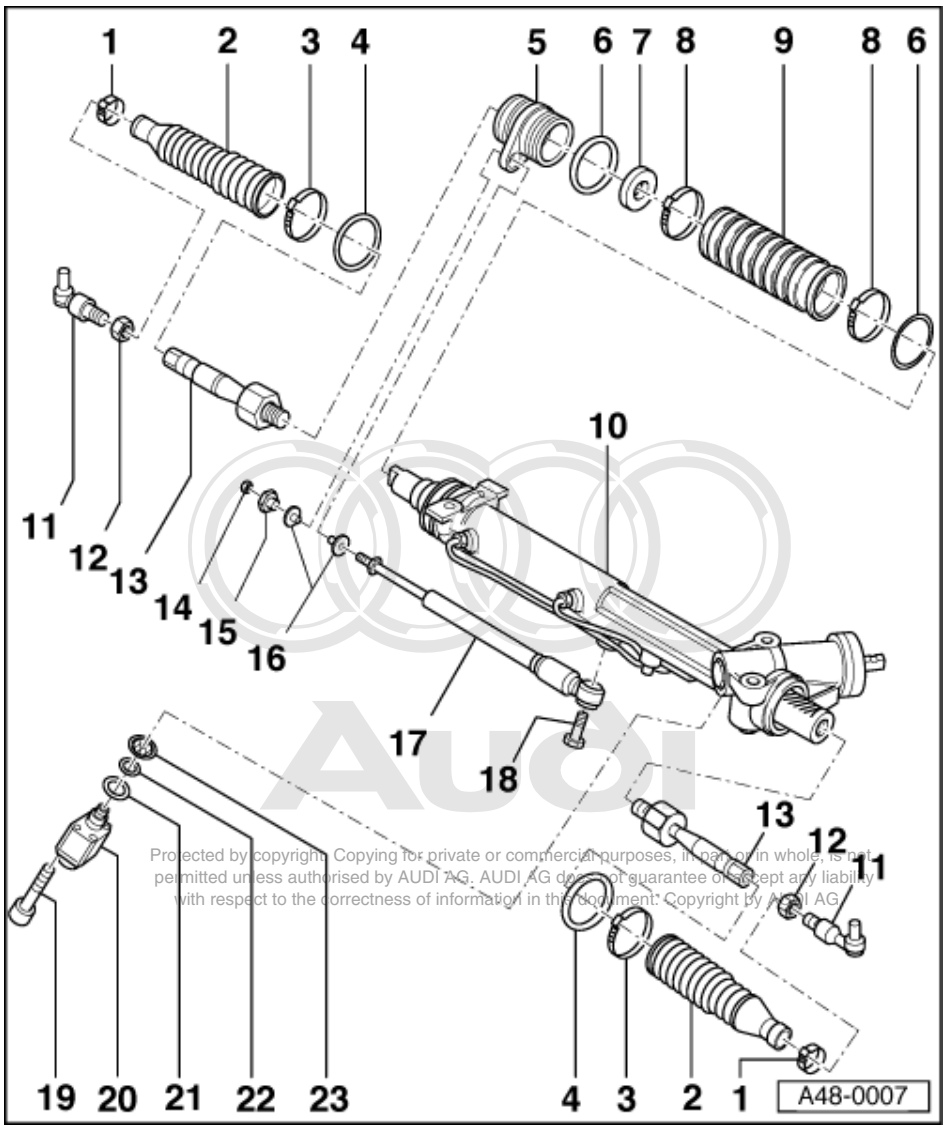

5 Steering damper bracket

6 O-ring

- Always replace

7 Dished washer

8 Clip

- Always replace
- Tension using V.A.G 1275 => Fig.1

9 Boot

- Check for damage
- To replace, remove power assisted steering box => Page 249
- Do not install reversed

10 Power-assisted steering box

- Grease rack with steering box grease A0F 063 000 04

11 Track rod end

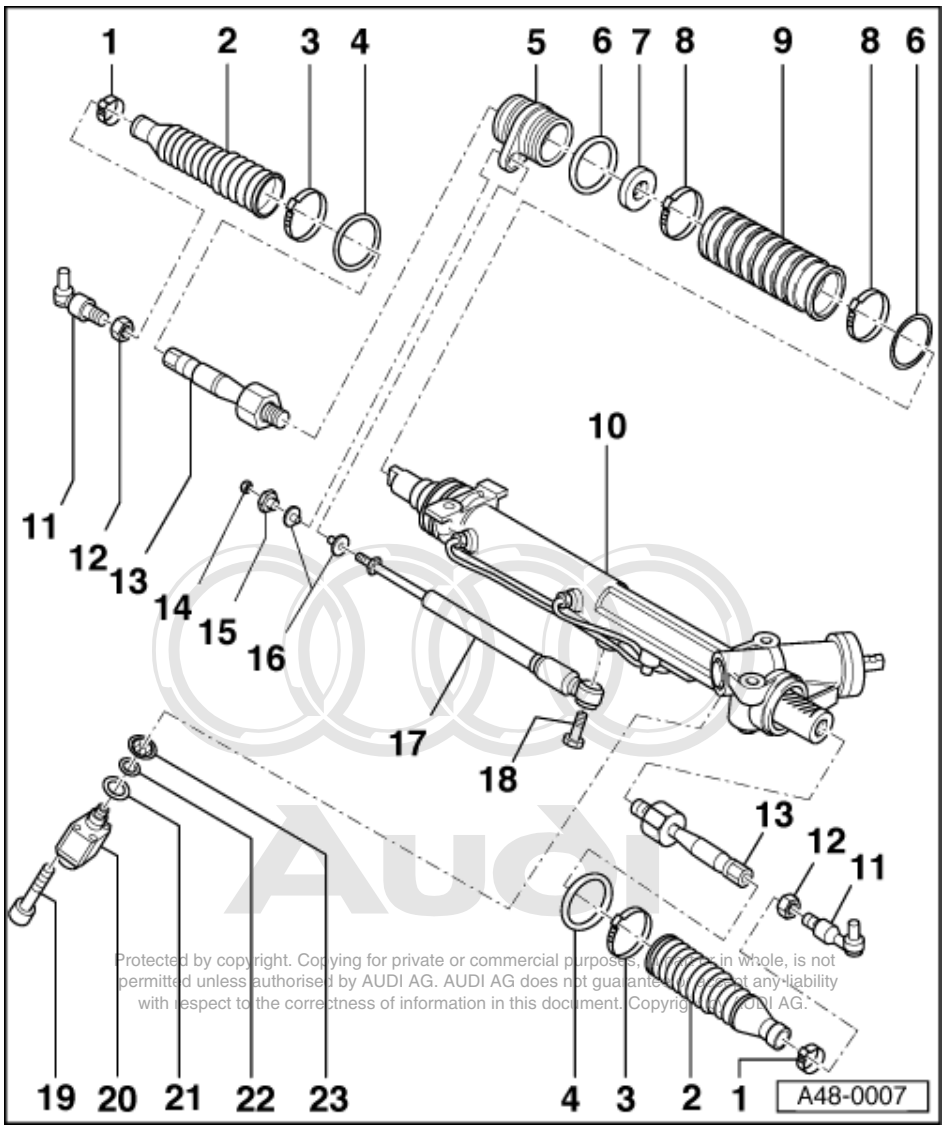

12 Hexagon nut, 40 Nm

13 Inner track rod joint, 100 Nm

- Grease joint with steering box grease A0F 063 000 04

14 Hexagon nut, 10 Nm

- To release and tighten, counterhold on hexagon of steering damper piston rod

15 Bush

16 Rubber bush

- Two-piece

17 Steering damper

18 Hexagon bolt, 40 Nm

- To loosen remove air duct between air filter and throttle valve unit.

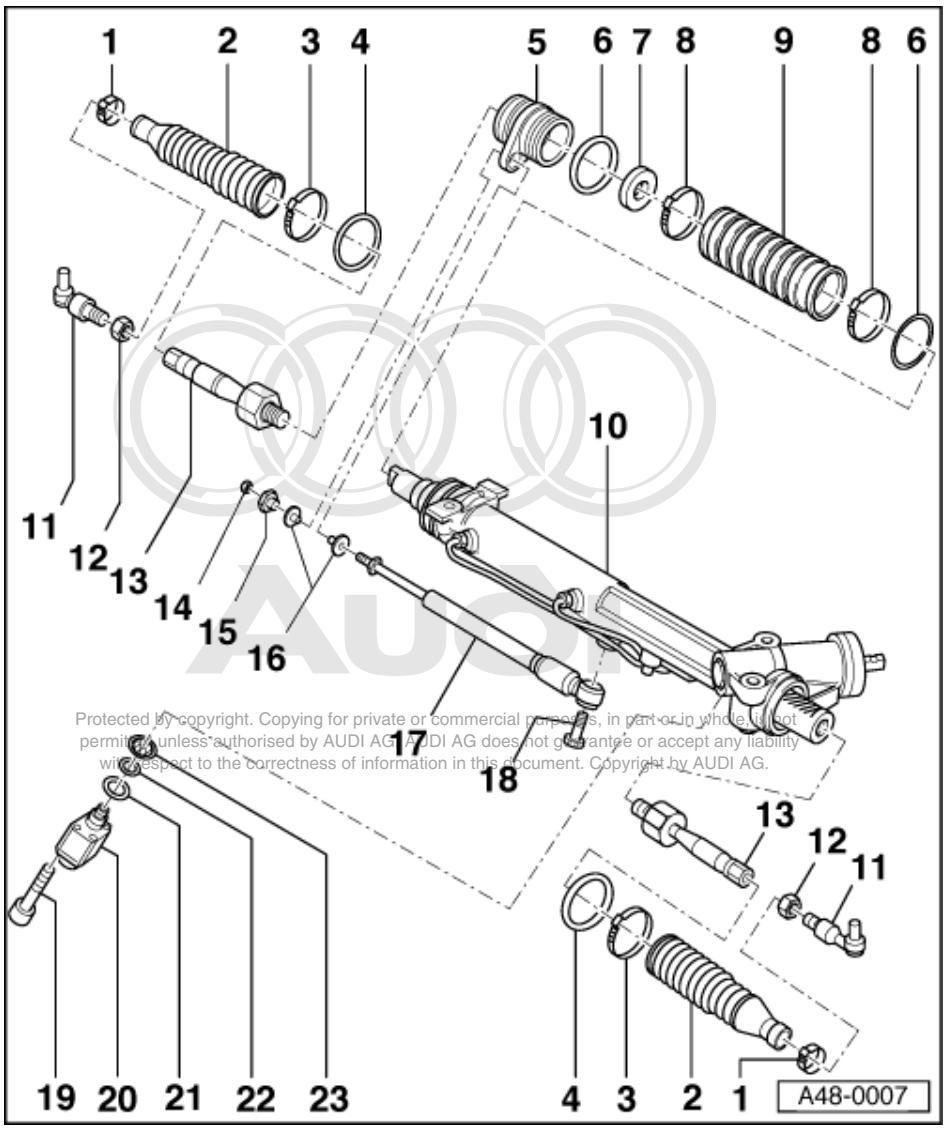

For steering box with Servotronic only:

19 Hexagon socket head bolt, 3 Nm
20 Servotronic solenoid valve (-N119)
- Checking valve => Page 315

21 O-ring
- Always replace

22 O-ring
- Always replace

23 Strainer

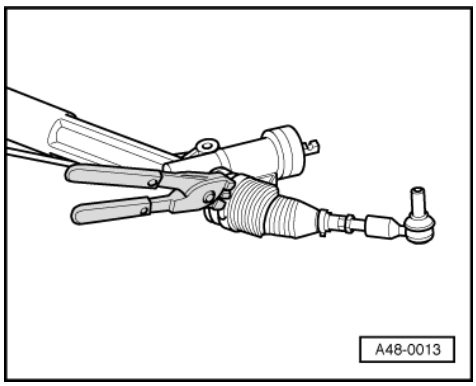

-> Fig.1 Tensioning clamp with V.A.G 1275

7 - Assembly overview: Power-assisted steering box, RHD vehicles

7.1 - Assembly overview: Power-assisted steering box, RHD vehicles

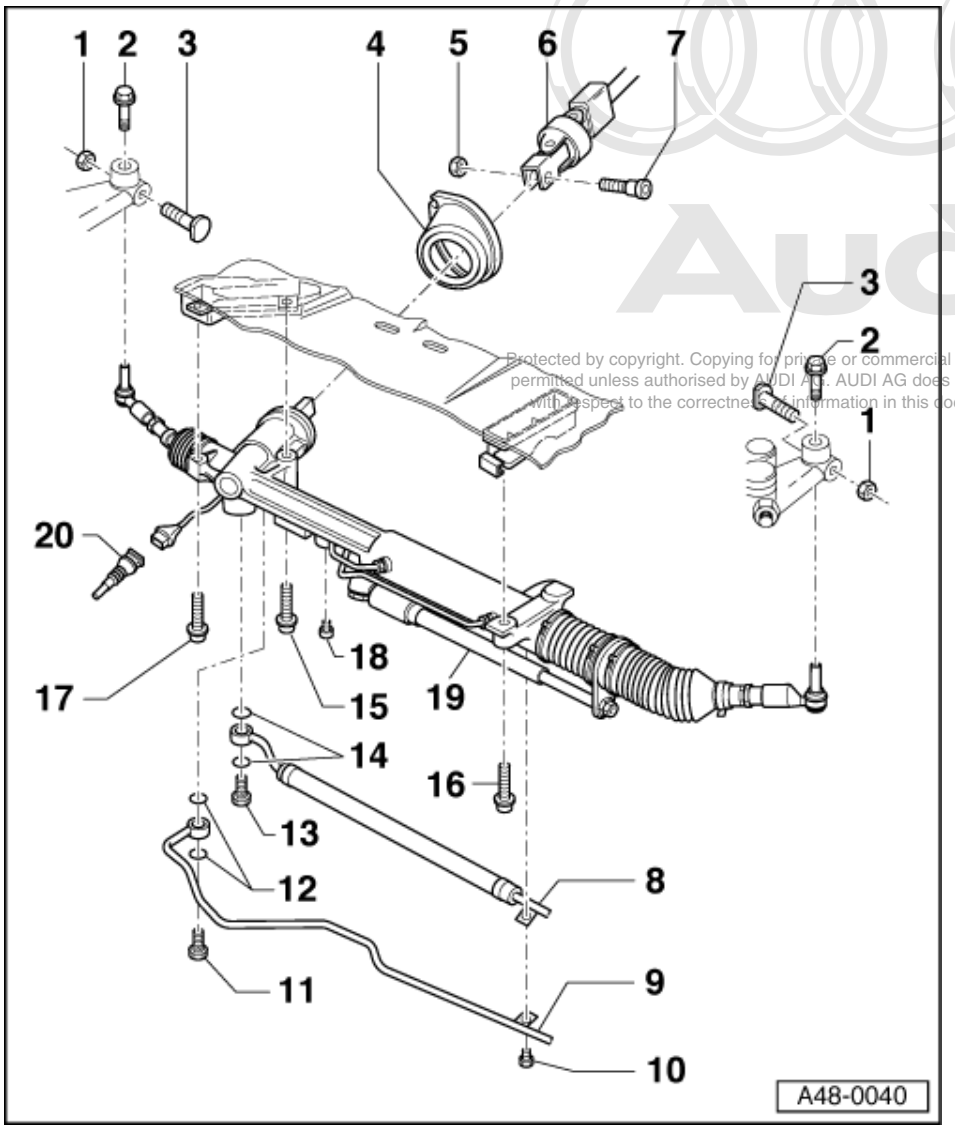

The power assisted steering box is removed and installed complete with track rods, steering damper and sections of the hydraulic lines.

1 Self-locking nut, 50
- Always replace

2 Combi bolt, 7 Nm
- For setting toe-in curve => Page 212

3 Bolt

4 Sealing boot
- Check for cracks and abrasion

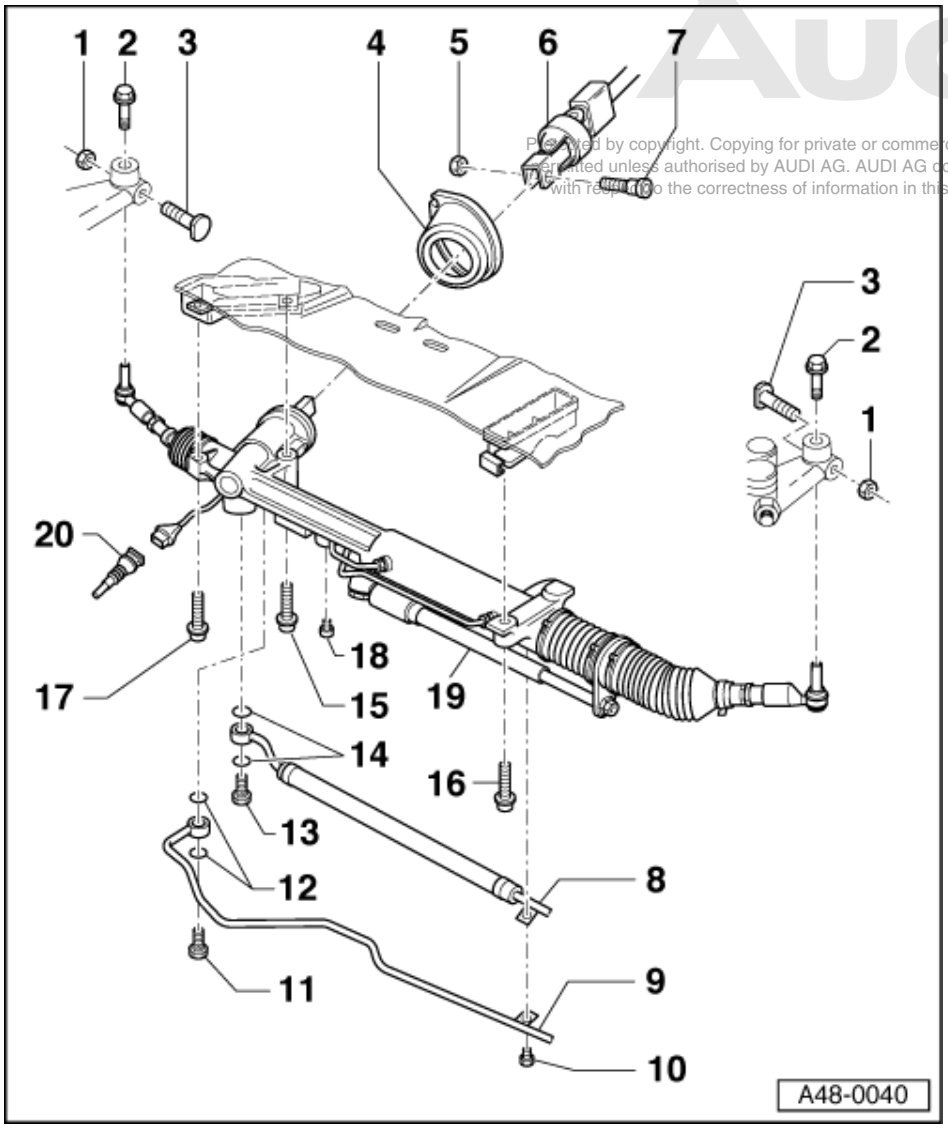

5 Self-locking nut, 40 Nm
- Always replace

6 Steering column

Note:

Never detach mesh section between top and bottom part of steering column.

Movement beyond a range of ± 5 cm can lead to damage to the steering column.

To avoid damage, please note Fig. 237 .

7 Eccentric bolt
- Turn clockwise to loosen
- Turn counter-clockwise to tighten

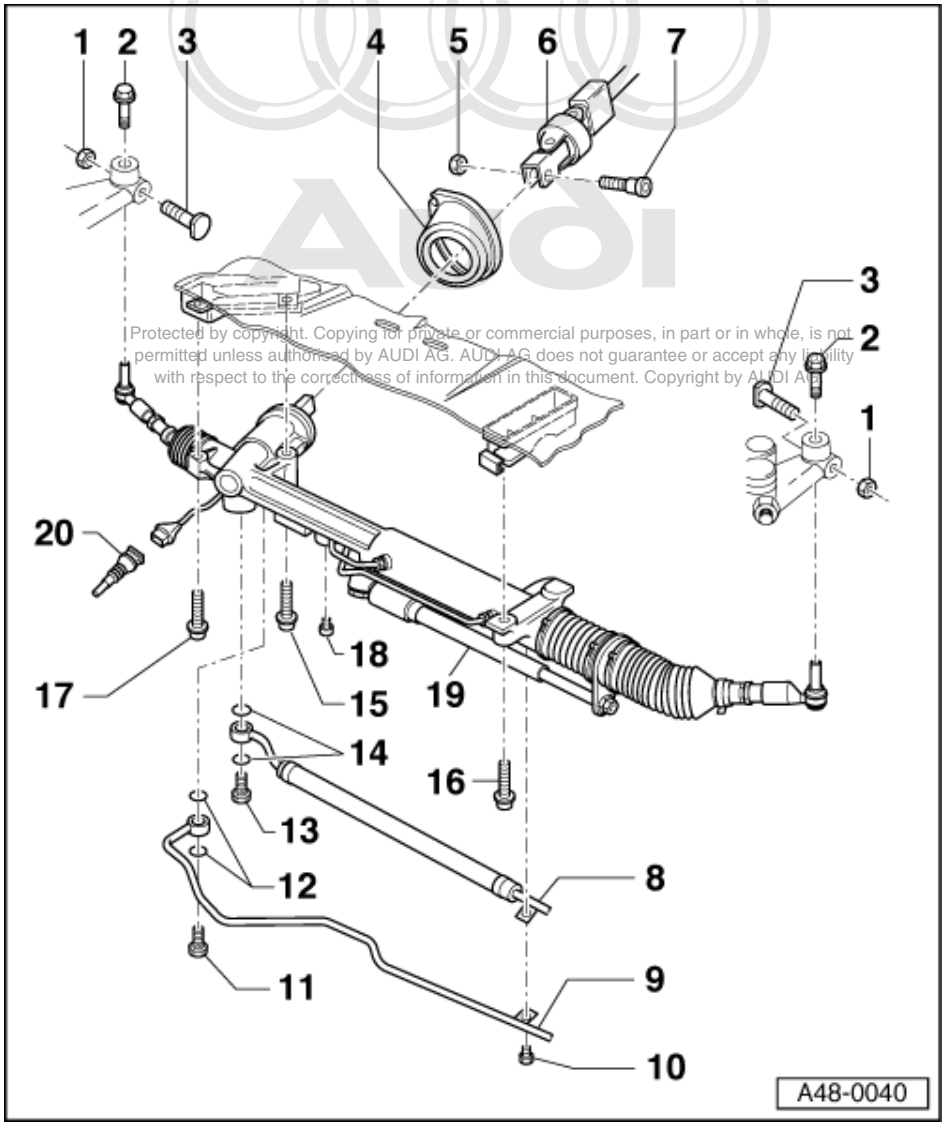

8 Return hose
9 Pressure pipe
- For 8-cyl.-vehicles, connected to expansion hose.
  Installation instructions => Fig. 1

10 Combi bolt, 20 Nm
11 Banjo bolt, 40 Nm
- With integrated non-return valve

12 Sealing ring
- Always replace

13 Banjo bolt, 47 Nm
14 Sealing ring
- Always replace

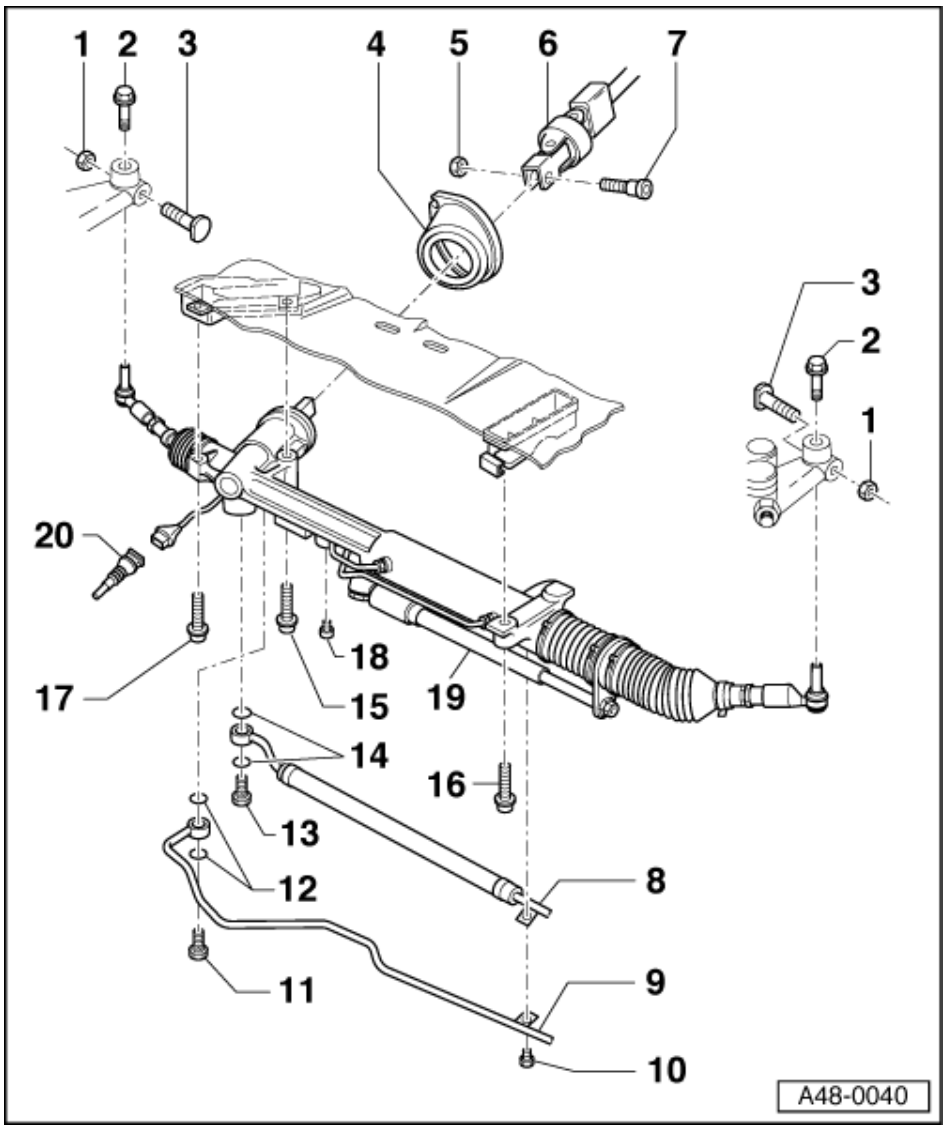

15 Combi bolt, 70 Nm
16 Combi bolt, 70 Nm
17 Combi bolt, 70 Nm
18 Cheese-head bolt, 12 Nm
- Screw plug for steering centring
  => Fig. 2 and 3

19 Power-assisted steering box with track rods
- In RHD vehicles, the steering box components are arranged laterally inverted to those of LHD vehicles.
- Removing and installing=>Page 302
- Servicing => Page 293

20 Connector for Servotronic
- Only in vehicles equipped with Servotronic

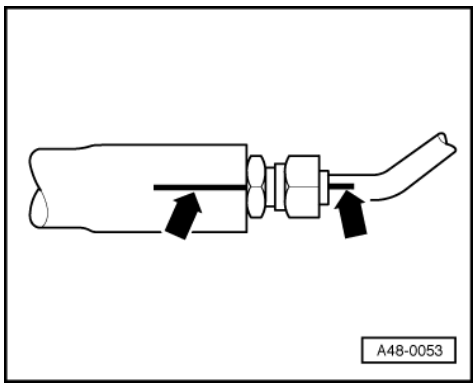

-> Fig.1 Installation instructions for expansion hose/pressure pipe

The coloured markings on expansion hoses and pressure pipes must be aligned.

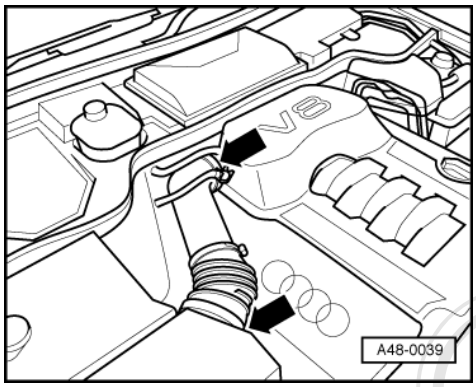

-> Fig.2 Installation of steering centring

The screw plug for the steering centring is accessible between the air cleaner and throttle valve following removal of the air duct hose.

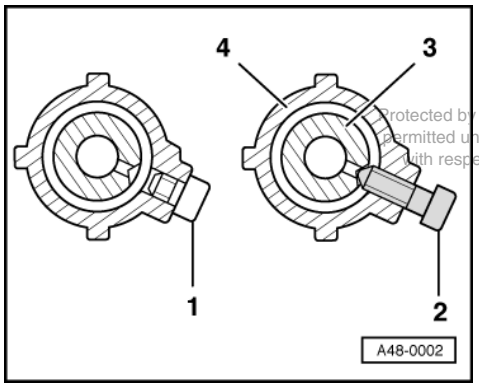

-> Fig.3 Steering centring

Steering box in cutaway view:

1 - Screw plug, 12 Nm
2 - Workshop equipment -V.A.G 1907- to be screwed in by hand as far as possible
3 - Rack

4 - Steering box housing

- Move the steering wheel slightly to the left and right of centre position.
- A second mechanic turns the -V.A.G 1907- into the steering box until engagement of the centring hole can be felt.

7.2 - Removing and installing power-assisted steering box, RHD vehicles

Removing

- Disconnect battery.

=> Electrical System; Repair group 27; Battery Battery

Important Bring steering wheel to centre position and do not turn whilst performing repair work, as otherwise coil connector of airbag unit could be damaged.

- Remove ignition key with steering wheel centred.

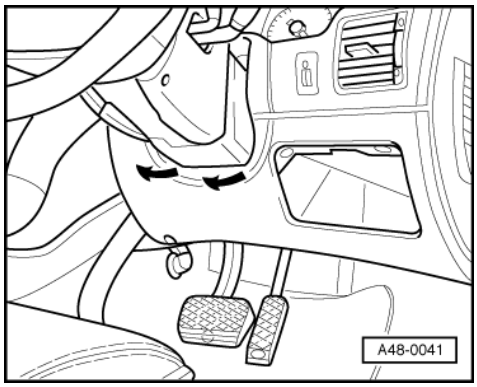

- Move steering wheel slightly so that the steering lock engages.
- -> Lever off lower surround, see arrows.

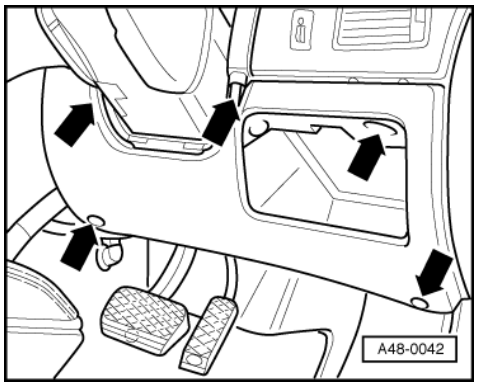

- -> Unscrew cover, see arrows
- Remove the steering column in the area of the air duct pipe and unplug the connector from footwell illumination.

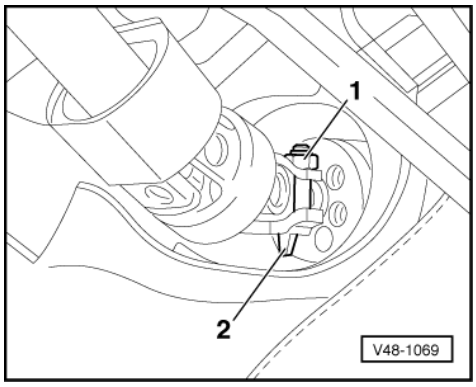

- -> Unscrew nut -1- at universal joint.
- Relieve tension on eccentric by turning tensioning bolt clockwise and remove bolt.

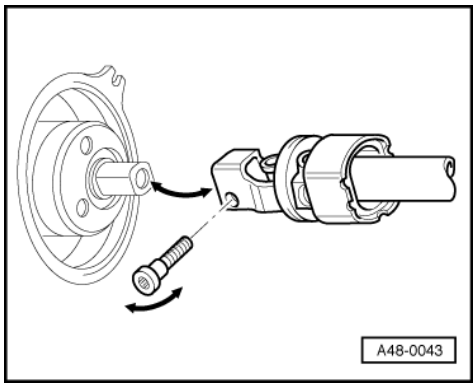

Secure steering column against sliding apart => Page 240

- -> Swivel the universal joint downwards out of the way.
- Remove sealing boot towards inside.

Note:

If sealing boot is damaged always install a new one.

Ensure sealing boot is correctly positioned.

The coarse thread locating pin on the bulkhead must engage in the sealing boot rim aperture.

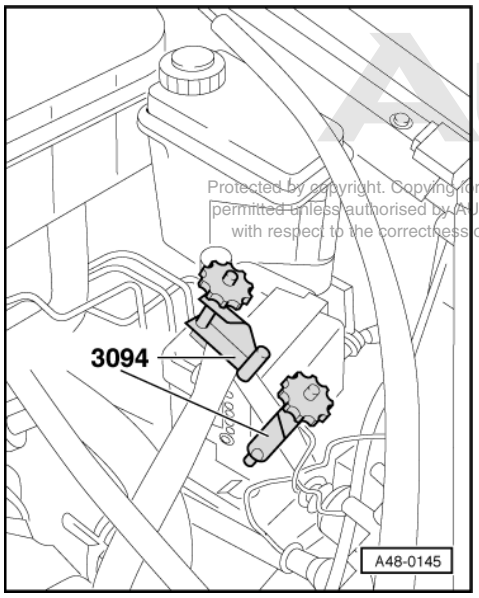

- Detach front wheels.
- -> Pinch off suction and return pipes with hose clamps -3094-.

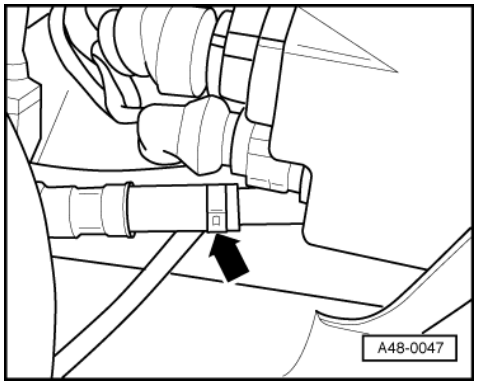

- -> Detach hose clamp from return hose at fluid cooler

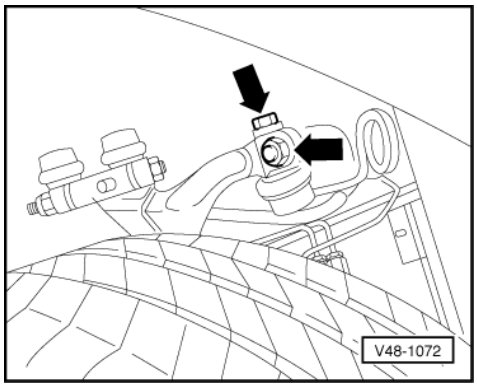

- -> Loosen track rod end bolts and push track rod end out of way in downwards direction.

This page only applies to vehicles with 6-cylinder engine:

- Place pan underneath to catch hydraulic fluid.

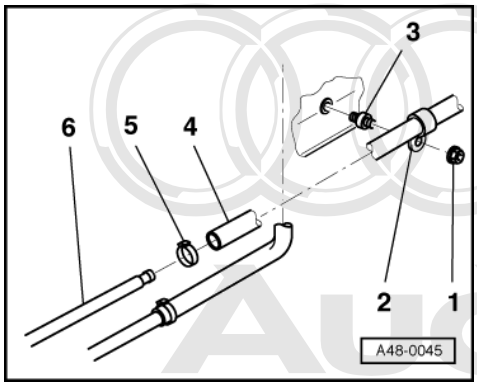

- -> A clamp is attached to the longitudinal member in the left wheel housing.
- Remove the hexagon nut -1-.
- Release the clamp -5- and disconnect the return hose.

1 - Hexagon nut, 5 Nm
2 - Clamp
3 - Rubber bush
4 - Return hose
5 - Clamp

6 - Fluid cooler line

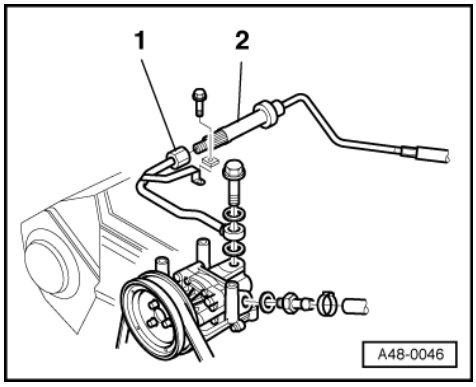

- -> Remove engine cover.
- Detach the expansion hose from the pressure pipe.

1 - Pressure pipe
2 - Expansion hose

This page only applies to vehicles with 8-cylinder engine:

- Place pan underneath to catch hydraulic fluid.

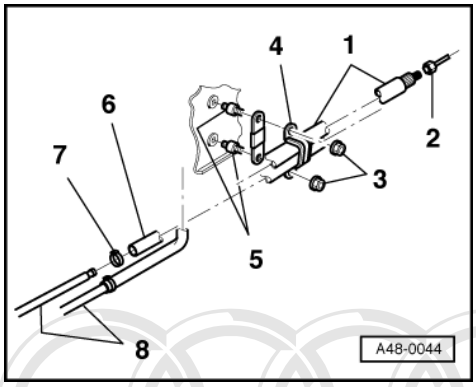

- -> A clamp is attached to the longitudinal member in the left wheel housing.
- Remove the hexagon nuts -3-.
- Detach the expansion hose from the pressure pipe.
- Release the clamp -7- and disconnect the return hose.

1 - Expansion hose
2 - Pressure pipe
3 - Hexagon nut, 5 Nm
4 - Clamp
5 - Rubber bush
6 - Return hose
7 - Clamp
8 - Fluid cooler line

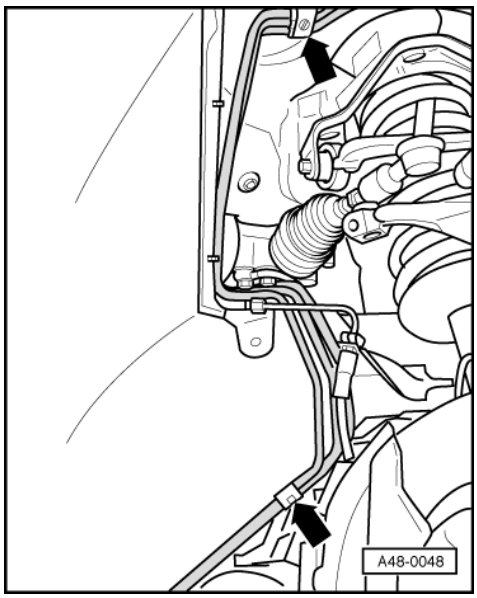

- -> Right side of vehicle:
- Detach plastic pipe in wheel housing.

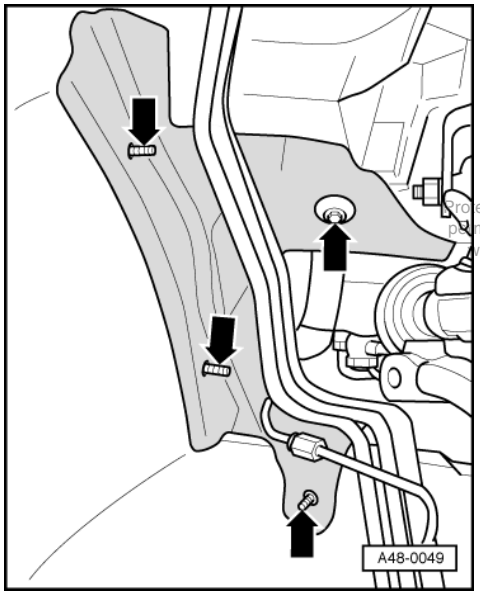

- -> Right side of vehicle:
- Detach the rear section of the wheel housing liner in the area of the insulating mat and remove the insulating mat.
- Push fuel lines downwards.

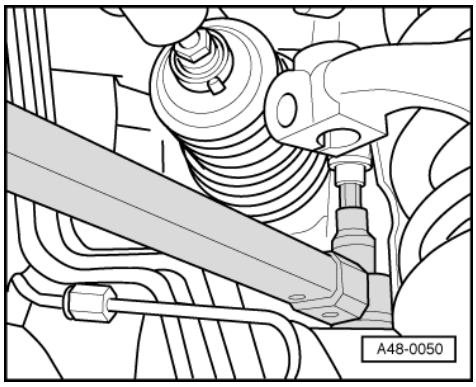

- -> Right side of vehicle:
- Remove both steering box securing bolts.
  - Us a universal joint with a 60cm extension for the rear bolt (not visible in illustration).
  - Using this tool, the bolt can be accessed from below, between the front exhaust pipe and the body-side heat shield.

Left vehicle side:

- Remove the steering box securing bolt.
  - Use a universal joint with a 60 cm extension. Using this tool, the bolt can be accessed from below, between the front exhaust pipe and the body-side heat shield.
- Free up steering box and mounting at plenum chamber lower end.
- Lever out the steering box together with the hydraulic lines through the right track rod cutout, (second mechanic required).
  - Ensure that no boots, studs, etc are damaged during removal.

When installing, pay special attention to the following:

- Fix the steering box in the centred position before installation => Page 301 .
- Ensure free movement of hydraulic hoses.

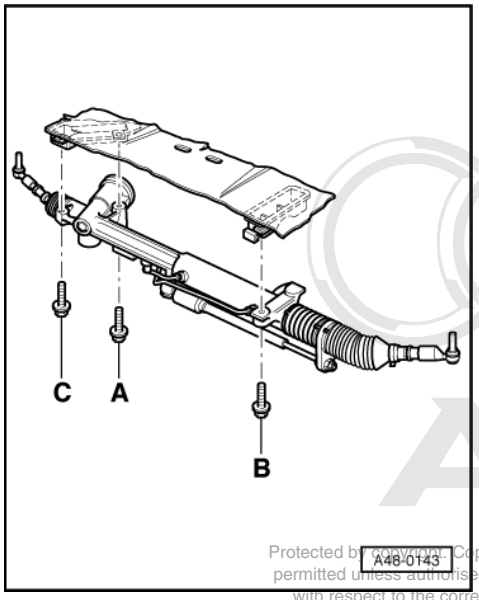

- Insert steering box into mounting at plenum chamber lower end.
- -> Tighten bolts in sequence A, B, C.
- Tightening torque: 70 Nm.

- Unlock the steering wheel lock and set the steering wheel in the horizontal position.

- Align the steering column free of tension to the steering pinion:

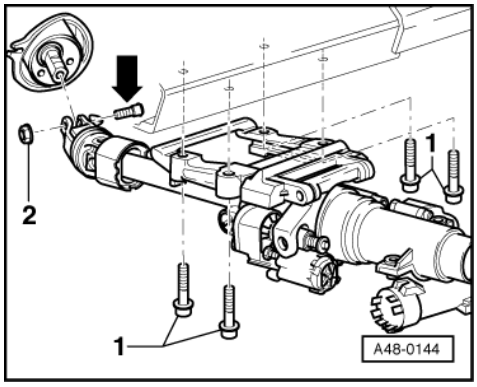

-> Detach the steering column to assembly support bolted connection -1-.

Install the steering column universal joint to the steering rack pinion.

Tension the eccentric bolt -arrow- in counter-clockwise direction and tighten the nut -2- to 40 Nm.

Re-tighten the bolted connection -1- to 20 Nm.

- Remove centring device -V.A.G 1907- and tighten closure bolt to 12 Nm.
- Bleeding steering system => 317
- Check hydraulic fluid level =>Page 316
- Check steering system for leaks =>Page 318
- Checking vehicle alignment => Page 212

7.3 - Servicing power-assisted steering, RHD vehicles

In RHD vehicles, the steering box components are arranged laterally inverted to those of LHD vehicles.

Servicing => Page 293

8 - Adjusting power-assisted steering box

8.1 - Adjusting power-assisted steering box

Two mechanics are required to perform adjustment. Adjust with engine switched off.

- Lift vehicle on lifting platform.
- Wheels in straight-ahead position.
- By turning the steering wheel back and forth (about 30°around centre axle) a rattling noise will be heard if there is excessive steering play.

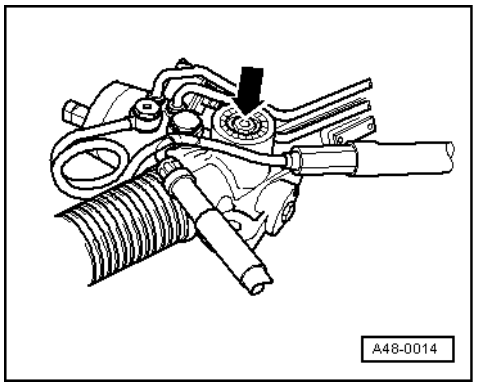

- -> The second mechanic should carefully turn the adjustment screw (arrow) until the rattling noise can no longer be heard inside the vehicle.
- Carry out a test drive.
- Ensure that when manoeuvring or negotiating corners the steering automatically returns smoothly to the straight-ahead position. Adjust setting if necessary.

9 - Removing and installing track rod end

9.1 - Removing and installing track rod end

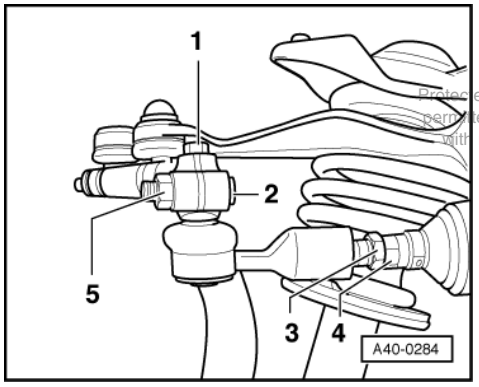

Removing

- Remove wheel
- -> Unscrew bolt -1- and remove.
  Tightening torque: 7 Nm

Note:

A protective cap may be pushed in place instead of the bolt.

- Loosen hexagon nut -5- and remove bolt -2-.
  Always renew self locking nuts
  Tightening torque: 50 Nm

Note:

The slots in the wheel bearing housing must not be widened using a chisel or similar.

- Push track rod end away in downwards direction
- Loosen hexagon nut -3- and unscrew track rod end.
  Hexagon flange -4- at axial joint serves to counterhold
  Tightening torque: 40 Nm
- Remove all grease from track rod end and clamping bore in the wheel bearing housing.

Installing

Install in reverse order.

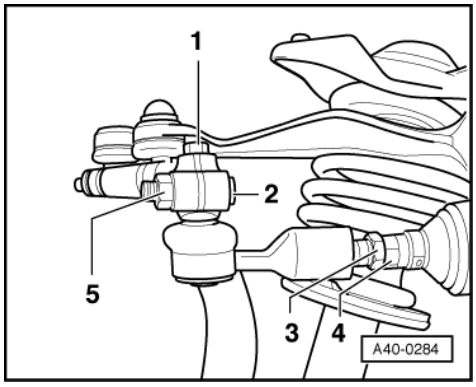

Perform wheel alignment after installation :

- Checking vehicle alignment =>Page 212
- -> First tighten clamping nut -5- to 50 Nm.
- Tighten hexagon bolt -1- to 7 Nm.

10 - Removing and installing track rod

10.1 - Removing and installing track rod

Special tools and workshop equipment required

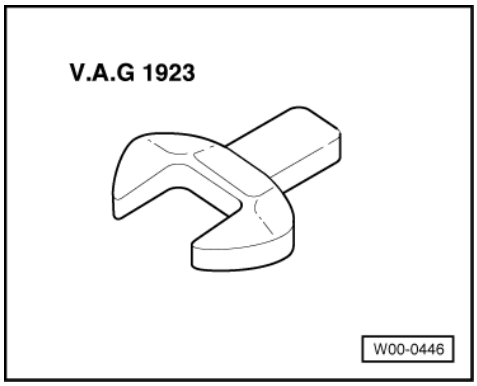

◆ V.A.G 1923

Left and right track rods are identical.

They can be removed and installed with steering box installed.

Removing

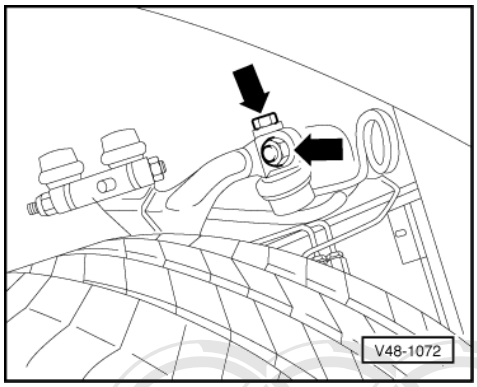

- -> Loosen track rod end and push out of way in downwards direction.

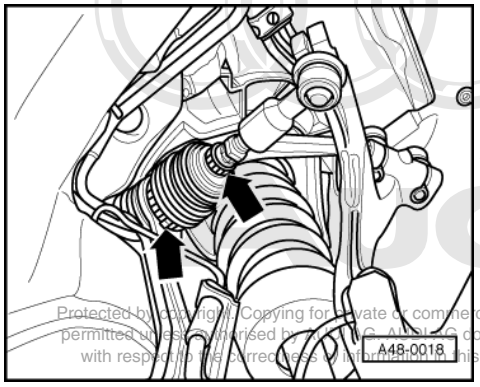

- -> Open clamps on bellows.

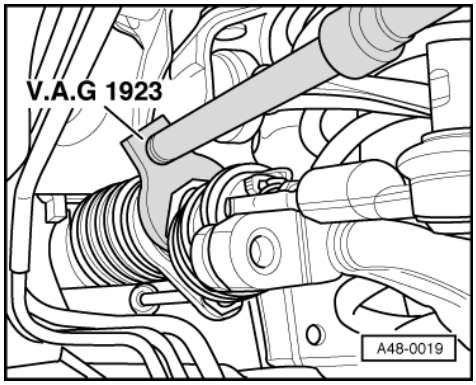

- Pull bellows outwards as far as possible.
- -> Unscrew track rod with V.A.G 1923.
- Depending on the extent of the damage, replace the bellows or track rods.

Installing

Installation is carried out in the reverse order.

- Checking vehicle alignment =>Page 212

11 - Assembly overview: Servotronic

11.1 - Assembly overview: Servotronic

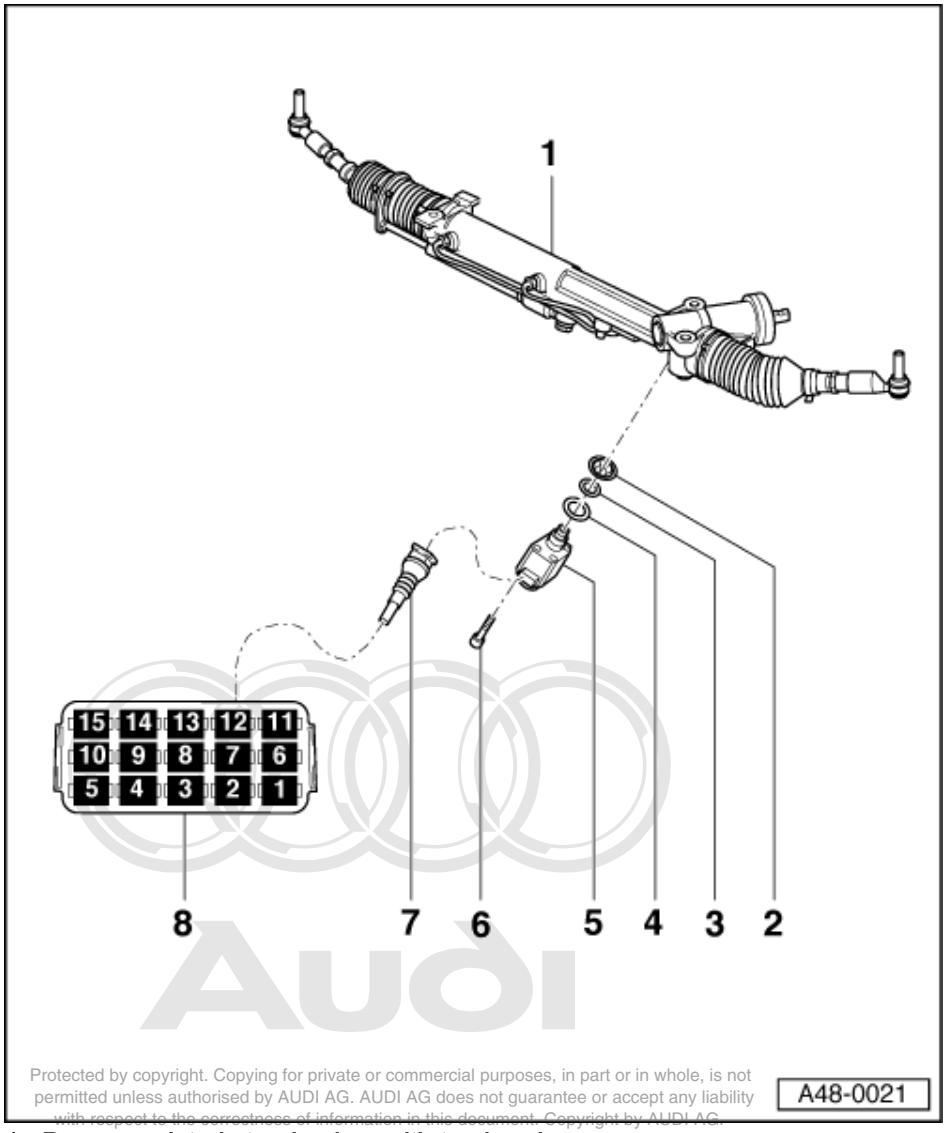

1 **Power-assisted steering box with track rods**
- Removing and installing
- LHD vehicles: => Page 249
- RHD models: => Page 298

2 **Strainer**

3 **Sealing ring**
- Always replace

4 **Sealing ring**
- Always replace

5 **Servotronic solenoid valve (-N119)**
- different versions
- To replace the Servotronic valve (-N119) the steering box must be removed
- Checking => Page 315

6 **Hexagon socket head bolt, 3 Nm**

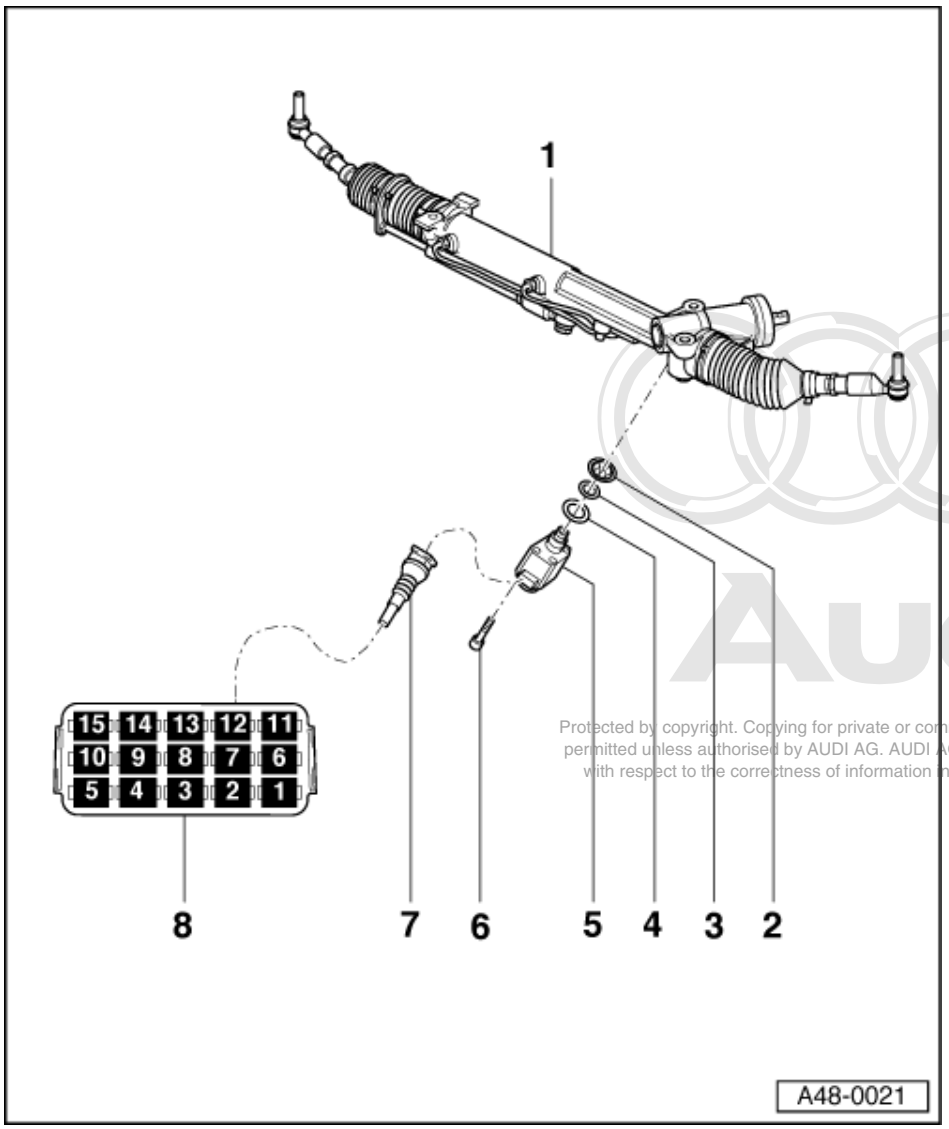

7 Connector for Servotronic

- Different versions
- To aid in installation and removal of the steering box on vehicles with Servotronic, the Servotronic-valve -N119 was equipped with a wire of approx. 80 cm length. The electrical connection for this wire is no longer equipped with a square plug but with a round plug instead.
- Both versions (square connector/round connector) are completely exchangeable as far as the steering box is concerned.
- When replacing the Servotronic steering box the Servotronic valve may need to be replaced according to the type of plug used.

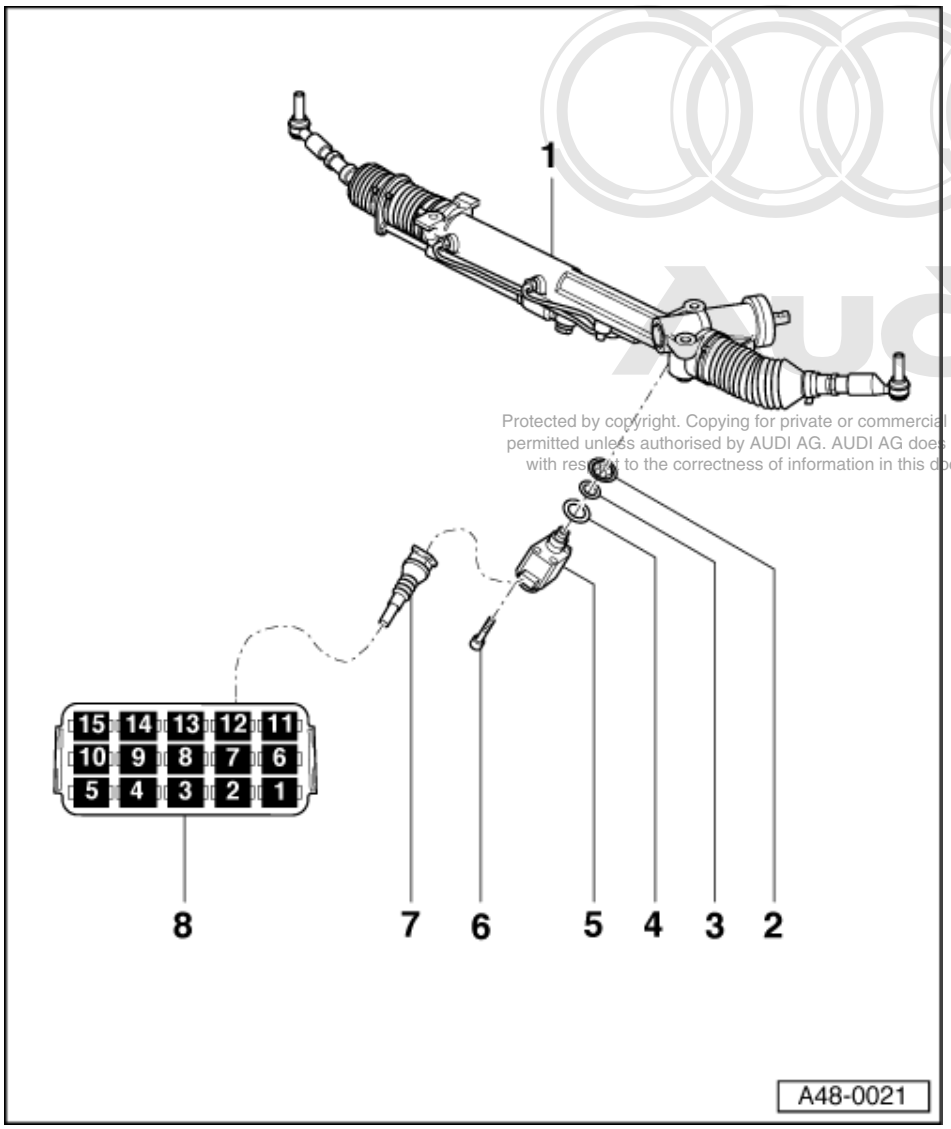

8 Relay carrier E

- Is located in the passenger side footwell box

=> Current Flow Diagrams, Electrical Fault-finding and Fitting Locations binder

- Relay for Servotronic -J236 (Pos. 12)
- Check power supply =>Page 315

11.2 - Servicing Servotronic

On vehicles fitted with Servotronic, assistance is controlled electronically as a function of vehicle speed. Should the electronics fail, the steering functions in the same manner as normal power-assisted steering. The relay for the Servotronic -J236- is not capable of self-diagnosis.

Fault table

Possible faults	Possible causes of fault	Fault remedy
- More than the normal steering effort being required to manoeuvre the vehicle. - The steering becoming unusually light at high vehicle speed.	- Open circuit in voltage supply - Open circuit of speed signal - Servotronic valve defective	- Check power supply => Page 315
- One-sided heaviness of power steering, e.g.: Steering moves easily towards the right and heavily towards left	- Hydraulic defect at power- assisted steering box	- Replace power- assisted steering box LHD vehicles: => Page 298

11.3 - Checking voltage supply for Servotronic

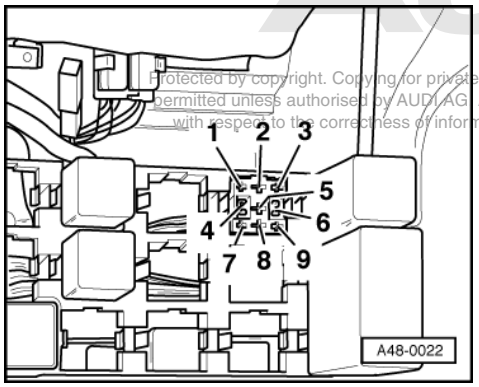

- Open box in passenger side footwell

=> Current Flow Diagrams, Electrical Fault-finding and Fitting Locations binder

- -> Detach relay for Servotronic -J236-, Pos. 12.
- Switch on ignition.
- Set digital multimeter -V.A.G 1526- to voltage measuring range up to 20 Volt.
- Measure at relay connector between contacts 6 and 8.
  Specified value: approx. 12 V.
- Check wiring if specified value is not attained.

=> "Current Flow Diagrams, Electrical Fault-finding and Fitting Locations" binder

11.4 - Checking Servotronic valve

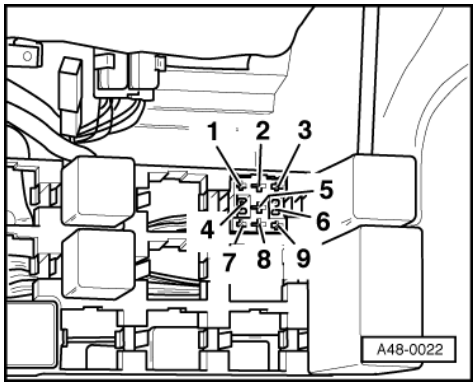

- Open box in passenger side footwell

=> Current Flow Diagrams, Electrical Fault-finding and Fitting Locations

- -> Detach relay for Servotronic -J236-, Pos. 12.
- Set digital multimeter -V.A.G 1526- to resistance measuring range up to 200 ohm.
- Measure at relay connector between contacts 2 and 5.
  Specified value: 6 to 12 ohm.

If specified value is not attained:

- Unplug connector from Servotronic valve.
- Check wiring between relay connector and plug for Servotronic valve for short circuit and open circuit.

=> Current Flow Diagrams, Electrical Fault-finding and Fitting Locations

- Replace Servotronic valve if wiring is OK.

11.5 - Checking speed signal

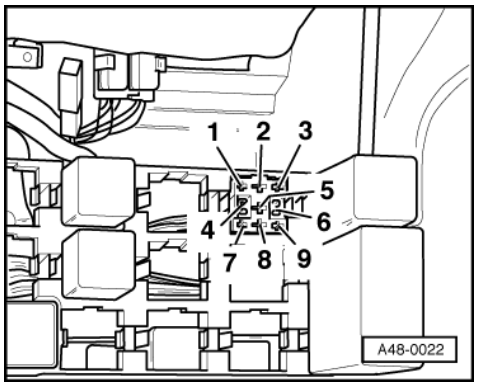

The vehicle speed signal comes from the instrument cluster.

- -> If power supply, Servotronic valve and vehicle speed display on speedometer are OK, check wiring between contact 4 and instrument cluster.

=> Current Flow Diagrams, Electrical Fault-finding and Fitting Locations

- Replace Servotronic relay if wiring between contact 4 and instrument cluster is OK.

12 - Checking fluid level, bleeding steering system and checking for leaks

12.1 - Checking fluid level, bleeding steering system and checking for leaks

12.2 - Checking fluid level of power-assisted steering

- Do not run engine and set front wheels to straight-ahead position.

Cold fluid:

- Unscrew cap.
- Wipe dipstick with a clean cloth.

- Screw in cap hand-tight and unscrew again.

The definitive fluid level is the one measured after screwing in the cap.

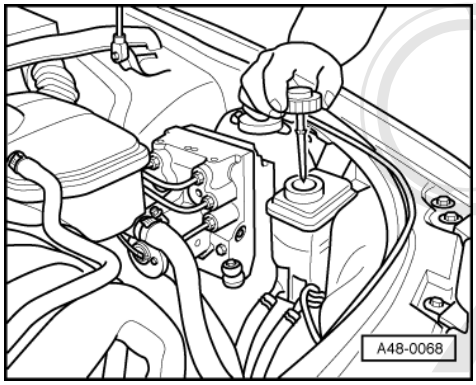

- -> Check fluid level: Level must be around MIN. mark (up to 2 mm above or below mark).

Fluid at operating temperature (above approx. 50 °C):

- -> Check fluid level: Level must be between MIN. and MAX. mark.

Notes:

- Fluid must be drawn off if the level is above the specified range.
- If the fluid level is below the range specified, the hydraulic system must be checked for leaks. It is then not sufficient to merely top up the fluid.
- Do not re-use hydraulic fluid which has been drained off.

12.3 - Steering system, bleeding after conversion

Depending on how extensive conversion procedures were on the steering system different bleeding procedures are to be employed on the steering system following these.

Following replacement of the entire steering system or replacement of the steering box:

- Check hydraulic fluid level and top up if necessary.
- Raise vehicle until front wheels are free.
- Start engine briefly (max. 2 seconds)

The pump must not draw in any air, the steering wheel must not be moved under any circumstances in the process.

Waiting interval between individual engine starts approx. 30 sec.

- Check hydraulic fluid level and top up if necessary.
- Repeat this procedure until the fluid level remains constant.
- Turn steering wheel from lock to lock 10 times, with engine switched off.
- Check hydraulic fluid level and top up if necessary.
- Start engine.
- Turn steering wheel from lock to lock 10 times.
- Check hydraulic fluid level and top up if necessary.

Any residual air in the steering system will dissipate automatically when driving (after approx. 10 - 20 km).

For conversion of one steering system component except the steering box (pump, hoses, etc.):

- Check hydraulic fluid level and top up if necessary.
- Start engine briefly (max. 2 seconds)

The pump must not draw in any air, the steering wheel must not be moved under any circumstances in the process.

Waiting interval between individual engine starts approx. 30 sec.

- Check hydraulic fluid level and top up if necessary.
- Repeat this procedure until the fluid level remains constant.
- Start engine and allow to run for approx. 2 - 3 minutes, do not turn steering wheel in the process.

Any residual air in the steering system will dissipate automatically when driving (after approx. 10 - 20 km).

12.4 - Checking steering system for leaks

- Start engine.
- Turn steering from lock to lock in both directions and hold briefly.

  This builds up the maximum possible pressure.

To avoid damaging the pump, never run the engine for more than 10 seconds when performing this test.

The following components must be checked for leaks in this position:

- Steering pinion sealing ring on valve housing of steering box.
- All pipe connections.
- Rack sealing rings

  This test can only be carried out with the bellows pushed back.
  - Open hose clamp for bellows.
  - Push bellows back.

  Steering box must be replaced if fluid is visible in steering box housing and/or in the bellows.

13 - Assembly overview: Power steering/fluid circuit for 6-cylinder, 2-valve petrol engine

13.1 - Assembly overview: Power steering/fluid circuit for 6-cylinder, 2-valve petrol engine

General information

Servicing of vane pump is not envisaged. In the case of complaints, determine the cause by means of a pressure test and leak test. If a fault is detected, replace the vane pump.

With the exception of the continuation of the hydraulic system pipes from left to right on the steering box, the fluid circuit of RHD vehicles corresponds to that of the LHD version.

Notes:

- Check steering system for leaks if there is a lack of fluid in the reservoir.
- If a leak is found in the area of the pipe connections, first check pipes/pipe connections for leaks, re-tighten if necessary and wipe dry.
- Replacement pumps are not filled with fluid. Prior to installation these must always be filled with hydraulic fluid G 002 000 and cranked by hand to avoid possible noise whilst driving or pump damage.

- Type of fluid: Hydraulic fluid G 002 000

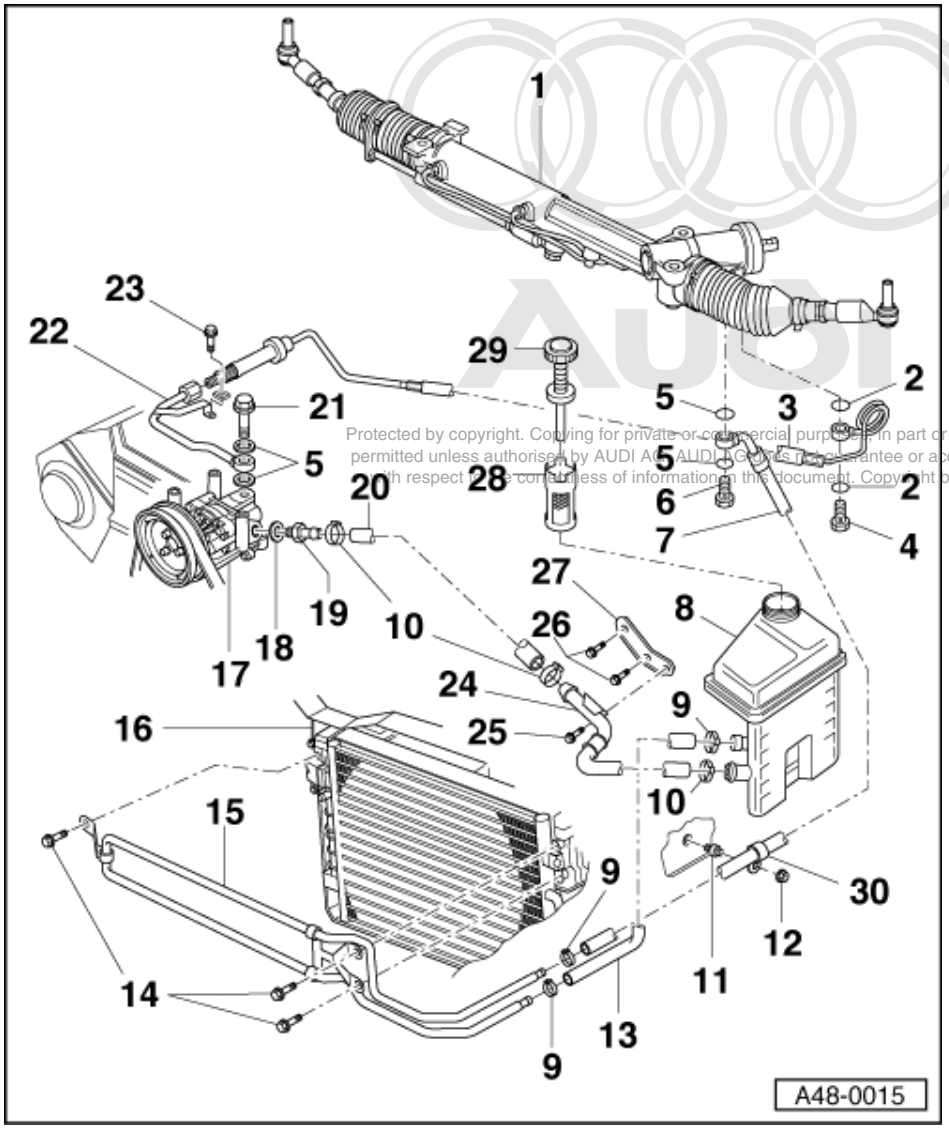

When fluid circuit has been opened always:

- Check all unions for leaks, start engine and perform visual inspections.
- Check fluid level =>Page 316

1 Power-assisted steering box
  - Assembly overview:
  - Left-hand drive => Page 249
  - Right-hand drive => Page 298
  - Servicing => Page 293

2 Sealing ring
  - Always replace

3 Expansion hose
  - Section with pipe, runs to steering box

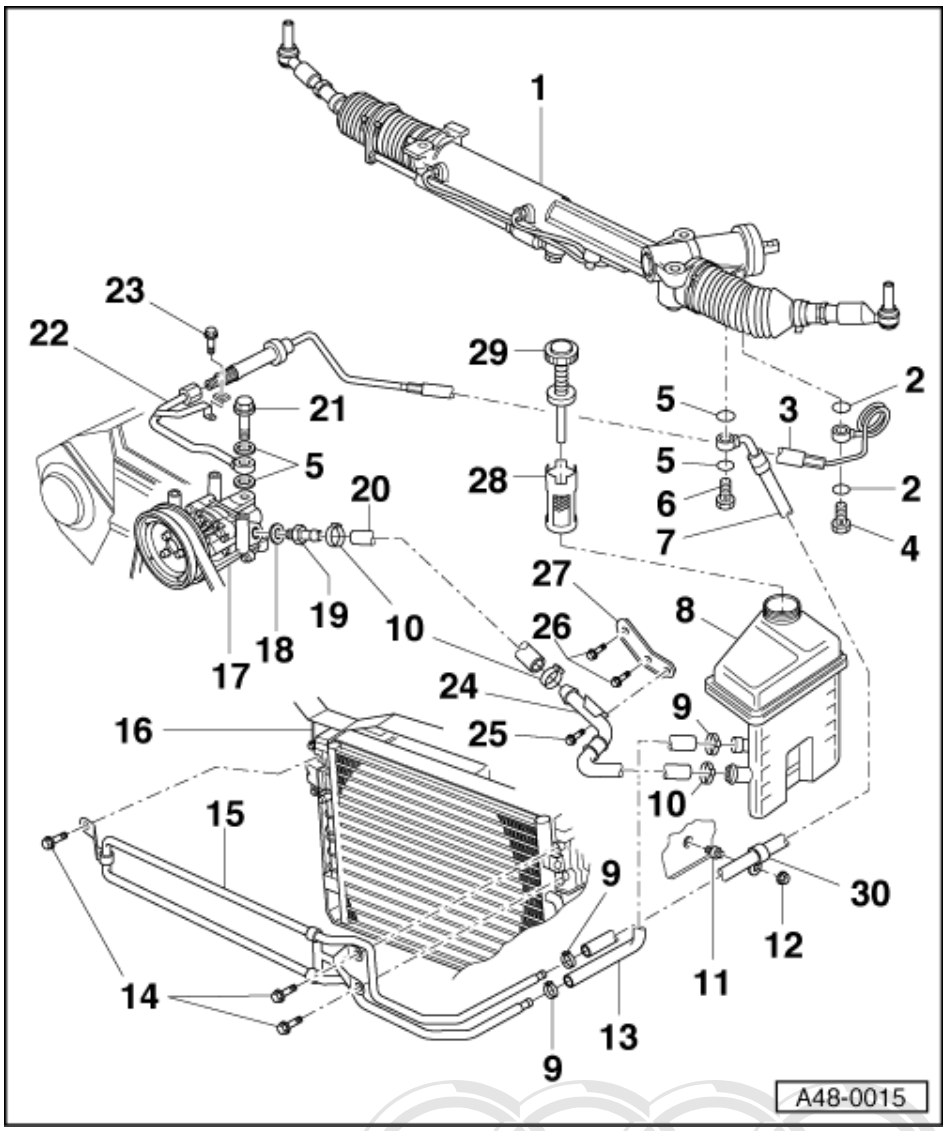

4 Banjo bolt, 40 Nm
- With integrated non-return valve

5 Sealing ring
- Always replace

6 Banjo bolt, 47 Nm

7 Return hose

8 Expansion tank
- Refilling with hydraulic fluid, Part No. G 002 000, filling quantity 1.2 litres
- Plugged into hydraulic unit bracket
- Check fluid level =>Page 316

9 Clip
- Always replace
- Tensioning => Page 48-113
- Can also be replaced by screw-type hose clamp

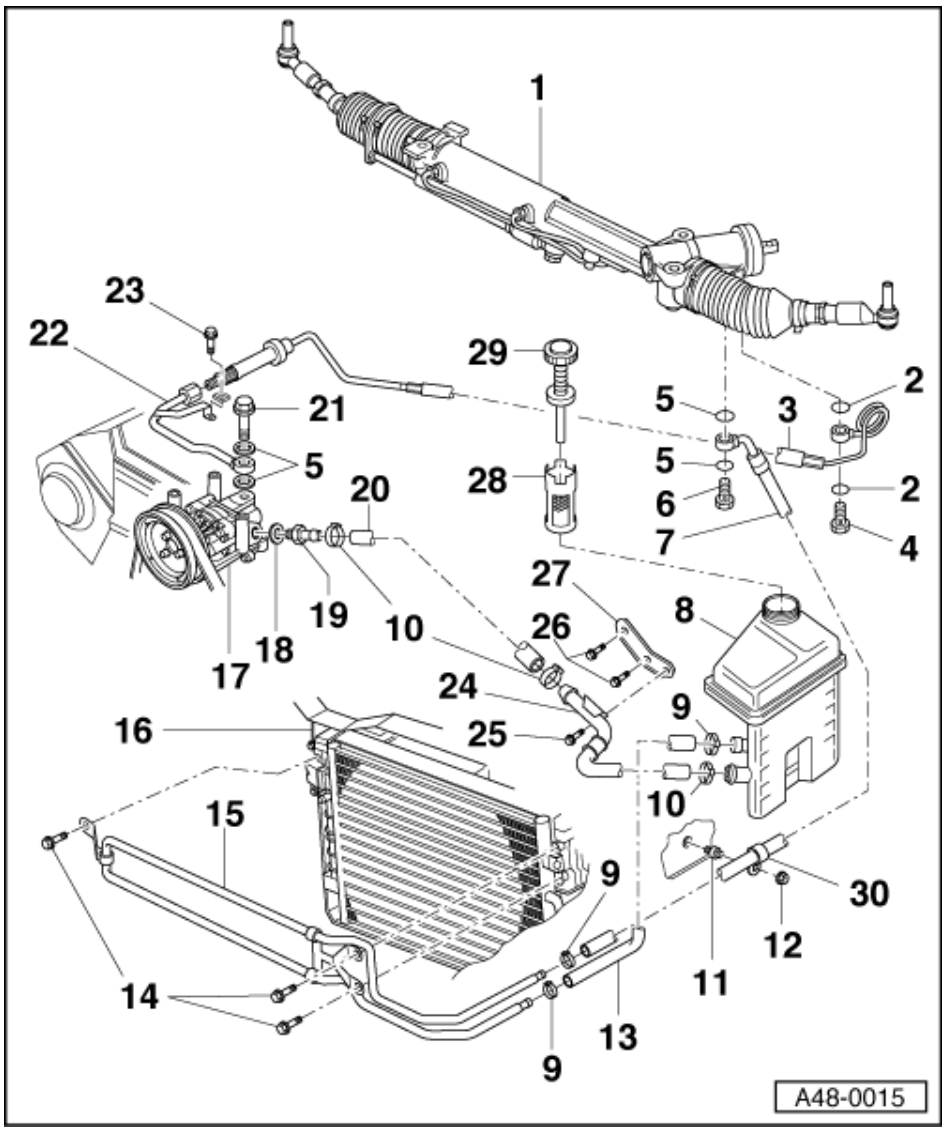

10 Clip
- Always replace
- Tensioning => Page 48-113
- Can also be replaced by screw-type hose clamp

11 Bonded rubber bush

12 Hexagon nut, 5 Nm

13 Return hose
- Fluid cooler - expansion tank

14 Combi bolt, 10 Nm

15 Fluid cooler
- Two versions with varying routing of lines.

16 Radiator

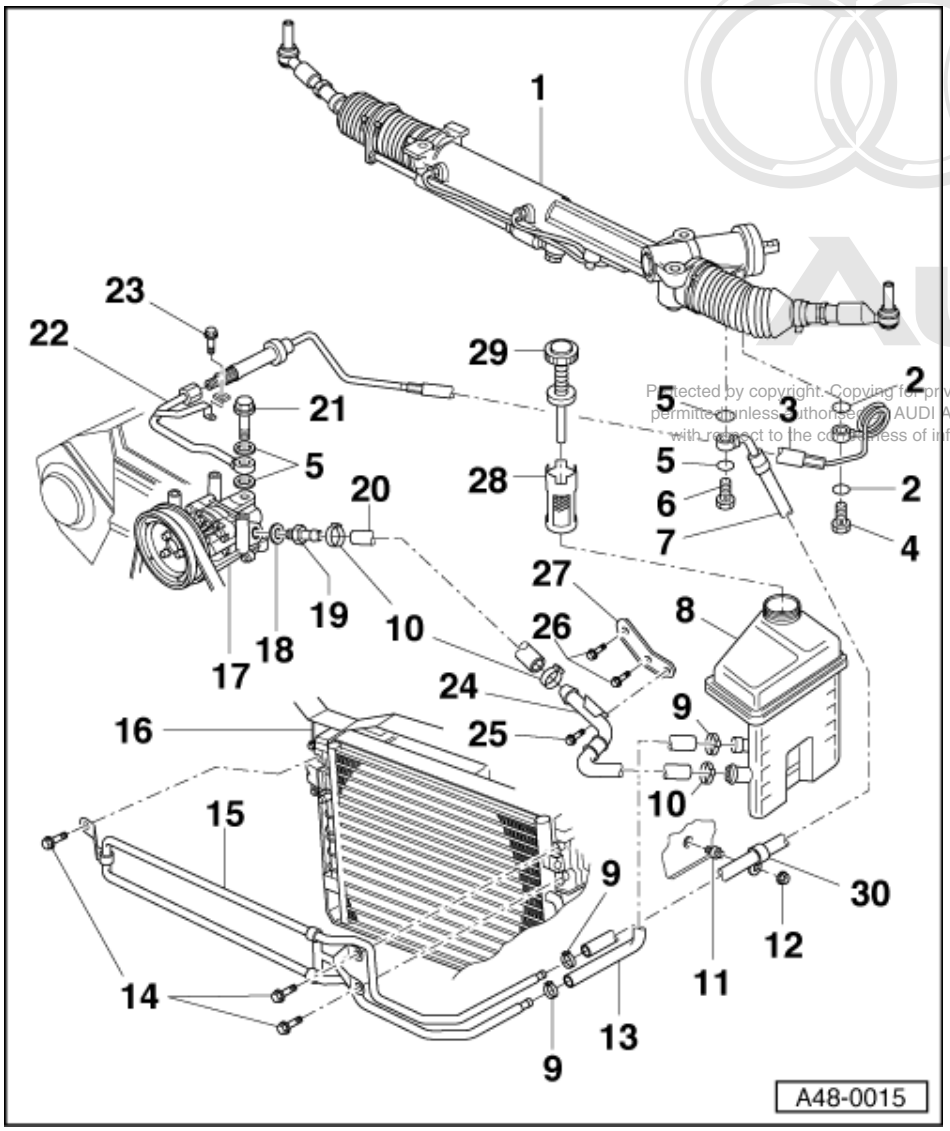

17 Vane pump

- Check delivery pressure => Page 324
- Removing and installing=>Page 327 .

18 Sealing ring

- Always replace

19 Screw fitting, 50 Nm

20 Suction hose

- Section piece

21 Banjo bolt, 47 Nm

22 Pipe, 40 Nm

- Screw to expansion hose; counterhold on hexagon of expansion hose.
- Screwed to intake manifold with hexagon bolt -Item. 23 -.

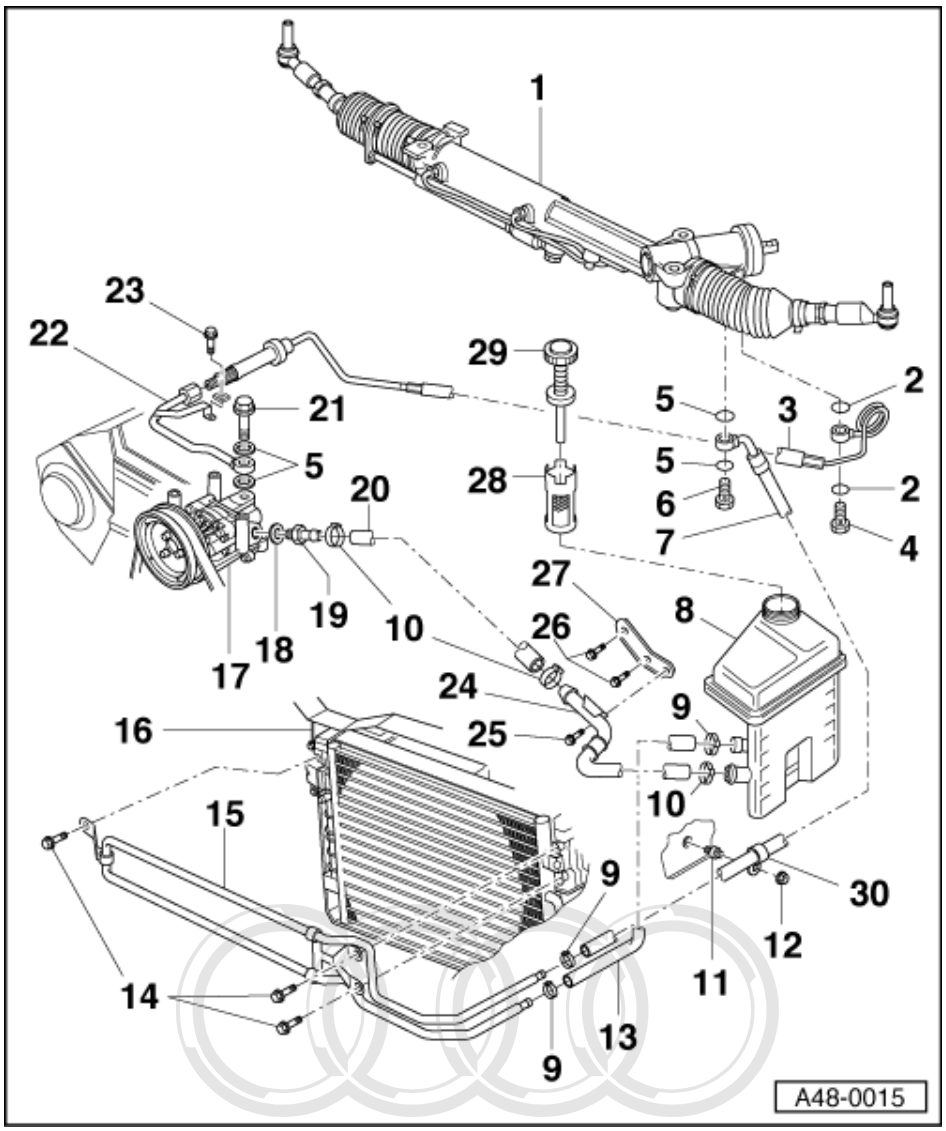

23 Combi bolt, 8 Nm

24 Suction hose

- Section piece with pipe

25 Combi bolt, 8 Nm

26 Combi bolt, 10 Nm

27 Bracket

- Screwed to cylinder head

28 Strainer for expansion tank

- Clean using solvent

29 Cap with dipstick

- Check fluid level =>Page 316

30 Clamp

13.2 - Checking supply pressure of vane pump

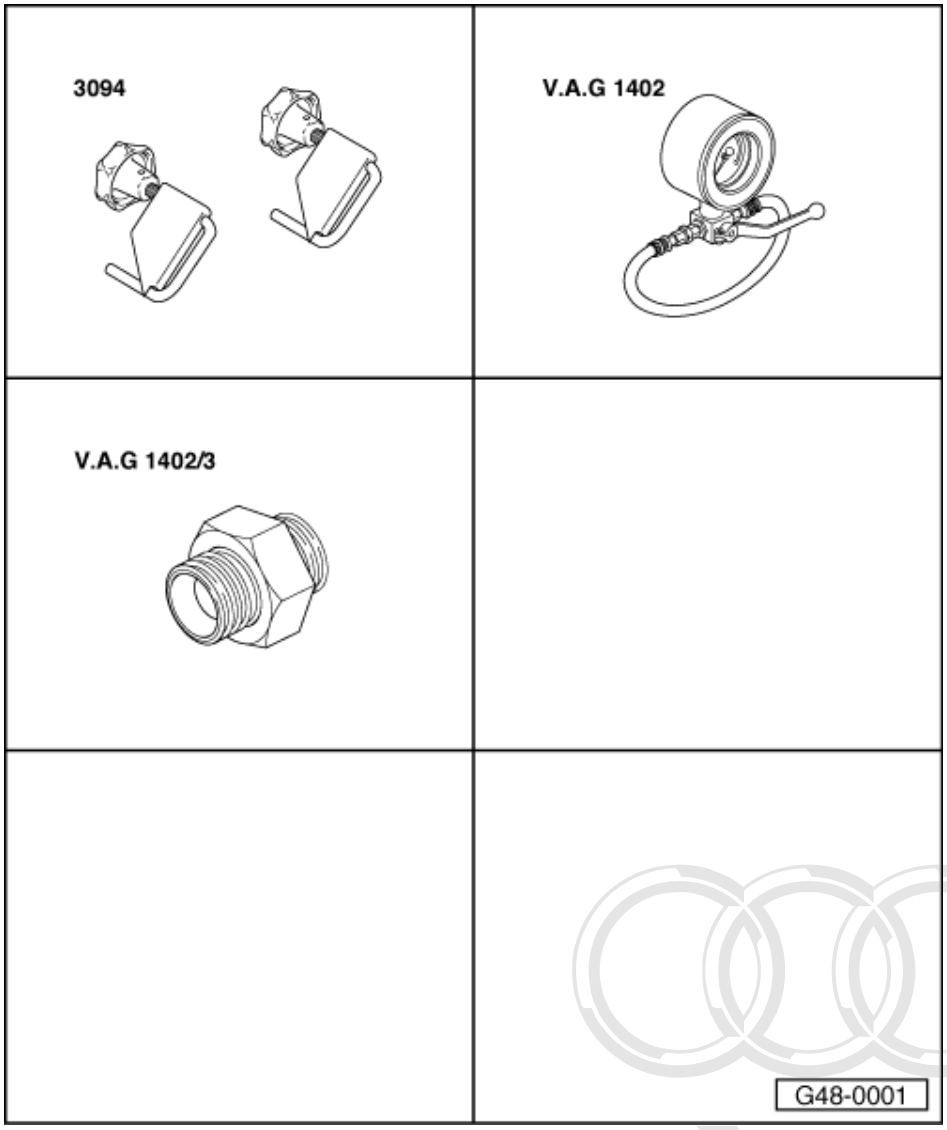

Vehicles with 6-cylinder 2-valve petrol engine

Special tools and workshop equipment required

- 3094 Hose clamp
- V.A.G 1402 Tester for power-assisted steering
- V.A.G 1402/3 Adapter

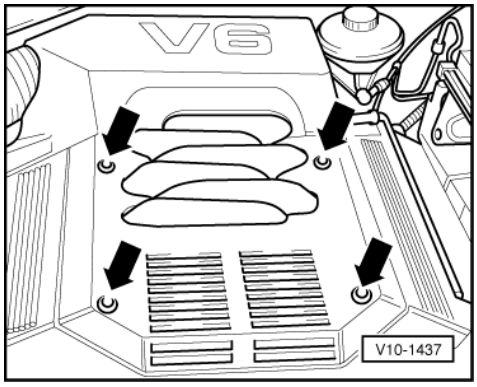

- -> Unclip motor cover at top and remove.

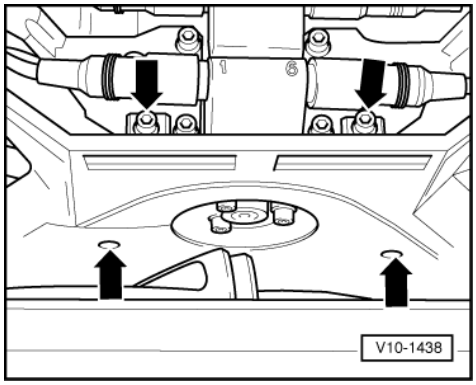

- -> Unscrew cover for ribbed belt

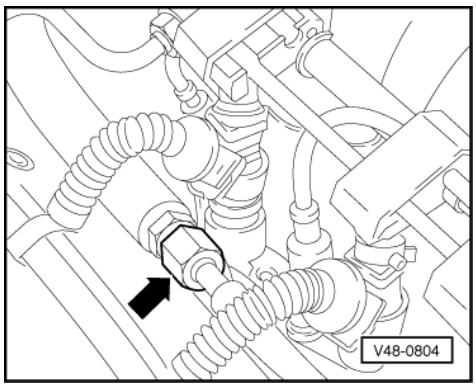

- Disconnect suction hose with hose clamp -3094-.
- -> Press spring clip for plug and remove plug from injector.
- Unscrew pipe from pressure hose (arrow); counterhold at hexagon of pressure hose.

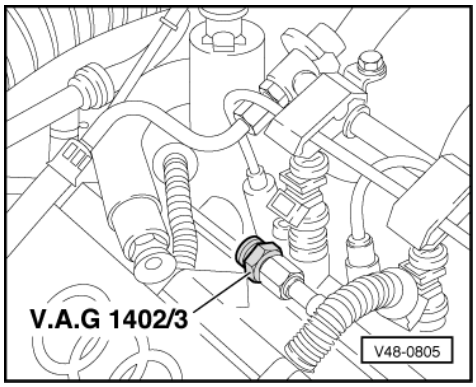

- -> Screw adapter V.A.G 1402/3 into pipe instead of pressure hose.

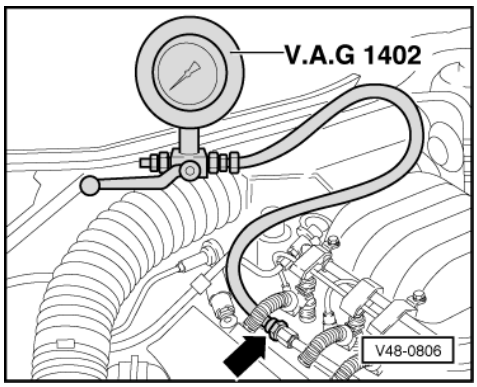

- -> Screw hose for pressure gauge -V.A.G 1402- to adapter -V.A.G 1402/3-.
- Close pressure gauge shutoff valve (lever set to left).
- Attach injector connector onto injector.
- Remove hose clamp from suction hose and top up fluid in reservoir if necessary.

Checking pressure:

To avoid damaging the pump, note the following:

- Do not allow the engine to run for more than 10 seconds when carrying out this test.
- Start the engine without pressing the accelerator and let it run at idling speed.
- Read off the pump pressure at idling speed immediately after starting the engine (if necessary, have a second mechanic read off the pressure).
- The pressure will drop during the test; take the highest pressure reading as the test value
  Specified value: 120 - 130 bar of pressure.

- Switch off engine.

  Replace vane pump if specified value is not attained => Page 327

- Check hydraulic fluid level =>Page 316
- Bleed steering system => Page 317
- Check steering system for leaks =>Page 318

13.3 - Assembly overview of vane pump

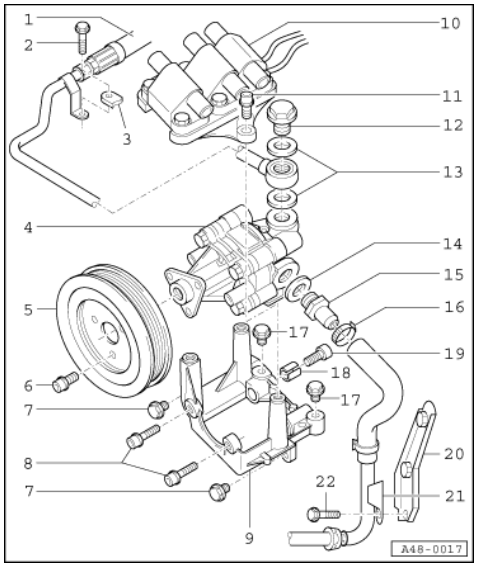

Vehicles with 6-cylinder 2-valve petrol engine

Notes:

- Replace sealing rings.
- Do not re-use hydraulic fluid which has been drained off.
- Hydraulic fluid: Part no. G 002 000

1 Expansion hose
- Section with pipe, runs to steering box

2 Combi bolt, 8 Nm

3 Bore in intake manifold

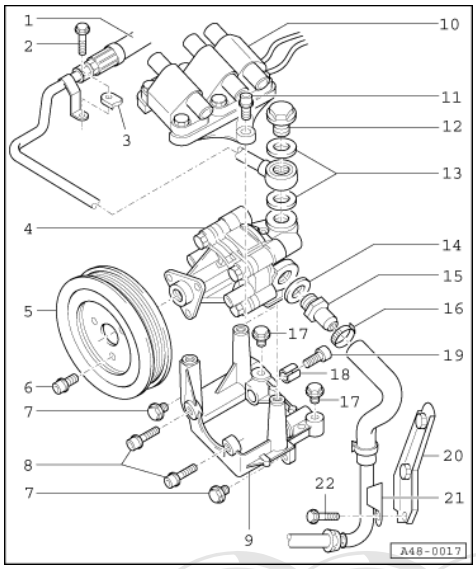

4 Vane pump
- Fill with fluid before installing =>Note on Page 318
- Check delivery pressure => Page 324

5 Belt pulley

6 Hexagon socket head bolt, 25 Nm
- Counterhold with V.A.G 1590 if necessary when releasing and tightening.

7 Hexagon bolt, 25 Nm

8 Hexagon socket head bolt, 25 Nm

9 Bracket

10 Ignition coils with bracket

11 Hexagon socket head bolt, 25 Nm

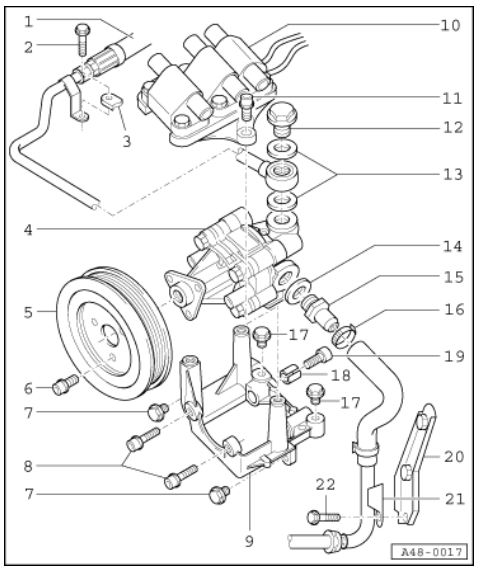

12 Banjo bolt, 50 Nm
13 Sealing ring
- Always replace

14 Sealing ring
- Always replace

15 Screw fitting, 47 Nm
16 Clip
- Tension using V.A.G 1275
- Always replace

17 Hexagon bolt, 25 Nm
18 Slotted bushing
19 Hexagon socket head bolt, 25 Nm
20 Bracket
- Screwed to cylinder head

21 Suction hose
- Section piece with pipe

22 Combi bolt, 8 Nm

13.4 - Removing and installing vane pump

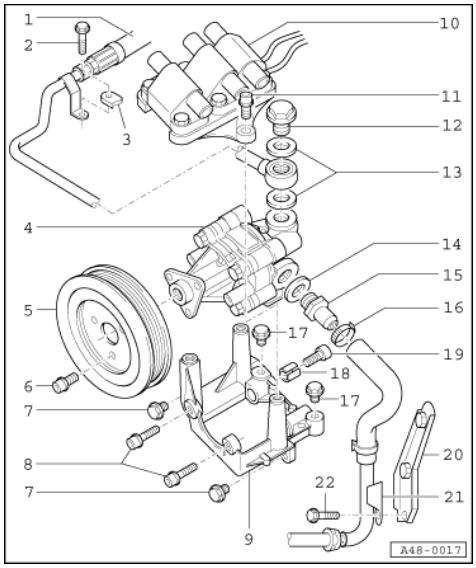

Vehicles with 6-cylinder 2-valve petrol engine

Removing

- Remove upper engine cover
  => Fig. 1.
- Remove ribbed belt cover
  => Fig. 2 .
- Relieve tension on ribbed belt
  =>Fig. 3
- Counterhold belt pulley with V.A.G 1590 if necessary and unscrew.
- Pull ignition cables out of ignition coils - 10 -.

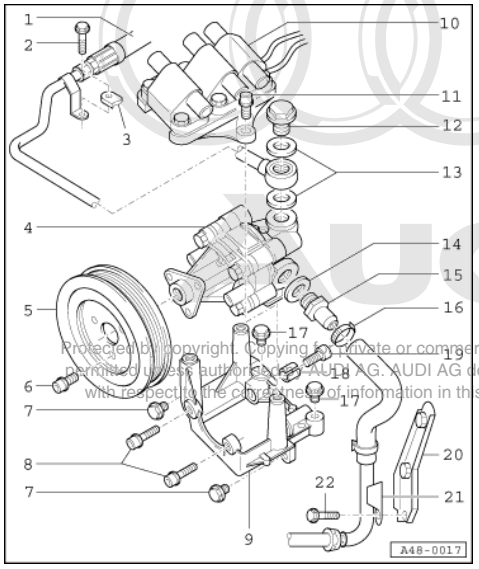

- Detach suction pipe with 3094.
- Detach pressure and suction pipes.
- Unscrew bracket, Item - 9 - and remove complete with vane pump.
- Remove vane pump with bracket.
- Unscrew bolts for vane pump from bracket and remove vane pump.

Installing:

Install in reverse order.

The ignition cables must be allocated according to the numbering => Fig. 4

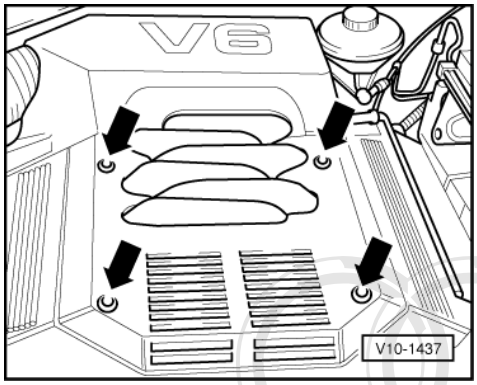

-> Fig.1 Unclipping and attaching engine top cover

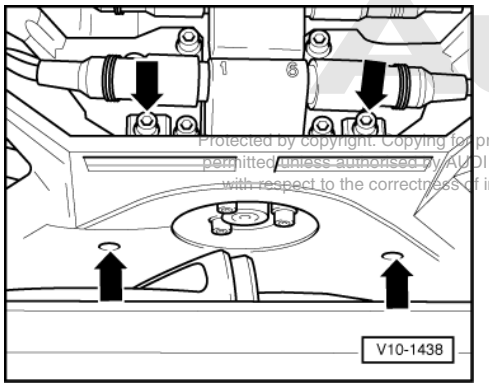

-> Fig.2 Unscrewing ribbed belt cover

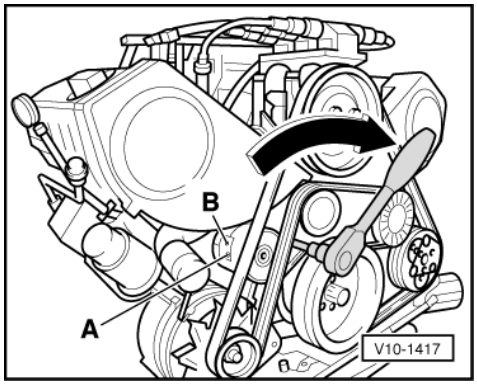

-> Fig.3 Relieving tension on and removing ribbed belt

- Press down Allen key (10 mm AF) to relieve tension on ribbed belt.
- Align bore -A- with bore -B-.
- Insert mandrel -3204- to secure.
- Removing ribbed belt from belt pulley.

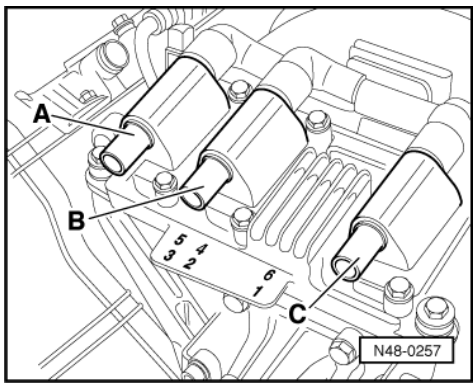

-> Fig.4 Allocating ignition cables to ignition coils

A - Ignition coil for cylinders 5 and 3
B - Ignition coil for cylinders 4 and 2
C - Ignition coil for cylinders 6 and 1

The ignition cables are numbered 1...6

- Allocate cables 6 and 1 to ignition coil -C-.
  - Allocate cables 2, 3, 4 and 5 in the same way.

14 - Assembly overview: Power steering/fluid circuit for 6-cylinder, 5-valve petrol engine

14.1 - Assembly overview: Power steering/fluid circuit for 6-cylinder, 5-valve petrol engine

General information

Servicing of vane pump is not envisaged. In the case of complaints, determine the cause by means of a pressure test and leak test. If a fault is detected, replace the vane pump.

With the exception of the routing of the hydraulic system pipes from left to right on the steering box, the fluid circuit of RHD vehicles corresponds to that of the LHD version.

Notes:

- Check steering system for leaks if there is a lack of fluid in the reservoir.
- If a leak is found in the area of the pipe connections, first check pipes/pipe connections for leaks, re-tighten if necessary and wipe dry.
- Replacement pumps are not filled with fluid. Prior to installation these must always be filled with hydraulic fluid G 002 000 and cranked by hand to avoid possible noise whilst driving or pump damage.
- Type of fluid: Hydraulic fluid G 002 000

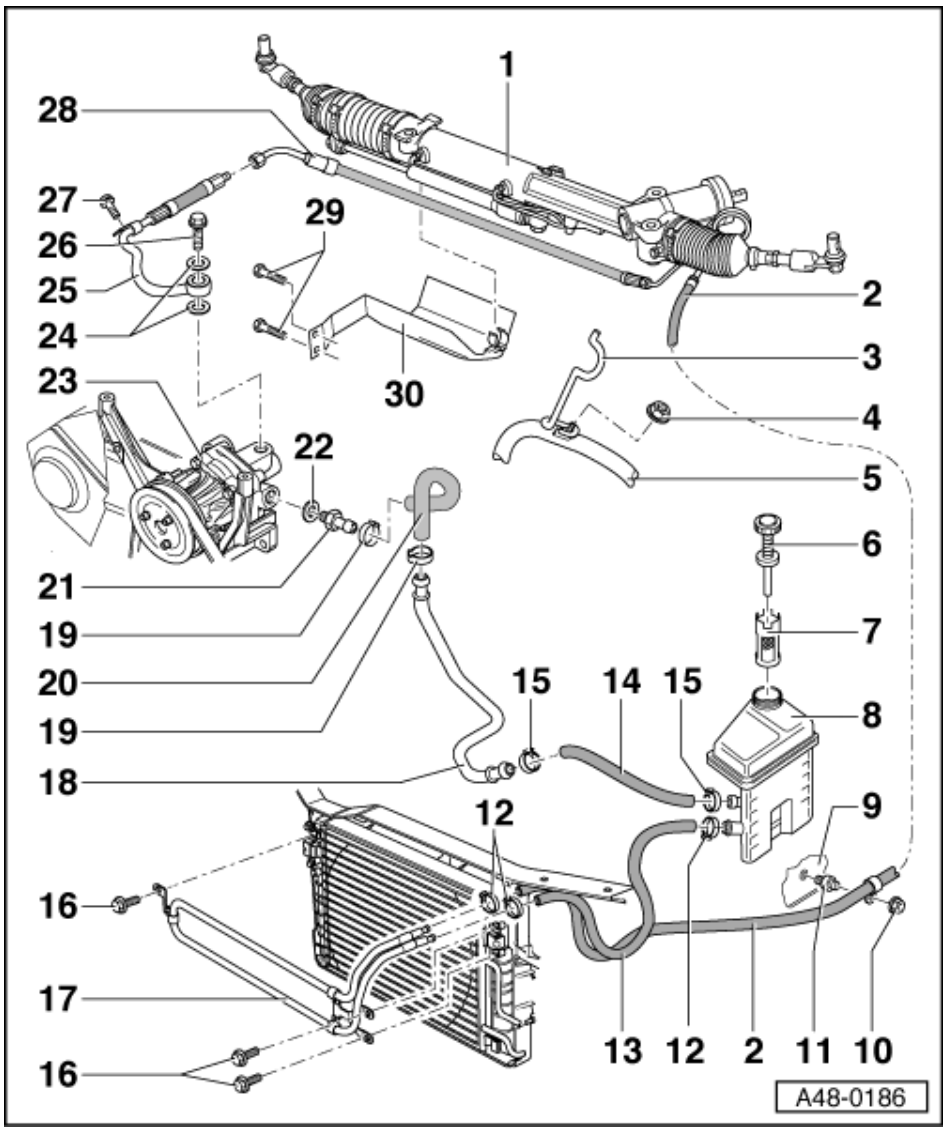

When fluid circuit has been opened always:

- Check all unions for leaks, start engine and perform visual inspections.
- Check fluid level =>Page 316

1 Power-assisted steering box
  - Assembly overview:
  - Left-hand drive => Page 249
  - Right-hand drive => Page 298
  - Servicing => Page 293

2 Return hose
  - Steering box - hydraulic fluid cooler

3 Retaining clip
  - Attach expansion hose (=> Item 28)

4 Hexagon nut, 20 Nm

5 Water pipe

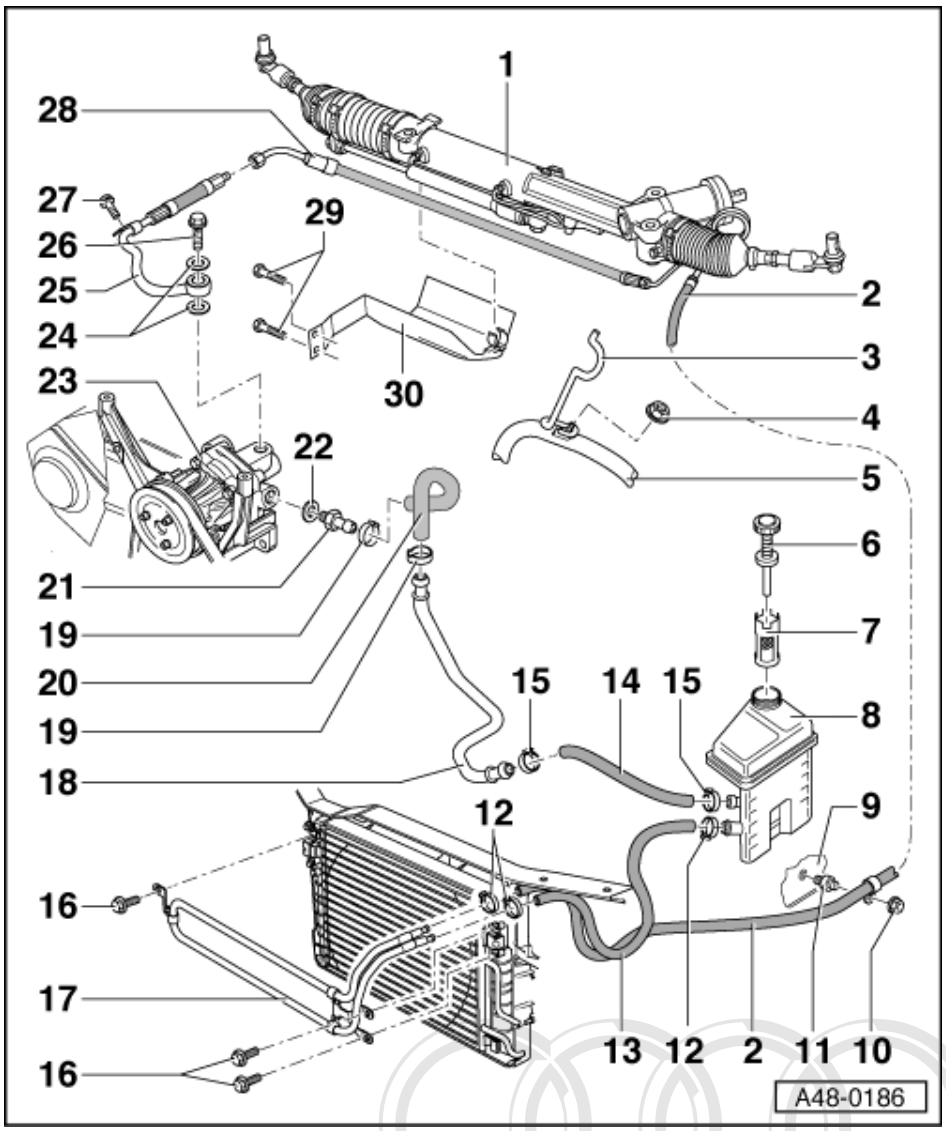

6 Cap with dipstick

7 Strainer for expansion tank
- Clean using solvent

8 Expansion tank
- Refilling with hydraulic fluid, Part No. G 002 000, filling quantity 1.2 litres
- Plugged into hydraulic unit bracket
- Check fluid level =>Page 316

9 Support panel for suspension strut holder

Note:

Items 10 and 11 are located in the left wheel housing and accessible from outside with vehicle raised.

10 Hexagon nut 5.6 Nm

11 Bonded rubber bush

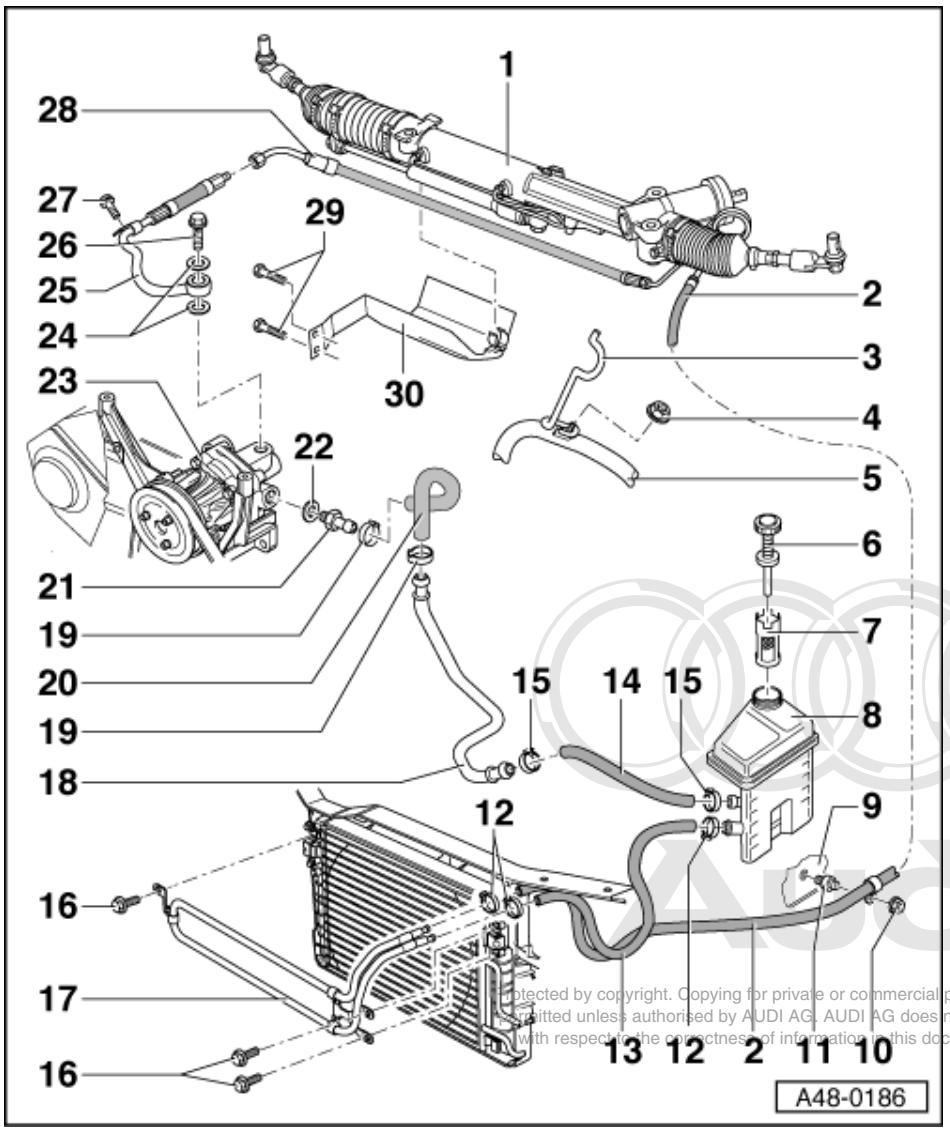

12 Clip

- Always replace
- Tensioning => Page 48-113
- Can also be replaced by screw-type hose clamp

13 Return hose

- Fluid cooler - expansion tank

14 Suction hose

- Pipes - expansion tank

15 Clip

- Always replace
- Tensioning => Page 48-113
- Can also be replaced by screw-type hose clamp

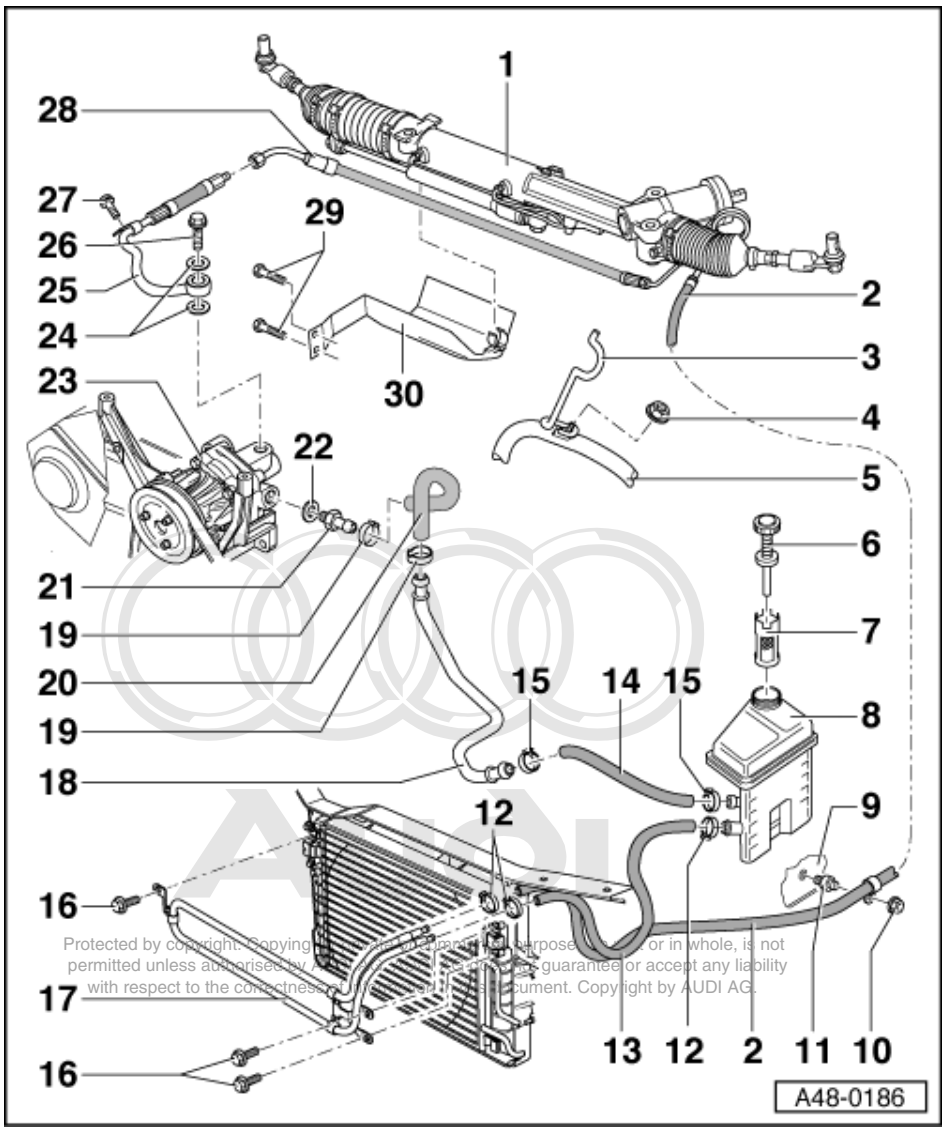

16 Combi bolt, 10 Nm

17 Hydraulic fluid cooler

18 Pipe for suction hose

19 Clip

- Always replace
- Tensioning => Page 48-113
- Can also be replaced by screw-type hose clamp

20 Suction hose

- Note marking -P- for hose connection at pump end.

21 Screw fitting, 50 Nm

22 Sealing ring

- Always replace

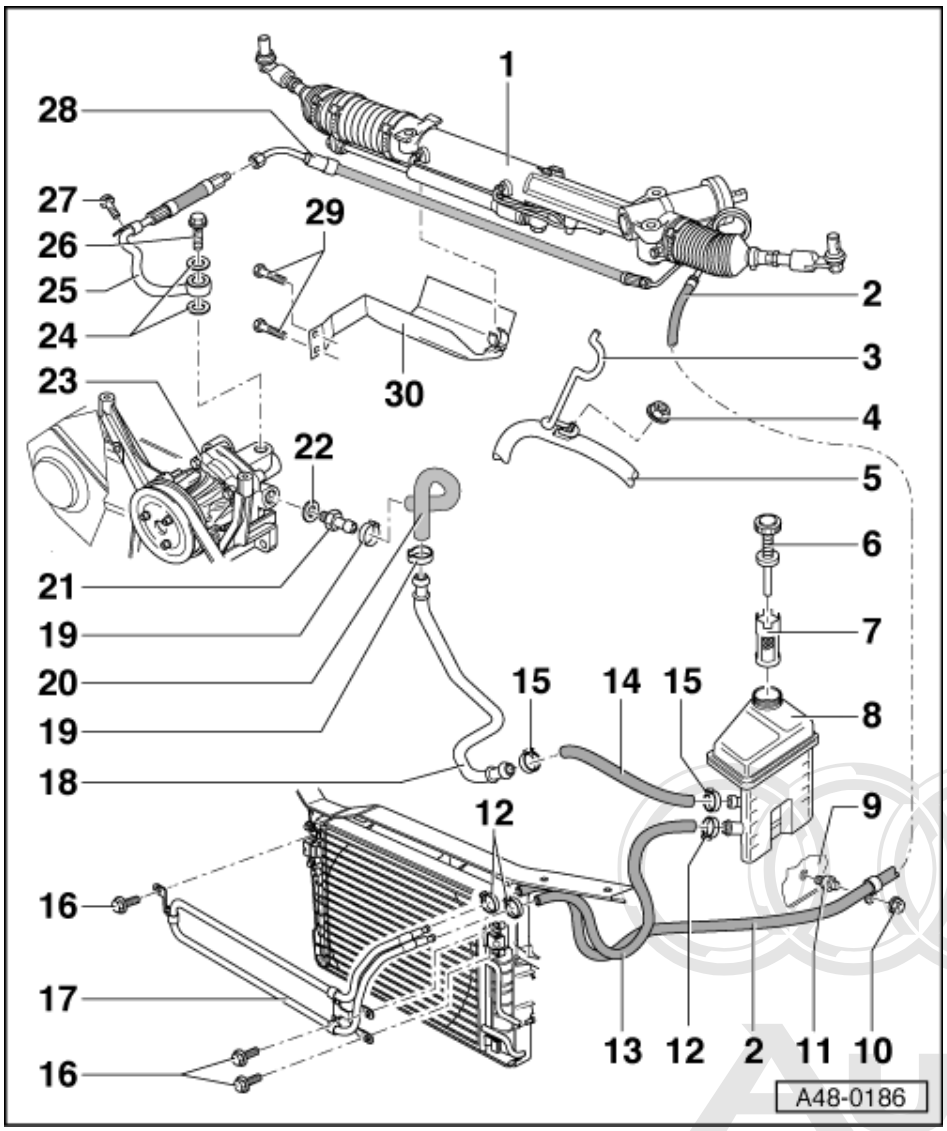

23 Vane pump

- Check delivery pressure => Page 338
- Removing and installing=>Page 344
- Before installing, fill with hydraulic fluid at suction end and crank by hand until fluid emerges at pump outlet.

24 Sealing ring

- Always replace

25 Expansion hose

- Section with pipe, runs to steering box

26 Banjo bolt, 47 Nm

27 Hexagon bolt, 6 Nm

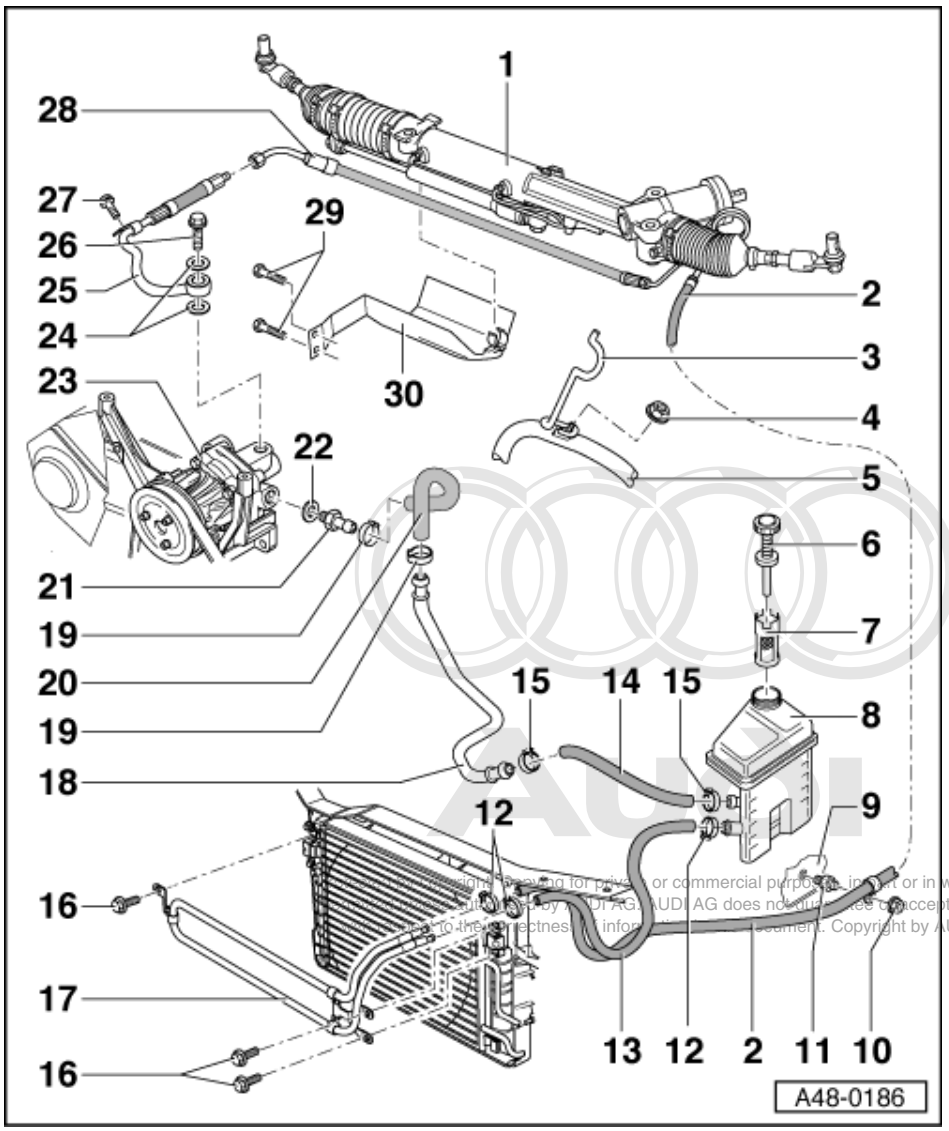

28 Expansion hose

- Tighten union nut to 40 Nm at Item 25 ; counterhold at hexagon for this purpose.
- Attach to fastening bracket (=>Item 3)

29 Hexagon bolt, 10 Nm

30 Guard plate

- Only for LHD
- Clip into steering damper using spring clamp.

Note:

This guard plate is also installed on the V8 engine.

14.2 - Checking vane pump supply pressure

Vehicles with 6-cylinder 5-valve petrol engine

Special tools and workshop equipment required

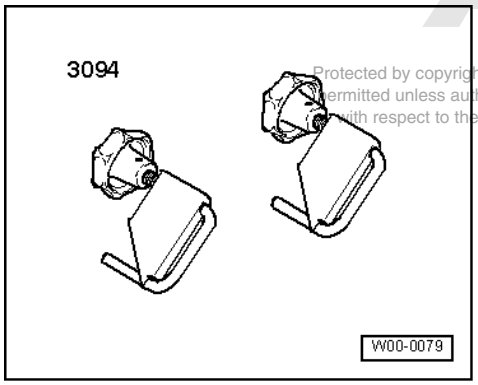

- 3094 Hose clamps

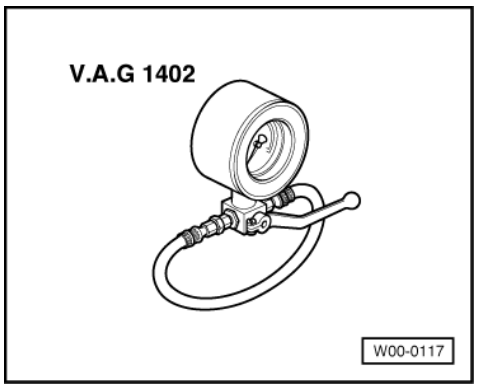

- V.A.G 1402 Tester for power-assisted steering

- Unclip engine cover at top and remove.

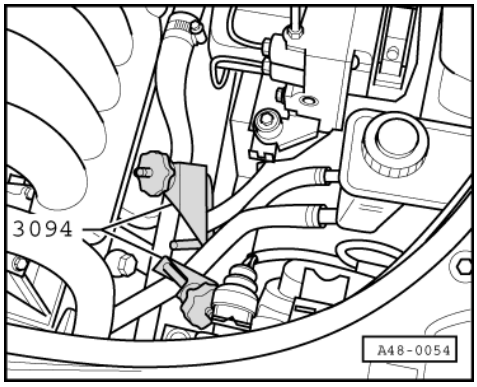

- -> Pinch off suction and return pipes with hose clamps -3094-.

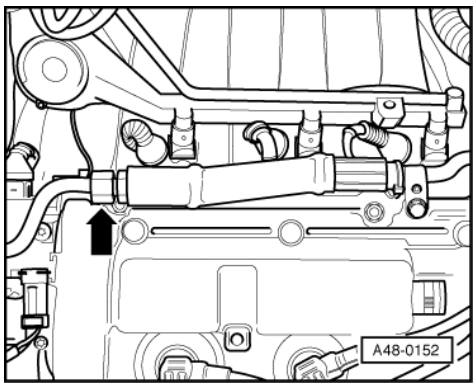

- -> Unscrew pipe from expansion hose (arrow); counterhold on hexagon of expansion hose.
- Screw hose of pressure gauge -V.A.G 1402- to section of expansion hose leading to pump.

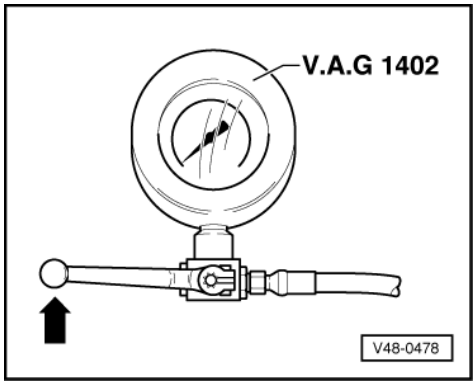

- -> Close pressure gauge shut-off valve (lever set to left).
- Remove hose clamps -3094-.
- If necessary top up fluid level in expansion tank.

Checking pressure:

To avoid damaging the pump, note the following:

- Do not allow the engine to run for more than 10 seconds when carrying out this test.
- Start the engine without pressing the accelerator and let it run at idling speed.
- Read off the pump pressure at idling speed immediately after starting the engine (if necessary, have a second mechanic read off the pressure).
- The pressure will drop during the test; take the highest pressure reading as the test value
  Specified value: 120 - 130 bar of pressure.

- Switch off engine.

  Replace vane pump if specified value is not attained => Page 344

- Check hydraulic fluid level =>Page 316
- Bleed steering system => Page 317
- Check steering system for leaks =>Page 318

14.3 - Assembly overview of vane pump

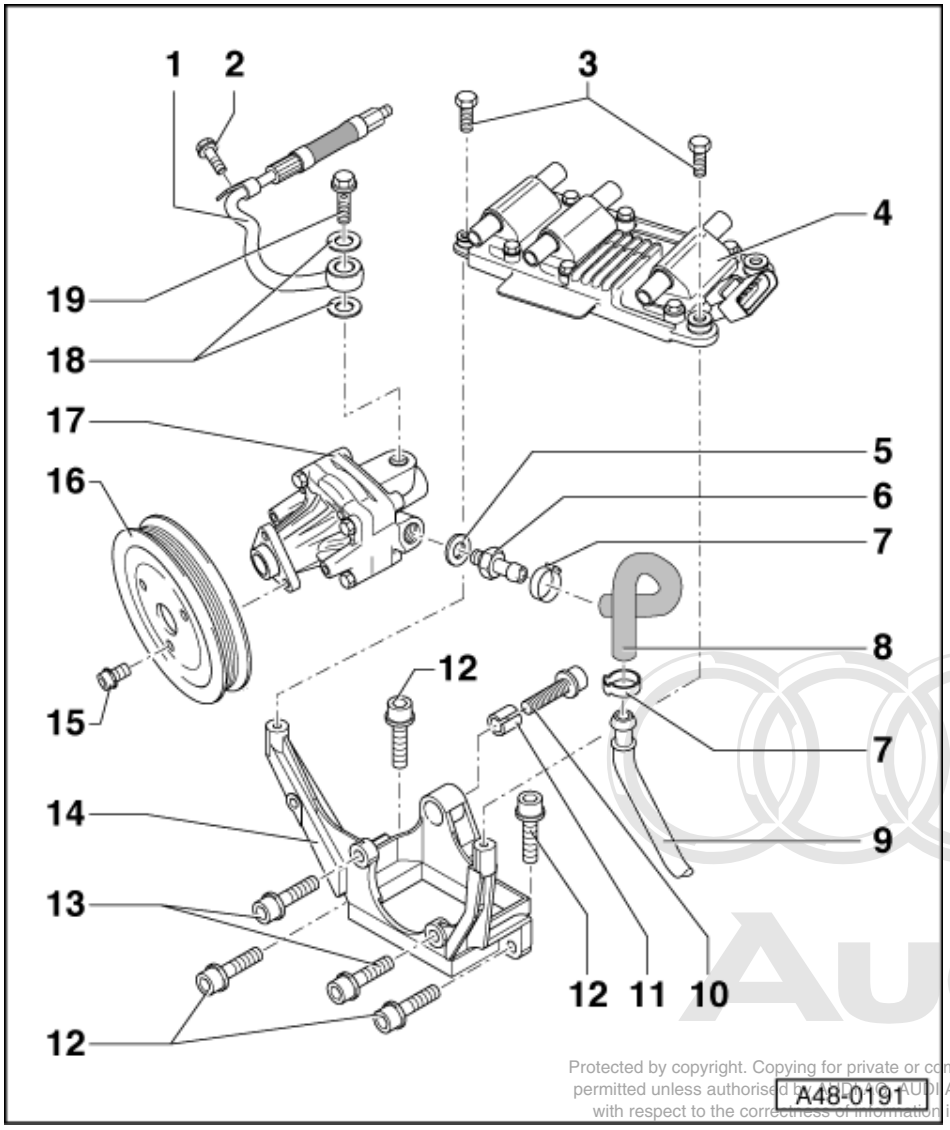

Vehicles with 6-cylinder 5-valve petrol engine

Notes:

- Replace sealing rings.
- Do not re-use hydraulic fluid which has been drained off.
- Hydraulic fluid: Part no. G 002 000

1 Expansion hose
  - Section with pipe, runs to steering box
2 Hexagon bolt, 6 Nm
3 Hexagon bolt, 9 Nm
4 Ignition coils with bracket

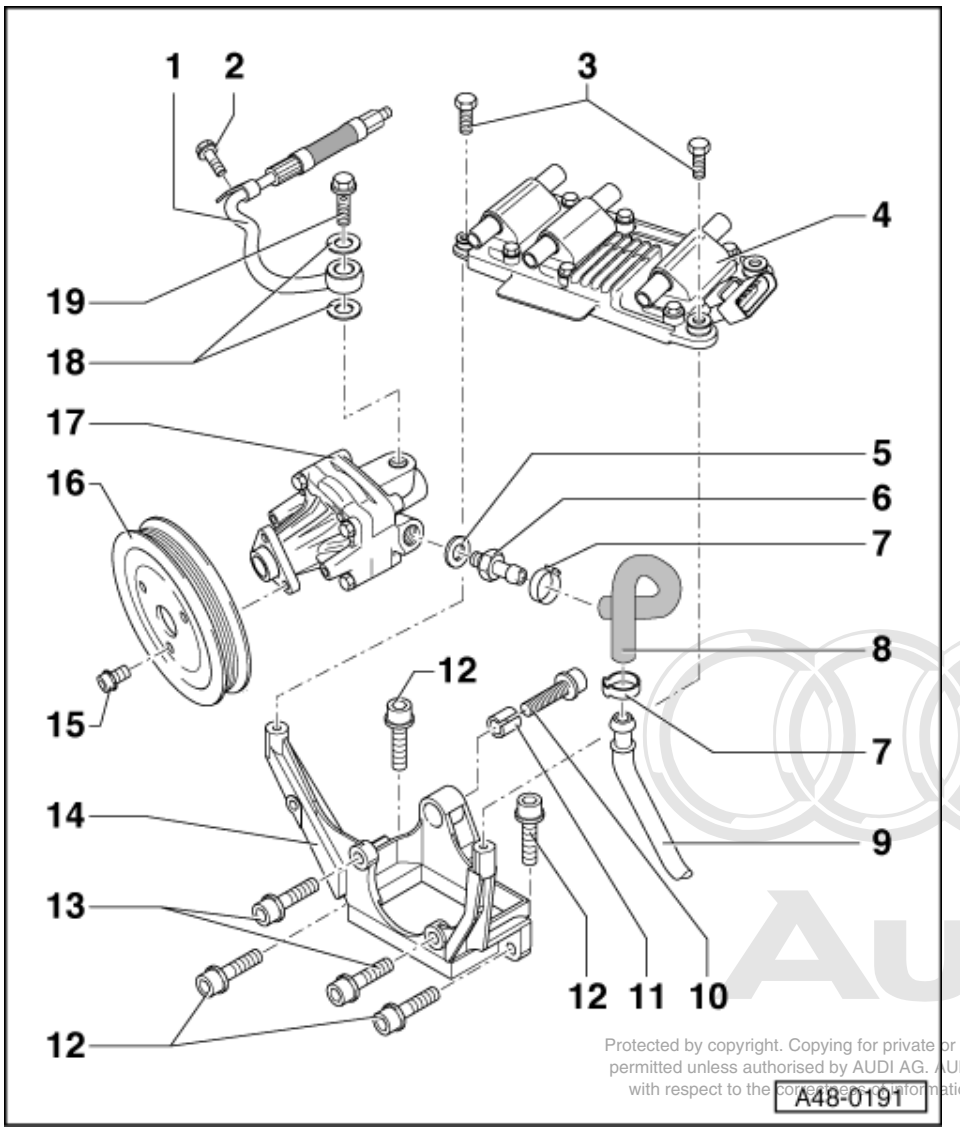

5 Sealing ring
- Always replace

6 Screw fitting, 50 Nm

7 Clip
- Always replace
- Tensioning => Page 48-113
- Can also be replaced by screw-type hose clamp

8 Suction hose
- Note marking -P- for hose connection at pump end.

9 Pipe for suction hose

10 Hexagon socket head bolt, 25 Nm
- Rear fastening of vane pump to mounting bracket

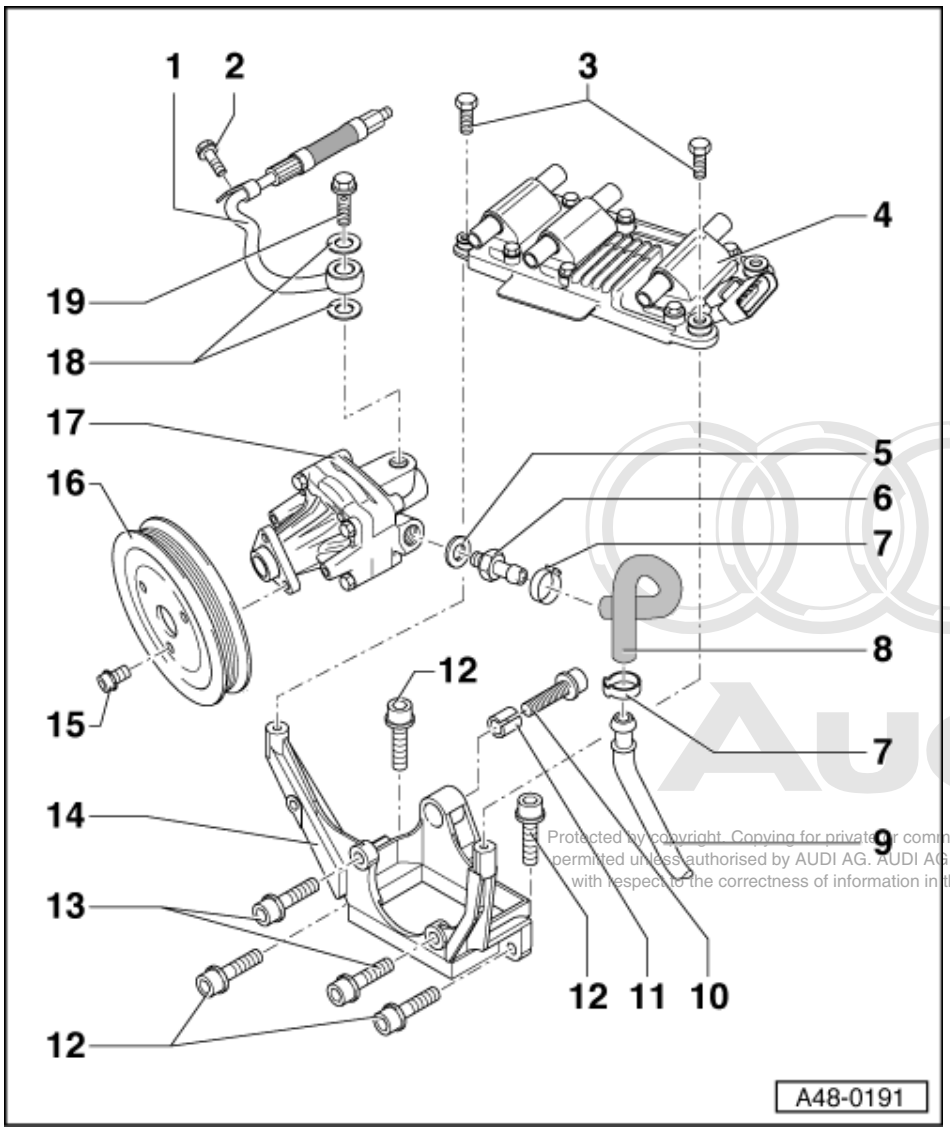

11 Slotted bushing
- Used to offset tolerances

12 Hexagon socket head bolt, 25 Nm
- Fastening of mounting bracket for vane pump to crankcase

13 Hexagon socket head bolt, 25 Nm
- Front fastening of vane pump to mounting bracket

14 Mounting bracket for vane pump

15 Hexagon socket head bolt, 25 Nm
- When loosening and tightening counterhold with special tool -3212-

16 Belt pulley

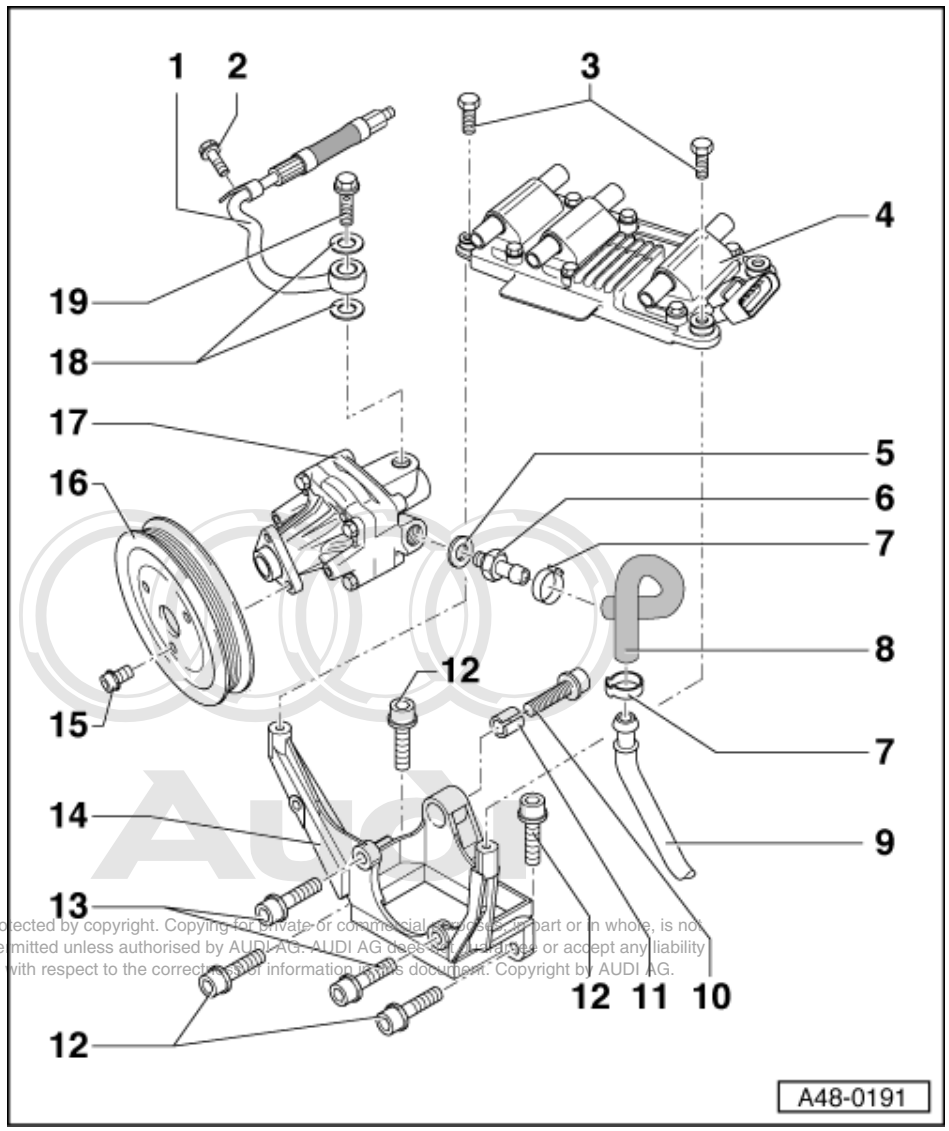

17 Vane pump

- Check delivery pressure
  => Page 338
- Removing and installing
  =>Page 344 .
- Before installing, fill with hydraulic fluid at suction end and crank by hand until fluid emerges at pump outlet.

18 Sealing ring

- Always replace

19 Banjo bolt, 47 Nm

14.4 - Removing and installing vane pump

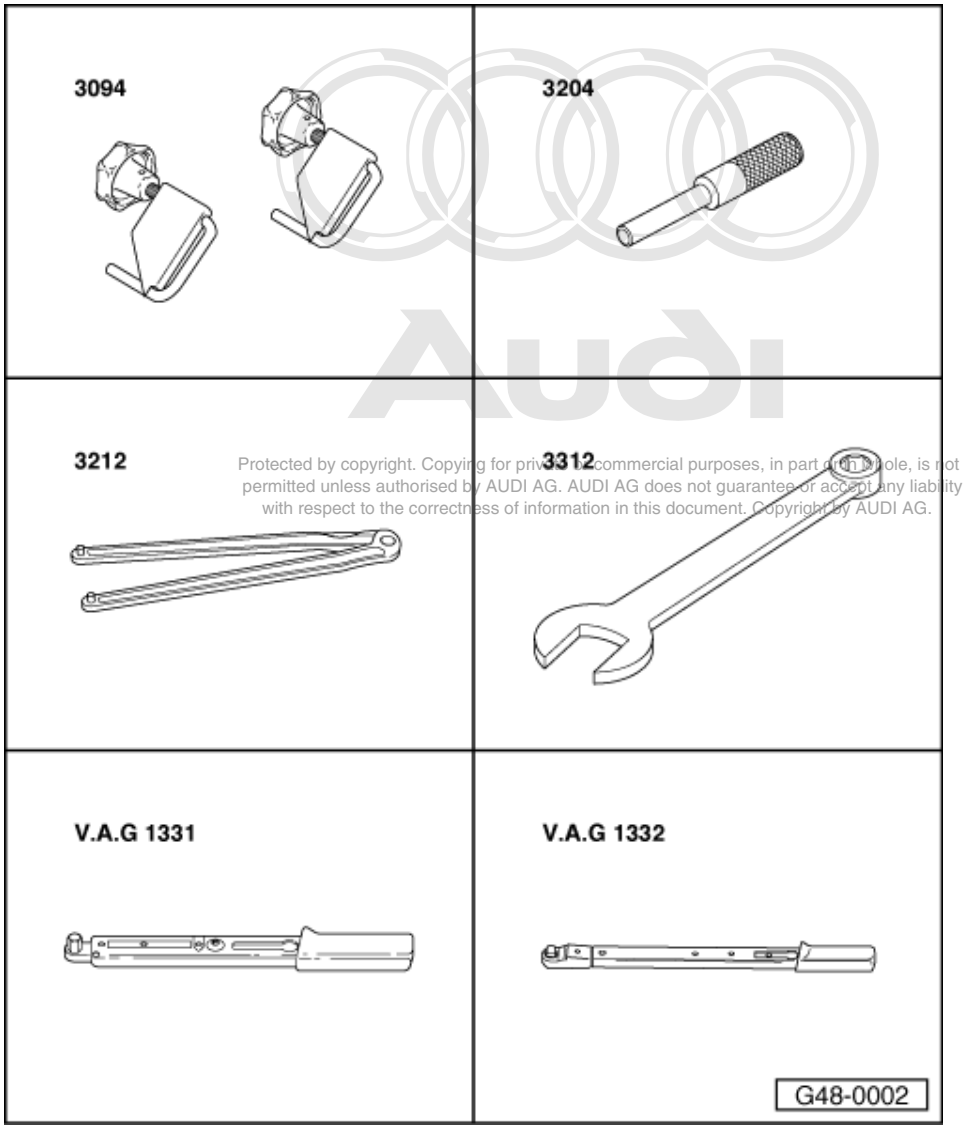

Vehicles with 6-cylinder 5-valve petrol engine

Special tools and workshop equipment required

- 3094 Hose clamp
- 3204 Mandrel
- 3212 Pin-type face wrench
- 3312 Open-end wrench
- V.A.G 1331 Torque wrench
  Measuring range: 5...50 Nm
- V.A.G 1332 Torque wrench
  Measuring range: 40...200 Nm

Additionally required information

Workshop Manual; Engine; Mechanical Components

Removing

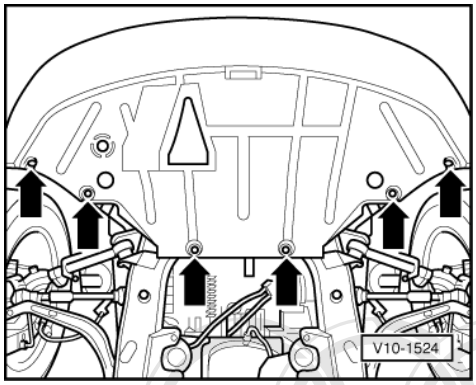

- -> Remove noise insulation.
- Unclip engine cover at top and remove.

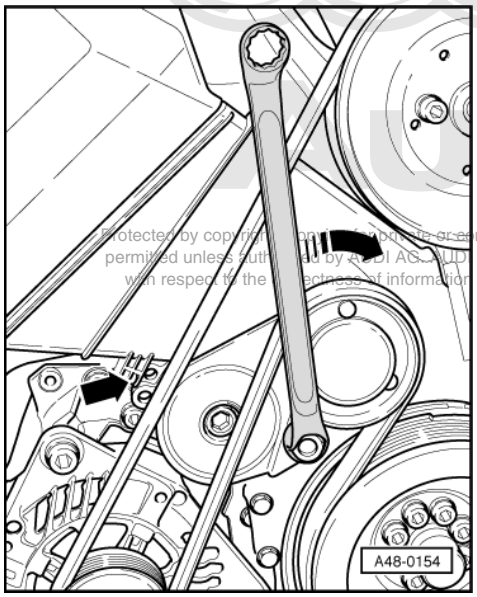

- -> Slacken off ribbed belts for vane pump, viscous fan and alternator.
- Use special tool -3204- to secure.

Note:

Mark the direction of rotation before removing the ribbed belt. If the belt runs in the opposite direction when it is refitted, this can cause breakage. Ensure that the belt is correctly seated in the pulleys when installing.

- Removing ribbed belt from belt pulley.

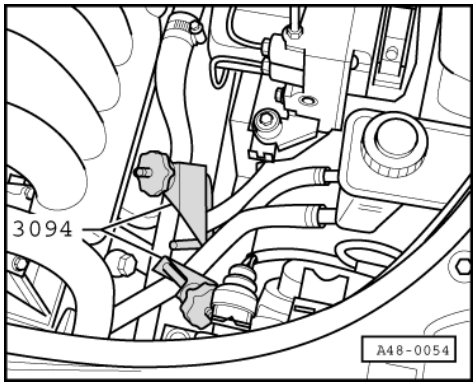

- -> Pinch off suction and return pipes with hose clamps -3094-.

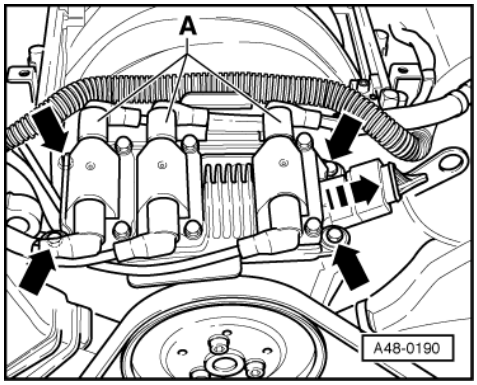

- -> Unplug 5-pin connector from ignition coils.
- Unplug three rear connectors -A- from ignition coils.
- Unscrew the four retaining bolts.
- Swivel ignition coil holder to the rear.

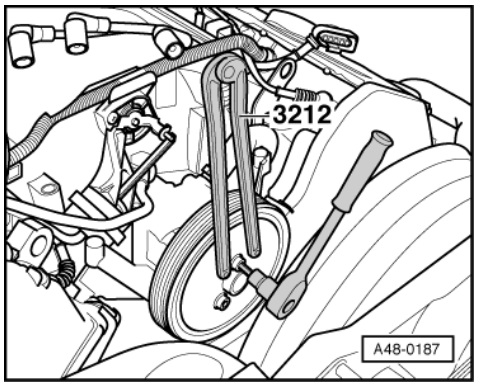

- -> Unscrew pulley of vane pump whilst counterholding with 2-hole pin wrench -3212-.

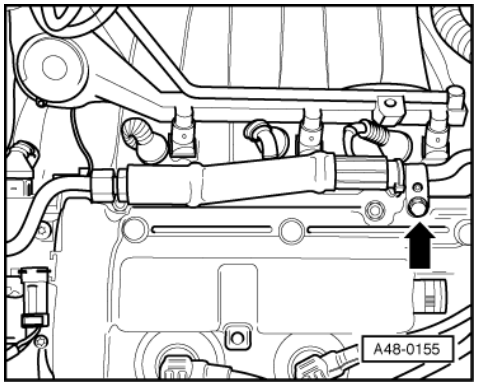

- -> Pipe of expansion hose is bolted onto cylinder head.
  => Page 336 , Item 27
- Remove this bolt.

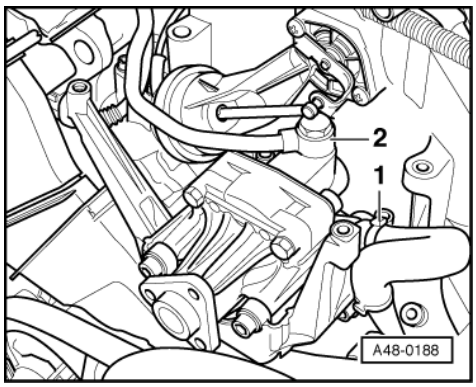

- -> Open clip -1- and detach suction hose.
- Detach expansion hose -2-.

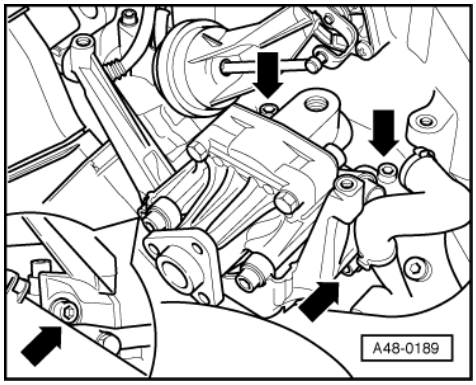

- -> Unscrew vane pump bracket.
- Remove bracket with pump.
- Then screw vane pump off bracket.

Upon installation, pay special attention to the following:

- Before installing a new pump, pour in hydraulic fluid at intake end and crank by hand until fluid emerges from the delivery end.

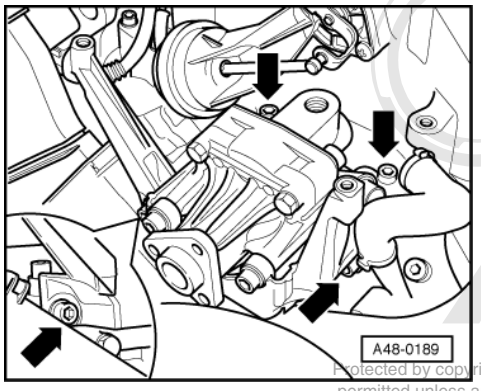

- Clean any areas in engine compartment which become fouled with fluid.

- Bolt pump to bracket.
- -> Insert pump with bracket.
- Fit all bolts; tighten the two front bolts first, then the rear bolts.

- Attach new sealing rings to banjo bolt.

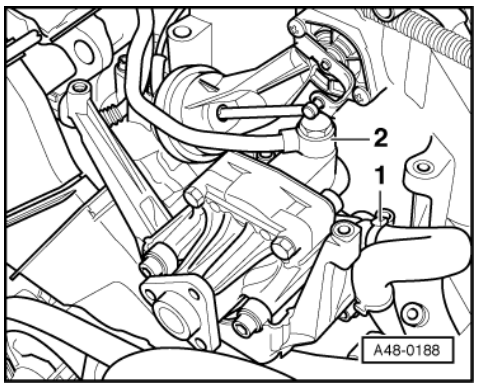

- -> Tighten banjo bolt for pressure hose -2-.
- Screw pipe for the expansion hose to the cylinder head.
  => Page 336 , Item 27 .
- Install suction hose -1-.

Note marking -P- for hose connection at pump end.

- Remove hose clamps -3094-.

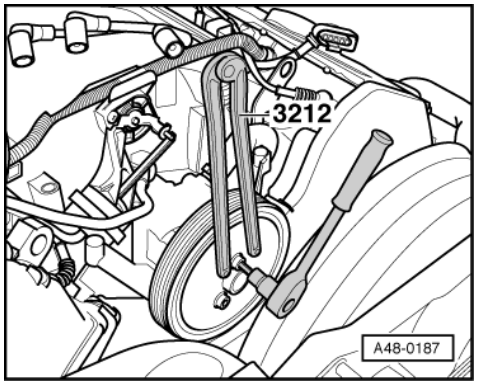

- -> Tighten hexagon socket-head bolts for vane pump belt pulleys.
- Installing ribbed belt

=> Engine, Mechanical Components; Repair group 13

- Fit ignition coil holder.
- Connect ignition cables to ignition coils.
- Check hydraulic fluid level =>Page 316
- Bleed steering system => Page 317
- Check steering system for leaks =>Page 318

15 - Assembly overview: Power steering/oil circuit for 6-cylinder TDI engine

15.1 - Assembly overview: Power steering/oil circuit for 6-cylinder TDI engine

General information

Servicing of vane pump is not envisaged. In the case of complaints, determine the cause by means of a pressure test and leak test. If a fault is detected, replace the vane pump.

Notes:

- Check steering system for leaks if there is a lack of fluid in the reservoir.
- If a leak is found in the area of the pipe connections, first check pipes/pipe connections for leaks, re-tighten if necessary and wipe dry.

- Replacement pumps are not filled with fluid. Prior to installation these must always be filled with hydraulic fluid G 002 000 and cranked by hand to avoid possible noise whilst driving or pump damage.
- Type of fluid: Hydraulic fluid G 002 000

- In vehicles with V6 TDI engines, additional heat shields are fitted on the left side, and an engine cover on the left and right respectively at the track rods.
- The left engine compartment cover covers the securing bolts of the steering box. It can, however, only be removed once the heat shields have been detached.

Overview of heat shields => Page 261

Repair solution for the right engine compartment cover => Page 354

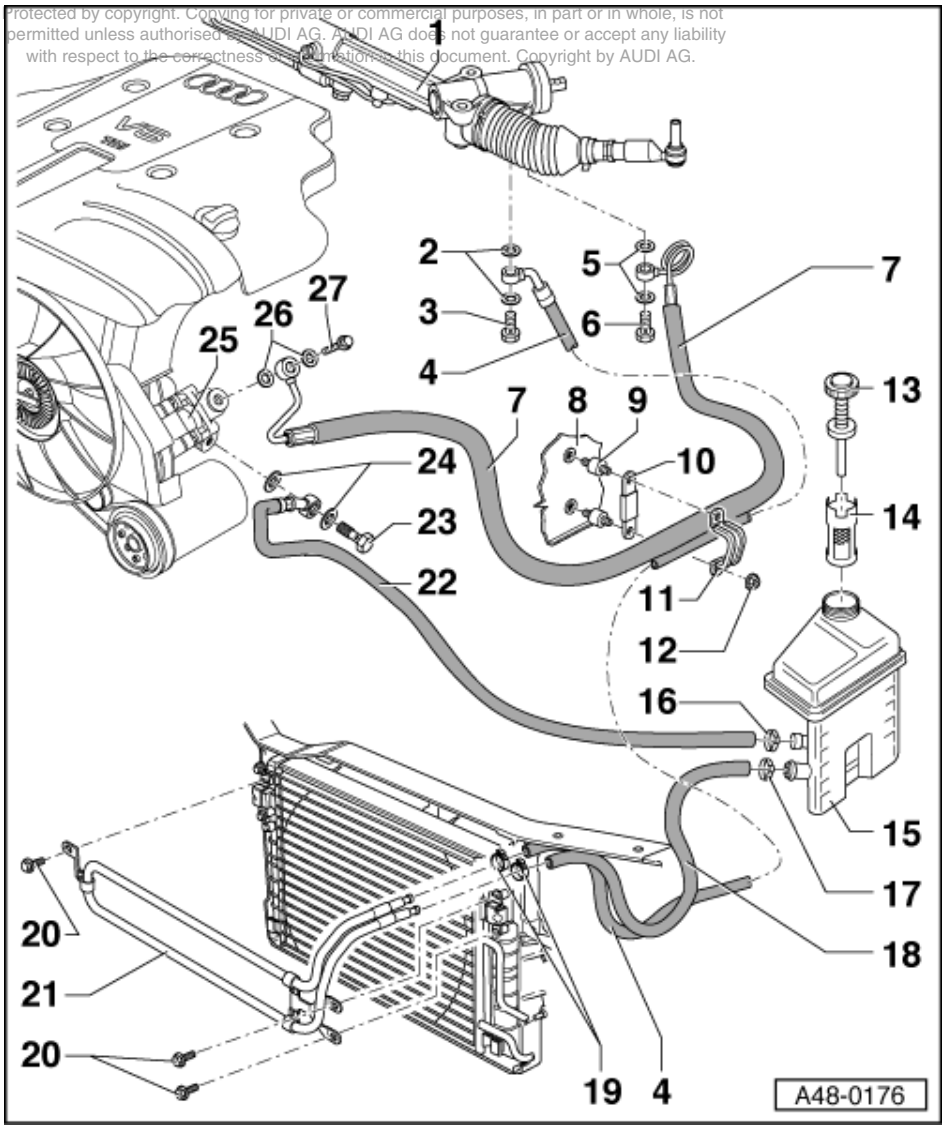

When fluid circuit has been opened always:

- Check all unions for leaks, start engine and perform visual inspections.
- Check fluid level =>Page 316

1 Power-assisted steering box

- Assembly overview:
  - Left-hand drive => Page 249
  - Right-hand drive => Page 298
- Servicing => Page 293
- In vehicles with V6 TDI- engines, removal is only possible to unscrew the bolt following removal of the heat shields => Page 261 and the engine compartments.

- Repair solution for the right engine compartment cover => Page 354

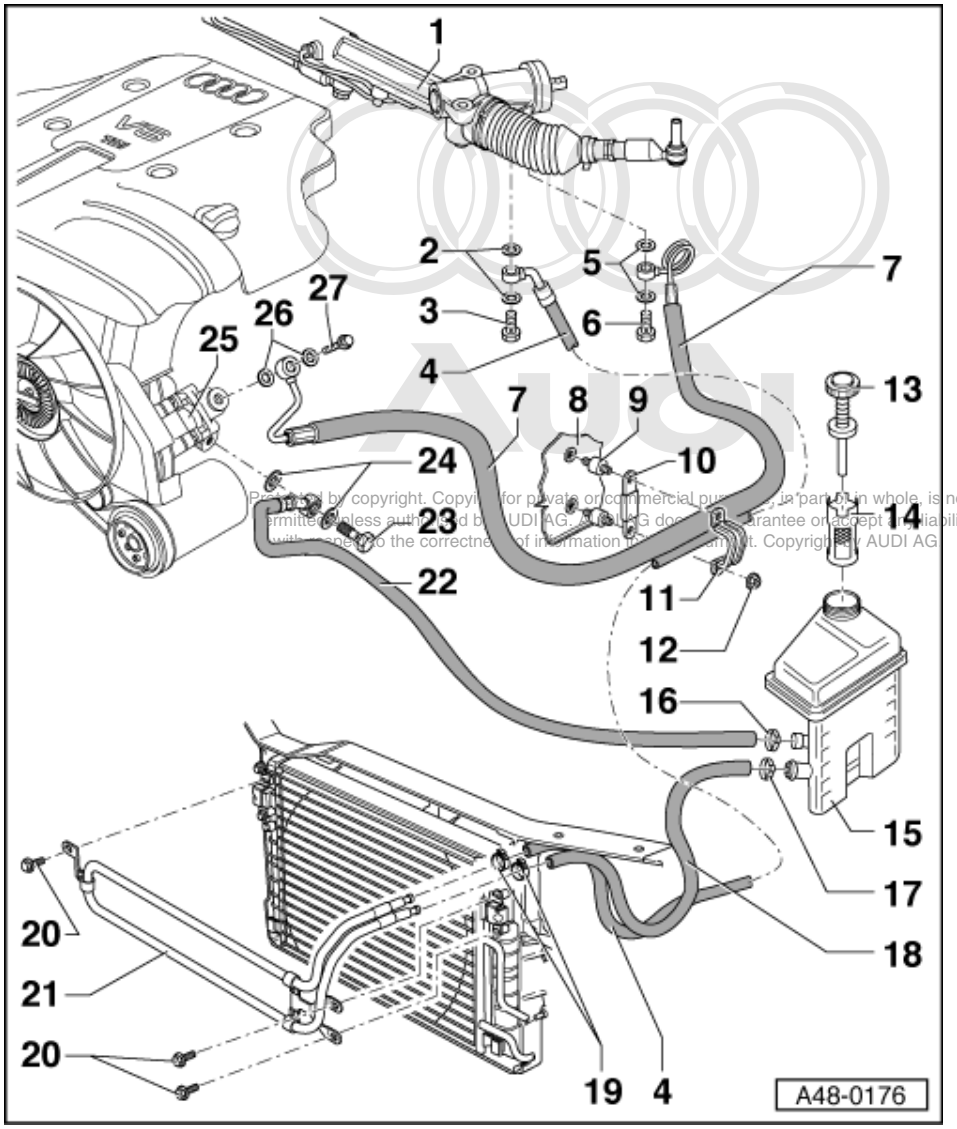

2 Sealing ring
- Always replace

3 Banjo bolt, 47 Nm

4 Return hose
- Steering box - hydraulic fluid cooler

5 Sealing ring
- Always replace

6 Banjo bolt, 40 Nm
- With integrated non-return valve

7 Expansion hose
- Vane pump - steering box

8 Support panel for suspension strut holder

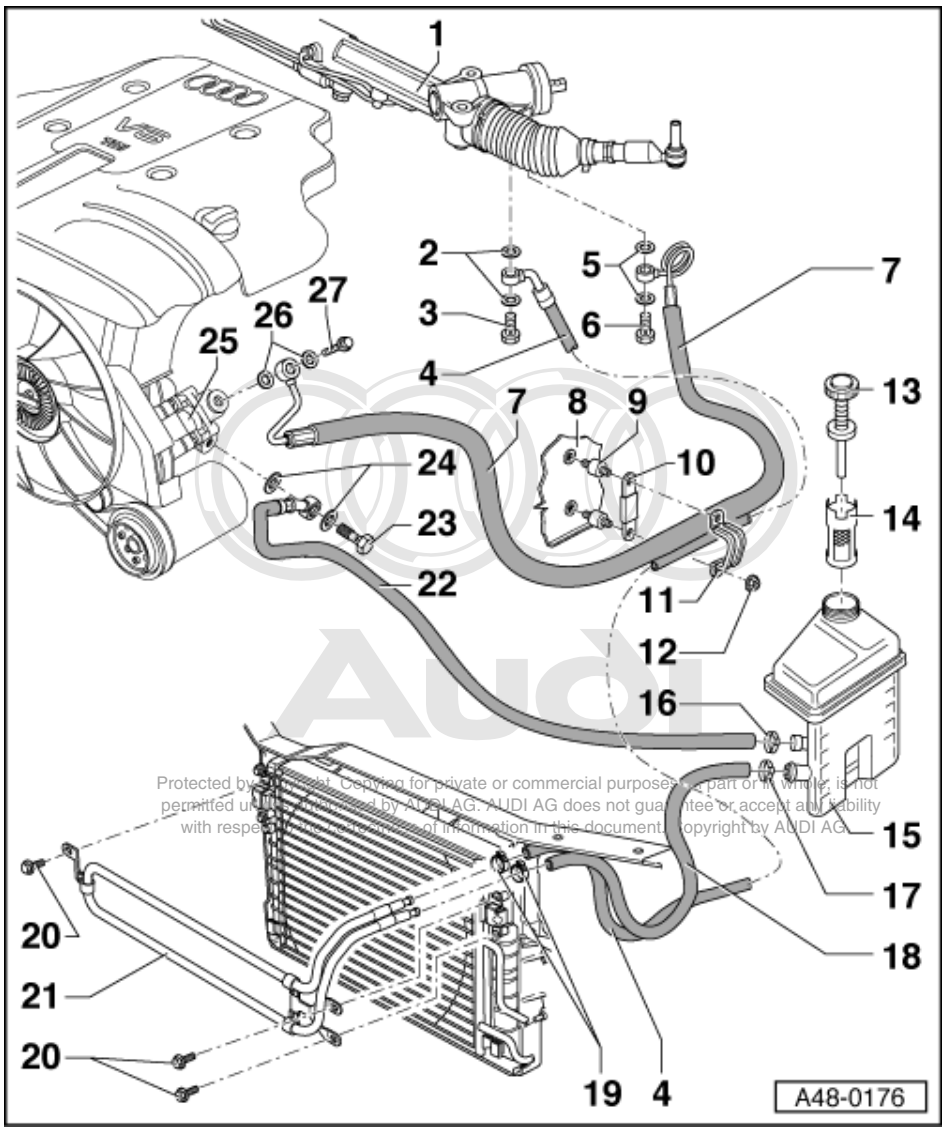

Note:

Items 9, 10, 11 and 12 are located in the left wheel housing and accessible from outside with vehicle raised.

9 Bonded rubber bush

10 Retaining plate

- Note correct installation position:
- Solid rubber faces towards hose

11 Retaining clip

12 Hexagon nut 5.6 Nm

13 Cap with dipstick

- Check fluid level =>Page 316

14 Strainer for expansion tank

- Clean using solvent

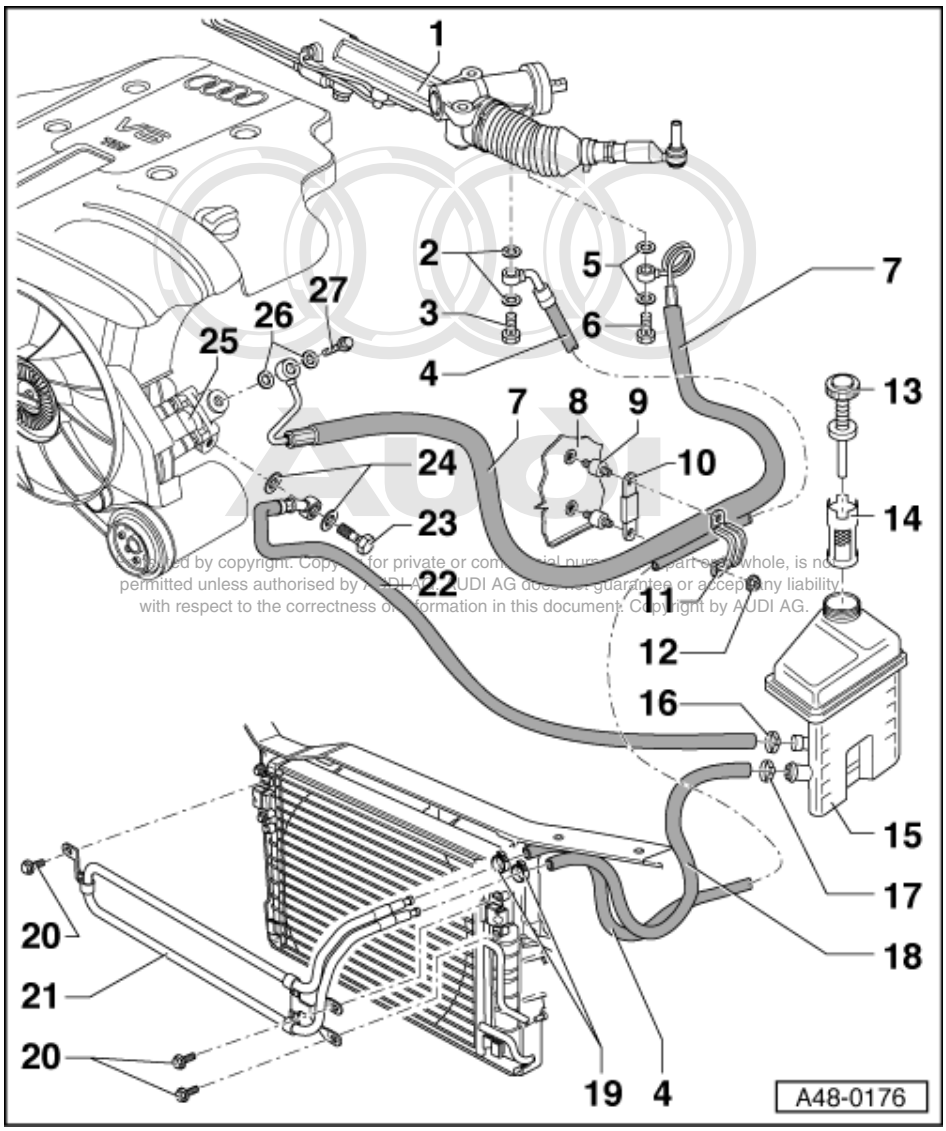

15 Expansion tank

- Refilling with hydraulic fluid, Part No. G 002 000, filling quantity 1.2 litres
- Plugged into hydraulic unit bracket
- Check fluid level =>Page 316

16 Clip

- Always replace
- Tensioning => Page 48-113
- Can also be replaced by screw-type hose clamp

17 Clip

- Always replace
- Tensioning => Page 48-113
- Can also be replaced by screw-type hose clamp

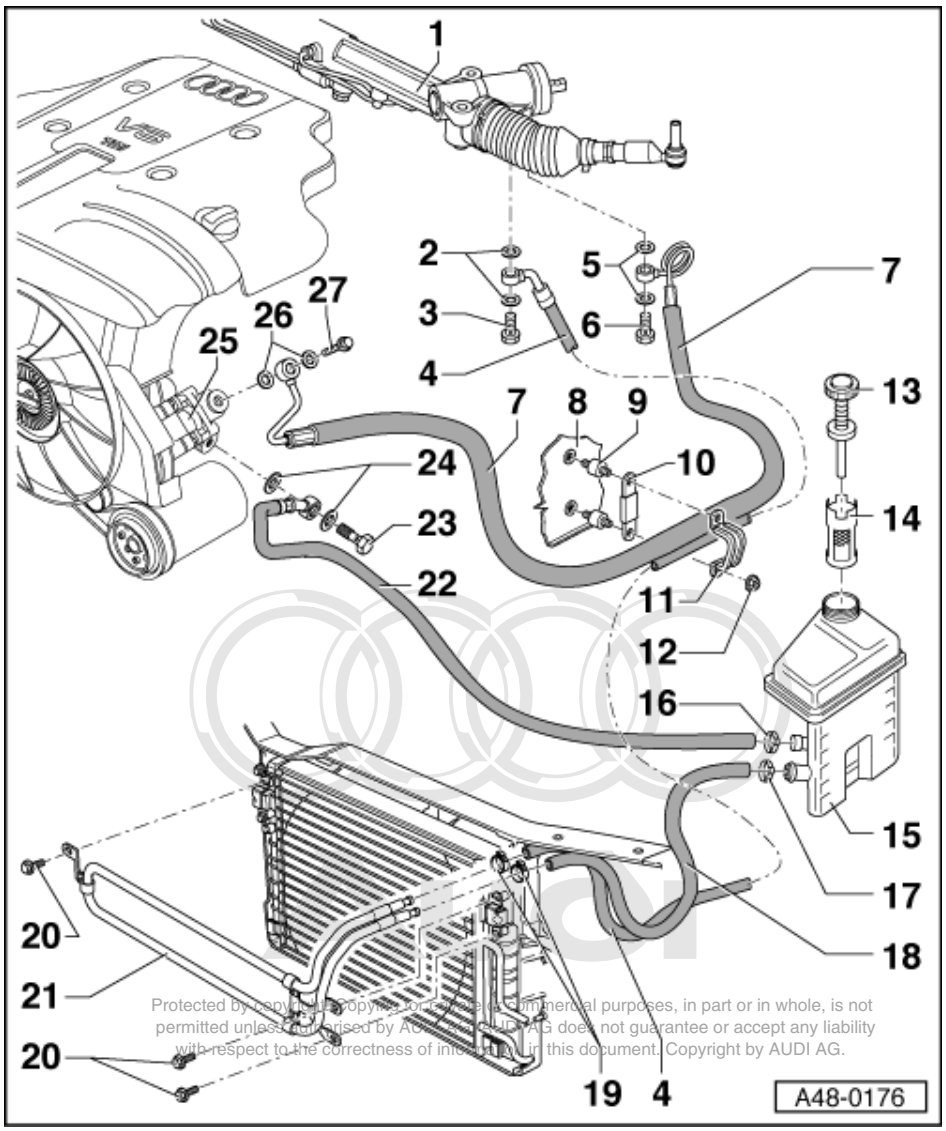

18 Return hose
- Fluid cooler - expansion tank

19 Clip
- Always replace
- Tensioning => Page 48-113
- Can also be replaced by screw-type hose clamp

20 Combi bolt, 10 Nm

21 Hydraulic fluid cooler

22 Suction hose
- Vane pump - expansion tank

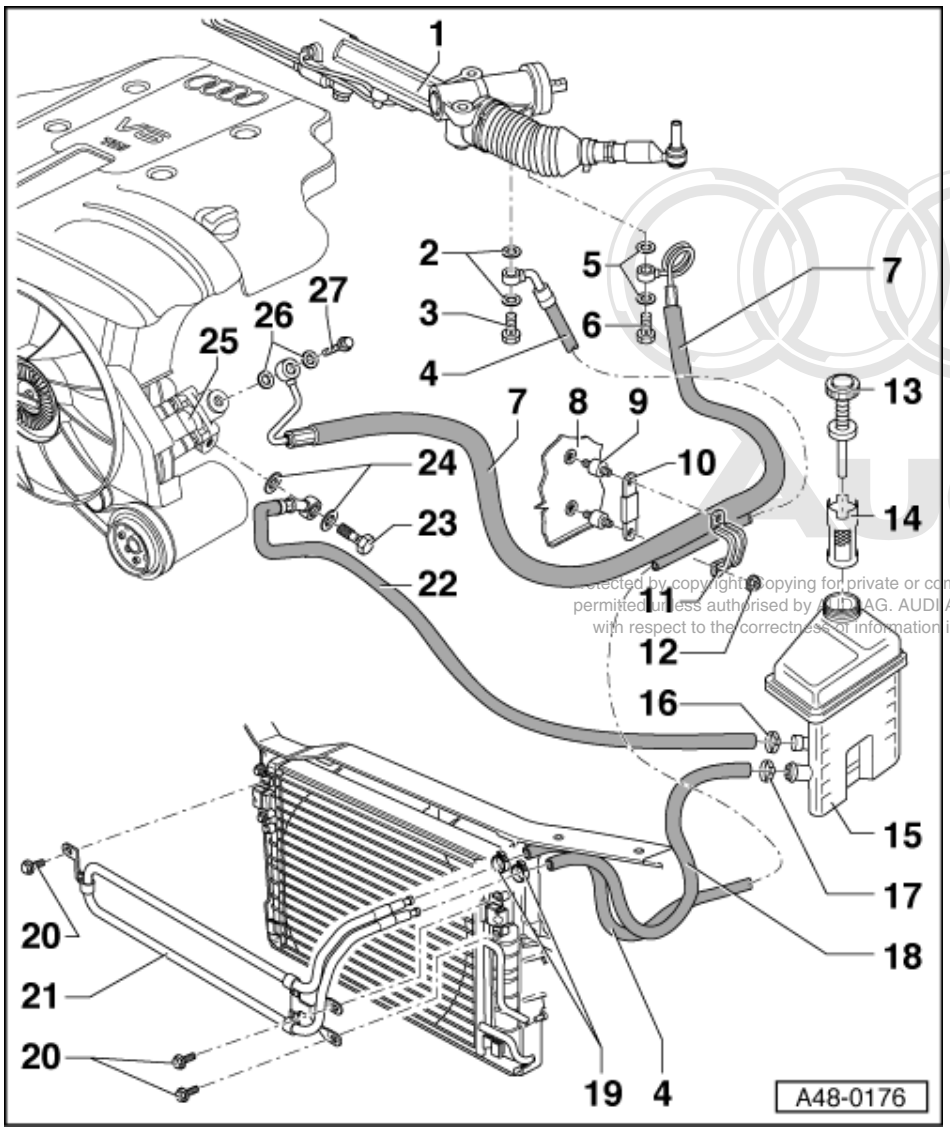

23 Banjo bolt, 50 Nm

24 Sealing ring

- Always replace

25 Vane pump

- Check delivery pressure
  => Page 356
- Assembly overview =>Page 358
- Removing and installing
  =>Page 361

26 Sealing ring

- Always replace

27 Banjo bolt, 47 Nm

Repair solution, right engine cover:

In order to avoid detaching the track rod from the wheel bearing housing and the consequent wheel alignment, please proceed as follows in the case of a damaged cover (e.g.: marten bite):

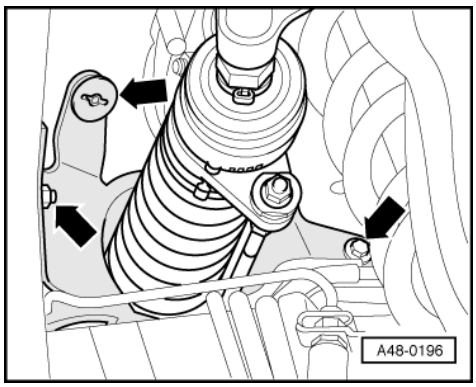

- -> Detach the damaged engine compartment cover and pull it out slightly.
- Cut the cover open and remove it.

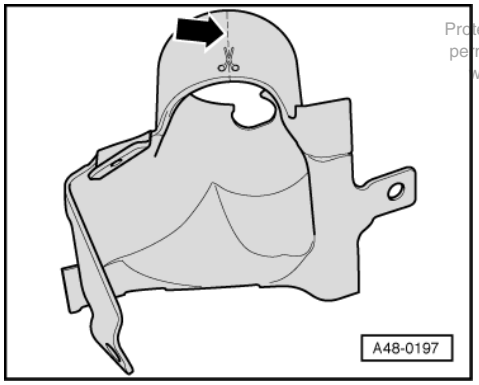

- -> Cut the new cover at the pre-marked cutting line and lay it over the track rod.

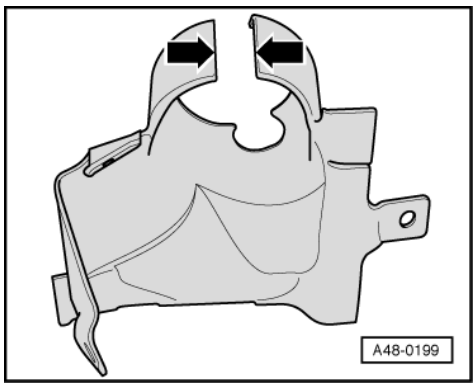

- -> Bond the cover back together again at the cutting line.

We recommend adhesive:

D 002 100

Notes:

- Note the safety and useage instructions on the packaging of the adhesive.
- The cover is manufactured from thermoplastic elastomere (TPE), with the constituents styrene, ethylene and butylene.
- For this reason, only use adhesives which do not attack these materials.
- Moreover, do not use any adhesives which attach polyethylene or styrofoam.

15.2 - Checking supply pressure of vane pump

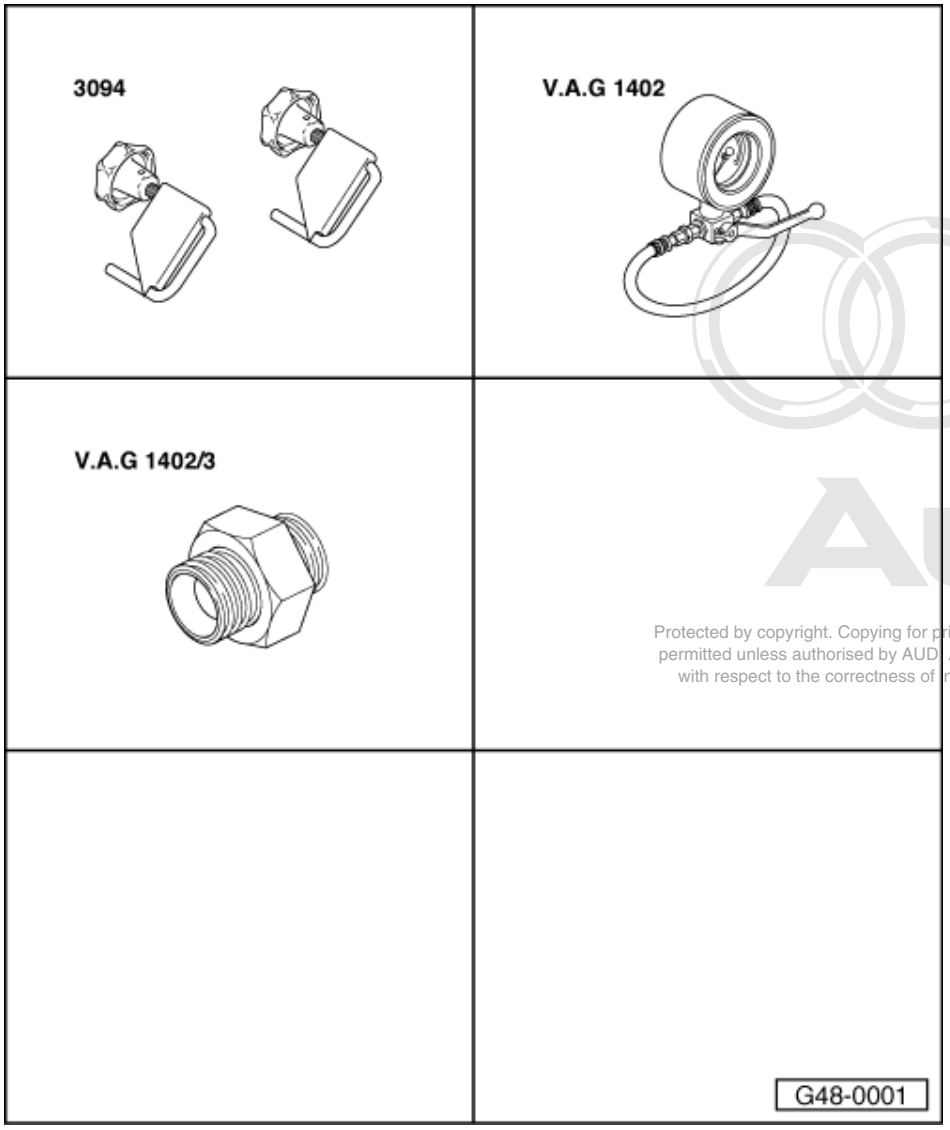

Vehicles with 6-cylinder TDI engine

Special tools and workshop equipment required

- 3094 Hose clamp
- V.A.G 1402 Tester for power-assisted steering
- V.A.G 1402/3 Adapter

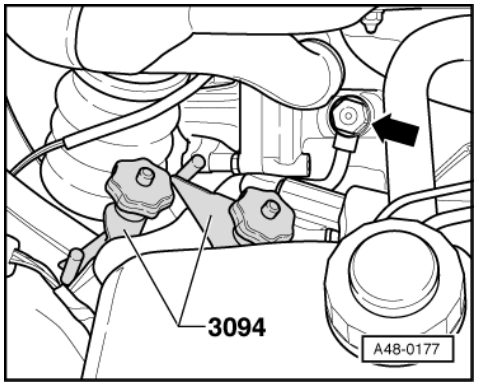

- -> Pinch off suction and return pipes with hose clamps -3094-.
- Unscrew expansion hose from vane pump.

- Attach sealing ring, part no. N 013 844 4, to adapter -V.A.G 1402/3-.

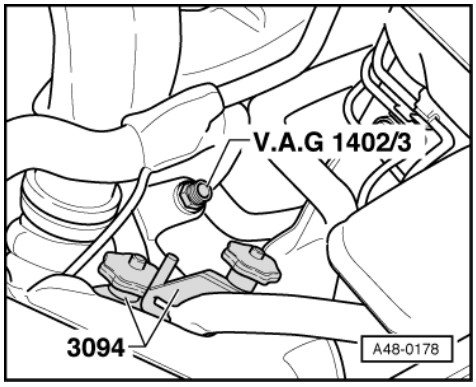

- -> Screw adapter -V.A.G 1402/3- into vane pump in place of banjo bolt.
- Screw hose for pressure gauge -V.A.G 1402- onto adapter -V.A.G 1402/3-.

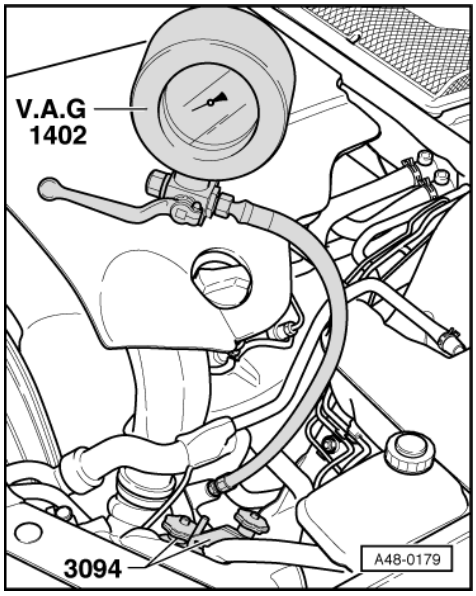

- -> Close pressure gauge shut-off valve (lever set to left).
- Remove hose clamps -3094- and top up fluid in reservoir, if necessary.

Checking pressure:

To avoid damaging the pump, note the following:

- Do not allow the engine to run for more than 10 seconds when carrying out this test.
- Start the engine without pressing the accelerator and let it run at idling speed.
- Read off the pump pressure at idling speed immediately after starting the engine (if necessary, have a second mechanic read off the pressure).
- The pressure will drop during the test; take the highest pressure reading as the test value
  Specified value: 120 - 130 bar of pressure.

- Switch off engine.

  Replace vane pump if specified value is not attained => Page 361

- Bleed steering system => Page 317
- Check hydraulic fluid level =>Page 316

- Check steering system for leaks =>Page 318

15.3 - Assembly overview of vane pump

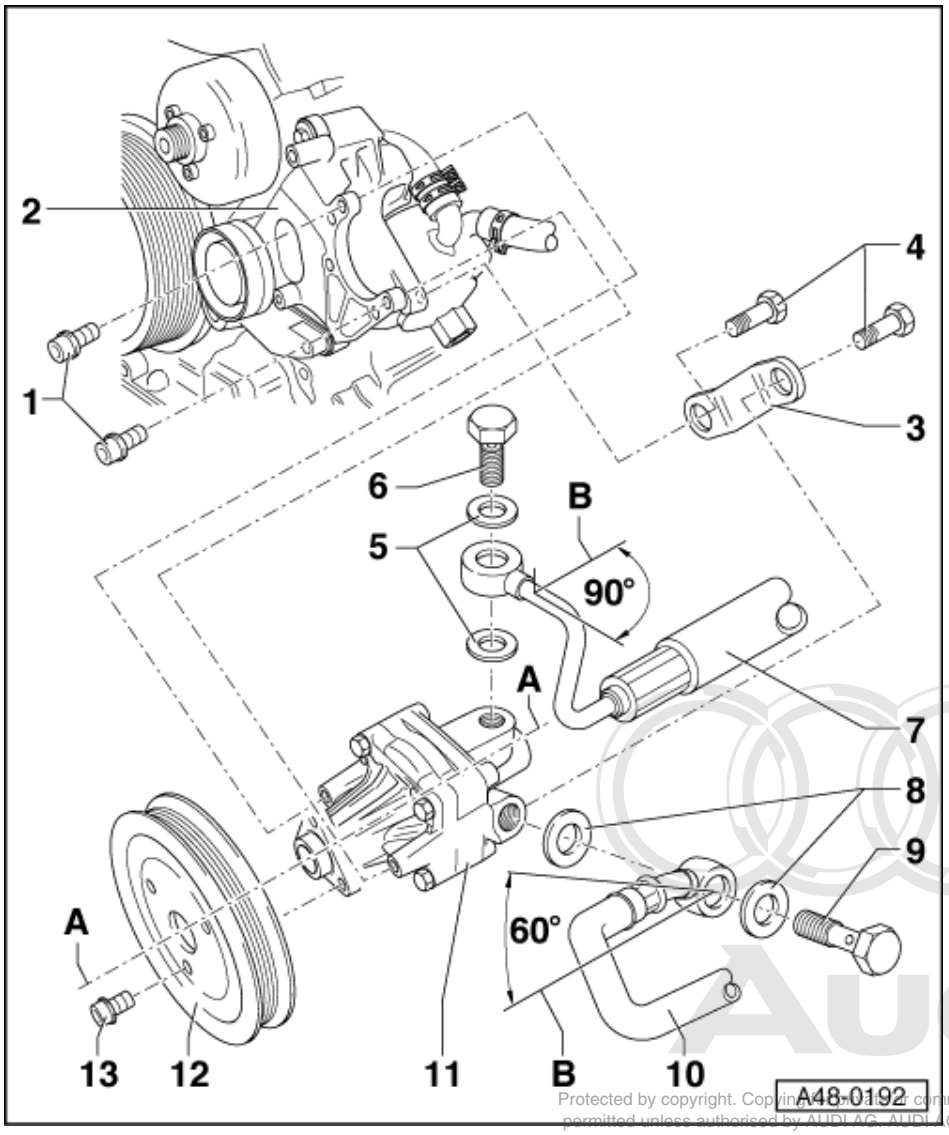

Vehicles with 6-cylinder TDI engine

Notes:

- Replace sealing rings.
- Do not re-use hydraulic fluid which has been drained off.
- Hydraulic fluid: Part no. G 002 000
- The auxiliary lines -B- run parallel to pump axis -A-
- Assembly instructions for high pressure hose for self-levelling suspension => Fig. 2

1 Combi bolt, 25 Nm
2 Bracket
- Note screw bores for the pump
  => Fig. 1

3 Retaining washer
4 Hexagon bolt, 25 Nm

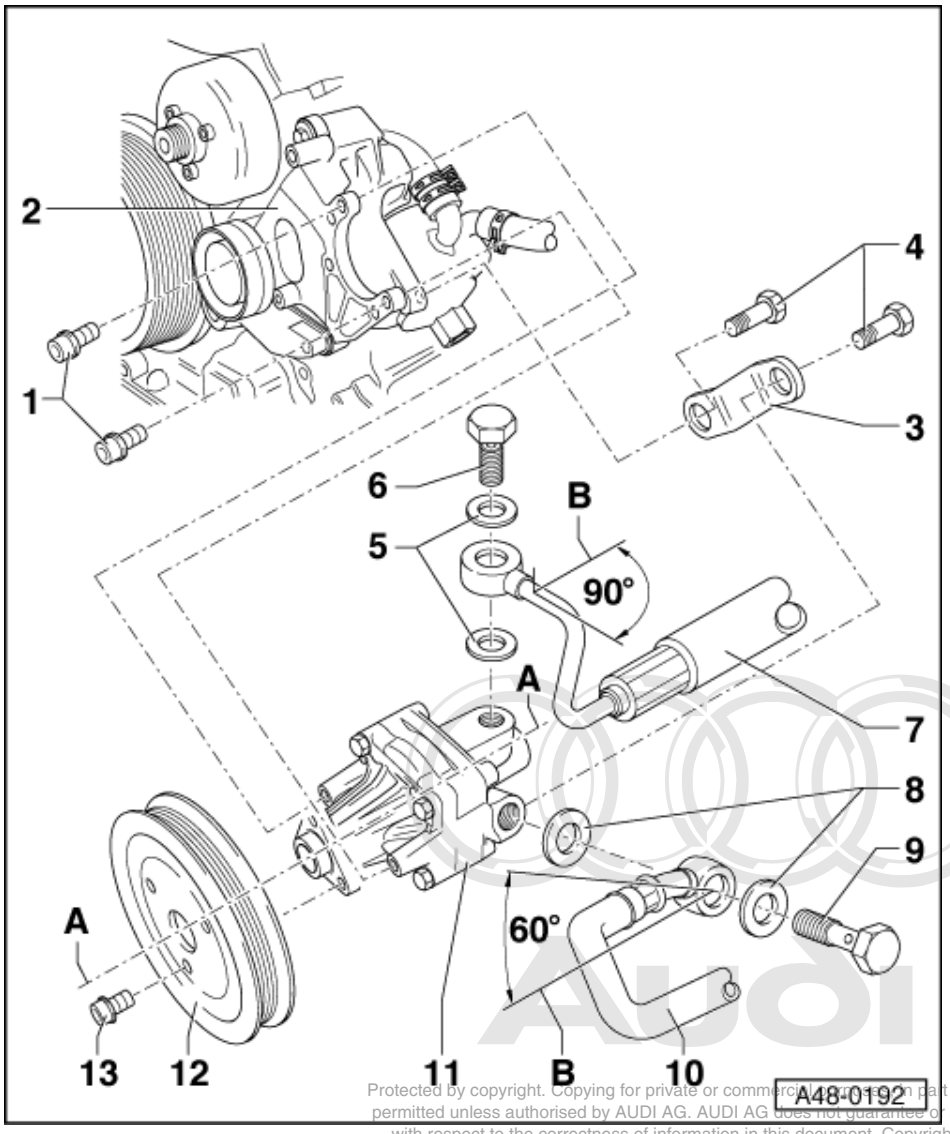

5 Sealing ring
- Always replace

6 Banjo bolt, 50 Nm

7 Expansion hose
- Vane pump - steering box
- Note installation position, risk of chafing
- The auxiliary line -B- runs parallel to pump axis -A-

8 Sealing ring
- Always replace

9 Banjo bolt, 47 Nm

10 Suction hose
- Vane pump - expansion tank
- Note installation position, risk of chafing
- The auxiliary line -B- runs parallel to pump axis -A-

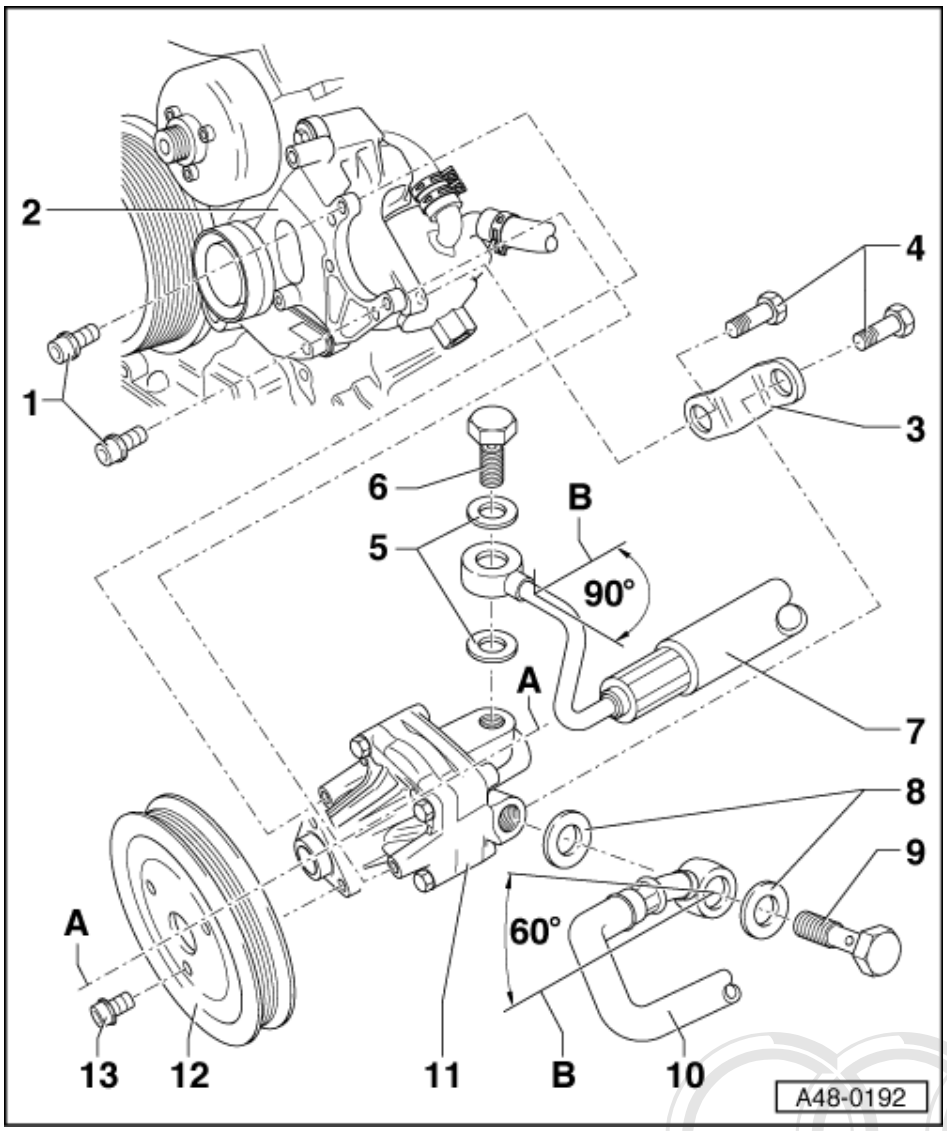

11 Vane pump

- Check delivery pressure
  => Page 356
- Removing and installing
  =>Page 361
- Before installing, fill with hydraulic fluid at suction end and crank by hand until fluid emerges at pump outlet.
- Note screw bores for the pump
  => Fig. 1

12 Belt pulley

13 Hexagon socket head bolt, 25 Nm

- When loosening and tightening counterhold with special tool -3212-

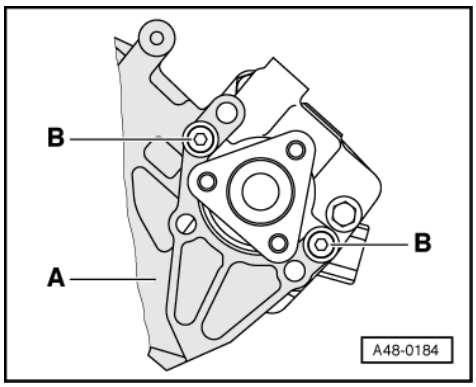

Fig.1 -> Screw bores for vane/tandem pump

- Screw pump into the bores marked with -B- of the bracket -A-

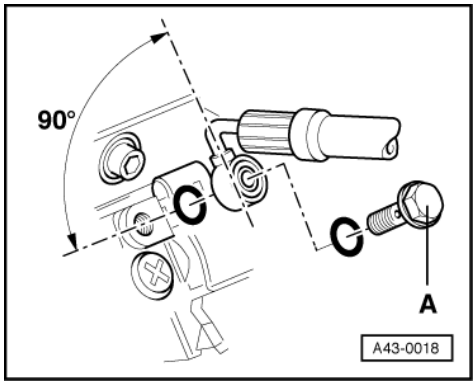

-> Fig.2 High pressure hose to tandem pump installation instructions

Applies to 8-cyl. petrol engines and 6-cylinder TDI engines.

A = 25 Nm

Note:

The high pressure hose is only fitted on vehicles with self-levelling suspension.

15.4 - Removing and installing vane pump

Vehicles with 6-cylinder TDI engine

Removing

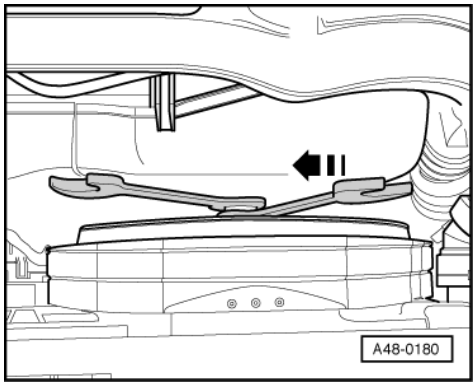

- Unbolt viscous fan.
- -> 2 open-end spanners with width across flats of 32 mm are required.
- To open counterhold with a wrench and turn second into direction of arrow.

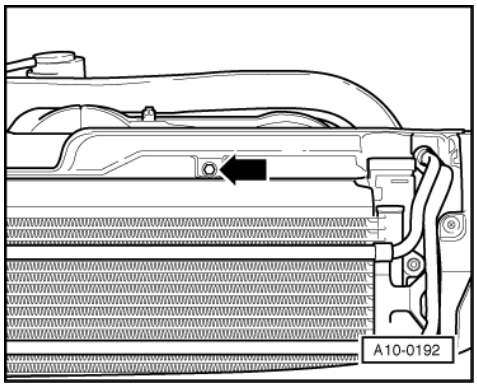

- -> Remove air duct for the viscous fan. Unscrew bolt -arrow- from the front for this purpose.

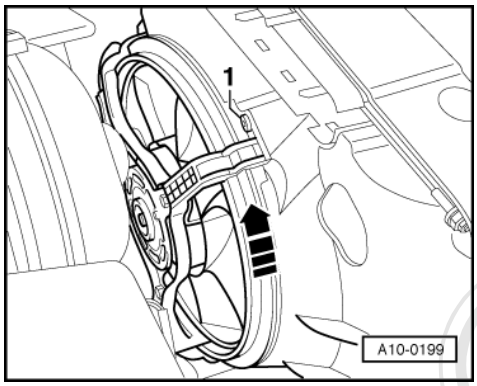

- Remove the air intake duct leading to the air cleaner.
- -> Remove electric fan; this involves pushing out pin -1- and removing clip.
- Detach cable for electric fan.
- Turn electric fan in direction of arrow and lay it aside.

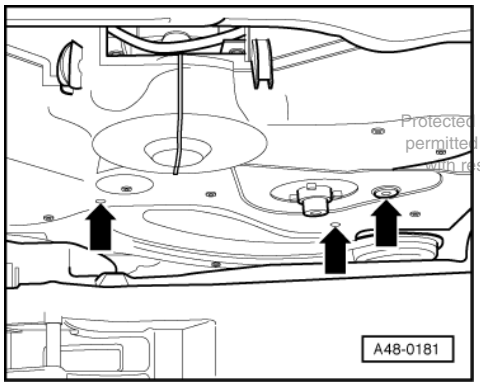

- -> Unscrew cover of ribbed belt (3x).

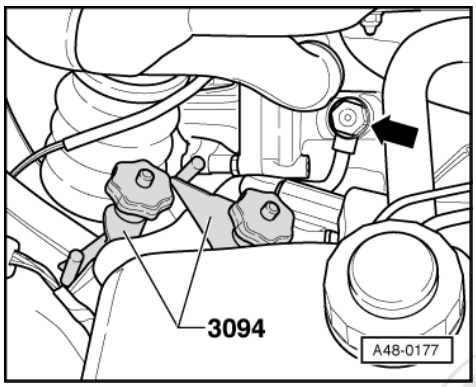

- -> Pinch off suction and return pipes with hose clamps -3094-.
- Detach expansion hose and if necessary high pressure pipe from pump.

Note:

The high pressure hose is only fitted on vehicles with self-levelling suspension.

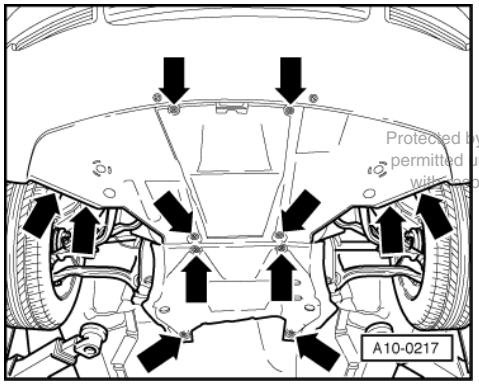

- -> Remove noise insulation.

Mark the direction of rotation before removing the ribbed belt. If the belt runs in the opposite direction when it is refitted, this can cause breakage. Ensure that the belt is correctly seated in the pulleys when installing.

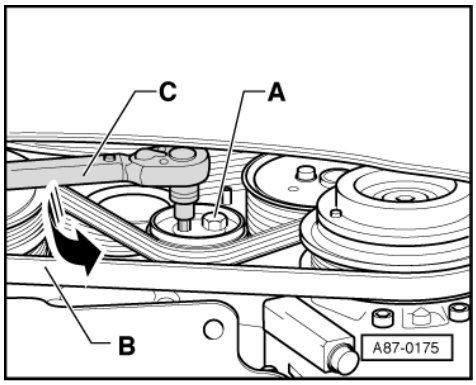

Removing ribbed belt for A/C compressor:

- -> Slacken bolt -A- on tensioning roller for A/C compressor and take off ribbed belt.

Removing ribbed belt for vane pump:

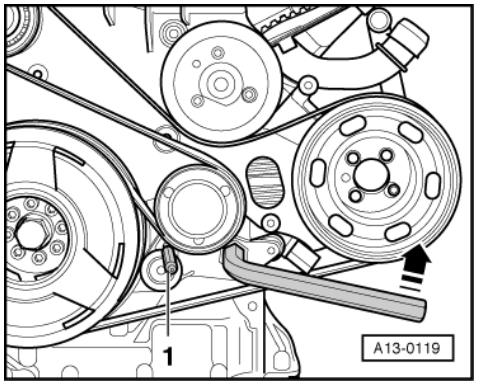

- -> Slacken ribbed belt by turning Allen key (A/F 17) in direction of arrow, and insert a 4 mm dia. pin ø Item -1- (e.g. punch).
- Remove belt.

Detaching compressor for air conditioner:

Notes:

- Take care not to bend pipes as they are still connected.

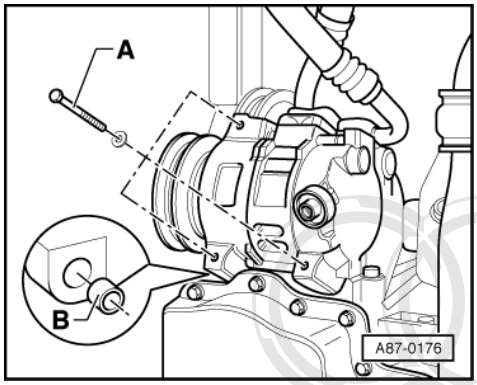

- After removing compressor, secure to chassis longitudinal member with wire or similar - do not leave compressor hanging from the refrigerant pipes.
- When installing compressor, ensure the locating sleeves -B- are properly positioned.

- -> Remove bolts -A- (tightening torque 25 Nm).

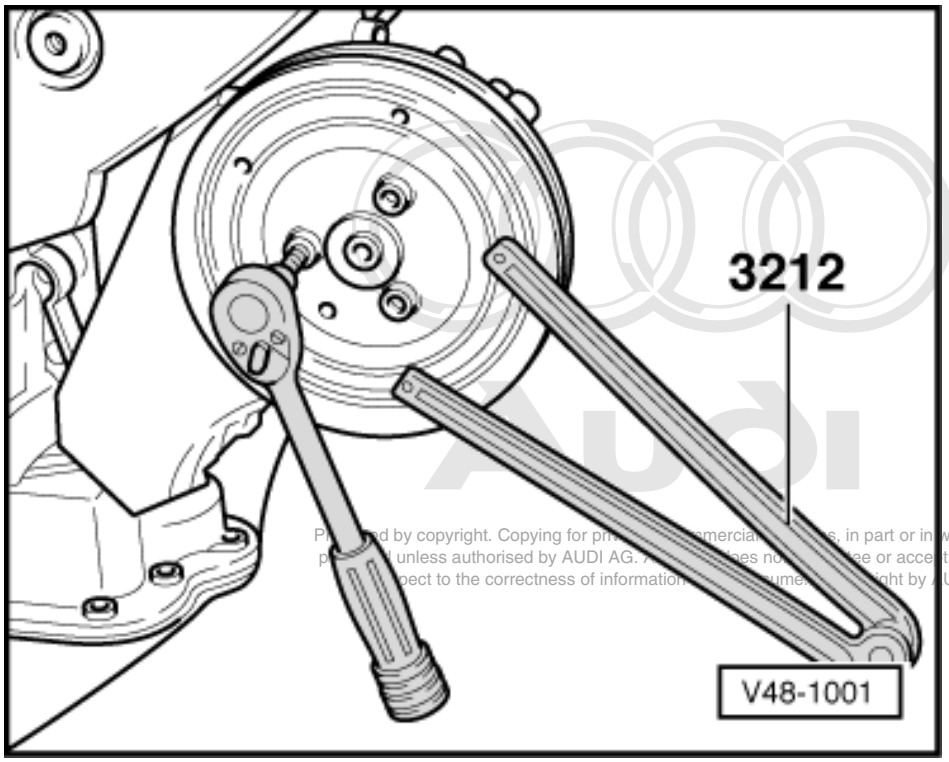

- -> Unbolt ribbed belt pulley on hydraulic pump, using pin wrench -3212- to counterhold.

Note:

Shown with engine removed for ease of illustration.

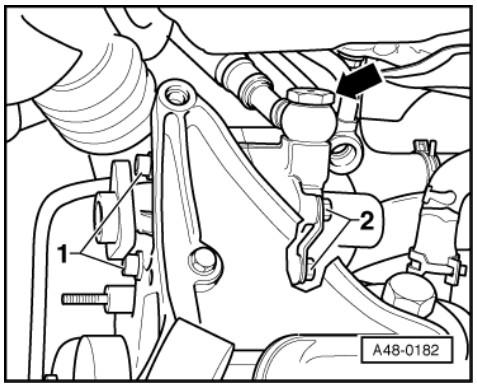

- -> Detach pressure hose -arrow- from pump.
- Seal connecting holes with plugs.
- Detach pump from retainer (Items -1- and -2-) and remove.

When installing, pay special attention to the following:

- Before installing a new pump, pour in hydraulic fluid at intake end and crank by hand until fluid emerges from the delivery end.
- Clean any areas in engine compartment which become fouled with fluid.
- Installation position of: Expansion- and suction hose => Page 361 , Fig. 2

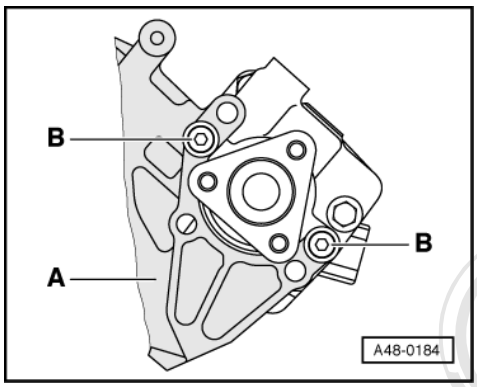

- -> Screw pump into bores marked with -B- of retainer -A-.
- Fit all bolts; tighten the two front bolts first, then the rear bolts.
- Fit suction hose with new seals.
- Screw on belt pulley.

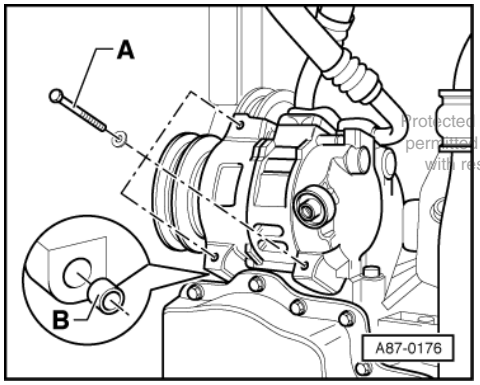

- -> Bolt air conditioner compressor to retainer with 25 Nm.

◆ When installing compressor, ensure the locating sleeves -B- are properly positioned.

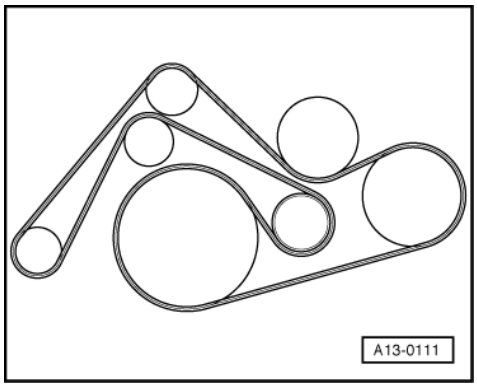

Installing ribbed belt for vane pump:

- -> Fit ribbed belt on crankshaft pulley and idler wheels first; fit onto tensioning roller last.

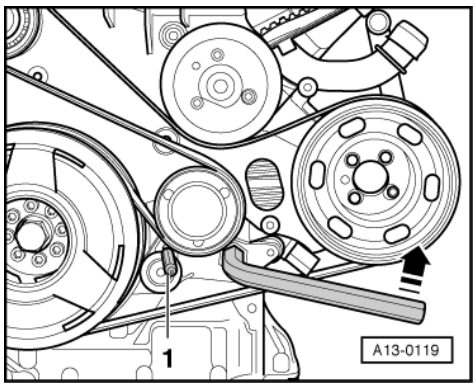

- -> Remove mandrel -1-; to do this, turn Allen key in direction of arrow.

Removing ribbed belt for A/C compressor:

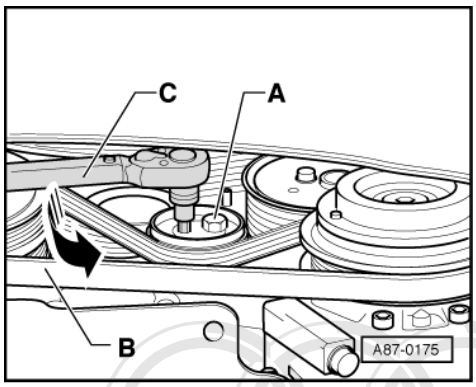

- Fit ribbed belt for A/C compressor.
- -> Apply torque wrench -C- as shown and pre-tension ribbed belt to 7 Nm by turning in direction of arrow (use 8 mm Allen key).
- Unscrew bolt -A- with torque wrench (tightening torque 25 Nm).
- Attach expansion hose and if necessary high pressure hose with new seals.
- Remove hose clamps -3094-.

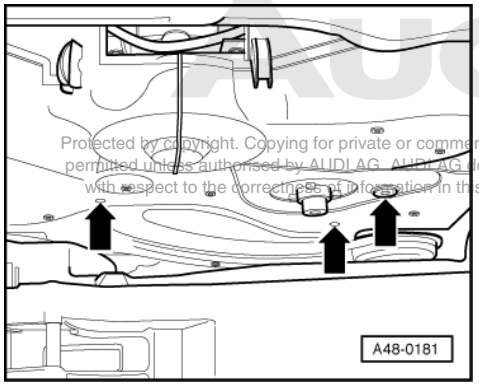

- -> Unscrew cover of ribbed belt (3x).
- Install the electric fan and the air intake duct to the air cleaner
- Fasten air duct for the viscous fan
- Screw in viscous fan.
- Bleed steering system => Page 317
- Check hydraulic fluid level =>Page 316
- Check steering system for leaks =>Page 318

16 - Assembly overview: Power steering/fluid circuit for 8-cylinder petrol engine

16.1 - Assembly overview: Power steering/fluid circuit for 8-cylinder petrol engine

General information

Servicing of vane pump is not envisaged. In the case of complaints, determine the cause by means of a pressure test and leak test. If a fault is detected, replace the vane pump.

Notes:

- Check steering system for leaks if there is a lack of fluid in the reservoir.
- If a leak is found in the area of the pipe connections, first check pipes/pipe connections for leaks, re-tighten if necessary and wipe dry.
- Replacement pumps are not filled with fluid. Prior to installation these must always be filled with hydraulic fluid G 002 000 and cranked by hand to avoid possible noise whilst driving or pump damage.
- Type of fluid: Hydraulic fluid G 002 000

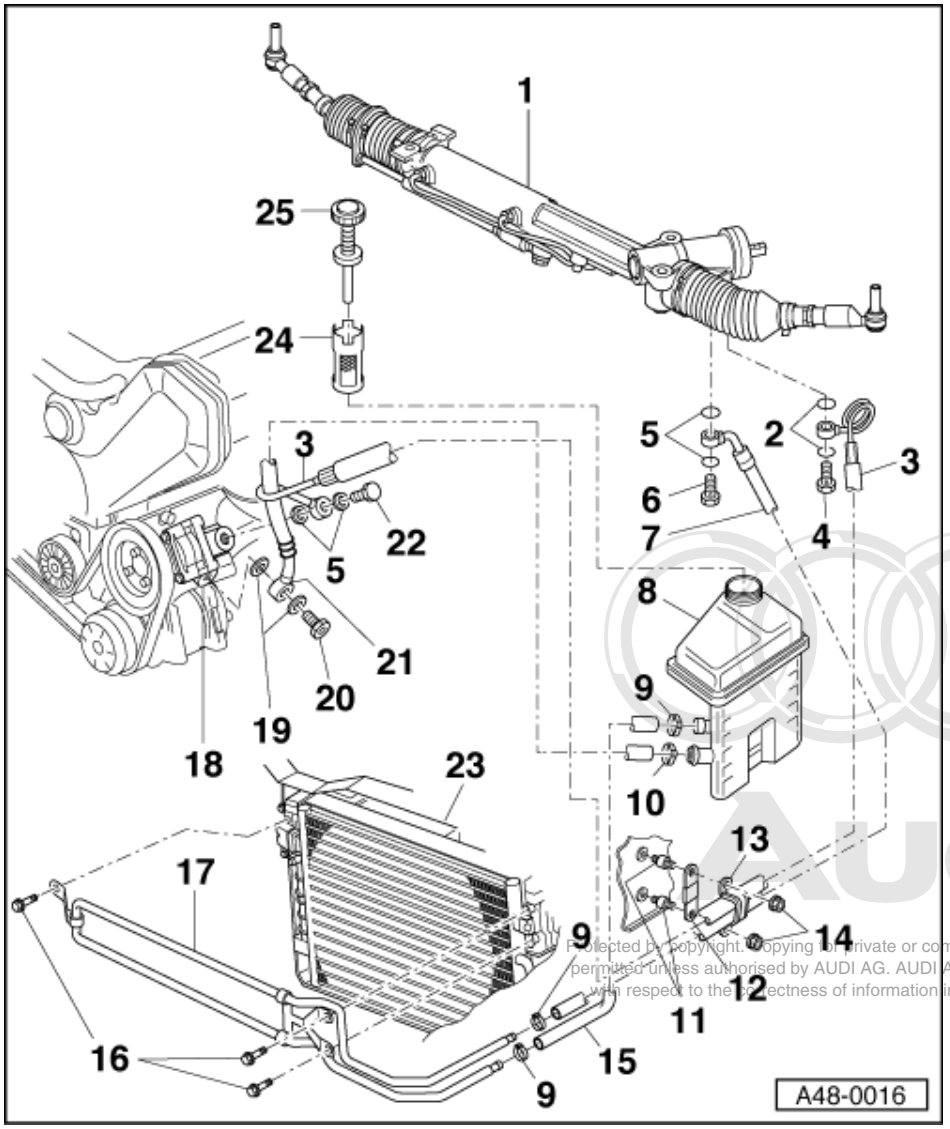

With the exception of the continuation of the hydraulic system pipes from left to right on the steering box and the threaded connection between pressure line/expansion hose on the longitudinal member, the fluid circuit of RHD vehicles corresponds to that of the LHD version.

When fluid circuit has been opened always:

- Check all unions for leaks, start engine and perform visual inspections.
- Check fluid level =>Page 316

1 Power-assisted steering box

- Assembly overview:
- Left-hand drive => Page 249
- Right-hand drive => Page 298
- Servicing => Page 293

Heat shield for steering damper =>Page 337 , Item 30 .

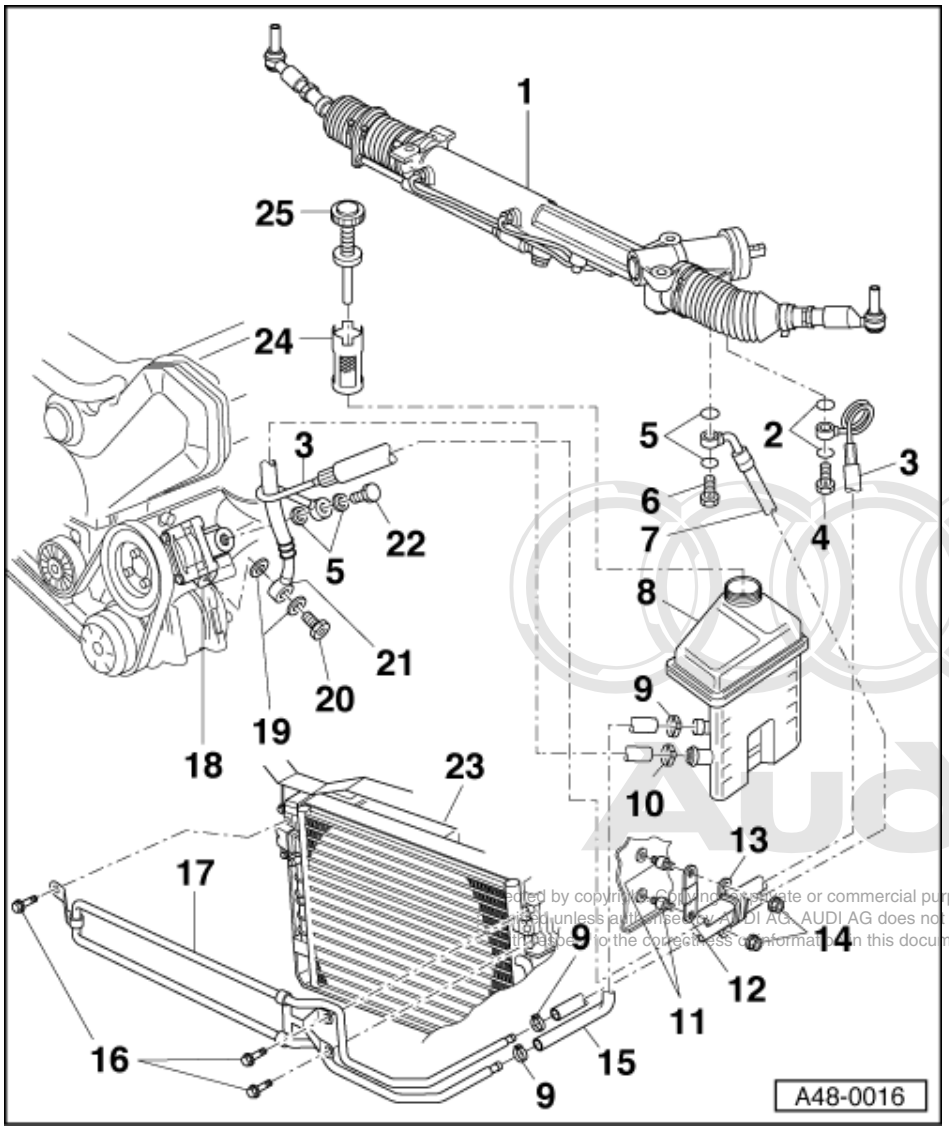

2 Sealing ring

- Always replace

3 Expansion hose

- Leads to steering box

4 Banjo bolt, 40 Nm

- With integrated non-return valve

5 Sealing ring

- Always replace

6 Banjo bolt, 47 Nm

7 Return hose

- Leads to steering box

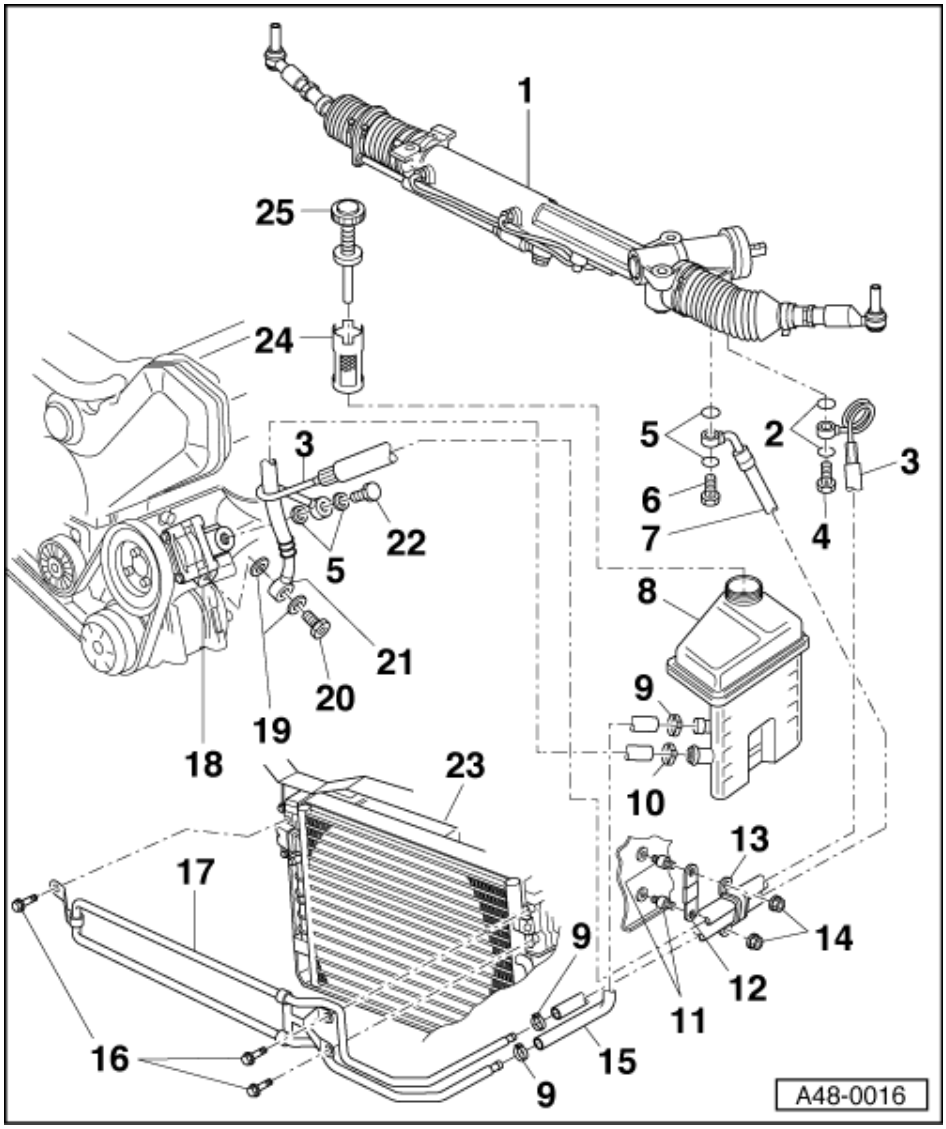

8 Expansion tank

- Refilling with hydraulic fluid, Part No. G 002 000, filling quantity 1.2 litres
- Plugged into hydraulic unit bracket
- Check fluid level =>Page 316

9 Clip

- Always replace
- Tensioning => Page 48-113
- Can also be replaced by screw-type hose clamp

10 Clip

- Always replace
- Tensioning => Page 48-113
- Can also be replaced by screw-type hose clamp

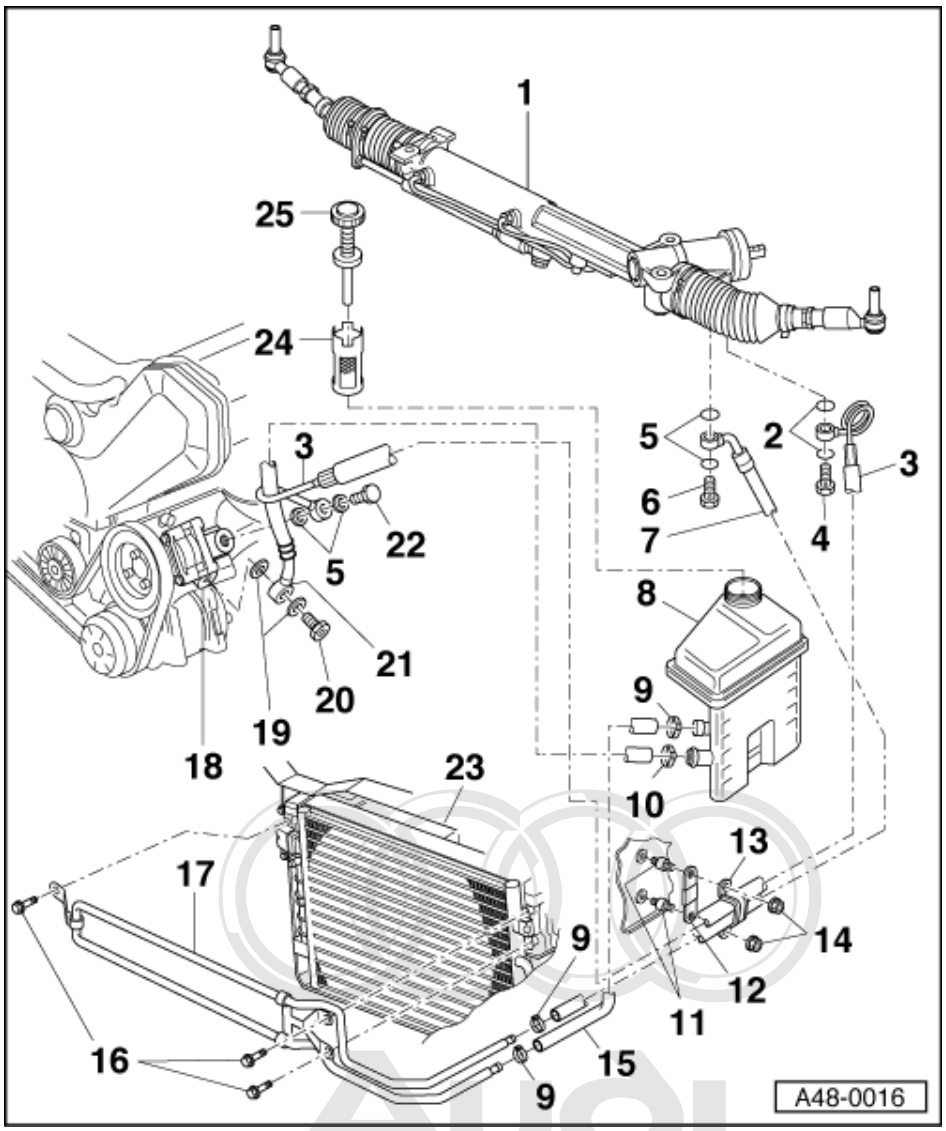

11 Bonded rubber bush

12 Retaining plate

- Note correct installation position:
- Solid rubber faces towards hose

13 Retaining clip

14 Hexagon nut, 5 Nm

15 Return hose

- Fluid cooler - expansion tank

16 Combi bolt, 10 Nm

17 Hydraulic fluid cooler

- Two versions with varying routing of lines

18 Vane pump

- Check delivery pressure
  => Page 373
- Removing and installing
  =>Page 378

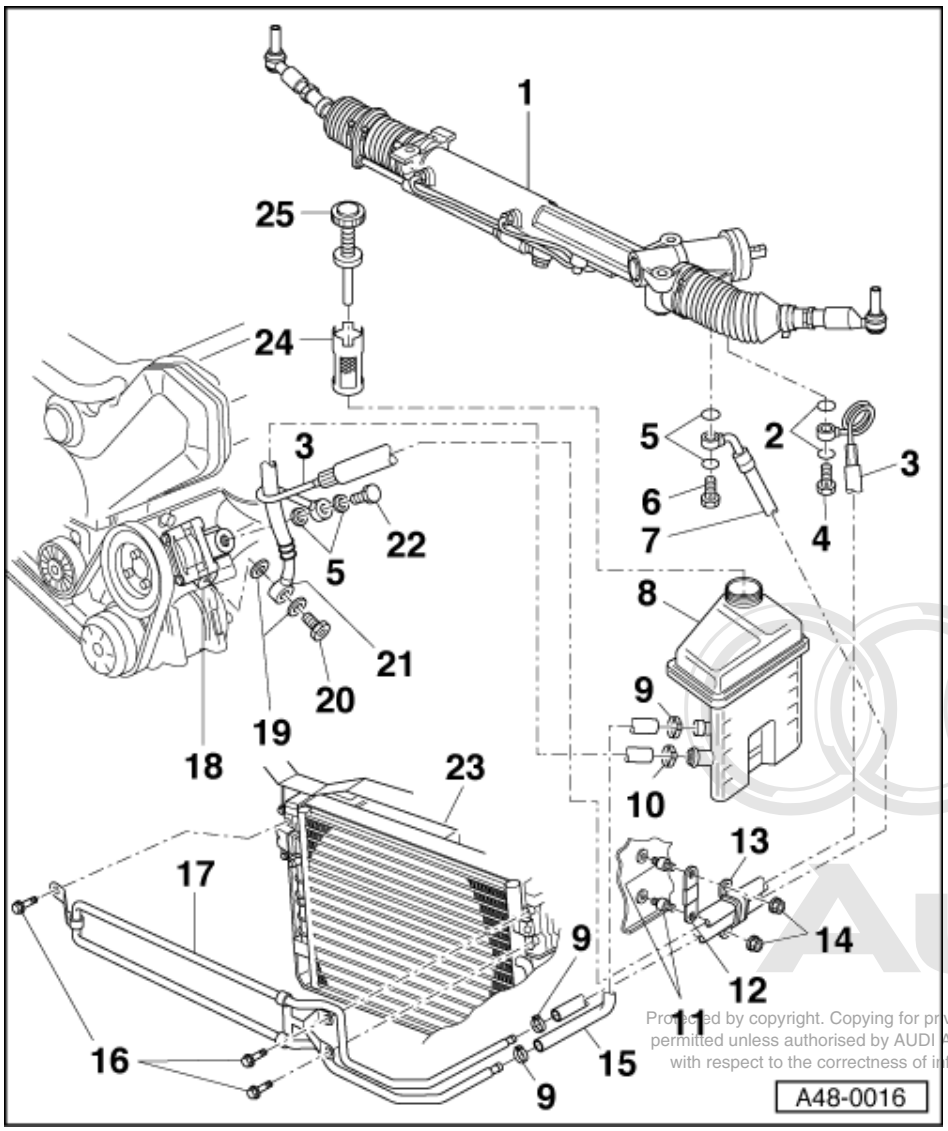

19 Sealing ring
- Always replace

20 Banjo bolt, 50 Nm

21 Suction hose

22 Banjo bolt, 47 Nm

23 Radiator

24 Strainer for expansion tank
- Clean using solvent

25 Cap with dipstick
- Check fluid level =>Page 316

16.2 - Checking supply pressure of vane pump

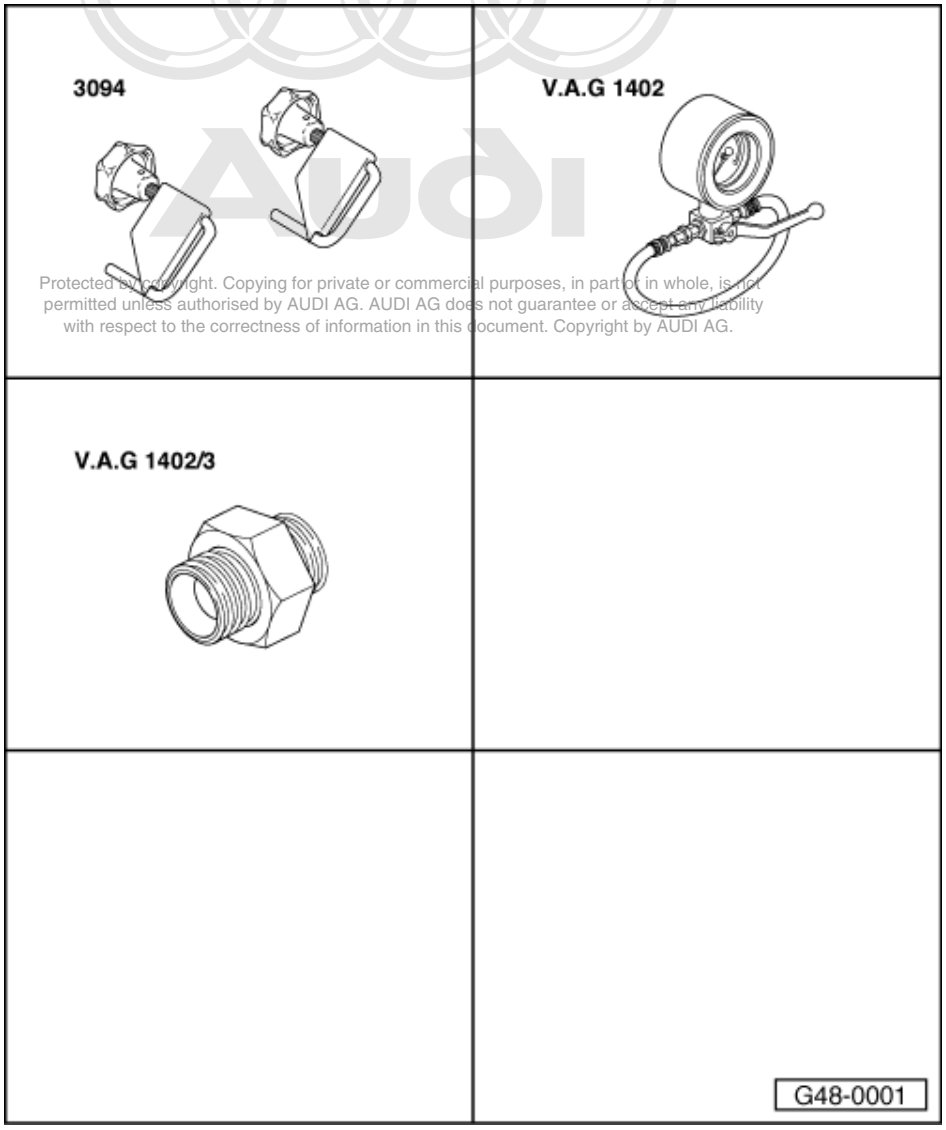

Vehicles with 8-cylinder petrol engine

Special tools and workshop equipment required

- 3094 Hose clamp
- V.A.G 1402 Tester for power-assisted steering
- V.A.G 1402/3 Adapter

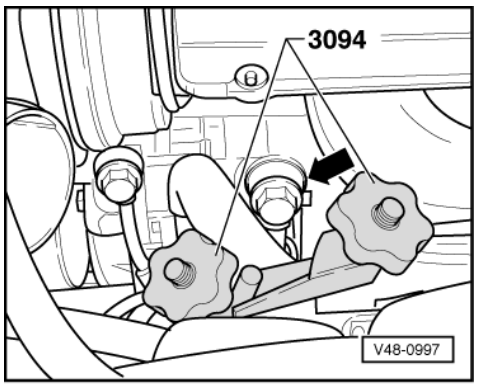

- -> Pinch off suction and return pipes with hose clamps -3094-.
- Unscrew expansion hose from vane pump.

- Attach sealing ring, part no. N 013 844 4, to adapter -V.A.G 1402/3-.

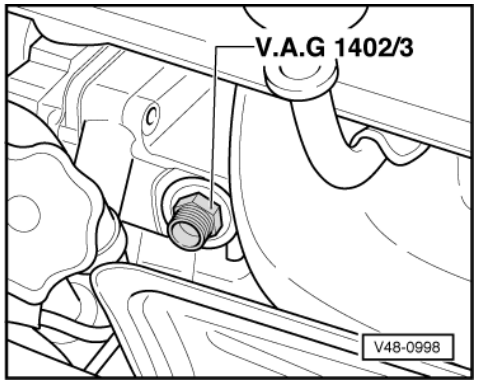

- Screw adapter -V.A.G 1402/3- into vane pump in place of banjo bolt.
- -> Screw hose for pressure gauge -V.A.G 1402- to adapter -V.A.G 1402/3-.

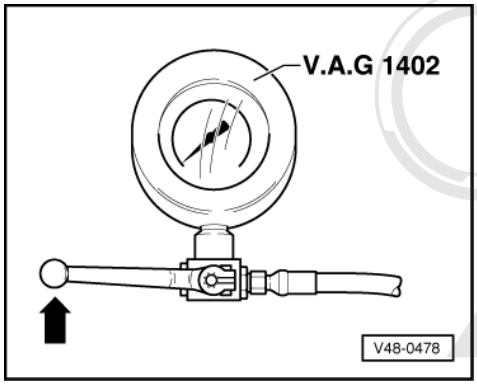

- -> Close pressure gauge shut-off valve (lever set to left).
- Remove hose clamps -3094- and top up fluid in reservoir, if necessary.

Checking pressure:

To avoid damaging the pump, note the following:

- Do not allow the engine to run for more than 10 seconds when carrying out this test.
- Start the engine without pressing the accelerator and let it run at idling speed.
- Read off the pump pressure at idling speed immediately after starting the engine (if necessary, have a second mechanic read off the pressure).

- The pressure will drop during the test; take the highest pressure reading as the test value
  Specified value: 120 - 130 bar of pressure.

- Switch off engine.

  Replace vane pump if specified value is not attained => Page 378

- Check hydraulic fluid level =>Page 316
- Bleed steering system => Page 317
- Check steering system for leaks =>Page 318

16.3 - Assembly overview of vane pump

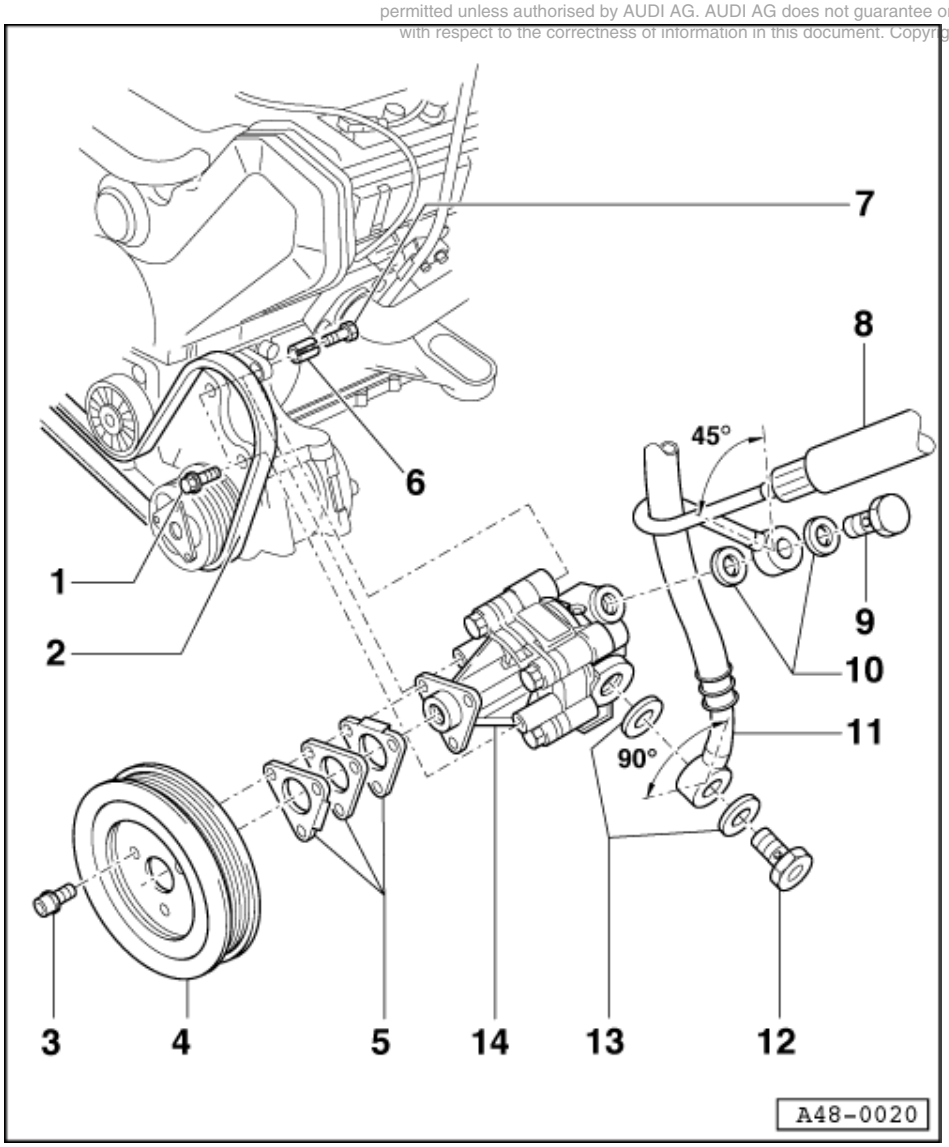

Vehicles with 8-cylinder petrol engine

Notes:

- Replace sealing rings.
- Do not re-use hydraulic fluid which has been drained off.
- Hydraulic fluid: Part no. G 002 000

- On replacing vane pump, always check alignment of belt pulleys of air-conditioner compressor and vane pump.

1 Combi bolt, 25 Nm
2 Ribbed belt
- Mark running direction of ribbed belt. Running the belt in opposite direction can lead to damage
- Check alignment of ribbed belt => Page 381

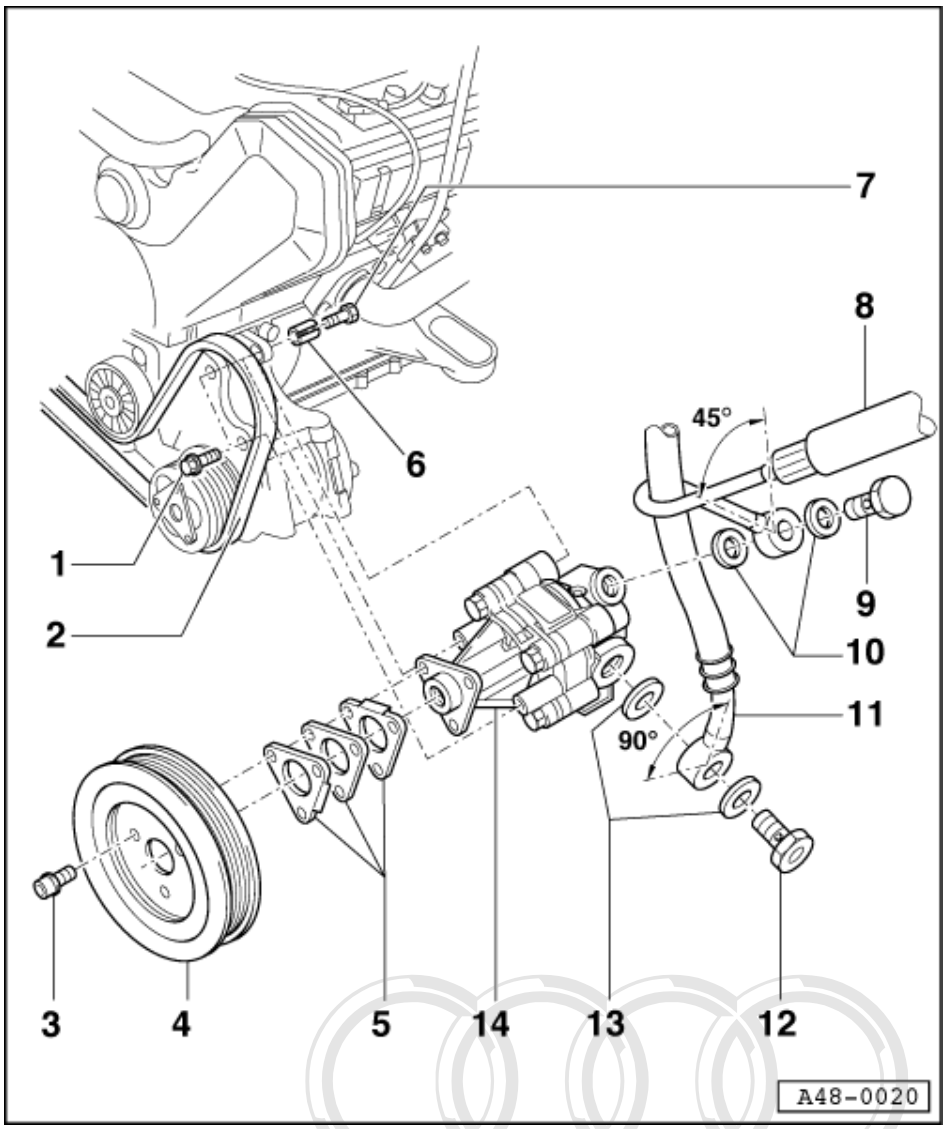

3 Hexagon socket head bolt, 25 Nm
4 Belt pulley
5 Shims
- Select such that belt pulleys of air conditioner compressor and vane pump are aligned.
- Check alignment of ribbed belt => Page 381

6 Slotted bushing
- Used to offset tolerances

7 Hexagon bolt, 25 Nm
8 Expansion hose
- Note installation position, risk of chafing

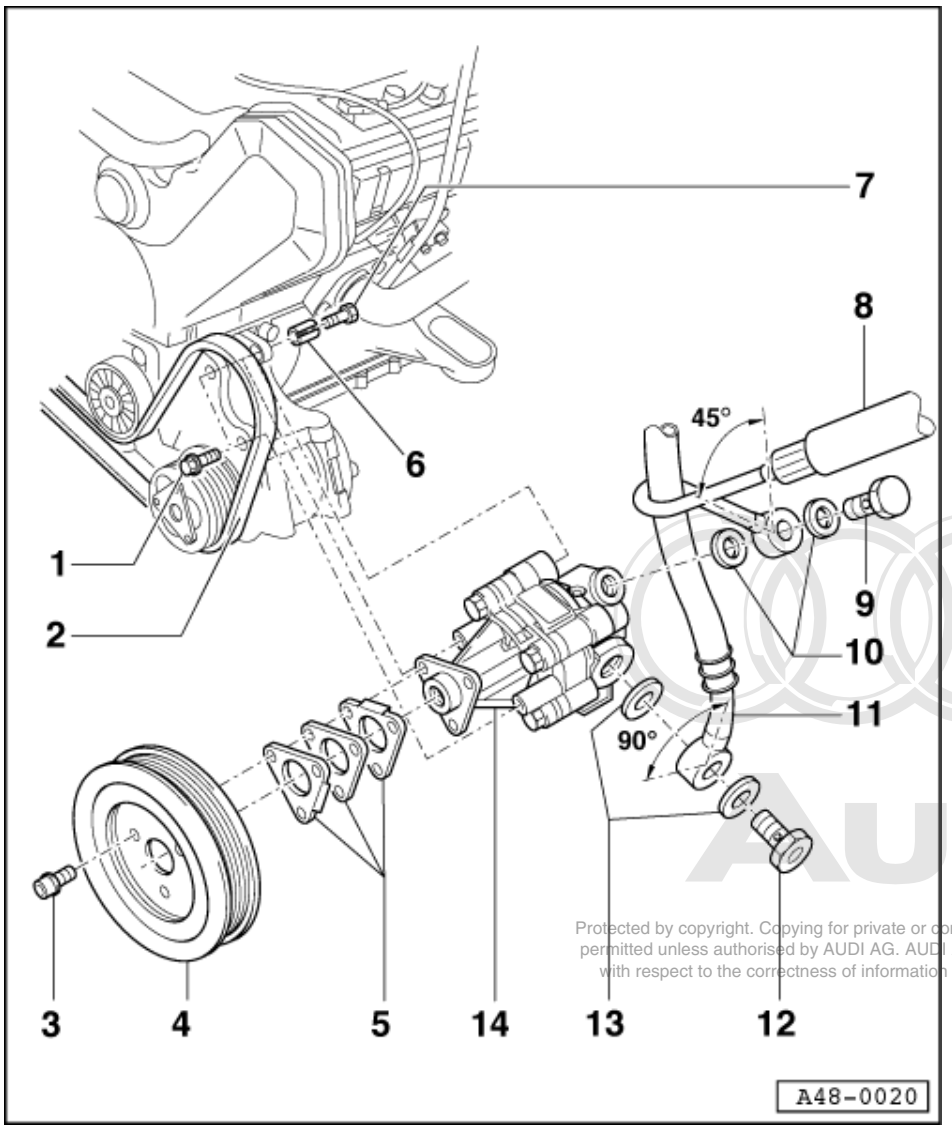

9 Banjo bolt, 47 Nm

10 Sealing ring

- Always replace

11 Suction hose

- Note installation position, risk of chafing

12 Banjo bolt, 50 Nm

13 Sealing ring

- Always replace

14 Vane pump

- Check delivery pressure
  => Page 373
- Removing and installing
  =>Page 378 .
- Before installing, fill with hydraulic fluid at suction end and crank by hand until fluid emerges at pump outlet.

16.4 - Removing and installing vane pump

Vehicles with 8-cylinder petrol engine

Removing

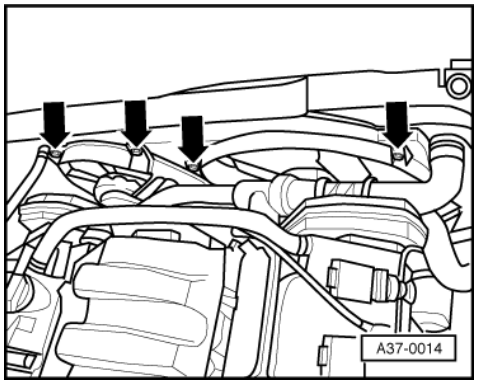

- -> Unscrew bolts at fan
- Remove fan in upwards direction and lay aside.

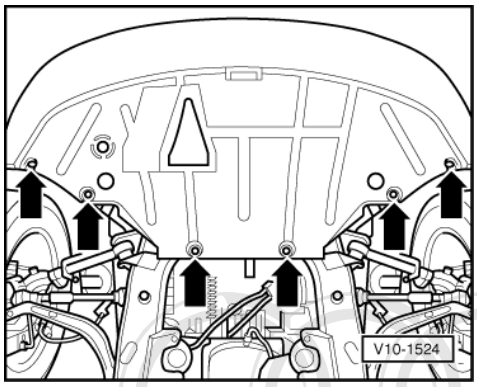

- -> Remove noise insulation beneath the engine.

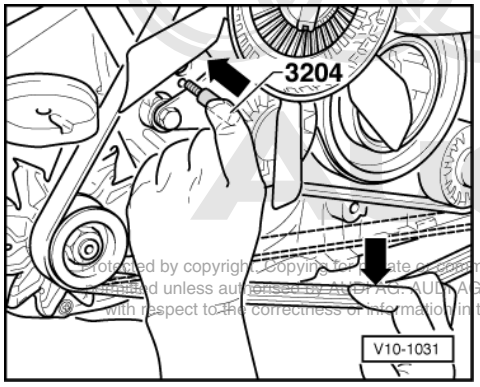

- -> Pull ribbed belt firmly downwards.
- Insert mandrel -3204- to secure.

Note:

Mark the direction of rotation before removing the ribbed belt. If the belt runs in the opposite direction when it is refitted, this can cause breakage. Ensure that the belt is correctly seated in the pulleys when installing.

- Removing ribbed belt from belt pulley.

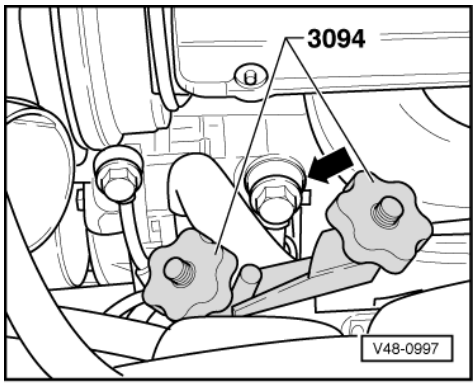

- -> Pinch off suction and return pipes with hose clamps -3094-.

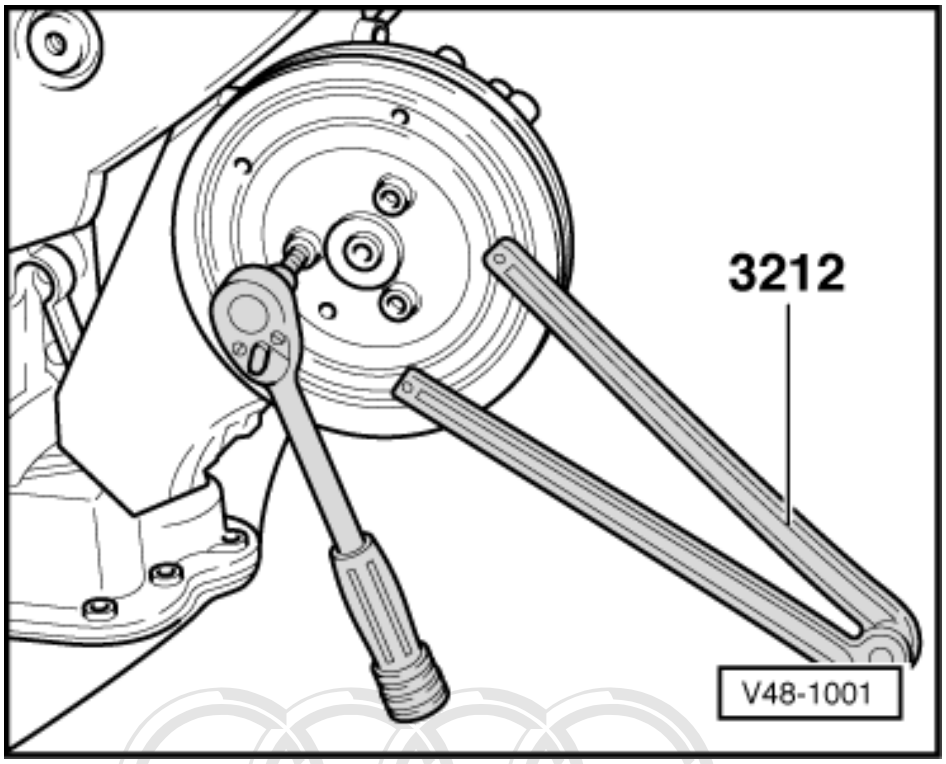

- -> Unbolt pulley from tandem pump.
- Use pin-type face wrench -3212- to counterhold.

Note:

Shown with engine removed for ease of illustration.

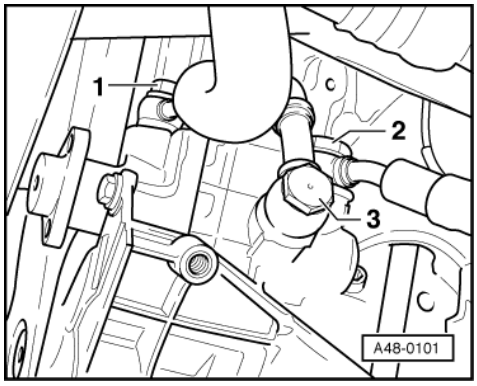

- -> Unscrew high-pressure hose -1-, expansion hose -2- and suction hose -3- from pump.

Note:

The high pressure hose is only fitted on vehicles with self-levelling suspension.

- Seal connecting holes with plugs.

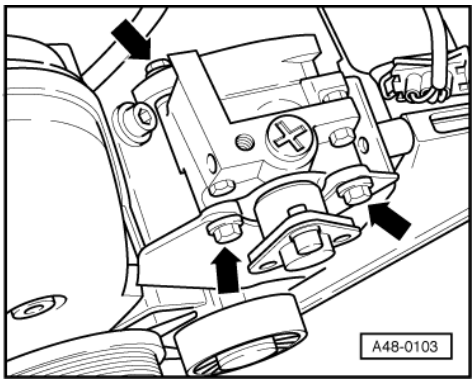

- -> Unscrew pump from bracket and remove.

When installing, pay special attention to the following:

- Before installing a new pump, pour in hydraulic fluid at intake end and crank by hand until fluid emerges from the delivery end.
- Clean any areas in engine compartment which become fouled with fluid.
- Installation position of: Expansion- and suction hose => Page 190 , Fig. 2 .

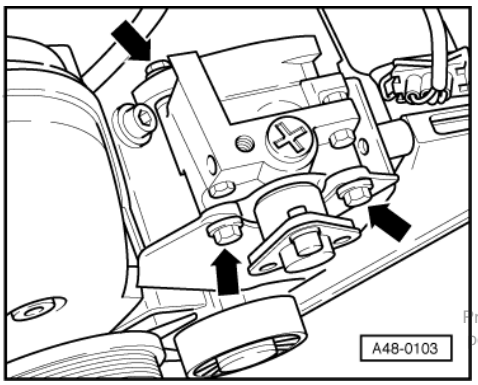

- -> Insert pump in bracket and screw in all three bolts by hand.
- Tighten two front bolts first and then the rear bolt.
- Fit expansion hose, high-pressure hose and suction hose with new gaskets.
- Remove hose clamps -3094-.

- Screw on belt pulley.

Ribbed belt alignment, ribbed belt alignment

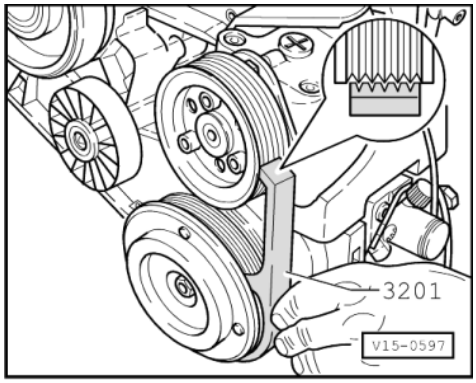

- -> Position alignment gauge -3201- on belt pulley of air conditioner compressor.
- Pump pulley must line up with pulley of air conditioner compressor.

If the two pulleys are not lined up:

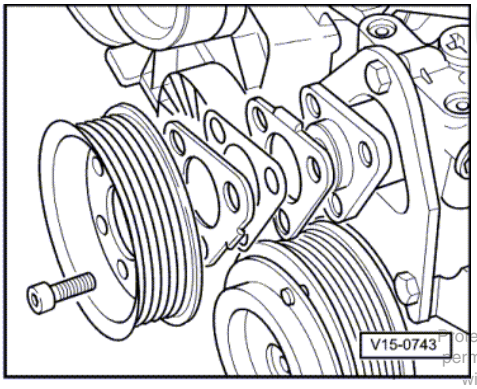

- Unbolt pump pulley.
- -> Use the shims available from the parts range to set gap such that the two belt pulleys are aligned.
- Fit ribbed belt and remove mandrel -3204-.
- Check hydraulic fluid level =>Page 316
- Bleed steering system => Page 317
- Check steering system for leaks =>Page 318

17 - Assembly overview: Power steering/fluid circuit for 8-cylinder petrol engine

17.1 - Assembly overview: Power steering/fluid circuit for 8-cylinder petrol engine

General information

Servicing of vane pump is not envisaged. In the case of complaints, determine the cause by means of a pressure test and leak test. If a fault is detected, replace the vane pump.

Notes:

- Check steering system for leaks if there is a lack of fluid in the reservoir.
- If a leak is found in the area of the pipe connections, first check pipes/pipe connections for leaks, re-tighten if necessary and wipe dry.
- Replacement pumps are not filled with fluid. Prior to installation these must always be filled with hydraulic fluid G 002 000 and cranked by hand to avoid possible noise whilst driving or pump damage.

- Type of fluid: Hydraulic fluid G 002 000

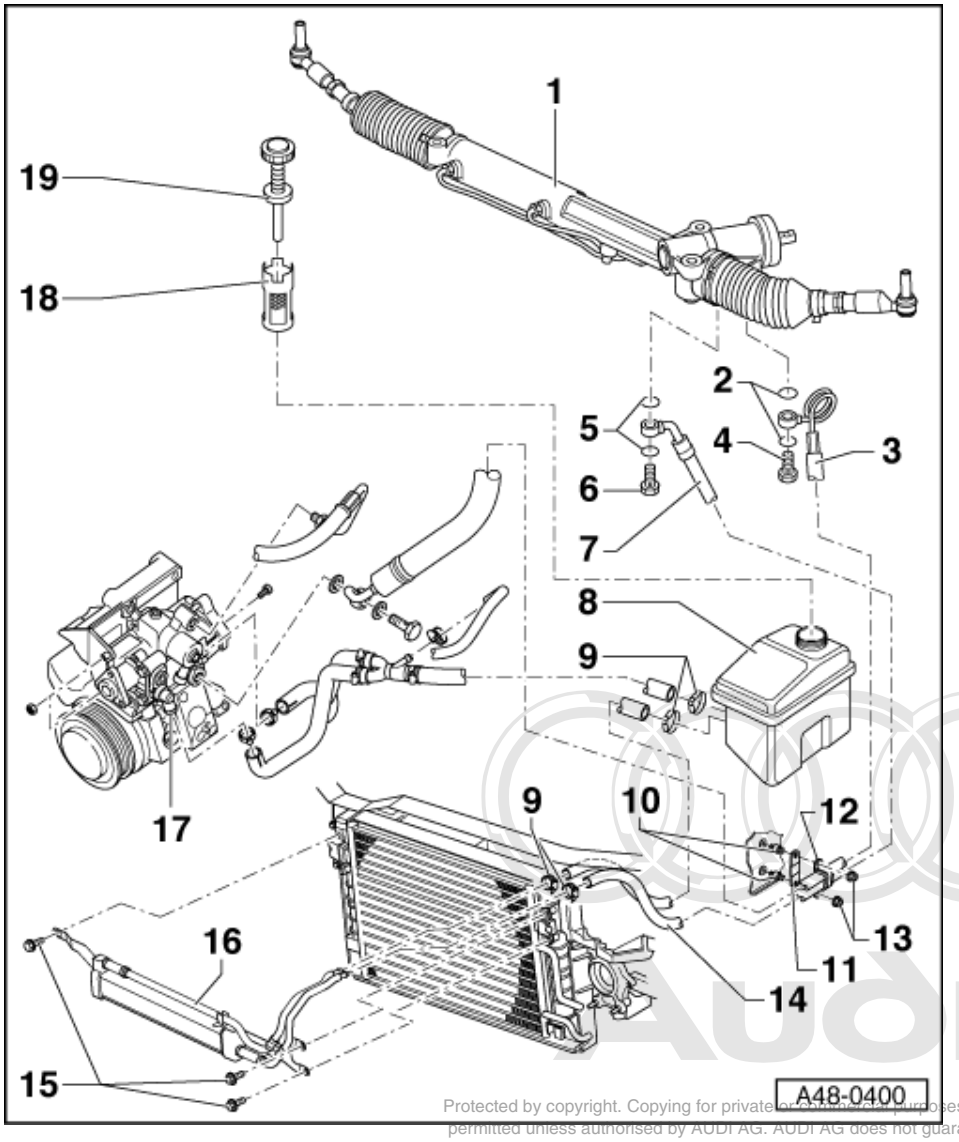

With the exception of the continuation of the hydraulic system pipes from left to right on the steering box and the threaded connection between pressure line/expansion hose on the longitudinal member, the fluid circuit of RHD vehicles corresponds to that of the LHD version.

When fluid circuit has been opened always:

- Check all unions for leaks, start engine and perform visual inspections.
- Check fluid level =>Page 316

1 **Power-assisted steering box**

- Assembly overview:
  - Left-hand drive => Page 249
  - Right-hand drive => Page 298
- Servicing => Page 293

Heat shield for steering damper

=>Page 337 , Item 30 .

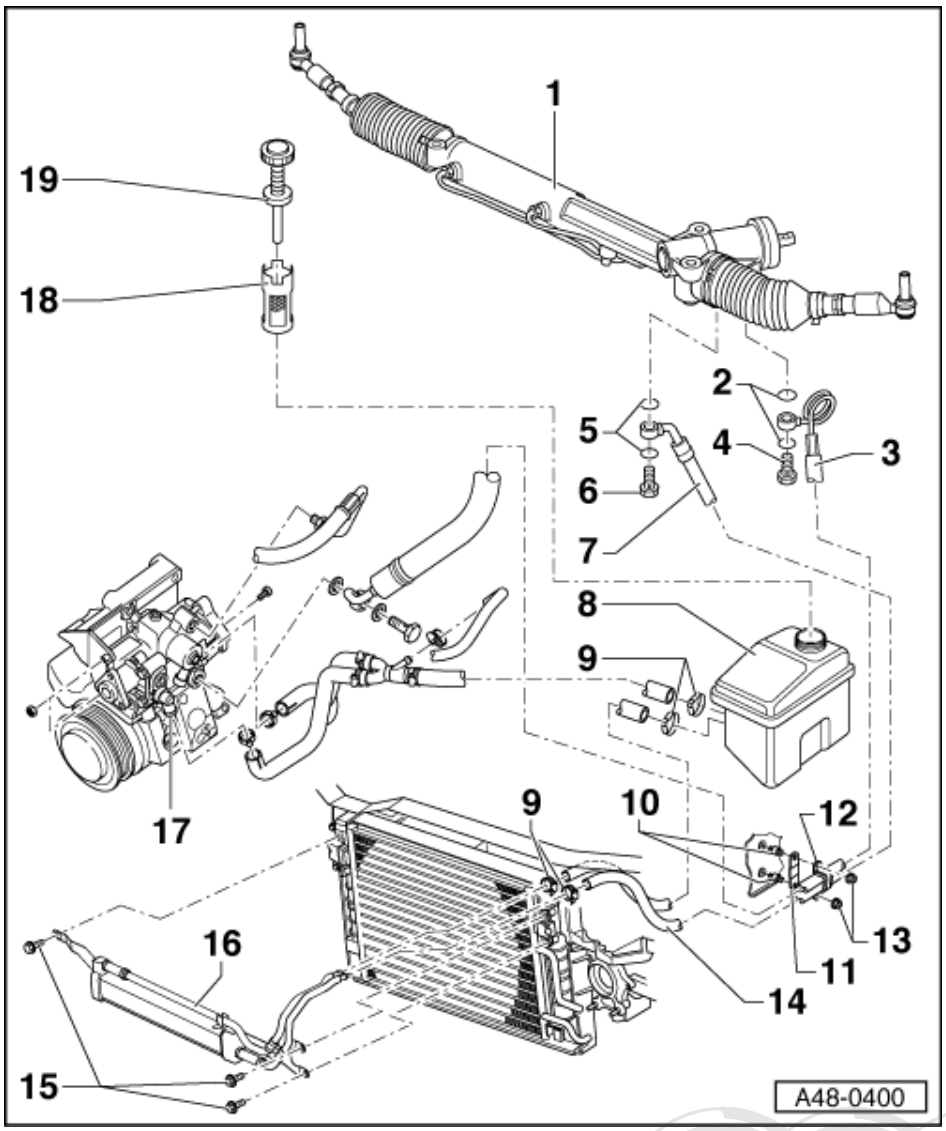

2 Sealing ring
- Always replace

3 Expansion hose
- Leads to steering box

4 Banjo bolt, 40 Nm
- With integrated non-return valve

5 Sealing ring
- Always replace

6 Banjo bolt, 47 Nm

7 Return hose
- Leads to steering box

8 Expansion tank
- Re-fill with hydraulic fluid, Part No. G 002 000
- Plugged into hydraulic unit bracket
- Check fluid level =>Page 316

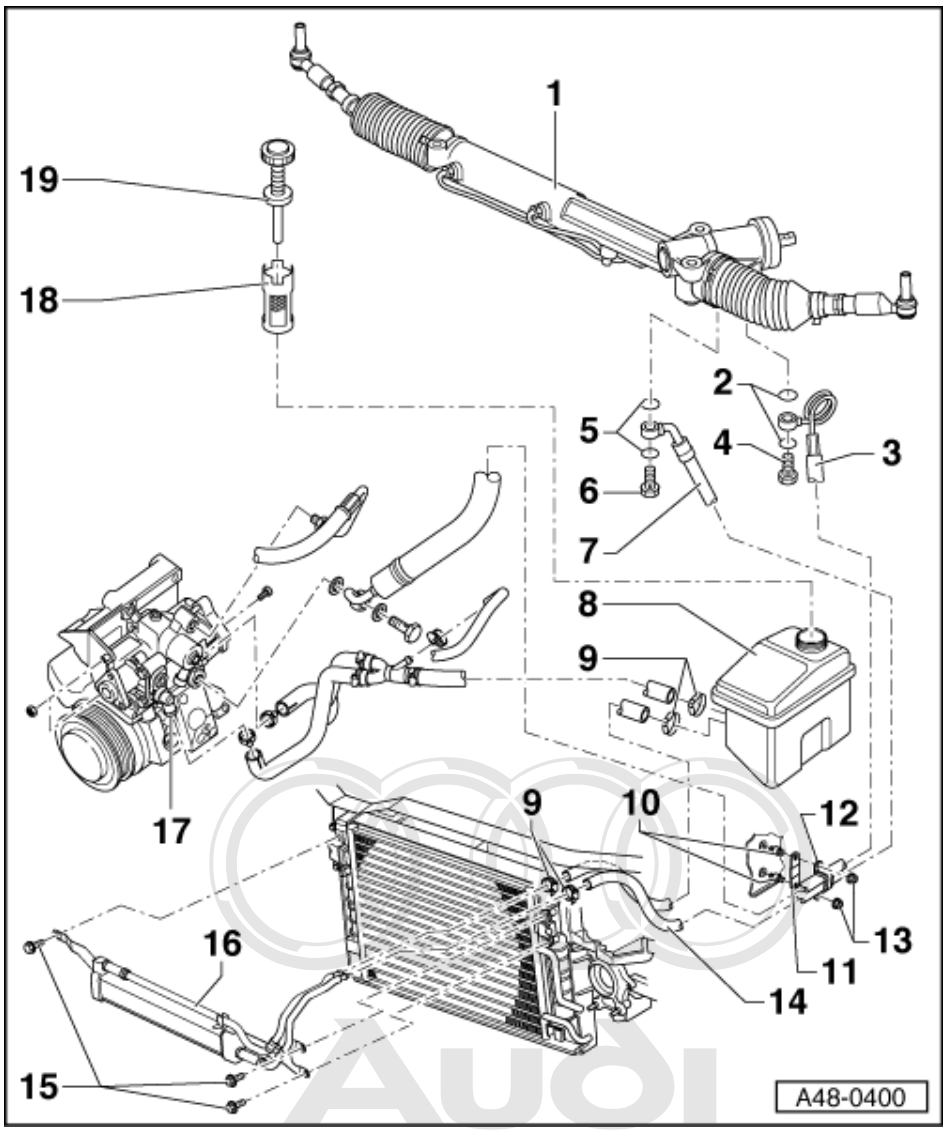

9 Clip
- Always replace
- Tensioning => Page 48-113
- Can also be replaced by screw-type hose clamp

10 Bonded rubber bush

11 Retaining plate
- Note correct installation position:
- Solid rubber faces towards hose

12 Retaining clip

13 Hexagon nut, 5 Nm

14 Return hose

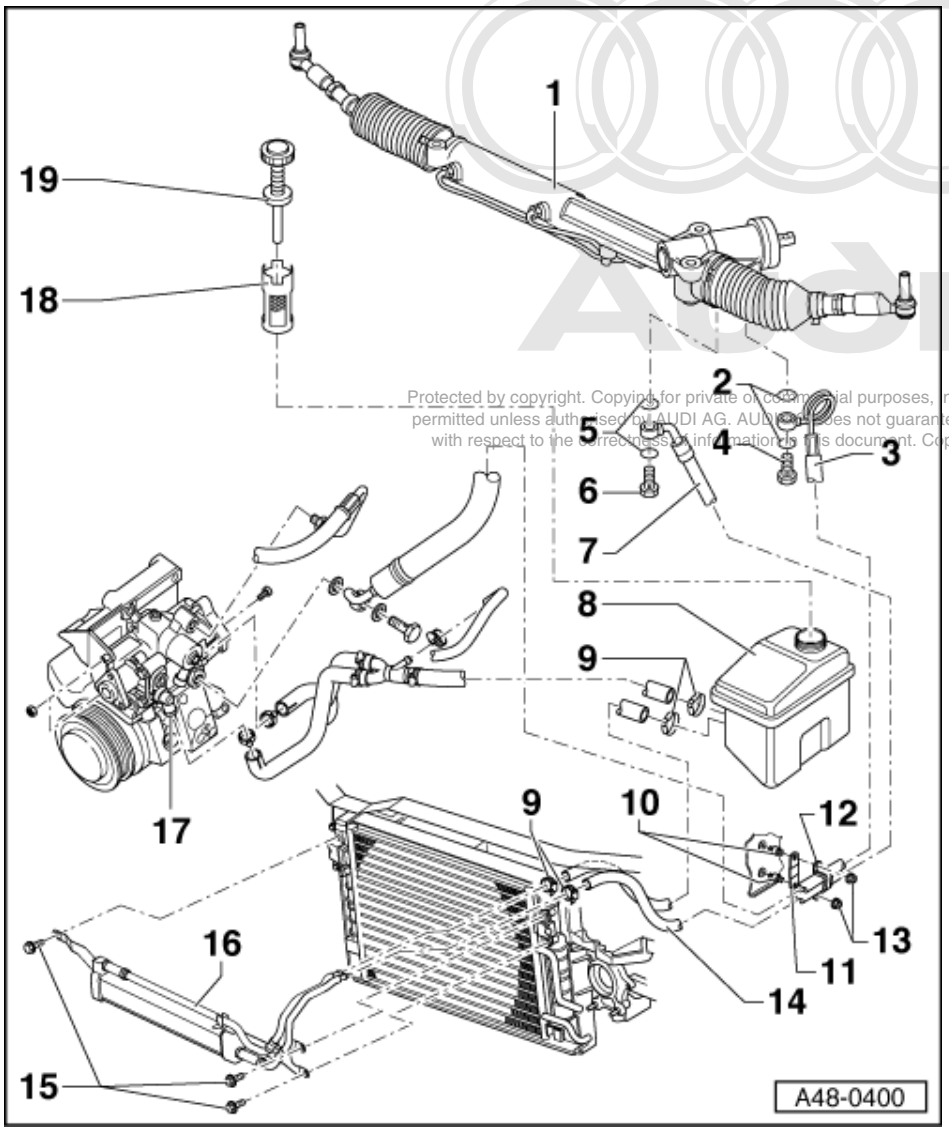

15 Combi bolt, 10 Nm

16 Hydraulic fluid cooler

- Two versions with varying routing of lines.

17 Vane pump

- Check delivery pressure
  => Page 386
- Removing and installing
  =>Page 392
- Connections => Page 389

18 Strainer for expansion tank

- Clean using solvent

19 Cap with dipstick

- Check fluid level =>Page 316

17.2 - Checking supply pressure of vane pump

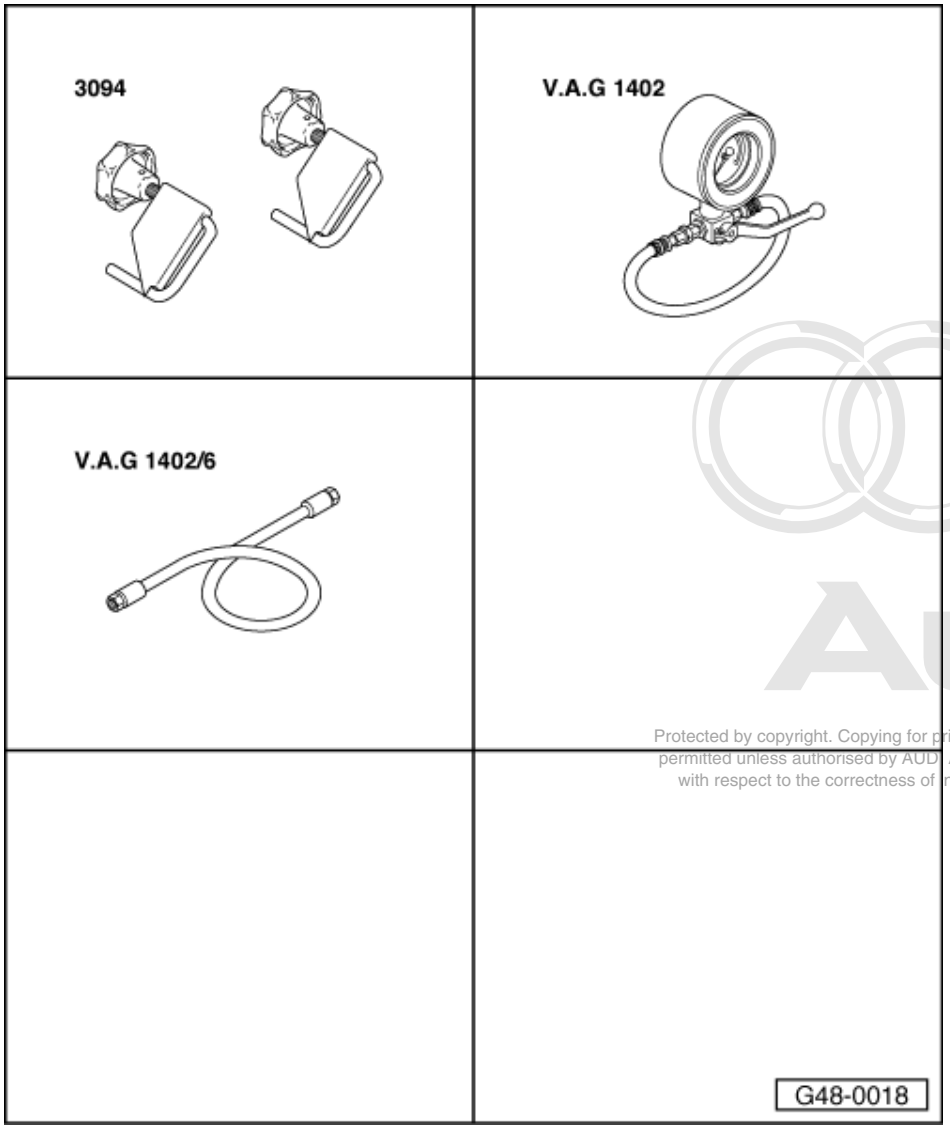

Vehicles with 8-cylinder TDI engine

Special tools and workshop equipment required:

- 3094 Hose clamp
- V.A.G 1402 Tester for power-assisted steering
- V.A.G 1402/6 Adapter set

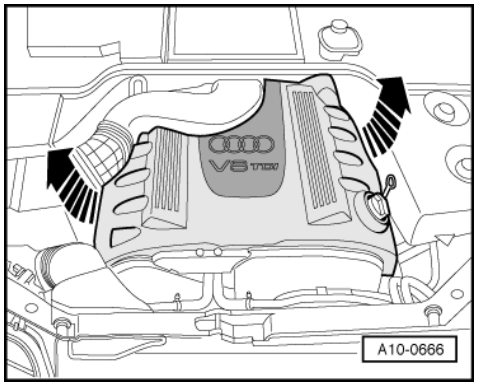

- -> Remove engine cover -arrows-.

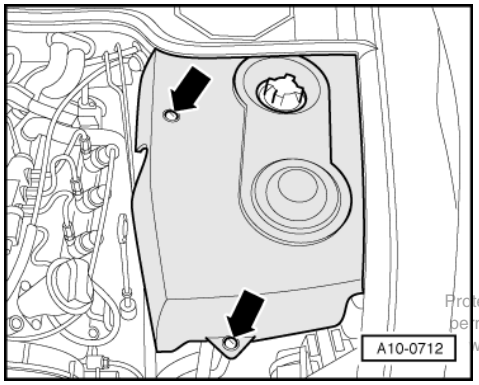

- -> Remove cover on left in engine compartment -arrows-.
- Remove lower engine soundproofing cover.

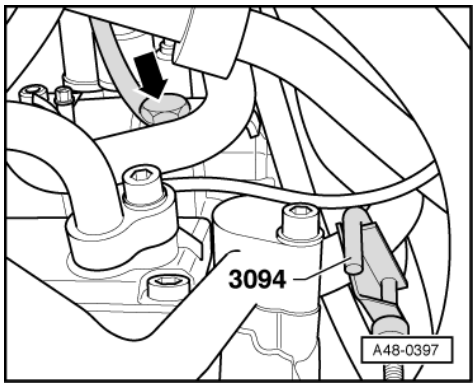

- Pinch off the suction hose using hose clamp 3094.
- -> Remove the hydraulic pressure pipe -arrow- on the vane pump.

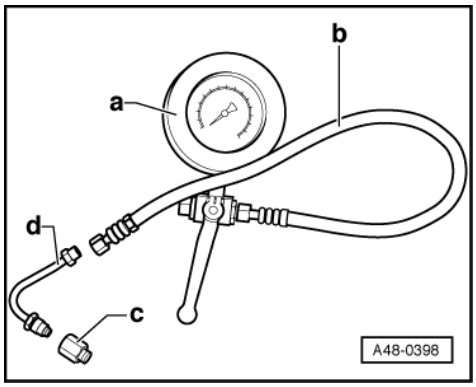

The tool V.A.G 1402/6 comprises the following:

-a- Pressure gauge

-b- Hydraulic hose

-c- Connecting piece

-d- Elbow piece

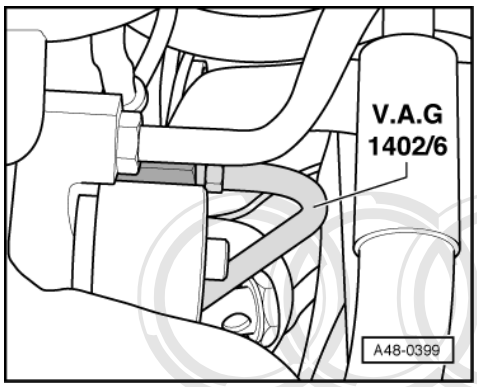

- Connect special tool V.A.G 1402/6 to vane pump.

Notes:

- Special tool V.A.G 1402/6 must be attached to the vane pump from below.
- The illustration shows connection to the engine seen from above.
- A sealing ring must be fitted between the vane pump and the connecting piece of V.A,G 1402/6.

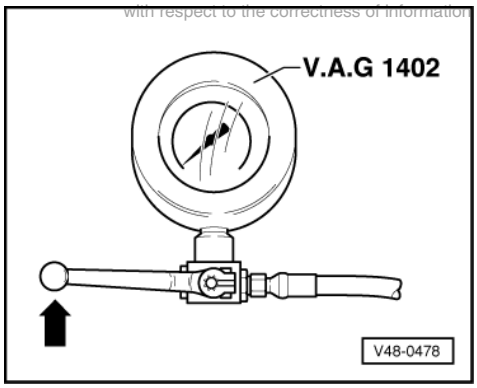

- -> Close pressure gauge shut-off valve (lever set to left).
- Remove hose clamps -3094- and top up fluid in reservoir, if necessary.

Checking pressure:

To avoid damaging the pump, note the following:

- Do not allow the engine to run for more than 10 seconds when carrying out this test.
- Start the engine without pressing the accelerator and let it run at idling speed.
- Read off the pump pressure at idling speed immediately after starting the engine (if necessary, have a second mechanic read off the pressure).
- The pressure will drop during the test; take the highest pressure reading as the test value
  Specified value: 127 - 131 bar pressure at outlet steering hydraulics.

- Switch off engine.

  Replace vane pump if specified value is not attained => Page 378

- Check hydraulic fluid level =>Page 316
- Bleed steering system => Page 317
- Check steering system for leaks =>Page 318

17.3 - Assembly overview of vane pump

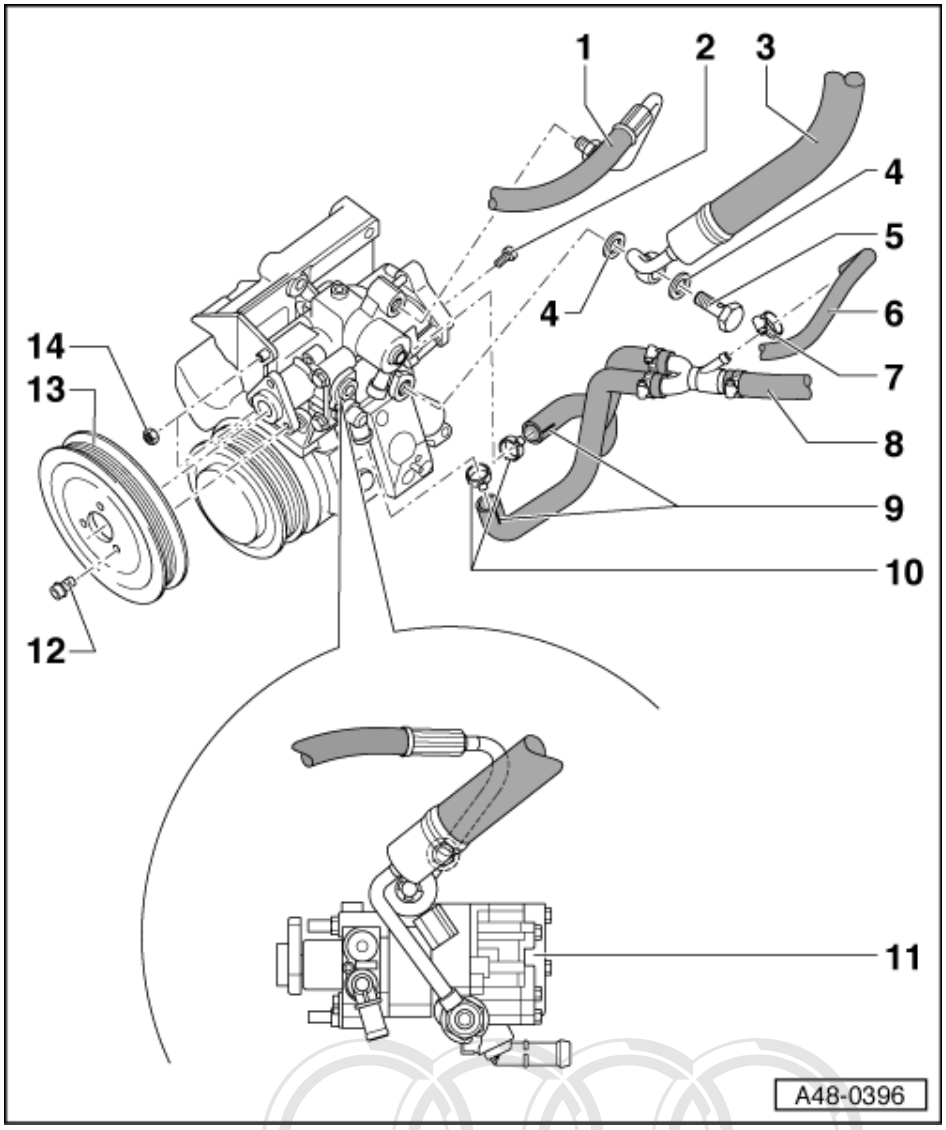

Vehicles with 8-cylinder petrol engine

Notes:

- Replace sealing rings.
- Do not re-use hydraulic fluid which has been drained off.
- Hydraulic fluid: Part no. G 002 000
- On replacing vane pump, always check alignment of belt pulleys of air-conditioner compressor and vane pump.

1 Expansion hose for viscous fan
  - Tightening torque: 47 Nm
2 Hexagon socket-head bolt
  - Tightening torque: 22 Nm
3 Expansion hose for power-assisted steering
  - Connection to vane pump

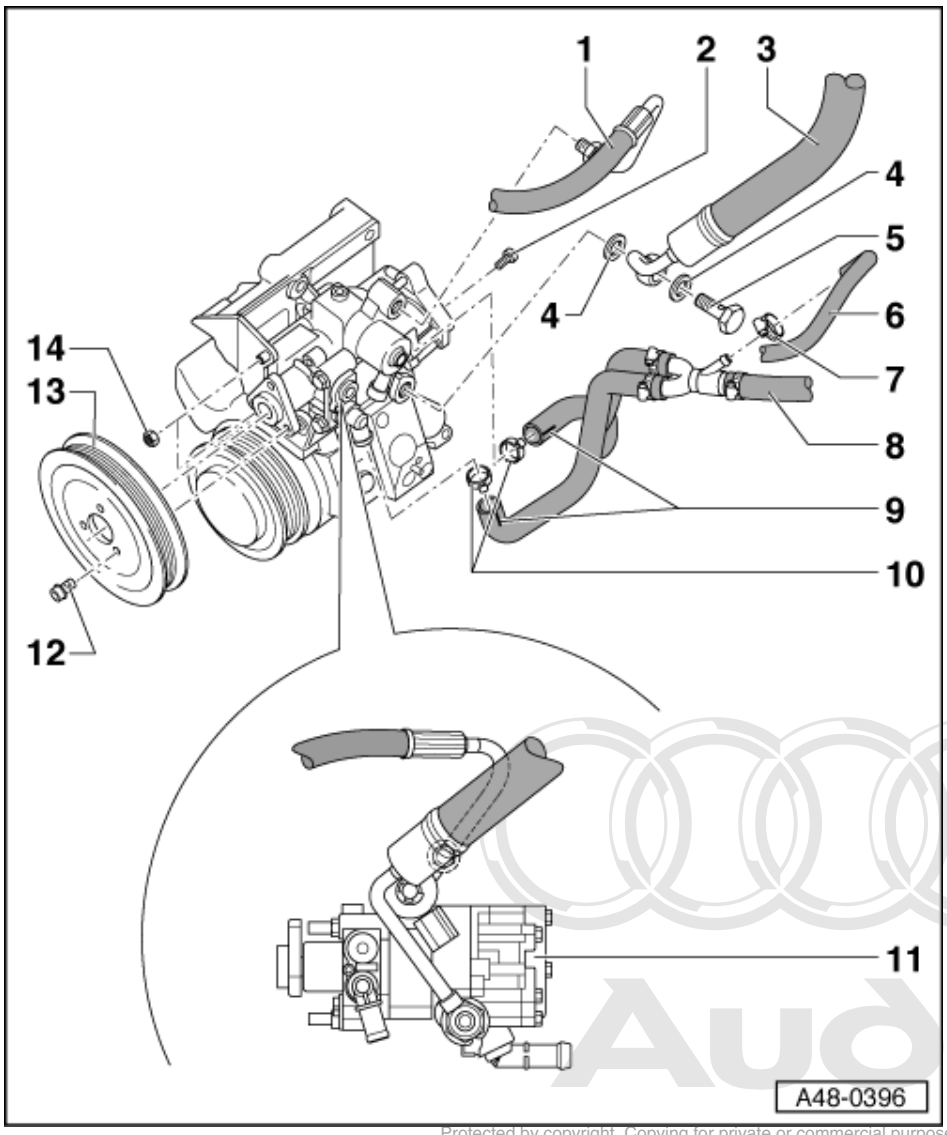

4 Sealing ring
- Always replace

5 Banjo bolt
- Tightening torque: 47 Nm

6 Return hose for viscous fan

7 Hose clamp

8 Suction hose
- Connection to expansion tank

9 Positioning aid
- Must align with marking on pump

10 Eyelet-type hose clamp

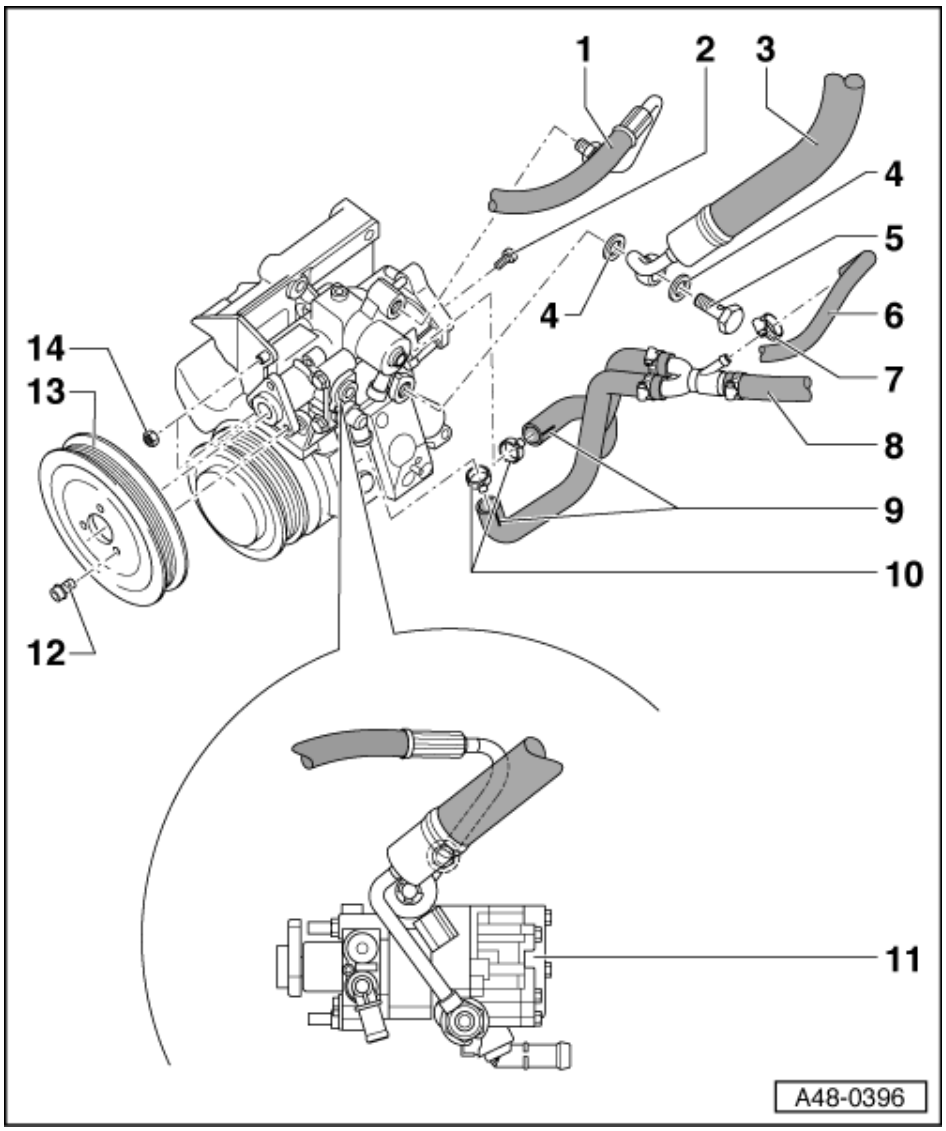

11 Vane pump

- Check delivery pressure
  => Page 386
- Removing and installing
  =>Page 392
- Before installing, fill with hydraulic fluid at suction end and crank by hand until fluid emerges at pump outlet.

12 Combi bolt, 22 Nm

13 Belt pulley

14 Nuts

- Tightening torque: 22 Nm

17.4 - Removing and installing vane pump for power assisted steering and hydraulic cooler

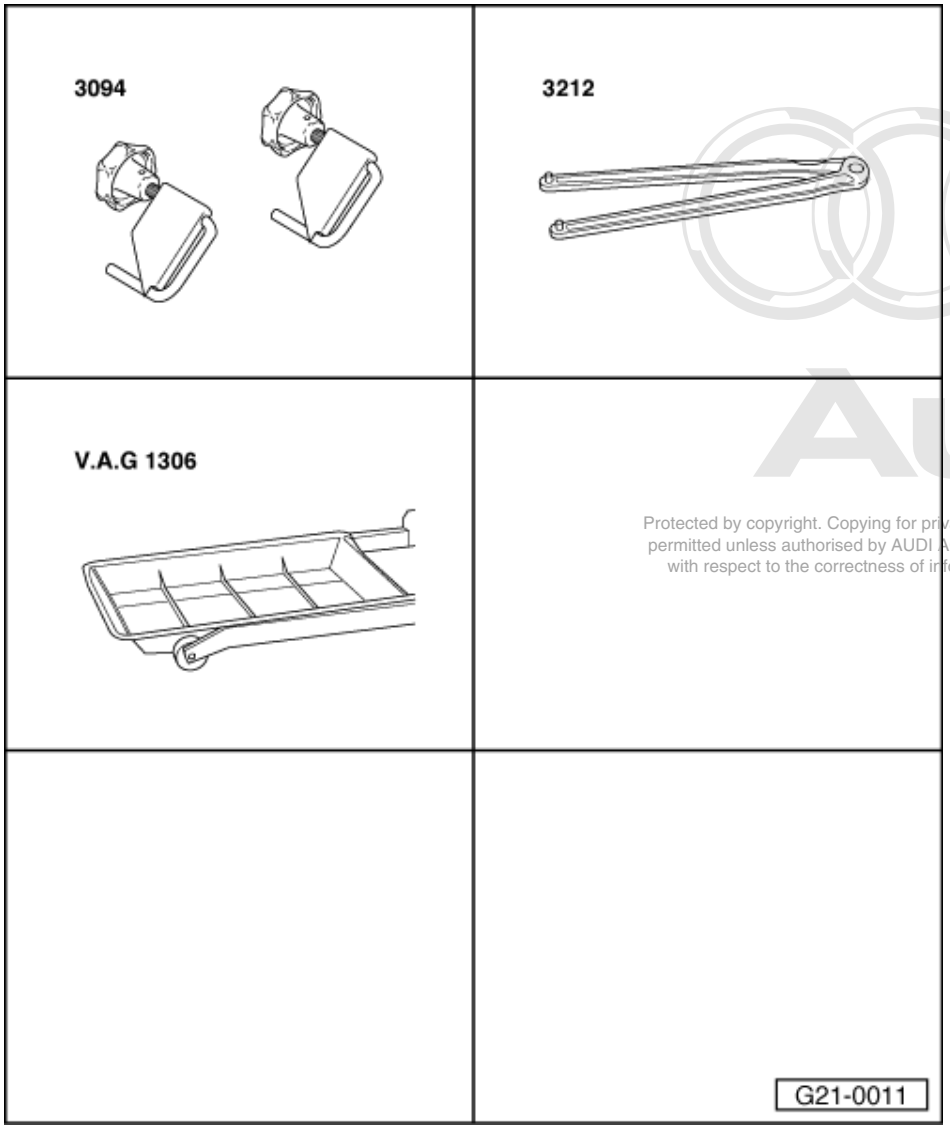

Special tools and workshop equipment required

- Hose clamps 3094
- Pin wrench 3212
- Drip tray V.A.G 1306

Note:
All cable ties which are released or cut open when removing must be fitted in the same position when installing.

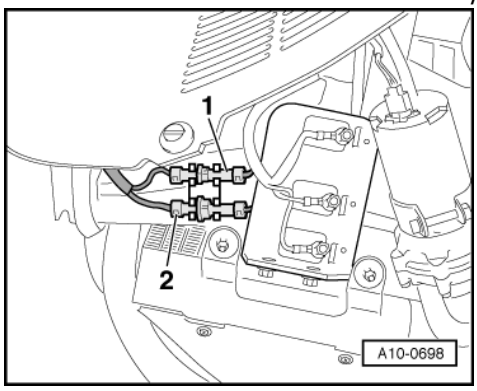

Removing

- Removing ribbed belt.

=> 8-cyl. TDI®-Engine, Mechanical Components; Repair group 13; Dismantling and assembling engine; Removing and installing ribbed belt Dismantling and assembling engine Removing and installing ribbed belt

- -> Unclip and detach green electrical connector -1- for air conditioner magnetic clutch in front of the left wheel housing, move wiring clear.

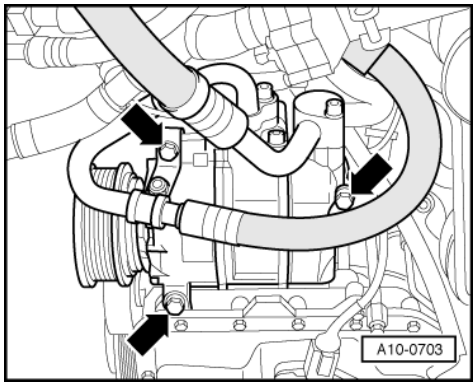

Important
The air conditioner refrigerant circuit must not be opened.

- -> Unscrew air conditioner compressor from bracket -arrows- and secure to one side on the chassis longitudinal member.

- Place drip tray V.A.G 1306 under gearbox.

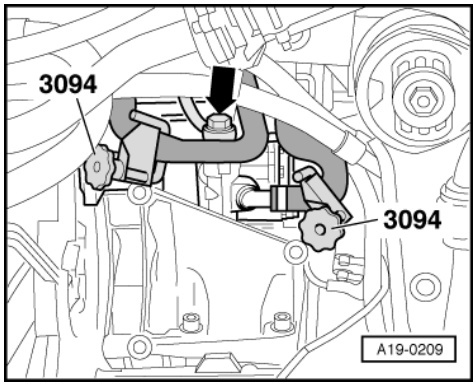

- -> Clamp the two hoses on the vane pump with hose clamps 3094 and disconnect the hoses.
- Unbolt the pressure pipe for power assisted steering -arrow-.

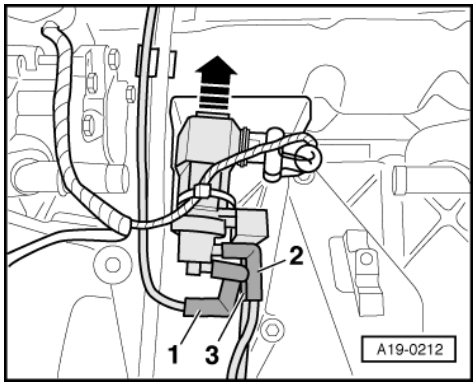

- -> Unplug vacuum hoses -1...3- on the solenoid valves for boost pressure control.
- Disconnect the solenoid valves for charge pressure control from the rubber bracket on the heat shield - arrow-.

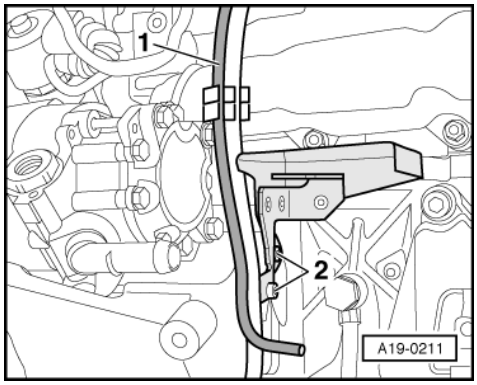

- -> Unscrew the heat shield for the solenoid valve from the bracket for A/C compressor and vane pump -2-.
- Move vacuum hose -1- on dipstick guide tube clear.
- Unscrew rear hexagon socket head bolt for vane pump.

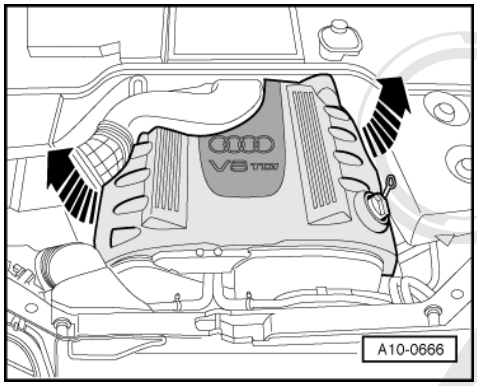

- -> Remove engine cover -arrows-.

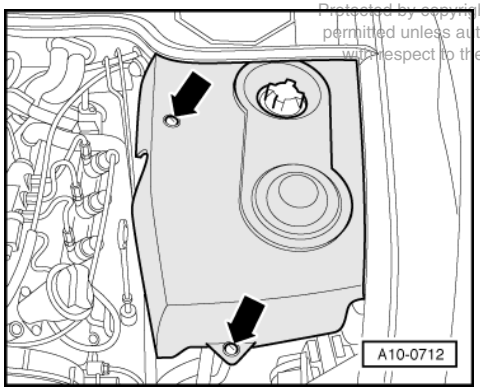

- -> Remove cover on left in engine compartment-arrows-.
- Remove upper left toothed belt guard.

=> 8-cyl. TDI®-Engine, Mechanical Components; Repair group 13; Dismantling and assembling engine; Toothed belt covers Dismantling and assembling engine Toothed belt covers

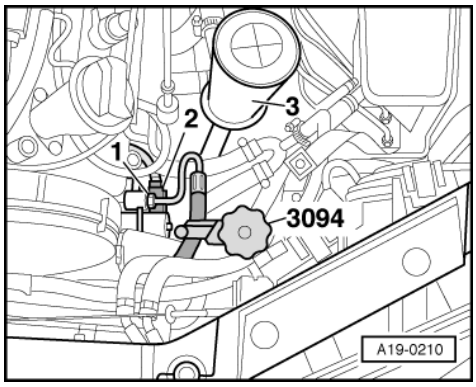

- -> Clamp the pressure pipe to the hydraulic fan with pipe clamp 3094.
- Unbolt pressure pipe -1-.
- Disconnect electrical connector -2- on the vane pump and moving wiring clear.
- Unscrew bracket for pressure control valve for crankcase breather -3- on the body.

Note:

The pressure control valve for crankcase breather remains installed.

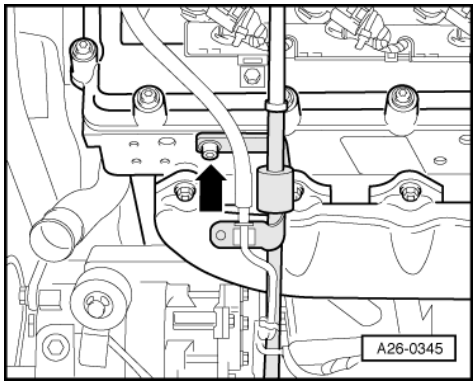

- -> Unbolt dipstick guide tube on cylinder head -arrow- and remove upwards.

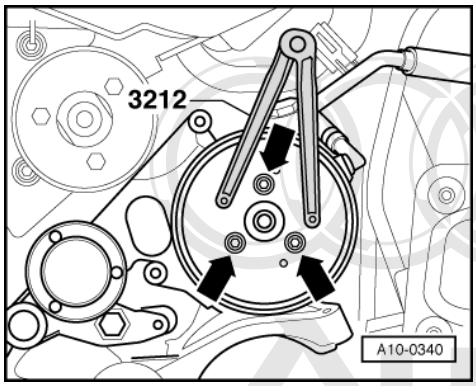

- -> Unscrew the bolts -arrows- of the ribbed belt pulley for the vane pump.

Notes:

- Use pin wrench 3212 as a counterhold when slackening and tightening bolts.
- Installation position: The word "vorne" ("front") on the ribbed belt pulley indicates direction of travel

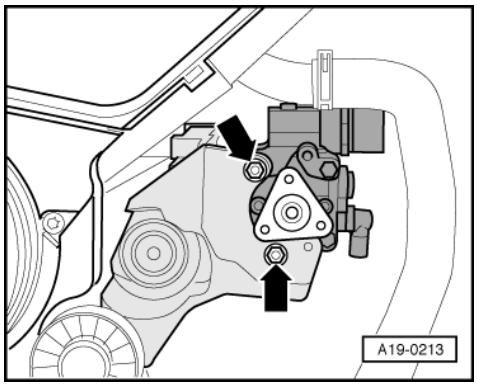

- -> Unscrew the 2 nuts -arrows-.
- Lift out the vane pump.

Installing

Installation is carried out in the reverse order; note the following:

Note:

Replace seals and gaskets.

- Installing air conditioner compressor

=> 8-cyl. TDI®-Engine, Mechanical Components; Repair group 13; Dismantling and assembling engine; Ribbed belt drive for vane pump, alternator and AC compressor Dismantling and assembling engine Ribbed belt drive for vane pump, alternator and AC compressor

- Install ribbed belt

=> 8-cyl. TDI®-Engine, Mechanical Components; Repair group 13; Dismantling and assembling engine; Removing and installing ribbed belt Dismantling and assembling engine Removing and installing ribbed belt

- Inspect alignment of ribbed belt.

=> 8-cyl. TDI®-Engine, Mechanical Components; Repair group 13; Dismantling and assembling engine; Checking alignment of ribbed belt Dismantling and assembling engine Checking alignment of ribbed belt

- Top up power steering fluid and bleed steering system:
- Check hydraulic fluid level =>Page 316
- Bleed steering system => Page 317
- Check steering system for leaks =>Page 318

Tightening torques

Component	Nm
Vane pump to bracket	22
Belt pulley to vane pump	22
Bracket for crankcase breather pressure control valve to body	10
Pressure pipe for hydraulic cooler to vane pump	50
Heat shield on bracket for vane pump	10
Hydraulic pressure pipe for steering gear to vane pump	47
Hose clamps	2

18 - Assembly overview: Power steering/fluid circuit for 12-cylinder petrol engine

18.1 - Assembly overview: Power steering/fluid circuit for 12-cylinder petrol engine

General information

Servicing of vane pump is not envisaged. In the case of complaints, determine the cause by means of a pressure test and leak test. If a fault is detected, replace the vane pump.

Notes:

- Check steering system for leaks if there is a lack of fluid in the reservoir.
- If a leak is found in the area of the pipe connections, first check pipes/pipe connections for leaks, re-tighten if necessary and wipe dry.
- Replacement pumps are not filled with fluid. Prior to installation these must always be filled with hydraulic fluid G 002 000 and cranked by hand to avoid possible noise whilst driving or pump damage.
- Type of fluid: Hydraulic fluid G 002 000

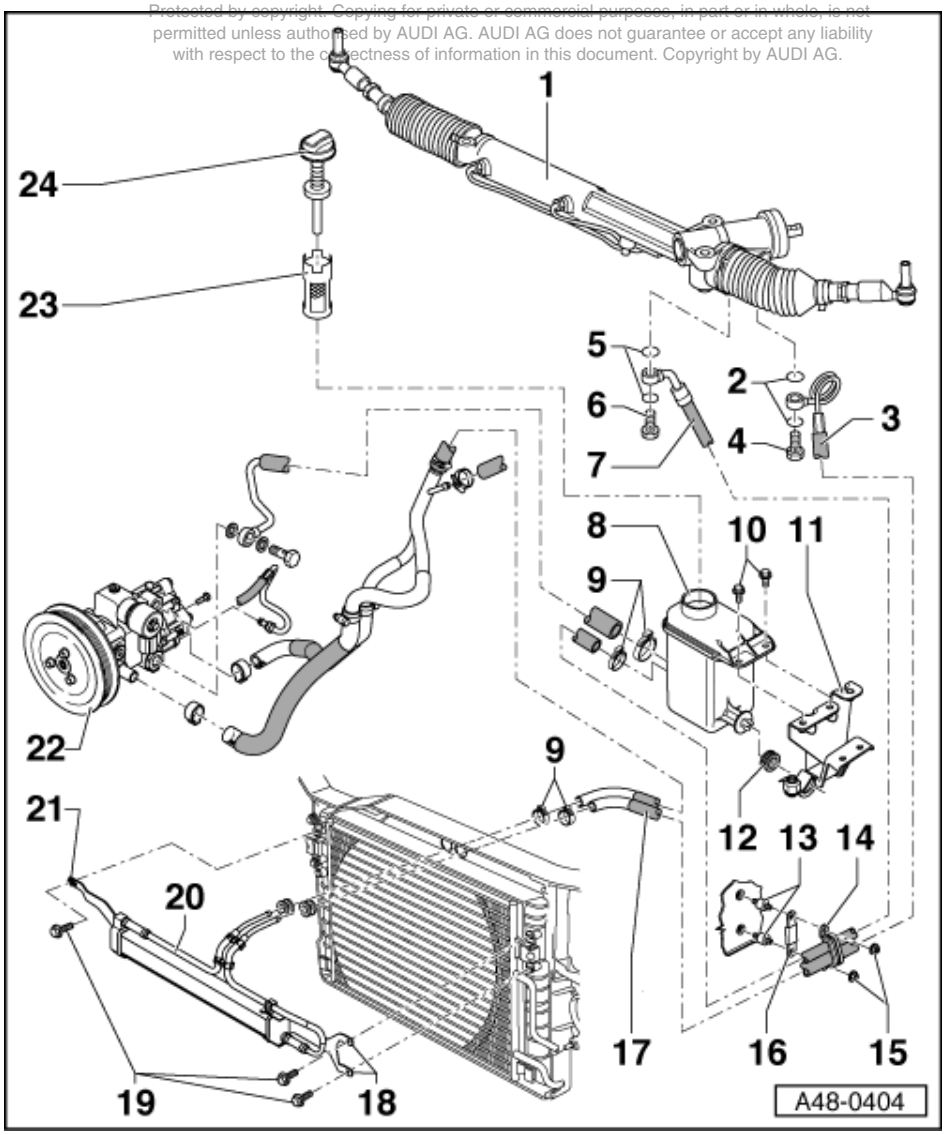

With the exception of the continuation of the hydraulic system pipes from left to right on the steering box and the threaded connection between pressure line/expansion hose on the longitudinal member, the fluid circuit of RHD vehicles corresponds to that of the LHD version.
When fluid circuit has been opened always:
- Check all unions for leaks, start engine and perform visual inspections.
- Check fluid level =>Page 316

1 Power-assisted steering box
- Assembly overview:
- Left-hand drive => Page 249
- Right-hand drive => Page 298
- Servicing => Page 293

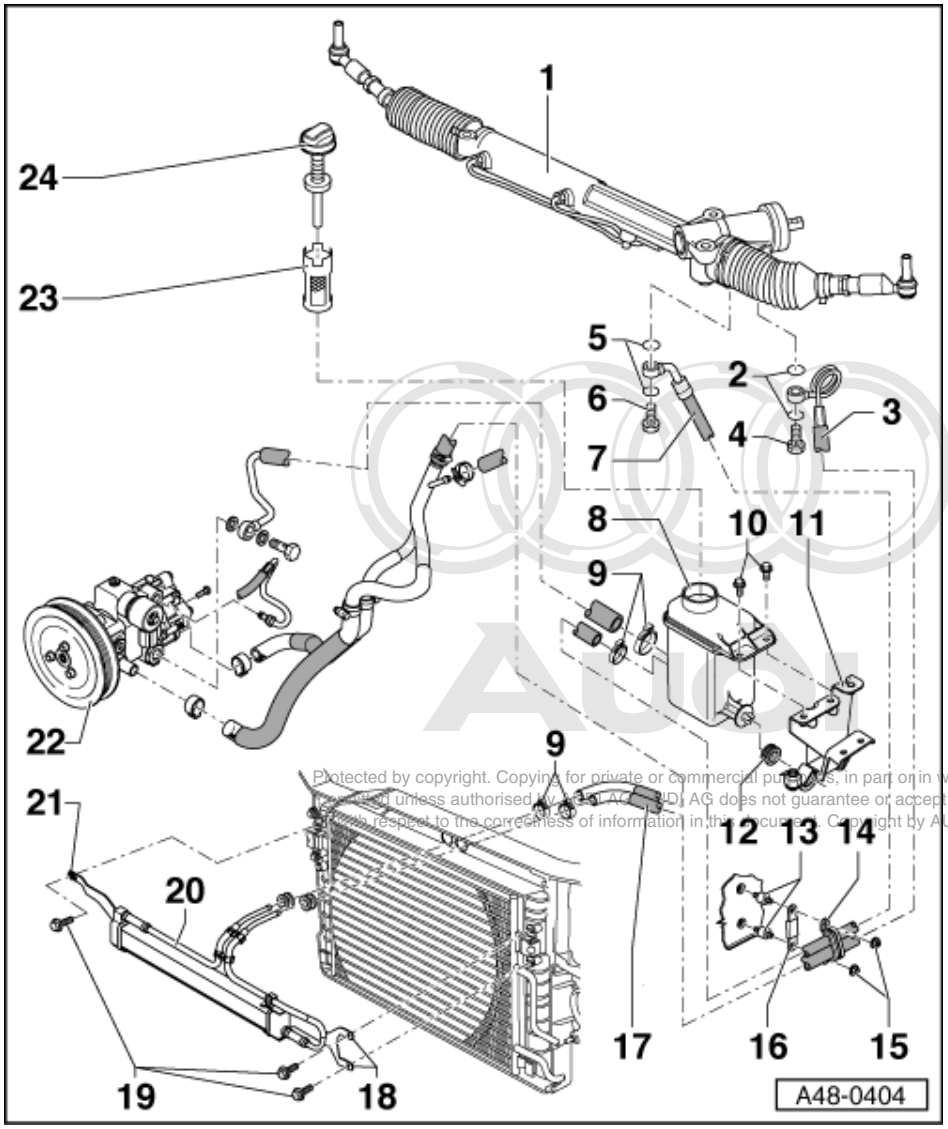

2 Sealing ring
- Always replace

3 Expansion hose
- Leads to steering box

4 Banjo bolt, 40 Nm
- With integrated non-return valve

5 Sealing ring
- Always replace

6 Banjo bolt, 47 Nm

7 Return hose
- Leads to steering box

8 Expansion tank
- Re-fill with hydraulic fluid, Part No. G 002 000
- Plugged into hydraulic unit bracket
- Check fluid level =>Page 316

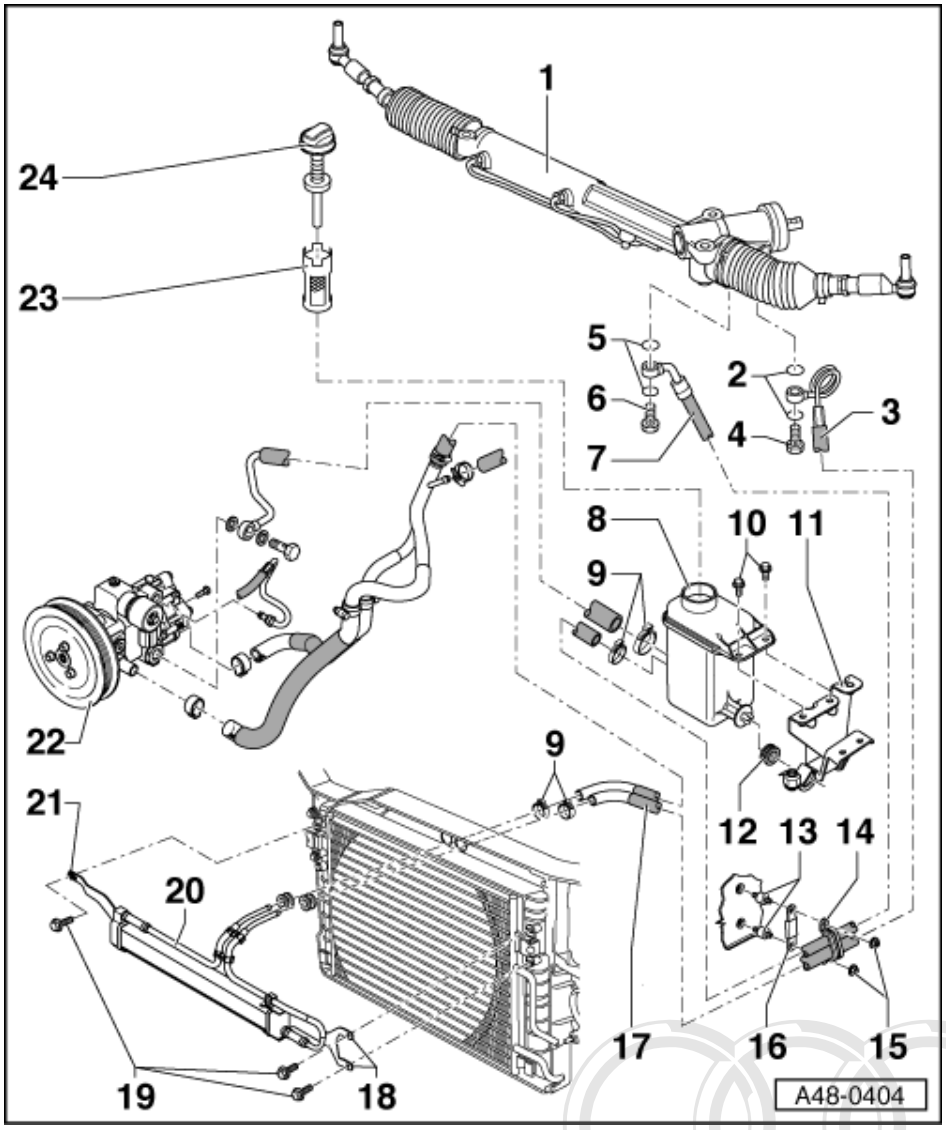

9 Clip
- Always replace
- Tensioning => Page 48-113
- Can also be replaced by screw-type hose clamp

10 Combi bolts, 9 Nm

11 Bracket

12 Rubber grommet

13 Bonded rubber bush

14 Retaining clip

15 Hexagon nut, 5 Nm

16 Retaining plate
- Note correct installation position:

- Solid rubber faces towards hose

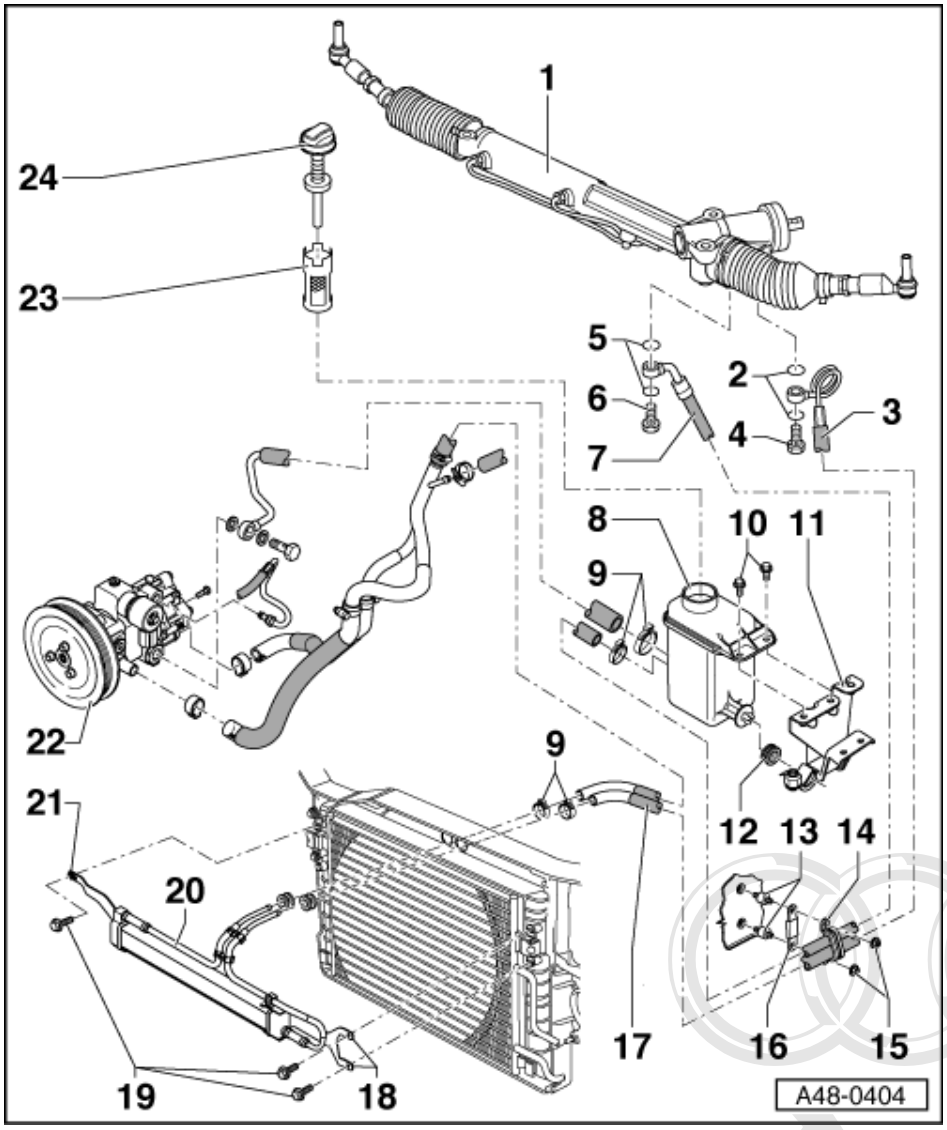

17 Return hose

18 Locating bearing

19 Combi bolt, 5 Nm

- Tightening sequence:
- 1. tighten combi bolt on floating bearing (Item 21) hand-tight (do not tighten fully).
- 2. fully tighten combi bolts on locating bearing (Item 18).
- 3. fully tighten combi bolt on floating bearing (Item 21).

20 Hydraulic fluid cooler

- Two versions with varying routing of lines

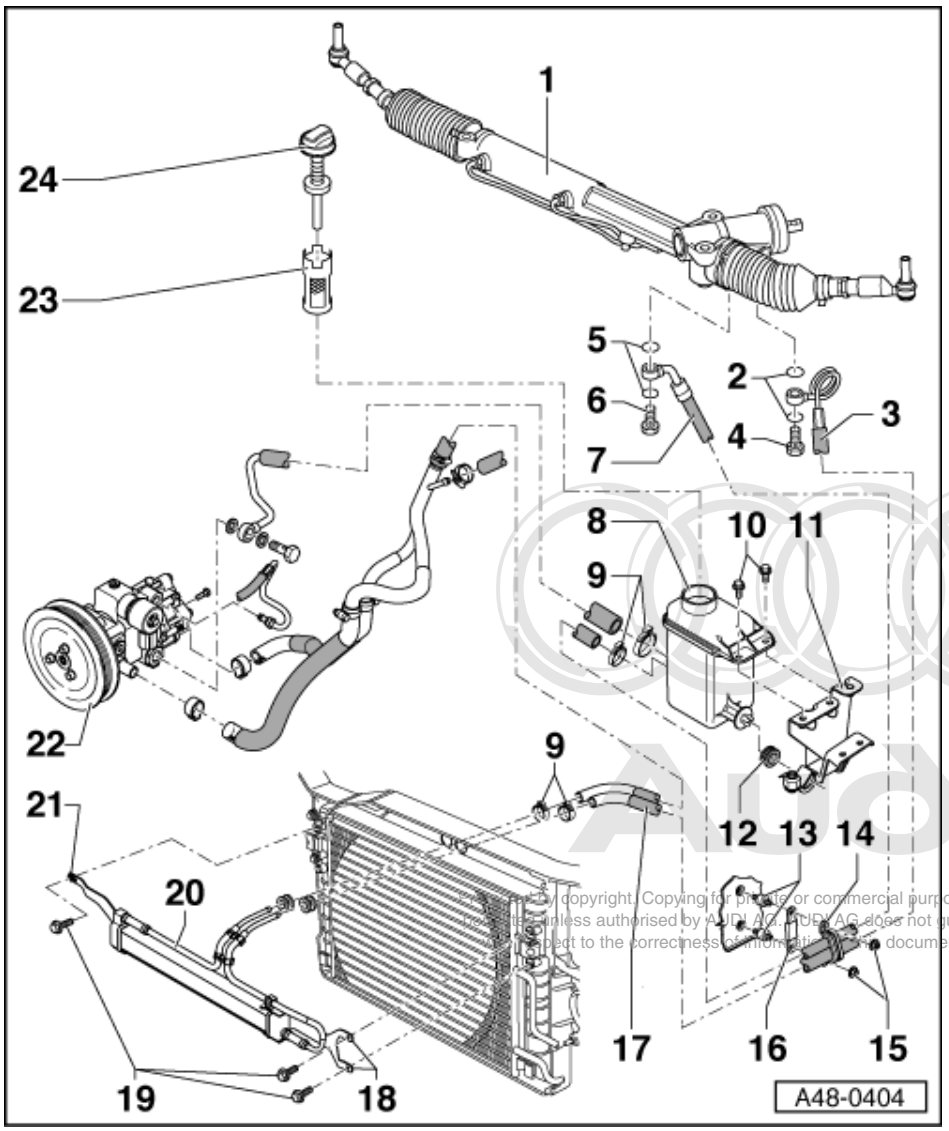

21 Floating bearing

22 Vane pump

- Check delivery pressure => Page 402
- Removing and installing=>Page 406 .
- Connections => Page 404

23 Strainer for expansion tank

- Clean using solvent

24 Cap with dipstick

- Check fluid level =>Page 316

18.2 - Checking supply pressure of vane pump

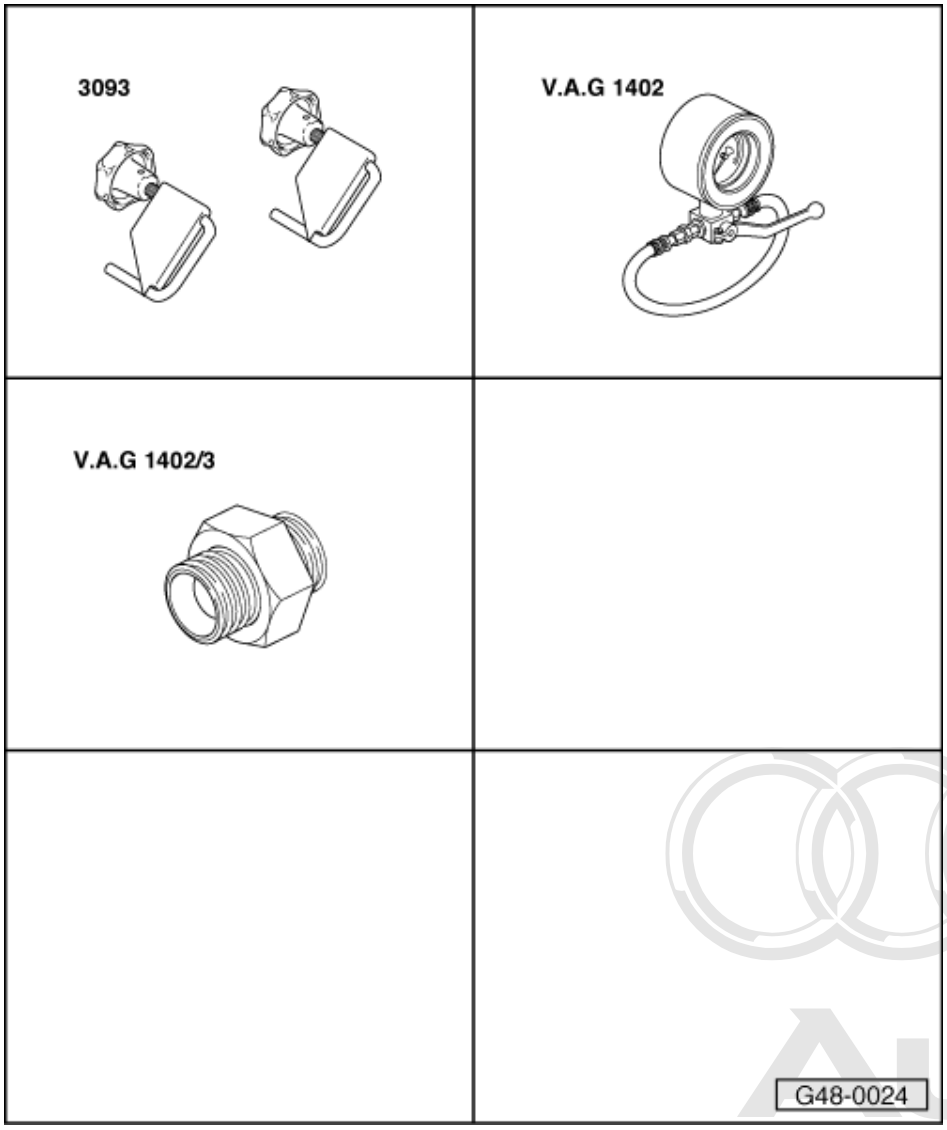

Vehicles with 12-cylinder petrol engine

Special tools and workshop equipment required

- 3094 Hose clamp
- V.A.G 1402 Tester for power-assisted steering
- V.A.G 1402/3 Adapter set

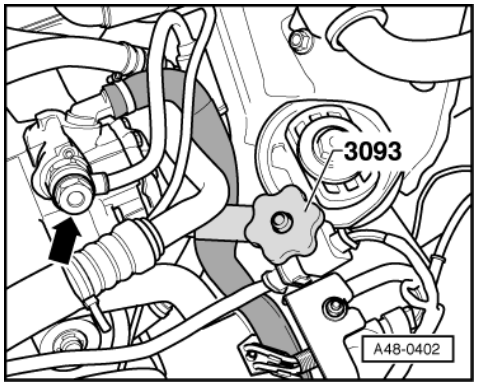

- Remove noise lower insulation.
- Pinch off the suction hose using hose clamp 3093.
- -> Remove the hydraulic pressure pipe -arrow- on the vane pump.

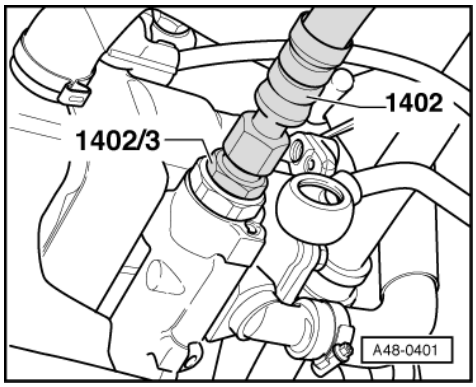

- -> Tighten the adapter 1402/3 with sealing ring to the vane pump.
- Tighten tester for power-assisted steering V.A.G 1402 to adapter V.A.G 1402/3.

Note:

- Special tool V.A.G 1402 must be attached to the vane pump from below.

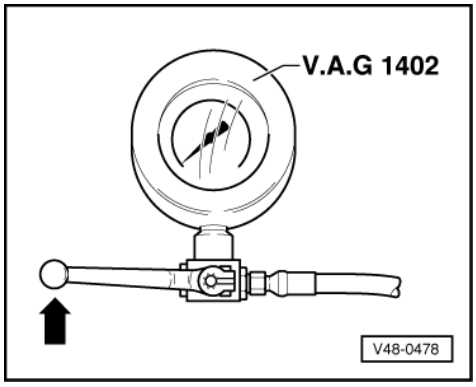

- -> Close pressure gauge shut-off valve (lever set to left).
- Remove hose clamps -3094- and top up fluid in reservoir, if necessary.

Checking pressure:

To avoid damaging the pump, note the following:

- Do not allow the engine to run for more than 10 seconds when carrying out this test.
- Start the engine without pressing the accelerator and let it run at idling speed.
- Read off the pump pressure at idling speed immediately after starting the engine (if necessary, have a second mechanic read off the pressure).
- The pressure will drop during the test; take the highest pressure reading as the test value
  Specified value: 130 bar pressure at outlet steering hydraulics.

- Switch off engine.

  Replace vane pump if specified value is not attained => Page 378

- Check hydraulic fluid level =>Page 316
- Bleed steering system => Page 317
- Check steering system for leaks =>Page 318

18.3 - Assembly overview of vane pump

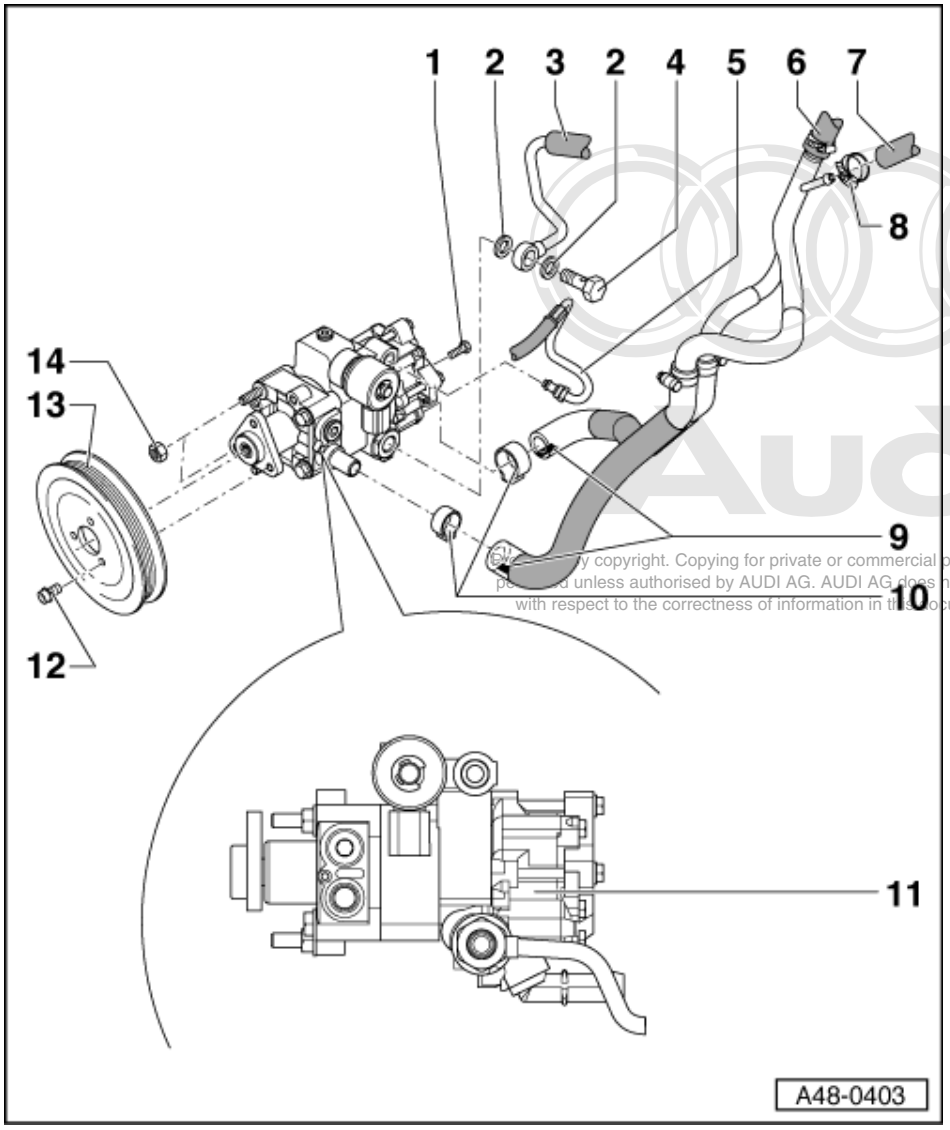

Vehicles with 12-cylinder petrol engine

Notes:

- Replace sealing rings.
- Do not re-use hydraulic fluid which has been drained off.
- Hydraulic fluid: Part no. G 002 000
- On replacing vane pump, always check alignment of belt pulleys of air-conditioner compressor and vane pump.

1 Hexagon socket-head bolt
- Tightening torque: 22 Nm

2 Sealing ring
- Always replace

3 Expansion hose for power-assisted steering
- Connection to vane pump

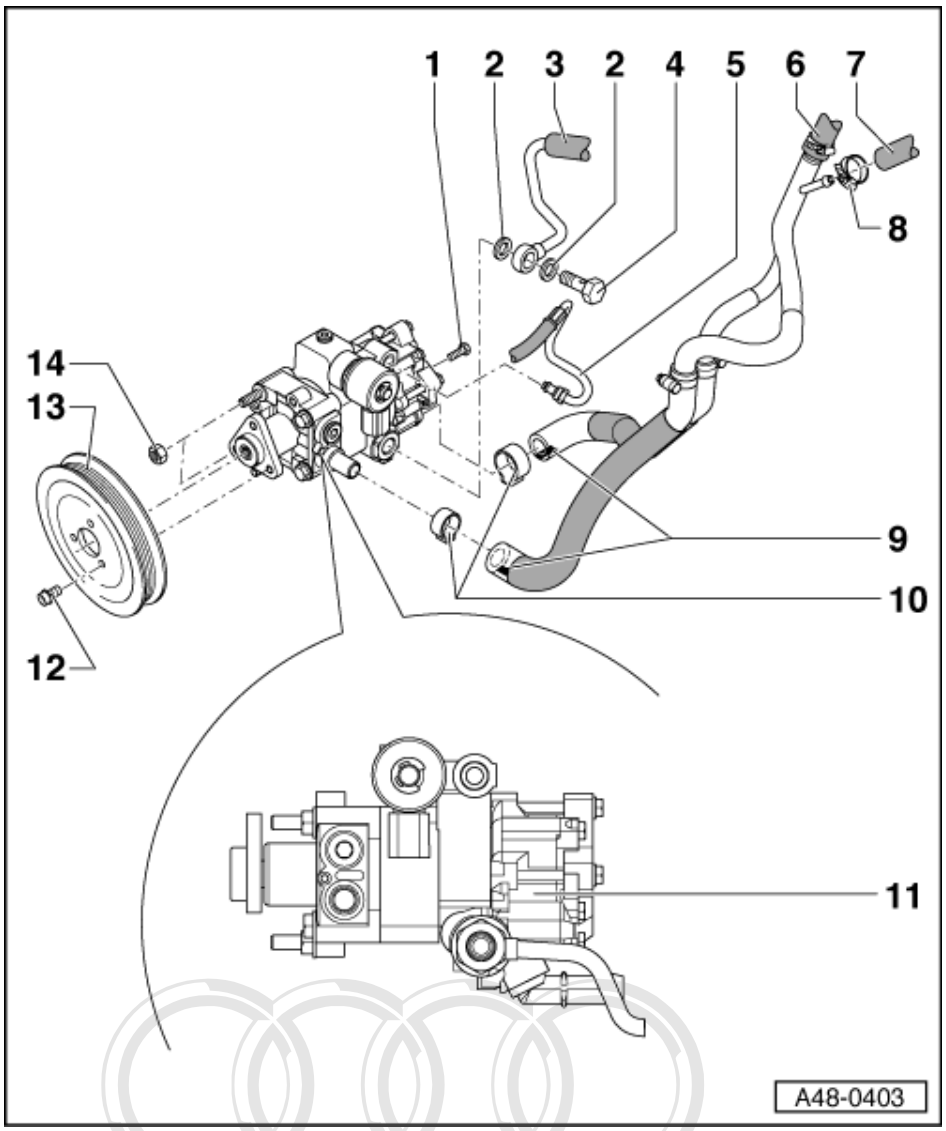

4 Banjo bolt
- Tightening torque: 47 Nm

5 Expansion hose for viscous fan
- Tightening torque: 32 Nm

6 Suction hose
- Connection to expansion tank

7 Return hose for viscous fan

8 Hose clamp

9 Positioning aid
- Marks face downwards

10 Eyelet-type hose clamp
- Positioning for clamp on P

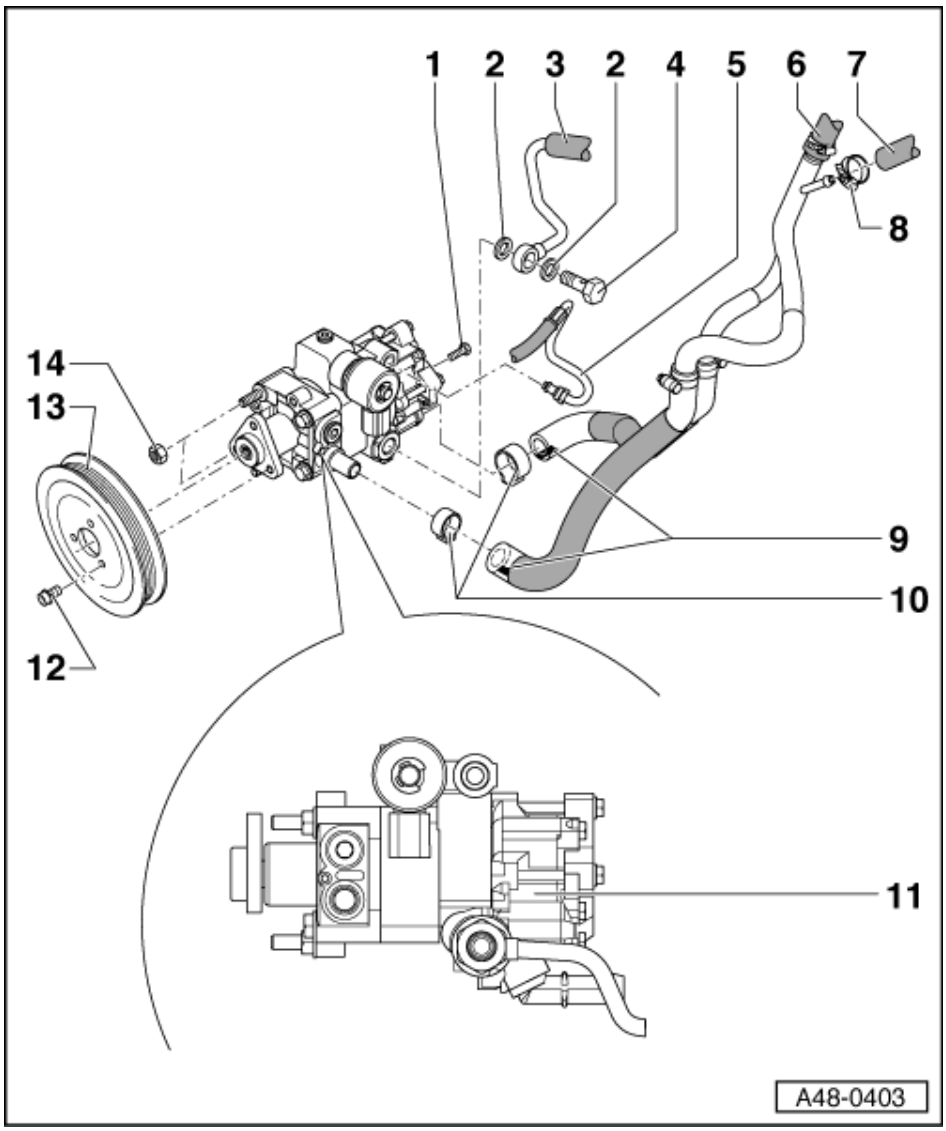

11 Vane pump

- Check delivery pressure
  => Page 402
- Removing and installing
  =>Page 406 .
- Before installing, fill with hydraulic fluid at suction end and crank by hand until fluid emerges at pump outlet.

12 Combi bolt, 22 Nm

13 Belt pulley

14 Nuts

- Tightening torque: 22 Nm

18.4 - Removing and installing vane pump for power assisted steering and hydraulic cooler

Note:

All cable ties which are released or cut open when removing must be fitted in the same position when installing.

Removing

- Drain the refrigerant circuit

=> Air conditioner - with refrigerant R 134a

- Pull the lock carrier forward:

=> 12-cyl. Engine, Mechanical Components; Repair group 13; Dismantling and assembling engine; Pulling lock carrier forward Dismantling and assembling engine Pulling lock carrier forward

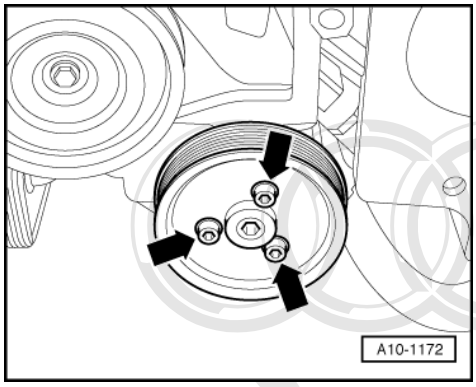

Note:

Loosen bolts of pulley to power steering vane pump with ribbed belt remaining fitted.

- Removing ribbed belt.

=> 12-cylinder Engine, Mechanical Components; Repair Group 13; Dismantling and assembling engine; Removing and installing ribbed belt Dismantling and assembling engine Removing and installing ribbed belt

- -> Detach pulley of power steering vane pump -arrows-.

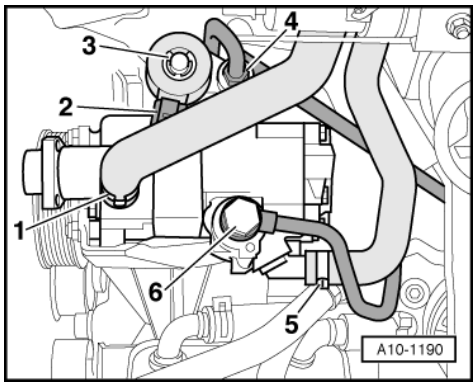

- -> Unplug connector -2- on the radiator fan valve -N313.
- Lay wiring aside.
- Push retaining washer -3- off and remove radiator fan valve -N313.
- Place drip tray underneath to collect fluid.
- Unbolt hydraulic pressure pipes -4- and -6-.
- Detach hoses -1- and -5-.

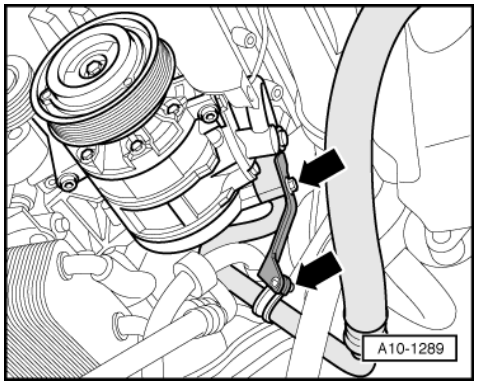

- -> Remove reinforcement for refrigerant line -arrows-.
- Remove refrigerant line from air conditioner compressor.

Note:

The refrigerant line reinforcement is shown in the illustration with vane pump removed.

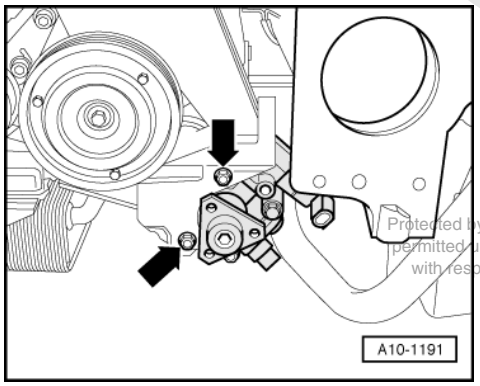

- Unscrew rear hexagon socket head bolt for vane pump.
- -> Unscrew the 2 nuts -arrows-.
- Push vane pump rearwards and remove it from below.

Installing

Installation is carried out in the reverse order; note the following:

Note:

Replace seals and gaskets.

- Install ribbed belt

=> 12-cylinder Engine, Mechanical Components; Repair Group 13; Dismantling and assembling engine; Removing and installing ribbed belt Dismantling and assembling engine Removing and installing ribbed belt

- Inspect alignment of ribbed belt.

=> 12-cylinder Engine, Mechanical Components; Repair Group 13; Dismantling and assembling engine; Checking ribbed belt alignment Dismantling and assembling engine Checking ribbed belt alignment

- Fill the refrigerant circuit:

=> Air conditioner - with refrigerant R 134a

- Top up power steering fluid and bleed steering system:
- Check hydraulic fluid level =>Page 316
- Bleed steering system => Page 317

- Check steering system for leaks =>Page 318

Tightening torques

Component	Nm
Vane pump to bracket	22
Belt pulley to vane pump	22
Refrigerant line with reinforcement to air conditioner compressor	25
Clamp for refrigerant line to reinforcement	8
Hydraulic pressure pipe from hydraulic fan to vane pump	32
Hydraulic pressure pipe from steering gear to vane pump	47