Workshop Manual

Audi A8 2010 ➤

4-cylinder direct injection engine (2.0 ltr. 4-valve TFSI - generation II)

Engine ID	CHJA								

Edition 05.2014

List of Workshop Manual Repair GroupsList of Workshop Manual Repair GroupsList of Workshop Manual Repair Groups

Repair Group

Technical information should always be available to the foremen and mechanics, because their careful and constant adherence to the instructions is essential to ensure vehicle road-worthiness and safety. In addition, the normal basic safety precautions for working on motor vehicles must, as a matter of course, be observed.

D3E80491641

Contents

00 – Technical data

1 Identification

(ARL003837; Edition 05.2014)

⇒ “1.1 Engine identification number/engine data”, page 1

1.1 Engine identification number/engine data

The engine number (“Engine code” and “Serial number”) can be found at the front of the joint between engine and gearbox.

Additionally there is a sticker on the toothed belt cover showing the “engine code” and “serial number”.

The engine code is also indicated on the vehicle data stickers.

Code letters		CHJA	
Capacity	ltr.	1.984	
Power output	kW at rpm	155/4300	
Torque	Nm at rpm	350/1500	
Bore	∅ mm	82.5	
Stroke	mm	92.8	
Compression ratio		9.6	
RON		95 [1)]	
Injection system/ignition system		FSI	
Firing order		1-3-4-2	
Knock control		yes	
Turbocharging/supercharging		yes	
Exhaust gas recirculation		no	
Hybrid drive		yes	
Intake manifold change-over		no	
Variable valve timing		yes	
Secondary air system		no	

- [1)] Unleaded petrol RON 91 can also be used, but results in reduced power

2 Safety precautions

2.1 Safety precautions when working on high-voltage vehicles

2.1.1 Working on high-voltage vehicles

WARNING

Safety hazard: the engine can start unexpectedly.

Before carrying out general work on a vehicle with high-voltage electrical system, switch off the ignition and remove the ignition key from the vehicle.

WARNING

Working on vehicles with high-voltage wiring:

- *Do not support yourself or tools on high-voltage wiring or associated components --> this can damage the insulation.*
- *High-voltage wiring must not be excessively bent or kinked --> this can damage the insulation.*
- *The round high-voltage connectors are colour-coded with an external coloured ring and are provided with mechanical coding or guide lugs. It is important to observe this coding when joining up the round high-voltage connectors, otherwise the connectors can be damaged.*

DANGER!

Risk of fatal injury if high-voltage components are damaged.

Observe the following when working in the vicinity of high-voltage components or wiring:

- *It is not permitted to use cutting or forming tools, other sharp-edged tools or heat sources such as welding, brazing, soldering, hot air or thermal bonding equipment.*
- *Before starting work, visually inspect the high-voltage components in the areas involved.*
- *Before working in the engine compartment, visually inspect the power and control electronics for electric drive - JX1- , electric drive motor - V141- , air conditioner compressor - V470- and high-voltage wiring.*
- *Before working on the vehicle underbody, visually inspect the high-voltage wiring and covers.*
- *Before working on the rear section of the vehicle, visually inspect the high-voltage wiring and the electro-box with the maintenance connector for high-voltage system - TW - .*
- *Visually inspect all potential equalisation lines.*

Check the following when making the visual inspection:

- *There must be no external damage on any component.*
- *The insulation of the high-voltage wiring and potential equalisation lines must not be damaged.*
- *There must be no unusual deformation of the high-voltage wiring.*
- *All high-voltage components must be identified by a red warning sticker.*

De-energising high-voltage system

DANGER!

High voltage can cause fatal injury.

Danger of severe or fatal injuries from electric shock.

- *The high-voltage system may only be de-energised by a suitably qualified person (Audi high-voltage technician).*
- *It must be definitely confirmed that the high-voltage system is de-energised. The system may only be de-energised using the vehicle diagnostic tester via "Guided Fault Finding".*
- *The qualified person (Audi high-voltage technician) confirms that the system is de-energised and uses the locking cap - T40262- to ensure that the system cannot be re-energised. The ignition key and the maintenance connector for high-voltage system - TW - are then stored in a safe place by the qualified person.*
- *The qualified person (Audi high-voltage technician) marks the vehicle by attaching the appropriate warning signs.*

Note

- *De-energising high-voltage system:*
- *Connect vehicle diagnostic tester*
- *Select* `Guided Fault Finding` *mode*
- *Using the* `Go To` *button, select the following menu options in succession:*
- `Selecting function/component`
- `Body`
- `Electrical system`
- `Self-diagnosis compatible systems`
- `8C - Hybrid battery management -J840`
- `8C - Hybrid battery management, functions`
- `51 - De-energise high-voltage system (Rep. gr. 93)`

- The system must first be de-energised by an Audi high-voltage technician before any work is performed on the high-voltage system ⇒ Electrical system, hybrid; Rep. gr. 93 ; De-energising high-voltage system .
- The types of work for which the high-voltage system has to be de-energised are indicated in the instructions for the procedure. For further information, see ⇒ Electrical system, hybrid; Rep. gr. 93 ; General warning instructions for work on the high-voltage system .

Note

- *The high-voltage system must be de-energised before beginning any work on components of hybrid vehicles that are connected to the high-voltage system (e.g. electrically driven air conditioner compressor).*
- *Work on the air conditioning system of hybrid vehicles that does not directly affect the high-voltage system (e.g. performing pressure test on refrigerant circuit, running Guided Fault Finding for air conditioner or control unit for air conditioning compressor - J842- etc.) must only be carried out by "electrically instructed persons" ⇒ Electrical system, hybrid; Rep. gr. 93 ; General warning instructions for work on the high-voltage system and ⇒ Vehicle diagnostic tester in "Guided Fault Finding" mode for air conditioner and battery power regulation .*
- *For certain work on hybrid vehicle components that are installed near high-voltage system components (e.g. battery cooling module, expansion valve to air conditioner etc.), the high-voltage system must be de-energised prior to beginning work ⇒ Electrical system, hybrid; Rep. gr. 93 ; De-energising high-voltage system .*

Re-energising the high-voltage system

DANGER!

High voltage can cause fatal injury.

Danger of severe or fatal injuries from electric shock.

- *The high-voltage system may only be re-energised by a suitably qualified person (Audi high-voltage technician).*
- *The system may only be re-energised using the vehicle diagnostic tester via "Guided Fault Finding".*
- *The vehicle is then made ready for operation again by the qualified person (Audi high-voltage technician).*
- *The qualified person (Audi high-voltage technician) marks the vehicle by attaching the appropriate warning signs.*

Note

- *Re-energising high-voltage system:*
- *Connect vehicle diagnostic tester*
- *Select* `Guided Fault Finding` *mode*
- *Using the* `Go To` *button, select the following menu options in succession:*
- `Selecting function/component`
- `Body`
- `Electrical system`
- `Self-diagnosis compatible systems`
- `8C - Hybrid battery management -J840`
- `8C - Hybrid battery management, functions`
- `51 - Re-energise high-voltage system (Rep. gr. 93)`

Working with ignition switched on or with high-voltage system active

DANGER!

When working on a vehicle with the ignition switched on or while the drive system is active, the engine can start unexpectedly and exhaust fumes can cause a health hazard in closed rooms. Moving parts can trap or draw in parts of the body and/or clothing (safety hazard).

Before switching on the ignition, perform the following steps:

- *Move selector lever to position P*
- *Activate parking brake*
- *Switch off ignition.*
- *Open bonnet*
- *Connect battery charger (e.g. - VAS 5095A-) to jump-start connections of 12 V electrical system.*
- *Switch on ignition*

Working on vehicles with high-voltage system

- If work is necessary near high-voltage system components, perform a visual check of the high-voltage components and wires to check for damage ⇒ page 7 and note ⇒ Electrical system, hybrid; Rep. gr. 93 ; General warning instructions for work on the high-voltage system .
- If work is necessary on high-voltage system components, de-energise high-voltage system ⇒ Electrical system, hybrid; Rep. gr. 93 ; De-energising high-voltage system and note ⇒ Electrical system, hybrid; Rep. gr. 93 ; General warning instructions for work on the high-voltage system .
- To minimise the number of automatic engine starts when the vehicle's drive system is active during test and measurement work, charge vehicle batteries e.g. with the battery charger 60A - VAS 5904- in battery standby mode ⇒ Electrical system; General information; Rep. gr. 27 ; Battery; Charging battery , and ⇒ Electrical system, hybrid; Rep. gr. 93 ; General warning instructions for work on the high-voltage system .
- For test and measurement work that requires the vehicle's drive system to be active or the ignition to be switched on, move the selector lever to position “P”, activate the parking brake and arrange the tools needed so that they cannot come into contact with moving components of the engine and so that they cannot even come near to components that turn when the engine is running.

Note

- *Also move the selector lever to position “P” and activate the parking brake before performing test and measurement work for which the ignition must be switched on but where the vehicle's drive system does not need to be active.*
- *The status of the drive system is shown by the control unit in dash panel insert - J285- via the “power meter” ⇒ Owner's Manual .*
- *Activating and deactivating drive system ⇒ Owner's Manual (note the display on control unit in dash panel insert - J285- when doing this).*

2.1.2 Performing visual check of high-voltage components and wires for damage

WARNING

Safety hazard: the engine can start unexpectedly.

Before carrying out general work on a vehicle with high-voltage electrical system, switch off the ignition and remove the ignition key from the vehicle.

WARNING

Working on vehicles with high-voltage wiring:

- *Do not support yourself or tools on high-voltage wiring or associated components --> this can damage the insulation.*
- *High-voltage wiring must not be excessively bent or kinked --> this can damage the insulation.*
- *The round high-voltage connectors are colour-coded with an external coloured ring and are provided with mechanical coding or guide lugs. It is important to observe this coding when joining up the round high-voltage connectors, otherwise the connectors can be damaged.*

DANGER!

Risk of fatal injury if high-voltage components are damaged.

Observe the following when working in the vicinity of high-voltage components or wiring:

- *It is not permitted to use cutting or forming tools, other sharp-edged tools or heat sources such as welding, brazing, soldering, hot air or thermal bonding equipment.*
- *Before starting work, visually inspect the high-voltage components in the areas involved.*
- *Before working in the engine compartment, visually inspect the power and control electronics for electric drive - JX1- , electric drive motor - V141- , air conditioner compressor - V470- and high-voltage wiring.*
- *Before working on the vehicle underbody, visually inspect the high-voltage wiring and covers.*
- *Before working on the rear section of the vehicle, visually inspect the high-voltage wiring and the electro-box with the maintenance connector for high-voltage system - TW - .*
- *Visually inspect all potential equalisation lines.*

Check the following when making the visual inspection:

- *There must be no external damage on any component.*
- *The insulation of the high-voltage wiring and potential equalisation lines must not be damaged.*
- *There must be no unusual deformation of the high-voltage wiring.*
- *All high-voltage components must be identified by a red warning sticker.*

Procedure: Performing visual check

- When visually checking in the engine compartment area, pay particular attention to the power and control electronics for electric drive, the high-voltage wires for the battery and the air conditioner compressor and the high-voltage wire for the electric drive motor.
- When visually checking the vehicle underside, pay particular attention to the high-voltage wires and the corresponding covers.
- When visually checking the rear of the vehicle, pay particular attention to the drive battery - A2- , the high-voltage wires for the battery and the electronics box with the maintenance connector for high-voltage system.

Check for the following items in the visual inspection:

- There must be no external damage on any high-voltage components.
- The insulation of the high-voltage wiring must be intact and undamaged.
- Check for unusual deformations of the high-voltage wire.
- If you notice anything unusual or if something is unclear, refer to the responsible Audi high-voltage technician or electrically skilled person.

- Detailed information on the high-voltage system can be found in ⇒ Electrical system, hybrid; Rep. gr. 93 ; General warning instructions for work on the high-voltage system .

WARNING

Voltage levels in the high-voltage system of the hybrid vehicle constitute a safety hazard. Danger of electrocution!

- *It is very important to report any faults discovered to the Audi high-voltage technician responsible immediately ⇒ Electrical system, hybrid; Rep. gr. 93 ; General warning instructions for work on the high-voltage system .*

2.2 Safety precautions when working on the fuel supply system

Please note the following warnings when working on the fuel supply system:

WARNING

The fuel system operates at extremely high pressure. This can cause injury.

- *The injection system consists of a high-pressure section (maximum approx. 120 bar) and a low-pressure section (4 ... 7 bar).*
- *The fuel pressure in the high-pressure section must be reduced to a residual pressure of approx. 6 bar prior to opening the system. Procedure ⇒ page 252*

Observe the following to prevent injuries to persons and damage to the injection and ignition system:

- Always switch off the ignition before connecting or disconnecting electrical wiring for the injection or ignition system or tester cables.
- Always switch off ignition before washing engine.
- Erase any entries in event memory resulting from testing or installation ⇒ Vehicle diagnostic tester, `Guided Functions`, `Interrogate event memory`, then `Generate readiness code`.

Caution

To prevent irreparable damage to the electronic components when disconnecting the battery:

- *Observe notes on procedure for disconnecting the battery.*
- *Always switch off the ignition before disconnecting the battery ⇒ Electrical system; Rep. gr. 27 ; Battery; Disconnecting and connecting battery .*

WARNING

Escaping fuel can cause a risk.

- *The power supply for the fuel system pressurisation pump - G6- must be disconnected before opening the fuel system, since -G6- will be activated briefly when the driver's door is opened with the battery still connected.*

– Remove fuse for fuel pump control unit - J538- in fuse holder B - SB- in electronics box in engine compartment; for identification of fuses refer to ⇒ Current flow diagrams, Electrical fault finding and Fitting locations.

2.3 Safety precautions when working on vehicles with start/stop system

When performing repairs on vehicles with start/stop system, note the following:

WARNING

Risk of injury due to automatic engine start on vehicles with start/stop system.

- *On vehicles with activated start/stop system (this is indicated by a message in the instrument cluster display), the engine may start automatically on demand.*
- *Therefore it is important to ensure that the start/stop system is deactivated when performing repairs (switch off ignition, if required switch on ignition again).*

2.4 Safety precautions when working on the subframe

Please note the following warnings when working on the subframe:

Caution

Risk of damage to running gear components.

- *The vehicle must NOT be lowered onto its wheels if the engine/gearbox mountings, steering rack or subframe cross brace are not properly installed.*
- *The vehicle must NOT be supported by applying a trolley jack or similar to the subframe or subframe cross brace.*

2.5 Safety precautions when using testers and measuring instruments during a road test

Note the following if testers and measuring instruments have to be used during a road test:

WARNING

Accidents can be caused if the driver is distracted by test equipment while road-testing, or if test equipment is not properly secured.

Persons sitting in the front passenger's seat could be injured if the airbag is triggered in an accident.

- *The use of test equipment while driving causes distraction.*
- *There is an increased risk of injury if test equipment is not secured.*

◆ *Test equipment must always be secured on the rear seat with a strap and operated from the rear seat by a second person.*

2.6 Safety precautions when working on the ignition system

To prevent injuries to persons and/or irreparable damage to the fuel injection and ignition system, the following must be noted:

- ◆ Persons wearing a cardiac pacemaker must at all times maintain a safe distance from high-voltage components such as the ignition system and xenon headlights.
- ◆ Do not open any fuel line connections while the engine is running.
- ◆ Always switch off the ignition before connecting or disconnecting electrical wiring for the injection or ignition system or tester cables.
- ◆ Erase any entries in event memory resulting from testing or installation ⇒ Vehicle diagnostic tester, `Guided Functions`, `Interrogate event memory`, then `Generate readiness code`.
- ◆ Always switch off the ignition before cleaning the engine.
- ◆ Always switch off the ignition before connecting or disconnecting the battery, otherwise the engine control unit may be damaged.
- ◆ If you want to turn the engine at cranking speed without actually starting it (e.g. compression test), first unplug the four connectors from the ignition coils. Also remove fuse for fuel pump control unit - J538- .

Caution

To prevent irreparable damage to the electronic components when disconnecting the battery:

- *Observe notes on procedure for disconnecting the battery.*
- *Always switch off the ignition before disconnecting the battery ⇒ Electrical system; Rep. gr. 27 ; Battery; Disconnecting and connecting battery .*

2.7 Safety precautions when working on the cooling system

When working on the cooling system note the following warnings:

WARNING

Hot steam/hot coolant can escape - risk of scalding.

- *The cooling system is under pressure when the engine is hot.*
- *To allow pressure to dissipate, cover filler cap on coolant expansion tank with cloth and open carefully.*

Caution

Overheating can occur if the filler cap is not fitted properly.

- *The filler cap must engage positively and audibly when it is closed.*

3 Repair instructions

3.1 Rules for cleanliness

Even small amounts of dirt can cause malfunctions. For this reason, please observe the following rules when working on the fuel supply system, injection system and turbocharger:

- Carefully clean connection points and the surrounding area with engine cleaner or brake cleaner and dry thoroughly before opening.
- Immediately seal open lines and connections with clean plugs, for example from engine bung set - VAS 6122- .
- Place parts that have been removed on a clean surface and cover them over. Use only lint-free cloths.
- Carefully cover or seal open components if repairs cannot be carried out immediately.
- Only install clean components; replacement parts should only be unpacked immediately prior to installation. Do not use parts that have not been stored in their packing (e.g. in tool boxes etc.).
- When the system is open, do not work with compressed air and do not move the vehicle.
- Make sure that no fuel runs onto the fuel hoses. Should this occur, the fuel hoses must be cleaned again immediately.
- Protect unplugged electrical connectors against dirt and moisture and make sure connections are dry when attaching.

3.2 Foreign particles in engine

- When performing assembly work on the engine, all open passages in the intake and exhaust systems must be sealed with suitable plugs (e.g. from engine bung set - VAS 6122-) to prevent foreign particles from entering the engine.

Note

If the turbocharger has suffered mechanical damage
⇒ page 233

3.3 Contact corrosion

Contact corrosion can occur if unsuitable fasteners are used (e.g. bolts, nuts, washers, etc.).

For this reason, only fasteners with a special surface coating are used.

Additionally, all rubber and plastic parts and all adhesives are made of non-conductive materials.

Always install new parts if you are not sure whether used parts can be re-fitted ⇒ Electronic parts catalogue .

Note the following:

- We recommend using only genuine replacement parts; these have been tested and are compatible with aluminium.
- We recommend the use of Audi accessories.
- Damage caused by contact corrosion is not covered under warranty.

3.4 Routing and attachment of pipes, hoses and wiring

- Mark fuel lines, vacuum lines, pipes/hoses for activated charcoal filter system and electrical wiring etc. before removal so they can be re-installed in the original positions and correctly connected. Make sketches or take photographs if necessary.
- To prevent damaging pipes, hoses and wiring, ensure sufficient clearance from all moving or hot components in engine compartment (little space in engine compartment).

3.5 Installing radiators and condensers

Even when the radiator, condenser and charge air cooler are correctly installed, slight impressions may be visible on the fins of these components. This does not mean that the components are damaged. If the fins are only very slightly distorted, this does not justify renewal of the radiator, condenser or charge air cooler.

10 – Removing and installing engine

1 Removing and installing engine

⇒ "1.1 Removing engine", page 15

⇒ "1.2 Securing engine to engine and gearbox support", page 32

⇒ "1.3 Installing engine", page 34

1.1 Removing engine

Note

For all work on vehicles with high-voltage system, note additional warnings for working on such vehicles ⇒ page 2 and ⇒ Electrical system, hybrid; Rep. gr. 93 ; General warning instructions for work on the high-voltage system .

WARNING

Safety hazard: the engine can start unexpectedly.

Before carrying out general work on a vehicle with high-voltage electrical system, switch off the ignition and remove the ignition key from the vehicle.

WARNING

Working on vehicles with high-voltage wiring:

- *Do not support yourself or tools on high-voltage wiring or associated components --> this can damage the insulation.*
- *High-voltage wiring must not be excessively bent or kinked --> this can damage the insulation.*
- *The round high-voltage connectors are colour-coded with an external coloured ring and are provided with mechanical coding or guide lugs. It is important to observe this coding when joining up the round high-voltage connectors, otherwise the connectors can be damaged.*

DANGER!

Risk of fatal injury if high-voltage components are damaged.

Observe the following when working in the vicinity of high-voltage components or wiring:

- *It is not permitted to use cutting or forming tools, other sharp-edged tools or heat sources such as welding, brazing, soldering, hot air or thermal bonding equipment.*
- *Before starting work, visually inspect the high-voltage components in the areas involved.*
- *Before working in the engine compartment, visually inspect the power and control electronics for electric drive - JX1- , electric drive motor - V141- , air conditioner compressor - V470- and high-voltage wiring.*
- *Before working on the vehicle underbody, visually inspect the high-voltage wiring and covers.*
- *Before working on the rear section of the vehicle, visually inspect the high-voltage wiring and the electro-box with the maintenance connector for high-voltage system - TW - .*
- *Visually inspect all potential equalisation lines.*

Check the following when making the visual inspection:

- *There must be no external damage on any component.*
- *The insulation of the high-voltage wiring and potential equalisation lines must not be damaged.*
- *There must be no unusual deformation of the high-voltage wiring.*
- *All high-voltage components must be identified by a red warning sticker.*

Special tools and workshop equipment required

- Support bracket - 10 - 222 A-
- Lifting tackle - 2024 A-
- Gearbox support - 3147-
- Workshop hoist - VAS 6100-
- Engine bung set - VAS 6122-
- Drip tray for workshop hoist - VAS 6208-

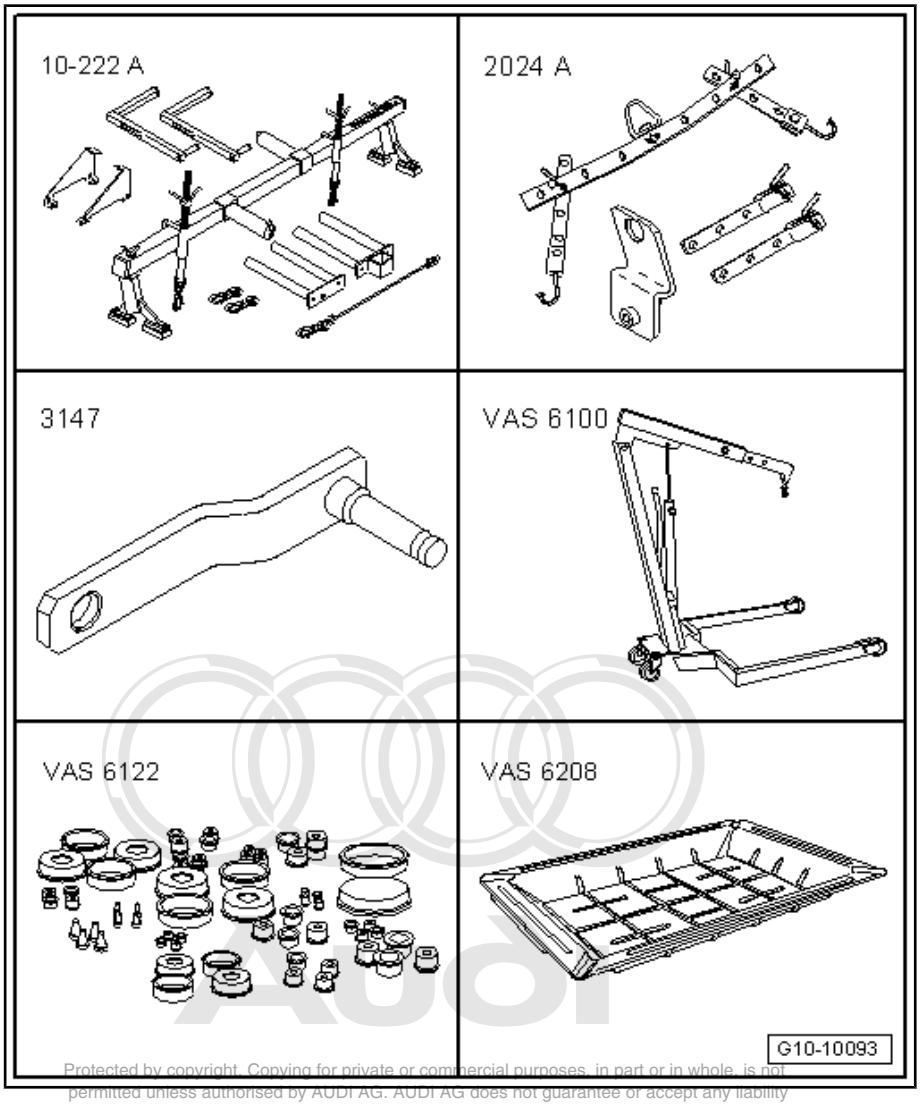

- Hose clip pliers - VAS 6362-

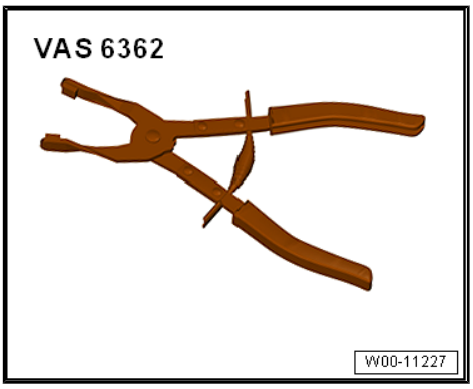

Procedure

Note

- *The engine is removed upwards without gearbox.*
- *Collect drained coolant in a clean container for re-use or disposal.*
- *Fit cable ties in the original positions when installing.*

– Disconnect earth wire from battery terminal ⇒ Electrical system; Rep. gr. 27 ; Battery; Disconnecting and connecting battery .

DANGER!

High voltage can cause fatal injury.

Danger of severe or fatal injuries from electric shock.

- *The high-voltage system may only be de-energised by a suitably qualified person (Audi high-voltage technician).*
- *It must be definitely confirmed that the high-voltage system is de-energised. The system may only be de-energised using the vehicle diagnostic tester via "Guided Fault Finding".*
- *The qualified person (Audi high-voltage technician) confirms that the system is de-energised and uses the locking cap - T40262- to ensure that the system cannot be re-energised. The ignition key and the maintenance connector for high-voltage system - TW - are then stored in a safe place by the qualified person.*
- *The qualified person (Audi high-voltage technician) marks the vehicle by attaching the appropriate warning signs.*

Note

- *De-energising high-voltage system:*
- *Connect vehicle diagnostic tester*
- *Select* `Guided Fault Finding` *mode*
- *Using the* `Go To` *button, select the following menu options in succession:*
- `Selecting function/component`
- `Body`
- `Electrical system`
- `Self-diagnosis compatible systems`
- `8C - Hybrid battery management - J840`
- `8C - Hybrid battery management, functions`
- `51 - De-energise high-voltage system (Rep. gr. 93)`

– Remove engine cover panel -arrows-.

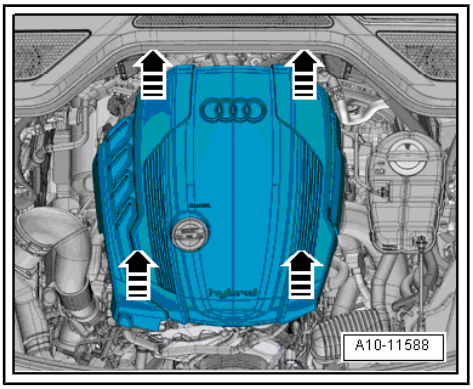

WARNING

Hot steam/hot coolant can escape - risk of scalding.

- *The cooling system is under pressure when the engine is hot.*
- *To allow pressure to dissipate, cover filler cap on coolant expansion tank with cloth and open carefully.*

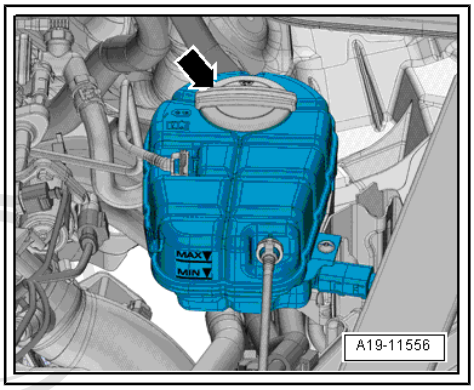

– Open filler cap -arrow- on coolant expansion tank.

– Remove lock carrier cover ⇒ General body repairs, exterior; Rep. gr. 63 ; Bumper (front); Removing and installing attachments .

– Remove front section of front wheel housing liners (both sides) ⇒ General body repairs, exterior; Rep. gr. 66 ; Wheel housing liner; Removing and installing wheel housing liner (front) .

– Remove noise insulation panels ⇒ General body repairs, exterior; Rep. gr. 66 ; Noise insulation; Removing and installing noise insulation .

– Remove closure plate for bumper cover (front) ⇒ General body repairs, exterior; Rep. gr. 63 ; Bumper (front); Removing and installing attachments .

– Unplug electrical connectors and move wiring clear:

1 - Gearbox mounting valve 1 - N262-

2 - Gearbox mounting valve 2 - N263-

– Remove subframe cross brace ⇒ Running gear, axles, steering; Rep. gr. 40 ; Subframe; Removing and installing subframe cross brace .

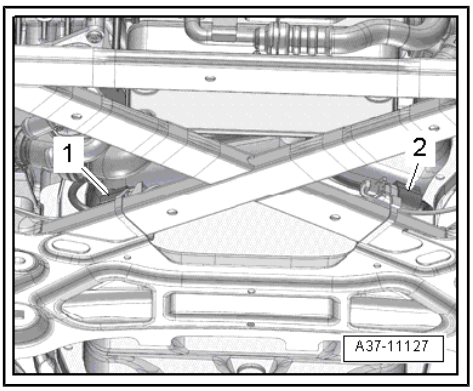

Caution

Risk of damage to running gear components.

- *The vehicle must NOT be lowered onto its wheels if the engine/gearbox mountings, steering rack or subframe cross brace are not properly installed.*

Note

Collect drained coolant in a clean container for re-use or disposal.

– Place drip tray for workshop hoist - VAS 6208- beneath engine.
– Detach connection from radiator (lift retaining clip -arrow-).
– Drain off coolant.

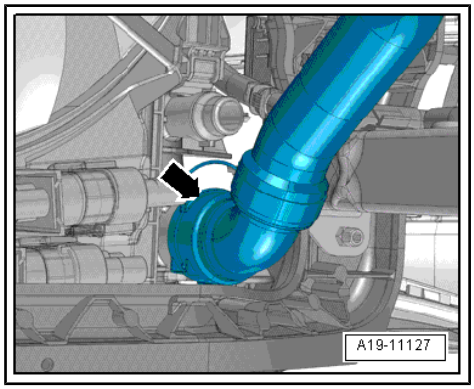

– Release hose clip -arrow- and detach coolant hose.
– Drain off coolant.

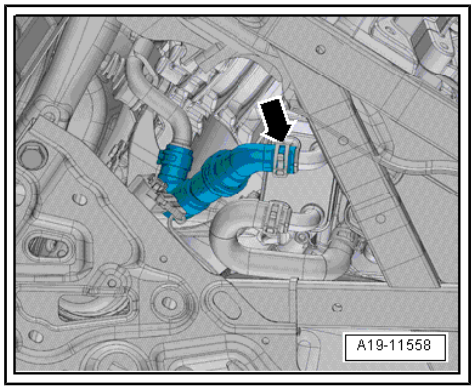

– Release hose clips -1, 2- and detach air hose.
– Remove tunnel cross-piece ⇒ General body repairs, exterior; Rep. gr. 66 ; Underbody trim; Removing and installing tunnel cross-piece .

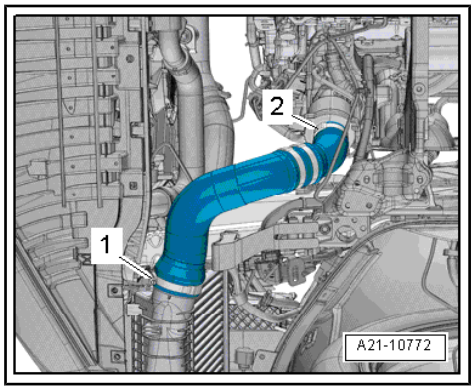

– Remove nuts -1, 2, 3- for front silencer.

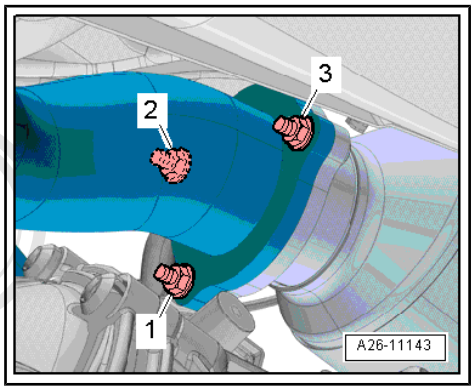

Caution

Risk of damage to flexible joints in front silencer.

- *Do NOT bend the flexible joints in the front silencer more than 10°.*

– Release clamps -1 and 2- and push to rear.

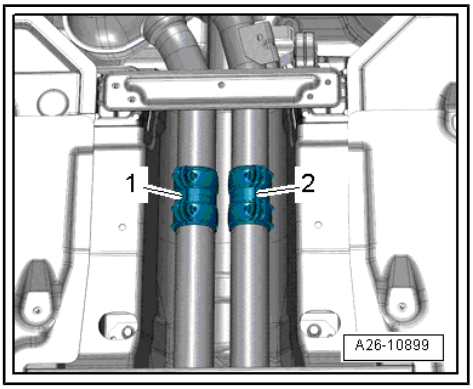

– Remove bolts -arrows- and detach front silencers.

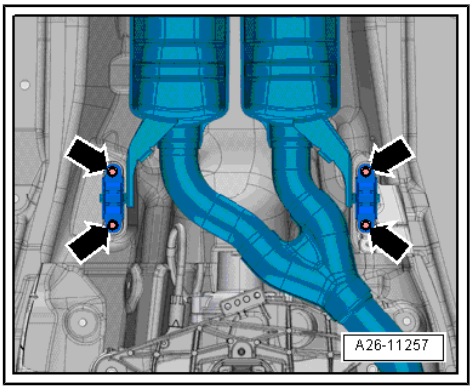

– Remove bolts -arrows- and detach gearbox support (right-side) -1- with gearbox mounting.

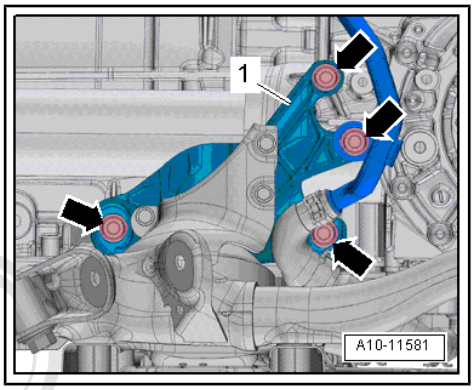

– Unplug electrical connector -arrow- for auxiliary hydraulic pump 1 for gearbox oil - V475- from right side of gearbox and move electrical wiring clear.

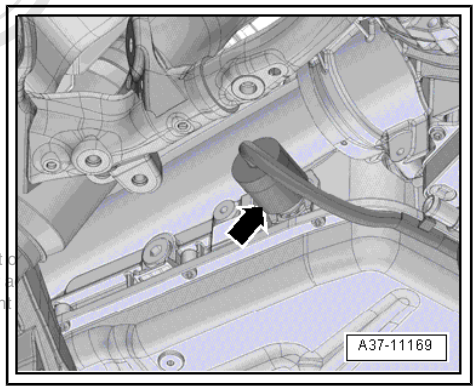

– Unplug electrical connector -2-.

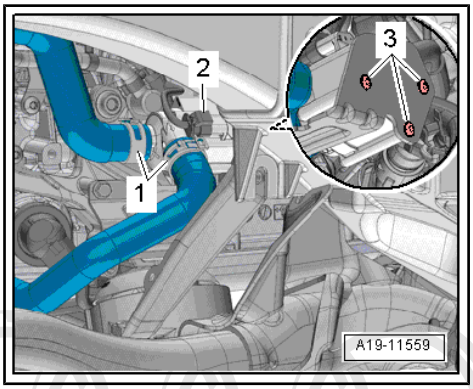

Note

Disregard -items 1, 3-.

Caution

Risk of irreparable damage to gearbox control unit (mechatronic unit) because of static discharge.

- ***Do NOT touch connector contacts in gearbox connector with your hands.***

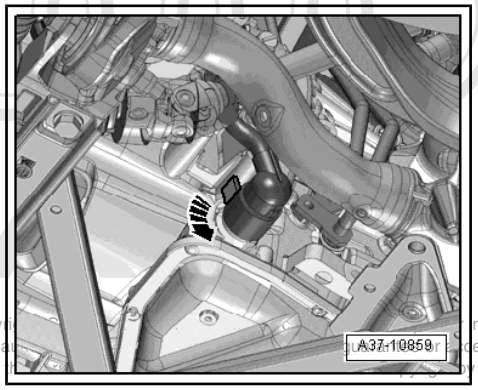

– Touch gearbox housing with your hand (without wearing gloves) to eliminate static charge.

– Turn retainer catch anti-clockwise -arrow- and unplug electrical connector at gearbox.

– Move clear electrical wiring harness at gearbox.

– Unplug electrical connectors:

1 - For left electrohydraulic engine mounting solenoid valve - N144- / right electrohydraulic engine mounting solenoid valve - N145-

2 - For charge air cooling pump - V188-

– Remove bolt -3- and move electrical wiring harness clear.

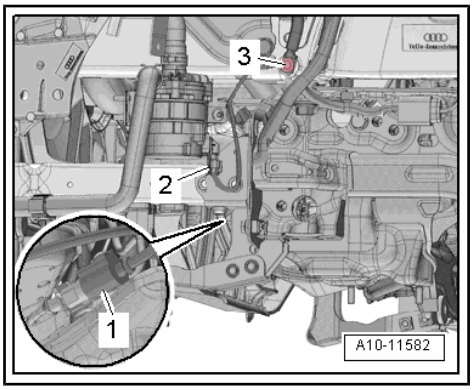

– Unscrew bolts -arrows- and remove torque reaction support -1-.

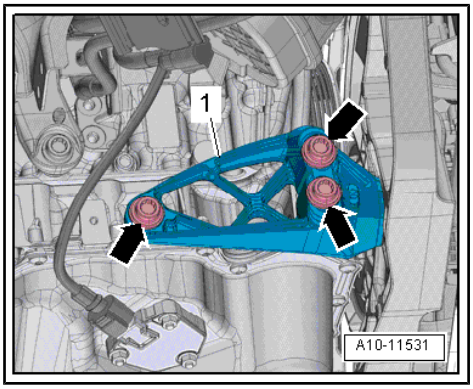

– Unplug electrical connector -1-.
– Press release tabs and disconnect secondary air hoses -2-.

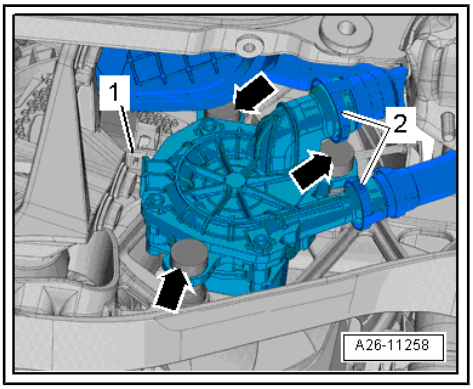

Note

Disregard -arrows-.

– Remove bolts -1- and detach underbody guard towards front -arrow-.

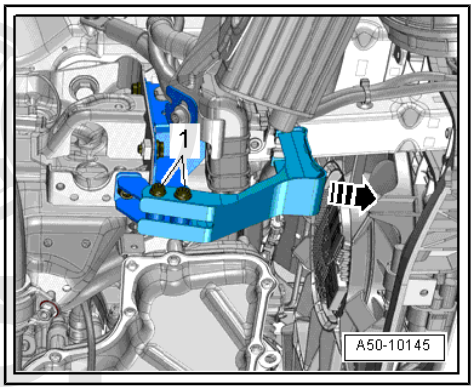

– Remove bolts -arrows- on both sides and detach cross member -1- for torque reaction support.

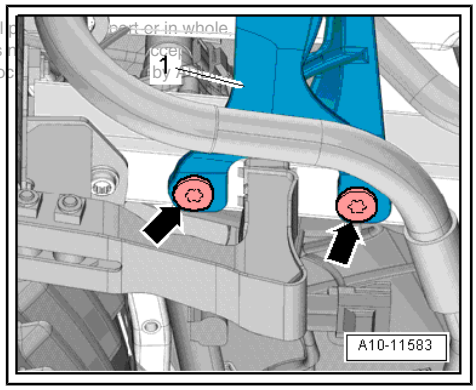

– Release catch -arrow- and open cover -4-.
– Remove bolts -1, 2- and move clear electrical wiring.
– Remove bolt -3-.
– Move fuse holder to the top and disengage at lock carrier.
– Move clear electrical wiring.

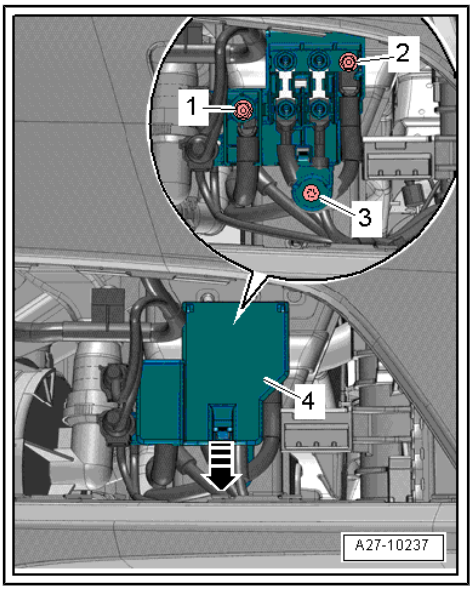

– Remove bolt -4- for battery positive wire -3- and bolt -2- for earth wire -1- and move electrical wiring clear.

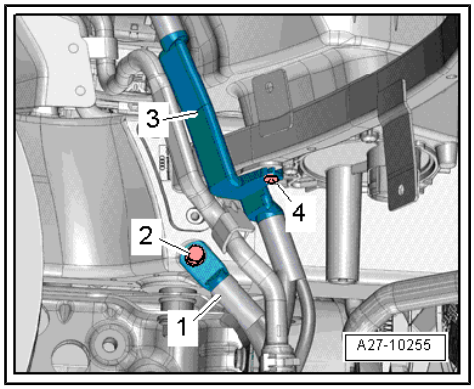

– Remove nut -1- and bolt -2- and move electrical wiring clear.

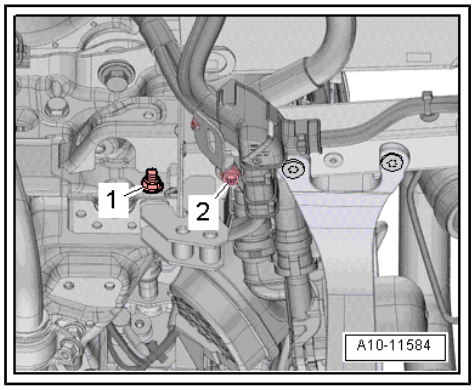

Note

Place a cloth underneath to catch escaping coolant.

– Remove bolts -arrows- and push ATF cooler slightly to the side.

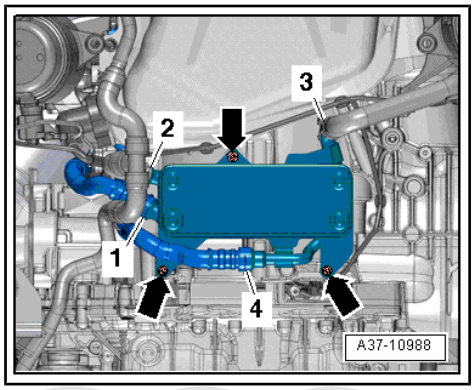

Note

Disregard items -1 ... 4-.

– Detach bottom cover -1- from gearbox -arrow-.

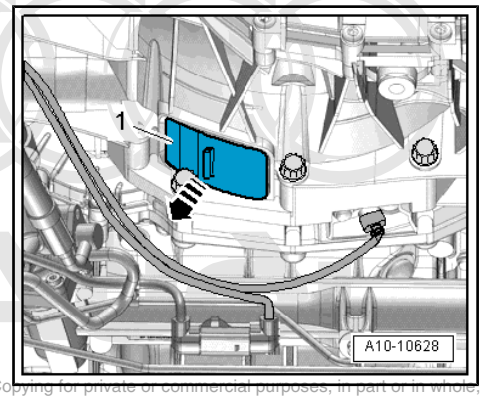

– Counterhold crankshaft on central bolt for vibration damper using angled ring spanner -1- when loosening bolts for electric drive motor - V141- .

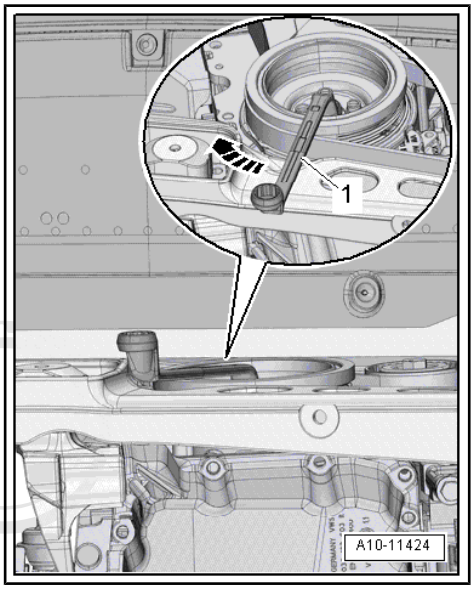

Note

When performing the next step, turn the crankshaft only in the normal direction of rotation -arrow-.

– Remove 3 bolts -arrow- for electric drive motor - V141- on drive plate, turning crankshaft 120° in normal direction of rotation each time.

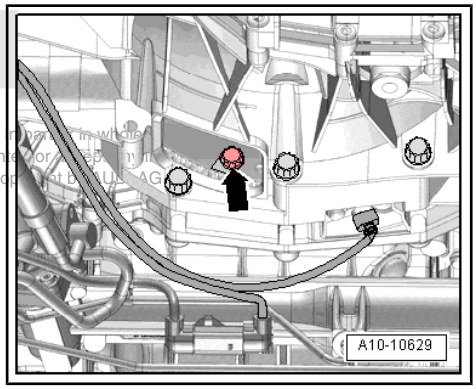

– Remove bolts -1, 6, 7, 8, 9, 10, 11- securing engine to gearbox.

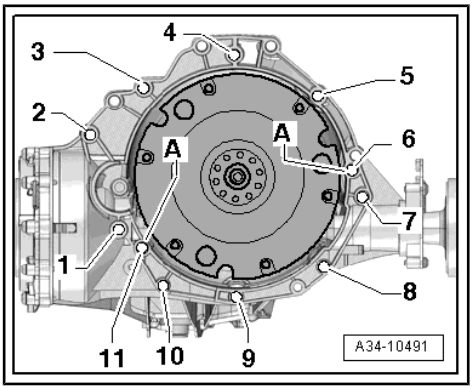

Note

Disregard -item A-.

– Remove bolts -1, 3- on both sides and detach longitudinal member (top) -2-.

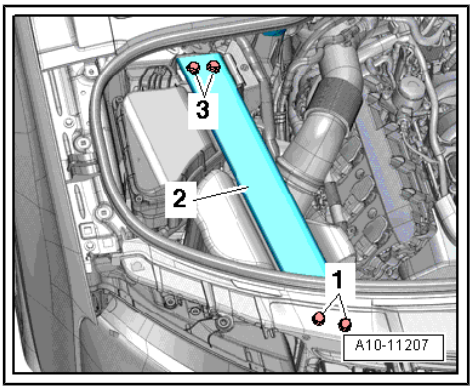

– Release hose clips -arrows- and remove air pipe -1-.

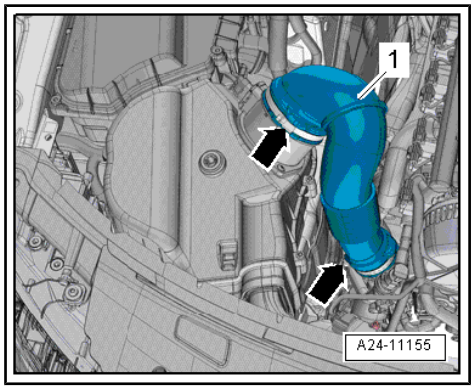

– Press release tabs and disconnect secondary air hose -1-.
– Unplug electrical connector -2- from air mass meter - G70- .
– Press catch down -arrow A- and push towards rear -arrow B-.
– Lift off air cleaner housing.

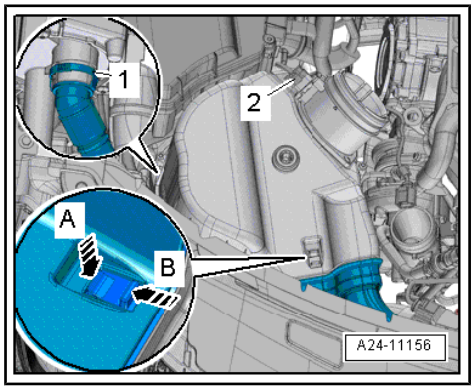

– Unplug electrical connector -1- at charge pressure sender - G31- .
– Move coolant hose clear.
– Release hose clips -arrows- and detach air hoses.
– Unscrew bolts -2- and detach air pipe.

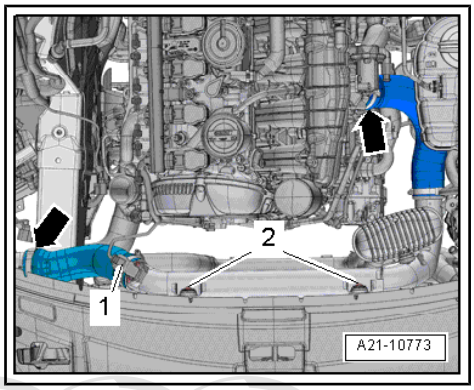

– Unplug electrical connector -2-.
– Lift retaining clips -1, 4- and disconnect coolant hoses.
– Remove bolt -3- and place coolant expansion tank to one side.
– Remove electrically driven air conditioner compressor from bracket ⇒ Heating, air conditioning; Rep. gr. 87 ; Air conditioner compressor; Detaching and attaching air conditioner compressor at bracket .

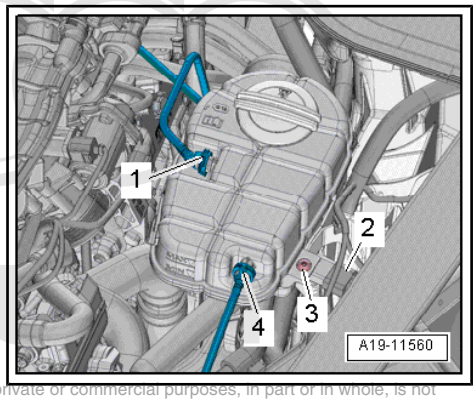

– Lift retaining clips -1, 2- and disconnect coolant hoses.
– Move coolant hoses clear to one side.

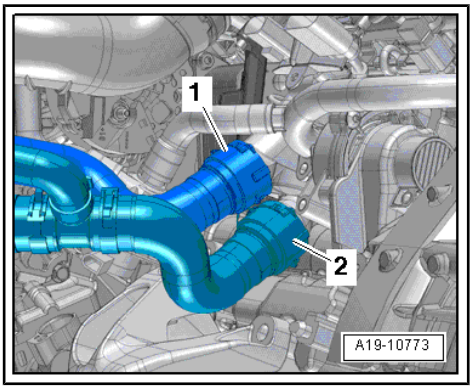

– Release catch -arrow- and open cover -1-.
– Remove nut -2- for electrical wiring.
– Move clear electrical wiring harness.

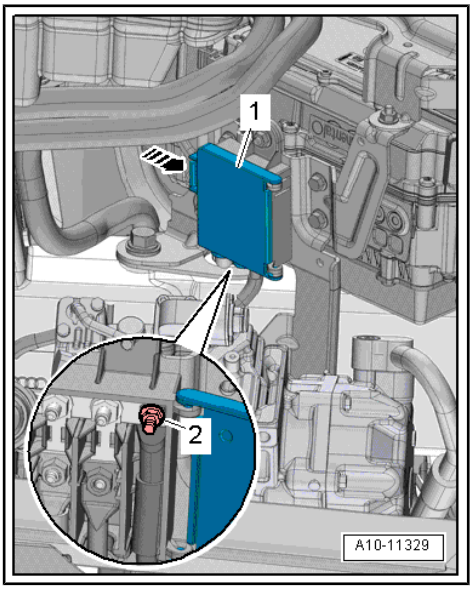

– Detach electrical connector -3- from bracket and unplug.
– Move clear electrical wiring harness -2-.
– Unscrew nuts -arrows- and detach cover -1-.

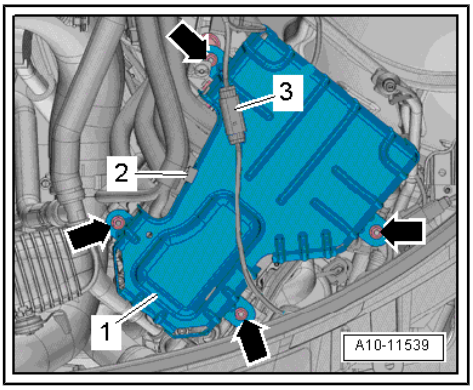

– Unplug electrical connector -arrow- and move wiring harness clear.

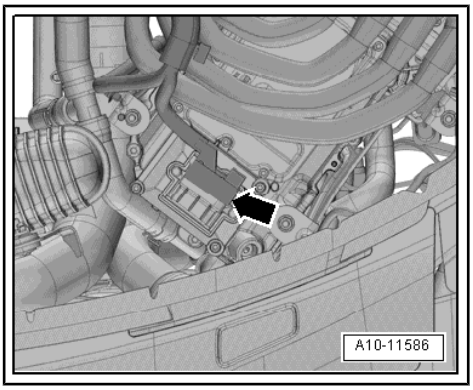

– Release hose clip -arrow- and disconnect vacuum hose.

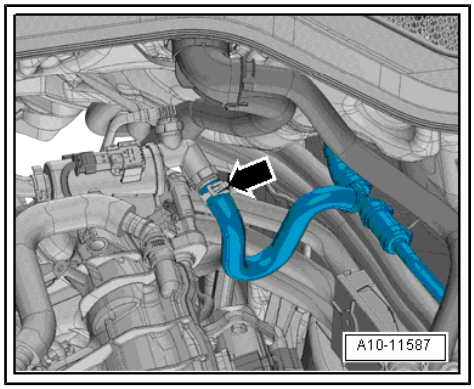

WARNING

Risk of injury caused by fuel.

- *To allow the fuel pressure to dissipate, wrap a clean cloth around the connection and carefully loosen the connection before opening the fuel system.*

Caution

Risk of damage caused by particles of dirt.

- *Observe rules for cleanliness when working on the fuel supply system* *⇒ page 13* *.*

– Push down protective sleeve -1- and disconnect fuel line.
– First press hose connector -2- downwards -arrow A-, then press release tabs -arrow B-.
– Pull off hose connector, keeping release tabs depressed.
– Release hose clip -3- and detach hose for activated charcoal filter.
– Remove plenum chamber cover ⇒ General body repairs, exterior; Rep. gr. 50 ; Bulkhead; Removing and installing plenum chamber cover .

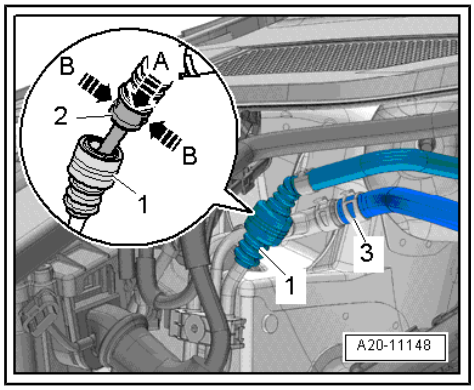

– Release cover -2- and swivel to side -arrow-.
– Remove nuts -4- and move positive wires clear.
– Unscrew nuts -3- and detach positive wires -1-.

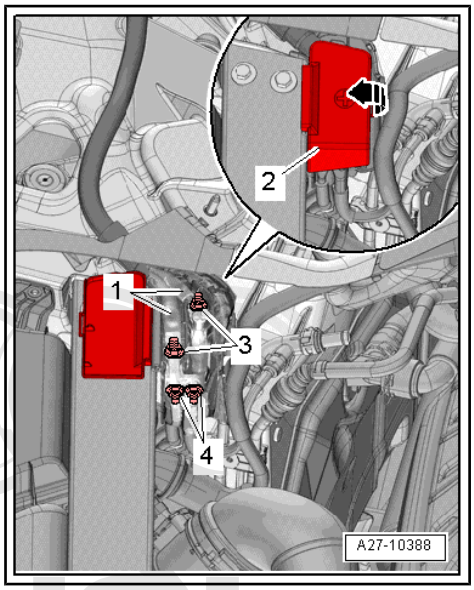

– Release retaining tabs -2 and 4- and swivel positive wires -1 and 3- out of mounting.

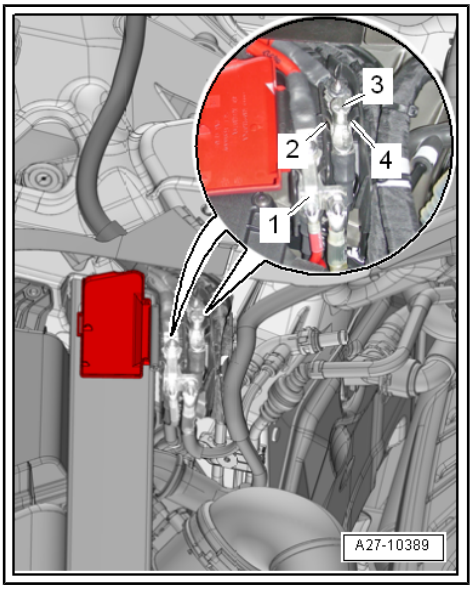

– Remove bolts -arrows- and detach cover -1- for electronics box in engine compartment.

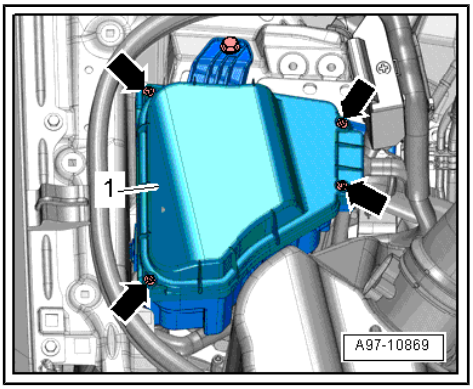

– Unplug electrical connectors -1, 2, 3- and move electrical wiring clear.

– Release catches -arrows- and detach relay carrier with fuse holder -4-.

– Release fastener -5- and detach condenser -6-.

– Disengage engine wiring harness at electronics box in engine compartment, move clear and place onto engine.

– Remove body brace ⇒ Running gear, axles, steering; Rep. gr. 40 ; Suspension strut, upper links; Removing and installing body brace .

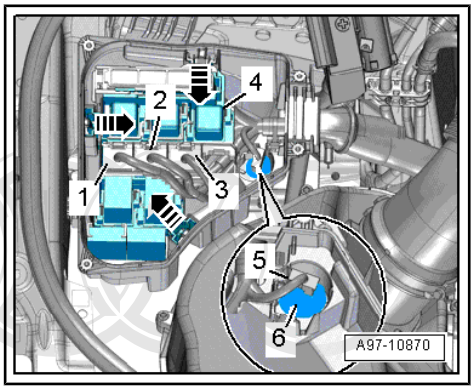

– Release clips -arrows-, take out engine control unit - J623- -item 2- and place onto engine.

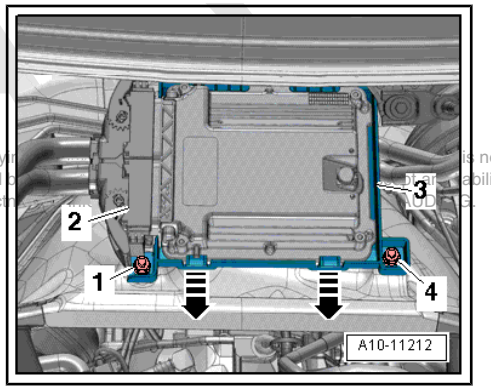

Note

Disregard -items 1, 3, 4-.

– Remove plenum chamber partition panel ⇒ General body repairs, exterior; Rep. gr. 50 ; Bulkhead; Exploded view - plenum chamber partition panel .

– Lift retaining clips -1, 3- and disconnect coolant hoses.

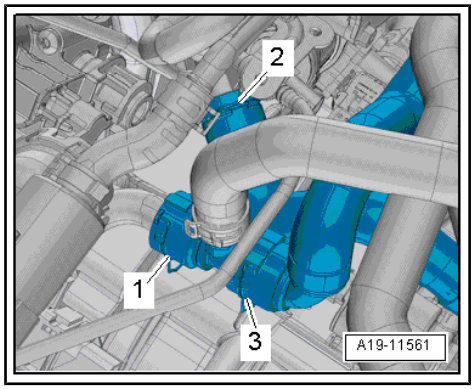

– Unplug electrical connectors and move wiring clear:

1 - For gearbox oil cooling valve - N509-

2 - For coolant circulation pump - V50-

3 - For high-voltage wiring harness for drive motor - PX2-

4 - For Lambda probe after catalytic converter - G130-

5 - For drive motor rotor position sender 1 - G713-

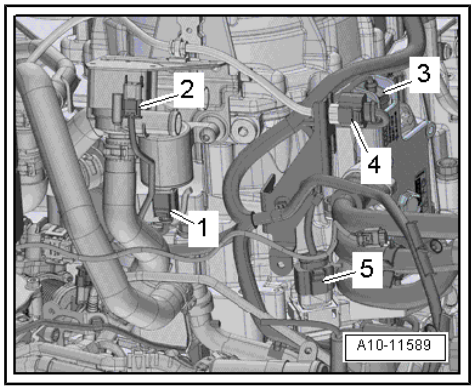

– Release hose clip -2- and detach coolant hose.

– Unscrew bolts -arrows- and remove pump unit.

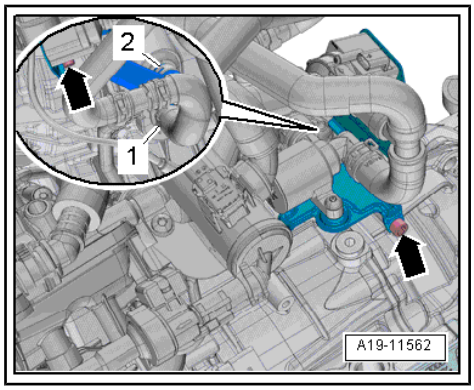

Note

Disregard -item 1-.

– Remove bolts -2 ... 5- securing gearbox to engine.

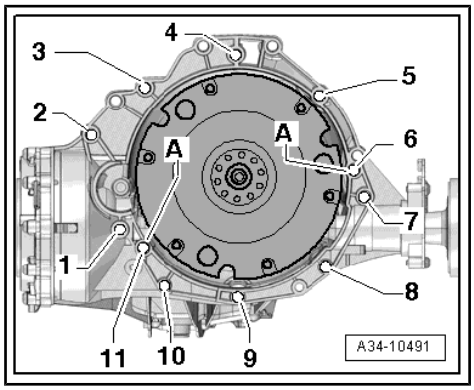

Note

Disregard -item A-.

– Separate starter from gearbox and leave in position.

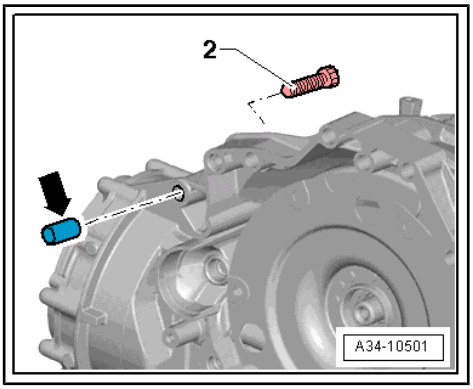

Note

Bolt -2- secures the starter to the gearbox and is provided with an additional spacer sleeve -arrow-.

– Remove plenum chamber covers (both sides) ⇒ General body repairs, exterior; Rep. gr. 50 ; Bulkhead; Removing and installing plenum chamber cover .

– Set up support bracket - 10 - 222 A- on suspension turrets (left and right) as illustrated.

– Engage gearbox support - 3147- on gearbox in hook - 10 - 222 A /10-

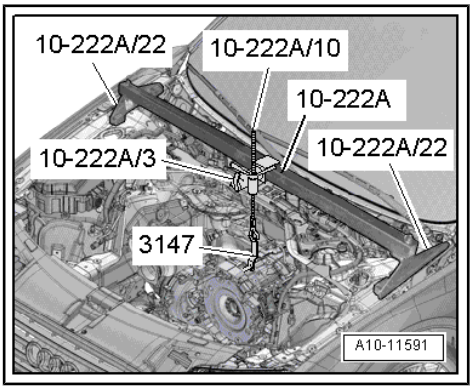

Note

- *For illustration purposes, the installation position is shown with the engine removed.*
- *If necessary, modify lower part of gearbox support - 3147- slightly.*

– Take up weight of gearbox with spindle of support bracket.

WARNING

Accident risk from loose components of lifting tackle.

- ***The support hooks and retaining pins on the lifting tackle must be secured with locking pins.***

– Engage lifting tackle - 2024 A- on engine and workshop hoist - VAS 6100- .

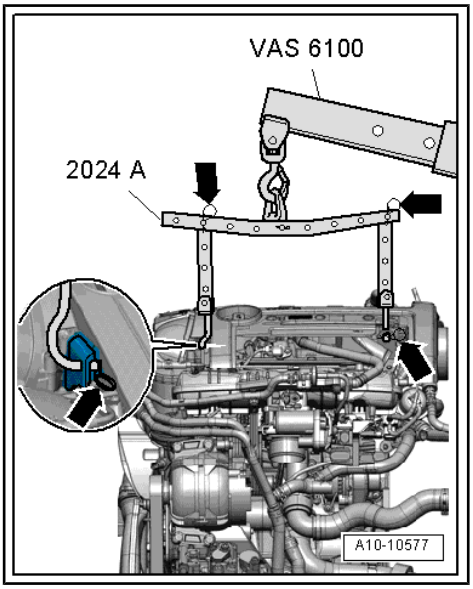

Note

To adjust to the centre of gravity of the assembly, the perforated rails of the support hooks must be positioned as shown.

– Remove bolt -arrow- for engine mounting (right-side).

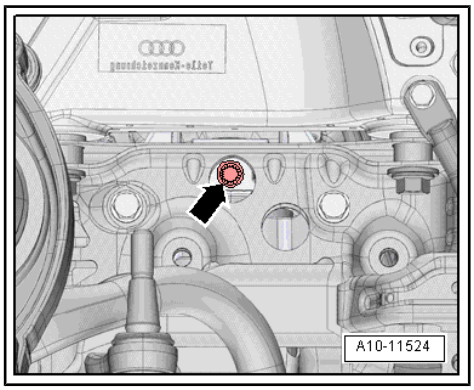

– Take electrical connector -2- out of bracket and push to the side.
– Remove bolt -arrow- for engine mounting (right-side).
– Raise engine until engine mountings are clear.
– Tighten spindle of support bracket - 10 - 222 A- further.

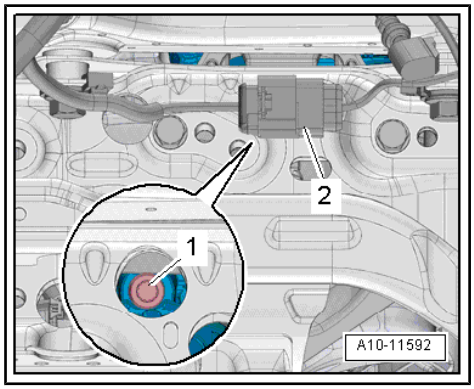

Caution

Danger of damage to hoses, pipes and wiring connections and to engine compartment.

- *Check that all hoses and wiring connections between engine, gearbox, subframe and body have been detached.*
- *Carefully guide engine out of engine compartment when lifting out.*

Note

A second mechanic is required to carefully open bonnet as much as possible when lifting engine out.

– Use small screwdriver to slightly lift retaining clip -arrow- at both ends and detach gas strut -1- from ball stud -2- at top.
– Separate engine from gearbox and lift engine out of engine compartment.
– Press gas struts back onto ball studs.

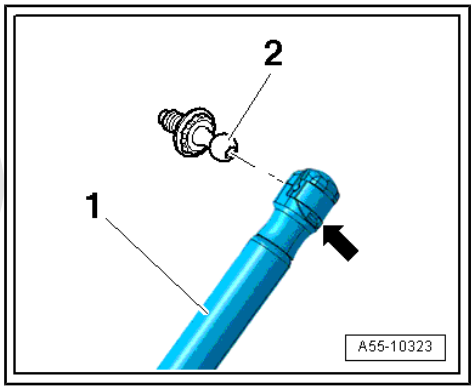

1.2 Securing engine to engine and gearbox support

Special tools and workshop equipment required

- Lifting tackle - 2024 A-
- Workshop hoist - VAS 6100-
- Engine and gearbox support - VAS 6095-

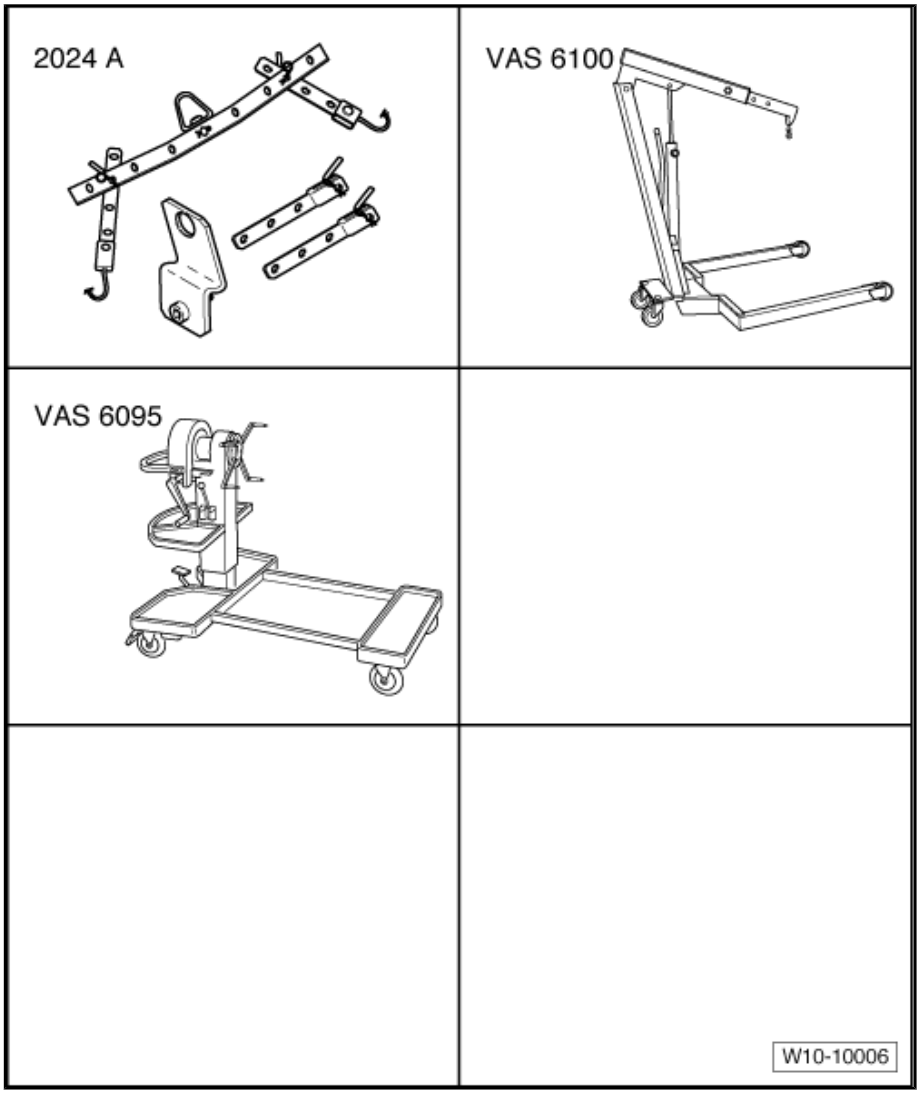

- Counterhold tool - 10 - 201-

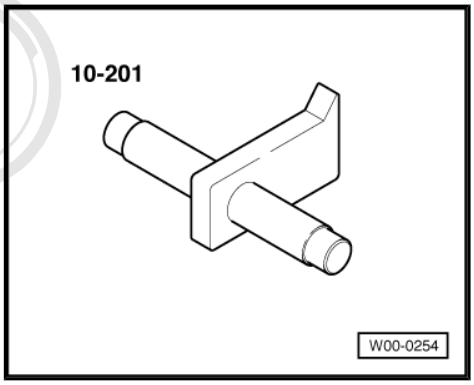

Procedure

– Insert counterhold tool - 10 - 201- to slacken bolts.

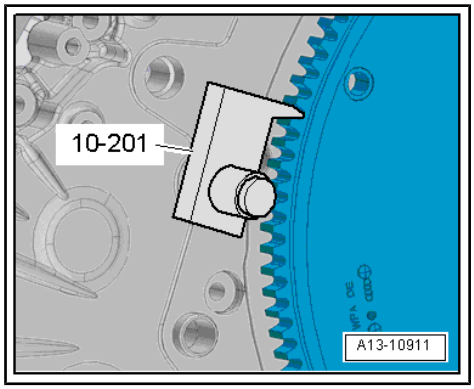

> **Caution**
>
> *Take care not to damage outer surface of bearing flange on drive plate.*
>
> ♦ *Use a multi-point socket bit with a length of at least 40 mm to slacken and tighten the drive plate bolts.*

– Remove bolts and take off drive plate.

> **WARNING**
>
> *Accident risk from loose components of lifting tackle.*
>
> ♦ *The support hooks and retaining pins on the lifting tackle must be secured with locking pins -arrows-.*

– Engage lifting tackle - 2024 A- on engine and workshop hoist - VAS 6100- .

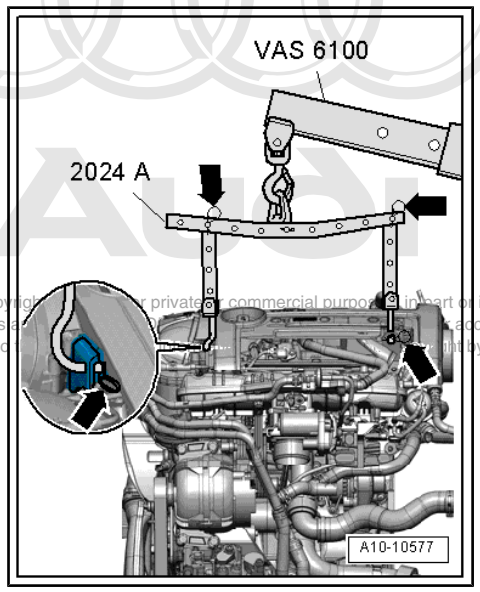

> **Note**
>
> *To adjust to the centre of gravity of the assembly, the perforated rails of the support hooks must be positioned as shown.*

– Secure engine to engine and gearbox support - VAS 6095- when performing assembly work.

1.3 Installing engine

Special tools and workshop equipment required

♦ Transport lock - T40170-

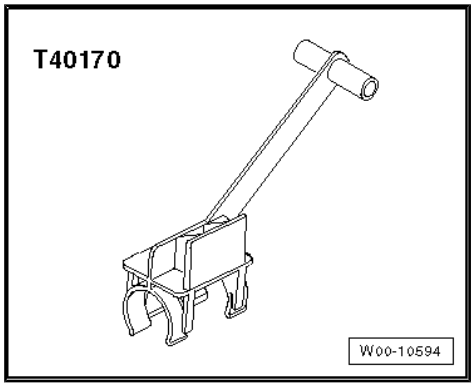

Tightening torques

Note

- *Tightening torques apply only to lightly greased, oiled, phosphated or black-finished nuts and bolts.*
- *Additional lubricants such as engine or gearbox oil may be used, but do not use lubricants containing graphite.*
- *Do not use de-greased parts.*
- *Tolerance for tightening torques: ± 15 %.*

Component		Nm
Bolts/nuts	M6	9
	M7	15
	M8	20
	M10	40
	M12	65

- ⇒ “2.1 Exploded view - assembly mountings”, page 42
- Engine to gearbox ⇒ Rep. gr. 37 ; Removing and installing gearbox; Tightening torques for gearbox

Procedure

Note

- *Renew the bolts tightened with specified tightening angle.*
- *Renew self-locking nuts and bolts as well as seals, gaskets and O-rings.*
- *Hose connections and air pipes and hoses must be free of oil and grease before assembly.*
- *Secure all hose connections with the correct type of hose clips (same as original equipment) ⇒ Electronic parts catalogue .*
- *To ensure that the air hoses can be properly secured at their connections, spray rust remover onto the worm thread of used hose clips before installing.*
- *Fit all cable ties in the original positions when installing.*

– Ensure that intermediate plate is engaged on sealing flange and pushed onto dowel sleeves -arrows-.

– Install drive plate ⇒ page 69 .

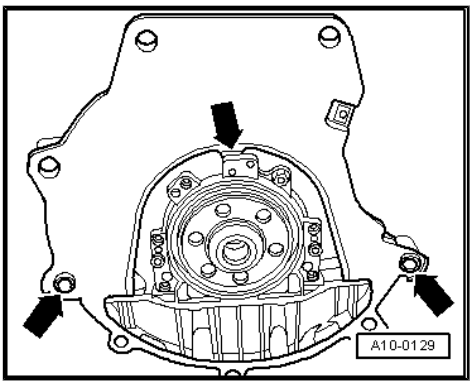

– The following preparations are required before joining engine and gearbox.

– Turn electric drive motor - V141- until hole next to notch -arrow- is visible in recess in bottom of gearbox housing, as shown in illustration.

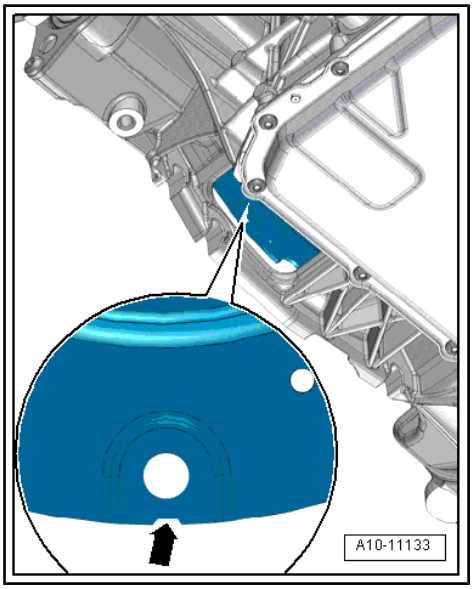

Note

There is only one notch on the circumference; turn the electric drive motor - V141- accordingly.

– Insert transport lock - T40170- into gearbox housing from below and clamp onto flange shaft -1-.

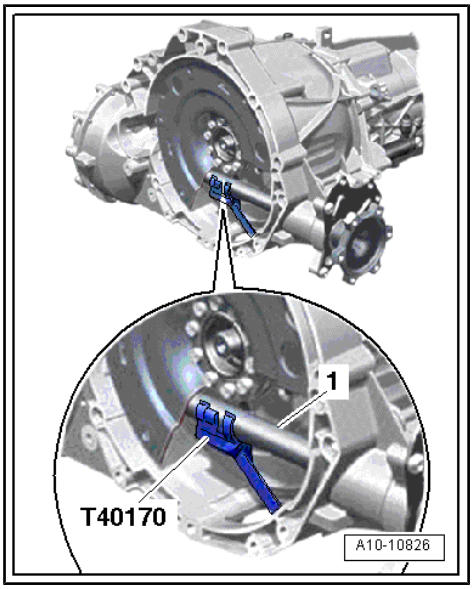

– Check whether dowel sleeves -A- for centring engine and gearbox are fitted in cylinder block; install missing dowel sleeves.

– Check whether aluminium bolts securing engine to gearbox can be reused; if so, apply marking ⇒ Rep. gr. 37 ; Removing and installing gearbox; Tightening torques for gearbox .

– Bring gearbox into position on engine and tighten bolts -7 … 11- securing engine to gearbox.

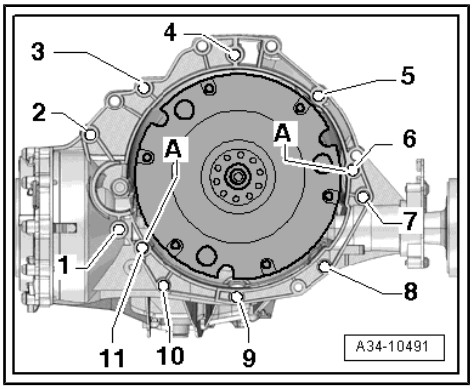

– Release spindle of support bracket - 10-222 A- .
– Lower workshop hoist and place engine/gearbox assembly onto engine mounting.

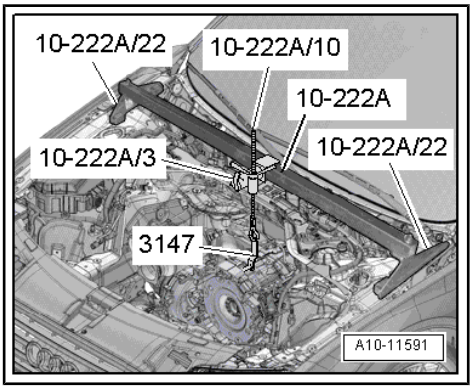

– Screw in bolt -arrow- for engine mounting (left-side).
– Detach workshop hoist - VAS 6100- and lifting tackle - 2024 A- .

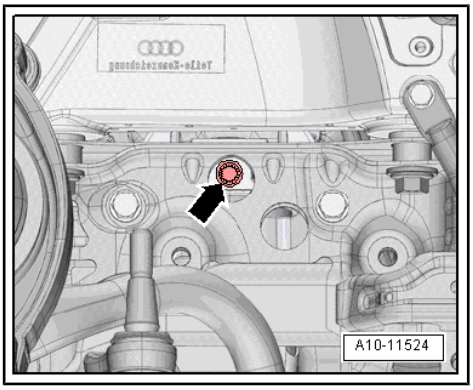

– Screw in bolts -3 ... 6- of engine/gearbox assembly and tighten.

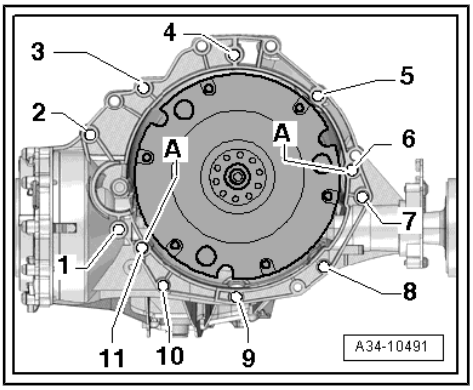

– Remove starter ⇒ Electrical system; Rep. gr. 27 ; Starter; Removing and installing starter .

Note

Starter must be removed so that end seal -1- can be inserted correctly in starter opening.

– Clip end seal -1- into starter aperture.
• End seal must be flush with starter opening -2- -arrow-.

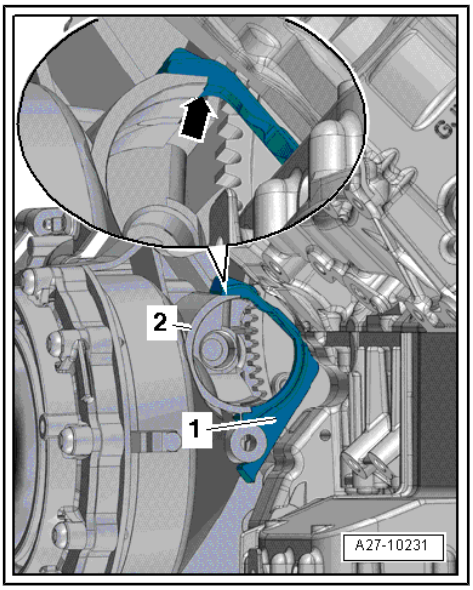

Note

Apply a small amount of lubricant to the end seal if the starter cannot be installed easily.

Installation is carried out in the reverse order; note the following:

– Install starter, fitting spacer sleeve -arrow- between starter and gearbox onto bolt -2- ⇒ Electrical system; Rep. gr. 27 ; Starter; Removing and installing starter .
– Tighten remaining bolts securing engine to gearbox.
– Remove transport lock - T40170- .

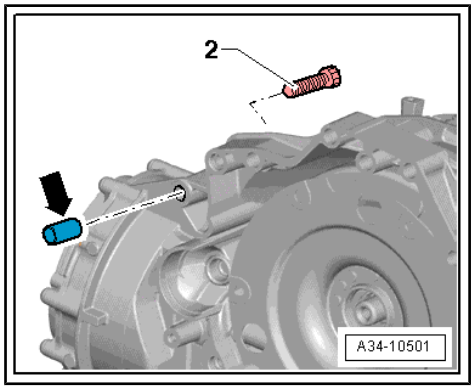

– Press electric drive motor - V141- slightly against drive plate (on engine).

Tightening sequence - electric drive motor - V141- to drive plate

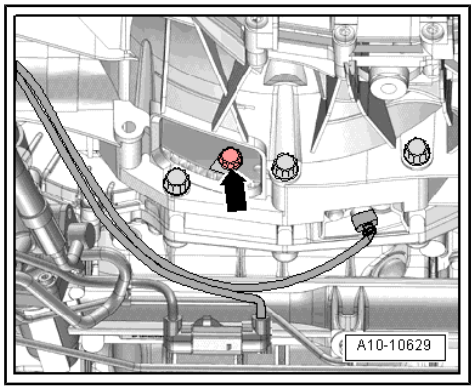

Note

Use ring spanner insert AF 16 - V.A.G 1332/14- to tighten bolts.

– Hand-tighten first bolt -arrow- (2 Nm).

– Turn crankshaft via vibration damper 240° further in normal direction of engine rotation -arrow- with an angled ring spanner -1-.

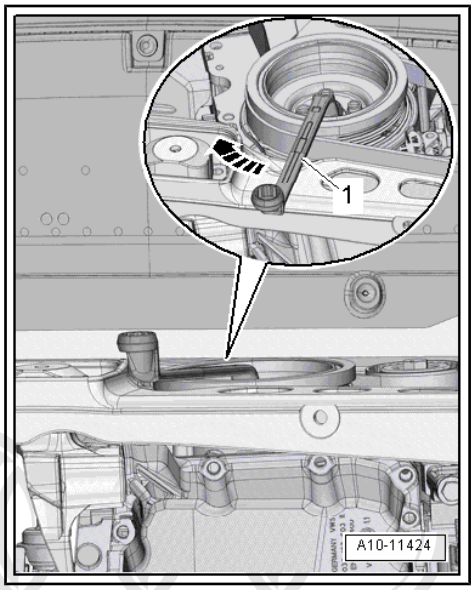

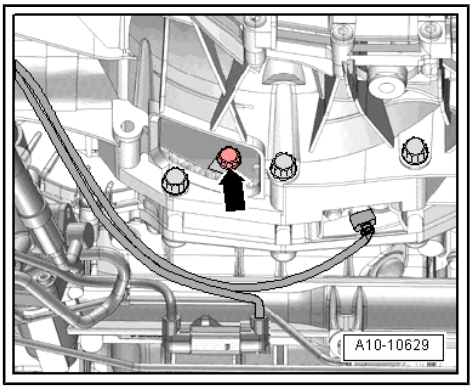

– Tighten bolt -arrow- accessible in this crankshaft position to specified torque ⇒ Electrical system, hybrid; Rep. gr. 93 ; Electric drive motor; Exploded view - electric drive motor .

– Turn crankshaft by 120° each time and tighten remaining 2 bolts to specified torque.

The remaining installation steps are carried out in the reverse sequence.

– Install engine support and engine mounting ⇒ page 42 .

– Install pump unit ⇒ page 195 .

– Install plenum chamber partition panel ⇒ General body repairs, exterior; Rep. gr. 50 ; Bulkhead; Exploded view - plenum chamber partition panel .

– Install air pipe ⇒ page 239 .

– Install ATF cooler ⇒ Rep. gr. 37 ; ATF circuit; Removing and installing ATF cooler .

– Install electrically driven air conditioner compressor ⇒ Heating, air conditioning; Rep. gr. 87 ; Air conditioner compressor; Detaching and attaching air conditioner compressor at bracket .

– Install torque reaction support with cross member ⇒ page 47 .

– Electrical connections and routing ⇒ Electrical system, hybrid; Rep. gr. 93 ; High-voltage wiring; Overview of fitting locations - high-voltage wiring , ⇒ Electrical system; Rep. gr. 97 ; Relay carriers, fuse carriers, electronics boxes and ⇒ Current flow diagrams, Electrical fault finding and Fitting locations.

– Install gearbox support with gearbox mounting ⇒ page 49 .

– Install front silencers ⇒ page 296 .

– Align the exhaust system so it is free of stress ⇒ page 298 .

– Install subframe cross brace ⇒ Running gear, axles, steering; Rep. gr. 40 ; Subframe; Exploded view - subframe .

– Install tunnel cross-piece ⇒ General body repairs, exterior; Rep. gr. 66 ; Underbody trim; Exploded view - underbody trim .

– Install noise insulation panels ⇒ General body repairs, exterior; Rep. gr. 66 ; Noise insulation; Exploded view - noise insulation .

– Install wheel housing liners ⇒ General body repairs, exterior; Rep. gr. 66 ; Wheel housing liners; Exploded view - wheel housing liner (front) .

– Install engine control unit ⇒ page 291 .

– Install electrical wiring, terminal 30 wiring junction 2 - TV22- and cover for electronics box in engine compartment ⇒ Electrical system; Rep. gr. 97 ; Relay carriers, fuse carriers, electronic boxes; Overview of fitting locations - relay carriers, fuse carriers, electronic boxes .

– Install body brace ⇒ Running gear, axles, steering; Rep. gr. 40 ; Suspension strut, upper links; Exploded view - suspension strut, upper links .

– Install closure plate for bumper cover (front) ⇒ General body repairs, exterior; Rep. gr. 63 ; Bumper (front); Removing and installing attachments .

Re-energising the high-voltage system

DANGER!

High voltage can cause fatal injury.

Danger of severe or fatal injuries from electric shock.

- *The high-voltage system may only be re-energised by a suitably qualified person (Audi high-voltage technician).*
- *The system may only be re-energised using the vehicle diagnostic tester via "Guided Fault Finding".*
- *The vehicle is then made ready for operation again by the qualified person (Audi high-voltage technician).*
- *The qualified person (Audi high-voltage technician) marks the vehicle by attaching the appropriate warning signs.*

Note

- *Re-energising high-voltage system:*
- *Connect vehicle diagnostic tester*
- *Select* `Guided Fault Finding` *mode*
- *Using the* `Go To` *button, select the following menu options in succession:*
- `Selecting function/component`
- `Body`
- `Electrical system`
- `Self-diagnosis compatible systems`
- `8C - Hybrid battery management -J840`
- `8C - Hybrid battery management, functions`
- `51 - Re-energise high-voltage system (Rep. gr. 93)`

– Observe steps required after re-connecting battery ⇒ Electrical system; Rep. gr. 27 ; Battery; Disconnecting and connecting battery .

Caution

Risk of irreparable damage to control units because of excessive voltage.

- *Never use battery charging equipment for boost starting.*

– Install air cleaner housing ⇒ page 257 .

– Check oil level ⇒ Maintenance ; Booklet 410 .

Note

Do not reuse coolant.

– Connect coolant hoses with plug-in connector ⇒ page 218 .

– Fill up with coolant ⇒ page 186 .

– After renewing engine, misfire adaptions must be reset. To do so, select `01 - Reset adaptions misfires` in `Guided Functions` mode of ⇒ Vehicle diagnostic tester.

2 Assembly mountings

2.1 Exploded view - assembly mountings

Engine mounting

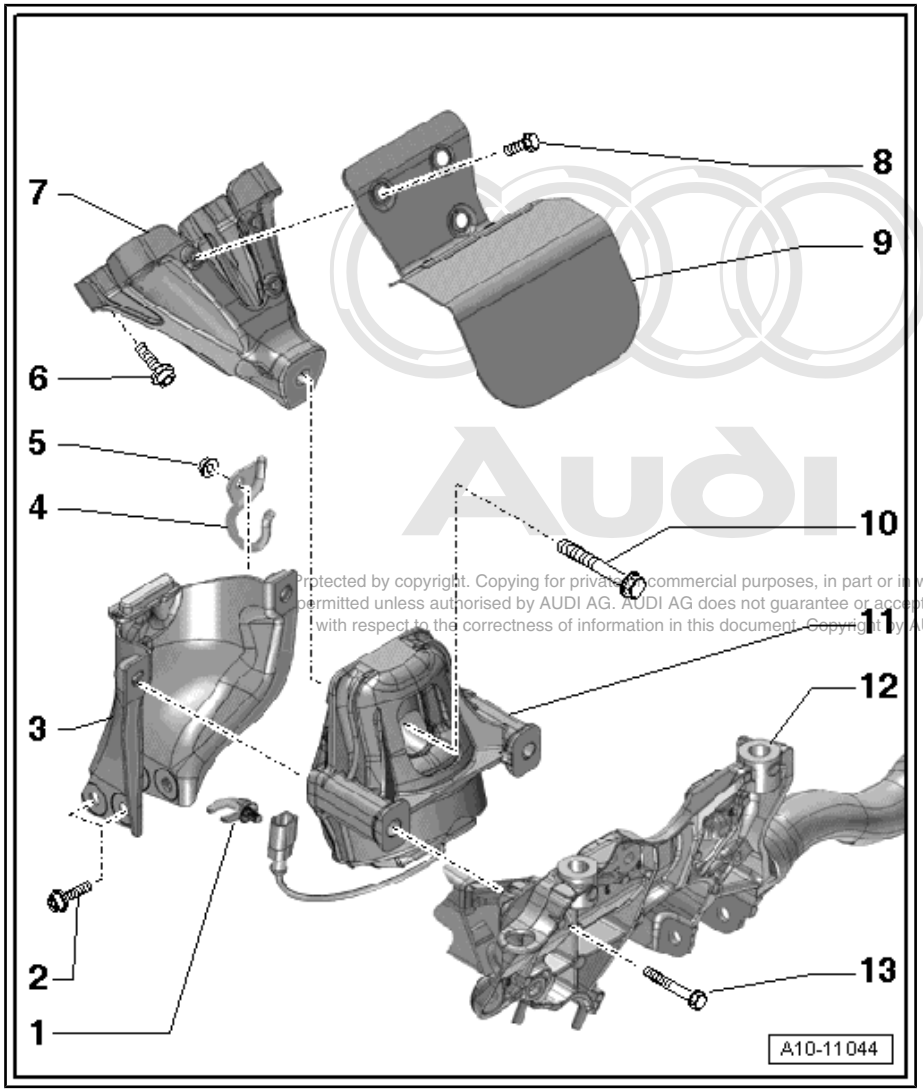

1 - Not fitted

2 - Bolt
- ❑ 20 Nm

3 - Retaining plate
- ❑ For engine mounting
- ❑ Renew bracket if engine mounting is defective
- ❑ Check bracket on opposite side; renew if necessary

4 - Not fitted

5 - Nut
- ❑ 9 Nm

6 - Bolt
- ❑ 40 Nm

7 - Engine support

8 - Bolt
- ❑ 10 Nm

9 - Heat shield

10 - Bolt
- ❑ Renew
- ❑ 90 Nm + turn 90° further

11 - Engine mounting
- ❑ With left electrohydraulic engine mounting solenoid valve - N144- / right electrohydraulic engine mounting solenoid valve - N145-
- ❑ Removing and installing ⇒ page 46
- ❑ Always renew both sides together

12 - Subframe

13 - Bolt
- ❑ 55 Nm

Cross member and torque reaction support

1 - Cross member

2 - Washer

3 - Nut
- ❑ 9 Nm

4 - Bolt
- ❑ 20 Nm

5 - Bonded rubber bush

6 - Clip

7 - Buffer

8 - Bolt
- ❑ 50 Nm

9 - Torque reaction support

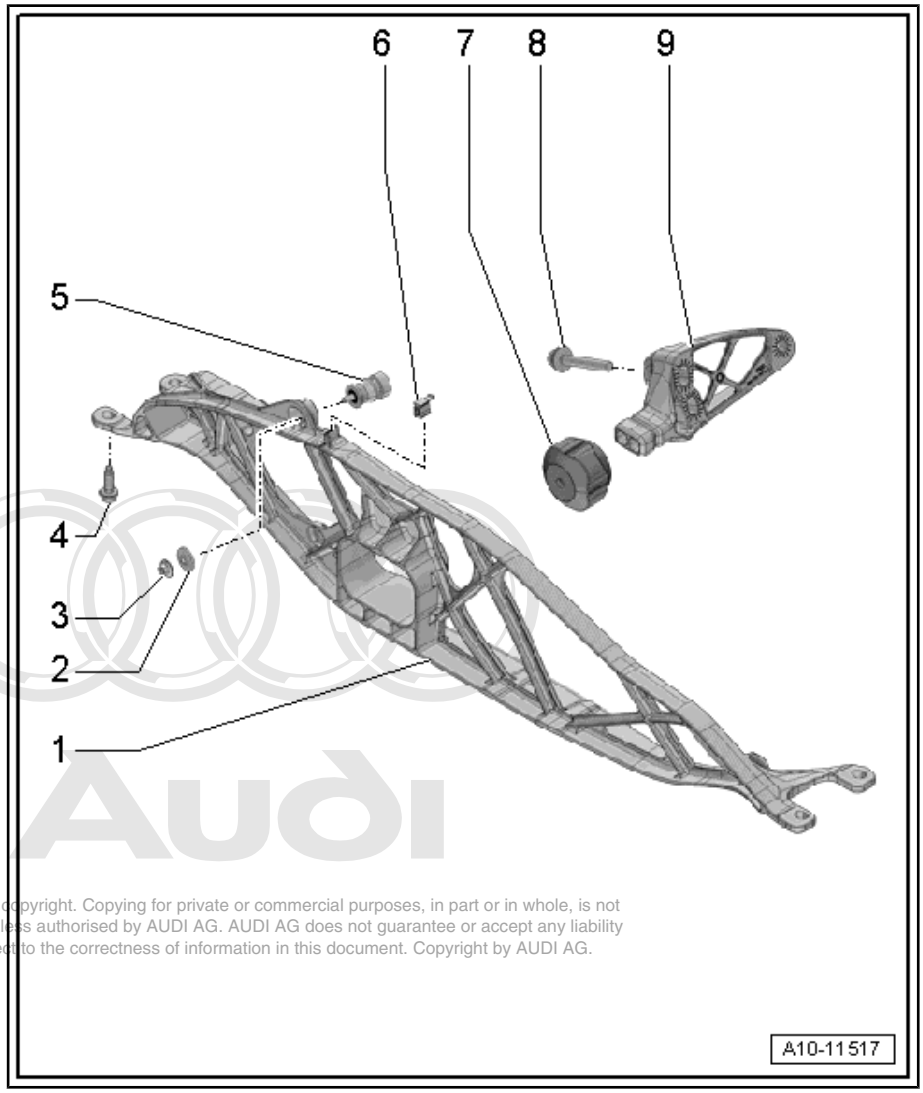

Gearbox mounting

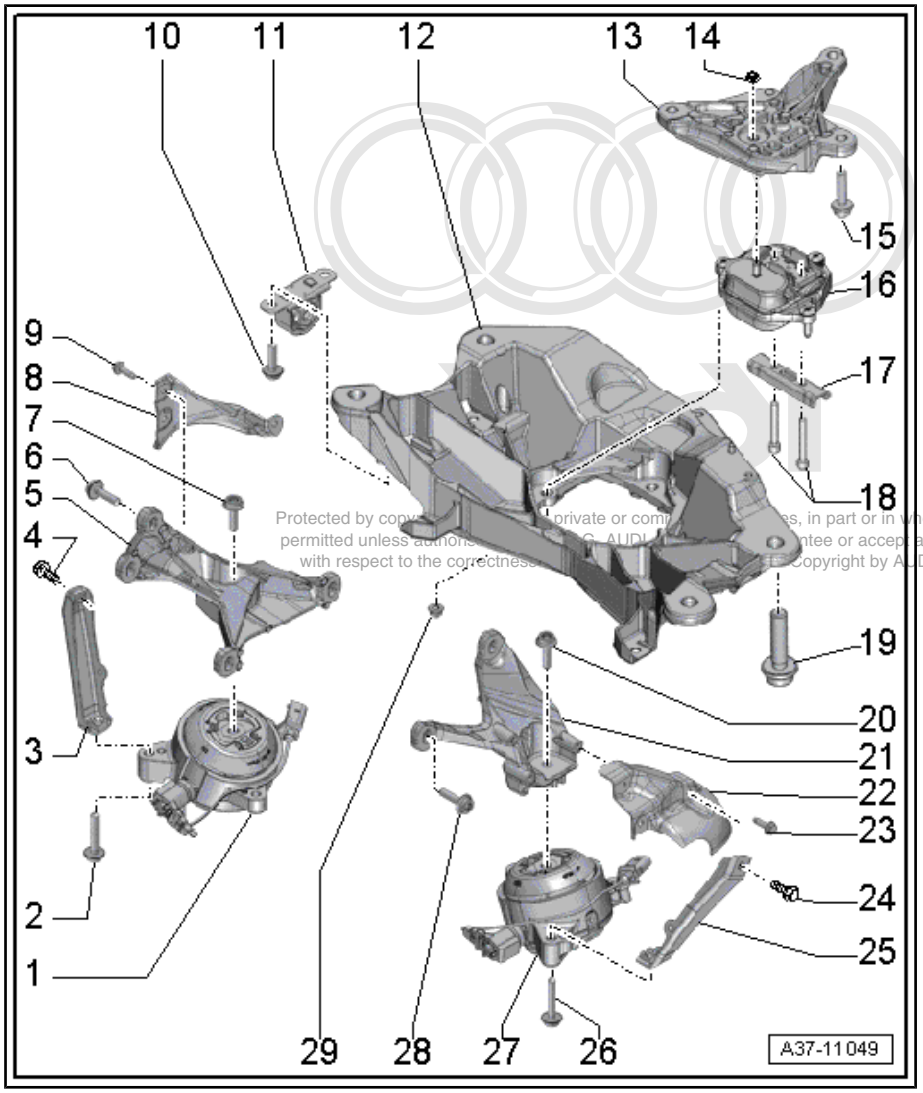

1 - Gearbox mounting (right-side)

- ❑ With gearbox mounting valve 1 - N262-
- ❑ Removing and installing ⇒ page 51

2 - Bolt

- ❑ Tightening torque ⇒ Rep. gr. 37 ; Assembly mountings; Exploded view - assembly mountings

3 - Support

4 - Bolt

- ❑ Tightening torque ⇒ Rep. gr. 37 ; Assembly mountings; Exploded view - assembly mountings

5 - Gearbox support (right-side)

6, 7 - Bolts

- ❑ Tightening torque ⇒ Rep. gr. 37 ; Assembly mountings; Exploded view - assembly mountings

8 - Heat shield

9 - Bolt

- ❑ Tightening torque ⇒ Rep. gr. 37 ; Assembly mountings; Exploded view - assembly mountings

10, 11 - Not fitted

12 - Tunnel cross-member

- ❑ Removing and installing ⇒ Rep. gr. 37 ; Assembly mountings; Exploded view - assembly mountings

13 - Gearbox support (rear)

- ❑ Removing and installing ⇒ page 52

14 - Nut

- ❑ Only remove if detaching gearbox mounting from gearbox support
- ❑ Tightening torque ⇒ Rep. gr. 37 ; Assembly mountings; Exploded view - assembly mountings

15 - Bolt

- ❑ Tightening torque ⇒ Rep. gr. 37 ; Assembly mountings; Exploded view - assembly mountings

16 - Gearbox mounting (rear)

17 - Stop (bottom)

Stop (bottom)

18, 19, 20 - Bolts

- ❑ Only remove bolts -18- if detaching gearbox mounting from gearbox support
- ❑ Tightening torque ⇒ Rep. gr. 37 ; Assembly mountings; Exploded view - assembly mountings

21 - Gearbox support (left-side)

22 - Heat shield

23, 24 - Bolts

- ❑ Tightening torque ⇒ Rep. gr. 37 ; Assembly mountings; Exploded view - assembly mountings

25 - Support

26 - Bolt

- ❑ Tightening torque ⇒ Rep. gr. 37 ; Assembly mountings; Exploded view - assembly mountings

27 - Gearbox mounting (left-side)

28 - Bolt

- ❑ Tightening torque ⇒ Rep. gr. 37 ; Assembly mountings; Exploded view - assembly mountings

29 - Nut

- ❑ Tightening torque ⇒ Rep. gr. 37 ; Assembly mountings; Exploded view - assembly mountings

2.2 Supporting engine in installation position

Special tools and workshop equipment required

- ♦ Support bracket - 10 - 222 A-

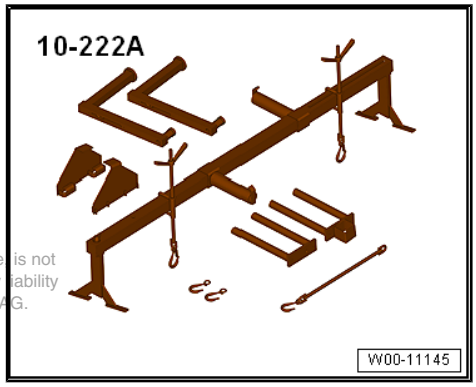

Supporting

> ⚠ **WARNING**
>
> *Risk of accident when weight of engine is shifted.*
>
> ♦ *In order to support the engine as described below, the gearbox and tunnel cross members must be installed.*

– Remove engine cover panel ⇒ page 54 .

– Remove lock carrier cover ⇒ General body repairs, exterior; Rep. gr. 63 ; Bumper (front); Removing and installing attachments .

– Remove longitudinal member (top) on both sides ⇒ General body repairs, exterior; Rep. gr. 50 ; Lock carrier; Exploded view - lock carrier .

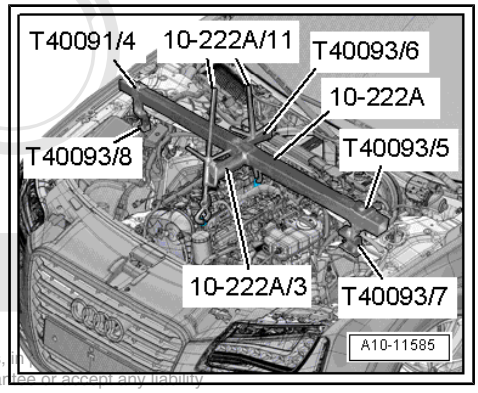

– Set up support bracket - 10 - 222 A- on suspension turrets (left and right) as illustrated.

– Attach spindles -10 - 222 A /11- to engine lifting eyes.

– Evenly take up weight of engine with spindles.

Assembling

Installation is carried out in the reverse order; note the following:

– Install lock carrier cover ⇒ General body repairs, exterior; Rep. gr. 63 ; Bumper (front); Removing and installing attachments .

– Install engine cover panel ⇒ page 54 .

Tightening torques

♦ Upper longitudinal member ⇒ General body repairs, exterior; Rep. gr. 50 ; Lock carrier; Exploded view - lock carrier

2.3 Removing and installing engine mountings

Note

♦ *The following chapter describes the procedure for the engine mounting (left-side).*

♦ *Renew engine mountings on both sides together.*

Removing

– Support engine with support bracket ⇒ page 45 .

– Remove noise insulation (front) ⇒ General body repairs, exterior; Rep. gr. 66 ; Noise insulation; Removing and installing noise insulation .

– Remove front section of front wheel housing liner (left-side) ⇒ General body repairs, exterior; Rep. gr. 66 ; Wheel housing liner; Removing and installing wheel housing liner (front) .

– Take electrical connector -3- out of bracket and push to the side.
– Unplug electrical connector -2- on left electrohydraulic engine mounting solenoid valve - N144- and move clear.
– Remove bolts for engine mounting -arrows-.
– Move retaining plate -1- for engine mounting clear to the side.
– Detach engine mounting.

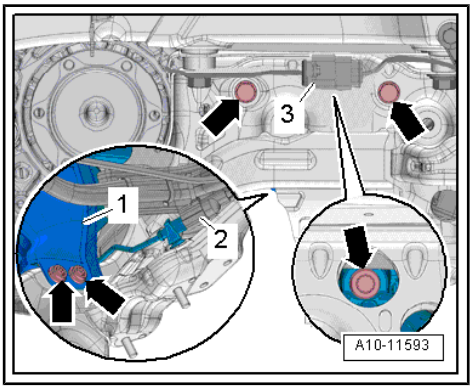

Installing

Installation is carried out in the reverse order; note the following:

Note

Renew the bolts tightened with specified tightening angle.

Tightening torques

- ⇒ “2.1 Exploded view - assembly mountings”, page 42
- ⇒ General body repairs, exterior; Rep. gr. 66 ; Wheel housing liner; Exploded view - wheel housing liner (front)
- ⇒ General body repairs, exterior; Rep. gr. 66 ; Noise insulation; Exploded view - noise insulation

2.4 Removing and installing torque reaction support and cross member

Removing

– Remove noise insulation (front) ⇒ General body repairs, exterior; Rep. gr. 66 ; Noise insulation; Removing and installing noise insulation .
– Release hose clips -1 and 2- and remove air hose.

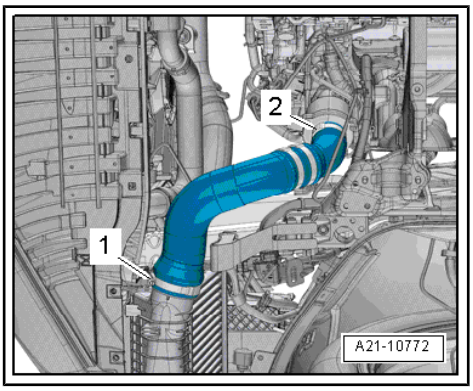

– Unscrew bolts -arrows- and remove torque reaction support -1-.

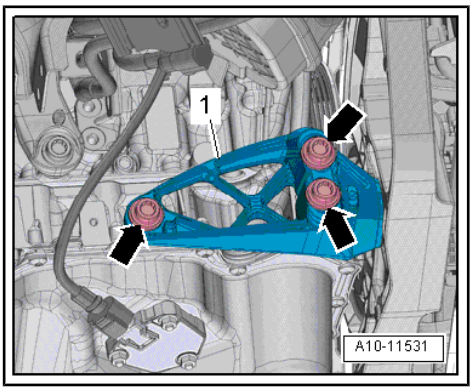

– Unplug electrical connector -1-.
– Press release tabs and disconnect secondary air hoses -2-.

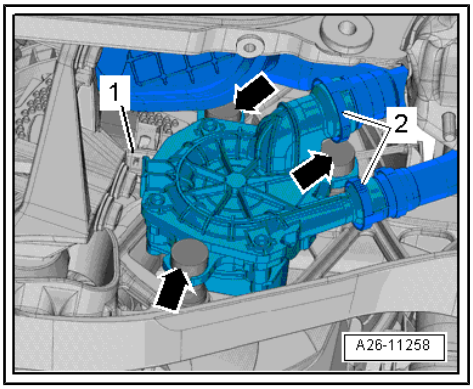

Note

Disregard -arrows-.

– Remove bolts -1- and detach underbody guard towards front -arrow-.

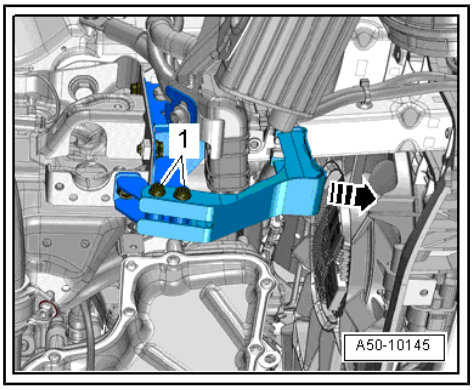

– Remove bolts -arrows- on both sides and detach cross member -1- for torque reaction support.

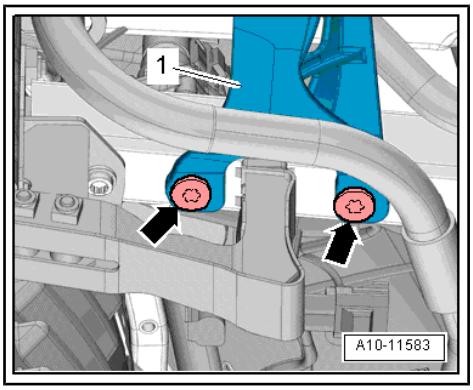

Installing

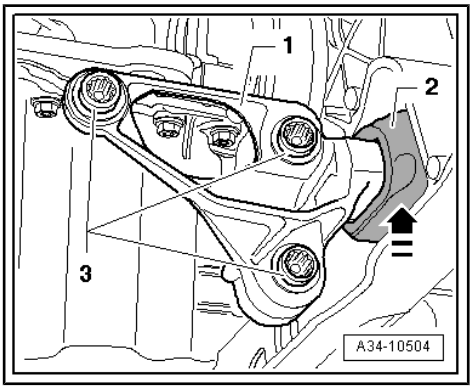

Note

Fit new O-rings.

– Note installation position and marking of buffer stop.

– Push torque reaction support -1- upwards -arrow- until it makes contact with cross member.

• The buffer stop -2- must be free of stress and must lie against the cross member without play.

– Tighten bolts -3- in this position.

The remaining installation steps are carried out in the reverse sequence.

Tightening torques

♦ ⇒ “2.1 Exploded view - assembly mountings”, page 42

♦ ⇒ “2.2 Exploded view - hose connections for charge air system”, page 240

♦ Underbody guard ⇒ General body repairs, exterior; Rep. gr. 50 ; Lock carrier; Exploded view - lock carrier

♦ ⇒ General body repairs, exterior; Rep. gr. 66 ; Noise insulation; Exploded view - noise insulation

2.5 Removing and installing gearbox mounting

⇒ “2.5.1 Removing and installing gearbox mounting (left-side)”, page 49

⇒ “2.5.2 Removing and installing gearbox mounting (right-side)”, page 51

⇒ “2.5.3 Removing and installing gearbox support with gearbox mounting (rear)”, page 52

⇒ “2.5.4 Removing and installing gearbox mounting (rear)”, page 53

2.5.1 Removing and installing gearbox mounting (left-side)

Removing

– Remove rear section of front wheel housing liner (left-side) ⇒ General body repairs, exterior; Rep. gr. 66 ; Wheel housing liner; Removing and installing wheel housing liner (front) .

– Remove noise insulation (rear) ⇒ General body repairs, exterior; Rep. gr. 66 ; Noise insulation; Removing and installing noise insulation .

– Remove bolts -arrows-.

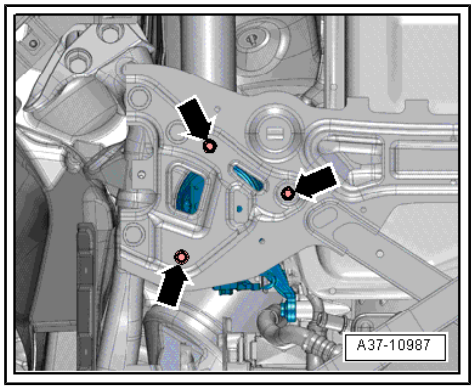

– Unplug electrical connector -2- for gearbox mounting valve 2 - N263- .

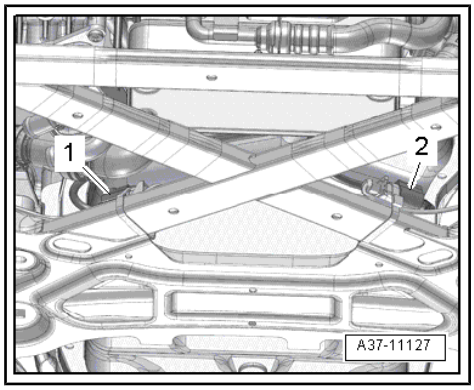

Note

Disregard -item 1-.

– Unscrew bolt -3- and remove strut.

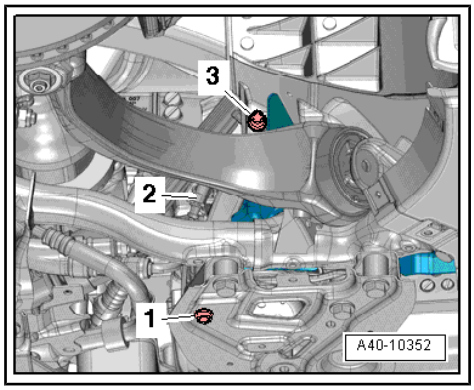

Note

Disregard -items 1, 2-.

– Unplug electrical connector -1-.

– Remove bolts -arrows- and push coolant pump to one side.

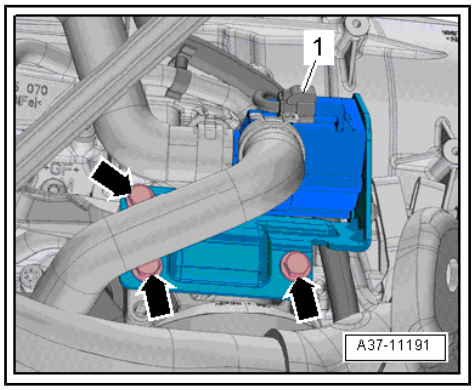

– Remove bolts -arrows- and detach gearbox mounting (left-side) with gearbox support.

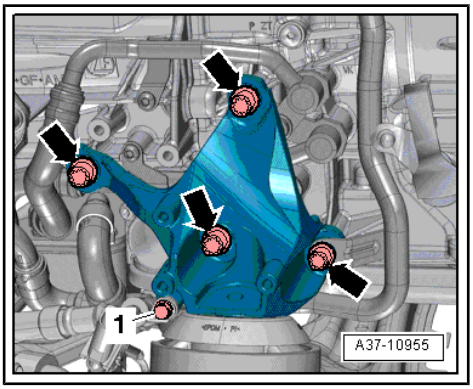

Note

Disregard -item 1-.

– Remove bolt -arrow- and detach gearbox mounting (left-side) from gearbox support.

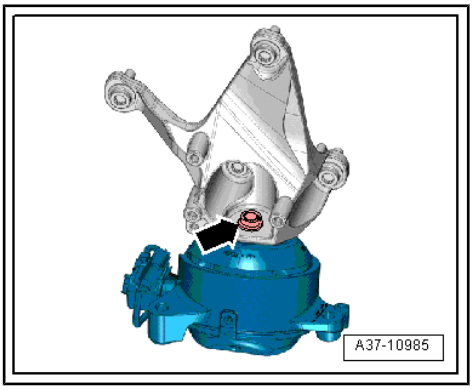

Installing

Install in reverse order.

Tightening torques

- ⇒ Rep. gr. 37 ; Assembly mountings; Exploded view - assembly mountings
- ⇒ General body repairs, exterior; Rep. gr. 66 ; Noise insulation; Exploded view - noise insulation
- ⇒ General body repairs, exterior; Rep. gr. 66 ; Wheel housing liner; Exploded view - wheel housing liner (front)

2.5.2 Removing and installing gearbox mounting (right-side)

Removing

– Remove rear section of front wheel housing liner (right-side) ⇒ General body repairs, exterior; Rep. gr. 66 ; Wheel housing liner; Removing and installing wheel housing liner (front) .

– Remove subframe cross brace ⇒ Running gear, axles, steering; Rep. gr. 40 ; Subframe; Removing and installing subframe cross brace .

Caution

Risk of damage to running gear components.

- ***The vehicle must NOT be lowered onto its wheels if the engine/gearbox mountings, steering rack or subframe cross brace are not properly installed.***

– Unplug electrical connector -1- for gearbox mounting valve 1 - N262-.

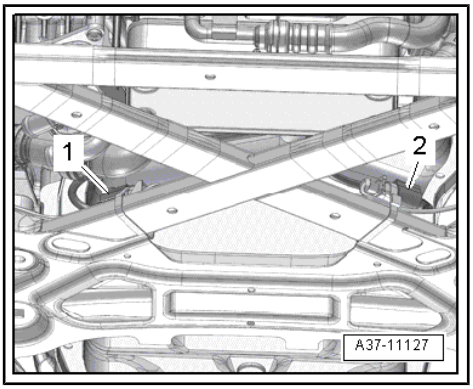

Note

Disregard -item 2-.

– Unscrew bolt -2- and remove strut.

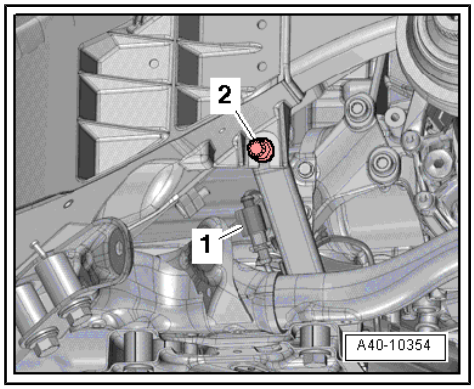

Note

Disregard -item 1-.

– Remove bolts -arrows- and detach heat shield -1-.

– Remove bolt -2- and detach gearbox mounting from gearbox support.

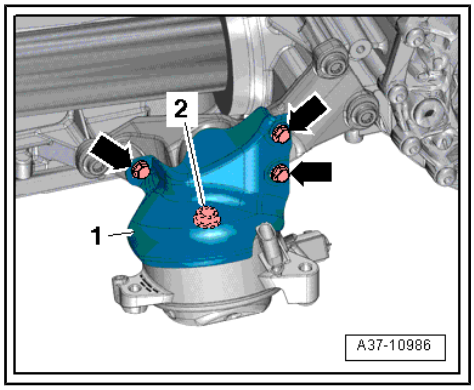

Installing

Install in reverse order.

Tightening torques

- ⇒ Rep. gr. 37 ; Assembly mountings; Exploded view - assembly mountings
- Subframe cross brace ⇒ Running gear, axles, steering; Rep. gr. 40 ; Subframe; Exploded view - subframe
- ⇒ General body repairs, exterior; Rep. gr. 66 ; Wheel housing liner; Exploded view - wheel housing liner (front)

2.5.3 Removing and installing gearbox support with gearbox mounting (rear)

Removing

– Remove tunnel cross-piece ⇒ Rep. gr. 37 ; Assembly mountings; Exploded view - assembly mountings .

– Remove bolts -arrows- and detach gearbox support and gearbox mounting from gearbox.

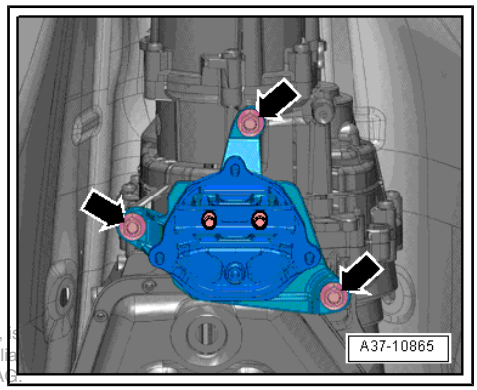

Installing

Install in reverse order.

Tightening torques

- ⇒ Rep. gr. 37 ; Assembly mountings; Exploded view - assembly mountings

2.5.4 Removing and installing gearbox mounting (rear)

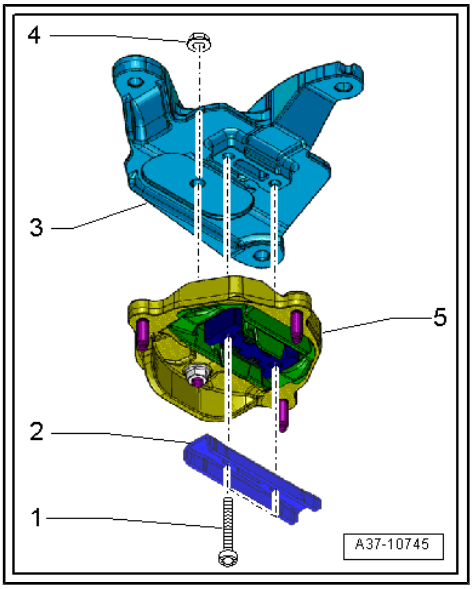

Removing

– Remove gearbox support with gearbox mounting (rear) ⇒ page 52 .

– Unscrew bolts -1- and detach stop (bottom) -2- for gearbox mounting.

– Remove nut -4- and detach gearbox mounting -5- from gearbox support.

Installing

– Position gearbox support -3- on gearbox mounting -5-.

– Hand-tighten nut -4-.

– Secure stop (bottom) -2- with bolts -1-.

– Tighten nut -4-.

– Install gearbox support with gearbox mounting (rear) ⇒ page 52 .

Tightening torques

♦ ⇒ Rep. gr. 37 ; Assembly mountings; Exploded view - assembly mountings

3 Engine cover panel

⇒ “3.1 Removing and installing engine cover panel”, page 54

3.1 Removing and installing engine cover panel

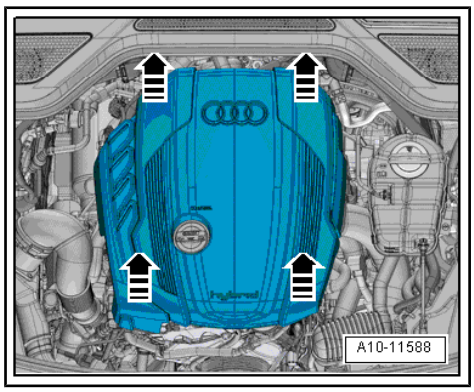

Removing

– Carefully remove engine cover panel -arrows-.

Installing

– To avoid damage, do not strike the engine cover panel with your fist or with any kind of tool.

– Observe oil filler neck when positioning engine cover panel.

– First press engine cover panel with both hands onto the ball studs at the rear and then onto the ball studs at the front.

13 – Crankshaft group

1 Cylinder block (pulley end)

⇒ "1.1 Exploded view - cylinder block (pulley end)", page 55

⇒ "1.2 Removing and installing vibration damper", page 56

⇒ "1.3 Removing and installing bracket for ancillaries", page 62

1.1 Exploded view - cylinder block (pulley end)

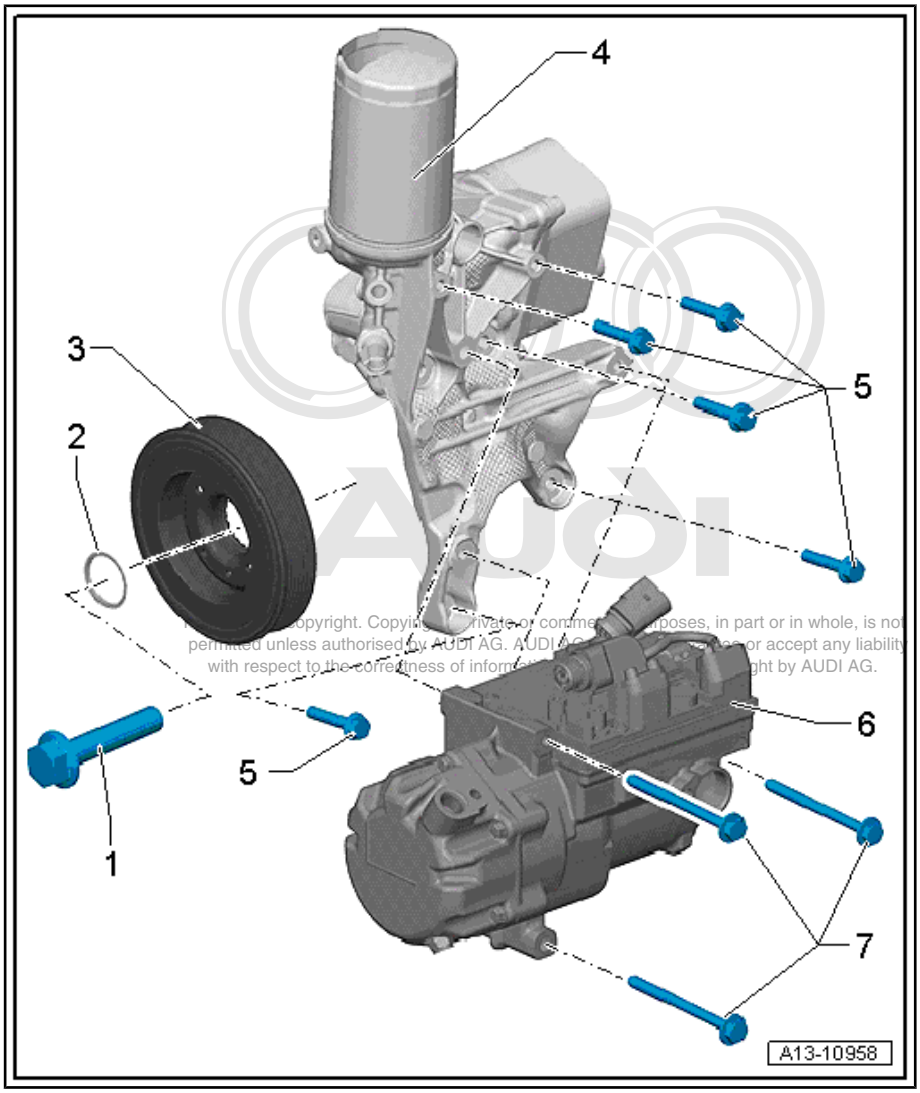

1 - Bolt

- ❑ Renew
- ❑ Lubricate O-ring with oil
- ❑ Use counterhold tool - T10355- when loosening and tightening
- ❑ 150 Nm + turn 90° further

2 - O-ring

- ❑ Not available as replacement part; supplied together with bolt

3 - Vibration damper

- ❑ Removing and installing ⇒ page 56

4 - Bracket for ancillaries

- ❑ With oil filter and engine oil cooler
- ❑ Removing and installing bracket for ancillaries ⇒ page 62
- ❑ Removing and installing engine oil cooler ⇒ page 173

5 - Bolts for bracket for ancillaries

- ❑ Renew
- ❑ Tightening sequence ⇒ page 56

6 - Electrical air conditioner compressor - V470-

- ❑ Removing and installing ⇒ Heating, air conditioning; Rep. gr. 87 ; Air conditioner compressor; Detaching and attaching air conditioner compressor at bracket

7 - Bolts for electrical air conditioner compressor - V470-

- ❑ Note different bolt lengths and versions
- ❑ Tightening torque ⇒ Heating, air conditioning; Rep. gr. 87 ; Air conditioner compressor; Exploded view - air conditioner compressor drive unit

Tightening sequence on bracket for ancillaries

– Fit bracket for ancillaries (first tighten bolt -4-).
– Tighten bolts in the sequence -1 ... 5- in 3 stages as follows:

1. Tighten bolts hand tight.
2. Tighten bolts to 20 Nm.
3. Turn bolts 90° further.

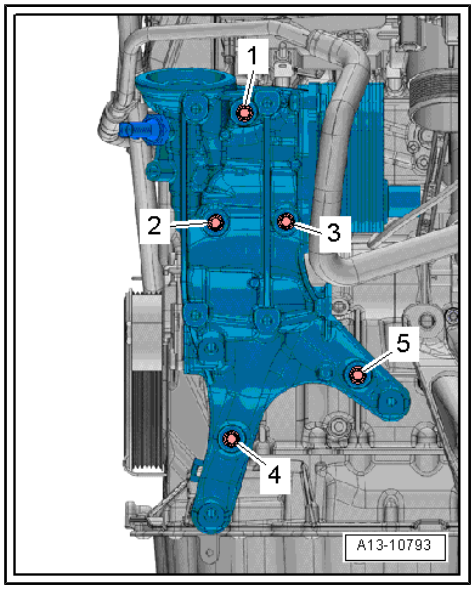

1.2 Removing and installing vibration damper

Special tools and workshop equipment required

♦ Counterhold tool - T10355-

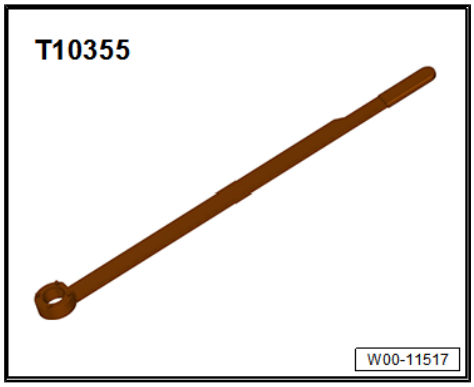

♦ Assembly tool - T10531-

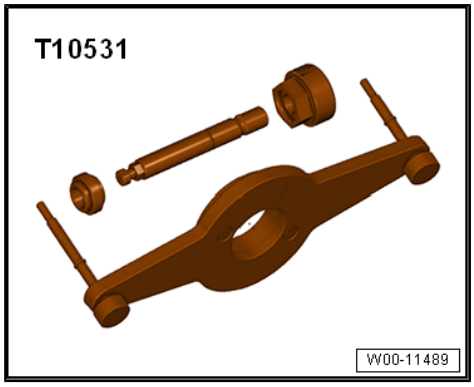

Components of assembly tool - T10531- :

♦ Support - T10531/1-
♦ Clamping pin - T10531/2-
♦ Turning-over tool - T10531/3-
♦ Flange nut - T10531/4-

Note

The securing bolt for the vibration damper -A- secures the vibration damper -1-, timing chain sprocket -2- and crankshaft -3- to each other. Before removing the securing bolt, the timing chain sprocket must be secured to the crankshaft as described below.

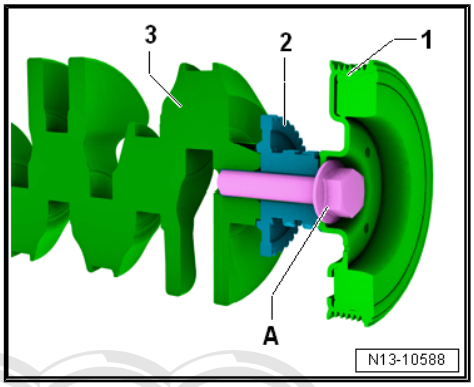

Removing

– Remove engine cover panel ⇒ page 54 .

– Turn vibration damper to “TDC” position using counterhold tool - T10355- .

- Notch on vibration damper must align with arrow marking on timing chain cover (bottom) -arrow-.
- Marking on cover must be in »4 o'clock position«.

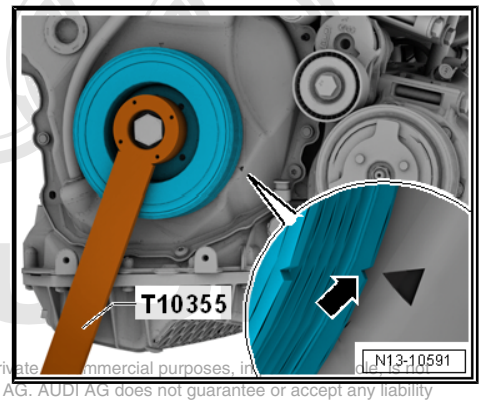

Caution

Do not loosen securing bolt for vibration damper by more than a half turn at this stage.

– Loosen bolt for vibration damper by approx. a half turn using counterhold tool - T10355- .

– If vibration damper has been twisted out of position, correct TDC position.

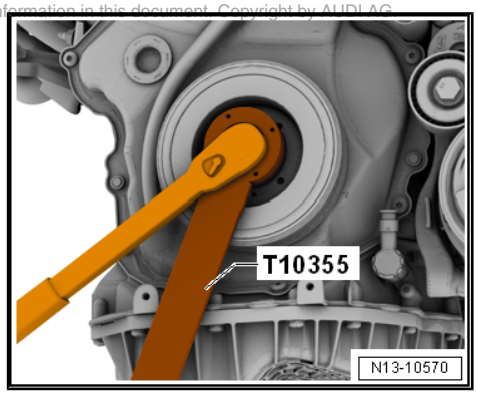

– Remove bolts -arrows- (as illustrated) from timing chain cover. These bolts must be renewed.

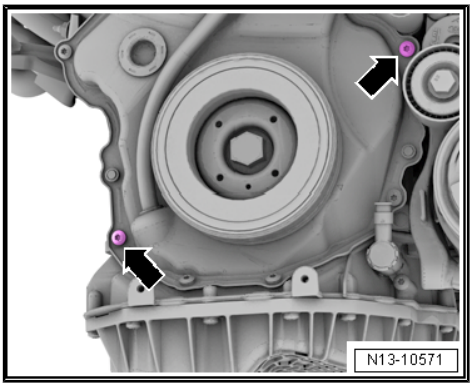

– Apply support - T10531/1- (as illustrated) to vibration damper and secure hand-tight with knurled screws -arrows-.
– Remove bolt for vibration damper completely.

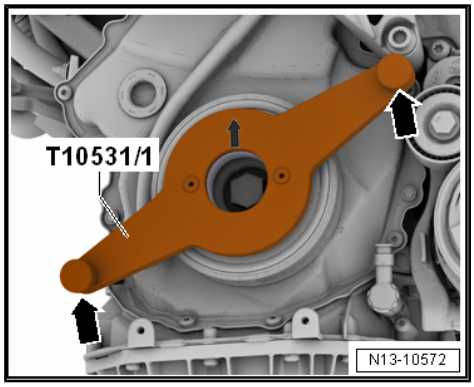

– Check whether turning-over tool -A- slides easily over clamps -B-. Turn tensioning bolt -arrow- if necessary.

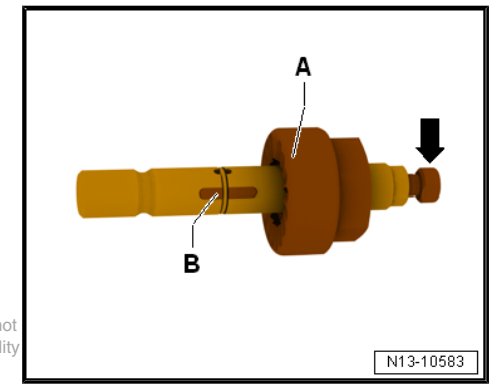

Note

Do not turn the tensioning bolt from this stage onwards; otherwise the clamping pin - T10531/2- will get stuck when it is screwed into the crankshaft.

– Screw clamping pin - T10531/2- into crankshaft and hand-tighten with open-end spanner (12 mm) -item A-.

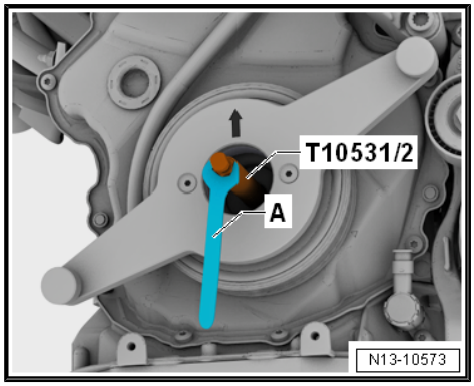

– Hand-tighten tensioning bolt -A- to secure chain sprocket to crankshaft.

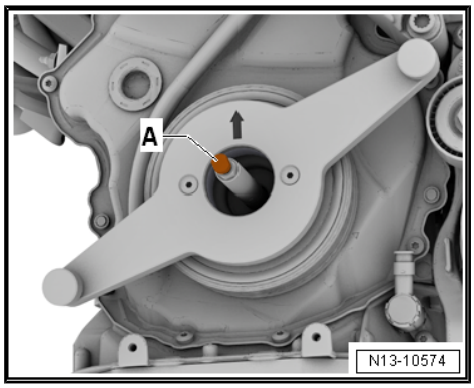

– Remove knurled screws -arrows-. Detach support - T10531/1- and vibration damper -A-.

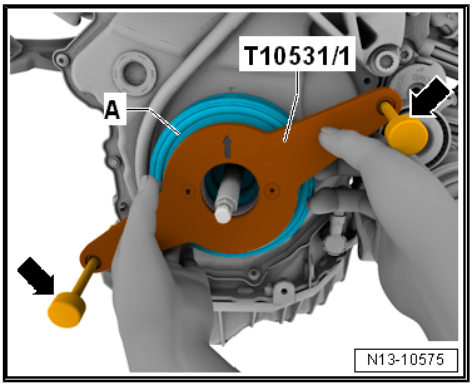

If crankshaft needs to be rotated without vibration damper:

– Fit turning-over tool -A- onto clamping pin (pay attention to tooth-shaped profile on chain sprocket). In TDC position, flat surface of tool faces upwards.

– Tighten turning-over tool with flange nut -B-.

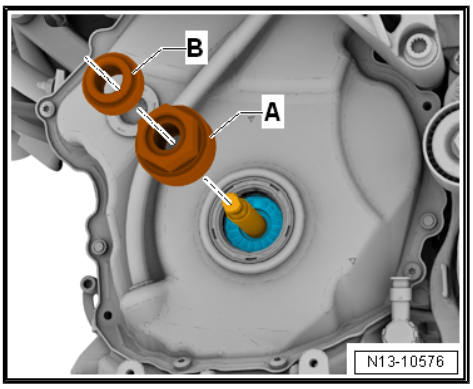

– Crankshaft can now be rotated at hexagon flats -arrow-.

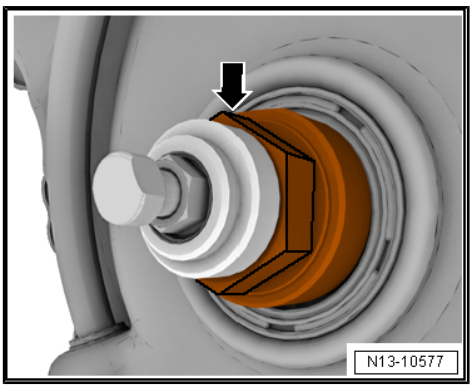

Installing

– If necessary, detach flange nut -B- and turning-over tool -A- from clamping pin.

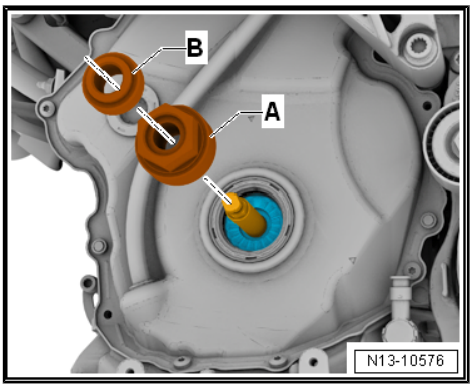

– Fit vibration damper in TDC position (pay attention to tooth-shaped profile -arrow- on chain sprocket).

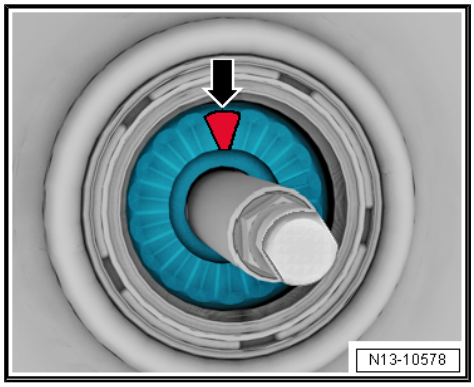

– Fit turning-over tool -A- onto clamping pin so that hexagon flats face towards vibration damper.
– Screw flange nut -B- on while moving vibration damper back and forth slightly to check whether vibration damper is seated correctly in tooth-shaped profile. Tighten flange nut until vibration damper can no longer be rotated.

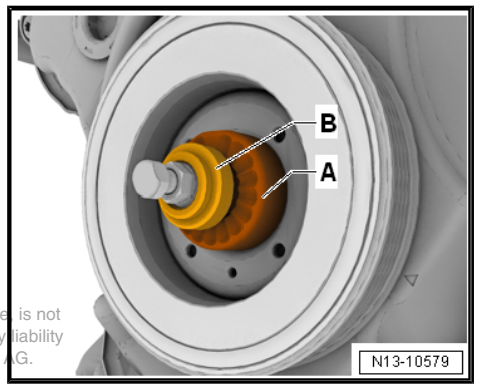

– Apply support - T10531/1- (as illustrated) to vibration damper and secure hand-tight with knurled screws -arrows-.

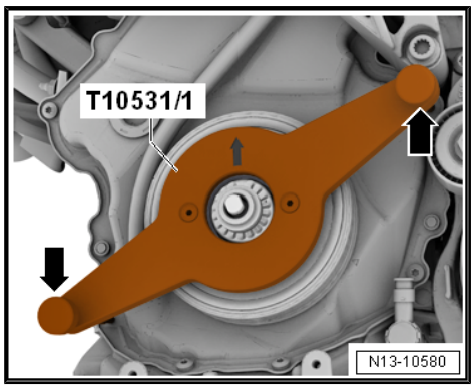

– Unscrew flange nut -A- and loosen tensioning bolt -B-.
– Unscrew clamping pin and remove with turning-over tool .

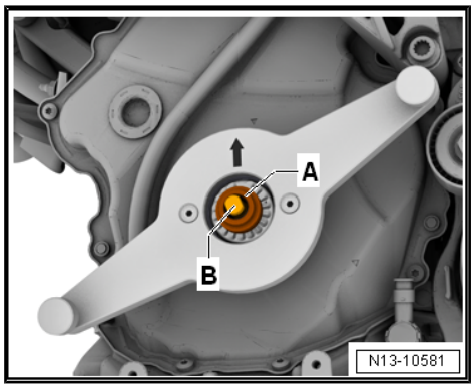

– Screw in new bolt for vibration damper with lubricated O-ring -1- hand-tight.

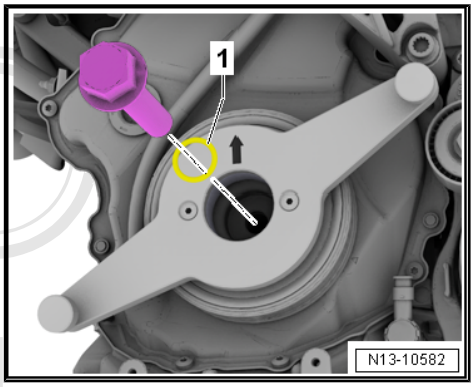

– Remove knurled screws -arrows- and detach support - T10531/1- .

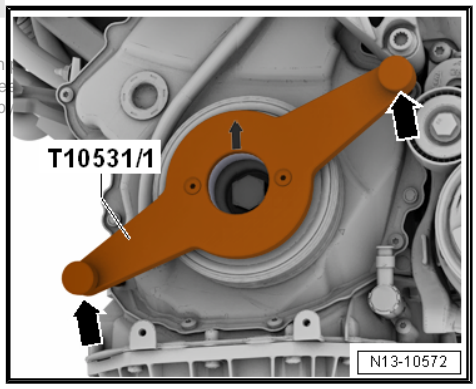

– Tighten bolt for vibration damper using counterhold tool - T10355- .

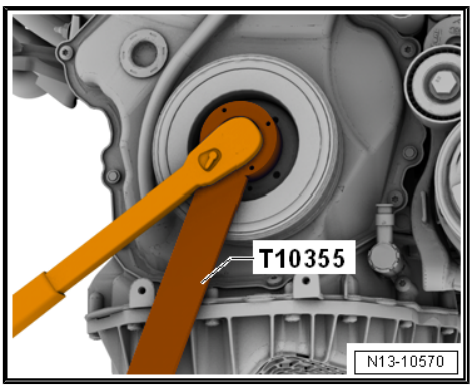

– Screw in new securing bolts -arrows-.

Tightening torques

- ⇒ “1.1 Exploded view - cylinder block (pulley end)”, page 55
- ⇒ “1.1 Exploded view - timing chain cover”, page 94

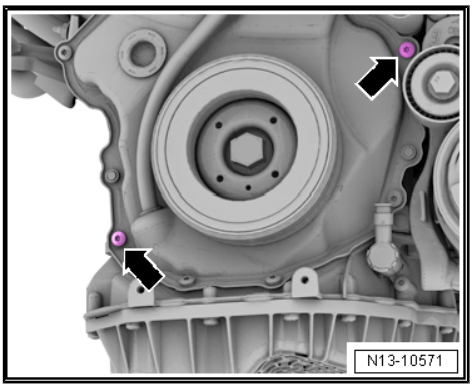

1.3 Removing and installing bracket for ancillaries

Note

For all work on vehicles with high-voltage system, note additional warnings for working on such vehicles ⇒ page 2 and ⇒ Electrical system, hybrid; Rep. gr. 93 ; General warning instructions for work on the high-voltage system .

WARNING

Safety hazard: the engine can start unexpectedly.

Before carrying out general work on a vehicle with high-voltage electrical system, switch off the ignition and remove the ignition key from the vehicle.

WARNING

Working on vehicles with high-voltage wiring:

- ***Do not support yourself or tools on high-voltage wiring or associated components --> this can damage the insulation.***
- ***High-voltage wiring must not be excessively bent or kinked --> this can damage the insulation.***
- ***The round high-voltage connectors are colour-coded with an external coloured ring and are provided with mechanical coding or guide lugs. It is important to observe this coding when joining up the round high-voltage connectors, otherwise the connectors can be damaged.***

DANGER!

Risk of fatal injury if high-voltage components are damaged.

Observe the following when working in the vicinity of high-voltage components or wiring:

- *It is not permitted to use cutting or forming tools, other sharp-edged tools or heat sources such as welding, brazing, soldering, hot air or thermal bonding equipment.*
- *Before starting work, visually inspect the high-voltage components in the areas involved.*
- *Before working in the engine compartment, visually inspect the power and control electronics for electric drive - JX1- , electric drive motor - V141- , air conditioner compressor - V470- and high-voltage wiring.*
- *Before working on the vehicle underbody, visually inspect the high-voltage wiring and covers.*
- *Before working on the rear section of the vehicle, visually inspect the high-voltage wiring and the electro-box with the maintenance connector for high-voltage system - TW - .*
- *Visually inspect all potential equalisation lines.*

Check the following when making the visual inspection:

- *There must be no external damage on any component.*
- *The insulation of the high-voltage wiring and potential equalisation lines must not be damaged.*
- *There must be no unusual deformation of the high-voltage wiring.*
- *All high-voltage components must be identified by a red warning sticker.*

Removing

– Remove engine cover panel ⇒ page 54 .

– Drain coolant ⇒ page 184 .

Note

Place a cloth underneath bracket for ancillaries to catch any escaping oil.

– Unplug electrical connectors -1 and 2- at oil pressure switch - F22- and oil pressure switch for reduced oil pressure - F378- .

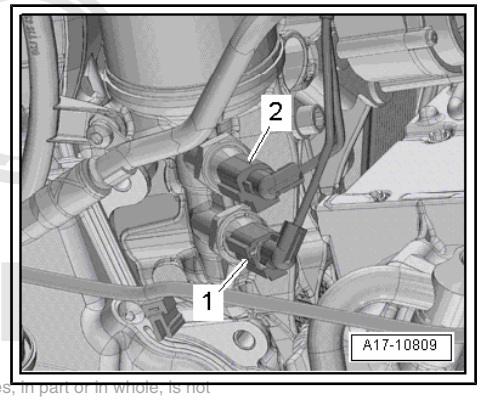

Note

- *Illustration shows vehicle without hybrid drive.*
- *Disregard -items 1, 4-.*

DANGER!

High voltage can cause fatal injury.

Danger of severe or fatal injuries from electric shock.

- ***The high-voltage system may only be de-energised by a suitably qualified person (Audi high-voltage technician).***
- ***It must be definitely confirmed that the high-voltage system is de-energised. The system may only be de-energised using the vehicle diagnostic tester via "Guided Fault Finding".***
- ***The qualified person (Audi high-voltage technician) confirms that the system is de-energised and uses the locking cap - T40262- to ensure that the system cannot be re-energised. The ignition key and the maintenance connector for high-voltage system - TW - are then stored in a safe place by the qualified person.***
- ***The qualified person (Audi high-voltage technician) marks the vehicle by attaching the appropriate warning signs.***

Note

- *De-energising high-voltage system:*
- *Connect vehicle diagnostic tester*
- *Select* `Guided Fault Finding` *mode*
- *Using the* `Go To` *button, select the following menu options in succession:*
- `Selecting function/component`
- `Body`
- `Electrical system`
- `Self-diagnosis compatible systems`
- `8C - Hybrid battery management -J840`
- `8C - Hybrid battery management, functions`
- `51 - De-energise high-voltage system (Rep. gr. 93)`

– Remove electrical air conditioner compressor -V470- from bracket for ancillaries and tie up to left side ⇒ Heating, air conditioning; Rep. gr. 87 ; Air conditioner compressor; Detaching and attaching air conditioner compressor at bracket .

WARNING

Risk of injury caused by refrigerant.

- *The air conditioner refrigerant circuit must not be opened.*

Caution

Danger of damage to refrigerant lines and hoses.

- *Do NOT stretch, kink or bend refrigerant lines and hoses.*

– Unplug electrical connector -1-.

– Remove bolts -arrows- and press continued coolant circulation pump - V51- to side.

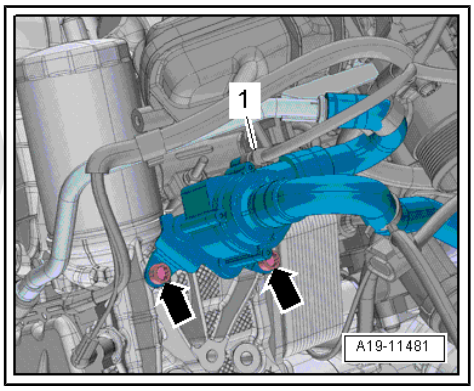

– Lift retaining clips -1, 2- and disconnect coolant hoses.

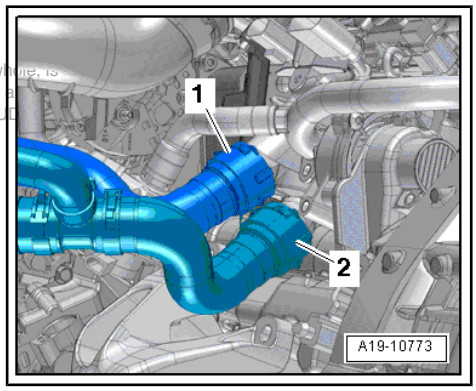

– Remove bolts -1- and -2- and press coolant pipe (front) to side.

Note

Disregard -arrows-.

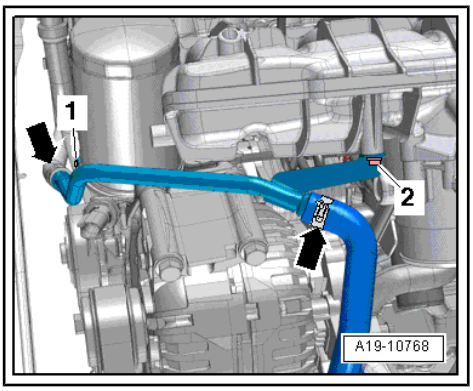

– Remove oil filter -arrow- ⇒ Maintenance ; Booklet 410 .

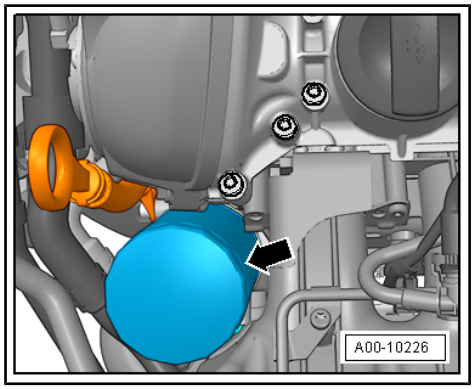

– Remove bolt -top arrow- for dipstick guide tube.

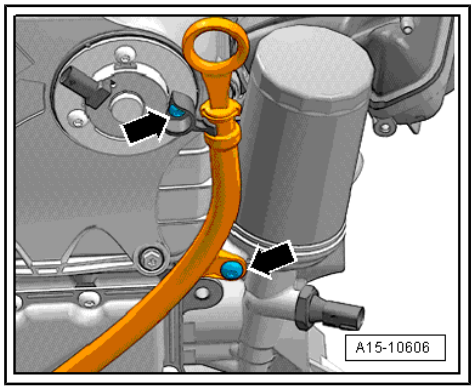

Note

Disregard -bottom arrow-.

– Unscrew bolts -1 ... 5- and detach bracket for ancillaries from coolant pump housing.

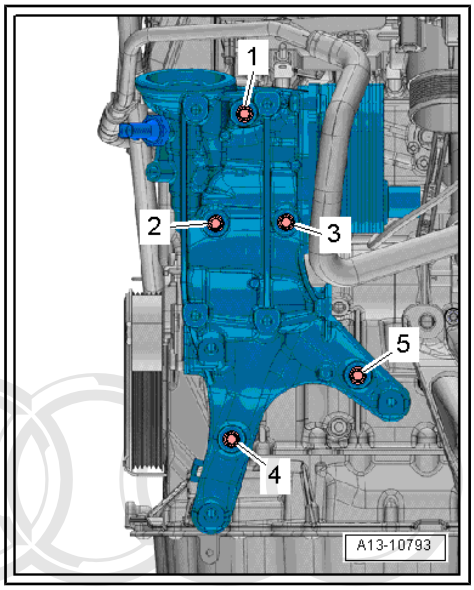

Installing

Installation is carried out in the reverse order; note the following:

Note

- *Renew the bolts tightened with specified tightening angle.*
- *Renew O-rings and gaskets.*

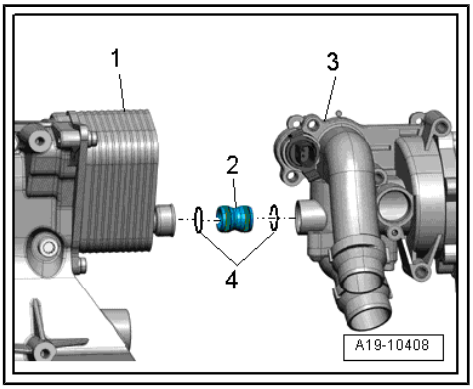

– Lubricate O-rings -4- with coolant additive, for coolant additive refer to ⇒ Electronic parts catalogue .
– Insert connection -2- into coolant pump housing -3-.
– Push bracket for ancillaries -1- onto connection, fit bolts and tighten ⇒ page 56 .

WARNING

Risk of injury caused by refrigerant.

- *The air conditioner refrigerant circuit must not be opened.*

Caution

Danger of damage to refrigerant lines and hoses.

- *Do NOT stretch, kink or bend refrigerant lines and hoses.*

– Install air conditioner compressor ⇒ Heating, air conditioning; Rep. gr. 87 ; Air conditioner compressor; Detaching and attaching air conditioner compressor at bracket .
– Install oil filter ⇒ Maintenance ; Booklet 410 .

Note

Do not reuse coolant.

– Connect coolant hoses with plug-in connector ⇒ page 218 .
– Fill up with coolant ⇒ page 186 .
– Check oil level ⇒ Maintenance ; Booklet 410 .

Re-energising the high-voltage system

DANGER!

High voltage can cause fatal injury.

Danger of severe or fatal injuries from electric shock.

- *The high-voltage system may only be re-energised by a suitably qualified person (Audi high-voltage technician).*
- *The system may only be re-energised using the vehicle diagnostic tester via "Guided Fault Finding".*
- *The vehicle is then made ready for operation again by the qualified person (Audi high-voltage technician).*
- *The qualified person (Audi high-voltage technician) marks the vehicle by attaching the appropriate warning signs.*

Note

- *Re-energising high-voltage system:*
- *Connect vehicle diagnostic tester*
- *Select* `Guided Fault Finding` *mode*
- *Using the* `Go To` *button, select the following menu options in succession:*
- `Selecting function/component`
- `Body`
- `Electrical system`
- `Self-diagnosis compatible systems`
- `8C - Hybrid battery management -J840`
- `8C - Hybrid battery management, functions`
- `51 - Re-energise high-voltage system (Rep. gr. 93)`

Tightening torques

- ⇒ “1.1 Exploded view - cylinder block (pulley end)”, page 55 .
- ⇒ “1.1 Exploded view - timing chain cover”, page 94 .
- ⇒ “3.1 Exploded view - coolant pipes”, page 213 .

2 Cylinder block (gearbox end)

⇒ "2.1 Exploded view - cylinder block (gearbox end)", page 69

⇒ "2.2 Removing and installing drive plate", page 70

⇒ "2.3 Removing and installing sealing flange (gearbox end)", page 71

2.1 Exploded view - cylinder block (gearbox end)

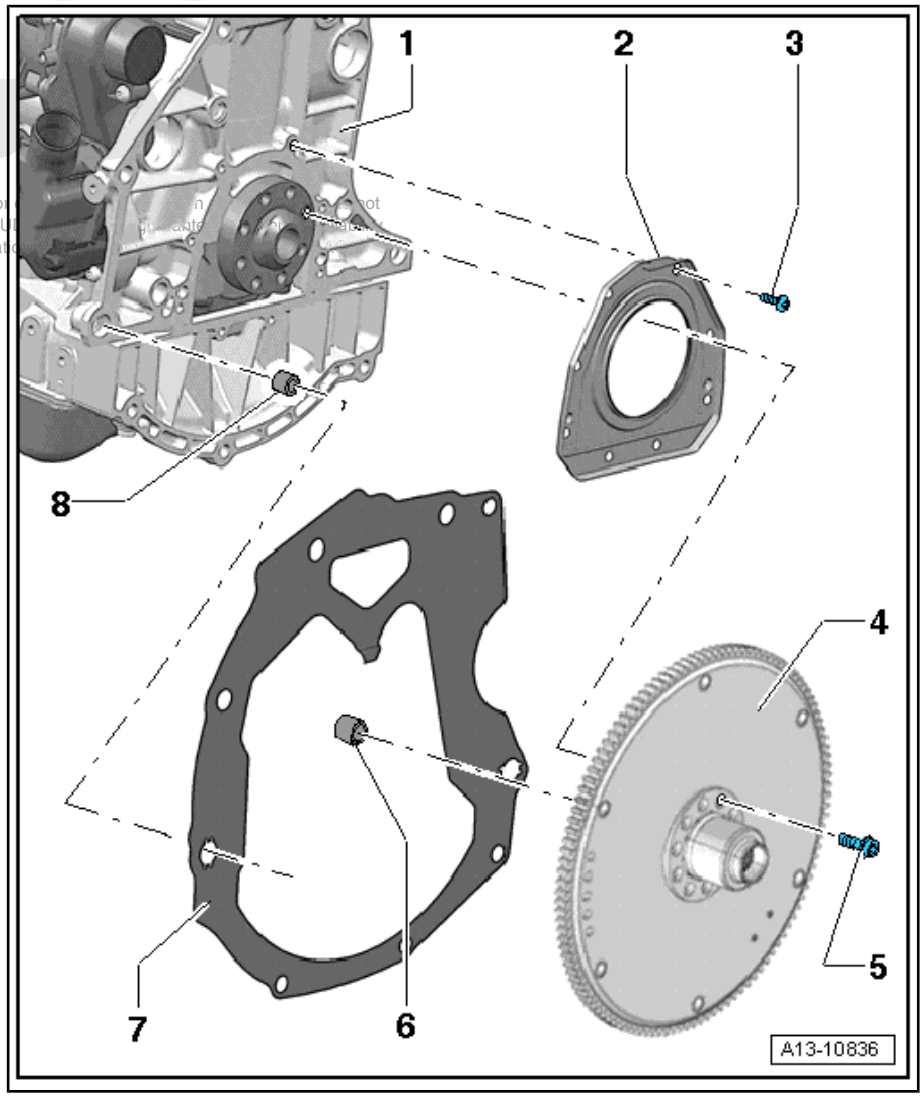

1 - Cylinder block

2 - Sealing flange with oil seal

- ❑ Removing and installing ⇒ page 71
- ❑ Renew only as complete unit
- ❑ Do not lubricate/grease sealing lip of oil seal
- ❑ Use support sleeve supplied when fitting
- ❑ Before installing, remove oil residue from crankshaft journal with a clean cloth

3 - Bolt

- ❑ Tightening sequence with 8 bolts ⇒ page 70
- ❑ Tightening sequence with 6 bolts ⇒ page 70

4 - Drive plate

- ❑ Lock with counterhold tool -3067- to loosen securing bolts

5 - Bolt

- ❑ 60 Nm + 90°
- ❑ Renew

6 - Not fitted

7 - Intermediate plate

- ❑ Must be positioned on dowel sleeves
- ❑ Do not damage/bend when assembling
- ❑ Is fitted onto sealing flange ⇒ page 70

8 - Dowel sleeve

Sealing flange (gearbox end) - tightening sequence with 8 bolts

– Tighten bolts -1 to 8- in the sequence shown:
– 1. Screw in bolts finger-tight.
– 2. Tighten bolts to 9 Nm.

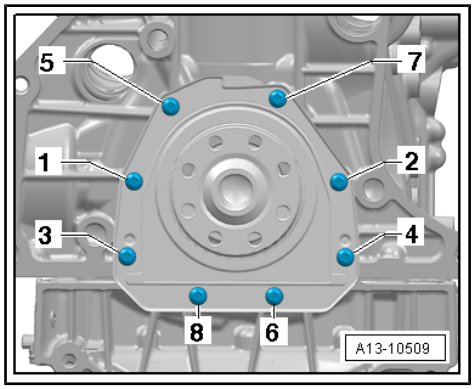

Sealing flange (gearbox end) - tightening sequence with 6 bolts

– Tighten new bolts -1 to 6- in the sequence shown:
– 1. Screw in bolts finger-tight.
– 2. Tighten bolts to 4 Nm + 45° further.

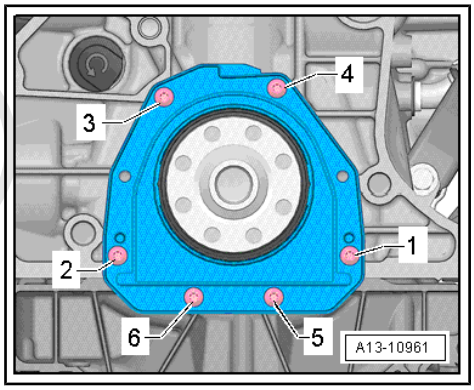

Note

Only 6 bolts are fitted; 2 bolt holes remain free.

Installing intermediate plate

– Fit intermediate plate on sealing flange and push onto dowel sleeves -arrows-.

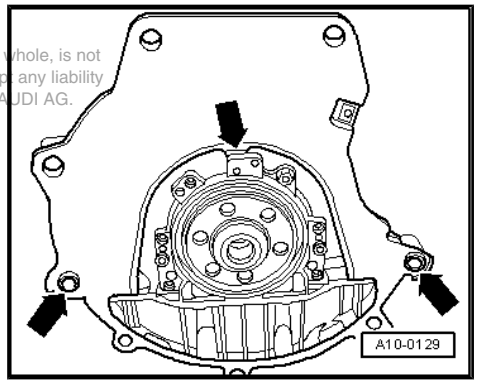

2.2 Removing and installing drive plate

Special tools and workshop equipment required

♦ Counterhold tool - 10 - 201-

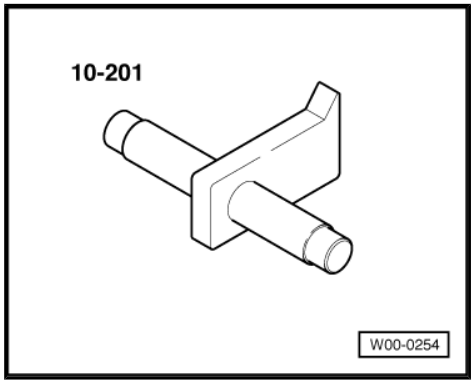

Removing

- Gearbox removed.

– Insert counterhold tool - 10 - 201- to slacken bolts.

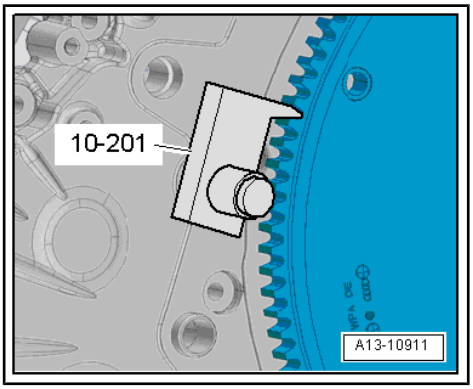

> **Caution**
>
> *Take care not to damage outer surface of bearing flange on drive plate.*
>
> ♦ *Use a multi-point socket bit with a length of at least 40 mm to slacken and tighten the drive plate bolts.*

– Remove bolts and take off drive plate and sender wheel.

Installing

Installation is carried out in the reverse order; note the following:

> **Note**
>
> *Renew bolts for drive plate.*

– Pay attention to dowel pin when installing drive plate.

– Fit counterhold tool - 10 - 201- the other way round to tighten bolts.

Tightening torques

♦ ⇒ “2.1 Exploded view - cylinder block (gearbox end)”, page 69

2.3 Removing and installing sealing flange (gearbox end)

Special tools and workshop equipment required

♦ Guide sleeve - T20097-

♦ Electric drill with plastic brush attachment

♦ Safety goggles

♦ Sealant ⇒ Electronic parts catalogue

Removing

- Gearbox removed.

– Remove drive plate ⇒ page 70 .

– Detach intermediate plate at sealing flange and dowel sleeves -arrows-.

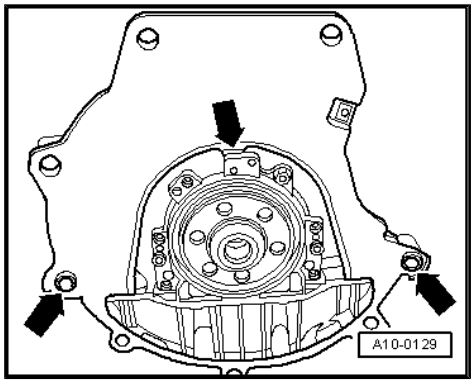

– Remove bolts -1 ... 8-.

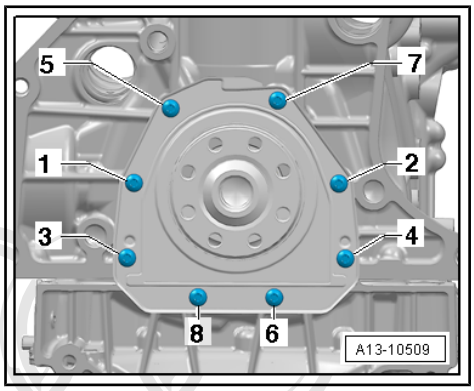

Note

Some versions have only 6 bolts.

– Remove sealing flange (gearbox end).

Installing

♦ Silicone sealant ⇒ Electronic parts catalogue

Note

♦ *Note expiry date of silicone sealant.*

♦ *The sealing flange must be installed within 5 minutes of applying the silicone sealant.*

– Remove sealant remaining on cylinder block with flat scraper.

WARNING

Risk of eye injury.

♦ ***Wear safety goggles.***

– Remove sealant residue on sealing flange using rotating plastic brush or similar.

– Clean sealing surfaces; they must be free of oil and grease.

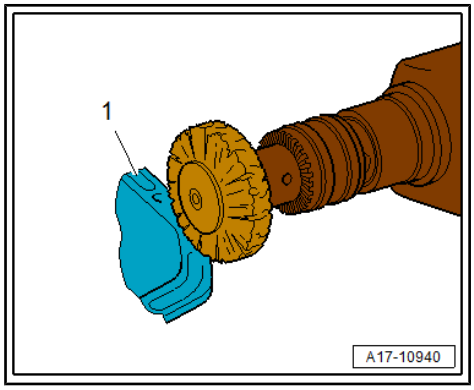

– Cut off nozzle of tube at front marking (∅ of nozzle approx. 2 mm).

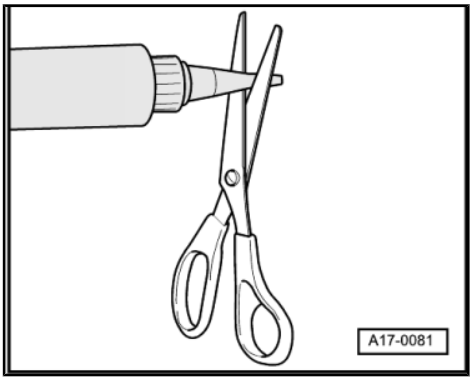

– Apply silicone sealant onto clean sealing surface of cover, as illustrated.

♦ Thickness of sealant bead: 2 ... 3 mm.

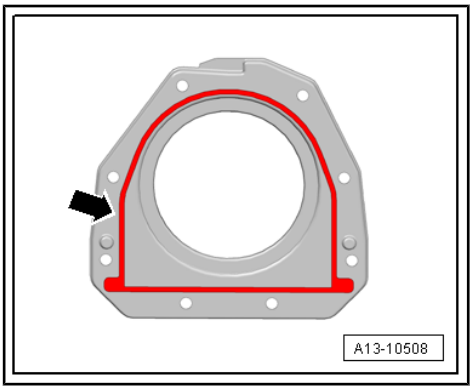

Note

♦ *The sealing flange must be installed within 5 minutes after applying the silicone sealant.*

♦ *The bead of sealant must not be thicker than specified, otherwise excess sealant can enter the sump and obstruct the strainer in the oil intake pipe.*

– Fit guide sleeve - T20097- onto crankshaft journal.

– Push sealing flange over guide sleeve - T20097- onto crankshaft journal and tighten bolts; tightening sequence:

♦ Cover with 8 bolts ⇒ page 70

♦ Cover with 6 bolts ⇒ page 70

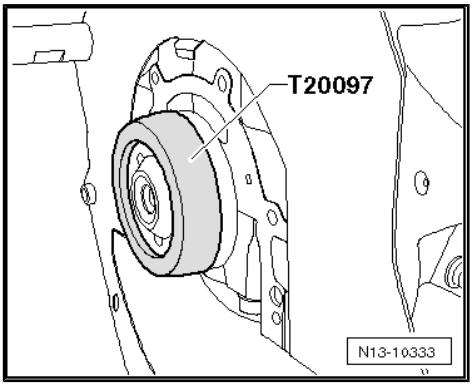

Note

After installing the sealing flange, wait about 30 minutes for the sealant to dry. Then (and only then) fill the engine with engine oil.

The remaining installation steps are carried out in the reverse sequence. Note the following points:

– Install drive plate ⇒ page 70 .

– Check oil level ⇒ Maintenance ; Booklet 410 .

Tightening torques

♦ ⇒ “2.1 Exploded view - cylinder block (gearbox end)”, page 69

3 Crankshaft

3.1 Exploded view - crankshaft

Note

Secure engine to engine and gearbox support - VAS 6095- when dismantling/assembling engine ⇒ page 32 .

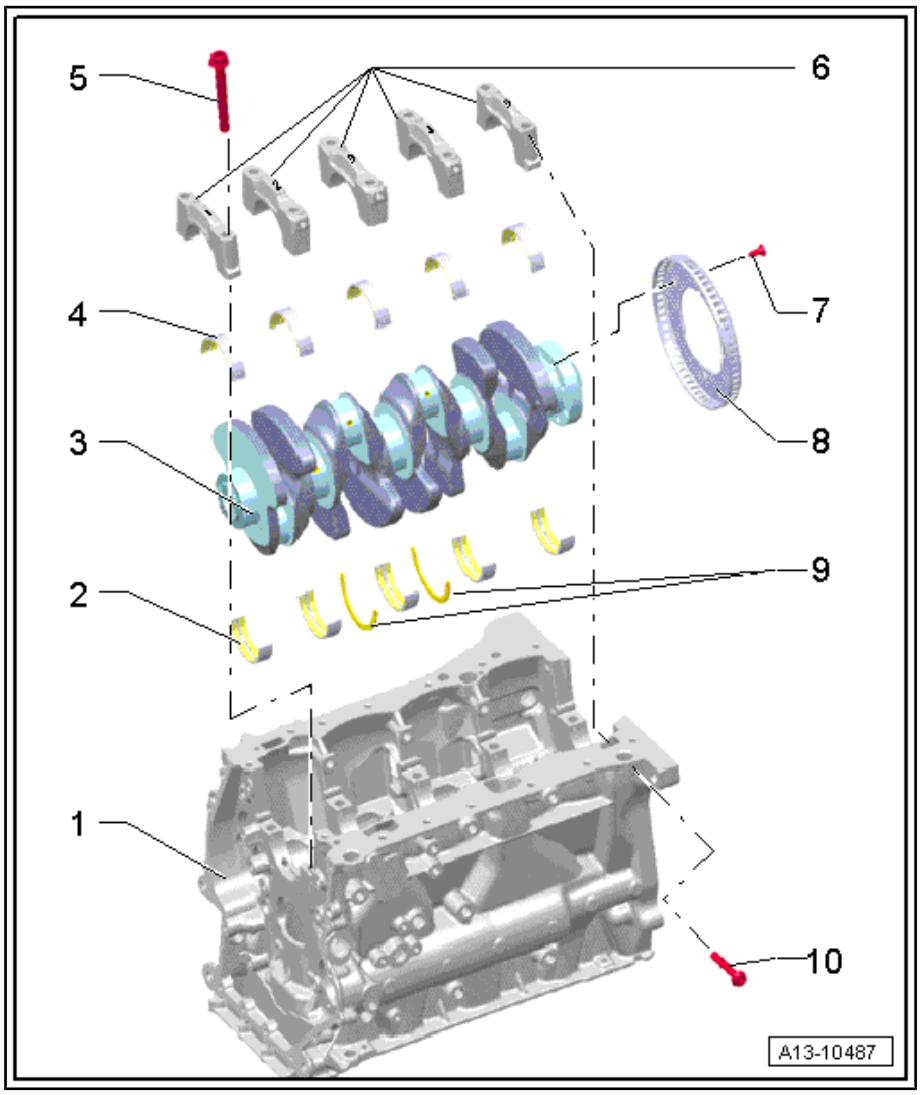

1 - Cylinder block

2 - Bearing shell for cylinder block

- With oil groove
- Renew used bearing shells
- Classification of crankshaft bearing shells ⇒ page 75

3 - Crankshaft

- After removing, place it down so that the sender wheel ⇒ Item 8 (page 75) does not become damaged
- If crankshaft is renewed, new bearing shells must be assigned to bearing caps ⇒ page 75
- Axial clearance ⇒ page 77
- Radial clearance ⇒ page 77
- Do not rotate the crankshaft when checking the radial clearance
- Crankshaft dimensions ⇒ page 75

4 - Bearing shell for bearing cap

- Without oil groove
- Renew used bearing shells
- Classification of crankshaft bearing shells ⇒ page 75

5 - Bolt

- Renew

- ❑ Use old bolts when measuring radial clearance
- ❑ Tightening sequence ⇒ page 75

6 - Bearing cap

- ❑ Bearing cap 1: Pulley end
- ❑ Bearing shell retaining lugs (cylinder block/bearing cap) must be on the same side

7 - Bolt

- ❑ Renew
- ❑ Sender wheel must be renewed if bolts are loosened ⇒ page 78
- ❑ 10 Nm + turn 90° further

8 - Sender wheel

- ❑ For engine speed sender - G28-
- ❑ Can only be installed in one position. Holes are off-set
- ❑ Sender wheel must be renewed if bolts are loosened
- ❑ Removing and installing ⇒ page 78

9 - Thrust washers

- ❑ For bearing No. 3

10 - Bolt

- ❑ Renew
- ❑ Tightening sequence ⇒ page 75

Crankshaft - tightening sequence

– Tighten crankshaft bolts in the sequence -1 ... 5- as follows:

1. Screw in bolts -1 ... 10- and -arrows A- hand-tight.
2. Initially tighten bolts -1 ... 10- to 65 Nm.
3. Turn bolts -1 ... 10- 90° further using a rigid wrench.
4. Initially tighten bolts -arrows A- to 20 Nm.
5. Turn bolts -arrows A- 90° further using a rigid wrench.

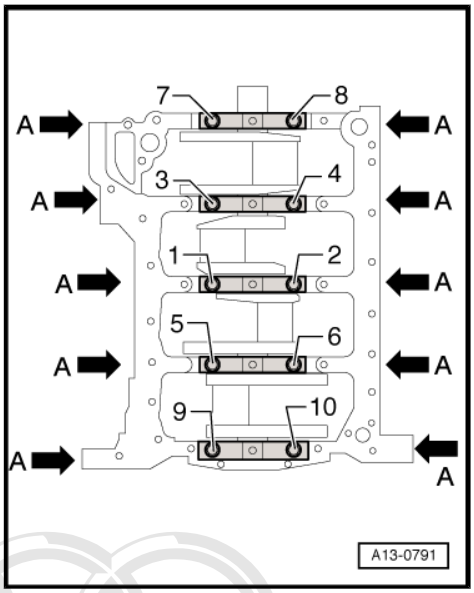

3.2 Crankshaft dimensions

(in mm)

Honing dimension [1]	Crankshaft main bearing journal ∅	Conrod bearing journal ∅
Basic dimension	58.00	47.80

[1] There is currently no provision for machining used crankshafts.

3.3 Allocation of main bearing shells

Bearing shells of the correct thickness are allocated to the cylinder block at the factory. Coloured dots are used to identify the thickness of the bearing shells.

Letter codes on lower sealing surface or end of cylinder block indicate which bearing shell is to be fitted in cylinder block (top bearing shell) at each location.

Letter codes on crankshaft indicate which bearing shell is to be fitted in bearing cap (bottom bearing shell).

The first letter stands for bearing cap 1, the second letter for bearing cap 2, etc.

Marking of bearing shell for cylinder block:

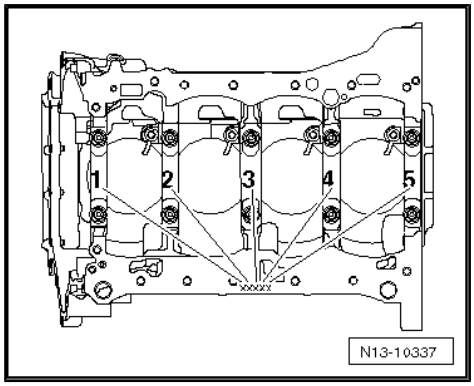

Note

Markings on cylinder block are applied either onto sealing surface for sump or gearbox end of cylinder block.

Marking on cylinder block refers to top bearing shell (bearing shell for cylinder block).

– Note down letters and refer to table for colour code to be fitted.

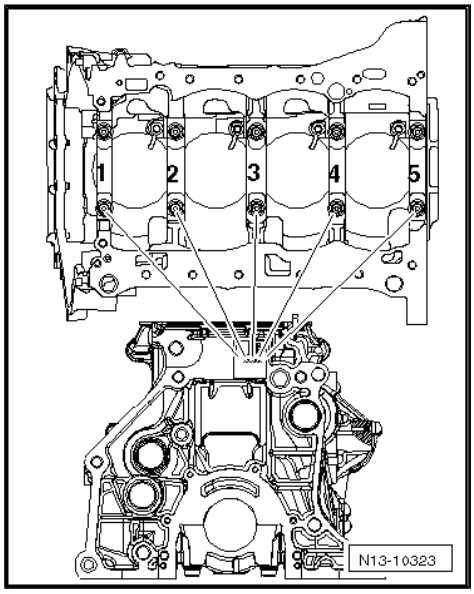

Marking of bearing shell for bearing cap:

Marking on crankshaft refers to bottom bearing shell (bearing shell for bearing cap).

– Note down letters and refer to table for colour code to be fitted.

S	=	Black
R	=	Red
G	=	Yellow
B	=	Blue
W	=	White

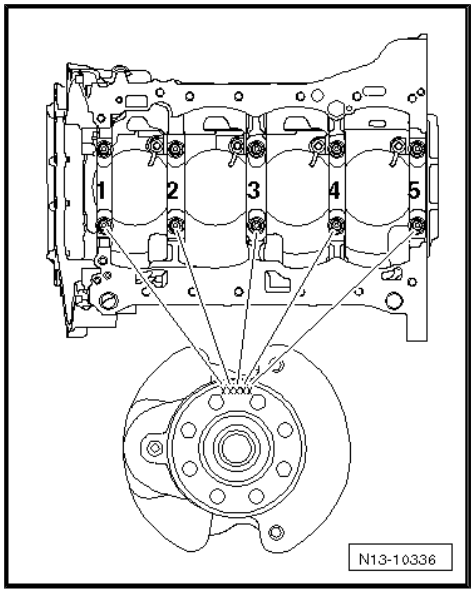

3.4 Measuring axial clearance of crankshaft

Special tools and workshop equipment required

- Universal dial gauge bracket - VW 387-

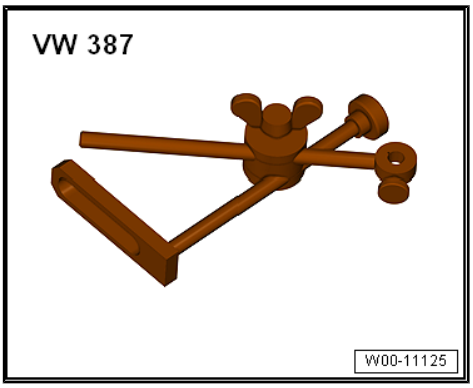

- Dial gauge - VAS 6079-

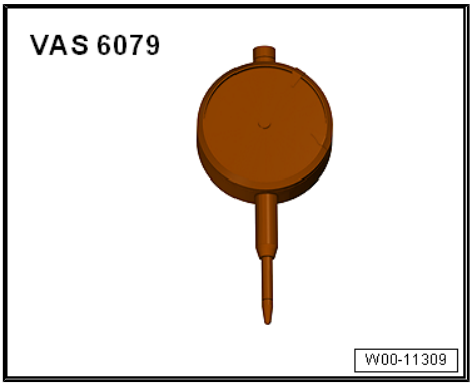

Procedure

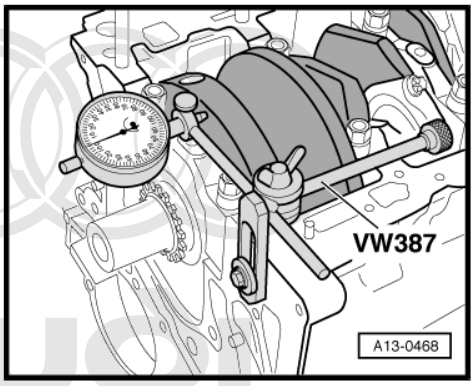

– Bolt dial gauge - VAS 6079- with universal dial gauge bracket - VW 387- onto cylinder block and set it against crank web.

– Push crankshaft against dial gauge by hand and set gauge to “0”.

– Push crankshaft away from dial gauge and read off value.

Axial clearance:

- New: 0.07 ... 0.23 mm.
- Wear limit: 0.30 mm.

3.5 Measuring radial clearance of crankshaft

Special tools and workshop equipment required

- Plastigage

Procedure

Note

Renew used bearing shells.

– Remove crankshaft bearing caps and clean bearing caps and journals.

– Place a length of Plastigage corresponding to the width of the bearing on the bearing journal or bearing shell.

- The Plastigage must be positioned in the centre of the bearing shell.

– Fit crankshaft bearing caps and secure with old bolts -1 ... 10- ⇒ page 75 without rotating crankshaft.

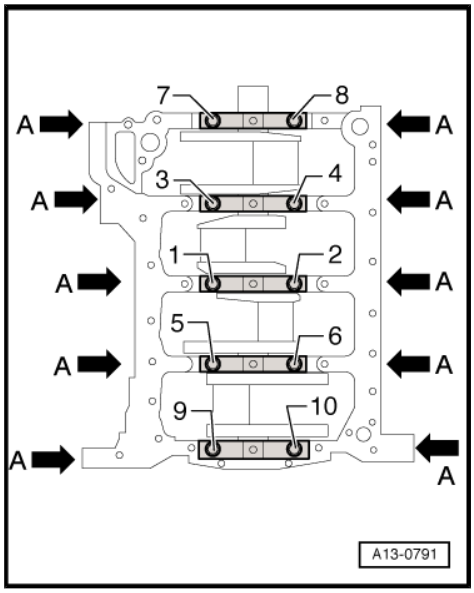

Note

Disregard bolts indicated by -arrows A-.

– Remove crankshaft bearing caps again.

– Compare width of Plastigage with measurement scale.

Radial clearance:

- New: 0.017 ... 0.037 mm.
- Wear limit: 0.15 mm.

– When carrying out final assembly, renew bolts.

3.6 Removing and installing sender wheel

– Remove engine.

– Remove sealing flange (gearbox end) ⇒ page 71 .

– Remove upper section of sump ⇒ page 170 .

– Remove balance shaft timing chain ⇒ page 112 .

– Unbolt conrod bearing caps.

– Remove crankshaft bearing caps.

– Remove crankshaft and unbolt sender wheel.

– Sender wheel -2- must always be renewed after slackening off bolts -1-.

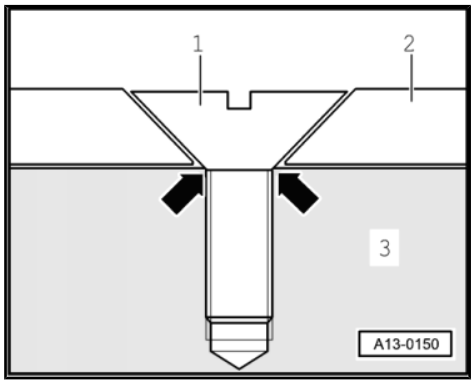

Note

◆ *If the countersunk bolts are tightened a second time, the seats for the bolt heads in the sender wheel will be deformed to such an extent that the bolt heads make contact with the crankshaft -3- -arrows- and the sender wheel beneath the bolts will be loose.*

◆ *Sender wheel can only be fitted in one position because holes are offset.*

– After renewing sender wheel, misfire adaptions must be reset. To do so, select `01 - Reset adaptions misfires` in `Guided Functions` mode of ⇒ Vehicle diagnostic tester.

Tightening torques

◆ ⇒ "3.1 Exploded view - crankshaft", page 74

4 Balance shaft

⇒ "4.1 Exploded view - balance shaft", page 79

⇒ "4.2 Removing and installing balance shaft", page 80

⇒ "4.3 Renewing oil seal for balance shaft (inlet side)", page 86

4.1 Exploded view - balance shaft

1 - Bolt
- ❑ Renew
- ❑ 9 Nm

2 - Balance shaft
- ❑ Inlet side
- ❑ Always renew after removal
- ❑ Lubricate bearing with engine oil
- ❑ Renewing ⇒ page 80

3 - Balance shaft
- ❑ Exhaust side
- ❑ Always renew after removal
- ❑ Lubricate bearing with engine oil
- ❑ Renewing ⇒ page 83

4 - Bolt
- ❑ Renew
- ❑ 9 Nm

5 - Tube for balance shaft
- ❑ Installation position ⇒ page 79

6 - Oil seal for coolant pump drive
- ❑ Renewing ⇒ page 86

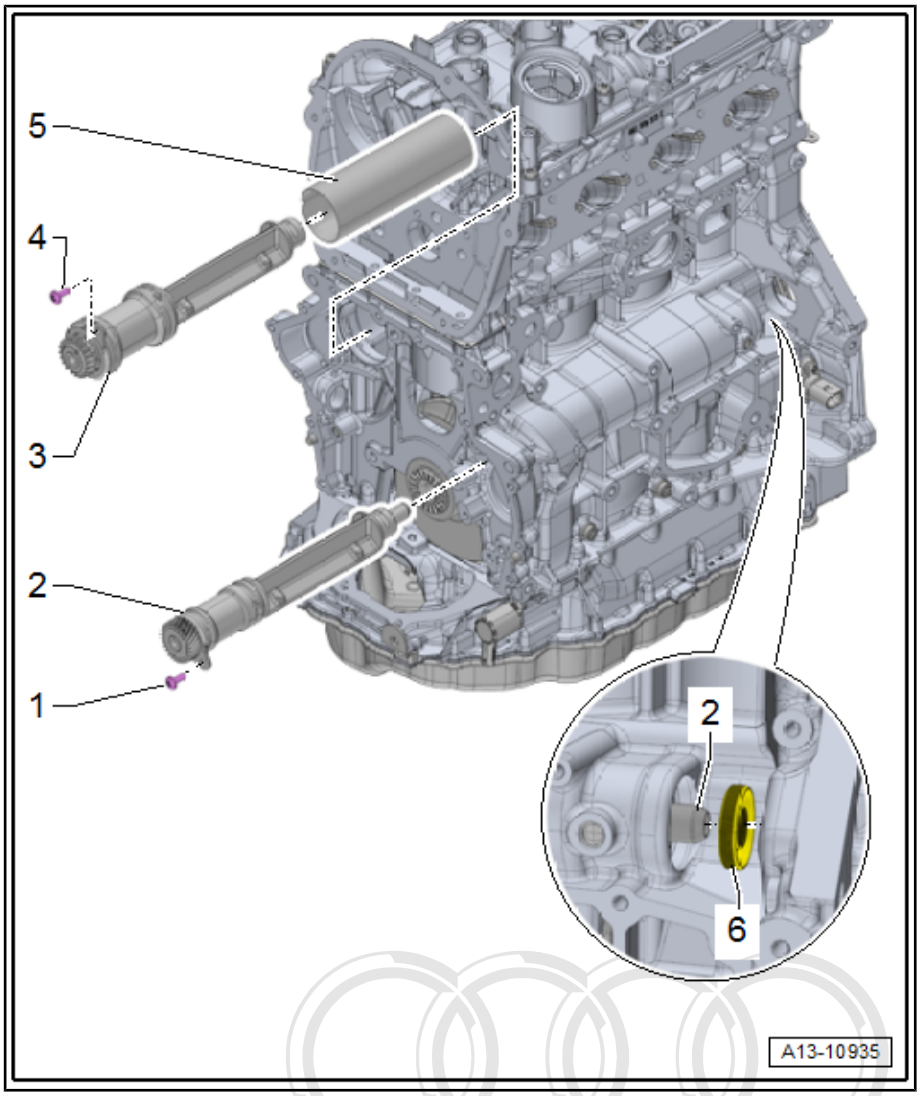

Tube for balance shaft - installation position

- Lug on tube for balance shaft must engage in slot -arrow-.

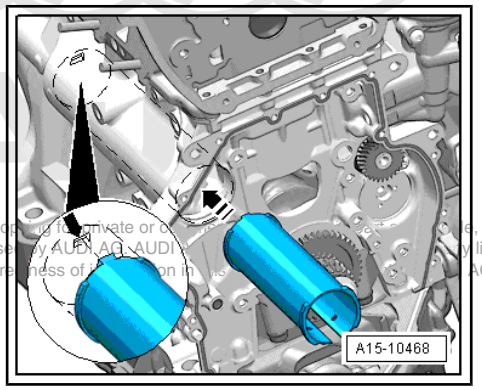

4.2 Removing and installing balance shaft

⇒ “4.2.1 Removing and installing balance shaft (inlet side)”, page 80

⇒ “4.2.2 Removing and installing balance shaft (exhaust side)”, page 83

4.2.1 Removing and installing balance shaft (inlet side)

Special tools and workshop equipment required

- Puller - T10394-

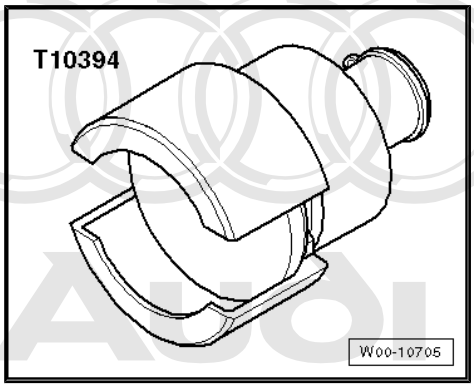

- Puller - T10055-

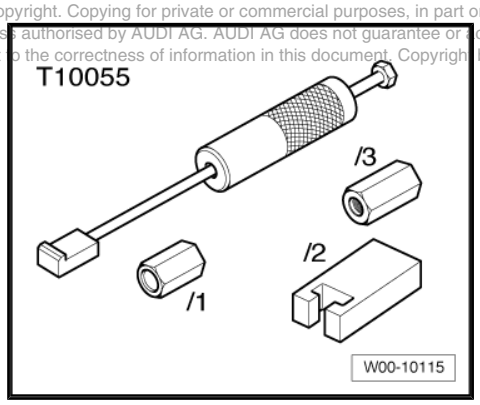

Removing

Note

Always renew balance shaft for inlet camshaft after removal.

– Remove toothed belt for coolant pump ⇒ page 203 .
– Remove timing chain cover (top) ⇒ page 96 .
– Remove timing chain cover (bottom) ⇒ page 96 .
– Remove camshaft timing chain ⇒ page 104 .
– Remove balance shaft timing chain ⇒ page 112 .

– Unscrew bolt -2- and detach drive sprocket -1- for toothed belt for coolant pump.

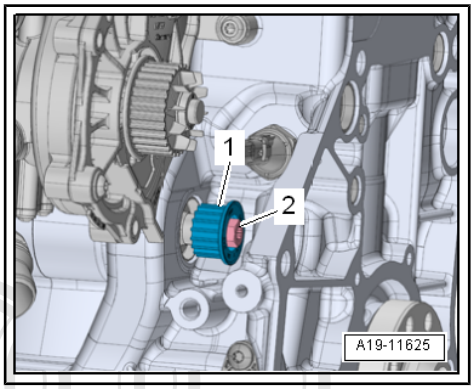

– Remove idler gear -1-.

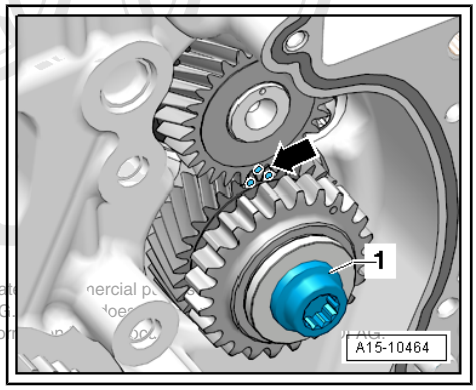

– Remove bolt -2- securing balance shaft for inlet camshaft.

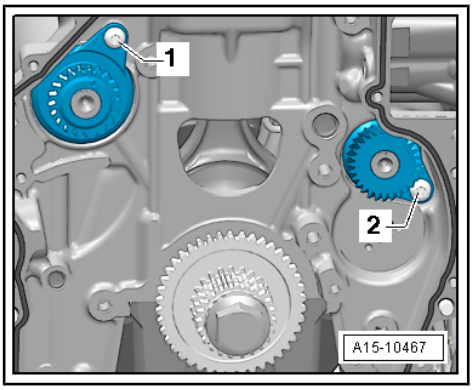

– Insert half shell - T10394/1- of puller - T10394- and turn upwards in direction of arrow.

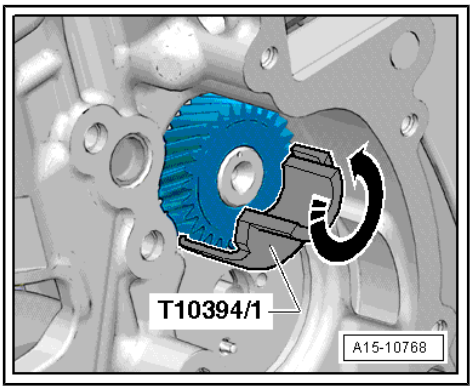

– Insert puller - T10394- and press locking collar in direction of -arrow-.

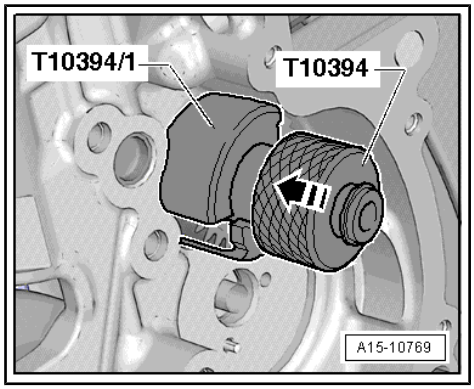

– Screw puller - T10055- into puller - T10394- and knock out balance shaft in direction of -arrow-.

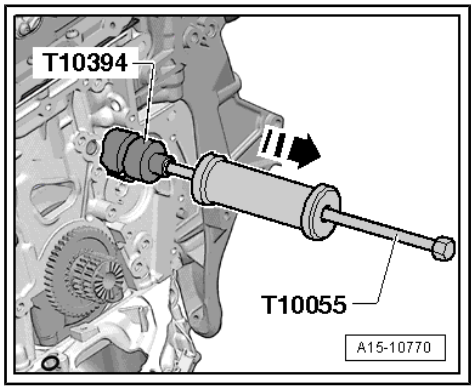

Installing

Note

It might be necessary to cool the balance shaft before installing due to the minimal clearance between balance shaft and cylinder block. Check if it is possible to insert the balance shaft into the cylinder block without applying force. If this is not the case, the balance shaft must be cooled before installing.

– Put new balance shaft for 30 minutes into freezer compartment or spray with chilling agent (commercially available) if necessary.

– Lubricate balance shaft bearing with engine oil.

– Install new balance shaft for inlet camshaft and tighten bolt -2-.

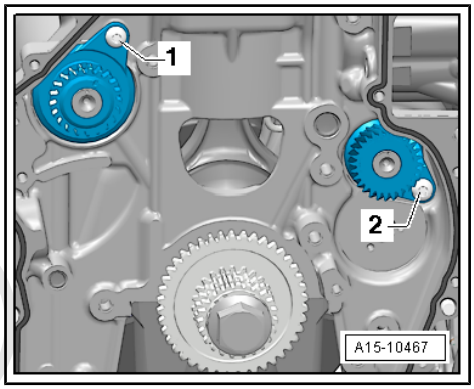

– Renew O-ring -1- and lubricate with engine oil.

– Lubricate bearing mounting with engine oil and install; dowel pin -arrow- for bearing mounting must engage in bore in cylinder block.

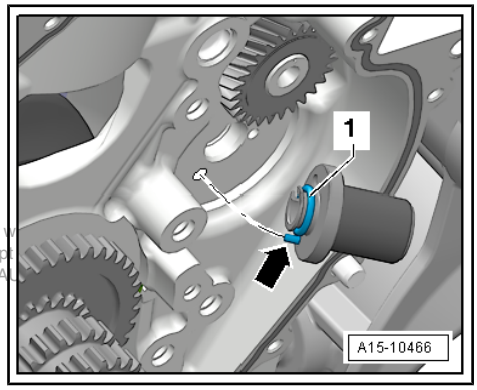

Caution

Always renew idler gear. If this is not done, there is no backlash, which causes engine damage.

The new idler gear has a special lubricant coating which wears off after a short running period and thus automatically creates the specified backlash.

– Mark faces of gear teeth of idler gear with paint marker -arrow-.
– Insert idler gear; marking on balance shaft must be positioned between markings on faces of gear teeth.

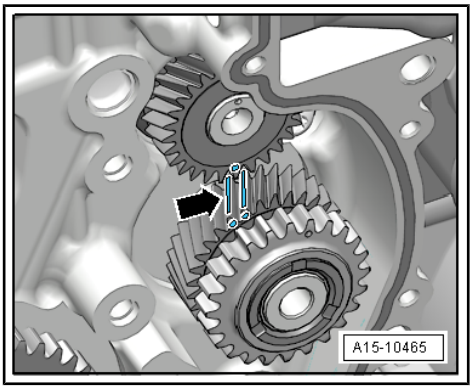

– Tighten bolt -1- for idler gear: tightening sequence ⇒ page 103 .
– Check markings on idler gear/balance shaft -arrow-.

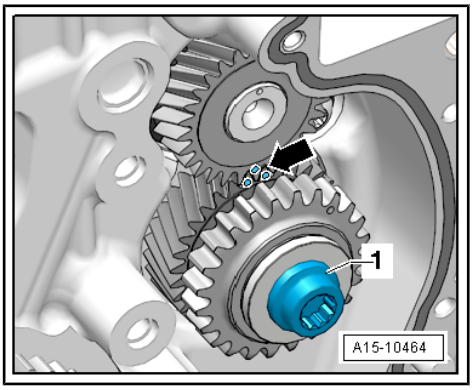

Further assembly is basically carried out in reverse order of dismantling. Note the following:

– Install balance shaft timing chain ⇒ page 112 .
– Install camshaft timing chain ⇒ page 104 .
– Install timing chain cover (bottom) ⇒ page 96 .
– Install timing chain cover (top) ⇒ page 96 .
– Renew oil seal for balance shaft (inlet side) ⇒ page 86 .
– Install toothed belt for coolant pump ⇒ page 203 .

Tightening torques

♦ ⇒ “2.2 Exploded view - drive chain for balance shaft”, page 102

4.2.2 Removing and installing balance shaft (exhaust side)

Special tools and workshop equipment required

♦ Puller - T10394-

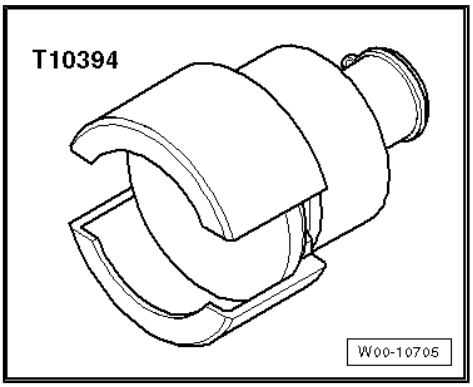

♦ Puller - T10055-

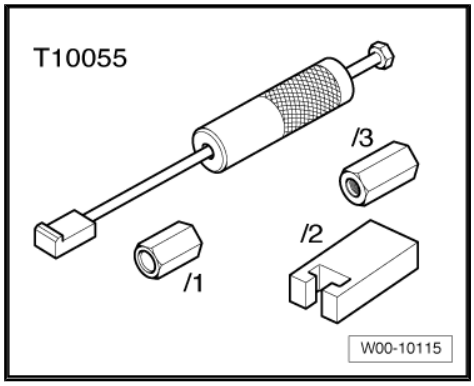

Removing

Note

Always renew balance shaft for exhaust camshaft after removal.

– Remove timing chain cover (top) ⇒ page 96 .
– Remove timing chain cover (bottom) ⇒ page 96 .
– Remove camshaft timing chain ⇒ page 104 .
– Remove balance shaft timing chain ⇒ page 112 .
– Remove bolt -1- securing balance shaft for outlet camshaft.

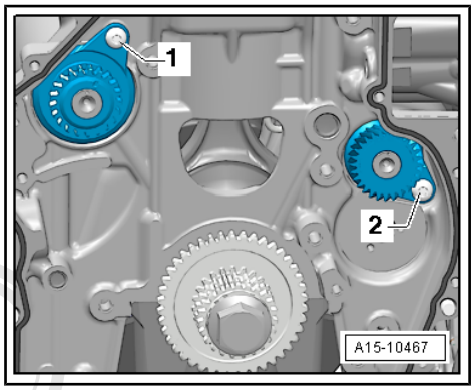

– Insert half shell -T10394/1- from puller - T10394- .

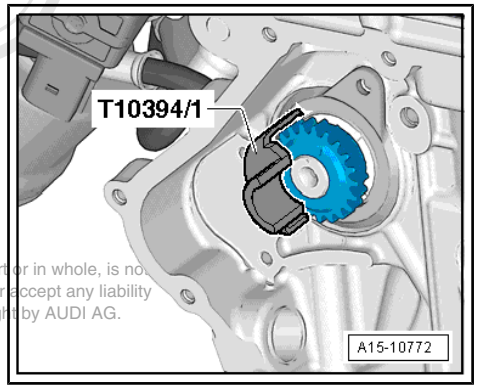

– Insert puller - T10394- and press locking collar in direction of -arrow-.

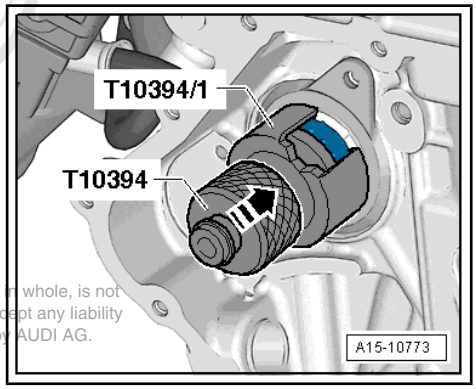

– Screw puller - T10055- into puller - T10394- and knock out balance shaft.

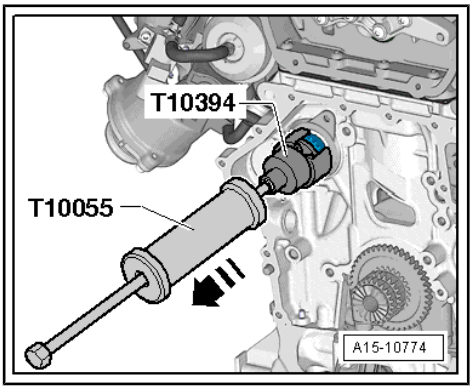

Installing

Note

It might be necessary to cool the balance shaft before installing due to the minimal clearance between balance shaft and cylinder block. Check if it is possible to insert the balance shaft into the cylinder block without applying force. If this is not the case, the balance shaft must be cooled before installing.

– Check installation position of tube for balance shaft -arrow-.

Lug -arrow- must engage in slot.

– Put new balance shaft for 30 minutes into freezer compartment or spray with chilling agent (commercially available) if necessary.

– Lubricate balance shaft bearing with engine oil.

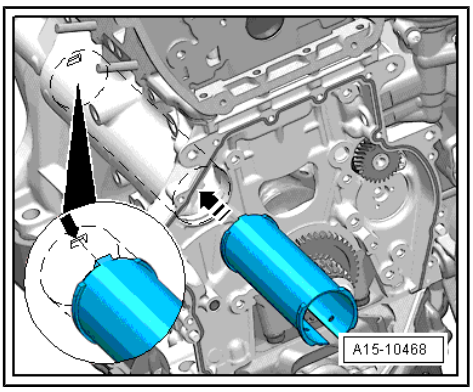

– Install new balance shaft for exhaust camshaft.

– Make sure that balance shaft is in full contact with crankcase before tightening bolt -1-.

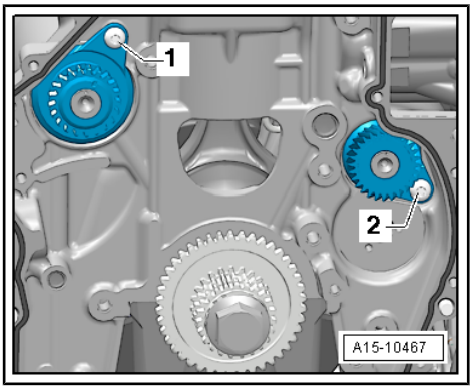

Note

Repeat insertion of tube for balance shaft if the balance shaft is not in full contact.

Further assembly is basically carried out in reverse order of dismantling. Note the following:

– Install balance shaft timing chain ⇒ page 112 .

– Install camshaft timing chain ⇒ page 104 .

– Install timing chain cover (bottom) ⇒ page 96 .

– Install timing chain cover (top) ⇒ page 96 .

Tightening torques

♦ ⇒ “4.1 Exploded view - balance shaft”, page 79

4.3 Renewing oil seal for balance shaft (inlet side)

Special tools and workshop equipment required

- Thrust piece - T10353-

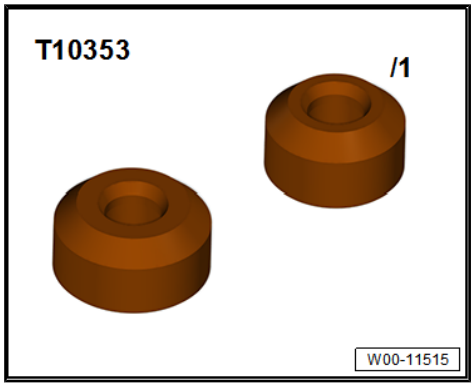

Procedure

– Remove small coolant pipe ⇒ page 214 .

– Remove toothed belt for coolant pump ⇒ page 203 .

– Unscrew bolt -2- and detach drive sprocket -1- for toothed belt for coolant pump.

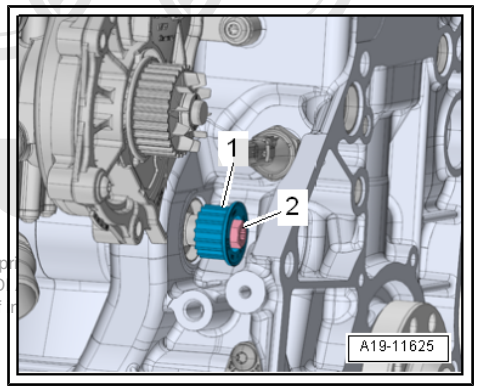

– Press screwdriver -1- firmly onto section -2- of oil seal -arrow B-.

– Lever out oil seal -arrow A-.

– Clean contact surface and sealing surface.

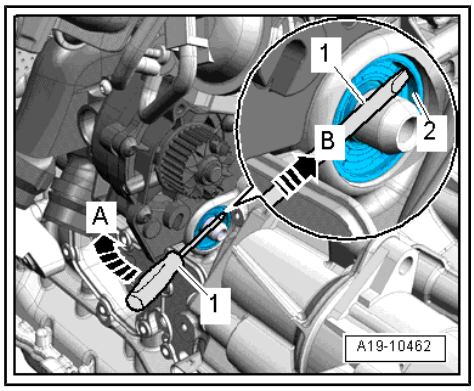

– Lubricate sealing surface of balance shaft -2- with gear oil.
– Fit oil seal -1- onto balance shaft.
• The marking “Luftseite” (“Outside”) -arrow- should be legible from the outside.

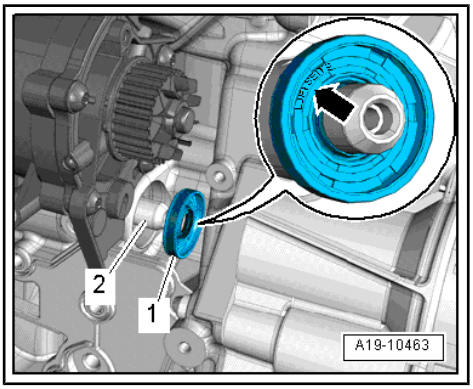

Caution

Risk of damage to thread.

♦ *The drive sprocket bolt has a left-hand thread.*

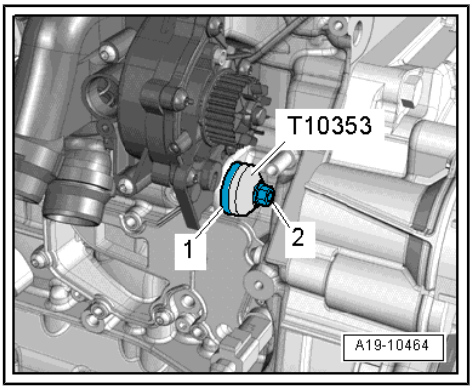

– Apply thrust piece - T10353- to oil seal -1- and press into cylinder block as far as stop using bolt -2- (take care not to tilt oil seal).
– Install toothed belt for coolant pump ⇒ page 203 .
– Install small coolant pipe ⇒ page 214 .

Note

Do not reuse coolant.

– Fill up with coolant ⇒ page 186 .

5 Pistons and conrods

5.1 Exploded view - pistons and conrods

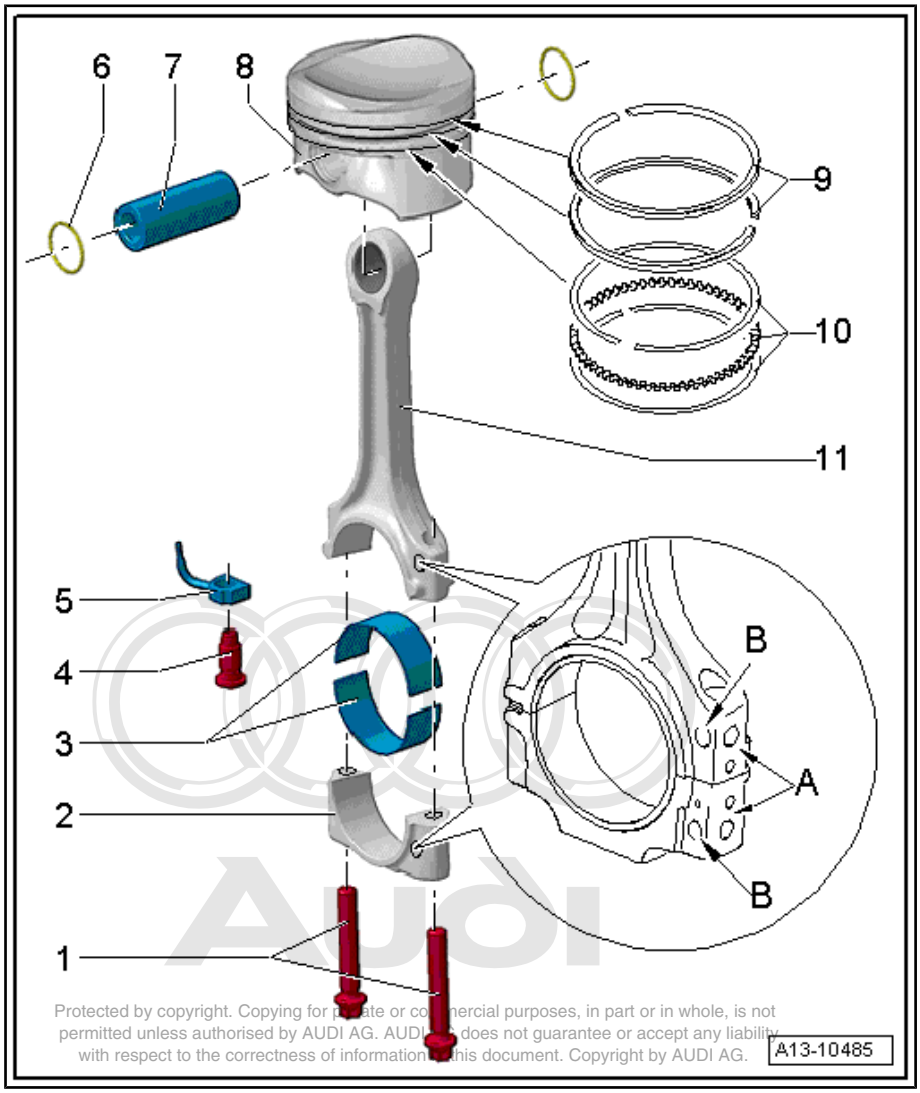

1 - Conrod bolts

- ❑ Renew
- ❑ Lubricate threads and contact surface
- ❑ Use old bolts when measuring radial clearance
- ❑ 45 Nm + turn 90° further

2 - Conrod bearing cap

- ❑ Note installation position
- ❑ Due to the cracking method used to separate the bearing cap from the conrod in manufacture, the caps only fit in one position and only on the appropriate conrod
- ❑ Mark cylinder and conrod allocation in colour -A-
- ❑ Installation position: Marking -B- faces towards pulley end
- ❑ Separating parts of new conrod ⇒ page 92

3 - Bearing shells

- ❑ Installation position ⇒ page 89
- ❑ Renew used bearing shells
- ❑ Axial clearance when new: 0.10...0.35 mm; wear limit: 0.40 mm
- ❑ Measuring radial clearance ⇒ page 93

4 - Pressure relief valve

- ❑ 27 Nm

5 - Oil spray jet

- ❑ For piston cooling
- ❑ Do not bend oil spray jet
- ❑ Always renew bent oil spray jets

6 - Circlip

- ❑ Renew

7 - Piston pin

8 - Piston

- ❑ Removing and installing ⇒ page 89
- ❑ Mark installation position and cylinder number
- ❑ Arrow on piston crown points to pulley end
- ❑ Checking pistons and cylinder bores ⇒ page 91

9 - Compression rings

- ❑ Use piston ring pliers (commercially available) to remove and install
- ❑ Offset gaps by 120°
- ❑ Installation position: marking “TOP” or side with lettering faces towards piston crown
- ❑ Checking ring gap ⇒ page 91
- ❑ Checking ring-to-groove clearance ⇒ page 91

10 - Oil scraper ring

- ❑ 2 parts
- ❑ Install with gap offset by 120° to next compression ring
- ❑ “TOP” or “R” must face towards piston crown
- ❑ Checking ring gap ⇒ page 91
- ❑ Ring-to-groove clearance cannot be checked

11 - Conrod

- ❑ Only renew as a complete set
- ❑ Mark cylinder and conrod bearing cap allocation in colour -A-
- ❑ Mark cylinder and conrod bearing cap allocation
- ❑ Installation position: Marking -B- faces towards pulley end
- ❑ Separating parts of new conrod ⇒ page 92
- ❑ Measuring radial clearance ⇒ page 93

Installation position of bearing shell

– Position bearing shells in centre of conrod and conrod bearing cap when fitting.

Dimension -a- must be identical on both sides.

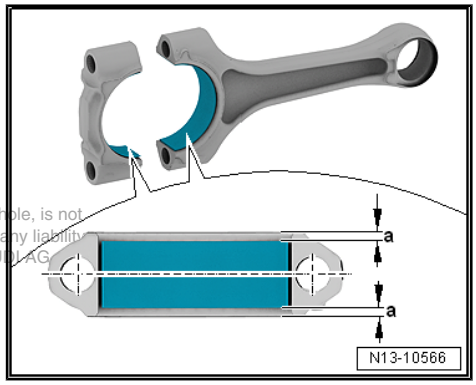

5.2 Removing and installing pistons

Special tools and workshop equipment required

- Drift - VW 222 A-

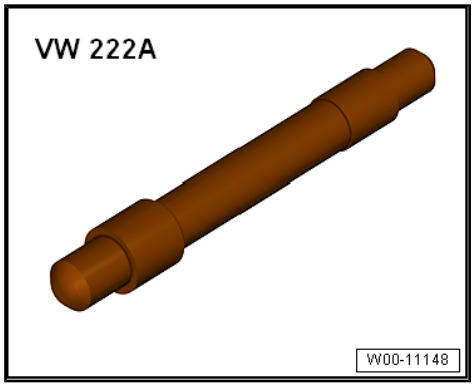

- Piston ring clamp, commercially available

Removing

- Engine secured to engine and gearbox support - VAS 6095- ⇒ page 32

– Remove cylinder head ⇒ page 120 .

– Remove upper section of sump ⇒ page 170 .

– Mark installation position and cylinder number of piston.

– Mark installation position and cylinder number of conrod ⇒ Item 11 (page 89) .

– Remove conrod bearing cap and pull out piston and conrod upwards.

Note

If piston pin is difficult to remove, heat piston to approx. 60 °C.

– Take circlip out of piston pin boss.

– Use drift - VW 222 A- to drive out piston pin.

Installing

Installation is carried out in the reverse order; note the following:

Note

- *Renew the bolts tightened with specified tightening angle.*
- *Arrow on piston crown points to pulley end.*
- *Piston ring gaps should be spaced at 120°.*

– Oil running surfaces of bearing shells.

– Install piston using commercially available piston ring clamp; note installation position ⇒ Item 8 (page 89) .

– Install conrod bearing cap; note installation position ⇒ Item 2 (page 88) .

– Install cylinder head ⇒ page 120 .

– Install sump (upper section) ⇒ page 170 .

Tightening torques

- ⇒ “5.1 Exploded view - pistons and conrods”, page 88

5.3 Checking pistons and cylinder bores

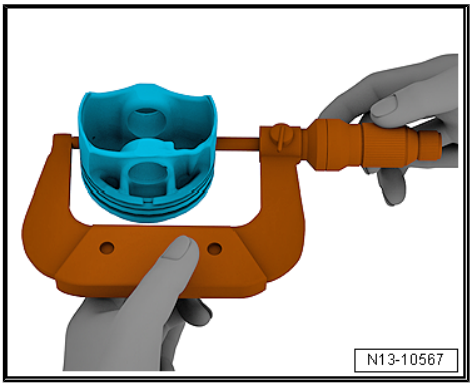

Checking piston

– Using a micrometer (75 ... 100 mm), measure approx. 15 mm from the lower edge, perpendicular to the piston pin axis.

♦ Difference between actual and nominal diameter: not more than 0.04 mm.

		Piston ∅
Basic dimension	mm	82.465 [1)]
• [1)]Dimensions not including graphite coating (thickness 0.02 mm). The graphite coating will wear down in service.		

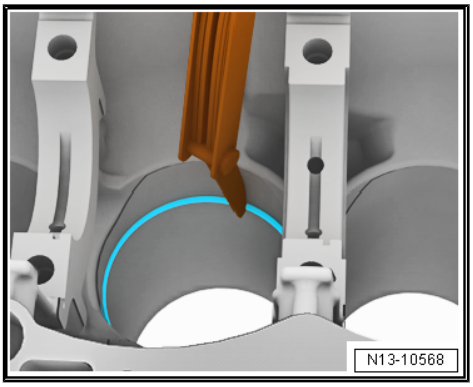

Checking piston ring gap

– Insert piston ring at right angle to cylinder wall from above and push down into lower cylinder opening approx. 15 mm from bottom of cylinder. Use a piston without rings to push ring into bore.

Piston ring Dimensions in mm	New	Wear limit
Compression ring	0.20...0.40	0.80
Oil scraper ring	0.25...0.50	0.80

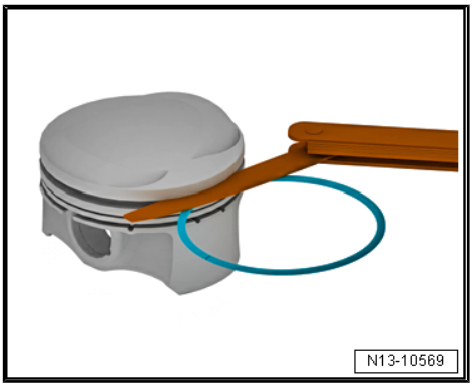

Checking ring-to-groove clearance

– Clean groove in piston before checking clearance.

Piston ring Dimensions in mm	New	Wear limit
1st compression ring	0.06 … 0.09	0.20
2nd compression ring	0.03 … 0.06	0.15
Oil scraper rings	Cannot be measured	

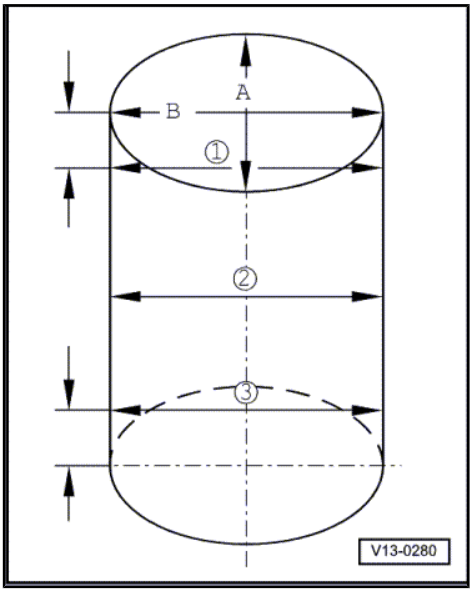

Checking cylinder bore

Special tools and workshop equipment required

- Cylinder gauge - VAS 6078-

Caution

Machining (reboring, honing, grinding) cylinder bore with workshop equipment is not permitted. The surface of the cylinder bore is damaged by machining.

– Use a cylinder gauge - VAS 6078- to take measurements at 3 points in transverse direction -A- and in longitudinal direction -B-.

- Difference between actual and nominal diameter: not more than 0.08 mm.

		Cylinder bore ∅
Basic dimension	mm	82.51

Note

Measuring the cylinder bores must not be done when the cylinder block is mounted to the engine and gearbox stand - VAS 6095- , as incorrect measurements may result.

5.4 Separating parts of new conrod

It is possible that the two parts of a new conrod are not completely separated as intended. If it is not possible to take off the conrod bearing cap by hand, proceed as follows:

– Mark cylinder number of conrod ⇒ Item 11 (page 89) .

– Clamp the conrod lightly in a vice using aluminium jaw covers as shown in illustration.

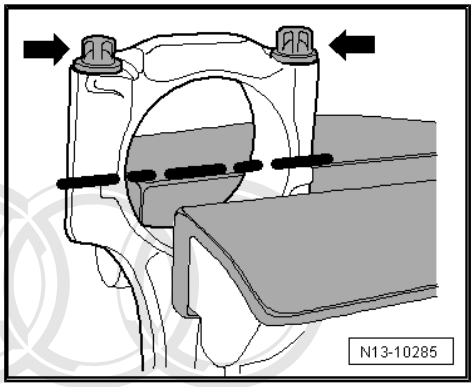

Note

- *To avoid any risk of damage, the conrod should only be clamped lightly.*
- *The conrod is clamped in a position below the dotted line.*

– Unscrew the two bolts -arrows-. approx. 5 turns.

– Using a plastic hammer, carefully knock conrod bearing cap loose in direction of -arrow-.

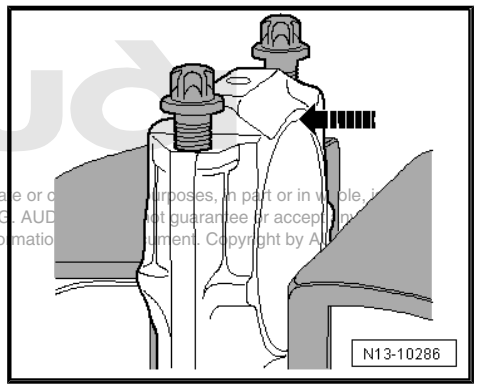

5.5 Checking radial clearance of conrod bearings

Special tools and workshop equipment required

- ♦ Plastigage

Procedure

Note

Use old bolts when measuring radial clearance.

- Remove conrod bearing cap.
- Clean bearing cap and bearing journal.
- Place a length of Plastigage corresponding to the width of the bearing on the bearing journal or in the bearing shell.
- Fit conrod bearing cap and secure with old bolts ⇒ Item 1 (page 88) without rotating crankshaft.
- Remove conrod bearing cap again.
- Compare width of Plastigage with measurement scale.

Radial clearance:

- New: 0.02 ... 0.06 mm.
- Wear limit: 0.09 mm.

- When carrying out final assembly, renew bolts.

15 – Cylinder head, valve gear

1 Timing chain cover

⇒ "1.1 Exploded view - timing chain cover", page 94
⇒ "1.2 Removing and installing timing chain cover", page 96
⇒ "1.3 Renewing oil seal for vibration damper", page 98

1.1 Exploded view - timing chain cover

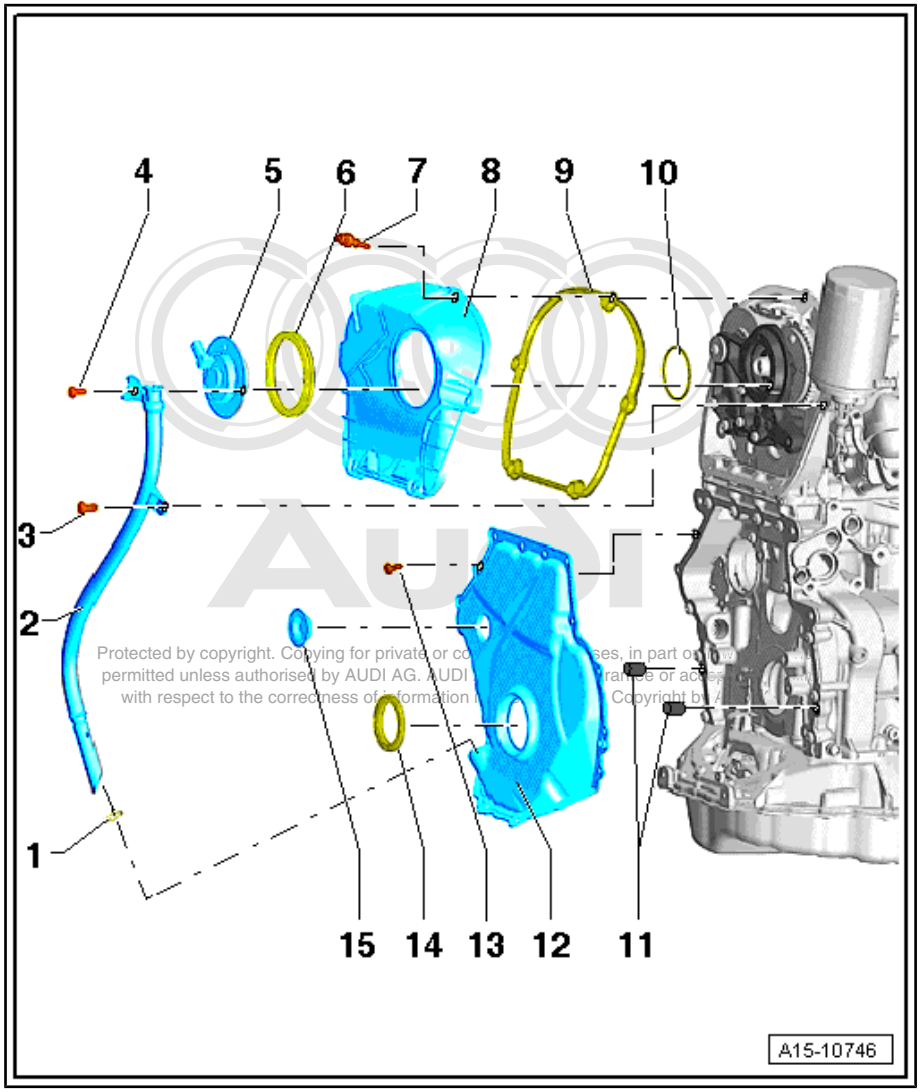

1 - O-ring
- ❑ Renew
- ❑ Lubricate before installing

2 - Guide tube for oil dipstick

3 - Bolt
- ❑ 9 Nm

4 - Bolt
- ❑ 9 Nm

5 - Camshaft control valve 1 - N205-
- ❑ Removing and installing ⇒ page 150

6 - Oil seal
- ❑ Lubricate before installing
- ❑ Renew if damaged

7 - Bolt
- ❑ Tightening sequence ⇒ page 95

8 - Timing chain cover (top)
- ❑ Removing and installing ⇒ page 95

9 - Gasket
- ❑ Renew if damaged

10 - O-ring
- ❑ Renew
- ❑ Lubricate before installing

11 - Dowel pins
- ❑ For centring cover

12 - Timing chain cover (bottom)
- ❑ Renewing ⇒ page 96

13 - Bolt
- ❑ Renew
- ❑ Tightening sequence with 15 bolts ⇒ page 95
- ❑ Tightening sequence with 8 bolts ⇒ page 95

14 - Oil seal

- ❑ For vibration damper
- ❑ Renewing ⇒ page 98

15 - Sealing plug

- ❑ Renew

Timing chain cover (top) - tightening sequence

– Tighten bolts -1 to 5- in the sequence shown:

1. Tighten bolts to 9 Nm.

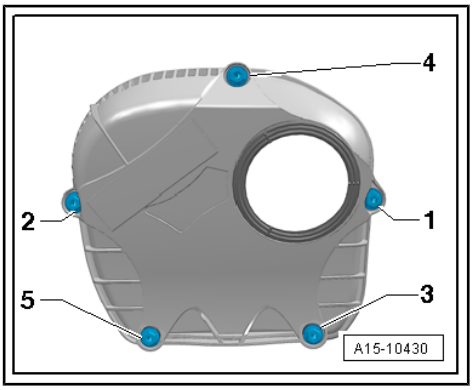

Timing chain cover (bottom), tightening sequence with 15 bolts

– Tighten bolts -1 to 15- in two stages in the sequence shown:

– 1. Tighten bolts to 8 Nm.

– 2. Turn bolts 45° further.

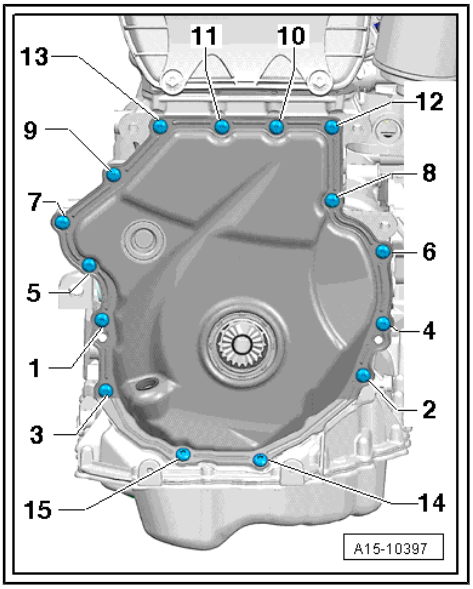

Timing chain cover (bottom), tightening sequence with 8 bolts

– Tighten bolts -1 to 8- in two stages in the sequence shown:

– 1. Tighten bolts to 4 Nm.

– 2. Turn bolts 45° further.

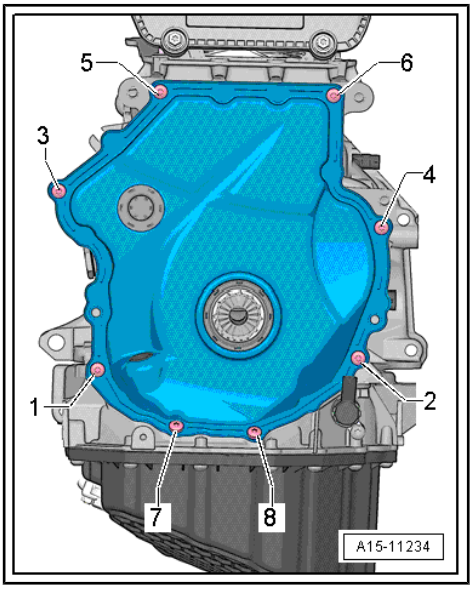

1.2 Removing and installing timing chain cover

⇒ “1.2.1 Removing and installing timing chain cover (top)”, page 96

⇒ “1.2.2 Renewing timing chain cover (bottom)”, page 96

1.2.1 Removing and installing timing chain cover (top)

Removing

– Remove camshaft control valve 1 - N205- ⇒ page 150 .

– Unscrew bolts -1 to 5- and remove timing chain cover (top).

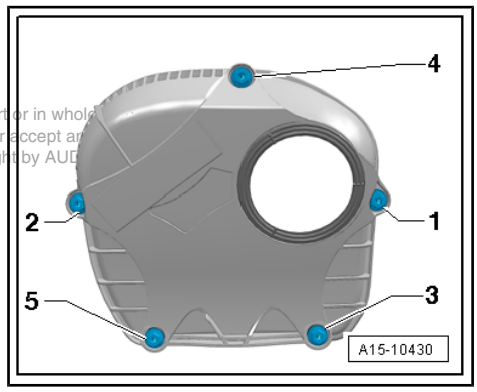

Installing

Installation is carried out in the reverse order; note the following:

Note

Renew O-ring.

– Lubricate seal and O-ring with engine oil.

– Install timing chain cover (top); tightening sequence ⇒ Fig. ““Timing chain cover (top) - tightening sequence““ , page 95 .

– Install camshaft control valve 1 - N205- ⇒ page 150 .

Tightening torques

♦ ⇒ “1.1 Exploded view - timing chain cover”, page 94

1.2.2 Renewing timing chain cover (bottom)

Note

The timing chain cover is bent out of shape when it is removed because of the adhesive strength of the sealant; it must therefore always be renewed.

Removing

– Remove engine cover panel ⇒ page 54 .

– Remove vibration damper ⇒ page 56 .

– Remove bolts -arrows- and detach guide tube for oil dipstick from timing chain cover.

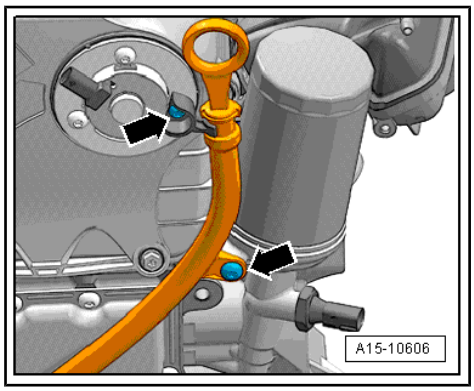

– Remove bolts -1 ... 15-.

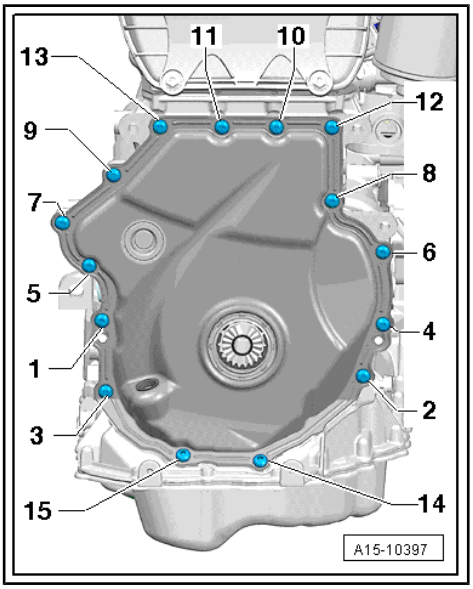

Note

Some versions have only 8 bolts.

– Prise off timing chain cover (bottom).

Installing

♦ Silicone sealant ⇒ Electronic parts catalogue

Note

♦ *Note the expiry date of the silicone sealant.*

♦ *The cover must be installed within 5 minutes after applying the silicone sealant.*

♦ *Renew the bolts tightened with specified tightening angle.*

♦ *Renew seals, gaskets and self-locking nuts.*

– Remove sealant remaining on cylinder block with flat scraper.

– Check that both dowel pins are fitted in cover -arrows-.

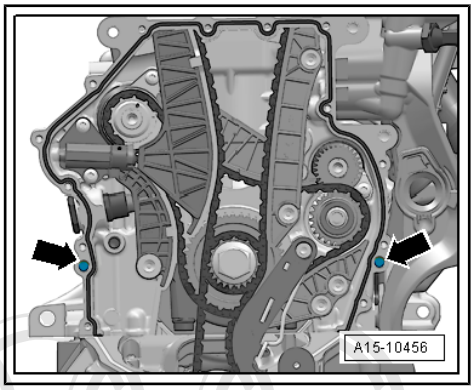

– Cut off nozzle of tube at front marking (∅ of nozzle approx. 3 mm).

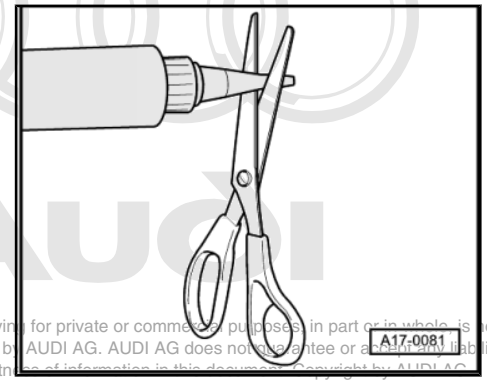

Cover with 15 bolts

– Apply silicone sealant onto clean sealing surface -arrow 1- and onto edges -arrow 2- of new cover, as illustrated.

♦ Thickness of sealant bead: 2 ... 3 mm

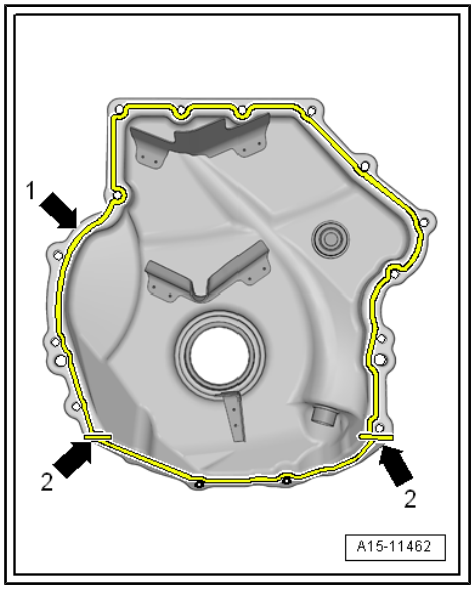

Cover with 8 bolts

– Apply silicone sealant onto clean sealing surface -arrow 1- and onto edges -arrow 2- of new cover, as illustrated.

♦ Thickness of sealant bead: 2 ... 3 mm

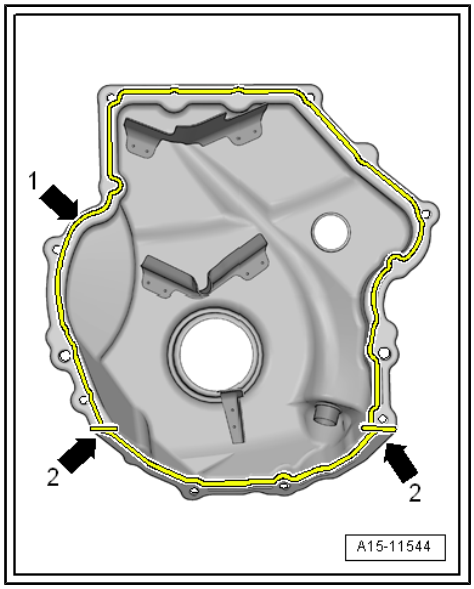

Note

♦ *The cover must be installed within 5 minutes after applying the silicone sealant.*

♦ *The bead of sealant must not be thicker than specified, otherwise excess sealant can enter the sump and obstruct the strainer in the oil intake pipe.*

– Immediately fit timing chain cover and tighten bolts:

♦ Cover with 15 bolts ⇒ page 95

♦ Cover with 8 bolts ⇒ page 95

Note

After fitting cover, let sealant dry for approx. 30 minutes. Then (and only then) fill the engine with engine oil.

– Install vibration damper ⇒ page 56 .

– Check oil level ⇒ Maintenance ; Booklet 410 .

Tightening torques

♦ ⇒ “1.1 Exploded view - timing chain cover”, page 94

1.3 Renewing oil seal for vibration damper

Special tools and workshop equipment required

- Thrust piece - T10354-

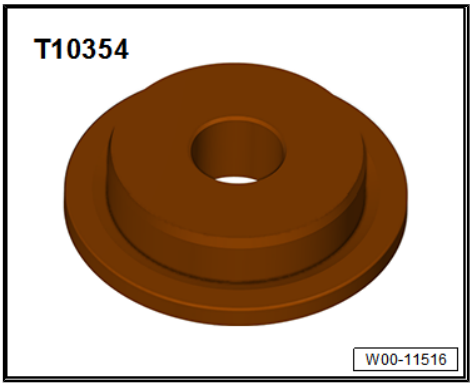

- Pressure washer - T10375-

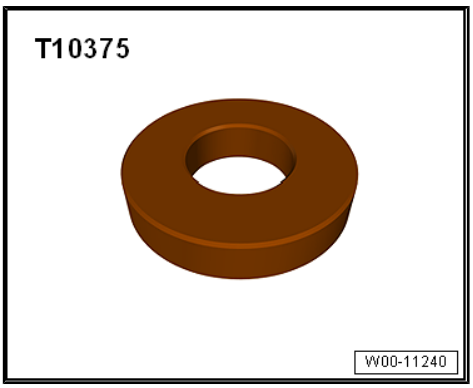

- Flange nut - 10531/4- from assembly tool - T10531-

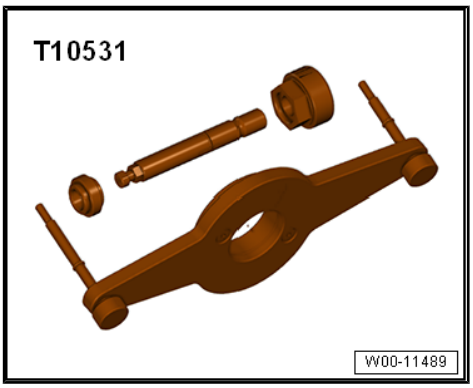

- Extractor hook - T40274-

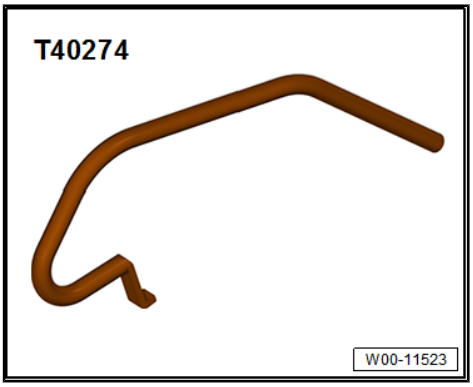

Removing

– Remove vibration damper ⇒ page 56 .

• Clamping pin - T10531/2- is inserted.

– Pry out oil seal -arrow- using extractor hook - T40274- .

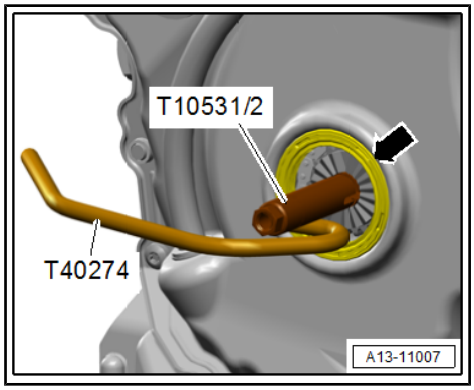

Installing

– Clean contact surface and sealing surface.

– Fit oil seal -arrow- onto thrust piece - T10354- .

• Closed side of oil seal faces thrust piece - T10354- .

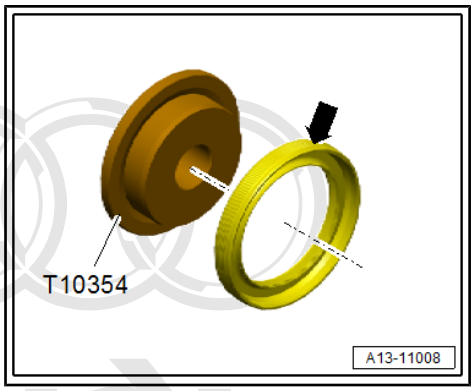

– Slide oil seal -arrow- with thrust piece - T10354- onto clamping pin - T10531/2- and position on timing chain cover (bottom).

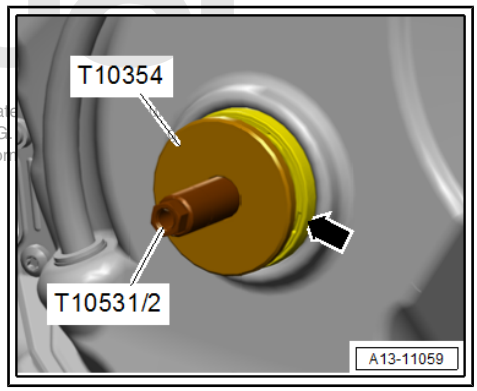

– Also fit pressure washer - T10375- and tighten flange nut - 10531/4- .

– Drive oil seal in as far as stop using thrust piece - T10354- .

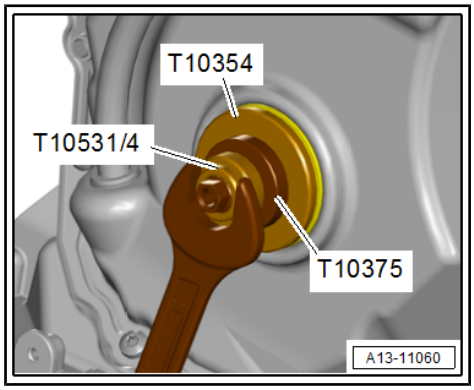

Note

Renew bolt with O-ring for vibration damper.

Further assembly is basically carried out in reverse order of dismantling. Note the following:

– Install vibration damper ⇒ page 56 .

2 Chain drive

2.1 Exploded view - camshaft timing chains

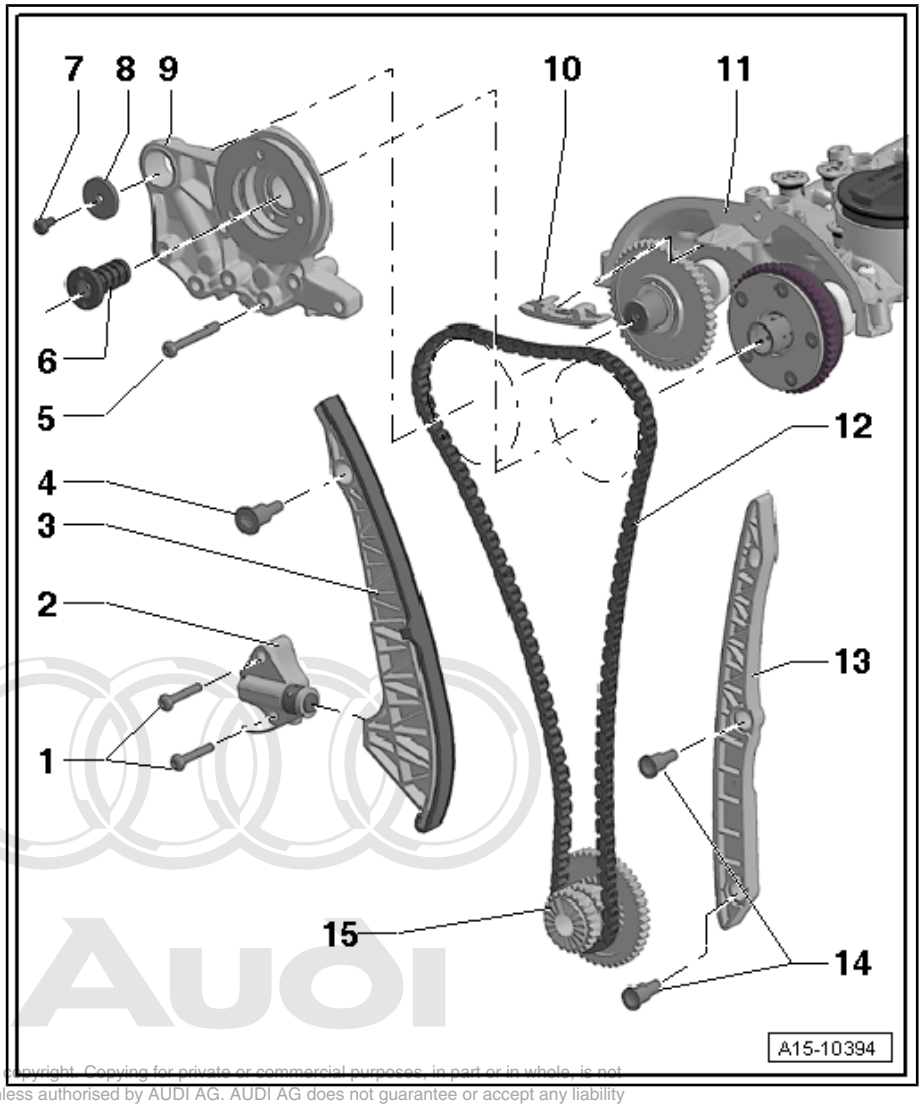

1 - Bolt
- ❑ 9 Nm

2 - Chain tensioner
- ❑ Exerts spring pressure
- ❑ Before removing, lock in place using locking pin - T40011-

3 - Tensioning rail for timing chain

4 - Guide pin
- ❑ 20 Nm

5 - Bolt
- ❑ 9 Nm

6 - Timing valve
- ❑ Left-hand thread
- ❑ 35 Nm
- ❑ Depending on version, use assembly tool - T10352- or assembly tool - T10352/1- for removal

7 - Bolt
- ❑ Renew
- ❑ On vehicles with 1.8 ltr. engine: 8 Nm + turn 90° further
- ❑ On vehicles with 2.0 ltr. engine: 20 Nm + turn 90° further

8 - Washer

9 - Bearing saddle

10 - Guide rail for camshaft timing chain

11 - Camshaft housing

12 - Camshaft timing chain
- ❑ Before removing, mark running direction with paint
- ❑ Removing and installing ⇒ page 104

13 - Guide rail for camshaft timing chain

14 - Guide pin

- ❑ 20 Nm

15 - Three-part chain sprocket assembly

- ❑ Crankshaft
- ❑ Installation position ⇒ page 102

Three-part chain sprocket assembly (crankshaft) - installation position

- The two sections -arrows- must be aligned.

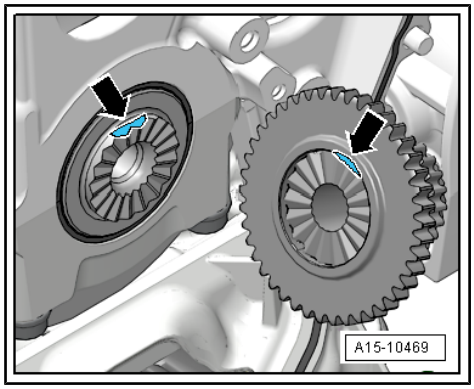

2.2 Exploded view - drive chain for balance shaft

1 - Guide pin

- ❑ 20 Nm

2 - Guide rail

- ❑ For timing chain

3 - Timing chain

- ❑ Removing ⇒ page 112

4 - Guide pin

- ❑ 20 Nm

5 - Tensioning rail

- ❑ For drive chain for balance shafts

6 - Balance shaft

- ❑ Exhaust side
- ❑ Always renew after removal
- ❑ Lubricate bearing with engine oil
- ❑ Renewing ⇒ page 83

7 - Guide pin

- ❑ 20 Nm

8 - Guide rail

- ❑ For timing chain

9 - Chain tensioner

- ❑ 85 Nm
- ❑ Apply sealant to seal

10 - Three-part chain sprocket assembly

- ❑ Installation position

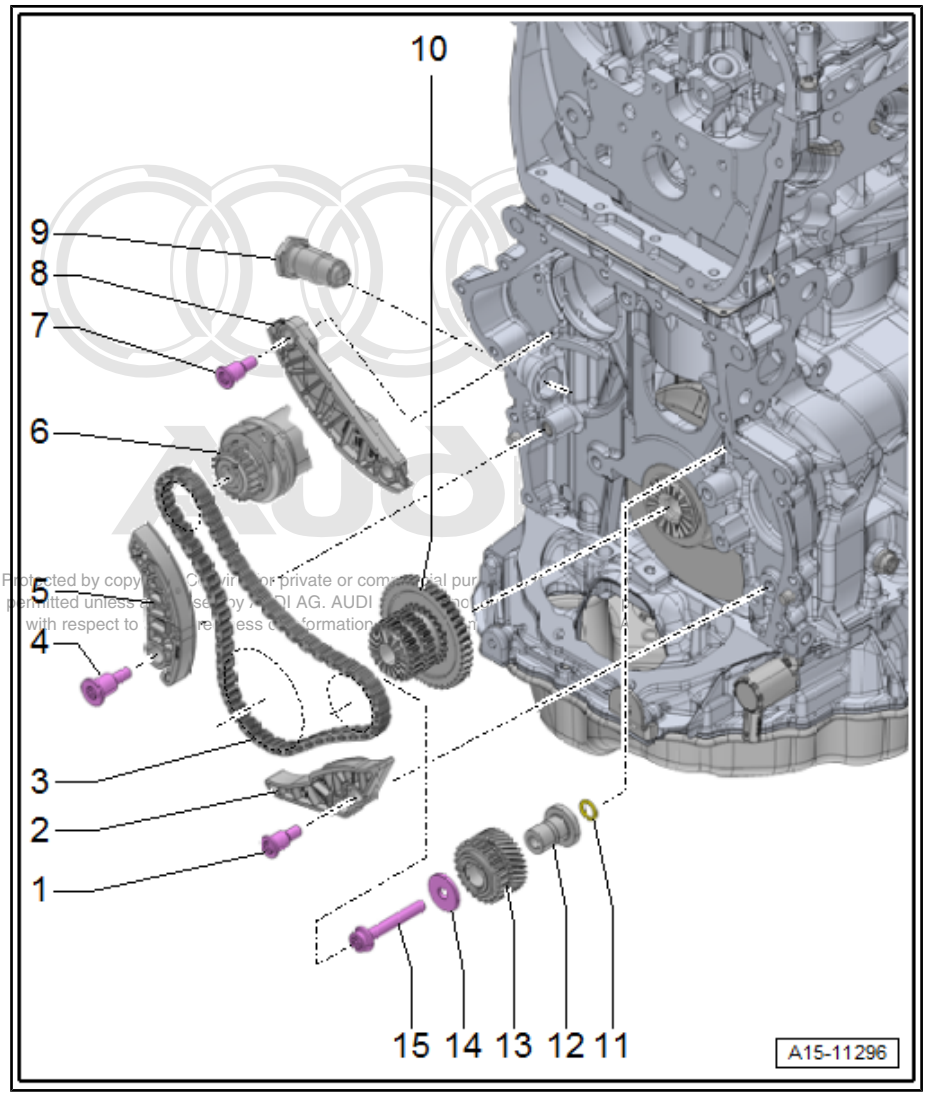

⇒ page 102

11 - O-ring

- ❑ Lubricate with engine oil

12 - Bearing mounting

- ❑ Lubricate with engine oil
- ❑ Installation position ⇒ page 103

13 - Idler gear

- ❑ If bolt ⇒ Item 15 (page 103) has been loosened, idler gear must be renewed

14 - Washer

15 - Bolt

- ❑ Renew
- ❑ If bolt has been loosened, idler gear ⇒ Item 13 (page 103) must be renewed
- ❑ Tightening sequence ⇒ page 103

Bearing mounting - installation position

- Renew O-ring -1- and lubricate with oil.
- Dowel pin -arrow- for bearing mounting must engage in bore in cylinder block.
- Lubricate bearing mounting.

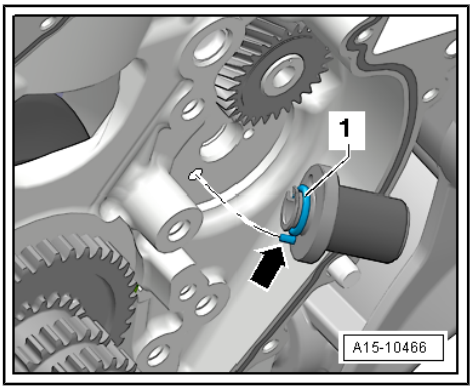

Idler gear - tightening sequence

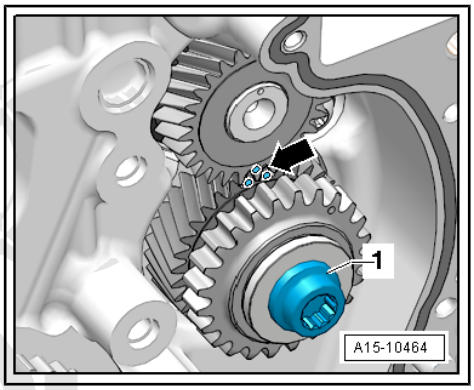

> ⚠ **Caution**
>
> ***Always renew idler gear. If this is not done, there is no backlash, which causes engine damage.***
>
> ***The new idler gear has a special lubricant coating which wears off after a short running period and thus automatically creates the specified backlash.***

– Secure with new bolt as follows:

1. Tighten with torque wrench initially to 10 Nm.
2. Turn idler gear.

Idler gear must be without play; otherwise loosen bolt and tighten again.

3. Tighten with torque wrench to 25 Nm.
4. Use rigid wrench to turn 90° further.

2.3 Removing and installing camshaft timing chain

Special tools and workshop equipment required

- Assembly tool - T10352-
- Counterhold tool - T10355-
- Locking pin - T40011-
- Assembly lever - T40243-
- Locking tool - T40267-
- Camshaft clamp - T40271-

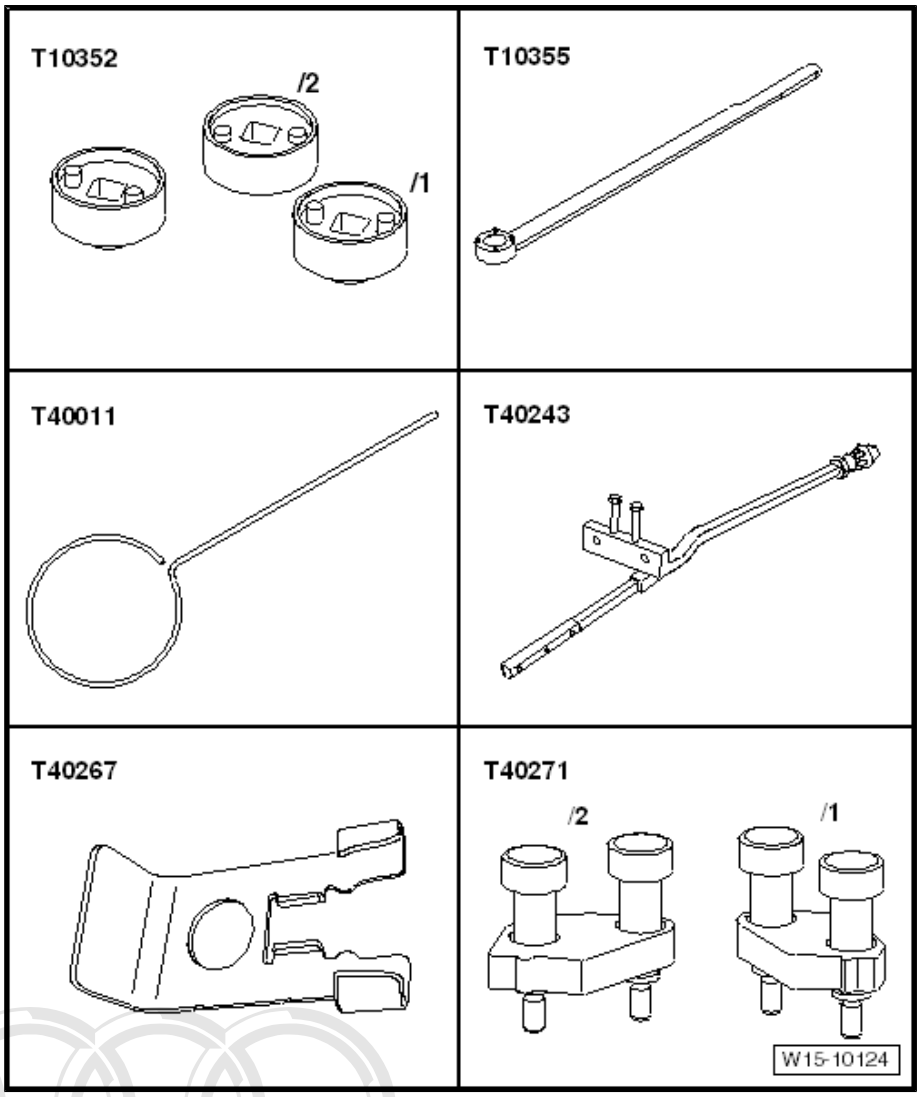

Removing

– Remove timing chain cover (top) ⇒ page 96 .

– Remove bolts -1 and 2- and press coolant pipe (front) to the side.

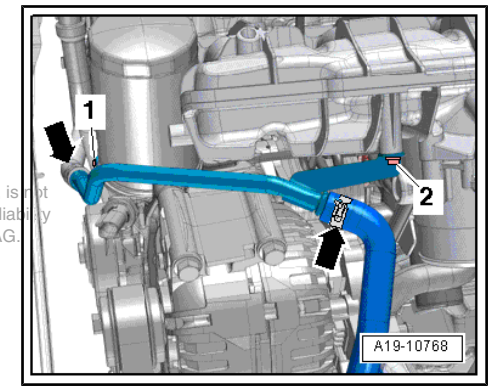

Note

Disregard -arrows-.

Caution

The timing valve has a left-hand thread.

– Depending on version, turn assembly tool - T10352- or assembly tool - T10352/1- in direction of -arrow- to remove timing valve.

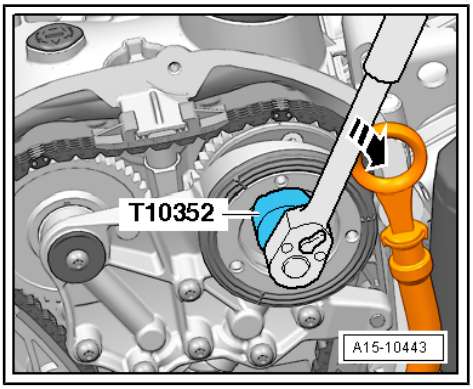

– Remove bolts -arrows- and detach bearing saddle.

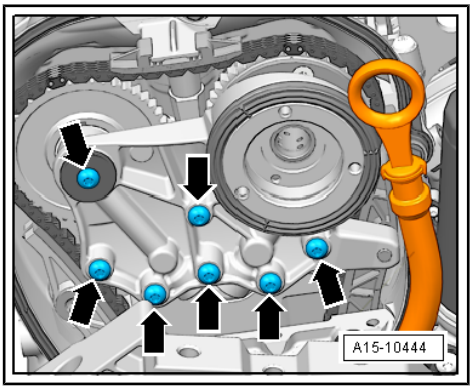

– Turn vibration damper to “TDC” position using counterhold tool - T10355- .

- Notch on vibration damper must align with arrow marking on timing chain cover (bottom) -arrow-.
- The markings -1- on the camshafts must face upwards.

– Remove timing chain cover (bottom) ⇒ page 96.

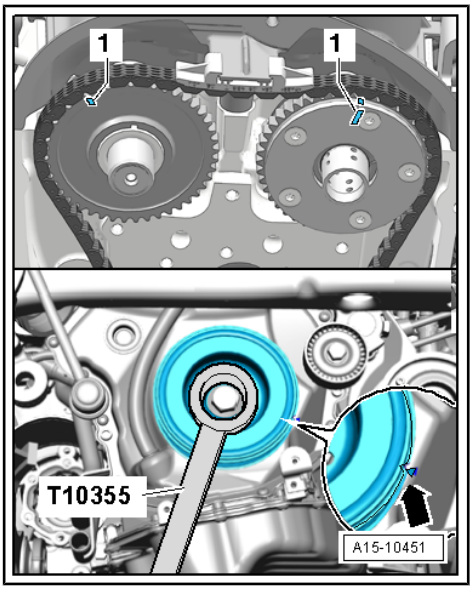

– Press oil pump chain tensioner in direction of -arrow- and lock in place using locking pin - T40011- .

– Remove oil pump chain tensioner -1-.

– Remove oil pump chain.

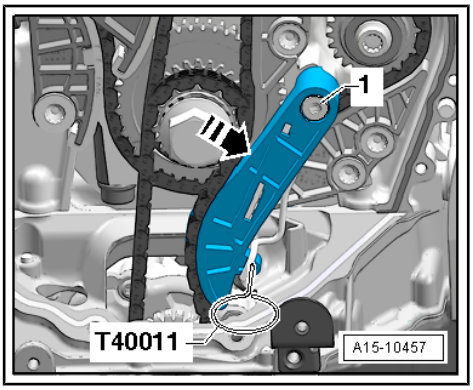

– Remove bolts -arrows-.

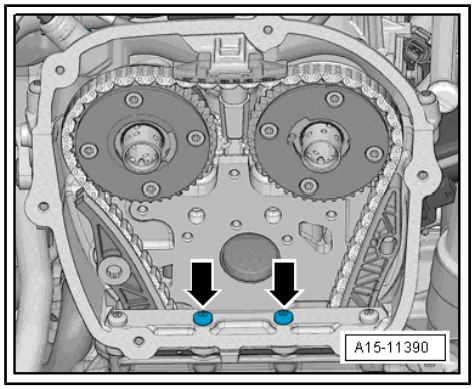

Depending on version, 2 different chain tensioners may be installed.

Version 1

– Screw in assembly lever - T40243- -arrows-.

– Lift locking element for chain tensioner; to do so, insert scriber or suitable screwdriver in hole of chain tensioner in direction of -arrow 1- and hold in place.

– Push assembly lever - T40243- slowly in direction of -arrow 2- and hold in place.

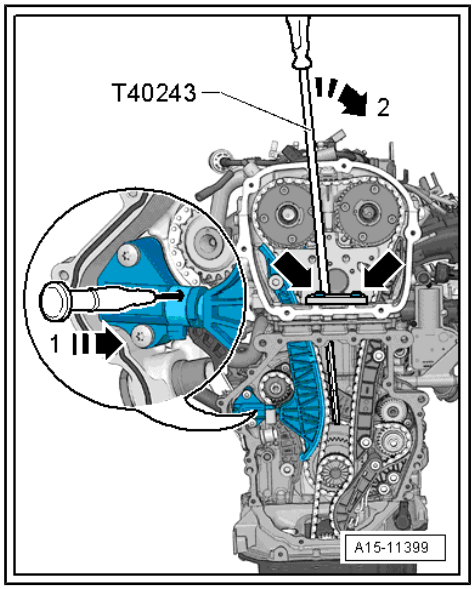

– Hold chain tensioner in position with locking pin - T40011- .

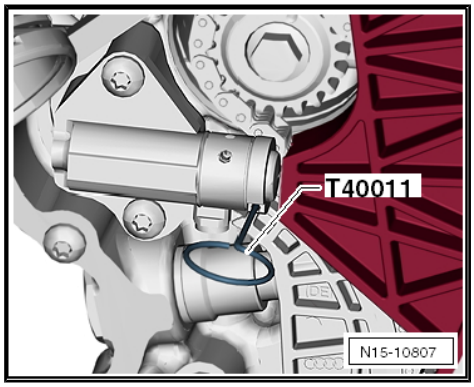

Version 2

– Screw in assembly lever - T40243- -arrows-.
– Compress and hold circlip -1- for chain tensioner.
– Push assembly lever - T40243- slowly in direction of -arrow- and hold in place.

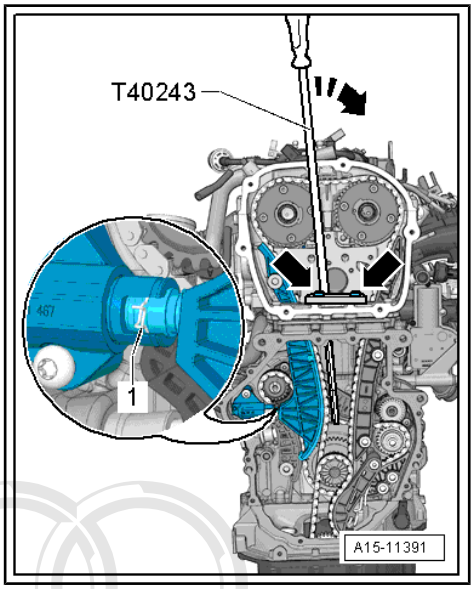

– Hold chain tensioner in position with locking tool - T40267- .

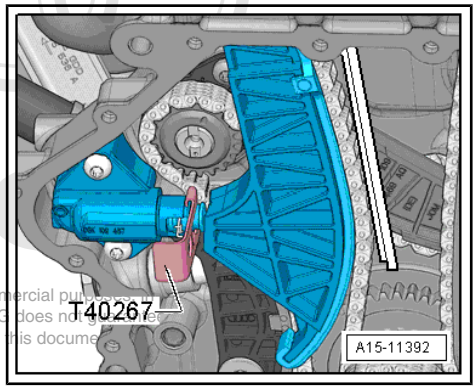

All versions

– Remove assembly lever - T40243- .
– Bolt camshaft clamp - T40271/2- onto cylinder head and slide into teeth on chain sprocket in direction of -arrow 2-; if necessary, use spanner to turn inlet camshaft in direction of -arrow 1-.

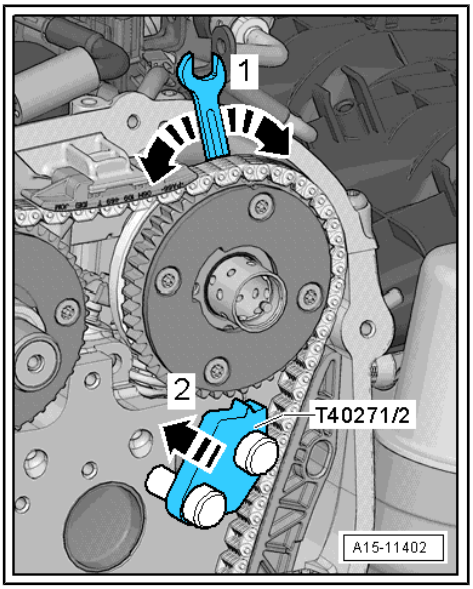

– Remove tensioning rail for timing chain -2-.

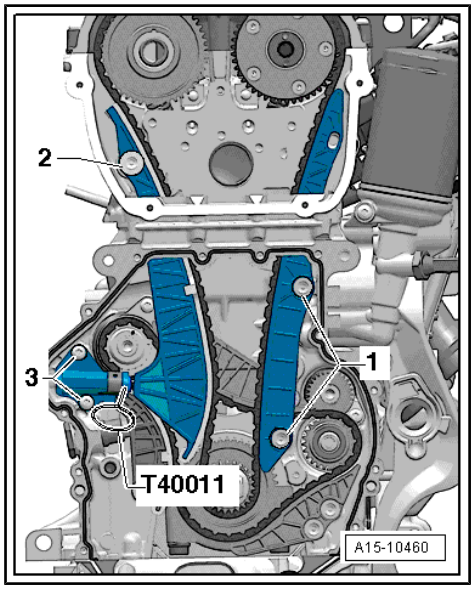

– Bolt camshaft clamp - T40271/1- onto cylinder head.
– Use spanner to turn exhaust camshaft in direction of -arrow 1- and slide camshaft clamp - T40271/1- into teeth on chain sprocket in direction of -arrow 2-.

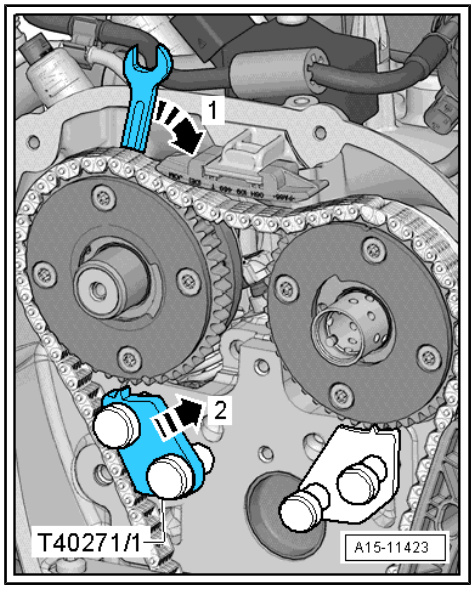

– Use screwdriver to release catch and press off top guide rail -arrow- towards front.

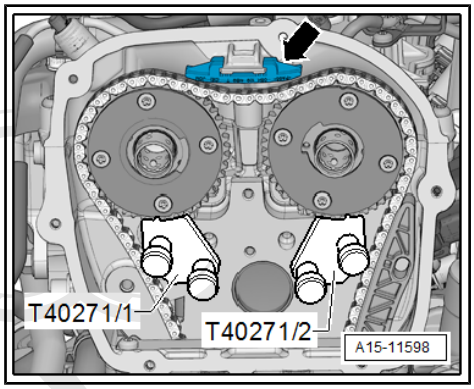

– Remove guide rail for camshaft timing chain -1-.
– Remove timing chain.

Installing

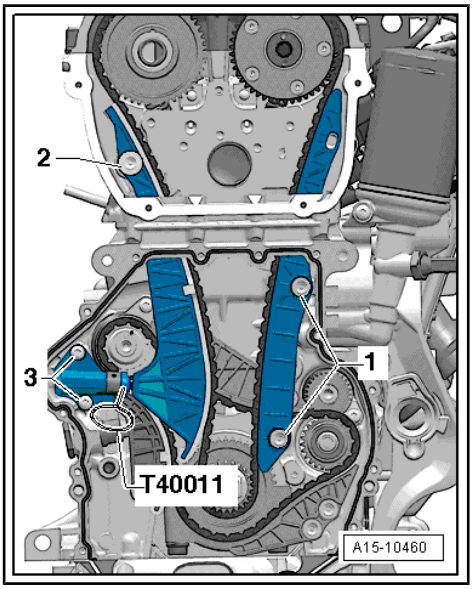

Note

The timing chain links with coloured markings must be positioned at the markings on the chain sprockets.

– Fit timing chain onto inlet camshaft.
– Fit timing chain onto exhaust camshaft.
– Fit timing chain onto crankshaft and hold in place.

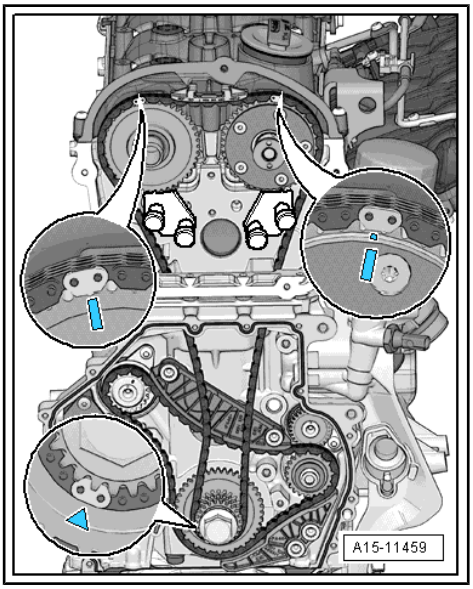

– Fit guide rail for camshaft timing chain and tighten bolts -1-.

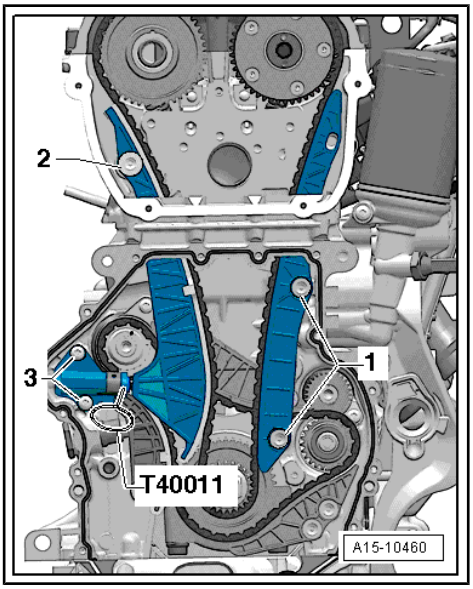

– Install top guide rail -arrow-.

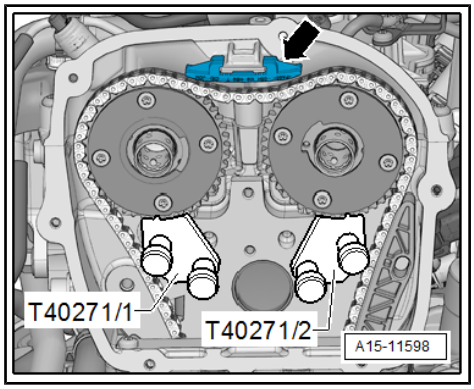

– Turn exhaust camshaft in direction of -arrow 1- and slide camshaft clamp - T40271/1- out of teeth on chain sprocket in direction of -arrow 2- and release camshaft.

– Remove camshaft clamp - T40271/1- .

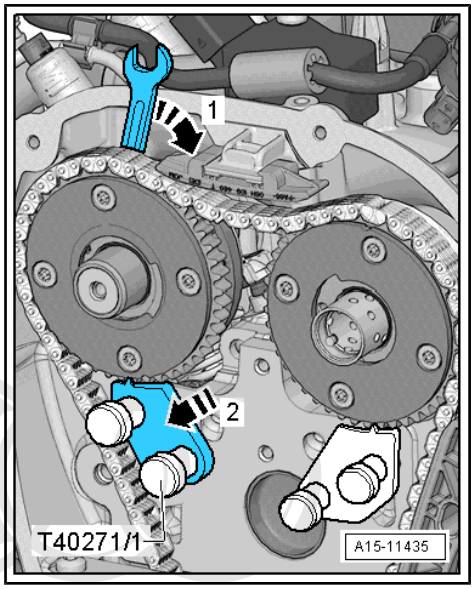

– Fit tensioning rail for timing chain and tighten bolt -2-.

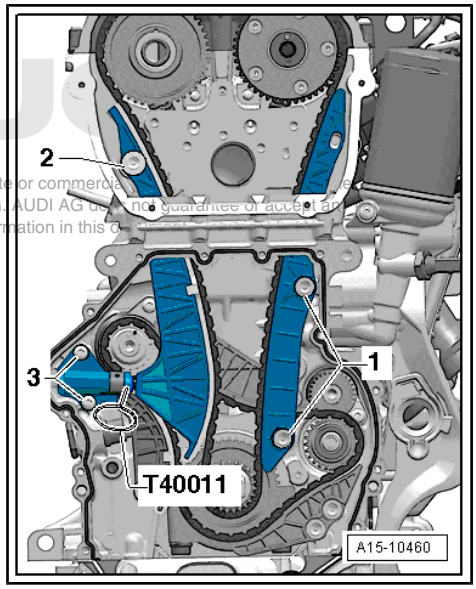

– Turn inlet camshaft in direction of -arrow 1- and slide camshaft clamp - T40271/2- out of teeth on chain sprocket in direction of -arrow 2- and release camshaft.

– Remove camshaft clamp - T40271/2- .

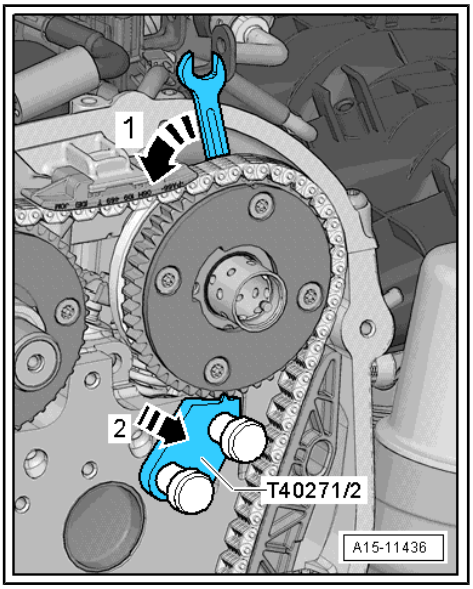

– Check that timing chain links with coloured markings are aligned with markings on chain sprockets.

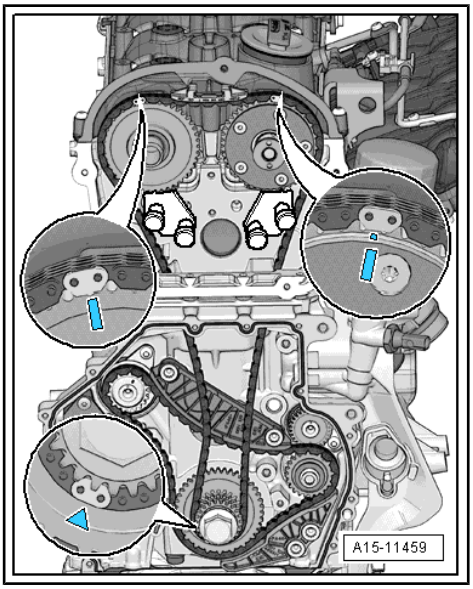

– Install drive chain for oil pump and chain tensioner. Tighten bolt -1- and remove locking pin - T40011- .

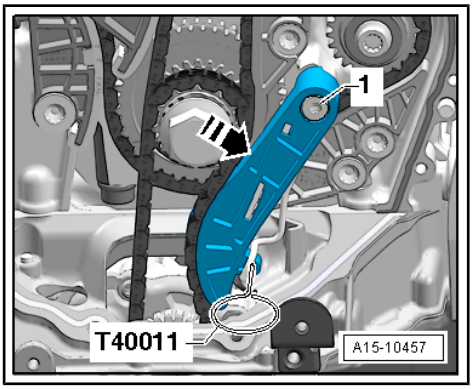

– Fit and tighten bolts -arrows-.

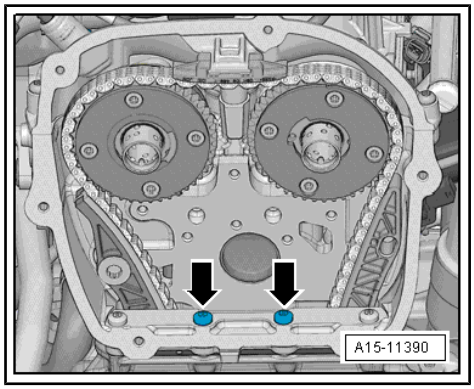

– Attach bearing saddle and screw in bolts -arrows- hand-tight.
– Depending on version, remove locking pin - T40011- or locking tool - T40267- .
– Tighten bolts -arrows- for bearing saddle ⇒ page 101 .
– Install timing valve ⇒ Item 6 (page 101) .

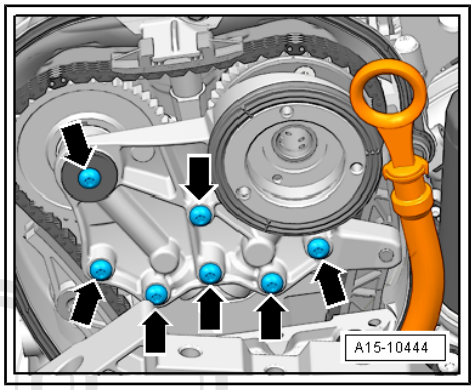

Further assembly is basically carried out in reverse order of dismantling. Note the following:

– Install timing chain cover (bottom) ⇒ page 96 .
– Install timing chain cover (top) ⇒ page 96 .

Tightening torques

◆ ⇒ “2.1 Exploded view - camshaft timing chains”, page 101 .
◆ ⇒ “3.1 Exploded view - coolant pipes”, page 213

2.4 Removing and installing drive chain for balance shaft

Removing

– Remove timing chain cover (top) ⇒ page 96 .
– Remove timing chain cover (bottom) ⇒ page 96 .
– Remove camshaft timing chain ⇒ page 104 .
– Remove chain tensioner for camshaft timing chain -3-.

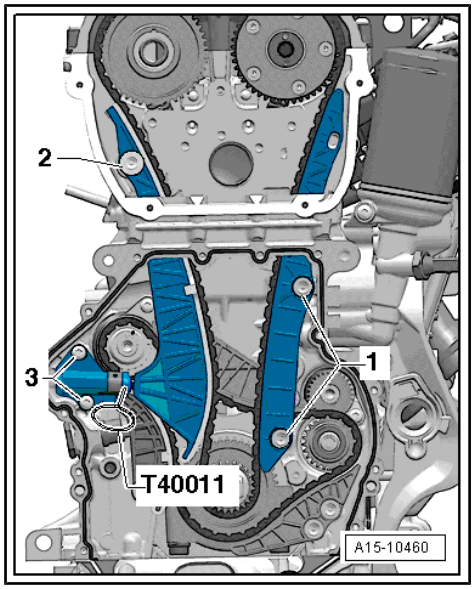

– Remove chain tensioner for balance shaft timing chain -1-.
– Remove tensioning rail -2-.
– Remove guide rail -3-.
– Remove guide rail -4-.
– Remove timing chain.

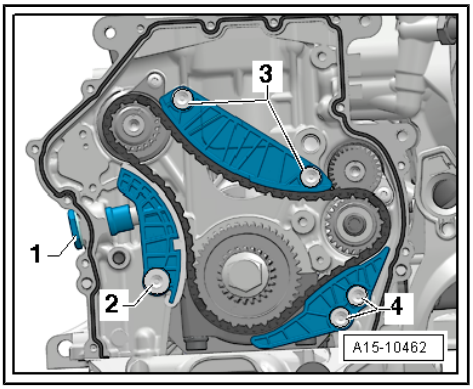

Installing

– Turn idler gear/balance shaft to markings -arrow-.

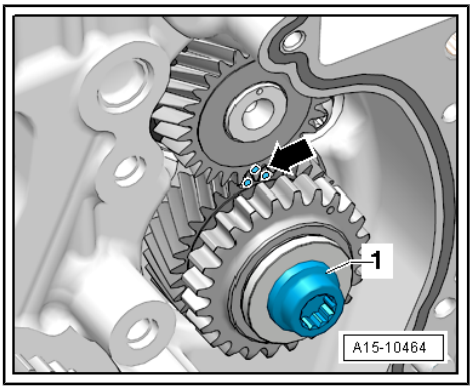

Note

The timing chain links with coloured markings must be positioned at the markings on the chain sprockets.

– Fit timing chain; the timing chain links with coloured markings must be positioned at the markings on the chain sprockets.

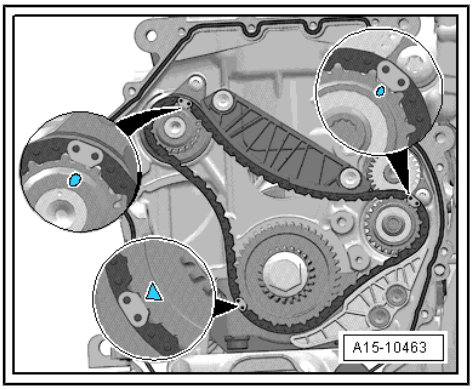

– Fit guide rail for timing chain and tighten bolts -4-.
– Fit guide rail for timing chain and tighten bolts -3-.
– Fit tensioning rail for timing chain and tighten bolt -2-.
– Apply sealant to seal of chain tensioner -1-; for sealant, refer to ⇒ Electronic parts catalogue (ETKA) .
– Screw in chain tensioner for timing chain -1-.

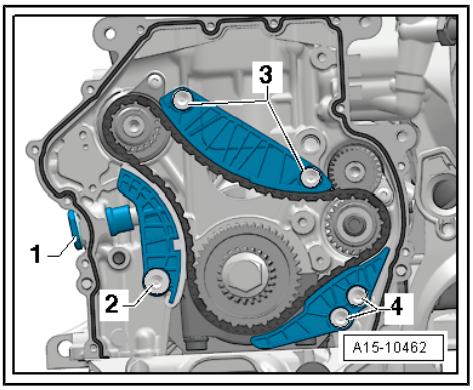

– Check adjustment again.

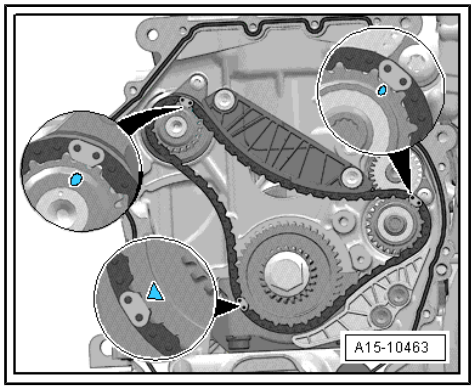

– Check markings on idler gear/balance shaft -arrow-.

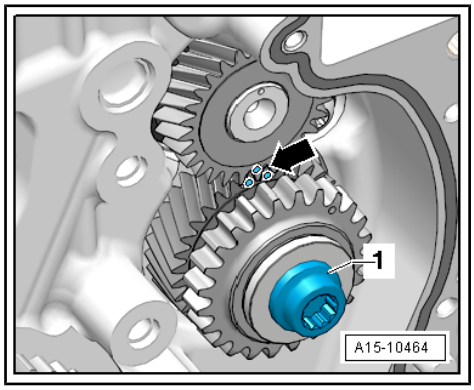

Note

For illustration purposes, the markings on the idler gear/balance shaft are shown with the chain removed.

Further assembly is basically carried out in reverse order of dismantling. Note the following:

– Install camshaft timing chain ⇒ page 104 .

– Install timing chain cover (bottom) ⇒ page 96 .

– Install timing chain cover (top) ⇒ page 96 .

Tightening torques

♦ ⇒ “2.2 Exploded view - drive chain for balance shaft”, page 102

2.5 Checking valve timing

Special tools and workshop equipment required

♦ Dial gauge set, 4-part - VAS 6341-

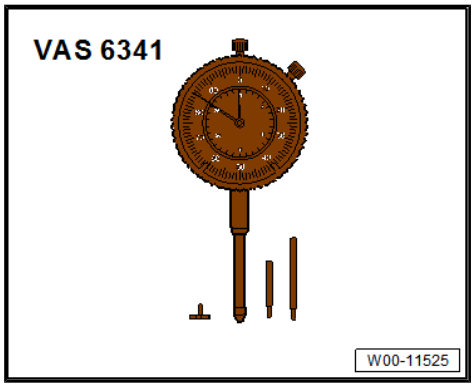

- Adapter for dial gauge - T10170 A-

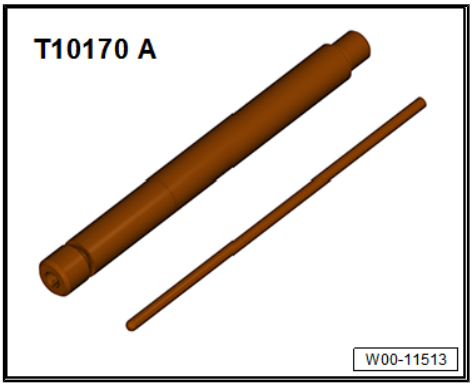

Procedure

– Remove timing chain cover (top) ⇒ page 96 .

– Remove noise insulation ⇒ General body repairs, exterior; Rep. gr. 66 ; Noise insulation; Removing and installing noise insulation .

– Using 24 mm socket, turn crankshaft via vibration damper in normal direction of rotation until markings -arrows- are almost at top.

– Remove spark plug on cylinder 1.

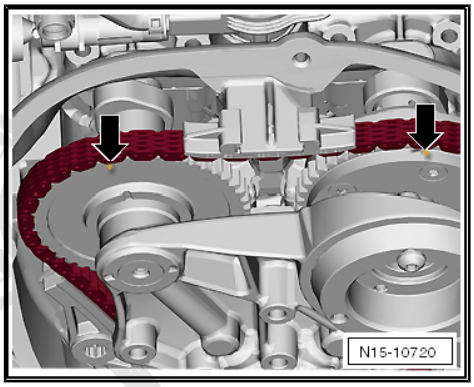

– Screw dial gauge adapter - T10170 A- into spark plug thread as far as stop.

– Insert dial gauge - VAS 6079- with extension - T10170A/1- as far as stop and secure with locking nut -arrow-.

– Turn crankshaft slowly in normal direction of engine rotation until needle in dial gauge has moved to maximum position. When needle has moved to maximum position (i.e. turning point in dial gauge), piston is at »TDC«.

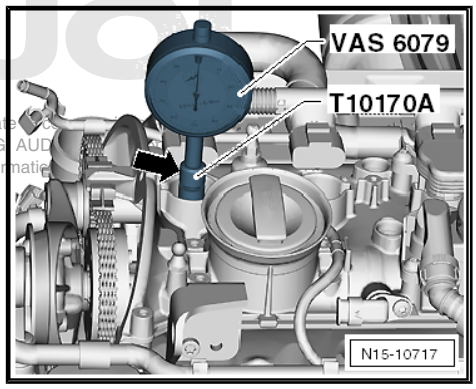

Note

- *To turn the vibration damper, use a ratchet with 24 mm socket.*
- *If the crankshaft has been turned beyond the "TDC" position, it must again be turned two rotations in normal direction of engine rotation. Do not turn engine in opposite direction to normal rotation.*

– Measure distance from left outer edge of rib -1- to marking -2- on inlet camshaft.

• Specification: 61 … 64 mm.

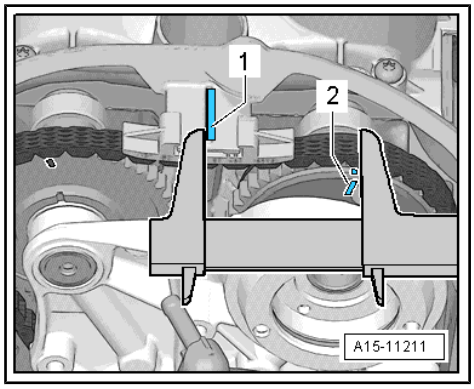

– If specification is obtained, measure distance between marking on exhaust camshaft -3- and marking on inlet camshaft -4-.

• Specification: 124 … 126 mm.

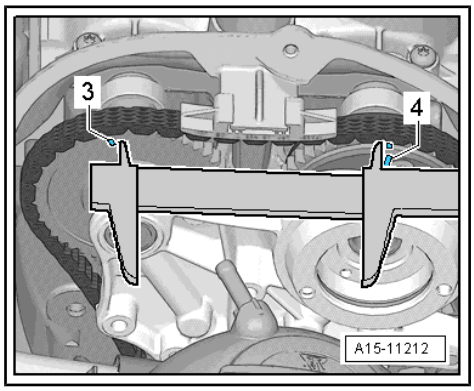

Note

If the timing chain is one tooth out of position, this results in a deviation of approx. 6 mm from specification. The timing chain must be refitted if it is not in the correct position.

• Notch on vibration damper must align with arrow marking on timing chain cover (bottom) -arrow-.

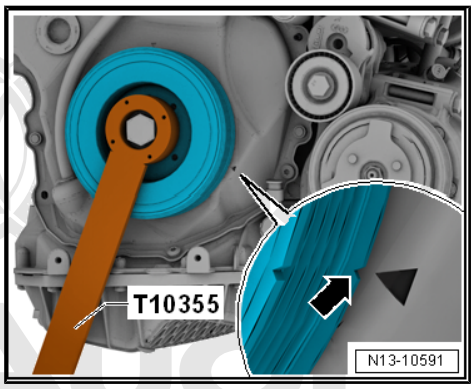

3 Cylinder head

⇒ "3.1 Exploded view - cylinder head", page 117
⇒ "3.2 Removing and installing cylinder head", page 120
⇒ "3.3 Checking compression", page 131

3.1 Exploded view - cylinder head

Note

- *Renew the cylinder head bolts.*
- *During assembly, renew oil seals and gaskets as well as self-locking nuts and bolts that are tightened by turning through to a specified angle.*
- *The plastic protectors fitted to protect the open valves must only be removed immediately before fitting the cylinder head.*
- *After fitting a new cylinder head or cylinder head gasket, change the engine oil and coolant.*

1 - Cylinder head gasket
- ❑ Renew
- ❑ Note installation position: part number must face cylinder head

2 - Bolt
- ❑ 25 Nm

3 - Transport plate

4 - Bolt
- ❑ Renew
- ❑ Note procedure when loosening ⇒ page 119
- ❑ Note procedure when tightening ⇒ page 120

5 - Cylinder head
- ❑ Removing and installing ⇒ page 120
- ❑ Checking for distortion ⇒ page 119

6 - Cylinder head bolt
- ❑ Renew
- ❑ Note procedure when loosening ⇒ page 119
- ❑ Note procedure when tightening ⇒ page 120

7 - O-ring
- ❑ Renew
- ❑ Lubricate with engine oil

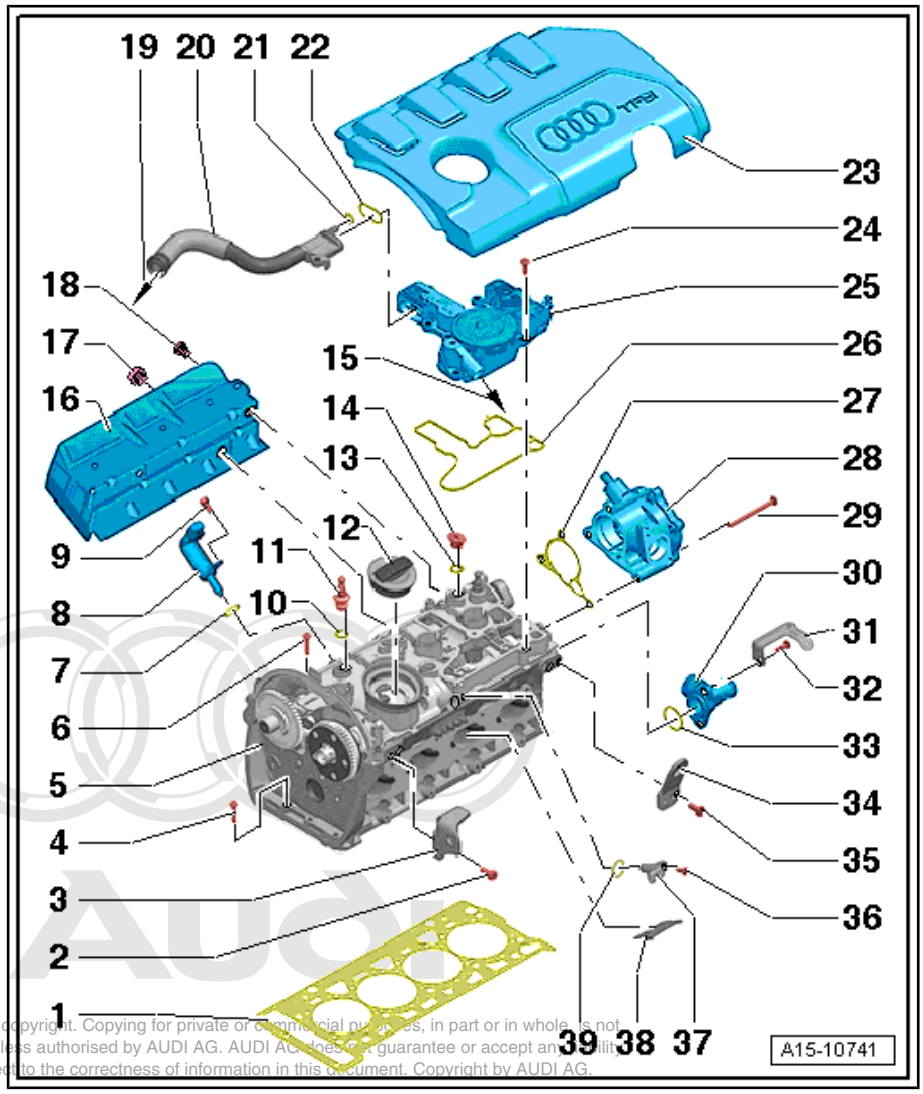

8 - Actuator for camshaft adjustment

9 - Bolt
- ❑ 5 Nm

10 - O-ring
- ❑ Renew
- ❑ Lubricate with engine oil

11 - Sealing plug
- ❑ 5 Nm
- ❑ With ball head for engine cover panel

12 - Filler cap
- ❑ With seal

13 - O-ring
- ❑ Renew
- ❑ Lubricate with engine oil

14 - Sealing plug

15 - To intake manifold

16 - Heat shield

17 - Bolt
- ❑ 20 Nm

18 - Bolt
- ❑ 20 Nm

19 - To intake manifold/turbocharger

20 - Breather pipe

21 - O-ring
- ❑ Not available as replacement part

22 - Seal
- ❑ Not available as replacement part

23 - Engine cover panel

24 - Bolt
- ❑ Tightening sequence ⇒ page 119

25 - Crankcase breather

26 - Gasket
- ❑ Renew if damaged

27 - Gasket
- ❑ Renew if damaged

28 - Vacuum pump
- ❑ Removing and installing ⇒ Brake system; Rep. gr. 47 ; Vacuum system; Removing and installing vacuum pump

29 - Bolt
- ❑ Tightening torque ⇒ Brake system; Rep. gr. 47 ; Vacuum system; Exploded view - vacuum pump

30 - Connection

31 - Bracket

32 - Bolt
- ❑ 9 Nm

33 - O-ring

- ❑ Renew
- ❑ Lubricate with coolant

34 - Transport plate

35 - Bolt

- ❑ 25 Nm

36 - Bolt

- ❑ 9 Nm

37 - Hall sender - G40-

38 - Separating plate

39 - O-ring

- ❑ Renew
- ❑ Lubricate with engine oil

Crankcase breather system - tightening torque

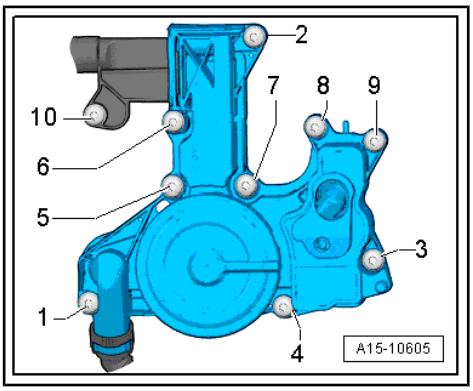

Note

- ♦ *The bolts are thread-forming bolts. When renewing the cylinder head, it is important that you use only genuine bolts since the cylinder head is supplied without threaded holes for attachment of the crankcase breather.*
- ♦ *Do NOT make threaded holes using a thread tap.*

– Tighten bolts for crankcase breather system in the sequence -1 ... 10- to 11 Nm.

Checking cylinder head for distortion

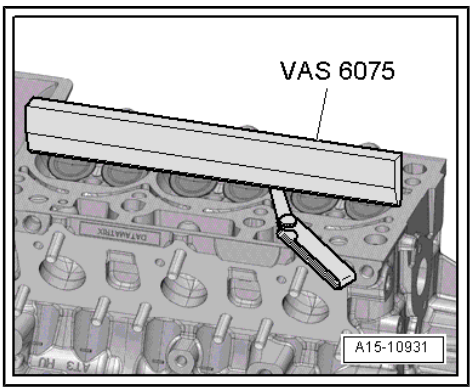

– Use straight edge 500 mm - VAS 6075- and feeler gauge to measure cylinder head for distortion at several points.

♦ Max. permissible distortion: 0.05 mm

Slackening cylinder head bolts

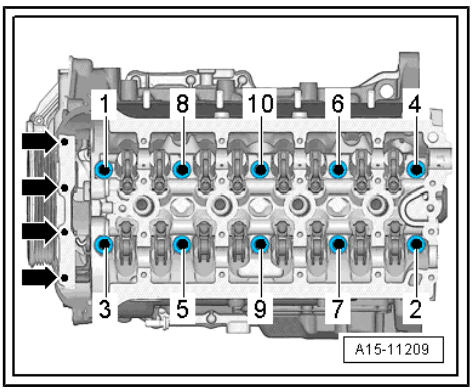

– Remove bolts -arrows-.

– Slacken cylinder head bolts in the sequence -1 ... 10-.

Tightening sequence for cylinder head

– Tighten cylinder head bolts in the sequence -1 ... 10- as follows:

1. Tighten with torque wrench initially to 40 Nm.
2. Use rigid wrench to turn 90° further.
3. Use rigid wrench to turn 90° further.
4. Pre-tighten bolts -arrows- to 8 Nm.
5. Turn bolts -arrows- 90° further using a rigid wrench.

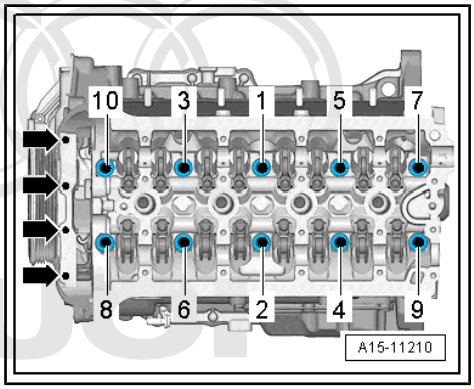

3.2 Removing and installing cylinder head

Special tools and workshop equipment required

♦ Engine bung set - VAS 6122-

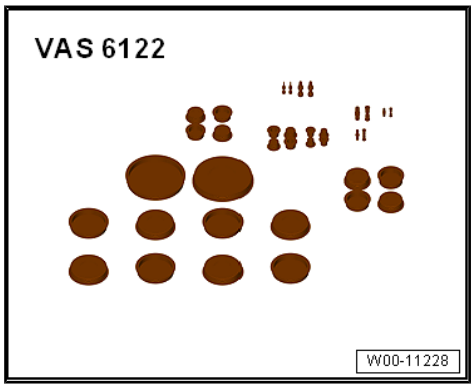

♦ Special wrench (Polydrive) - T10070-

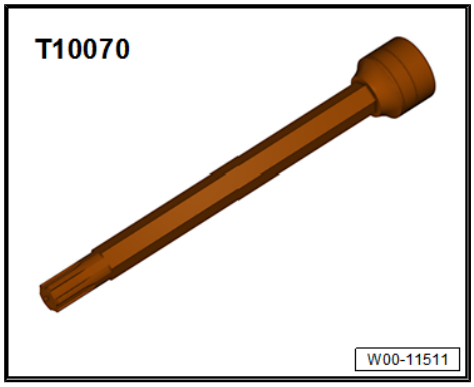

Removing

Note

For all work on vehicles with high-voltage system, note additional warnings for working on such vehicles ⇒ page 2 and ⇒ Electrical system, hybrid; Rep. gr. 93 ; General warning instructions for work on the high-voltage system .

WARNING

Safety hazard: the engine can start unexpectedly.

Before carrying out general work on a vehicle with high-voltage electrical system, switch off the ignition and remove the ignition key from the vehicle.

WARNING

Working on vehicles with high-voltage wiring:

- *Do not support yourself or tools on high-voltage wiring or associated components --> this can damage the insulation.*
- *High-voltage wiring must not be excessively bent or kinked --> this can damage the insulation.*
- *The round high-voltage connectors are colour-coded with an external coloured ring and are provided with mechanical coding or guide lugs. It is important to observe this coding when joining up the round high-voltage connectors, otherwise the connectors can be damaged.*

DANGER!

Risk of fatal injury if high-voltage components are damaged.

Observe the following when working in the vicinity of high-voltage components or wiring:

- *It is not permitted to use cutting or forming tools, other sharp-edged tools or heat sources such as welding, brazing, soldering, hot air or thermal bonding equipment.*
- *Before starting work, visually inspect the high-voltage components in the areas involved.*
- *Before working in the engine compartment, visually inspect the power and control electronics for electric drive - JX1- , electric drive motor - V141- , air conditioner compressor - V470- and high-voltage wiring.*
- *Before working on the vehicle underbody, visually inspect the high-voltage wiring and covers.*
- *Before working on the rear section of the vehicle, visually inspect the high-voltage wiring and the electro-box with the maintenance connector for high-voltage system - TW - .*
- *Visually inspect all potential equalisation lines.*

Check the following when making the visual inspection:

- *There must be no external damage on any component.*
- *The insulation of the high-voltage wiring and potential equalisation lines must not be damaged.*
- *There must be no unusual deformation of the high-voltage wiring.*
- *All high-voltage components must be identified by a red warning sticker.*

Note

- *Fit cable ties in the original positions when installing.*
- *All open inlet and exhaust ports must be sealed with suitable plugs (e.g. from engine bung set - VAS 6122-).*

– Remove camshafts ⇒ page 135 .

Caution

Avoid damage to valves and piston crowns.

- *Do not turn the crankshaft after the camshafts have been removed.*

– Drain coolant ⇒ page 184 .

– Remove catalytic converter ⇒ page 301 .

DANGER!

High voltage can cause fatal injury.

Danger of severe or fatal injuries from electric shock.

- *The high-voltage system may only be de-energised by a suitably qualified person (Audi high-voltage technician).*
- *It must be definitely confirmed that the high-voltage system is de-energised. The system may only be de-energised using the vehicle diagnostic tester via "Guided Fault Finding".*
- *The qualified person (Audi high-voltage technician) confirms that the system is de-energised and uses the locking cap - T40262- to ensure that the system cannot be re-energised. The ignition key and the maintenance connector for high-voltage system - TW - are then stored in a safe place by the qualified person.*
- *The qualified person (Audi high-voltage technician) marks the vehicle by attaching the appropriate warning signs.*

Note

- *De-energising high-voltage system:*
- *Connect vehicle diagnostic tester*
- *Select* `Guided Fault Finding` *mode*
- *Using the* `Go To` *button, select the following menu options in succession:*
- `Selecting function/component`
- `Body`
- `Electrical system`
- `Self-diagnosis compatible systems`
- `8C - Hybrid battery management -J840`
- `8C - Hybrid battery management, functions`
- `51 - De-energise high-voltage system (Rep. gr. 93)`

– Remove electrical air conditioner compressor -V470- from bracket for ancillaries and tie up to left side ⇒ Heating, air conditioning; Rep. gr. 87 ; Air conditioner compressor; Detaching and attaching air conditioner compressor at bracket .

WARNING

Risk of injury caused by refrigerant.

- *The air conditioner refrigerant circuit must not be opened.*

Caution

Danger of damage to refrigerant lines and hoses.

- *Do NOT stretch, kink or bend refrigerant lines and hoses.*

– Lift retaining clips -arrows- and disconnect coolant hoses.

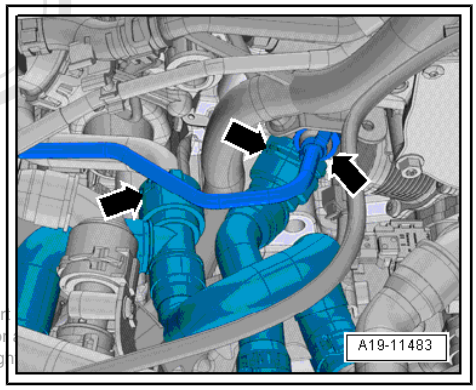

Vehicles with secondary air system:

– Unplug electrical connectors -arrows-.

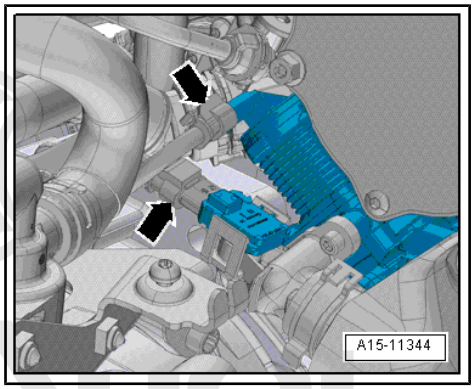

All vehicles (continued):

WARNING

Risk of injury caused by fuel.

- *To allow the fuel pressure to dissipate, wrap a clean cloth around the connection and carefully loosen the connection before opening the fuel system.*

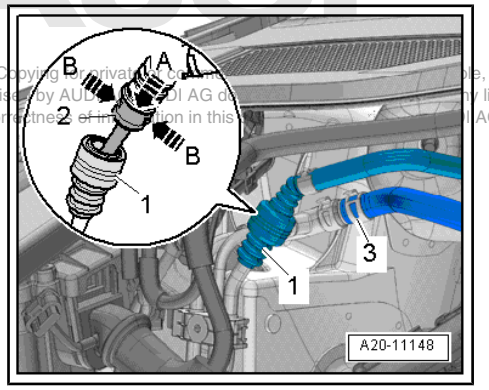

Caution

Risk of damage caused by particles of dirt.

- *Rules for cleanliness when working on the injection system* *⇒ page 13* *.*

– Push down protective sleeve -1- and disconnect fuel line.

– First press hose connector -2- downwards -arrow A-, then press release tabs -arrow B-.

– Pull off hose connector, keeping release tabs depressed.

– Release hose clip -3- and detach hose for activated charcoal filter.

– Unplug the following electrical connectors:

1 - From intake air temperature sender - G42-

2 - From knock sensor 1 - G61- (unplug and move clear).

3 - From pressure sensor for activated charcoal filter system - G804-

4 - From activated charcoal filter solenoid valve 1 - N80-

5 - From intake manifold flap valve - N316- , fuel pressure sender - G247- and Hall sender - G40-

6 - From injectors

7 - From throttle valve module - J338-

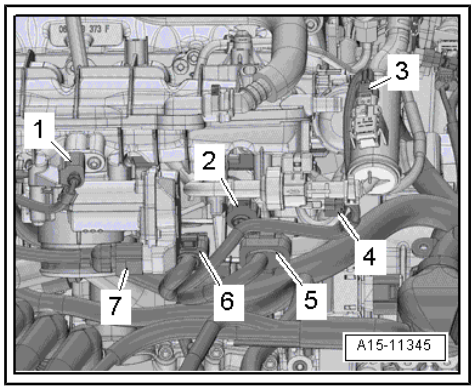

Note

Place a cloth under coolant pipe to catch escaping coolant.

– Unscrew bolts -1- and -2- and swivel coolant pipe (front) upwards.

– Release hose clip -left arrow- and detach coolant hose.

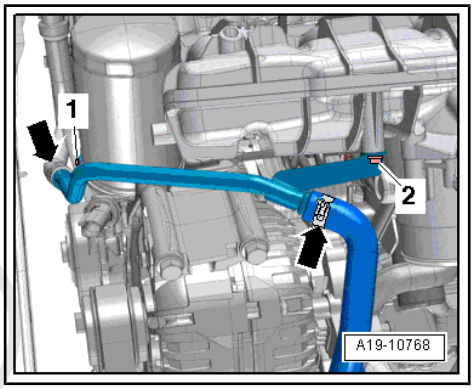

– Remove support for intake manifold (remove securing nut -1- and bolt -2-).

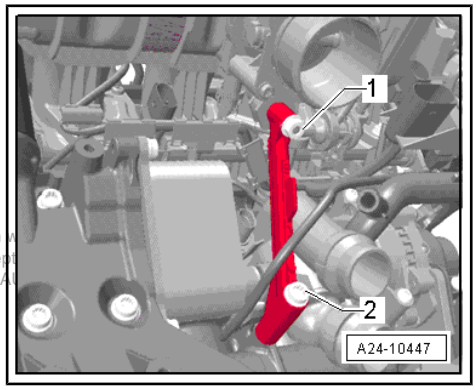

– Remove bolts -3-.

– Unscrew banjo bolts -1- and -2- and move lines to the side.

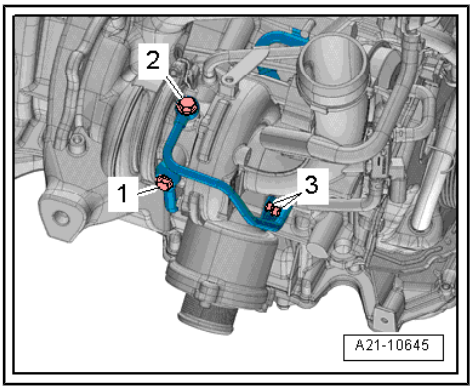

– Unplug electrical connectors -1 and 2- at oil pressure switch - F22- and oil pressure switch for reduced oil pressure - F378- .

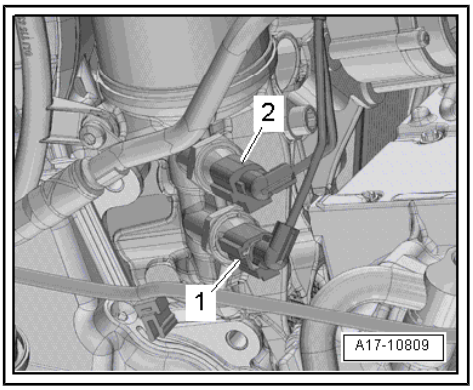

– Open hose clip -2-, detach air hose and swivel to side.

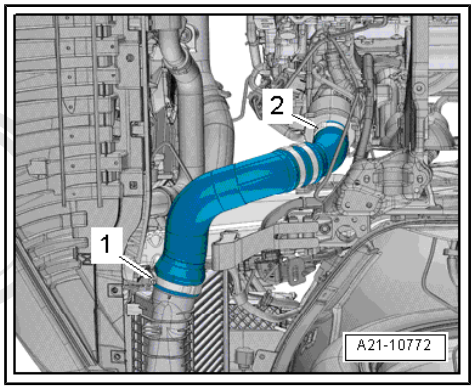

Vehicles with secondary air system:

– Remove bolt -1-.

– Press release tabs -2- and detach resonator.

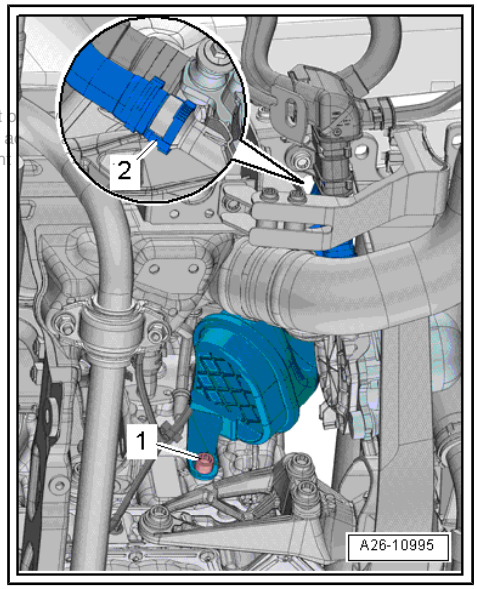

All vehicles (continued):

– Unplug electrical connectors -1 and 2- and move wiring clear.

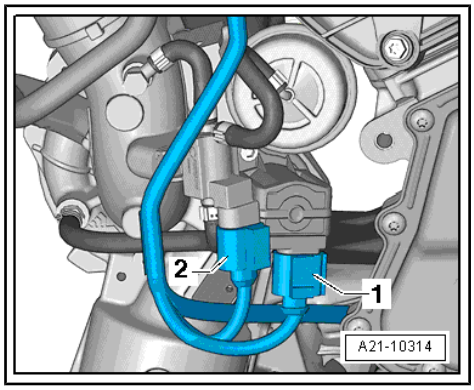

– Unplug connector from oil level and oil temperature sender - G266- -arrow- and move wiring clear.

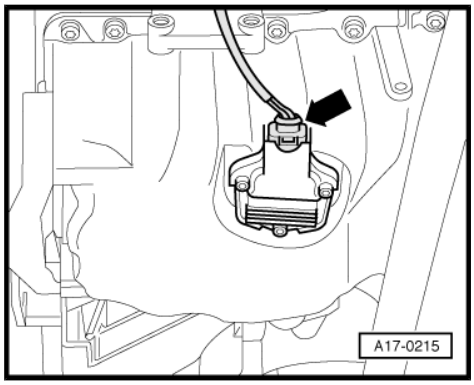

– Unplug electrical connectors and move wiring clear:

1 - For left electrohydraulic engine mounting solenoid valve - N144-

2 - For charge pressure sender - G31-

3 - For secondary air pump motor - V101-

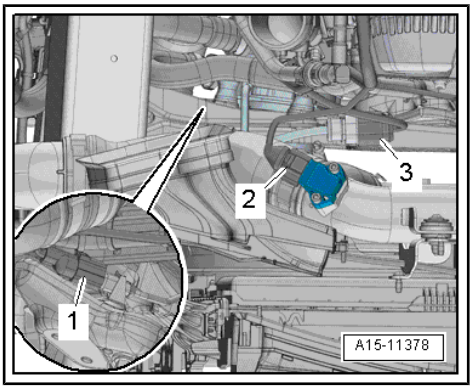

– Loosen bolt -1-.

– Remove bolt -2-.

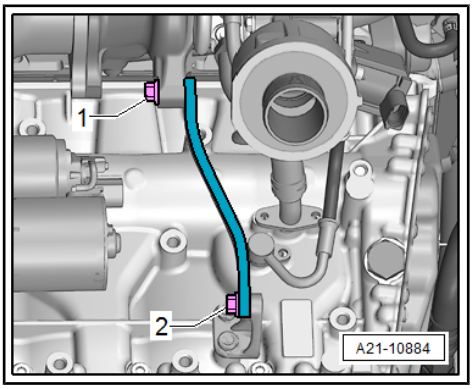

– Remove bolts -arrows- at oil return line.

– Remove spark plugs with spark plug spanner - 3122 B- .

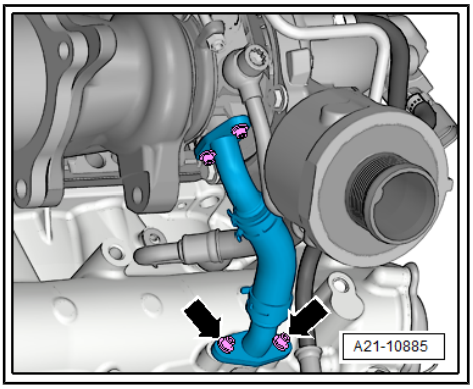

– Remove bolts -arrows-.

– Use special wrench (Polydrive) - T10070- to slacken cylinder head bolts in the sequence -1 ... 10-.

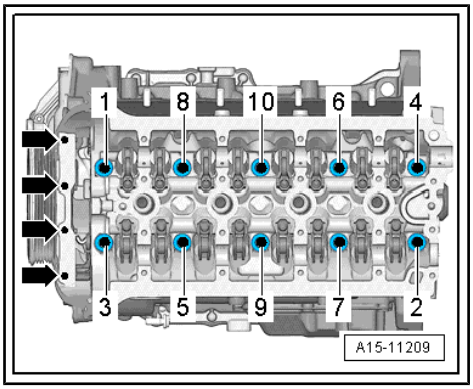

Note

- *Make sure all hoses/pipes and wiring on component are disconnected.*
- *Make sure tensioning rail and guide rail are not damaged when lifting off cylinder head.*

– Take off cylinder head.

– Place cylinder head onto soft surface (foam plastic).

Installing

Caution

Avoid damage to sealing surfaces.

- *Carefully remove sealant residue from cylinder head and cylinder block.*
- *Ensure that no long scores or scratches are made on the surfaces.*

Avoid damage to cylinder block.

- *No oil or coolant must be allowed to remain in the blind holes for the cylinder head bolts in the cylinder block.*

Ensure that cylinder head gasket seals properly:

- *Carefully remove any remaining emery and abrasive material.*
- *Do not remove new cylinder head gasket from packaging until it is ready to be fitted.*
- *Handle the cylinder head gasket very carefully to prevent damage to the silicone coating or the indented area of the gasket.*

Avoid damage to open valves.

- *When installing an exchange cylinder head, the plastic protectors fitted to protect the open valves should not be removed until the cylinder head is ready to be fitted.*

Avoid damage to valves and piston crowns after working on valve gear.

- *Turn the engine carefully at least 2 rotations to ensure that none of the valves make contact when the starter is operated.*

Note

- *Renew the bolts tightened with specified tightening angle.*
- *Renew seals, gaskets and self-locking nuts.*
- *Note the different sealants for sealing surfaces and cylinder head bolts.*
- *When installing an exchange cylinder head, the contact surfaces between the hydraulic compensation elements, roller rocker fingers and cams must be oiled before installing the camshafts.*
- *Hose connections and air pipes and hoses must be free of oil and grease before assembly.*
- *Secure all hose connections with the correct type of hose clips (same as original equipment) ⇒ Electronic parts catalogue .*
- *To ensure that the charge air hoses can be properly secured at their connections, spray rust remover onto the worm thread of used hose clips before installing.*
- *After fitting a new cylinder head or cylinder head gasket, change the engine oil and coolant.*

– Place cylinder head gasket in position.
- Note position of centring pins in cylinder block -arrows-.
- Note installation position of cylinder head gasket. Part No. should be legible from inlet side.

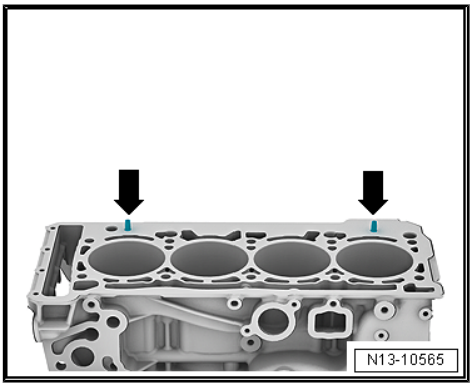

WARNING

Make sure that components are not damaged by the timing chain when rotating the crankshaft.

– If crankshaft has been rotated: set No. 1 cylinder piston to top dead centre and then turn crankshaft back slightly.
– Fit cylinder head.
– Insert and hand-tighten cylinder head bolts.
– Tightening sequence for cylinder head
⇒ Fig. ""Tightening sequence for cylinder head"" , page 120

Note

Cylinder head bolts do not have to be torqued down again later after repair work.

– Turn vibration damper to “TDC” position -arrow- using counterhold tool - T10355- .

• Notch on vibration damper must align with arrow marking on timing chain cover (bottom) -arrow-.

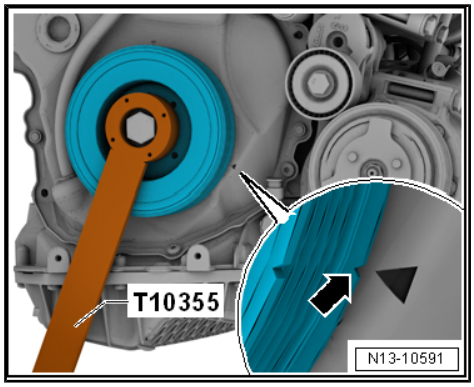

The remaining installation steps are carried out in the reverse sequence. Note the following points:

– Install support for intake manifold ⇒ page 259 .

– Install camshafts ⇒ page 135 .

– Install timing chain cover (top) ⇒ page 96 .

– Install electrical air conditioner compressor -V470- ⇒ Heating, air conditioning; Rep. gr. 87 ; Air conditioner compressor; Detaching and attaching air conditioner compressor at bracket .

– Electrical connections and routing ⇒ Electrical system, hybrid; Rep. gr. 93 ; High-voltage wiring; Overview of fitting locations - high-voltage wiring , ⇒ Electrical system; Rep. gr. 97 ; Relay carriers, fuse carriers, electronics boxes and ⇒ Current flow diagrams, Electrical fault finding and Fitting locations.

Re-energising the high-voltage system

DANGER!

High voltage can cause fatal injury.

Danger of severe or fatal injuries from electric shock.

- *The high-voltage system may only be re-energised by a suitably qualified person (Audi high-voltage technician).*
- *The system may only be re-energised using the vehicle diagnostic tester via “Guided Fault Finding”.*
- *The vehicle is then made ready for operation again by the qualified person (Audi high-voltage technician).*
- *The qualified person (Audi high-voltage technician) marks the vehicle by attaching the appropriate warning signs.*

Note

- *Re-energising high-voltage system:*
- *Connect vehicle diagnostic tester*
- *Select* `Guided Fault Finding` *mode*
- *Using the* `Go To` *button, select the following menu options in succession:*
- `Selecting function/component`
- `Body`
- `Electrical system`
- `Self-diagnosis compatible systems`
- `8C - Hybrid battery management -J840`
- `8C - Hybrid battery management, functions`
- `51 - Re-energise high-voltage system (Rep. gr. 93)`

– Install catalytic converter ⇒ page 301 .

– Change engine oil ⇒ Maintenance ; Booklet 410 .

WARNING

Never use battery charging equipment for boost starting. There is danger of damaging the vehicle's control units.

– Fill cooling system with fresh coolant ⇒ page 184 .

Tightening torques

- ⇒ “3.1 Exploded view - cylinder head”, page 117 .
- ⇒ “3.1 Exploded view - coolant pipes”, page 213 .
- ⇒ “1.1 Exploded view - turbocharger”, page 229 .
- ⇒ “1.1 Exploded view - silencers”, page 293
- ⇒ “3.1 Exploded view - secondary air system”, page 306 .

3.3 Checking compression

Special tools and workshop equipment required

- Spark plug socket and extension - 3122 B-

- Compression tester - V.A.G 1763-

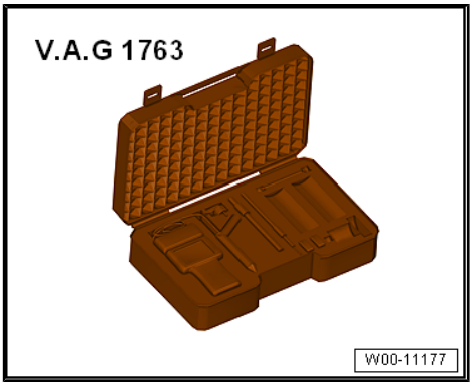

Test sequence

Note

- *Engine oil temperature at least 30 °C*
- *Battery voltage at least 12.7 V*

– Remove engine cover panel ⇒ page 54 .

– Remove ignition coils with output stages ⇒ page 310 .

– Remove spark plugs with spark plug spanner - 3122 B- .

– Check compression pressure with compression tester - V.A.G 1763- and adapter - V.A.G 1763/6- .

Note

Using the compression tester ⇒ Operating instructions .

– Operate starter until pressure reading on tester no longer rises.

Compression pressure:

New pressure in bar	Wear limit in bar	Permissible difference between cylinders in bar
11.0 ... 14.0	7.0	3.0 (maximum)

– Install spark plugs ⇒ Maintenance ; Booklet 410 .

– Install ignition coils with output stages ⇒ page 310 .

Note

Faults will have been stored in the memory because connectors have been unplugged. Interrogate and, if necessary, erase event memory after completing the check.

– Erase any entries in event memory resulting from testing ⇒ Vehicle diagnostic tester, `Guided Functions`, `Interrogate event memory`, then `Generate readiness code`.

4 Valve gear

4.1 Exploded view - valve gear

Note

- *Cylinder head and cylinder head cover must be renewed together.*
- *After installing camshafts, wait for approx. 30 minutes before starting engine. The hydraulic compensation elements must settle (otherwise valves will strike pistons).*
- *After working on the valve gear, turn the engine carefully at least 2 rotations to ensure that none of the valves make contact when the starter is operated.*

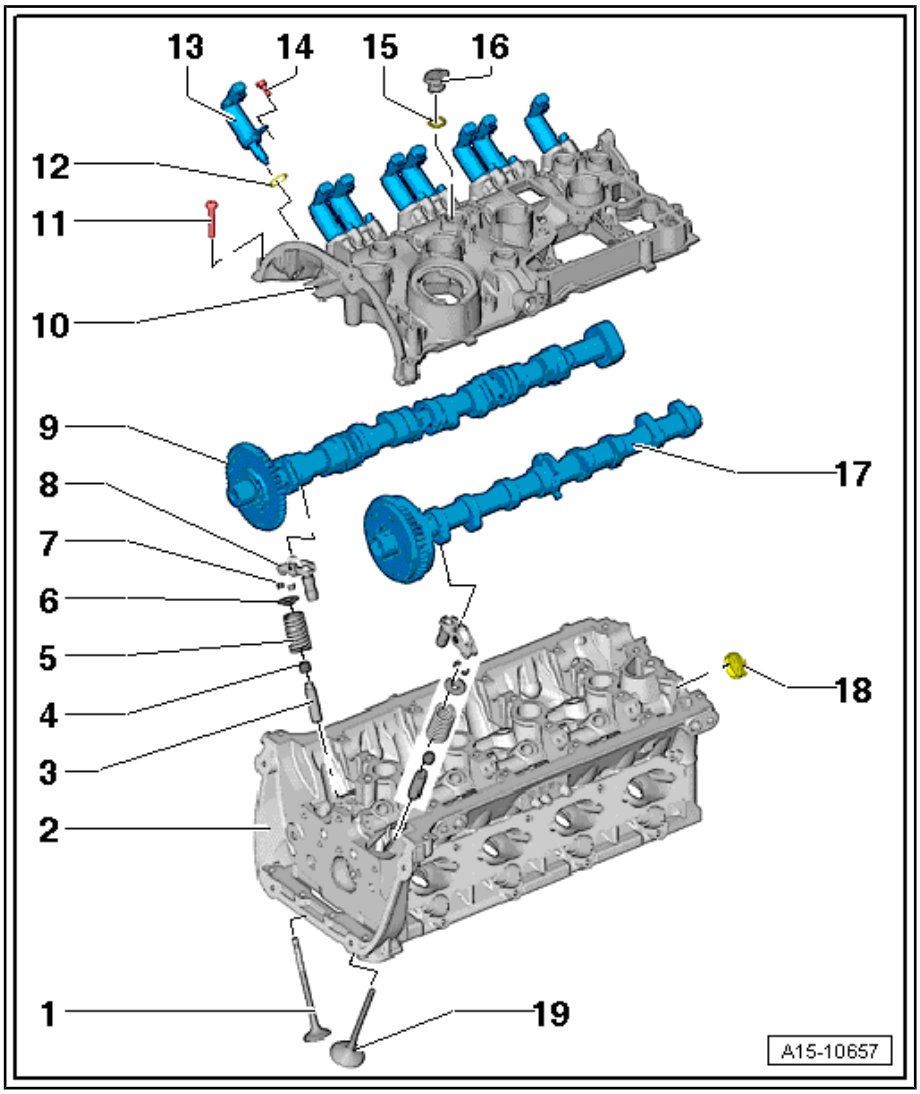

1 - Exhaust valve
- ❑ Do not machine, only grinding-in is permitted
- ❑ Valve dimensions ⇒ page 160
- ❑ Checking valve guides ⇒ page 159

2 - Cylinder head

3 - Valve guide
- ❑ Checking ⇒ page 159

4 - Valve stem oil seal
- ❑ Renewing: with cylinder head installed ⇒ page 150 , with cylinder head removed ⇒ page 154

5 - Valve spring

6 - Valve spring plate

7 - Valve cotters

8 - Hydraulic compensation element
- ❑ Do not interchange
- ❑ Lubricate contact surface

9 - Exhaust camshaft
- ❑ Removing and installing ⇒ page 135
- ❑ Check radial clearance with Plastigage (roller rocker fingers removed)
- ❑ Radial clearance: 0.024 ... 0.066 mm
- ❑ Runout: max. 0.04 mm

10 - Cylinder head cover

- ❑ With integrated camshaft bearings
- ❑ Clean sealing surface; machining not permitted
- ❑ Remove old sealant residues

11 - Bolt

- ❑ Renew
- ❑ Slackening ⇒ page 134
- ❑ Tightening sequence ⇒ page 135

12 - O-ring

- ❑ Renew
- ❑ Lubricate with engine oil

13 - Actuator for camshaft adjustment

14 - Bolt

- ❑ 5 Nm

15 - O-ring

- ❑ Renew
- ❑ Lubricate with engine oil

16 - Sealing plug

17 - Inlet camshaft

- ❑ Removing and installing ⇒ page 135
- ❑ Check radial clearance with Plastigage (roller rocker fingers removed)
- ❑ Radial clearance: 0.024 ... 0.066 mm
- ❑ Runout: max. 0.04 mm

18 - Sealing cap

- ❑ Renew
- ❑ Removing sealing cap with cylinder head cover installed: pierce on one side with an awl and pry out
- ❑ Installing ⇒ page 146

19 - Inlet valve

- ❑ Do not machine, only grinding-in is permitted
- ❑ Valve dimensions ⇒ page 160
- ❑ Checking valve guides ⇒ page 159

Loosening cylinder head cover

– Loosen cylinder head cover bolts in the sequence 1 ... 6.

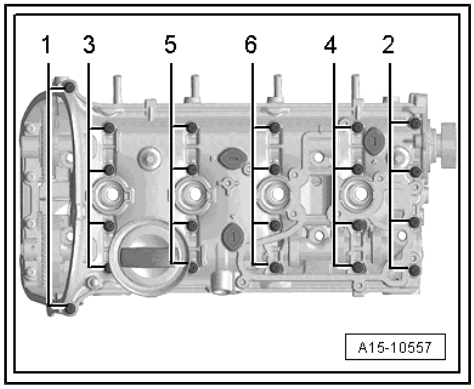

Tightening sequence for cylinder head cover

– Renew bolts.

1. Fit bolts in the sequence -1 ... 6- and hand-tighten in several stages.
2. Tighten bolts in the sequence -1 ... 6- to 8 Nm using torque wrench.
3. Turn 90° further in the sequence -1 ... 6- using a rigid wrench.

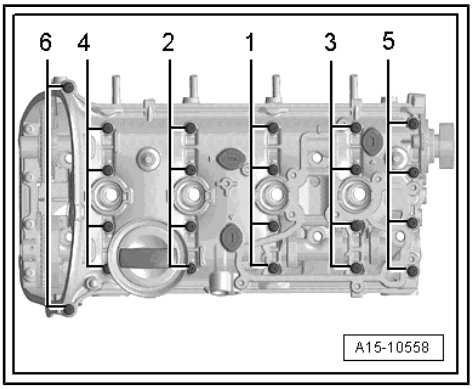

Note

Take care to keep cylinder head cover straight.

4.2 Removing and installing camshaft

Special tools and workshop equipment required

- Assembly tool - T10352-
- Counterhold tool - T10355-
- Locking pin - T40011-
- Assembly lever - T40243-
- Locking tool - T40267-
- Camshaft clamp - T40271-

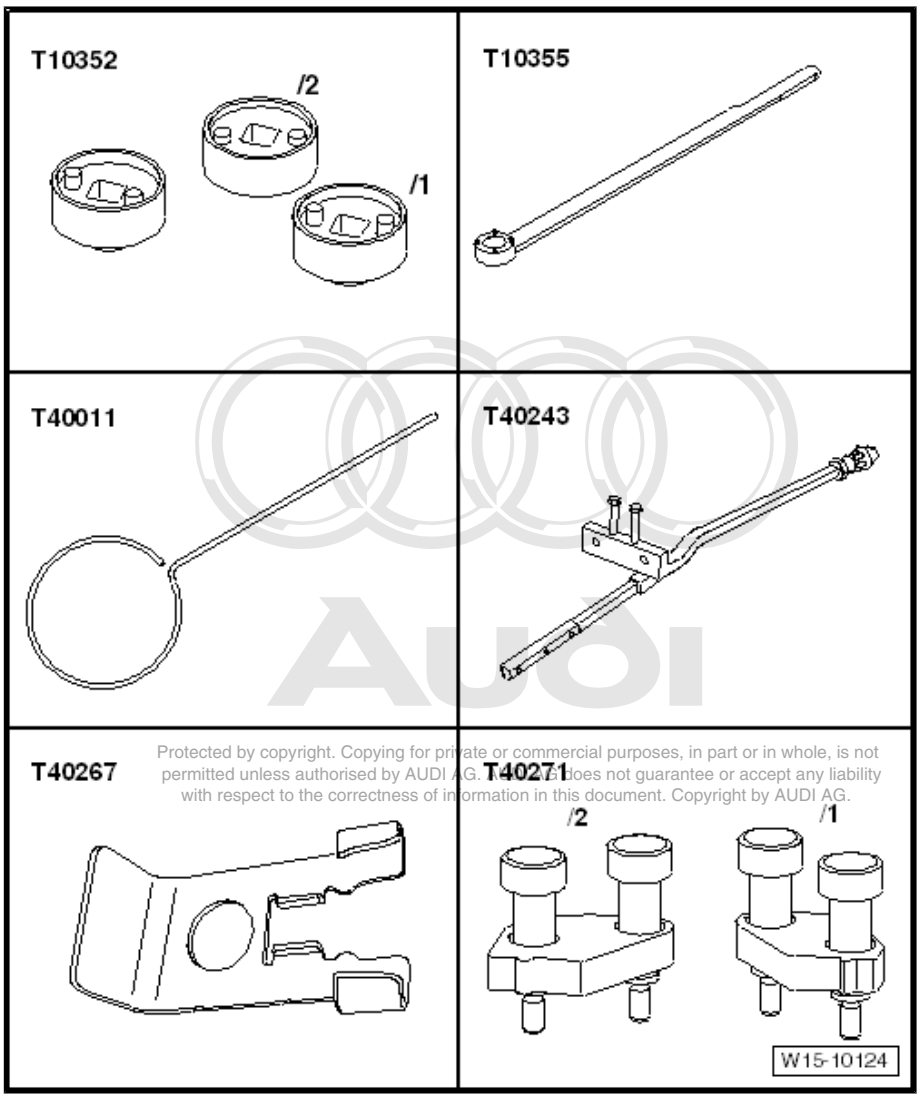

- Thrust piece - T10174-

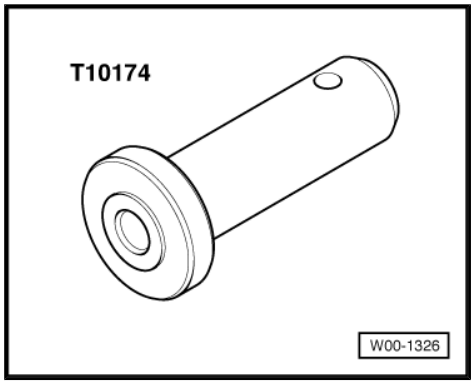

- Drifts - T40196-

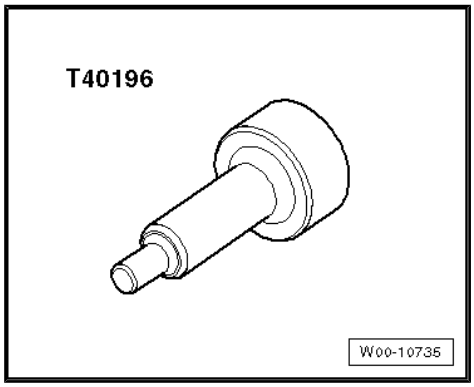

- Spacers - T40191-

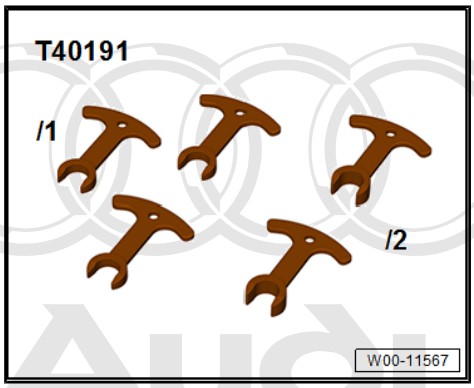

Removing

Note

- *Sealing surfaces at bottom of cylinder head cover and top of cylinder head must not be machined.*
- *The camshaft bearings are integrated into the cylinder head and cylinder head cover. The timing chain must be slackened before removing the cylinder head cover.*
- *Renew sealing cap ⇒ Item 18 (page 134) if cylinder head cover has been detached.*
- *Fit cable ties in the original positions when installing.*

– Remove engine cover panel ⇒ page 54 .

– Remove air cleaner housing ⇒ page 257 .

– Unplug electrical connectors -arrows- at actuators for camshaft adjustment.

– Remove ignition coils with output stages ⇒ page 310 .

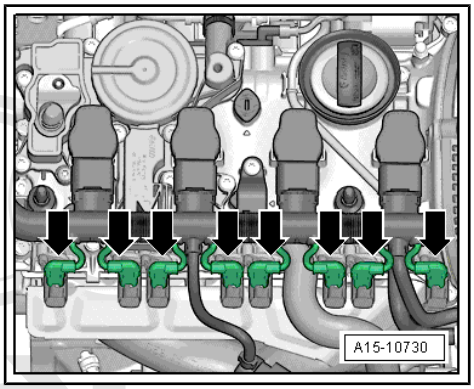

– Remove actuators for camshaft adjustment -arrows-.

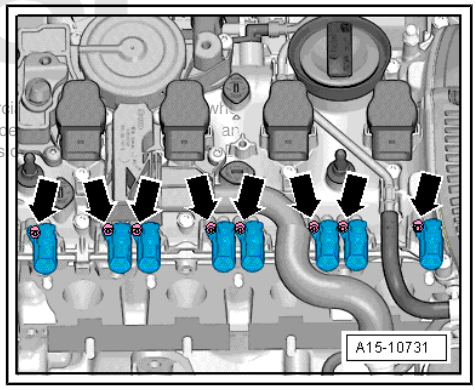

– Disconnect crankcase breather hose -1-.

– Remove bolts -arrows-, detach crankcase breather system and disconnect from crankcase breather hose -2- in direction of -arrow-.

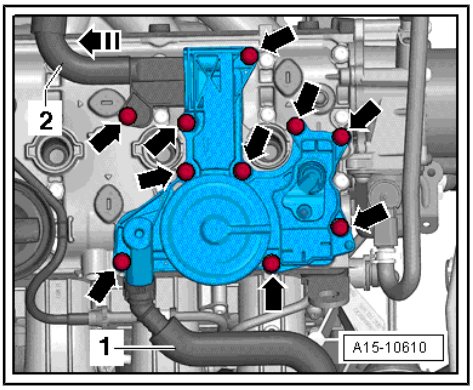

– Remove bolt -1- and press release tabs to disconnect pipe -arrows-.

– Unplug electrical connector -2- at Hall sender - G40- .

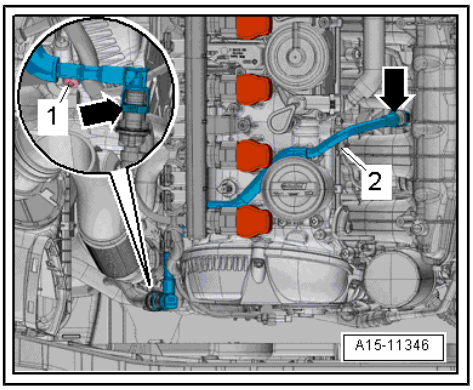

– Unscrew bolts -1 to 5- and remove timing chain cover (top).

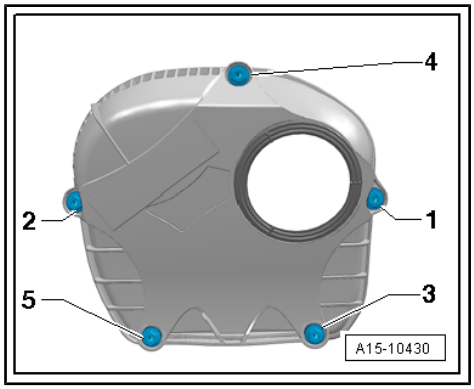

Caution

The timing valve has a left-hand thread.

– Turn assembly tool - T10352/1- in direction of -arrow- to remove timing valve.

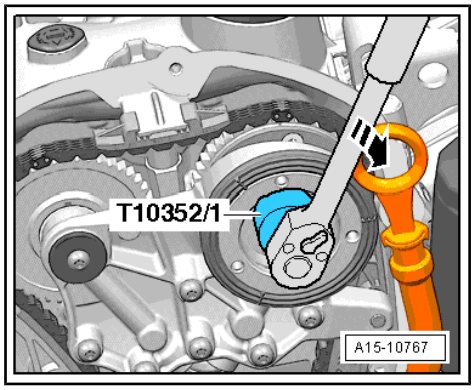

– Remove bolts -arrows- and detach bearing saddle.

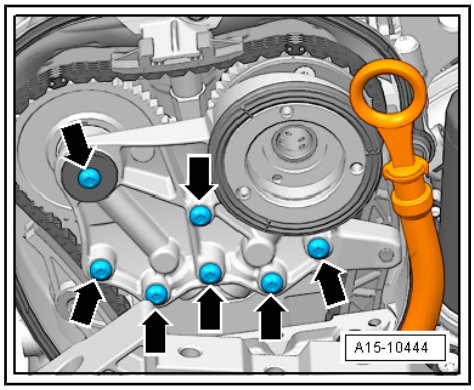

– Vehicles with torque reaction support: remove cross member for torque reaction support ⇒ page 47 .

– Turn vibration damper to “TDC” position using counterhold tool - T10355- .

- Notch on vibration damper must align with arrow marking on timing chain cover (bottom) -arrow-.
- The markings -1- on the camshafts must face upwards.

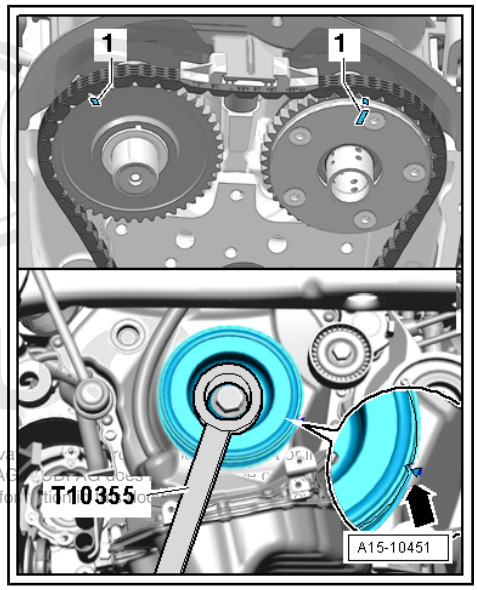

Caution

Risk of irreparable damage to engine.

- *Only insert drifts - T40196- in points marked in illustration.*

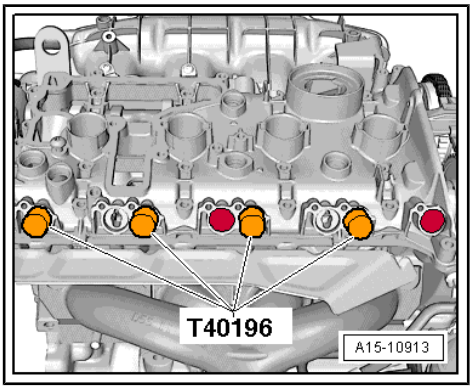

– Insert drifts - T40196- as shown in illustration.
– Turn crankshaft 2 rotations in direction of engine rotation.

Note

Engine must be at "TDC" position again.

– Remove drifts - T40196- .

– Use a waterproof pen to mark camshaft timing chain and cylinder head -arrows- relative to markings on chain sprockets -1-.
– Use a waterproof pen to mark camshaft timing chain relative to guide rail of timing chain -2- as well.

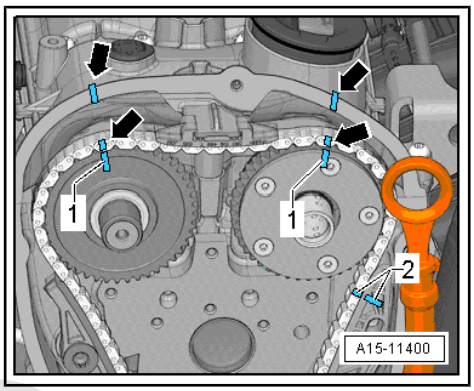

– Remove sealing plug -arrow-.

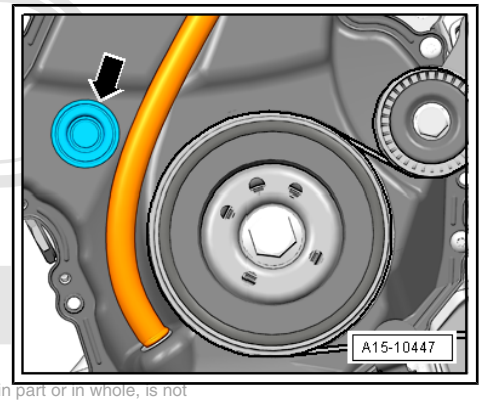

– Remove bolts -arrows-.

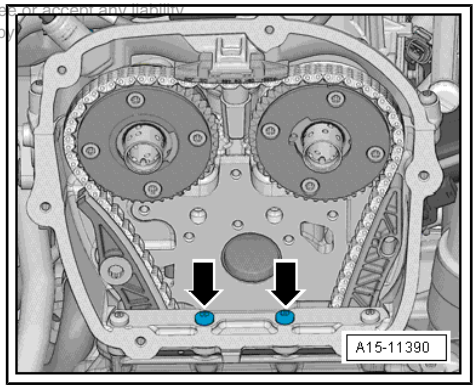

– Remove bolt -arrow-.

Depending on version, 2 different chain tensioners may be installed.

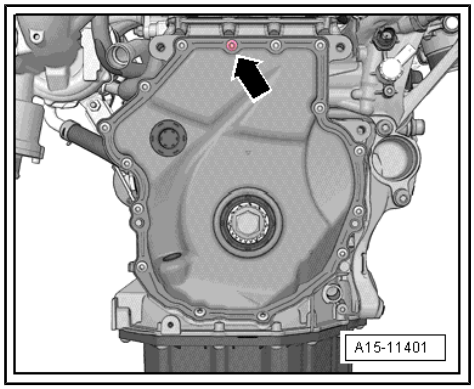

Version 1

– Screw in assembly lever - T40243- -arrows-.

– Lift locking element for chain tensioner; to do so, insert scriber or suitable screwdriver in hole of chain tensioner in direction of -arrow 1- and hold in place.

– Push assembly lever - T40243- slowly in direction of -arrow 2- and hold in place.

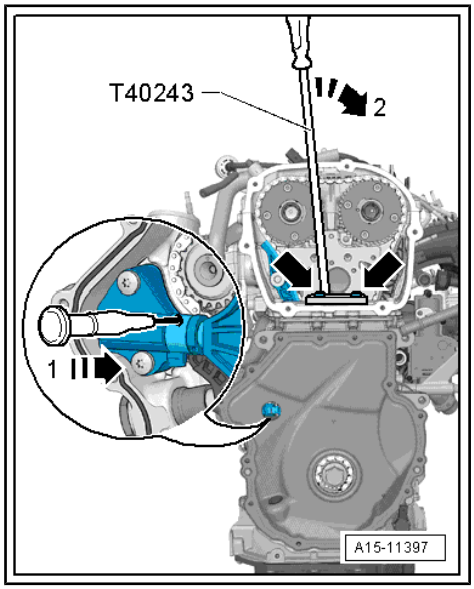

– Hold chain tensioner in position with locking pin - T40011- .

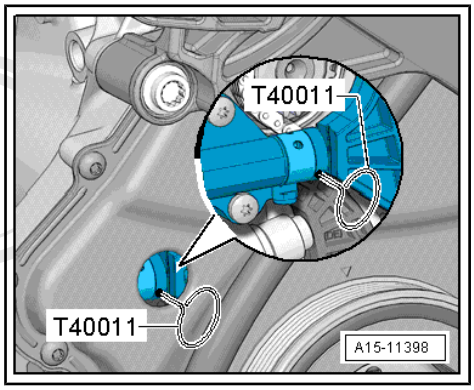

Version 2

– Screw in assembly lever - T40243- -arrows-.
– Compress and hold circlip -1- for chain tensioner.
– Push assembly lever - T40243- slowly in direction of -arrow- and hold in place.

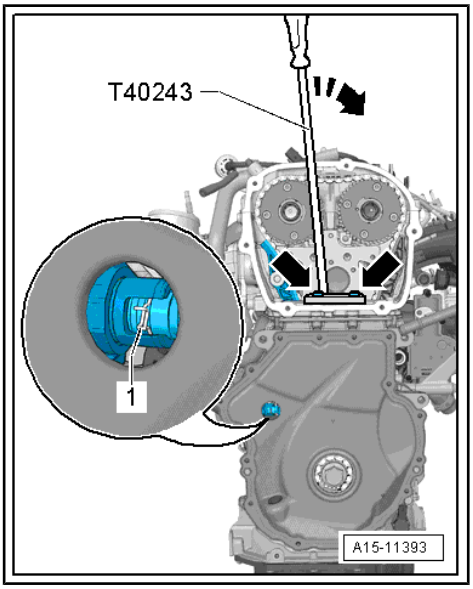

– Hold chain tensioner in position with locking tool - T40267- .

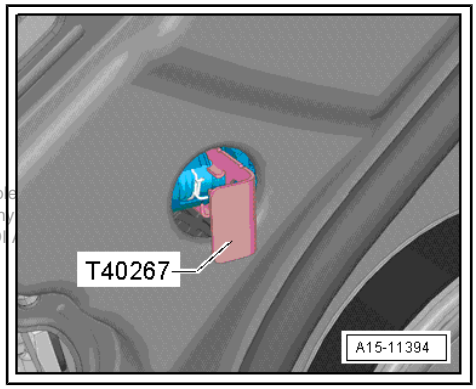

All versions

– Remove assembly lever - T40243- .
– Bolt camshaft clamp - T40271/2- onto cylinder head and slide into teeth on chain sprocket in direction of -arrow 2-; if necessary, use spanner to turn inlet camshaft in direction of -arrow 1-.

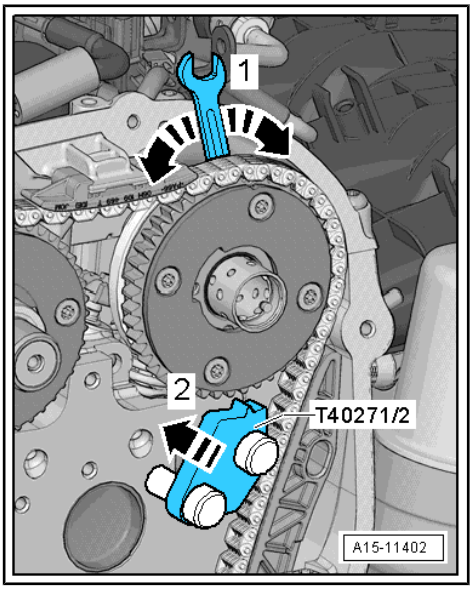

– Remove bolt -1- and guide tensioning rail -2- downwards.

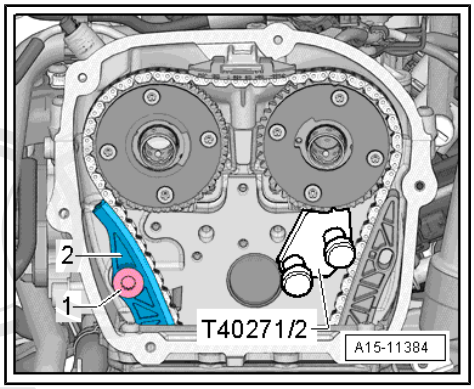

– Bolt camshaft clamp - T40271/1- onto cylinder head.

– Use spanner to turn exhaust camshaft in direction of -arrow 1- and slide camshaft clamp - T40271/1- into teeth on chain sprocket in direction of -arrow 2-.

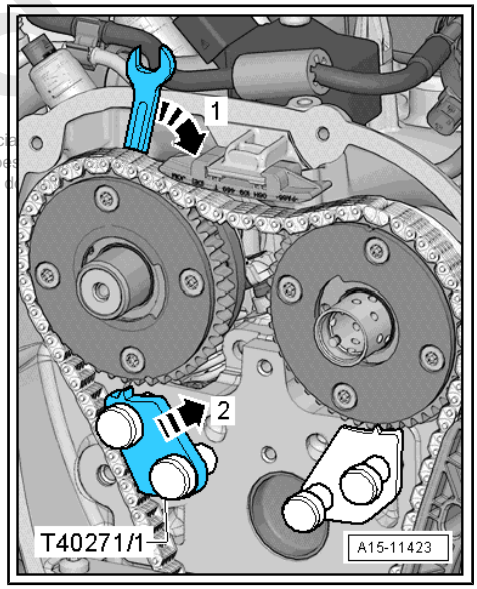

Note

- *Mark camshafts relative to camshaft clamp - T40271/1- and camshaft clamp - T40271/2- .*
- *If using new camshafts: Transfer markings made on old camshafts onto new camshafts.*
- *It will take much more time to install the new camshafts if the markings are not applied.*

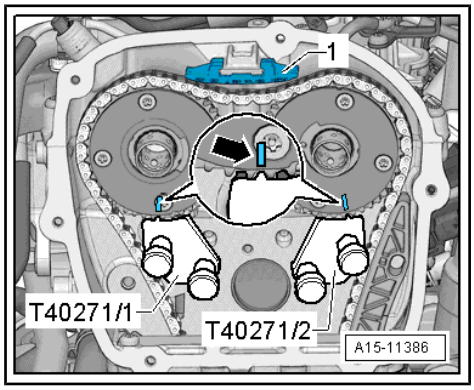

– Mark camshaft chain sprockets relative to camshaft clamp - T40271/1- and camshaft clamp - T40271/2- -arrows-.

– Use screwdriver to release catch and press off top guide rail -1- forwards.

– Remove camshaft timing chain from camshaft sprockets.

Caution

Avoid damage to valves and piston crowns.

- *Do not turn the crankshaft after the camshaft timing chain has been removed from the cylinder head.*

– Use spanner to turn inlet camshaft in direction of -arrow 1- and slide camshaft clamp - T40271/2- out of teeth on chain sprocket in direction of -arrow 2- and move camshaft into rest position.

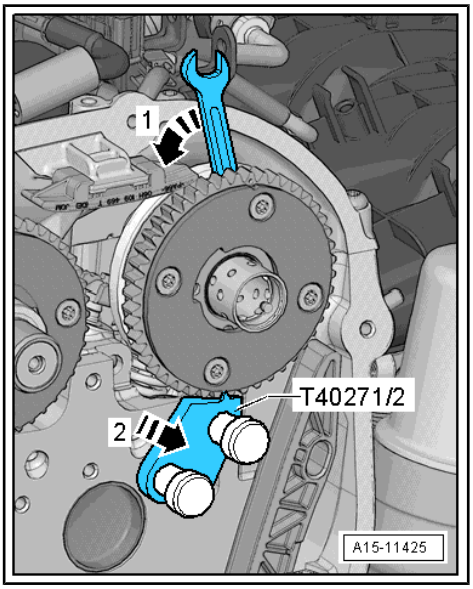

– Use spanner to turn exhaust camshaft in direction of -arrow 1- and slide camshaft clamp - T40271/1- out of teeth on chain sprocket in direction of -arrow 2- and move camshaft into rest position.

– Remove high-pressure pump ⇒ page 285 .

– Remove vacuum pump ⇒ Brake system; Rep. gr. 47 ; Vacuum system; Removing and installing vacuum pump .

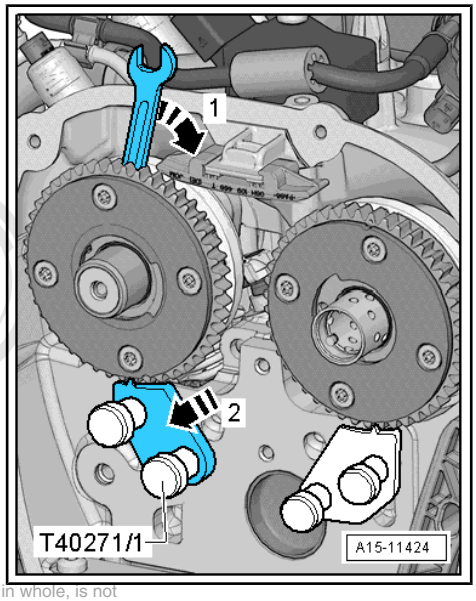

– Remove cylinder head cover bolts in the sequence -1 ... 6-.
– Detach cylinder head cover.
– Detach camshafts.

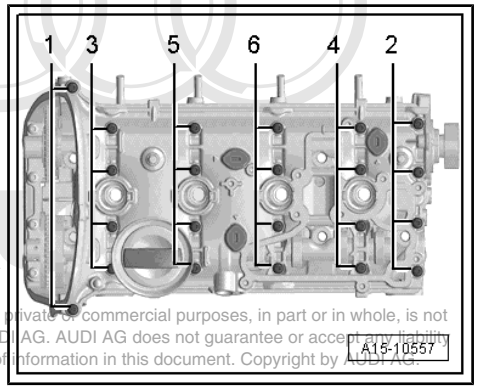

Caution

Protect lubrication system and bearings against contamination.

- *Cover exposed parts of the engine.*

Installing

Note

- *The sealing surfaces must be free of oil and grease.*
- *Pistons must not be at TDC.*
- *Ensure that all roller rocker fingers contact the valve ends correctly.*

– Remove sealant remaining on cylinder head with flat scraper.

WARNING

Risk of eye injury.

- *Wear safety goggles.*

Caution

Protect lubrication system and bearings against contamination.

- *Cover exposed parts of the engine.*

– Remove sealant residue in groove of cylinder head cover and on sealing surfaces, e.g. using a rotating plastic brush.
– Clean sealing surfaces; they must be free of oil and grease.

On new camshafts

– Transfer markings made on old camshafts onto new camshafts.

All models:

– Oil running surfaces of both camshafts.

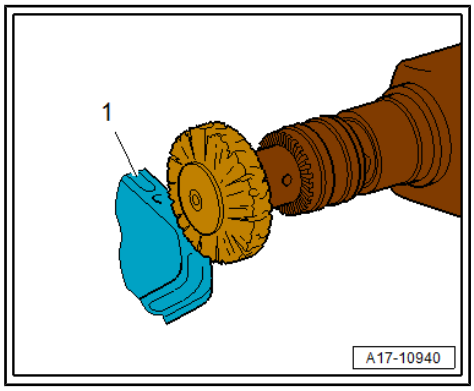

WARNING

Risk of eye injury.

- *Wear safety goggles.*

– Lock camshaft with spacers - T40191- as shown in illustration; if necessary, move sliders to correct positions.

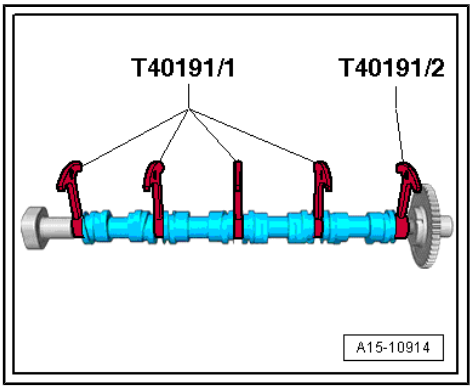

Note

If available, use second set of spacers - T40191- , or re-position -T40191/1- .

– Place camshafts in cylinder head; factory markings -arrows- must be positioned as shown in illustration.

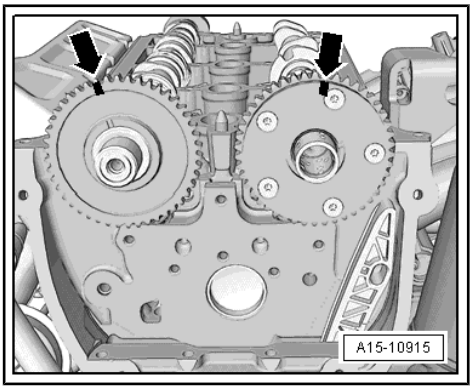

Note

Disregard the markings you have made.

– Check alignment -arrows- of camshafts.

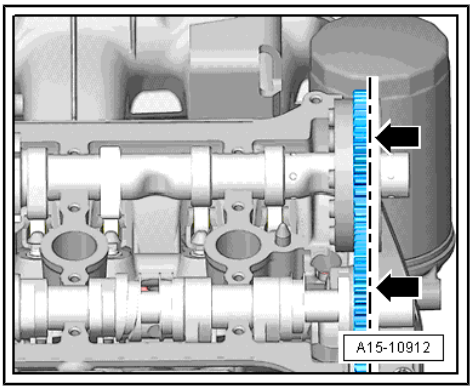

– Cut off nozzle of tube at front marking (∅ of nozzle approx. 2 mm).

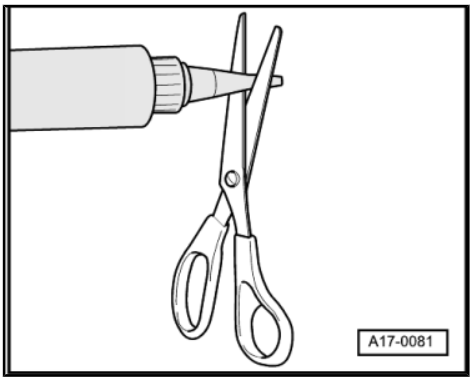

– Apply silicone sealant onto clean sealing surface of cylinder head cover, as illustrated -arrows-.

♦ Thickness of sealant bead: 2 ... 3 mm.

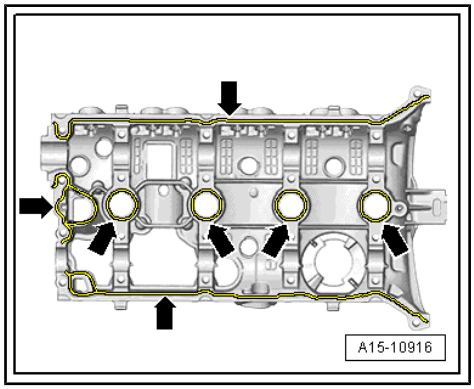

Note

♦ *The cylinder head cover must be installed within 5 minutes after applying the silicone sealant.*

♦ *The bead of sealant must not be thicker than specified, otherwise excess sealant can enter the sump and obstruct the strainer in the oil intake pipe.*

♦ *Note the use-by date of the sealant.*

Sealant ⇒ Electronic parts catalogue

– Fit cylinder head cover on cylinder head.

– Renew bolts for cylinder head cover.

– Tighten bolts in several stages; tightening sequence ⇒ page 135 .

Note

Take care to keep cylinder head cover straight.

– Use thrust piece - T10174- to drive in sealing cap -1- (do not apply sealant).

-a- = 1 ... 2 mm

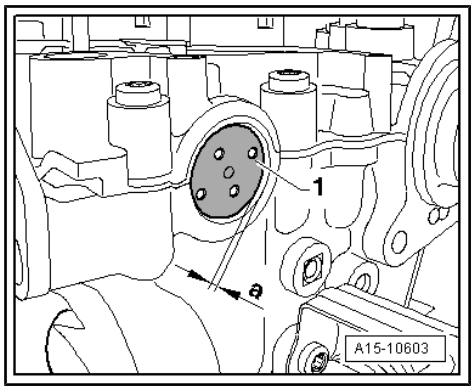

– Turn vibration damper to “TDC” position -arrow- using counterhold tool - T10355- .

• Notch on vibration damper must align with arrow marking on timing chain cover (bottom) -arrow-.

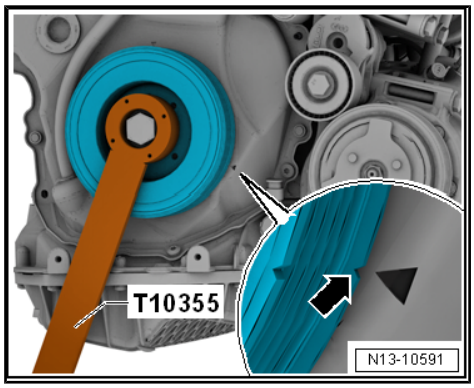

– Turn inlet camshaft in direction of -arrow 1- until marking -3- aligns with camshaft clamp - T40271/2- .
– Slide camshaft clamp - T40271/2- into teeth of chain sprocket in direction of -arrow 2-.

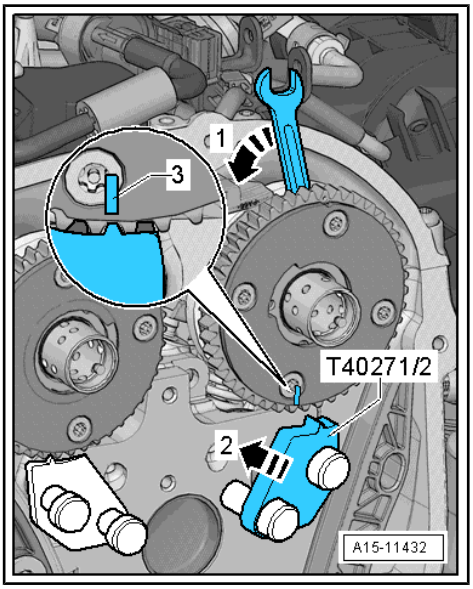

– Turn exhaust camshaft in direction of -arrow 1- until marking -3- aligns with camshaft clamp - T40271/1- .
– Slide camshaft clamp - T40271/1- into teeth of chain sprocket in direction of -arrow 2-.

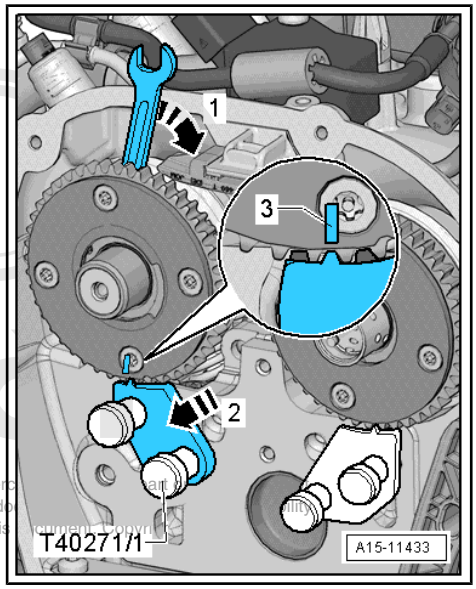

– Fit timing chain; to do so, position markings on chain links -arrows- at markings on chain sprockets -1-.
– Install top guide rail -2-.

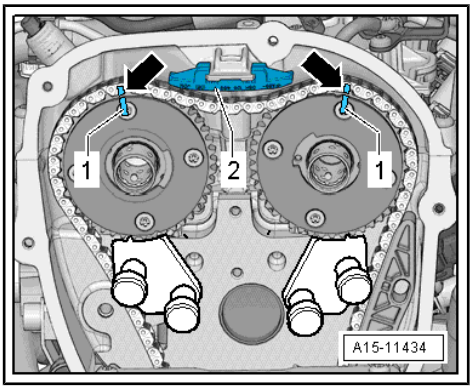

– Turn exhaust camshaft in direction of -arrow 1- and slide camshaft clamp - T40271/1- out of teeth on chain sprocket in direction of -arrow 2- and release camshaft.

– Remove camshaft clamp - T40271/1- .

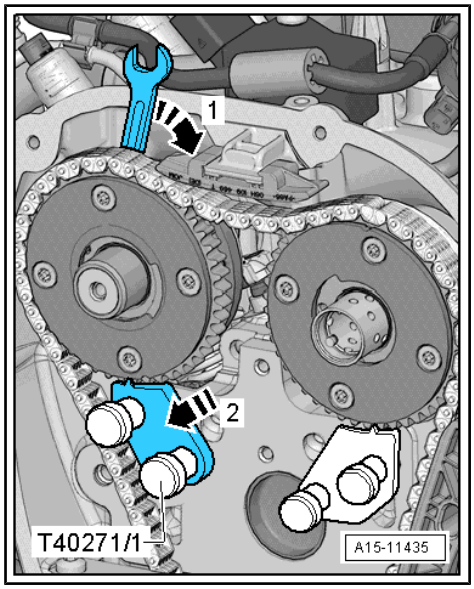

– Move guide rail -2- upwards and screw in bolt -1-.

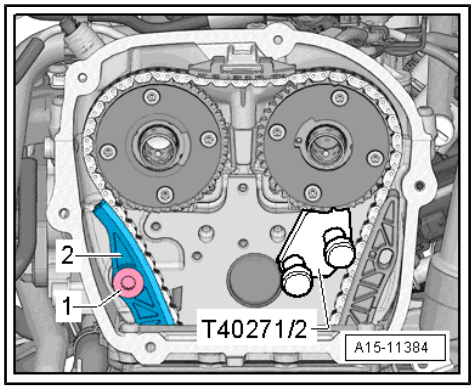

– Turn inlet camshaft in direction of -arrow 1- and slide camshaft clamp - T40271/2- out of teeth on chain sprocket in direction of -arrow 2- and release camshaft.

– Remove camshaft clamp - T40271/2- .

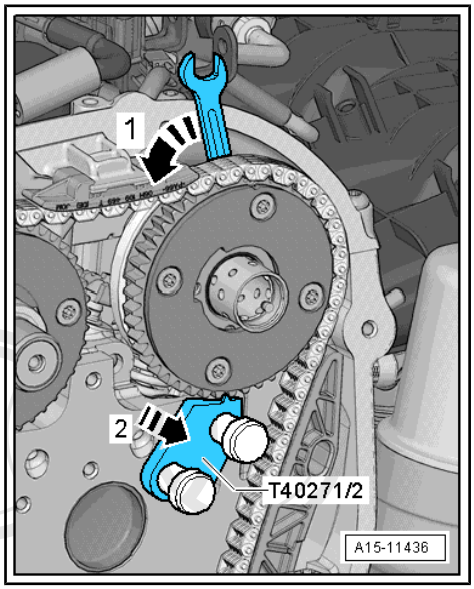

– Check valve timing; markings on camshaft timing chain and cylinder head -arrows- must align with markings on chain sprockets -1-.
– Markings on camshaft timing chain and on guide rail for camshaft timing chain -2- must be opposite one another.
– Notch on vibration damper must align with marking on cover for timing chain (bottom) -3-.

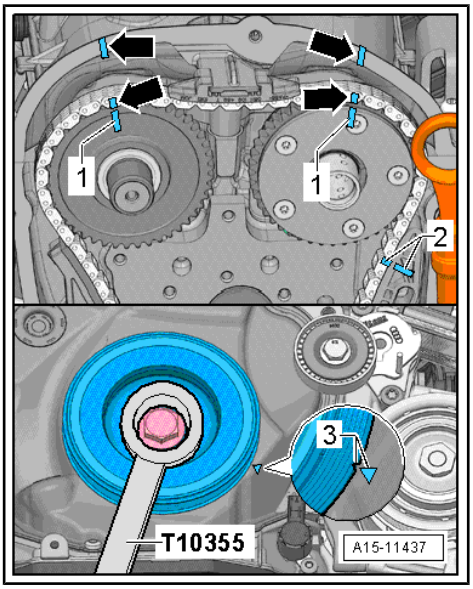

– Attach bearing saddle and screw in bolts -arrows- hand-tight.
– Depending on version, remove locking pin - T40011- or locking tool -T40267- .
– Tighten bolts -arrows- for bearing saddle ⇒ page 101 .

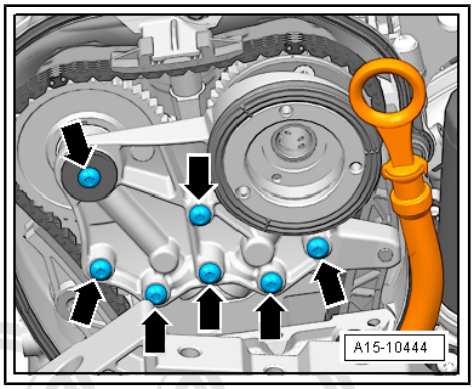

– Screw in bolt -arrow-.
– Install timing valve ⇒ Item 6 (page 101) .

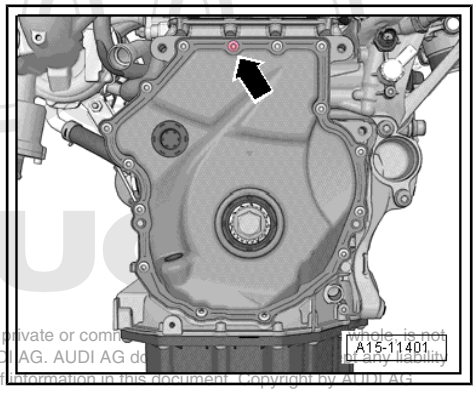

– Insert drifts - T40196- as shown in illustration.

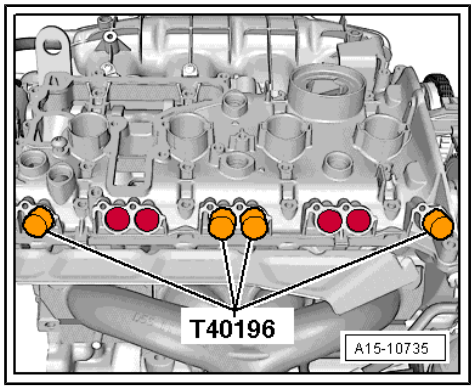

– Turn crankshaft 4 rotations in direction of engine rotation.
– Remove drifts - T40196- .
– Install timing chain cover (top) ⇒ page 96 .
– Install vacuum pump ⇒ Brake system; Rep. gr. 47 ; Vacuum system; Removing and installing vacuum pump .
– Install high-pressure pump ⇒ page 285 .
– Vehicles with torque reaction support: install cross member for torque reaction support ⇒ page 47 .
– Install air cleaner housing ⇒ page 257 .

Further assembly is basically carried out in reverse order of dismantling.

Tightening torques

◆ ⇒ “4.1 Exploded view - valve gear”, page 133

4.3 Removing and installing camshaft control valve 1 - N205-

Removing

– Remove engine cover panel ⇒ page 54 .
– Detach connector from camshaft control valve 1 - N205- -1-.
– Unscrew bolts -arrows- and remove camshaft control valve 1 - N205- .

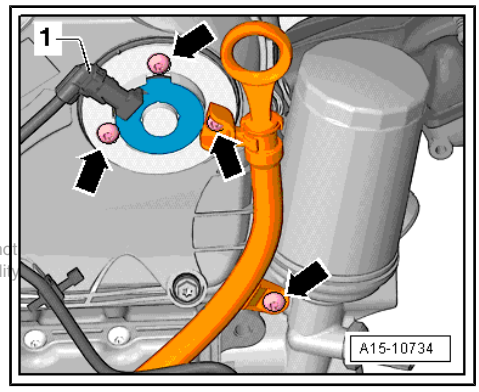

Installing

Installation is carried out in the reverse order; note the following:

Note

Renew O-ring.

– Lubricate seal and O-ring with engine oil.
– Install engine cover panel ⇒ page 54 .

Tightening torques

◆ ⇒ “1.1 Exploded view - timing chain cover”, page 94

4.4 Removing and installing valve stem oil seals

⇒ “4.4.1 Removing and installing valve stem oil seals (cylinder head installed)”, page 150

⇒ “4.4.2 Removing and installing valve stem oil seals (cylinder head removed)”, page 154

4.4.1 Removing and installing valve stem oil seals (cylinder head installed)

Special tools and workshop equipment required

- Spark plug socket and extension - 3122 B-
- Valve stem seal puller - 3364-
- Valve stem seal fitting tool - 3365-
- Adapters - T40012-
- Torque wrench - V.A.G 1331-
- Removal and installation device for valve cotters - VAS 5161 A-
- Guide plate for 2.0 ltr. and 3.0 ltr. FSI engine - VAS 5161/19B-

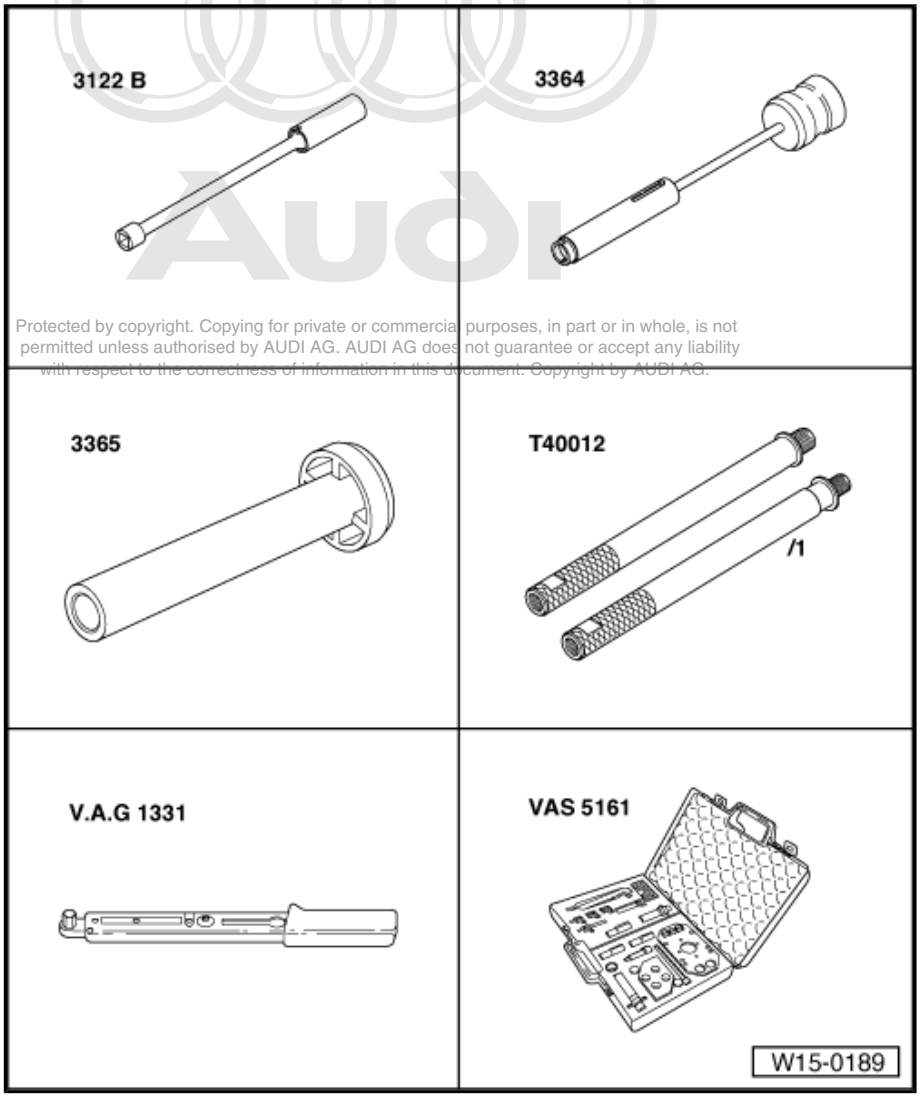

Removing valve stem oil seals

- Remove camshafts ⇒ page 135 .
- Mark original positions of roller rocker fingers and hydraulic compensation elements for reinstallation.
- Remove roller rocker fingers together with hydraulic compensation elements and put down on a clean surface.
- Remove spark plugs with spark plug spanner - 3122 B- .
- Secure guide plate for 2.0 ltr. and 3.0 ltr. FSI engine - VAS 5161/19B- to cylinder head with knurled screws - VAS 5161/12- as shown.
- Set piston of appropriate cylinder to “bottom dead centre”.

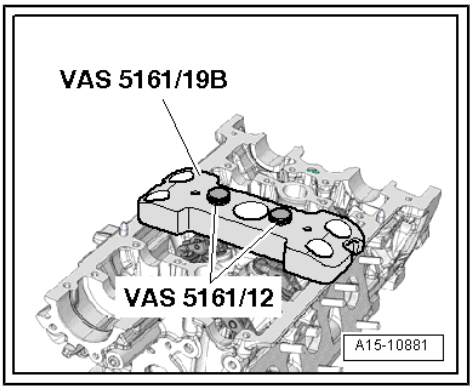

– Screw adapter - T40012- into spark plug thread.
– Connect to compressed air supply of at least 6 bar.
– Knock loose sticking valve cotters using punch - VAS 5161/3- and a plastic-headed hammer.

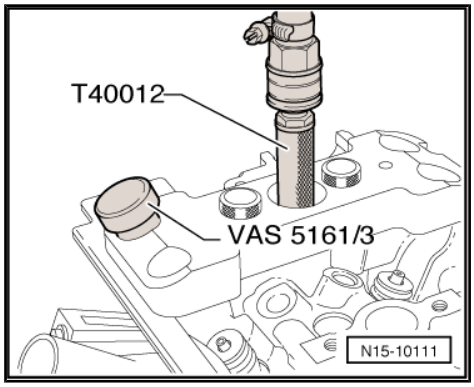

For inlet side

– Screw snap-in device - VAS 5161/6- with engaging fork - VAS 5161/5- into centre thread on guide plate for 2.0 ltr. and 3.0 ltr. FSI engine - VAS 5161/19B- .
– Insert assembly cartridge - VAS 5161/8- into guide plate for 2.0 ltr. and 3.0 ltr. FSI engine - VAS 5161/19B- .
– Engage pressure fork - VAS 5161/2- on snap-in device - VAS 5161/6- .

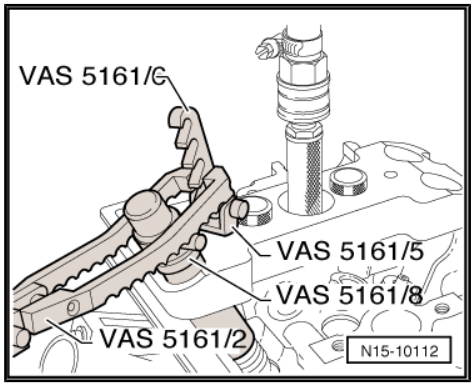

For exhaust side

– Screw snap-in device - VAS 5161/6- with engaging fork - VAS 5161/5- into outer thread on guide plate for 2.0 ltr. and 3.0 ltr. FSI engine - VAS 5161/19B- .
– Press down assembly cartridge - VAS 5161/8- and at the same time, turn knurled screw of assembly cartridge - VAS 5161/8- clockwise until tips engage in valve cotters.
– Move knurled screw back and forth slightly; the valve cotters are thus forced apart and taken up by the assembly cartridge.
– Release pressure fork - VAS 5161/2- .
– Take out assembly cartridge - VAS 5161/8- .

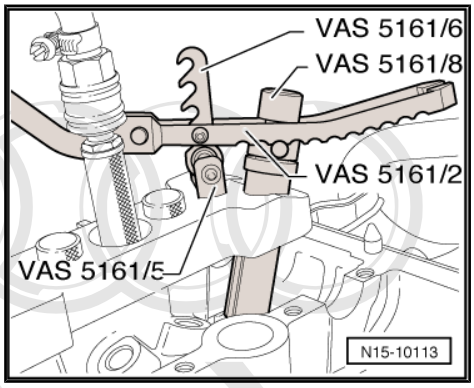

– Pull off valve stem oil seal with valve stem seal puller - 3364- .

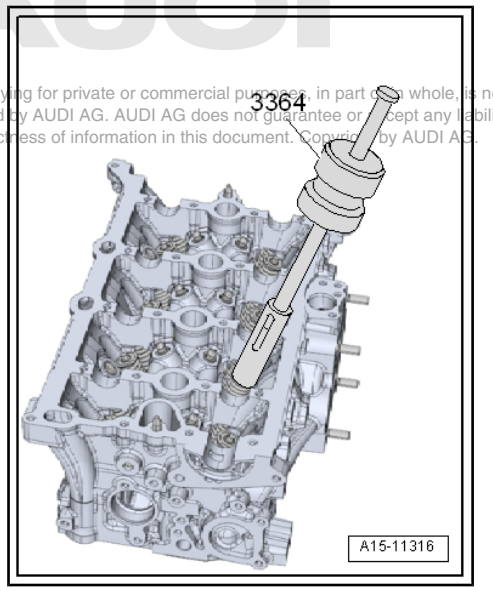

– If valve stem seal puller - 3364- cannot be used on account of restricted space, knock out pin -arrow- with a punch and remove the impact extractor attachment.

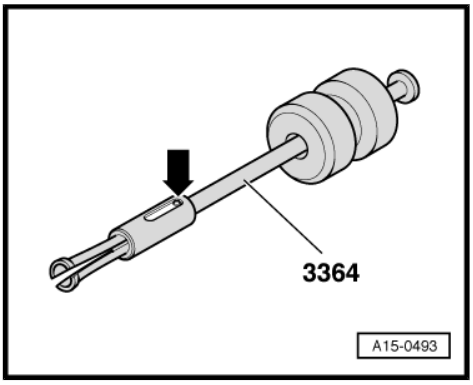

– Position lower part of valve stem seal puller - 3364- on valve stem oil seal.
– Insert a punch -1- through hole in lower section of puller.
– Apply assembly lever to puller and pull out valve stem oil seal -arrow-.

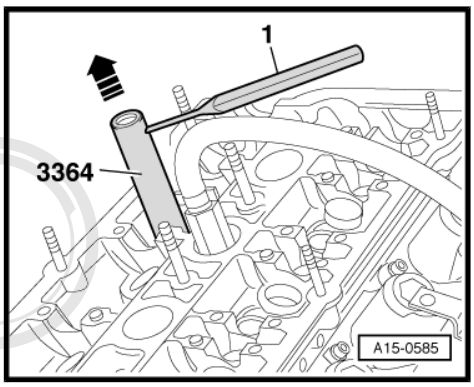

Installing valve stem oil seals

– To prevent damage to the new valve stem seals -B-, attach plastic sleeve -A- to valve stem.
– Lubricate sealing lip of valve stem oil seal -B-, place it in the valve stem seal fitting tool - 3365- and push carefully onto valve guide.
– Remove plastic sleeve -A-.
– Insert valve spring and valve spring plate.
– Set up removal and installation device for valve cotters - VAS 5161- as shown.

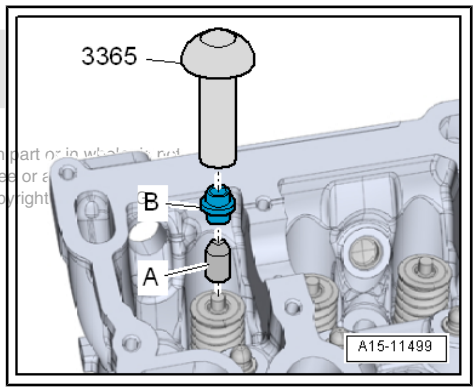

Inlet side

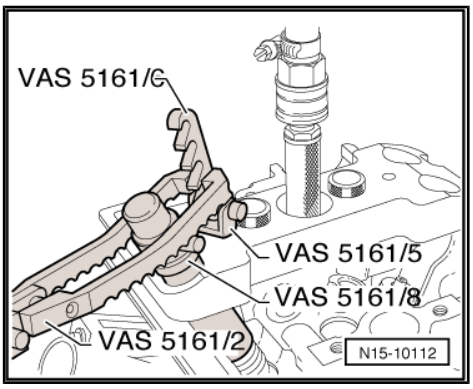

Exhaust side

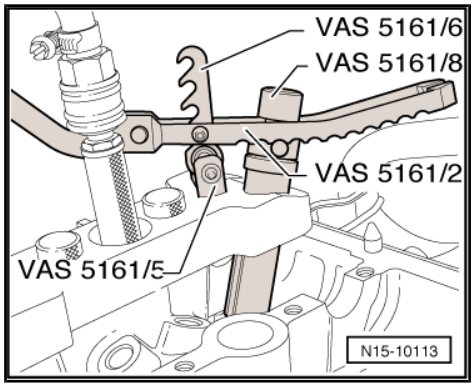

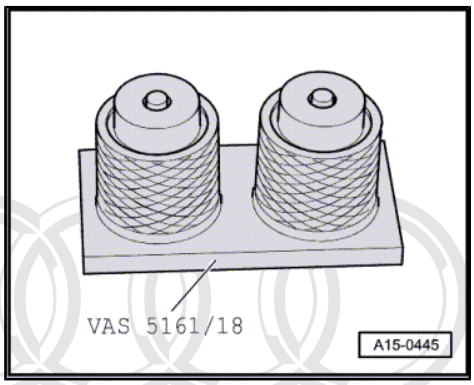

Note

- *If valve cotters have been removed from assembly cartridge, they need to be put into insertion device - VAS 5161/18- first.*
- *Press assembly cartridge -VAS 5161/8- onto insertion device from above and pick up valve cotters.*

– Use pressure fork - VAS 5161/8- to press down assembly cartridge - VAS 5161/2- , then turn knurled screw of assembly cartridge back and forth while pulling upwards.

– Release pressure fork - VAS 5161/2- with knurled screw in pulled position.

– Detach removal and installation device for valve cotters - VAS 5161- .

The remaining installation steps are carried out in the reverse sequence. Note the following:

– Install camshafts ⇒ page 135 .

4.4.2 Removing and installing valve stem oil seals (cylinder head removed)

Special tools and workshop equipment required

- Valve stem seal puller - 3364-
- Valve stem seal fitting tool - 3365-
- Removal and installation device for valve cotters - VAS 5161 A-
- Guide plate for 2.0 ltr. and 3.0 ltr. FSI engine - VAS 5161/19B-
- Engine and gearbox support - VAS 6095-
- Cylinder head tensioning device - VAS 6419-

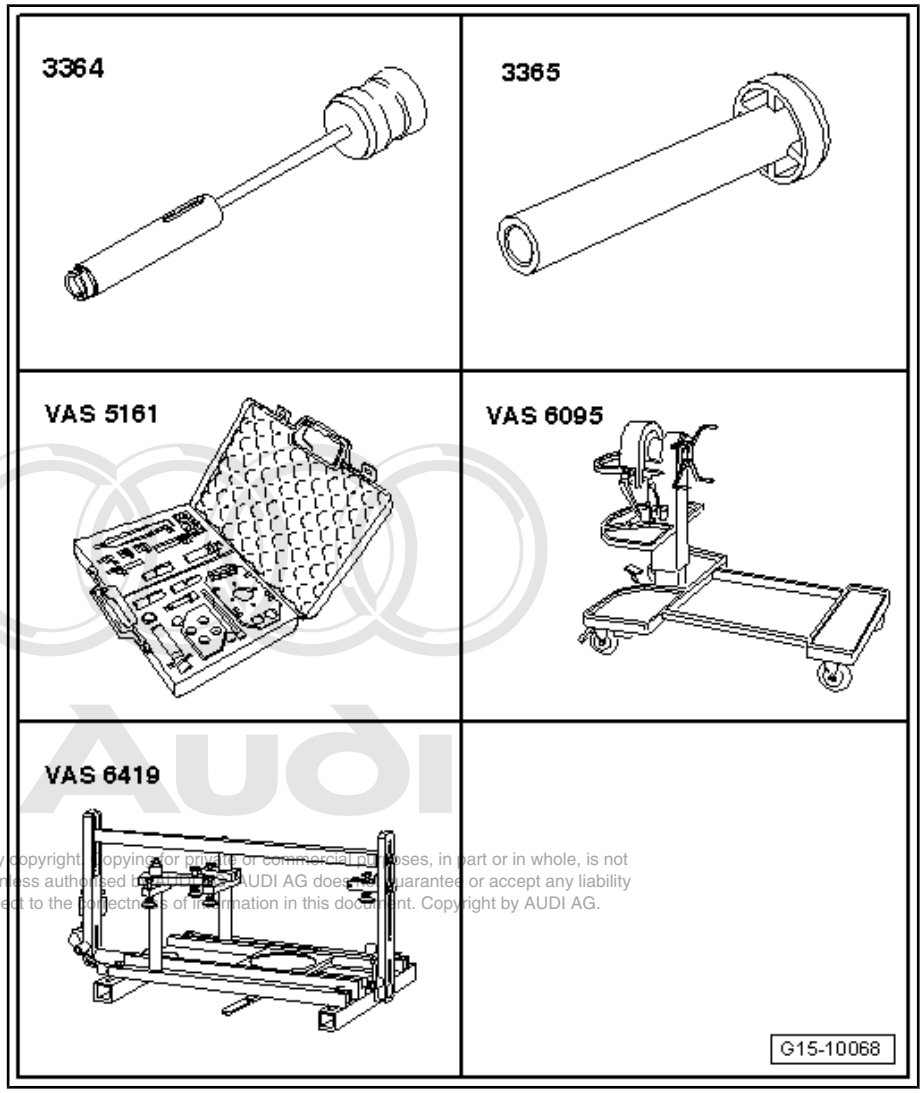

Procedure

– Remove camshafts ⇒ page 135 .

– Mark original positions of roller rocker fingers and hydraulic compensation elements for reinstallation.

– Remove roller rocker fingers together with hydraulic compensation elements and put down on a clean surface.

– Insert cylinder head tensioning device - VAS 6419- into engine and gearbox support - VAS 6095- .

– Secure cylinder head in cylinder head tensioning device, as shown in illustration.

– Connect cylinder head tensioning device to compressed air.

– Using lever -arrow-, slide air pad under combustion chamber where valve stem oil seal is to be removed.

– Apply just enough compressed air to bring air pad into contact with valve heads.

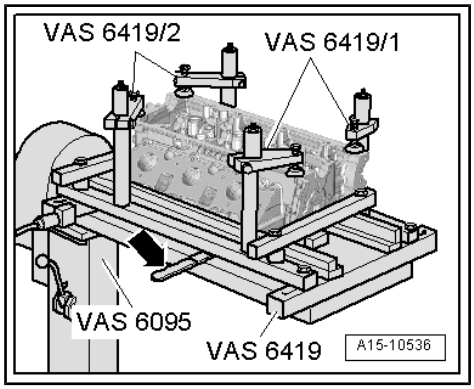

– Secure guide plate for 2.0 ltr. and 3.0 ltr. FSI engine - VAS 5161/19B- to cylinder head with knurled screws - VAS 5161/12- as shown.

– Insert drift -VAS 5161/3- into guide plate and use plastic-headed hammer to release sticking valve cotters.

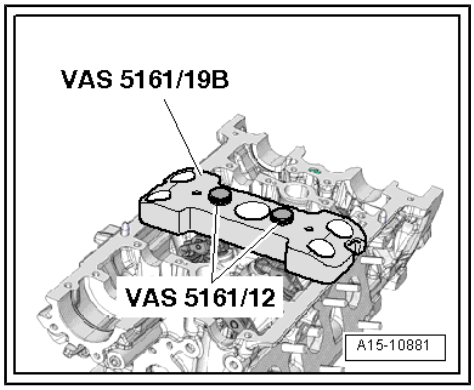

For inlet side

– Screw snap-in device - VAS 5161/6- with engaging fork - VAS 5161/5- into centre thread on guide plate for 2.0 ltr. and 3.0 ltr. FSI engine - VAS 5161/19B- .

– Insert assembly cartridge - VAS 5161/8- into guide plate for 2.0 ltr. and 3.0 ltr. FSI engine - VAS 5161/19B- .

– Engage pressure fork - VAS 5161/2- on snap-in device - VAS 5161/6- .

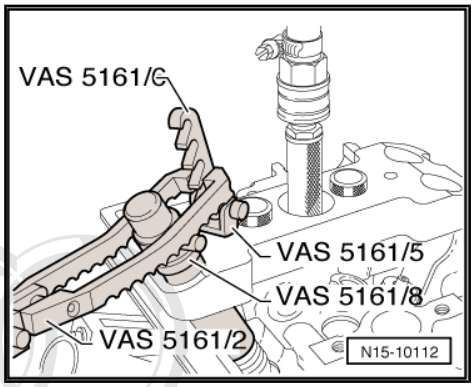

For exhaust side

– Screw snap-in device - VAS 5161/6- with engaging fork - VAS 5161/5- into outer thread on guide plate for 2.0 ltr. and 3.0 ltr. FSI engine - VAS 5161/19B- .

– Press down assembly cartridge - VAS 5161/8- and at the same time, turn knurled screw of assembly cartridge - VAS 5161/8- clockwise until tips engage in valve cotters.

– Move knurled screw back and forth slightly; the valve cotters are thus forced apart and taken up by the assembly cartridge.

– Release pressure fork - VAS 5161/2- .

– Take out assembly cartridge - VAS 5161/8- .

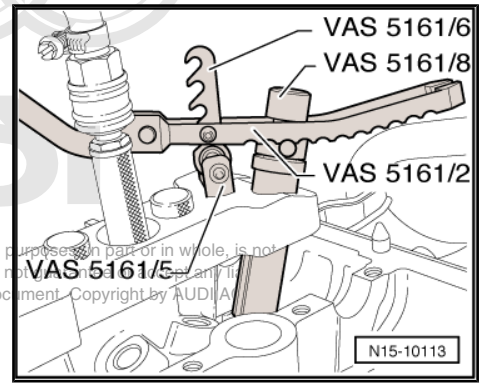

– Pull off valve stem oil seal with valve stem seal puller - 3364- .

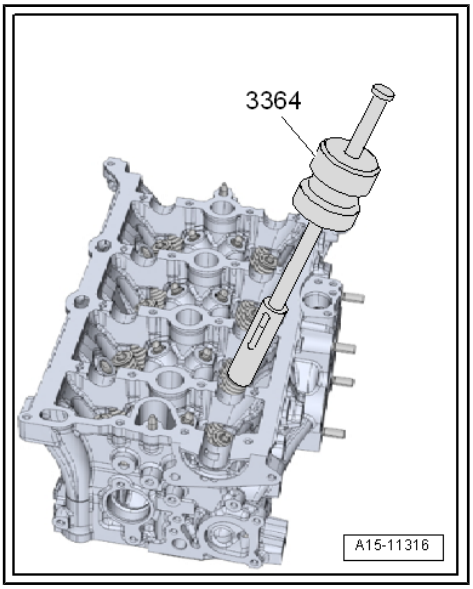

Installing valve stem oil seals

> **Caution**
>
> *Make sure valve stem oil seals are not damaged when installing.*
>
> ♦ *New valve stem oil seals -B- are supplied with plastic sleeve; fit plastic sleeve -A- onto valve stem.*

– Lightly oil sealing lip of valve stem oil seal.
– Slide valve stem oil seal onto plastic sleeve.
– Carefully press valve stem oil seal onto valve guide using valve stem seal fitting tool - 3365- .
– Take off plastic sleeve.
– Insert valve spring and valve spring plate.
– Set up removal and installation device for valve cotters - VAS 5161- as shown.

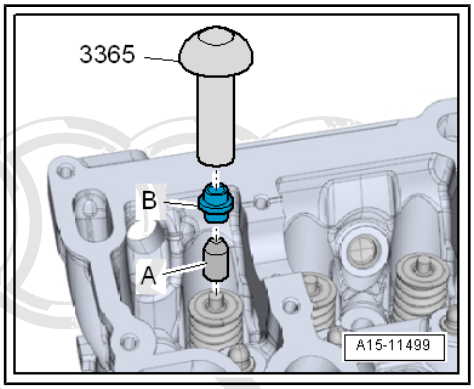

Inlet side

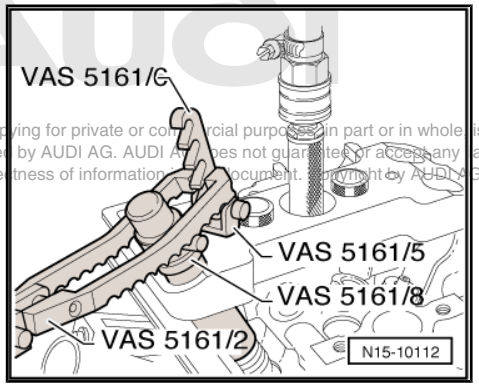

Exhaust side

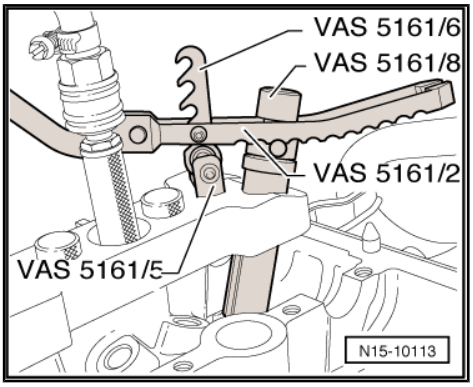

Note

- *If valve cotters have been removed from assembly cartridge, they need to be put into insertion device - VAS 5161/18- first.*
- *Press assembly cartridge -VAS 5161/8- onto insertion device from above and pick up valve cotters.*

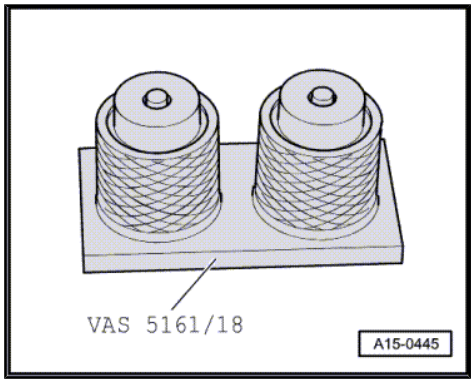

– Use pressure fork - VAS 5161/8- to press down assembly cartridge - VAS 5161/2- , then turn knurled screw of assembly cartridge back and forth while pulling upwards.

– Release pressure fork - VAS 5161/2- with knurled screw in pulled position.

– Detach removal and installation device for valve cotters - VAS 5161- .

Further assembly is basically carried out in reverse order of dismantling. Note the following:

– Install camshafts ⇒ page 135 .

5 Inlet and exhaust valves

⇒ “5.1 Checking valve guides”, page 159
⇒ “5.2 Checking valves”, page 160
⇒ “5.3 Valve dimensions”, page 160

5.1 Checking valve guides

Special tools and workshop equipment required

- Universal dial gauge bracket - VW 387-

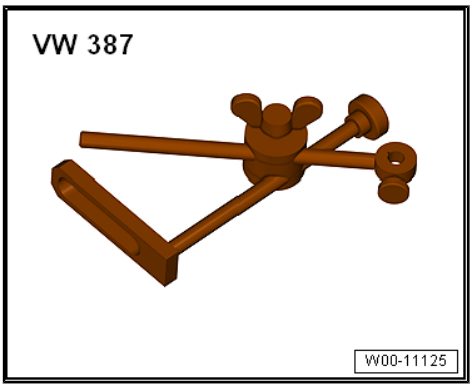

- Dial gauge - VAS 6079-

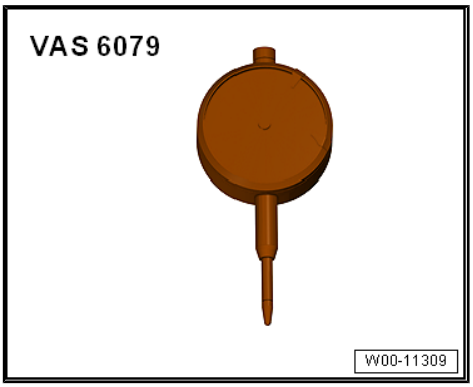

Test sequence

– Insert valve into guide. End of valve stem must be flush with guide. Only insert inlet valve into inlet valve guide and exhaust valve into exhaust valve guide, as the stem diameters are different.

– Measure the amount of sideways play.

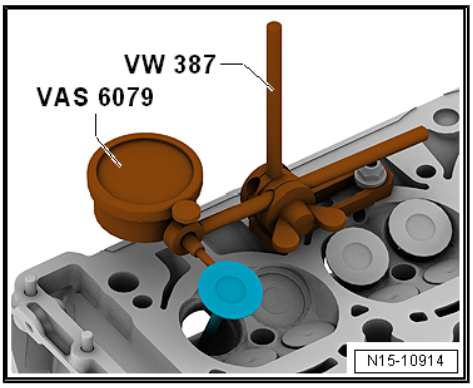

Wear limit

Inlet valve guide	Exhaust valve guide
0.80 mm	0.80 mm

Note

- *If the wear limit is exceeded, repeat the measurement with new valves. Renew cylinder head if wear limit is still exceeded.*
- *If the valve has to be renewed as part of a repair, use a new valve for the measurement.*

5.2 Checking valves

– Visually inspect for scoring on valve stems and valve seat surfaces.

– Renew valve if scoring is clearly visible.

5.3 Valve dimensions

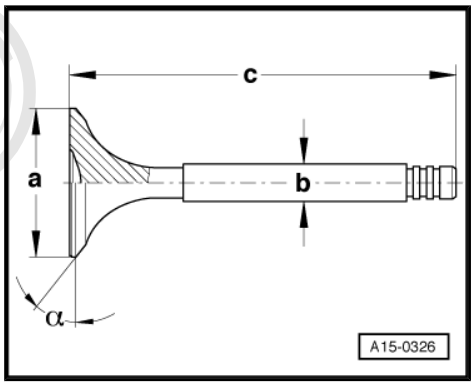

Note

Inlet and exhaust valves must not be machined. Only grinding-in is permitted.

Dimension		Inlet valve	Exhaust valve
∅ a	mm	33.85 ± 0.10	28.0 ± 0.1
∅ b	mm	5.98 ± 0.01	5.96 ± 0.01
c	mm	104.0 ± 0.2	101.9 ± 0.2
α	°	45	45

17 – Lubrication

1 Sump/oil pump

1.1 Exploded view - sump/oil pump

Note

If large quantities of metal shavings or other particles are found in the engine oil when repairing the engine (possibly caused by partial seizure of crankshaft and conrod bearings), clean the oil passages thoroughly and renew the engine oil cooler to prevent further damage occurring later.

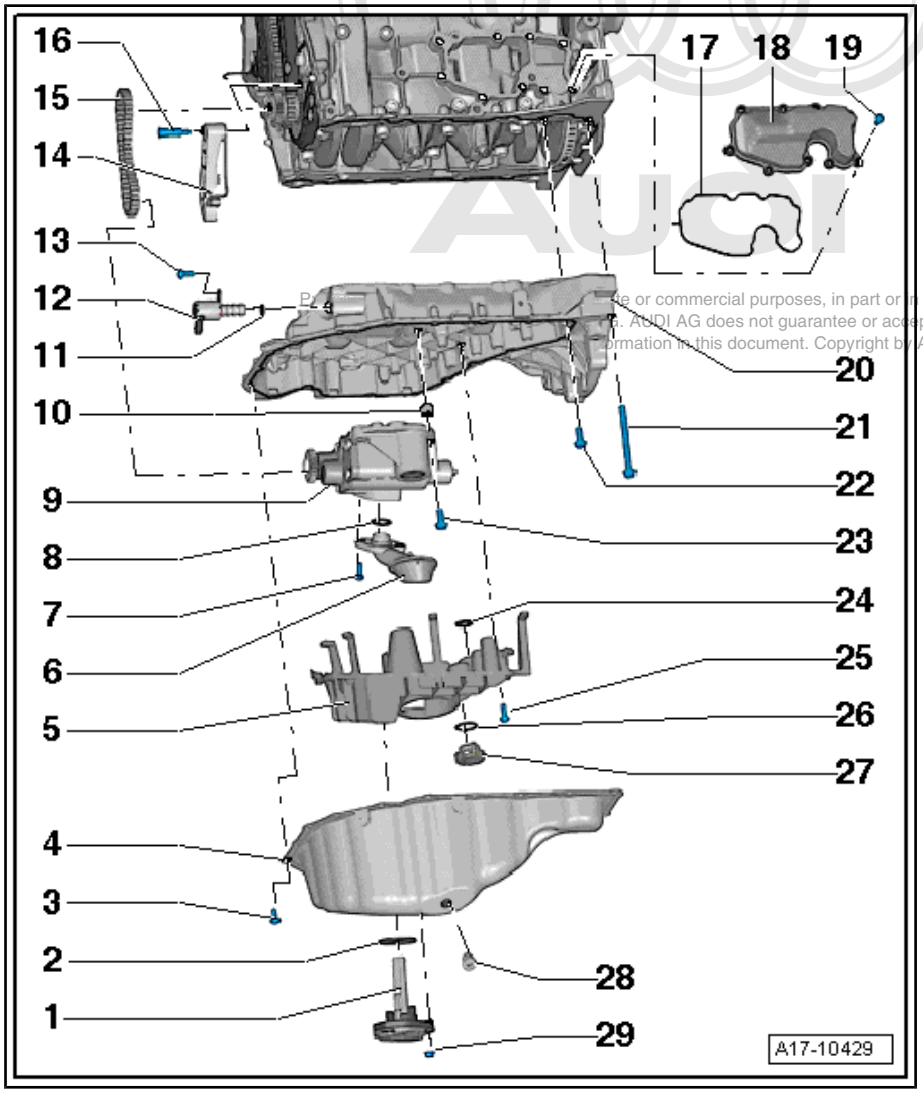

1 - Oil level and oil temperature sender - G266-
- ❑ Removing and installing ⇒ page 164

2 - Seal
- ❑ Renew

3 - Bolt
- ❑ Renew
- ❑ Tightening sequence ⇒ page 163

4 - Sump (bottom section)
- ❑ Removing and installing ⇒ page 165

5 - Baffle plate
- ❑ Renew

6 - Suction pipe
- ❑ Clean strainer if dirty

7 - Bolt
- ❑ 9 Nm

8 - O-ring
- ❑ Renew
- ❑ Lubricate

9 - Oil pump
- ❑ Removing and installing ⇒ page 168

10 - Centring sleeve

11 - O-ring
- ❑ Renew

12 - Valve for oil pressure control - N428-
- ❑ Removing and installing ⇒ page 179

13 - Bolt
- ❑ 9 Nm

14 - Chain tensioner

15 - Drive chain for oil pump
- ❑ Mark direction of rotation before removing

16 - Bolt
- ❑ 9 Nm

17 - Gasket
- ❑ Renew

18 - Coarse oil separator
- ❑ Removing and installing ⇒ page 174

19 - Bolt
- ❑ Tightening sequence ⇒ page 164

20 - Sump (top section)
- ❑ Removing and installing ⇒ page 170

21 - Bolt

- ❑ Renew
- ❑ Tightening sequence ⇒ page 163

22 - Bolt

- ❑ Renew
- ❑ Tightening sequence ⇒ page 163

23 - Bolt

- ❑ 20 Nm

24 - Seal

25 - Bolt

- ❑ 9 Nm

26 - Seal

27 - Non-return valve

28 - Oil drain plug

- ❑ Renew
- ❑ 30 Nm

29 - Nut

- ❑ 9 Nm

Tightening sequence for sump (bottom section)

– Tighten bolts in the sequence -1 ... 19- in two stages as follows:

1. Tighten bolts to 8 Nm.
2. Turn bolts 45° further.

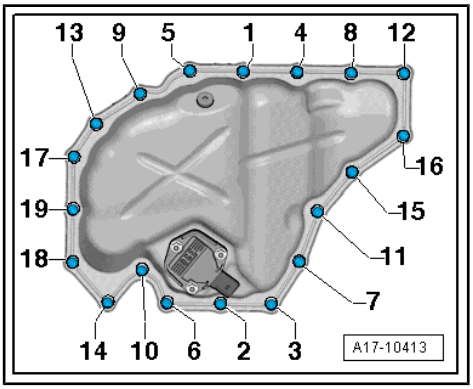

Tightening sequence for sump (top section)

– Tighten bolts in the sequence -1 ... 13- in two stages as follows:

– 1. Tighten bolts to 15 Nm.

– 2. Turn bolts 90° further.

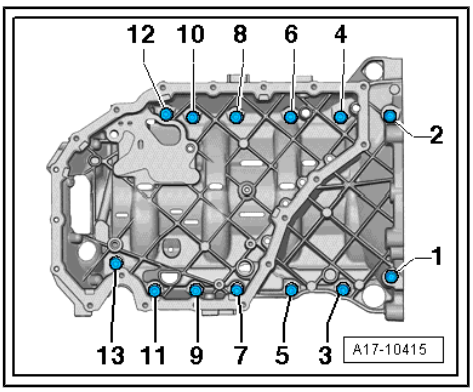

Tightening sequence for coarse oil separator

– Tighten bolts in the sequence -1 ... 9- to 9 Nm.

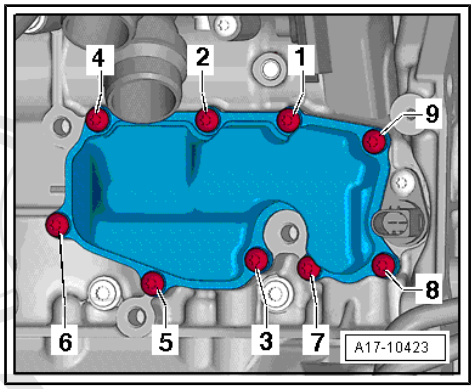

1.2 Removing and installing oil level and oil temperature sender - G266-

Removing

- Engine oil drained ⇒ Maintenance ; Booklet ; Engine oil; draining or extracting, renewing oil filter and filling up engine oil .

– Remove noise insulation ⇒ General body repairs, exterior; Rep. gr. 66 ; Noise insulation; Exploded view - noise insulation .

– Unplug electrical connector -3-.

– Remove nuts -1- and detach oil level and oil temperature sender - G266- -item 4-.

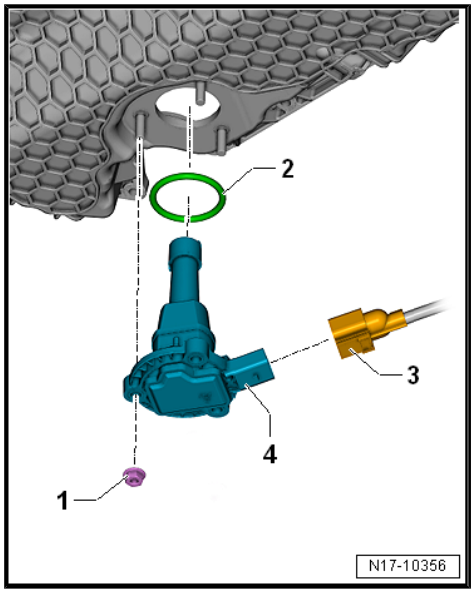

Installing

Installation is carried out in the reverse order; note the following:

– Fit seal -2-.

– Fill up engine oil and check oil level ⇒ Maintenance ; Booklet ; Engine oil: draining or extracting, renewing oil filter and filling up engine oil .

Tightening torques

♦ ⇒ “1.1 Exploded view - sump/oil pump”, page 161

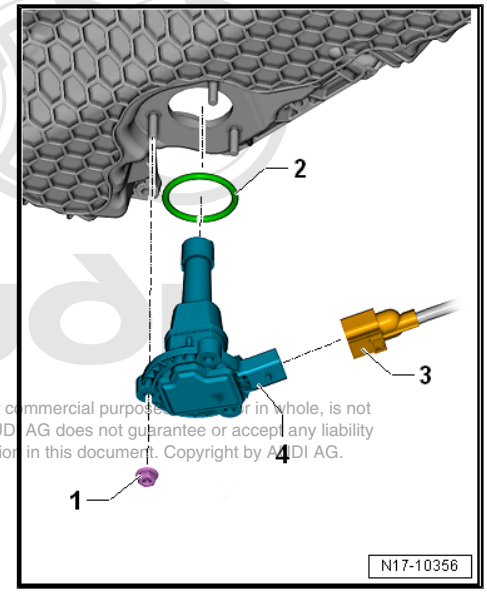

1.3 Engine oil

Refer to ⇒ Maintenance tables for viscosity grades, oil specifications and engine oil capacity.

1.4 Removing and installing sump (bottom section)

Special tools and workshop equipment required

♦ Used oil collection and extraction unit - VAS 6622A-

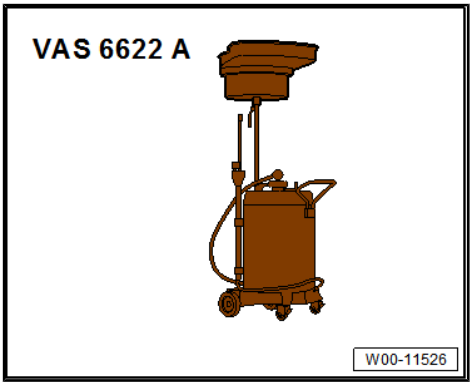

♦ Electric drill with plastic brush attachment

♦ Safety goggles

♦ Silicone sealant: ⇒ Electronic parts catalogue

Removing

– Remove subframe cross brace ⇒ Running gear, axles, steering; Rep. gr. 40 ; Subframe; Removing and installing subframe cross brace .

> ⚠ **Caution**
>
> *Risk of damage to running gear components.*
>
> ♦ *The vehicle must NOT be lowered onto its wheels if the engine/gearbox mountings, steering rack or subframe cross brace are not properly installed.*

– Remove nuts -arrows- and lower anti-roll bar.

– Place used oil collection and extraction unit - VAS 6622A- below engine and drain off engine oil.

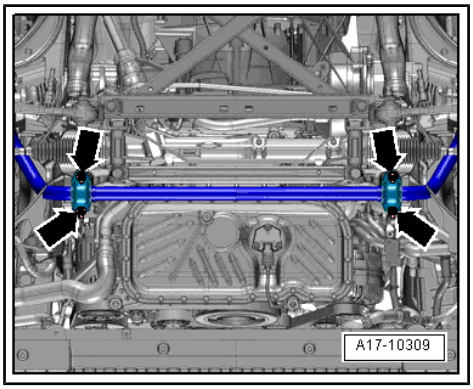

Note

Please observe requirements for disposal.

– Unplug connector from oil level and oil temperature sender - G266- -arrow-.

– Remove oil level and oil temperature sender - G266- .

– Move clear electrical wiring.

– Remove cross member for torque reaction support ⇒ page 47 .

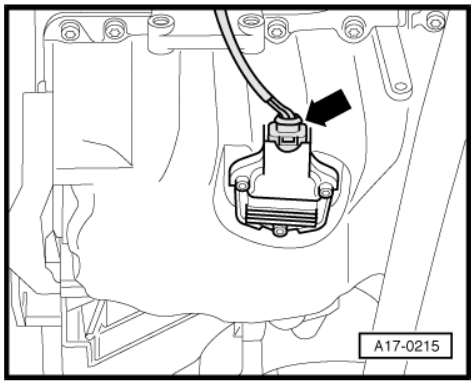

– Remove bolts -1 ... 19-.

– Take off sump: if necessary loosen it by striking lightly with a rubber hammer.

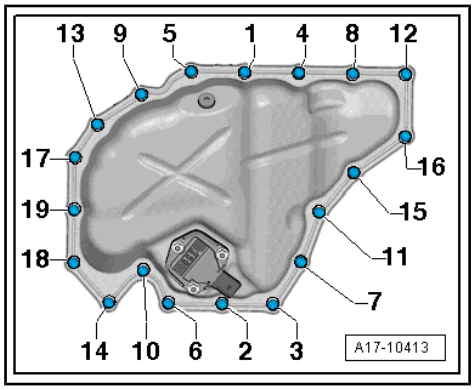

Installing

♦ Silicone sealant: ⇒ Electronic parts catalogue

Note

♦ *Note expiry date of silicone sealant.*

♦ *The sump must be installed within 5 minutes after applying the silicone sealant.*

♦ *Renew the bolts tightened with specified tightening angle.*

♦ *Renew seals, gaskets and self-locking nuts.*

– Spray sealing surface with sealant remover and wait for it to take effect.

– Remove sealant remaining on sump (top section) with flat scraper.

WARNING

Risk of eye injury.

♦ ***Wear safety goggles.***

– Remove sealant residue on sump (bottom section) using rotating plastic brush or similar.

– Clean sealing surfaces; they must be free of oil and grease.

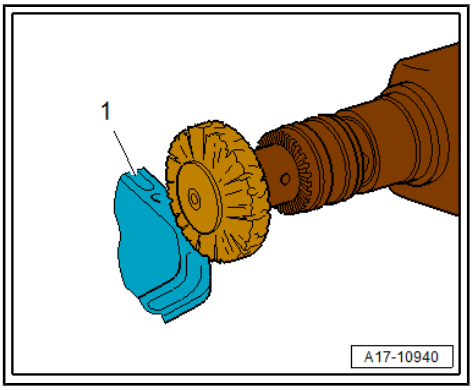

– Cut off nozzle of tube at front marking (∅ of nozzle approx. 3 mm).

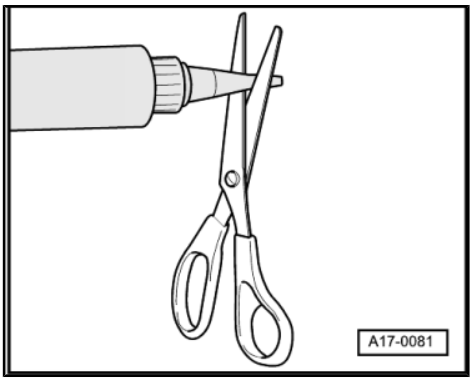

– Apply the bead of silicone sealant onto the clean sealing surface of the sump (bottom section), as illustrated.

♦ Thickness of sealant bead: 2 ... 3 mm

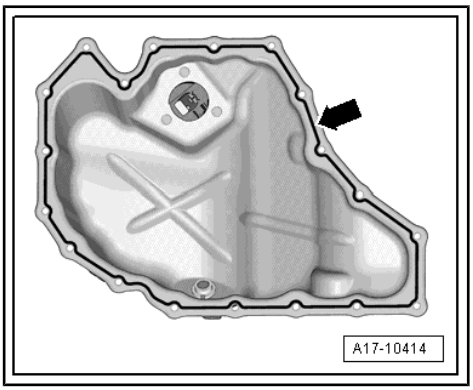

Note

♦ *The sump must be installed within 5 minutes after applying the silicone sealant.*

♦ *The bead of sealant must not be thicker than specified, otherwise excess sealant can enter the sump and obstruct the strainer in the oil intake pipe.*

– Immediately fit sump (bottom section) and tighten bolts; tightening sequence ⇒ page 163 .

Note

After fitting sump assembly, the sealant must dry for approx. 30 minutes. Then (and only then) fill the engine with engine oil.

– Fill with engine oil and check oil level ⇒ Maintenance ; Booklet 410 .

– Install cross member for torque reaction support ⇒ page 47 .

Further assembly is basically carried out in reverse order of dismantling.

Tightening torques

♦ ⇒ “1.1 Exploded view - sump/oil pump”, page 161

♦ Subframe cross brace, anti-roll bar ⇒ Running gear, axles, steering; Rep. gr. 40 ; Subframe; Exploded view - subframe

1.5 Removing and installing oil pump

Special tools and workshop equipment required

- Assembly tool - T10118-

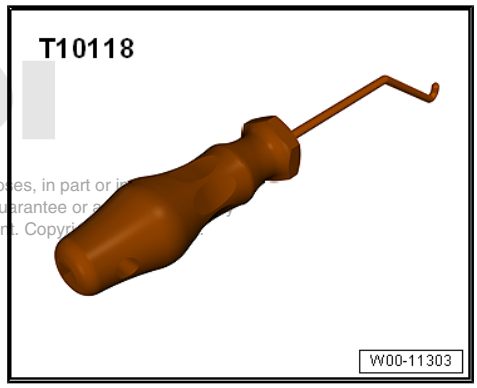

- Counterhold tool - T10355-

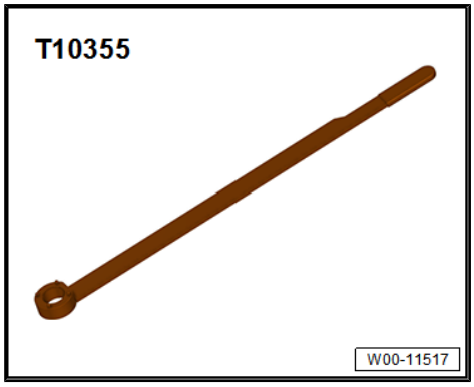

- Locking tool - T40265-

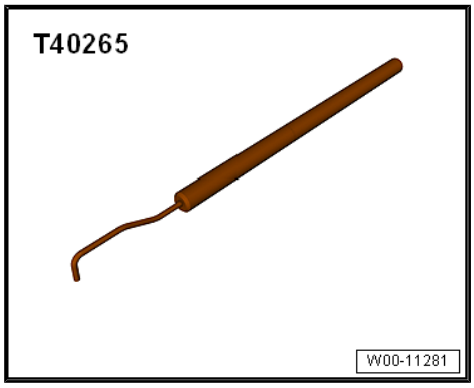

Removing

– Remove sump (bottom section) ⇒ page 165 .

– Remove baffle plate -arrows-.

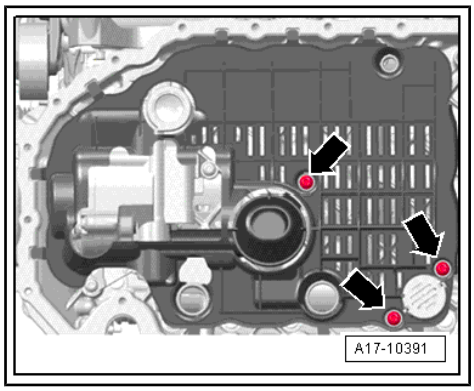

– Using assembly tool - T10118- , pull spring of chain tensioner in direction of -arrow- and secure with locking tool - T40265- .

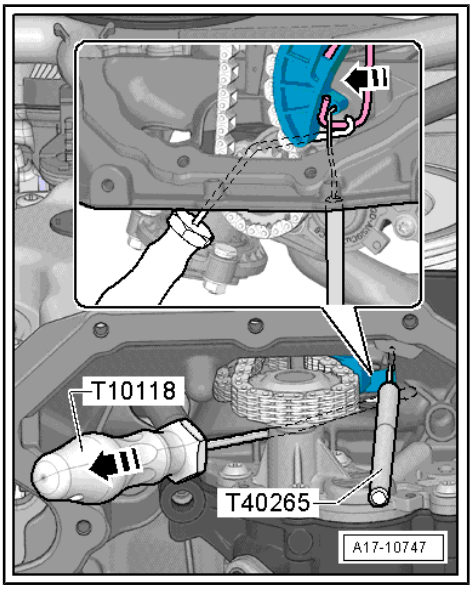

– Remove bolts -arrows- and detach oil pump.

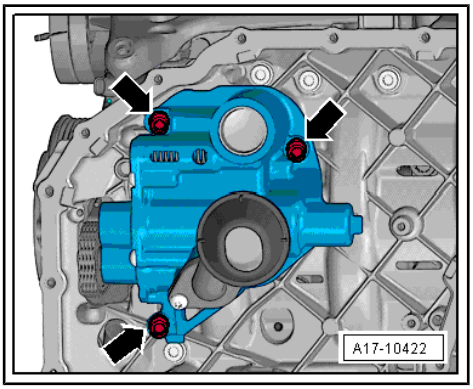

Installing

Installation is carried out in the reverse order; note the following:

– Check that both centring sleeves are fitted in oil pump.

– Before installing oil pump, check strainer in oil intake pipe and oil passages in sump (top section) for dirt.

– Guide oil pump sprocket into drive chain and install oil pump.

> **Caution**
>
> *Risk of irreparable damage to engine.*
>
> ♦ *The following step must be performed to ensure that spring of chain tensioner returns to installation position:*

– Using assembly tool - T10118- , pull spring of chain tensioner in direction of -arrow- and remove locking tool - T40265- .

– Fit new baffle plate and secure in position.

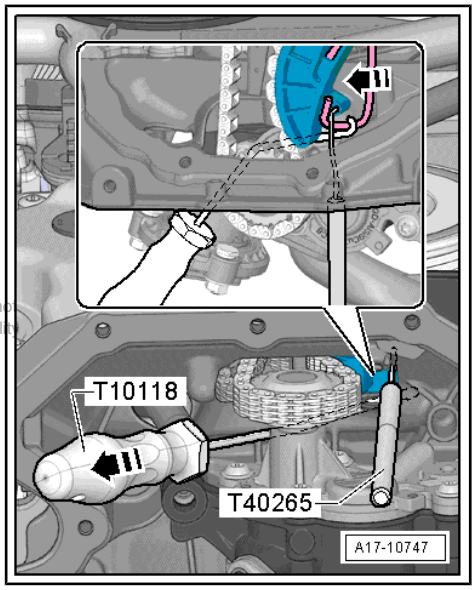

> **Note**
>
> *The plastic fins on the baffle plate are deformed permanently when tightening. The plastic fins make sure that the baffle plate rests on the contact surface without play and does not cause rattling noises. The baffle plate must therefore always be renewed.*

– Install sump (bottom section) ⇒ page 165 .

– Fill with engine oil and check oil level ⇒ Maintenance ; Booklet 410 .

Tightening torques

♦ ⇒ “1.1 Exploded view - sump/oil pump”, page 161

1.6 Removing and installing sump (top section)

Special tools and workshop equipment required

- ♦ Electric drill with plastic brush
- ♦ Safety goggles
- ♦ Silicone sealant ⇒ Electronic parts catalogue

Removing

- Gearbox removed ⇒ Rep. gr. 37 ; Removing and installing gearbox; Removing gearbox .

– Remove sump (bottom section) ⇒ page 165 .

– Remove rear sealing flange ⇒ page 71 .

– Remove oil pump ⇒ page 168 .

– Unplug electrical connector -1-.

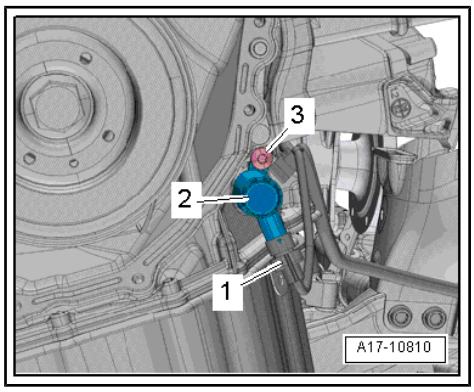

– Remove bolts -arrows-.

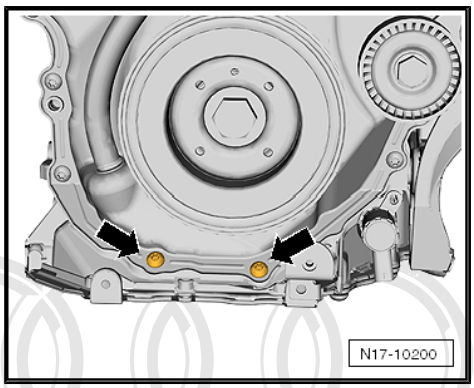

– Remove bolts -1 to 13- and detach sump (top section).

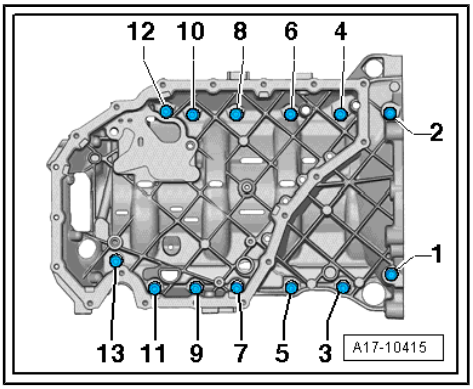

> **Caution**
>
> *Lever off sump (top section) at gearbox end first. Take care timing chain cover is not bent when levering off.*

Installing

- Silicone sealant ⇒ Electronic parts catalogue

> **Note**
>
> - *Note expiry date of silicone sealant.*
> - *The sump (top section) must be installed within 5 minutes after applying the silicone sealant.*
> - *Renew the bolts tightened with specified tightening angle.*
> - *Renew seals, gaskets and self-locking nuts.*

– Remove sealant residue from cylinder block using a flat scraper.

> **WARNING**
>
> *Risk of eye injury.*
>
> - *Wear safety goggles.*

– Remove sealant residue on sump (top section) using rotating plastic brush or similar.

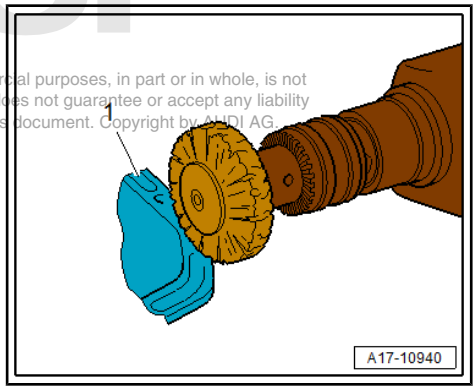

> **Note**
>
> *Check if timing chain cover is deformed. For this purpose, first fit sump (top section) without sealant and determine gap between cover and sump (top section). If the cover is deformed and cannot be straightened, renew cover after installing sump (top section).*

– Clean sealing surfaces; they must be free of oil and grease.

– Check oil passages in sump (top section) and crankcase for contamination.

– Cut off nozzle of tube at front marking (∅ of nozzle approx. 3 mm).

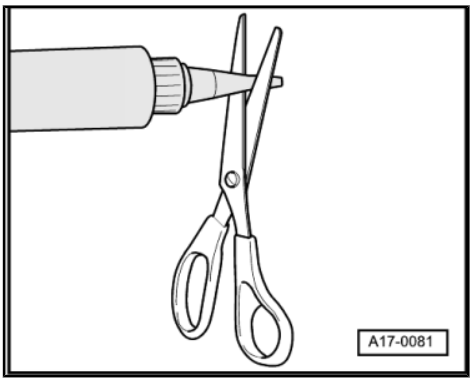

Caution

Make sure lubrication system is not clogged by excess sealant.

- *The bead of sealant must not be thicker than specified.*

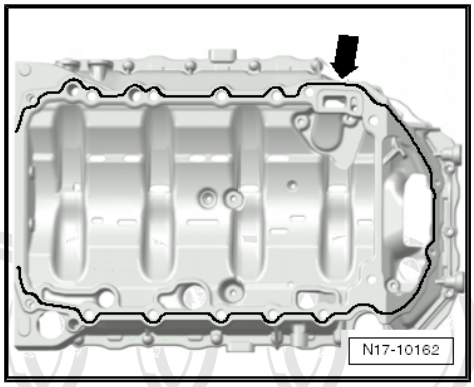

- Thickness of sealant bead: 2 ... 3 mm.

– Apply silicone sealant onto clean sealing surface of sump (top section) as illustrated -arrow-.

– Apply silicone sealant between cylinder block and timing chain cover (bottom), as illustrated -arrows-.

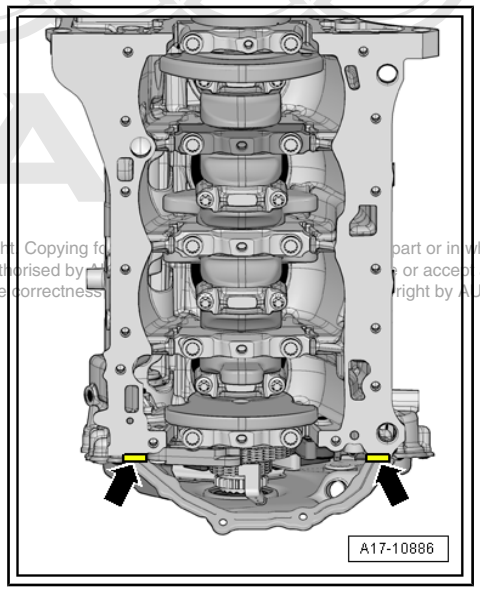

Note

- *The sump (top section) must be installed within 5 minutes after applying the silicone sealant.*
- *The bead of sealant must not be thicker than specified, otherwise excess sealant can enter the sump and obstruct the strainer in the oil intake pipe.*

- Sump (top section) and crankcase must be flush at gearbox end.

– Immediately fit sump (top section) and tighten bolts, tightening torque ⇒ page 163 .

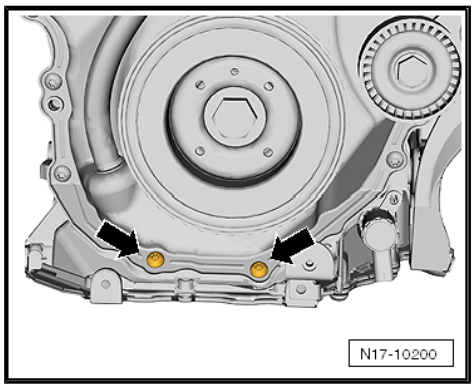

– Fit bolts -arrows-. Tightening torque ⇒ Item 13 (page 94)

– Install rear sealing flange ⇒ page 71 .

– Install oil pump ⇒ page 168 .

– Fit new baffle plate and secure in position.

Further assembly is basically carried out in reverse order of dismantling.

– Fill with engine oil and check oil level ⇒ Maintenance ; Booklet 410 .

Tightening torques

- ⇒ “1.1 Exploded view - sump/oil pump”, page 161

2 Engine oil cooler

⇒ "2.1 Removing and installing engine oil cooler", page 173

2.1 Removing and installing engine oil cooler

Removing

WARNING

Hot steam/hot coolant can escape - risk of scalding.

- *The cooling system is under pressure when the engine is hot.*
- *Cover filler cap on coolant expansion tank with a cloth and open carefully to dissipate pressure.*

– Drain coolant ⇒ page 184 .

– Remove bracket for ancillaries ⇒ page 62 .

– Unscrew bolts -4 and 5- and remove engine oil cooler -3- together with seal -2-.

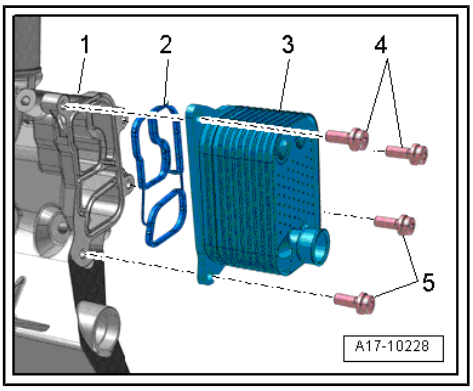

Installing

Installation is carried out in the reverse order; note the following:

Note

- *Renew gaskets and seals.*
- *Secure all hose connections with the correct type of hose clips (same as original equipment) ⇒ Electronic parts catalogue .*

– Install engine oil cooler -3- with new seal -2-.

– Install bracket for ancillaries ⇒ page 62 .

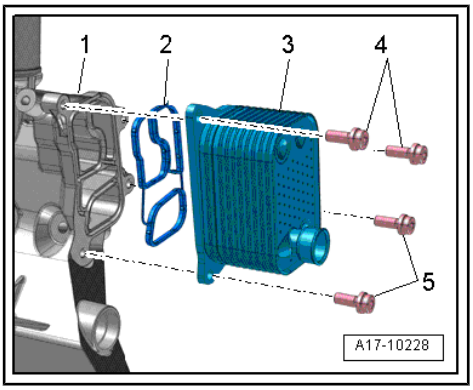

Note

Do not reuse coolant.

– Fill up with coolant ⇒ page 186 .

– Fill with engine oil and check oil level ⇒ Maintenance ; Booklet 410 .

Tightening torques

- ⇒ "4.1 Exploded view - oil filter/oil pressure switches", page 176

3 Crankcase breather

⇒ “3.1 Removing and installing oil separator”, page 174

3.1 Removing and installing oil separator

Removing

– Remove engine mounting (left-side) ⇒ page 46 .
– Unplug electrical connector -2-.
– Lift retaining clips -1, 4- and disconnect coolant hoses.
– Remove bolt -3- and place coolant expansion tank to one side.

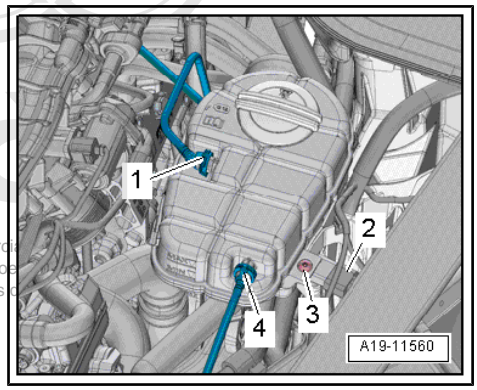

– Release hose clips -arrows- and take out air hose -1-.

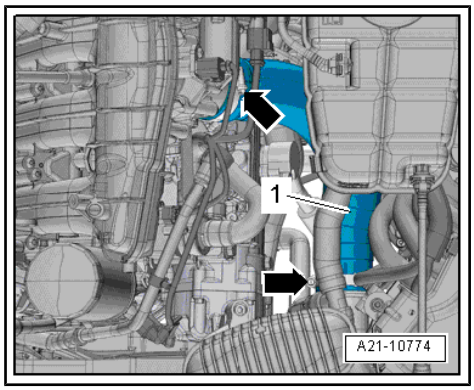

– Unscrew bolts -arrows- and remove engine support (left-side).

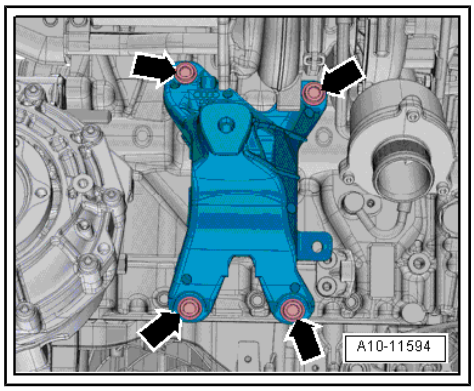

– Unscrew bolts -1 ... 9- and remove coarse oil separator.

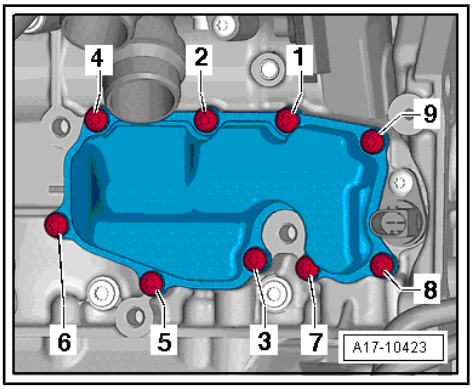

Installing

Installation is carried out in the reverse order; note the following:

Note

Renew gasket and O-rings.

– Connect coolant hoses with plug-in connector ⇒ page 218 .

– Check coolant level ⇒ page 186 .

Tightening torques

- ⇒ Fig. ""Tightening sequence for coarse oil separator"" , page 164
- ⇒ "2.1 Exploded view - assembly mountings", page 42
- ⇒ "2.2 Exploded view - hose connections for charge air system", page 240

4 Oil filter/oil pressure switches

4.1 Exploded view - oil filter/oil pressure switches

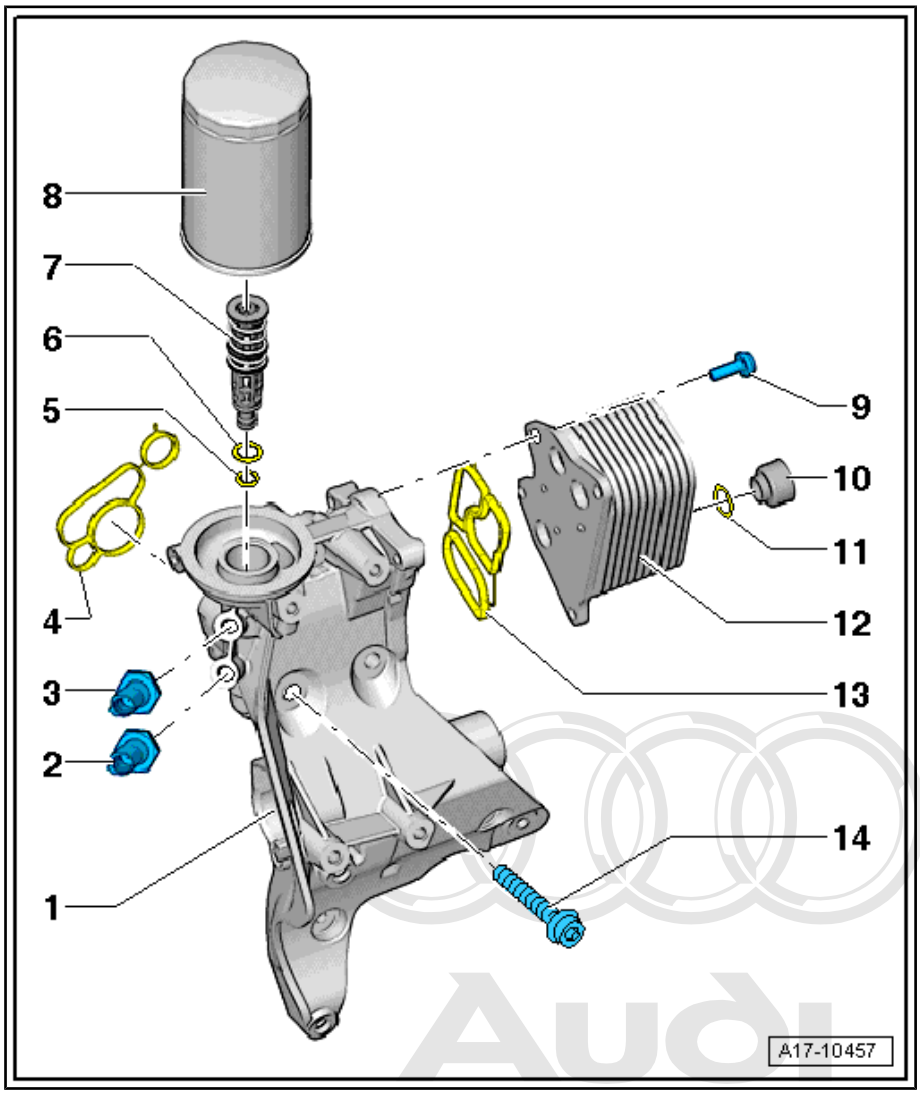

1 - Bracket for ancillaries

- ❑ Removing and installing ⇒ page 62

2 - Oil pressure switch - F22-

- ❑ Blue insulation
- ❑ Removing and installing ⇒ page 177
- ❑ Checking ⇒ Vehicle diagnostic tester
- ❑ 20 Nm

3 - Oil pressure switch for reduced oil pressure - F378-

- ❑ Brown insulation
- ❑ Removing and installing ⇒ page 178
- ❑ Checking ⇒ Vehicle diagnostic tester
- ❑ 20 Nm

4 - Gasket

- ❑ Renew

5 - O-ring

- ❑ Not available as replacement part, supplied together with valve unit

6 - O-ring

- ❑ Not available as replacement part, supplied together with valve unit

7 - Valve unit

- ❑ With O-rings

8 - Oil filter

- ❑ Removing and installing ⇒ Maintenance ; Booklet 410

9 - Bolt

- ❑ 23 Nm

10 - Connection

11 - Seal

- ❑ Renew
- ❑ Lubricate with coolant additive; coolant ⇒ Electronic parts catalogue

12 - Engine oil cooler

- ❑ See note ⇒ page 161
- ❑ Ensure clearance from surrounding components
- ❑ Removing and installing ⇒ page 173

13 - Gasket

- ❑ Renew

14 - Bolt

- ❑ Tightening sequence ⇒ page 56

4.2 Removing and installing oil pressure switch - F22-

Removing

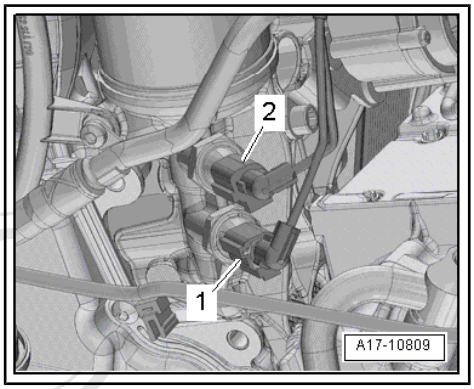

Note

Place a cloth underneath bracket for ancillaries to catch any escaping oil.

– Unplug electrical connector -1- on oil pressure switch - F22- .

– Unscrew oil pressure switch - F22- .

Installing

Installation is carried out in the reverse order; note the following:

Note

- ♦ *Renew seal.*
- ♦ *Fit the new oil pressure switch - F22- into the connection immediately to avoid loss of oil.*

– Check oil level ⇒ Maintenance ; Booklet 410 .

Tightening torques

- ♦ ⇒ “4.1 Exploded view - oil filter/oil pressure switches”, page 176

4.3 Removing and installing oil pressure switch for reduced oil pressure - F378-

Removing

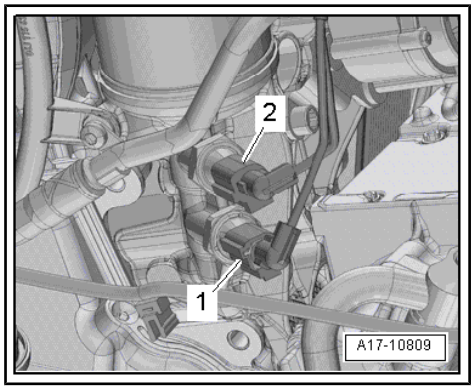

Note

Place a cloth underneath bracket for ancillaries to catch any escaping oil.

– Unplug electrical connector -2- at oil pressure switch for reduced oil pressure - F378- .

– Unscrew oil pressure switch for reduced oil pressure - F378- .

Installing

Installation is carried out in the reverse order; note the following:

Note

- *Renew seal.*
- *Fit the new oil pressure switch for reduced oil pressure - F378- into the connection immediately to avoid loss of oil.*

– Check oil level ⇒ Maintenance ; Booklet 410 .

Tightening torques

- ⇒ “4.1 Exploded view - oil filter/oil pressure switches”, page 176

4.4 Checking oil pressure

Special tools and workshop equipment required

- Oil pressure tester - V.A.G 1342-

Test requirements

- Oil level OK
- Engine oil temperature at least 80°C (radiator fan must have run once).

Test sequence

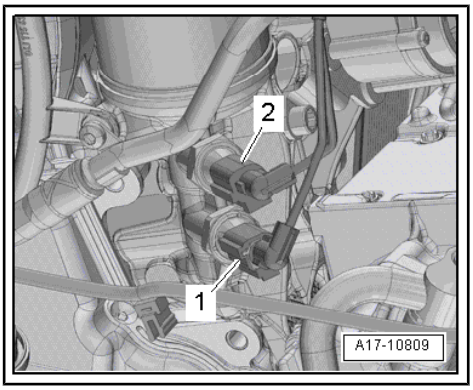

Note

Place a cloth underneath bracket for ancillaries to catch any escaping oil.

– Unplug electrical connector -2- at oil pressure switch for reduced oil pressure - F378- .
– Unscrew oil pressure switch for reduced oil pressure - F378- .
– Screw oil pressure tester - V.A.G 1342- into oil filter bracket in place of oil pressure switch.
– Screw oil pressure switch for reduced oil pressure - F378- into oil pressure tester - V.A.G 1342- .
– Start engine.

- Oil pressure at idling speed: 1.2 ... 2.0 bar.
- Oil pressure at 2000 rpm: 1.6 ... 2.2 bar.
- Oil pressure at 3700 rpm: 3.0 ... 4.0 bar.

Note

During the run-in period, the oil pressure at 2000 rpm can be between 3.0 and 4.0 bar.

Assembling

– Install oil pressure switch.

Tightening torques

♦ ⇒ “4.1 Exploded view - oil filter/oil pressure switches”, page 176

4.5 Removing and installing valve for oil pressure control - N428-

Special tools and workshop equipment required

♦ Used oil collection and extraction unit - VAS 6622A-

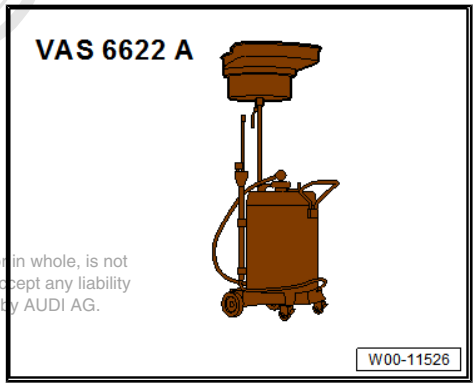

Removing

– Remove noise insulation (front) ⇒ General body repairs, exterior; Rep. gr. 66 ; Noise insulation; Removing and installing noise insulation .

– Position used oil collection and extraction unit - VAS 6622A- below engine.
– Unplug electrical connector -1-.
– Remove bolt -2- and detach valve for oil pressure control - N428- -item 3-.

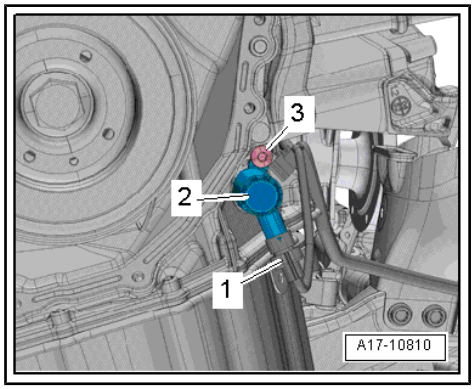

Installing

Installation is carried out in the reverse order; note the following:

Note

Fit new O-ring.

Tightening torques

- ⇒ “1.1 Exploded view - sump/oil pump”, page 161
- ⇒ General body repairs, exterior; Rep. gr. 66 ; Noise insulation; Exploded view - noise insulation

19 – Cooling

1 Cooling system/coolant

⇒ “1.1 Connection diagram - coolant hoses”, page 181
⇒ “1.2 Checking cooling system for leaks”, page 183
⇒ “1.3 Draining and filling cooling system”, page 184

1.1 Connection diagram - coolant hoses

Note

- *Blue = Large coolant circuit.*
- *Red = Small coolant circuit.*
- *Brown = Heating circuit.*
- *Green = Coolant circuit for power and control electronics for electric drive (low-temperature cooling circuit).*
- *Orange = Coolant circuit for electric drive motor - V141- .*
- *Violet = Coolant circuit for ATF.*
- *Arrows show direction of coolant flow.*

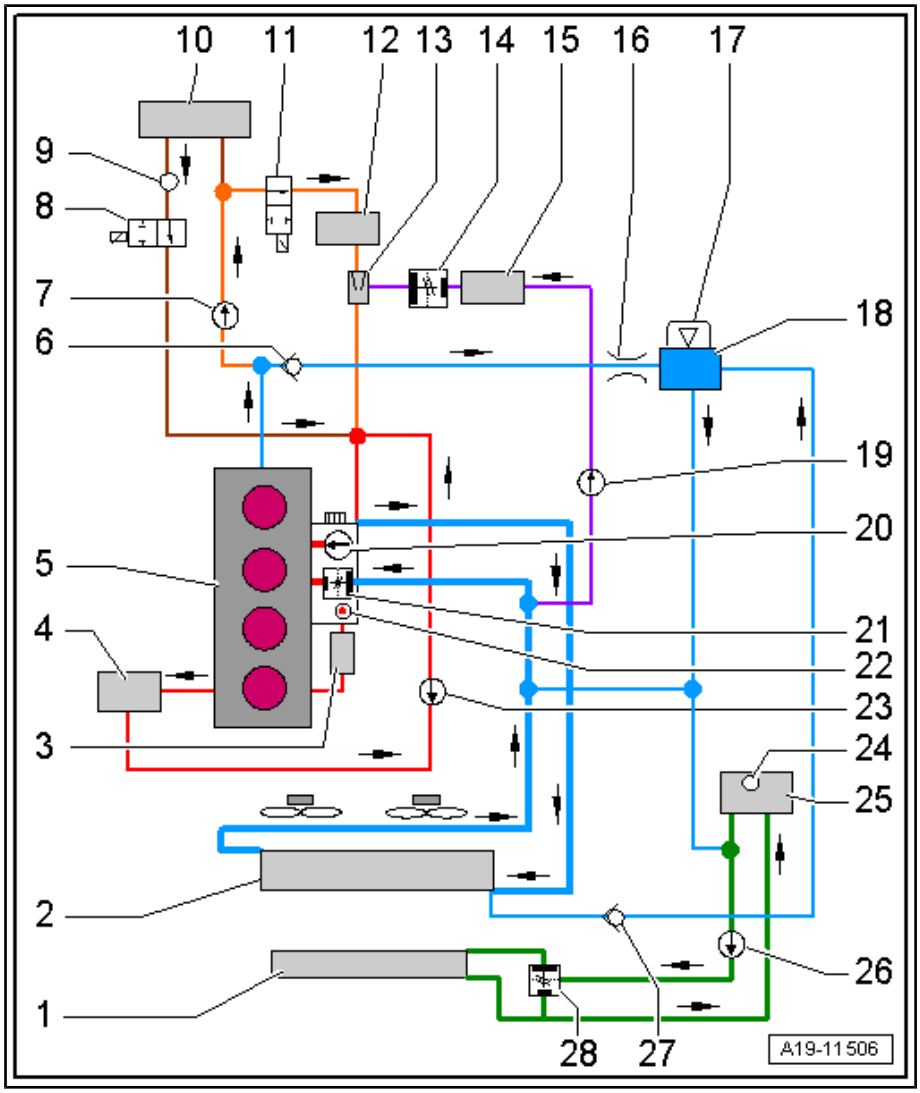

1 - Radiator
- ❑ For coolant circuit for power and control electronics for electric drive

2 - Radiator

3 - Engine oil cooler

4 - Turbocharger

5 - Cylinder head/cylinder block

6 - Non-return valve

7 - Coolant circulation pump - V50-

8 - Coolant shut-off valve - N82-

9 - Bleeder hole

10 - Heat exchanger for heater
- ❑ Removing and installing ⇒ Heating, air conditioning; Rep. gr. 87 ; Front air conditioning unit; Removing and installing heat exchanger

11 - Solenoid for coolant circuit - N492-

12 - Electric drive motor - V141-

13 - Suction-jet pump

14 - Thermostat
- ❑ For coolant circuit for ATF

15 - ATF cooler

16 - Restrictor
- ❑ Located in coolant hose

17 - Filler cap for expansion tank
- ❑ Checking pressure relief valve ⇒ page 184

18 - Coolant expansion tank

19 - Coolant pump for high-temperature circuit - V467-

20 - Coolant pump

21 - Thermostat

22 - Coolant temperature sender - G62-

23 - Continued coolant circulation pump - V51-

24 - Bleeder screw

25 - Power and control electronics for electric drive - JX1-

26 - Coolant pump for low-temperature circuit - V468-

27 - Non-return valve

28 - Thermostat
- ❑ For coolant circuit for power and control electronics for electric drive

1.2 Checking cooling system for leaks

Special tools and workshop equipment required

- Cooling system tester - V.A.G 1274 B-

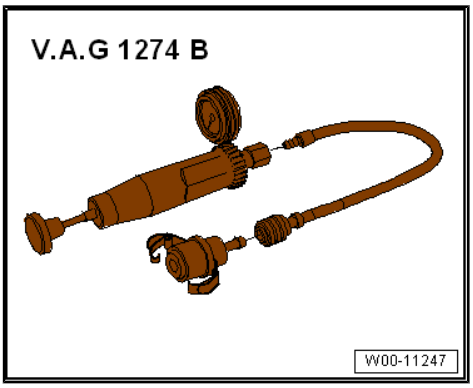

- Adapter for cooling system tester - V.A.G 1274/8-

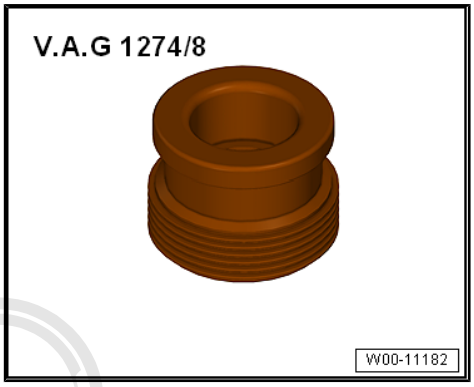

- Adapter for cooling system tester - V.A.G 1274/9-

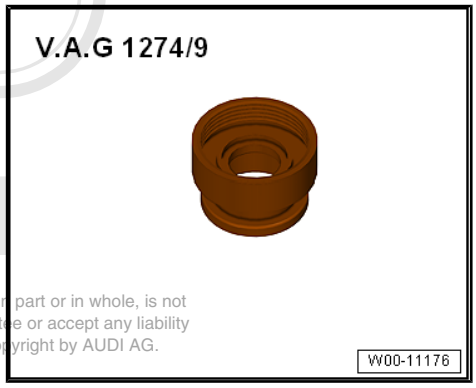

Procedure

- Engine must be warm.

> ⚠ **WARNING**
>
> *Hot steam/hot coolant can escape - risk of scalding.*
>
> - *The cooling system is under pressure when the engine is hot.*
> - *Cover filler cap on coolant expansion tank with a cloth and open carefully to dissipate pressure.*

– Open filler cap on coolant expansion tank.

– Fit cooling system tester - V.A.G 1274 B- with adapter - V.A.G 1274/8- onto coolant expansion tank.
– Using hand pump on tester, build up a pressure of approx. 1.0 bar.
– If this pressure is not maintained, locate and rectify leaks.

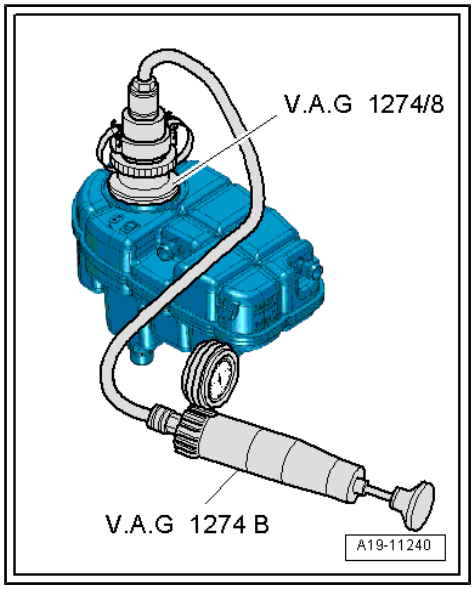

Checking pressure relief valve in filler cap

– Fit cooling system tester - V.A.G 1274 B- with adapter - V.A.G 1274/9- onto filler cap.
– Build up pressure with hand pump on cooling system tester.
♦ The pressure relief valve should open at a pressure of 1.4 ... 1.6 bar.

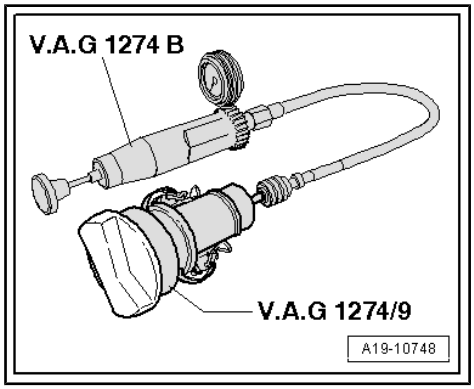

1.3 Draining and filling cooling system

Special tools and workshop equipment required

- Adapter for cooling system tester - V.A.G 1274/8-
- Pipe for cooling system tester - V.A.G 1274/10-
- Cooling system charge unit - VAS 6096-
- Drip tray for workshop hoist - VAS 6208-
- Hose clip pliers - VAS 6362-
- Refractometer - T10007 A-

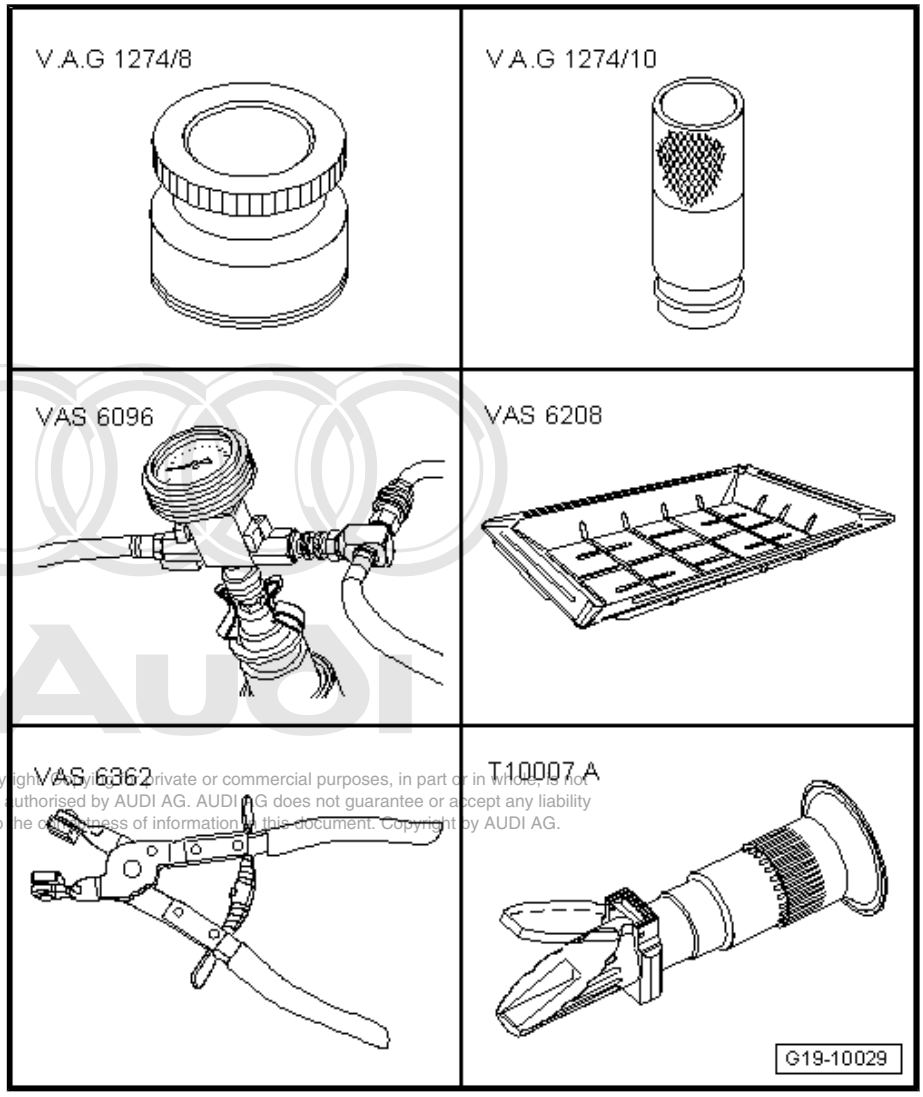

Draining

> ⚠ **WARNING**
>
> *Hot steam/hot coolant can escape - risk of scalding.*
>
> - *The cooling system is under pressure when the engine is hot.*
> - *Cover filler cap on coolant expansion tank with a cloth and open carefully to dissipate pressure.*

– Open filler cap -arrow- on coolant expansion tank.

– Remove noise insulation panels ⇒ General body repairs, exterior; Rep. gr. 66 ; Noise insulation; Removing and installing noise insulation .

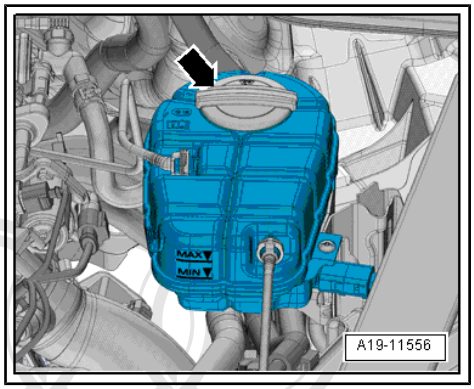

– Place drip tray for workshop hoist - VAS 6208- beneath engine.

– Lift retaining clip -arrow- and detach connection (bottom right) from radiator.

– Drain off coolant.

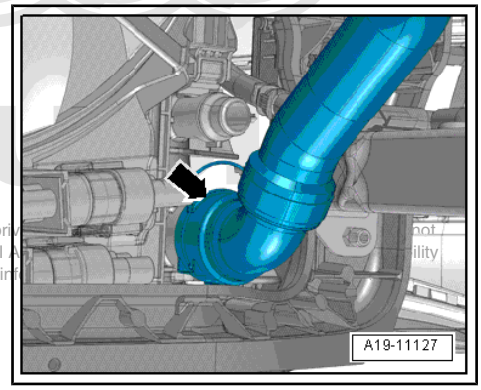

– Release hose clip -arrow- and detach coolant hose.

– Drain off coolant.

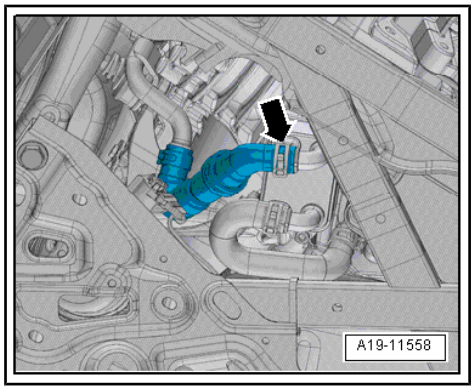

Filling

Caution

Always use distilled water for mixing coolant additives as this ensures optimum corrosion protection.

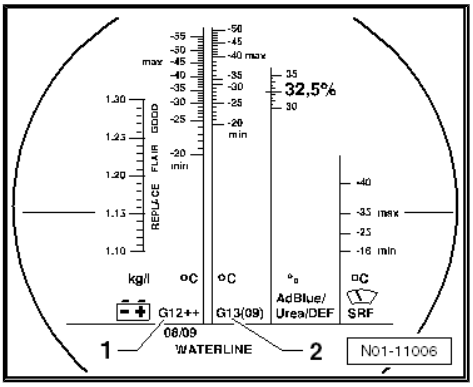

Note

- *The effectiveness of the coolant is greatly influenced by the quality of the water with which it is mixed. Because water may contain different substances depending on the country or even the region, the water quality to be used for cooling systems has been specified. Distilled water meets all the requirements and is therefore recommended for use when topping up or filling up with coolant.*
- *Use only coolant additives listed in the ⇒ Electronic parts catalogue (ETKA) . Other coolant additives could seriously impair in particular the anti-corrosion properties. The resulting damage could lead to loss of coolant and consequently to serious engine damage.*
- *Coolant with the recommended mixture ratio prevents frost and corrosion damage and stops scaling. At the same time it raises the boiling point of the fluid in the system. For this reason the cooling system must be filled all year round with the correct coolant additive.*

- *Because of its high boiling point, the coolant improves engine reliability under heavy loads, particularly in countries with tropical climates.*
- *The refractometer - T10007A- MUST be used to determine the current level of frost protection.*
- *The mixture must guarantee frost protection down to at least -25 °C (in countries with arctic climate: down to -36 °C). The amount of antifreeze should only be increased if greater frost protection is required in very cold climates. This must only be down to -48 °C, however, as otherwise the cooling efficiency of the coolant is impaired.*
- *The coolant concentration must not be reduced by adding water even in warmer seasons and in warmer countries. Frost protection must be provided to at least -25 °C.*
- *Read off the level of frost protection on the scale for the relevant coolant additive.*
- *The temperature indicated on the refractometer - T10007A- corresponds to the temperature at which the first ice crystals can form in the coolant.*
- *Do not reuse coolant.*
- *Only use water/coolant additive as a lubricant for coolant hoses.*

Recommended mixture ratio for coolant

- Coolant (40 %) and water (60 %) for frost protection to -25 °C
- Coolant (50 %) and water (50 %) for frost protection to -36 °C
- Coolant: ⇒ Electronic parts catalogue (ETKA)

– Fit connection with plug-in connector at radiator (bottom right) ⇒ page 218 .

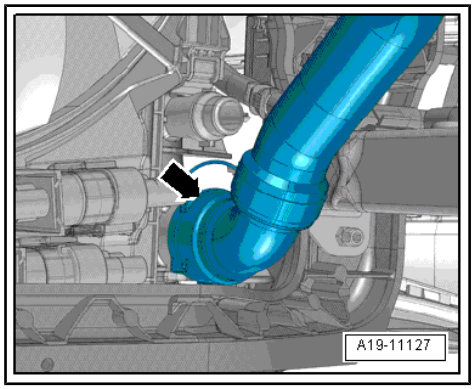

– Connect coolant hose to gear oil cooler using hose clip -arrow-.

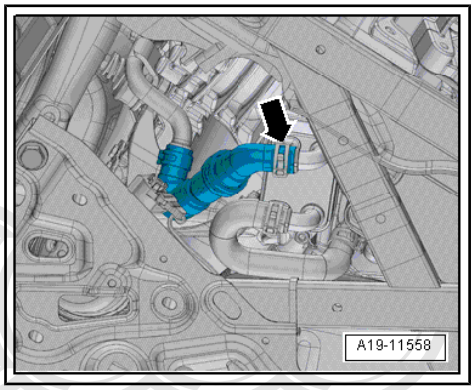

– Fill reservoir of -VAS 6096- with 10 litres of premixed coolant (according to recommended ratio; for recommended ratio see ⇒ page 187).

– Fit adapter for cooling system tester - V.A.G 1274/8- onto coolant expansion tank.

– Attach cooling system charge unit - VAS 6096- to adapter - V.A.G 1274/8- .

– Run vent hose -1- into a small container -2-.

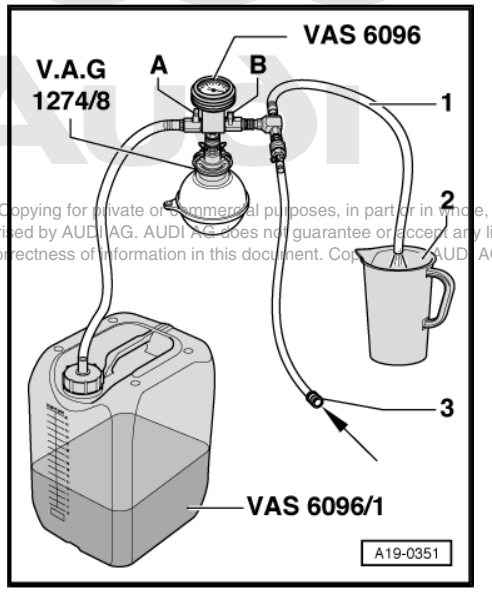

Note

The vented air draws along a small amount of coolant, which should be collected.

– Close both valves -A- and -B- (turn lever at right angles to direction of flow).

– Connect hose -3- to compressed air.

• Pressure: 6 ... 10 bar.

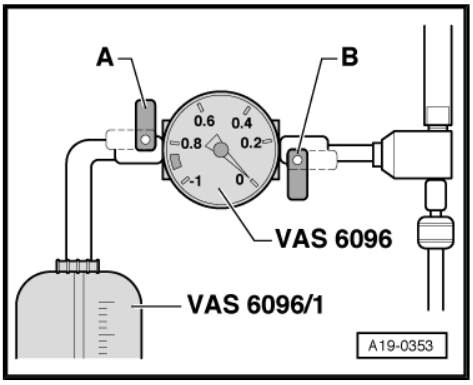

– Open valve -B- by setting lever in direction of flow.
- The suction jet pump generates a partial vacuum in the cooling system; the needle on the gauge should move into the green zone.
– Also briefly open valve -A- (turn lever in direction of flow) so that hose on reservoir of -VAS 6096- can fill with coolant.
– Close valve -A- again.
– Leave valve -B- open for another 2 minutes.
- The suction jet pump continues to generate a partial vacuum in the cooling system; the needle on the gauge should remain in the green zone.
– Close valve -B-.
- The needle on the gauge should stop in the green zone. The vacuum level in the cooling system is then sufficient for subsequent filling.

Note

♦ *If the needle does not reach the green zone, repeat the process.*

♦ *Check cooling system for leaks if the vacuum is not maintained.*

– Detach compressed air hose.
– Open valve -A-.
- The vacuum in the cooling system causes the coolant to be drawn out of the reservoir of -VAS 6096- ; the cooling system is then filled.
– Detach cooling system charge unit - VAS 6096- from adapter -V.A.G 1274/8- on coolant expansion tank.

– Attach pipe -V.A.G 1274/10- onto adapter -V.A.G 1274/8- .
– Remove plenum chamber cover ⇒ General body repairs, exterior; Rep. gr. 50 ; Bulkhead; Removing and installing plenum chamber cover .

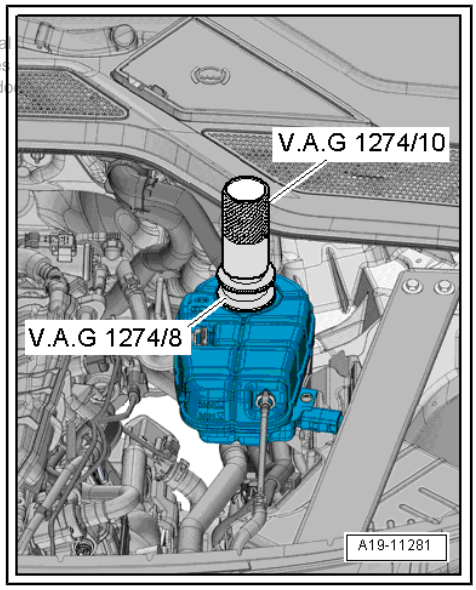

– Open bleeder screw -arrow-.
– Fill up with coolant until it flows out at bleeder hole in coolant hose.
– Close bleeder screw.
– Remove lock carrier cover ⇒ General body repairs, exterior; Rep. gr. 63 ; Bumper (front); Removing and installing attachments .

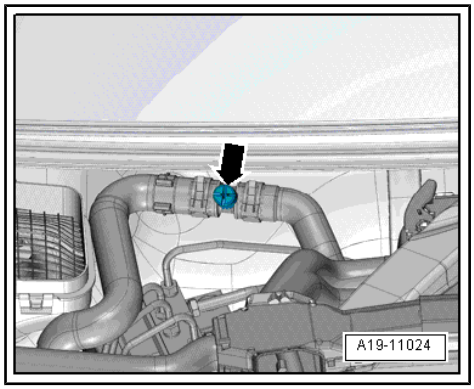

– Remove bolts -1, 3- and detach longitudinal member (top left) -2-.

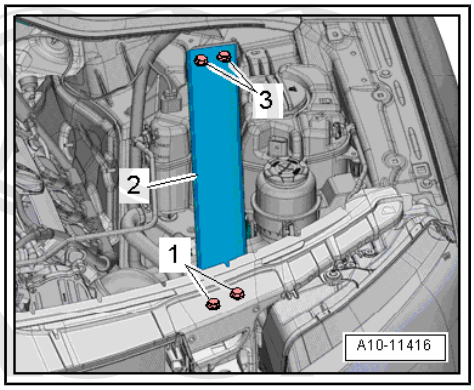

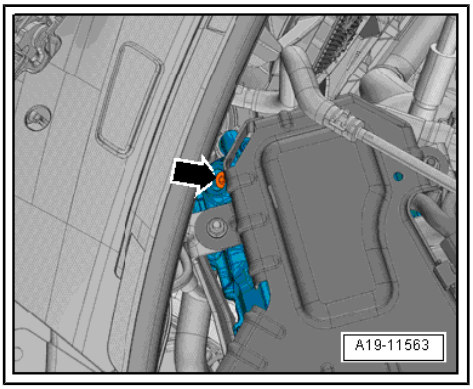

– Open bleeder screw -arrow-.
– Fill up with coolant until it comes out at power and control electronics for electric drive - JX1- .
– Close bleeder screw -arrow-.
– On vehicles with auxiliary heater, switch heater on (for about 30 seconds) and then off again.
– Close filler cap on expansion tank.
– Start engine.
– Set temperature to “HI” in all zones.
– Switch off air conditioner compressor (press ECON button).
– Run engine for 3 minutes at 2000 rpm.
– Allow engine to run at idling speed until both large coolant hoses at radiator become warm.
– Run engine for 2 minutes at 2000 rpm.
– Switch off ignition and allow engine to cool down.
– Install lock carrier cover ⇒ General body repairs, exterior; Rep. gr. 63 ; Bumper (front); Removing and installing attachments .
– Install plenum chamber cover ⇒ General body repairs, exterior; Rep. gr. 50 ; Bulkhead; Removing and installing plenum chamber cover .

WARNING

Hot steam/hot coolant can escape - risk of scalding.

- *The cooling system is under pressure when the engine is hot.*
- *Cover filler cap on coolant expansion tank with a cloth and open carefully to dissipate pressure.*

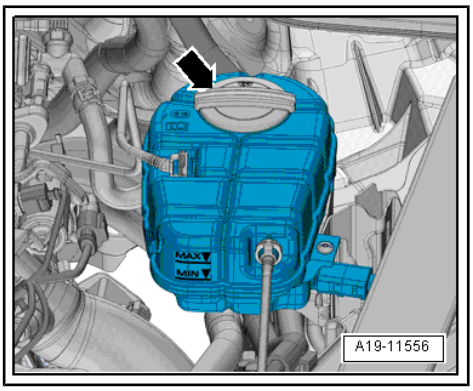

– Check coolant level.

- The coolant level must be at the “MAX” marking when the engine is cold.
- The coolant level can be above the “MAX” marking when the engine is warm.

Tightening torques

- Upper longitudinal member ⇒ General body repairs, exterior; Rep. gr. 50 ; Lock carrier; Exploded view - lock carrier
- ⇒ General body repairs, exterior; Rep. gr. 66 ; Noise insulation; Exploded view - noise insulation

2 Coolant pump/thermostat assembly

2.1 Exploded view - coolant pump and thermostat

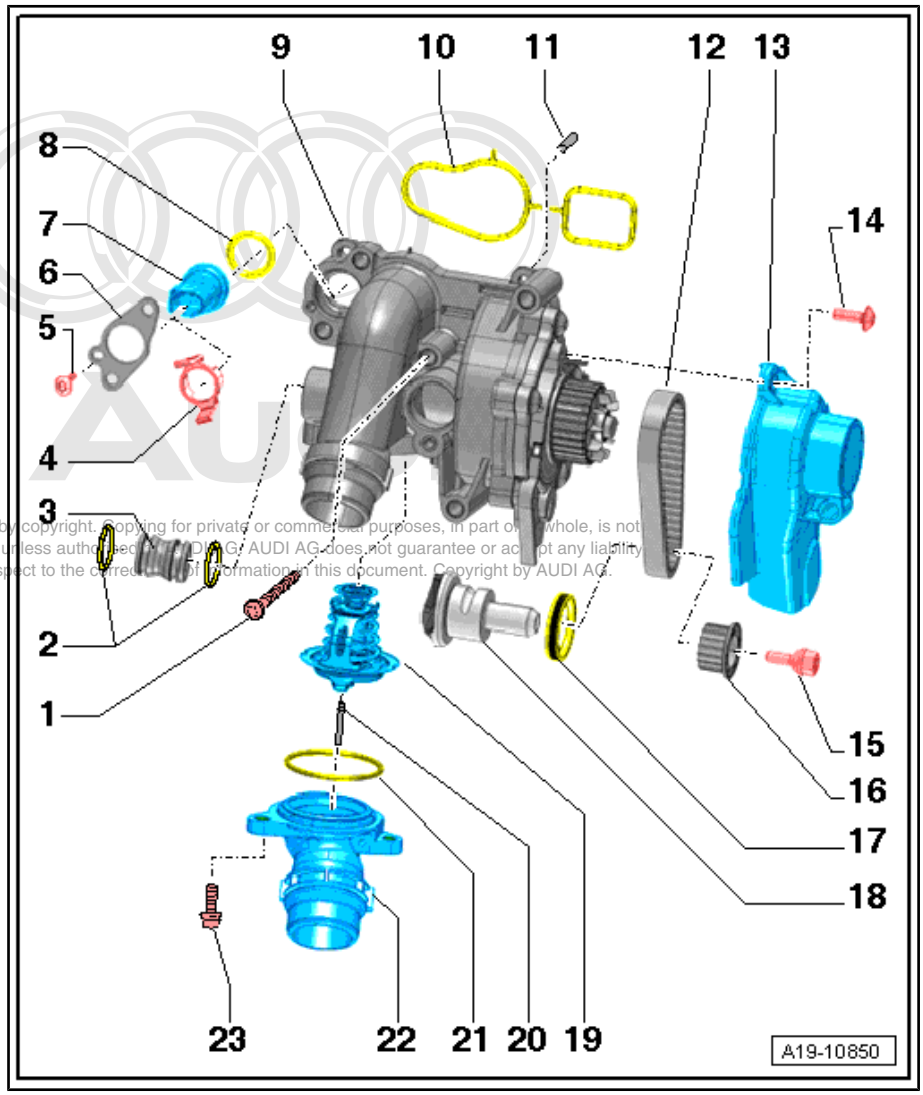

1 - Bolt
- ❑ Tightening sequence ⇒ page 193

2 - O-rings
- ❑ Renew

3 - Connection

4 - Retaining clip
- ❑ Only on clip-on version
- ❑ Check that it is securely seated

5 - Bolt
- ❑ 4 Nm
- ❑ Only on bolted version

6 - Retaining plate
- ❑ Only on bolted version

7 - Coolant temperature sender - G62-
- ❑ Removing and installing ⇒ page 205

8 - O-ring
- ❑ Renew

9 - Coolant pump
- ❑ Removing and installing ⇒ page 201
- ❑ New coolant pump: remove protective cap

10 - Gasket
- ❑ Renew

11 - Centring pin
- ❑ 2x

12 - Toothed belt

- ❑ For coolant pump
- ❑ Removing and installing ⇒ page 203

13 - Toothed belt cover

14 - Bolt

- ❑ 9 Nm

15 - Bolt

- ❑ Left-hand thread
- ❑ Renew
- ❑ 10 Nm + turn 90° further

16 - Toothed belt drive sprocket

- ❑ Note installation position

17 - Oil seal

- ❑ Renewing ⇒ page 86

18 - Balance shaft

19 - Thermostat

- ❑ Removing and installing ⇒ page 202
- ❑ Checking ⇒ page 203

20 - Centring pin

21 - O-ring

- ❑ Renew

22 - Connection

23 - Bolt

- ❑ 9 Nm

Coolant pump - tightening sequence

– Tighten bolts for coolant pump in the sequence -1 ... 5- to 9 Nm.

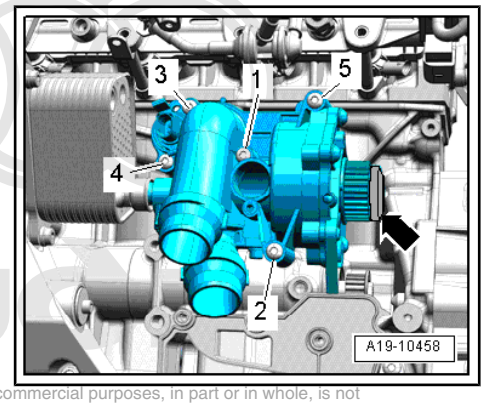

2.2 Exploded view - electric coolant pump

⇒ "2.2.1 Exploded view - electric coolant pump, coolant pump for high-temperature circuit V467 ", page 194

⇒ "2.2.2 Exploded view - electric coolant pump, pump unit", page 195

2.2.1 Exploded view - electric coolant pump, coolant pump for high-temperature circuit - V467-

1 - Coolant pump for high-temperature circuit - V467-

- ❑ Removing and installing ⇒ page 198

2 - Coolant hose

3 - Bolt

- ❑ 2.7 Nm

4 - Bracket

- ❑ For coolant circulation pump - V50-

5 - Bolt

- ❑ 9 Nm

6 - Coolant hose

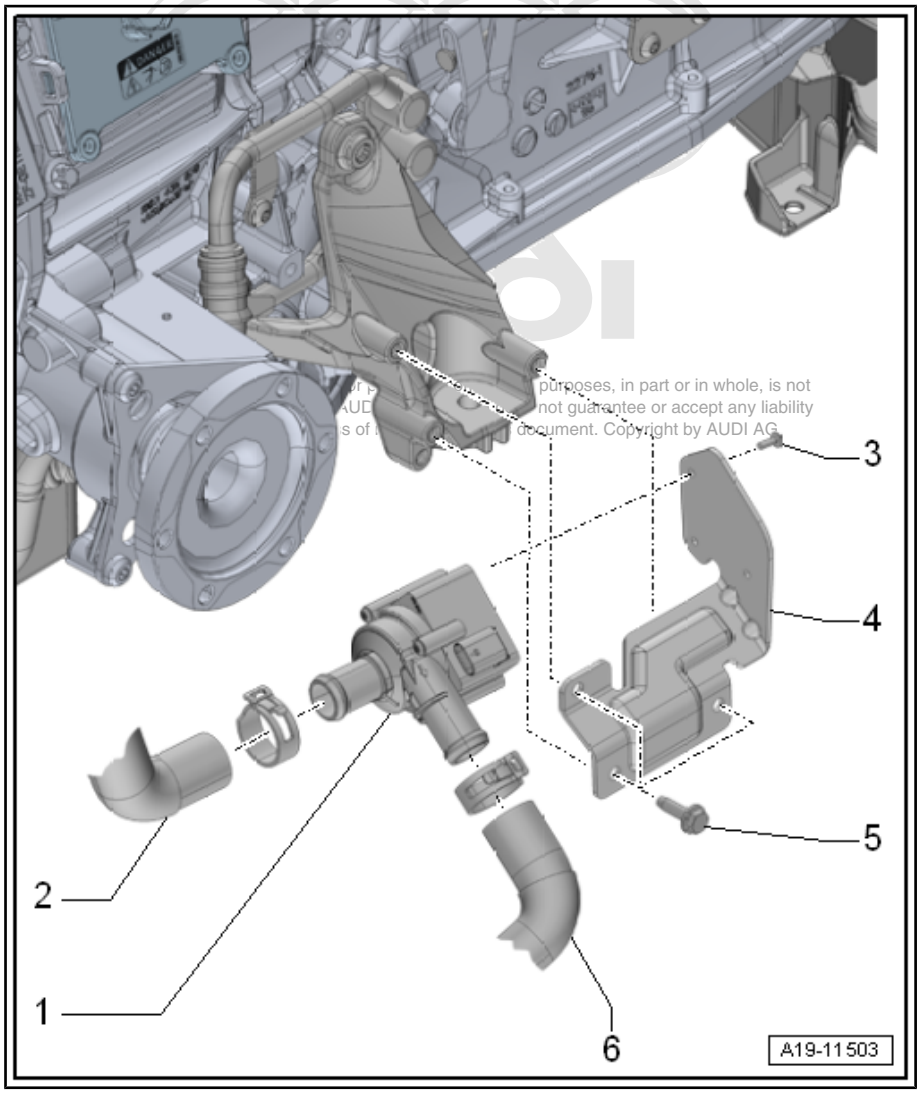

2.2.2 Exploded view - electric coolant pump, pump unit

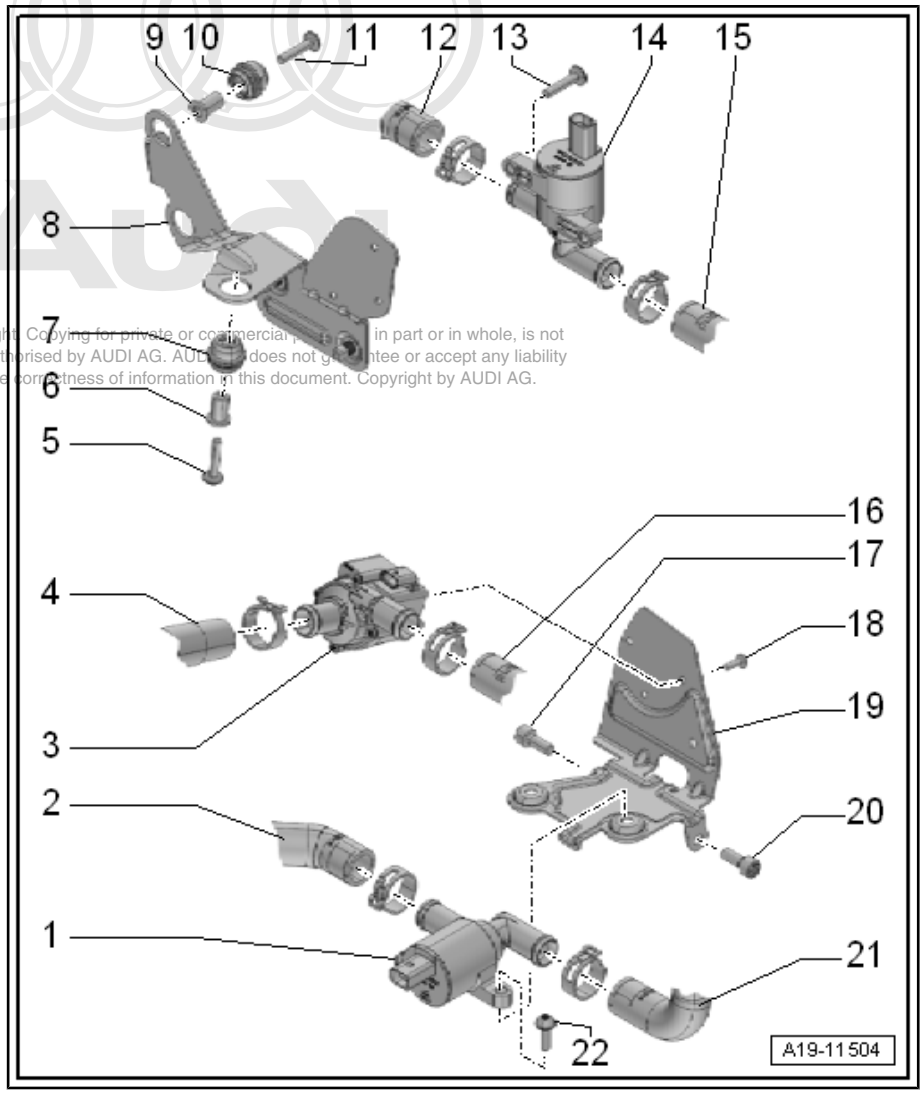

1 - Solenoid for coolant circuit - N492-

- ❑ Removing and installing ⇒ page 211

2 - Coolant hose

3 - Coolant circulation pump - V50-

- ❑ Removing and installing ⇒ page 196

4 - Coolant hose

5 - Bolt

- ❑ 9 Nm

6 - Spacer sleeve

7 - Rubber grommet

8 - Bracket

- ❑ For coolant shut-off valve - N82-

9 - Spacer sleeve

10 - Rubber grommet

11 - Bolt

- ❑ 9 Nm

12 - Coolant hose

13 - Bolt

- ❑ 9 Nm

14 - Coolant shut-off valve - N82-

- ❑ Removing and installing ⇒ page 210

15 - Coolant hose

16 - Coolant hose

17 - Bolt

- ❑ 23 Nm

18 - Bolt

- ❑ 2.7 Nm

19 - Bracket

- ❑ For coolant circulation pump - V50-

20 - Bolt

- ❑ 23 Nm

21 - Coolant hose

22 - Bolt

- ❑ 9 Nm

Coolant pump for low-temperature circuit - V468- - tightening torque

– Tighten bolt -2- to 9 Nm.

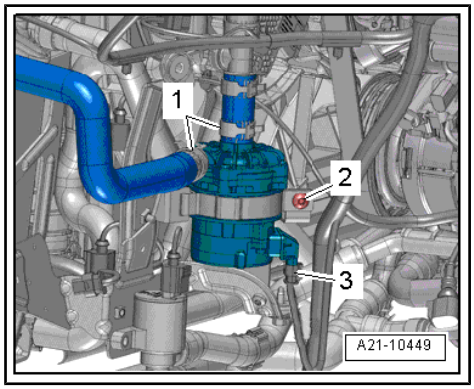

2.3 Removing and installing electrical coolant pump

⇒ "2.3.1 Removing and installing coolant circulation pump V50 ", page 196

⇒ "2.3.2 Removing and installing continued coolant circulation pump V51 ", page 197

⇒ "2.3.3 Removing and installing coolant pump for high-temperature circuit V467 ", page 198

⇒ "2.3.4 Removing and installing coolant pump for low-temperature circuit V468 ", page 199

2.3.1 Removing and installing coolant circulation pump - V50-

Special tools and workshop equipment required

♦ Hose clamps, up to 25 mm - 3094-

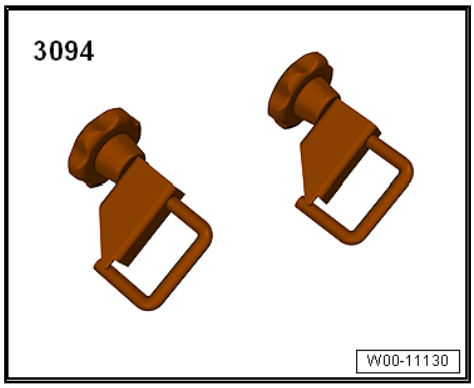

♦ Hose clip pliers - VAS 6362-

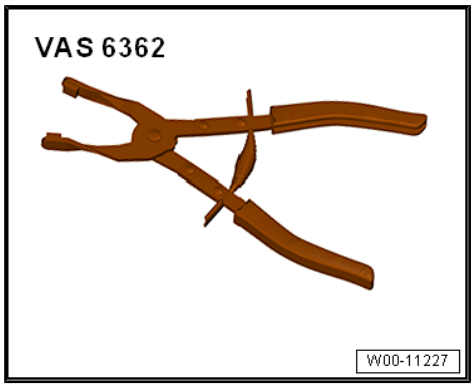

Removing

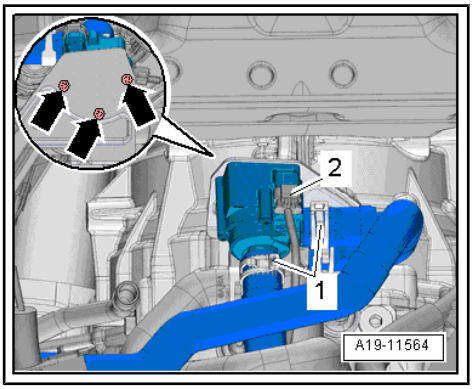

- Remove plenum chamber partition panel ⇒ General body repairs, exterior; Rep. gr. 50 ; Bulkhead; Exploded view - plenum chamber partition panel .
- Unplug electrical connector -2-.
- Remove bolts -arrows-.

Note

Place a cloth underneath to catch escaping coolant.

- Clamp off coolant hoses using hose clamps up to 25 mm - 3094- , release hose clips -1- and disconnect hoses.
- Detach coolant circulation pump - V50- .

Installing

Installation is carried out in the reverse order; note the following:

Note

Secure all hose connections with the correct type of hose clips (same as original equipment) ⇒ Electronic parts catalogue .

- Check coolant level ⇒ page 191 .

Tightening torques

- ⇒ “2.2.2 Exploded view - electric coolant pump, pump unit”, page 195
- ⇒ General body repairs, exterior; Rep. gr. 50 ; Bulkhead; Exploded view - plenum chamber partition panel

2.3.2 Removing and installing continued coolant circulation pump - V51-

Special tools and workshop equipment required

- Hose clamps, up to 25 mm - 3094-

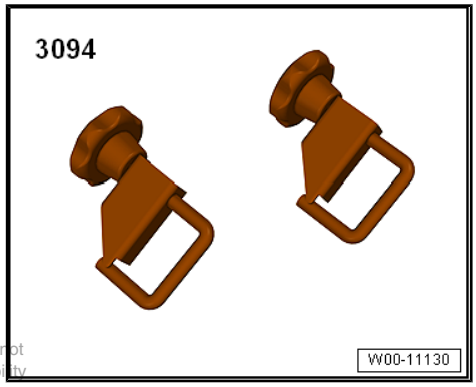

- Hose clip pliers - VAS 6362-

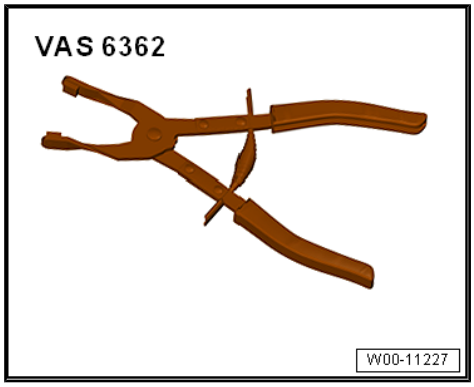

Removing

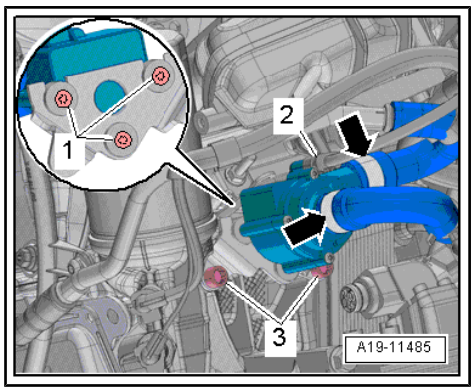

– Remove engine cover panel ⇒ page 54 .
– Unplug electrical connector -2-.
– Remove bolts -3-.
– Clamp off coolant hoses using hose clamps up to 25 mm - 3094- , release hose clips -arrows- and disconnect hoses.
– Remove bolt -1- and detach continued coolant circulation pump - V51- from bracket.

Installing

Installation is carried out in the reverse order; note the following:

Note

Secure all hose connections with the correct type of hose clips (same as original equipment) ⇒ Electronic parts catalogue .

– Install engine cover panel ⇒ page 54 .
– Check coolant level ⇒ page 191 .

Tightening torques

- ⇒ “3.1 Exploded view - coolant pipes”, page 213

2.3.3 Removing and installing coolant pump for high-temperature circuit - V467-

Special tools and workshop equipment required

- Hose clamps, up to 25 mm - 3094-

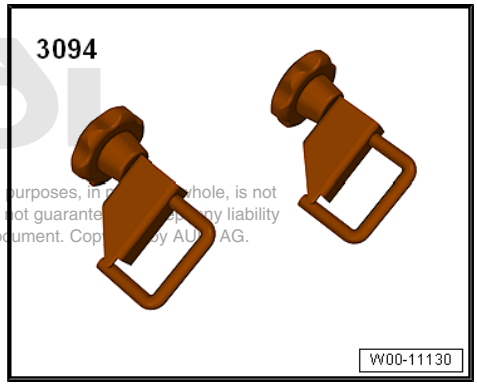

- Hose clip pliers - VAS 6362-

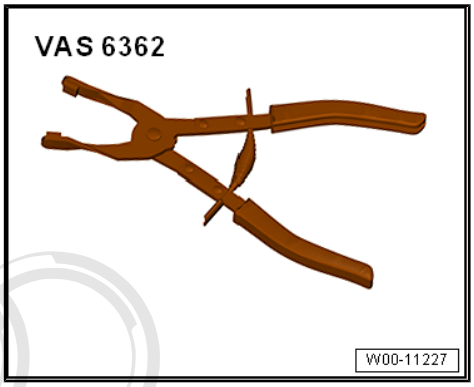

Removing

– Remove noise insulation (rear) ⇒ General body repairs, exterior; Rep. gr. 66 ; Noise insulation; Removing and installing noise insulation .

– Unplug electrical connector -2-.

– Remove bolts -3-.

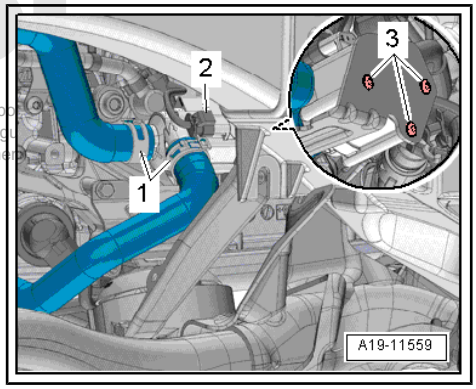

Note

Place a cloth underneath to catch escaping coolant.

– Clamp off coolant hoses using hose clamps up to 25 mm - 3094- , release hose clips -1- and disconnect hoses. Detach coolant pump for high-temperature circuit - V467- .

Installing

Installation is carried out in the reverse order; note the following:

Note

- *Fit new O-rings.*
- *Secure all hose connections with the correct type of hose clips (same as original equipment) ⇒ Electronic parts catalogue .*

– Check coolant level ⇒ page 191 .

Tightening torques

- ⇒ “2.2.1 Exploded view - electric coolant pump, coolant pump for high-temperature circuit V467 ”, page 194
- ⇒ General body repairs, exterior; Rep. gr. 66 ; Noise insulation; Exploded view - noise insulation

2.3.4 Removing and installing coolant pump for low-temperature circuit - V468-

Special tools and workshop equipment required

- Hose clamps, up to 25 mm - 3094-

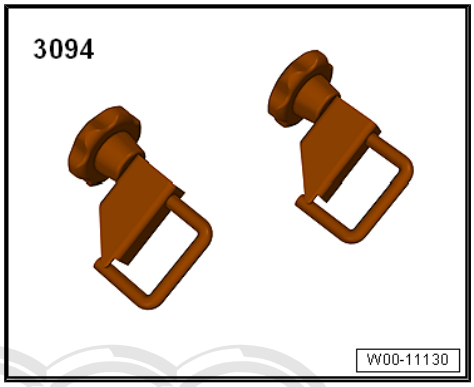

- Hose clip pliers - VAS 6362-

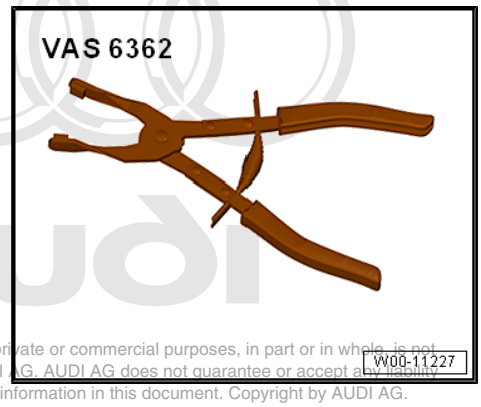

Removing

– Remove front section of front wheel housing liner (left-side) ⇒ General body repairs, exterior; Rep. gr. 66 ; Wheel housing liner; Removing and installing wheel housing liner (front) .

Note

Place a cloth underneath to catch escaping coolant.

– Clamp off coolant hoses using hose clamps up to 25 mm - 3094- , release hose clips -1- and disconnect hoses.

– Unplug electrical connector -3-.

– Unscrew bolt -2-, pivot retaining bracket to front and detach coolant pump for low-temperature circuit - V468- .

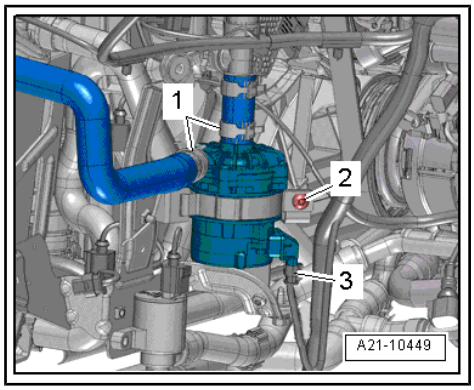

Installing

Installation is carried out in the reverse order; note the following:

Note

Secure all hose connections with the correct type of hose clips (same as original equipment) ⇒ Electronic parts catalogue .

– Check coolant level ⇒ page 191 .

Tightening torques

- ⇒ Fig. “" Coolant pump for low-temperature circuit -V468- - tightening torque"" , page 196
- ⇒ General body repairs, exterior; Rep. gr. 66 ; Wheel housing liner; Exploded view - wheel housing liner (front)

2.4 Removing and installing coolant pump

Removing

– Remove small coolant pipe ⇒ page 214 .

– Remove toothed belt for coolant pump ⇒ page 203 .

– Unplug electrical connector -1- at throttle valve module - J338- .

– Remove bolts -arrows- and detach throttle valve module - J338- .

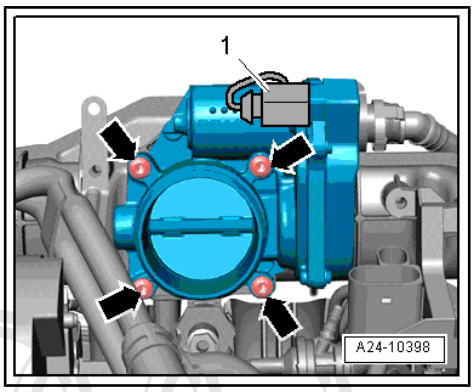

– Lift retaining clips -1, 2- and disconnect coolant hoses.

– Move coolant hoses clear to one side.

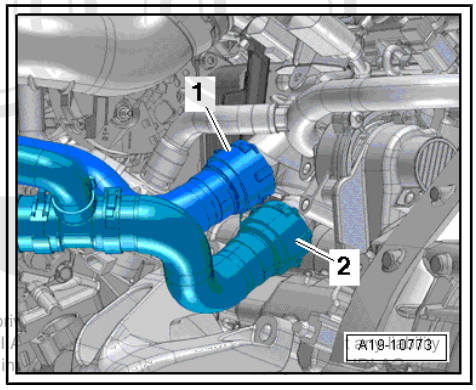

– Unplug electrical connector -1- at coolant temperature sender - G62- .

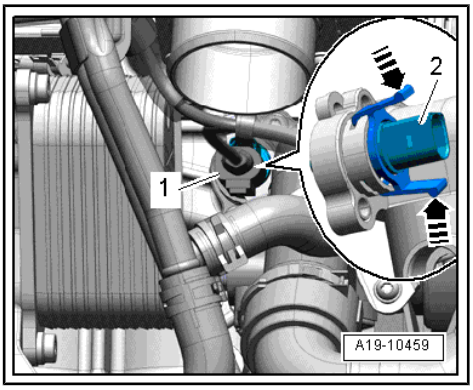

Note

Disregard items marked -2 and arrows-.

– Remove bolts -1 ... 5-.

– Detach coolant pump from centring pins and pull pump off engine oil cooler.

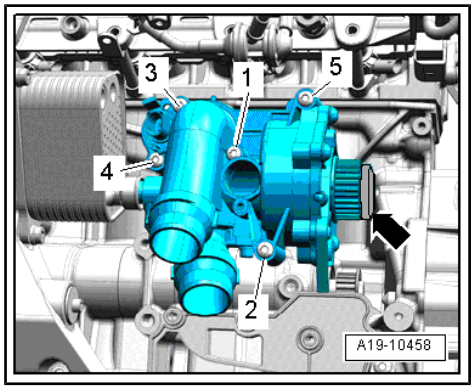

Note

Disregard -arrow-.

Installing

Installation is carried out in the reverse order; note the following:

Note

Renew gaskets and O-rings.

– Lubricate O-rings -4- with coolant, for coolant refer to ⇒ Electronic parts catalogue .

– Check whether the two centring pins are fitted in the cylinder block; install if necessary.

– Fit connecting piece -2- into engine oil cooler -1-.

– Push coolant pump -3- onto connecting piece and centring pins in cylinder block.

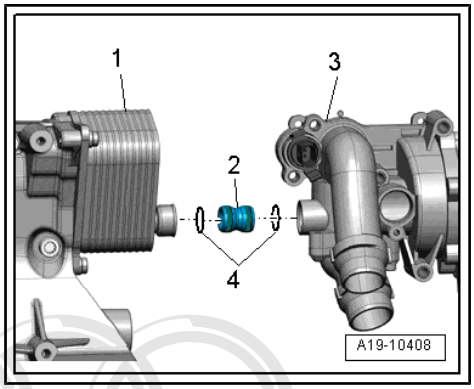

– Tighten coolant pump bolts ⇒ page 193 .

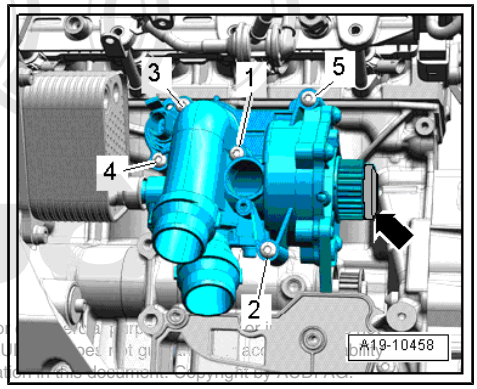

Note

Detach protective cap -arrow- if a new coolant pump has been fitted.

– Install toothed belt for coolant pump ⇒ page 203 .

– Install throttle valve module - J338- ⇒ page 267 .

– Install small coolant pipe ⇒ page 214

Note

Do not reuse coolant.

– Fill up with coolant ⇒ page 186 .

Tightening torques

♦ ⇒ “2.1 Exploded view - coolant pump and thermostat”, page 192

2.5 Removing and installing thermostat

Removing

– Drain coolant ⇒ page 184 .

– Remove coolant pump ⇒ page 201 .

– Unscrew bolts -arrows- and remove connection.

– Detach thermostat.

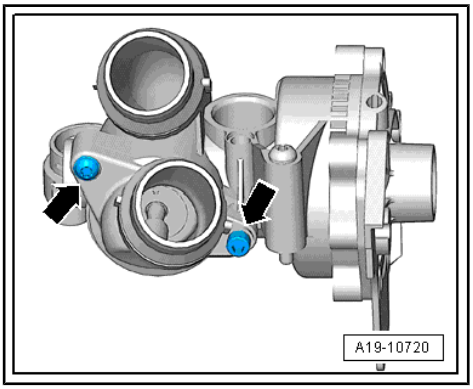

Installing

Installation is carried out in the reverse order; note the following:

Note

Renew gaskets and O-rings.

– Clean sealing surface for O-ring.

– Coat O-ring with coolant, coolant ⇒ Electronic parts catalogue .

– Insert thermostat -4- in coolant pump housing -5- and swivel forwards slightly -arrow-.

– Fit connection -3- carefully (insert centring pin -2- in guide -1-).

– Install support for intake manifold ⇒ page 259 .

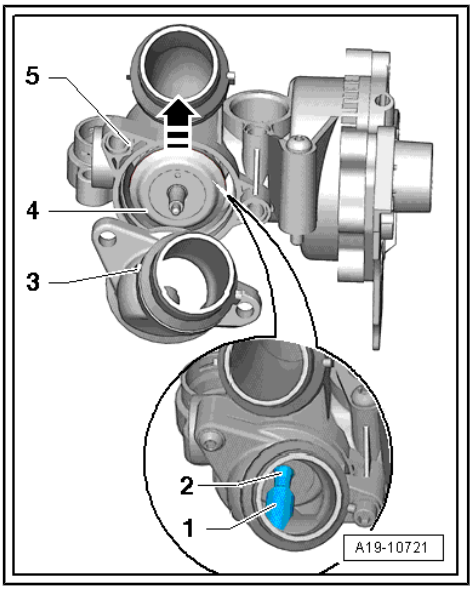

Note

Do not reuse coolant.

– Fill up with coolant ⇒ page 186 .

Tightening torques

♦ ⇒ “2.1 Exploded view - coolant pump and thermostat”, page 192

2.6 Checking thermostat

• Thermostat removed ⇒ page 202

– Heat thermostat in water bath.

Starts to open	Fully open	Opening travel
approx. 95°	approx. 105° 1)	at least 8 mm
• 1) Cannot be tested		

2.7 Removing and installing toothed belt for coolant pump

Special tools and workshop equipment required

♦ Insert tool - T10360-

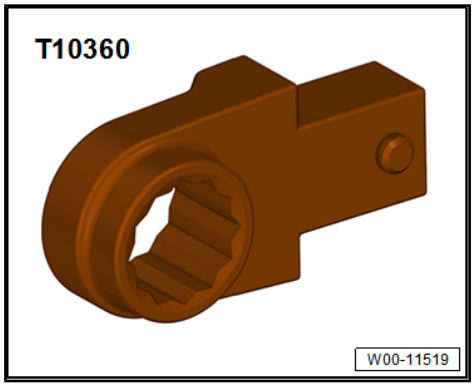

Removing

– Remove small coolant pipe ⇒ page 214 .

– Remove bolts -arrows- and detach toothed belt cover.

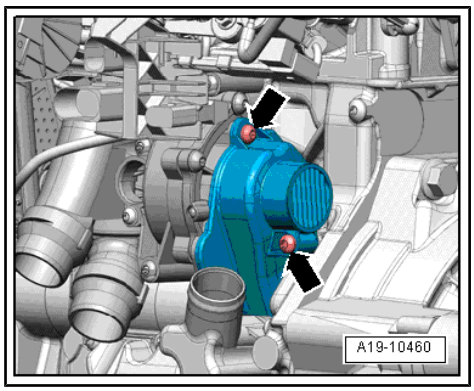

Caution

Risk of damage to thread.

- *The drive sprocket bolt has a left-hand thread.*

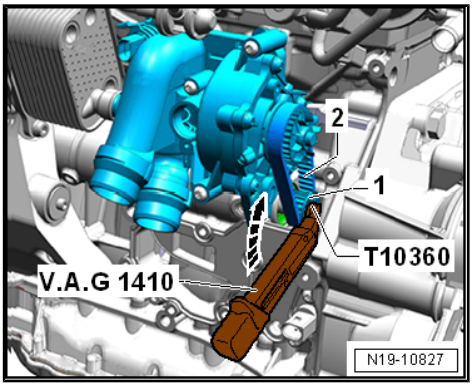

– Use torque wrench - V.A.G 1410- and insert tool - T10360- to loosen bolt on coolant pump drive sprocket -1- in a clockwise direction (direction of -arrow-) and unscrew three turns (counterhold at vibration damper).

– Remove toothed belt -2-.

Installing

Installation is carried out in the reverse order; note the following:

Note

- *Renew drive sprocket bolt.*
- *Renew gaskets and O-rings.*
- *Note installation position of toothed belt sprocket ⇒ Item 16 (page 193) .*

– Install small coolant pipe ⇒ page 214 .

Note

Do not reuse coolant.

– Fill up with coolant ⇒ page 186 .

Tightening torques

- ⇒ "2.1 Exploded view - coolant pump and thermostat", page 192

2.8 Removing and installing coolant temperature sender - G62-

Removing

- Engine cold.

– Open filler cap on coolant expansion tank briefly and allow residual pressure in cooling system to dissipate.

Note

For all work on vehicles with high-voltage system, note additional warnings for working on such vehicles ⇒ page 2 and ⇒ Electrical system, hybrid; Rep. gr. 93 ; General warning instructions for work on the high-voltage system .

WARNING

Safety hazard: the engine can start unexpectedly.

Before carrying out general work on a vehicle with high-voltage electrical system, switch off the ignition and remove the ignition key from the vehicle.

WARNING

Working on vehicles with high-voltage wiring:

- *Do not support yourself or tools on high-voltage wiring or associated components --> this can damage the insulation.*
- *High-voltage wiring must not be excessively bent or kinked --> this can damage the insulation.*
- *The round high-voltage connectors are colour-coded with an external coloured ring and are provided with mechanical coding or guide lugs. It is important to observe this coding when joining up the round high-voltage connectors, otherwise the connectors can be damaged.*

DANGER!

High voltage can cause fatal injury.

Danger of severe or fatal injuries from electric shock.

- *The high-voltage system may only be de-energised by a suitably qualified person (Audi high-voltage technician).*
- *It must be definitely confirmed that the high-voltage system is de-energised. The system may only be de-energised using the vehicle diagnostic tester via "Guided Fault Finding".*
- *The qualified person (Audi high-voltage technician) confirms that the system is de-energised and uses the locking cap - T40262- to ensure that the system cannot be re-energised. The ignition key and the maintenance connector for high-voltage system - TW - are then stored in a safe place by the qualified person.*
- *The qualified person (Audi high-voltage technician) marks the vehicle by attaching the appropriate warning signs.*

Note

- *De-energising high-voltage system:*
- *Connect vehicle diagnostic tester*
- *Select* `Guided Fault Finding` *mode*
- *Using the* `Go To` *button, select the following menu options in succession:*
- `Selecting function/component`
- `Body`
- `Electrical system`
- `Self-diagnosis compatible systems`
- `8C - Hybrid battery management -J840`
- `8C - Hybrid battery management, functions`
- `51 - De-energise high-voltage system (Rep. gr. 93)`

– Remove electrical air conditioner compressor -V470- from bracket for ancillaries and tie up to left side ⇒ Heating, air conditioning; Rep. gr. 87 ; Air conditioner compressor; Detaching and attaching air conditioner compressor at bracket .

WARNING

Risk of injury caused by refrigerant.

- *The air conditioner refrigerant circuit must not be opened.*

Caution

Danger of damage to refrigerant lines and hoses.

- *Do NOT stretch, kink or bend refrigerant lines and hoses.*

– Unplug electrical connector -1- at throttle valve module -J338- .

– Remove bolts -arrows- and detach throttle valve module -J338- .

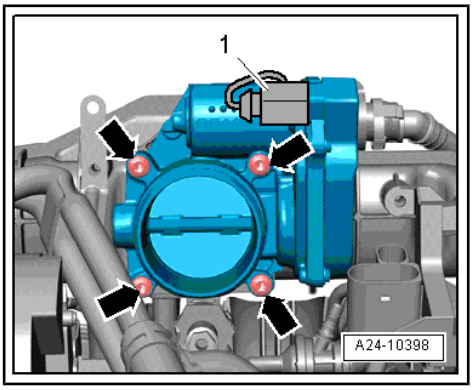

– Remove support for intake manifold (remove nut -2- and bolt -1-).

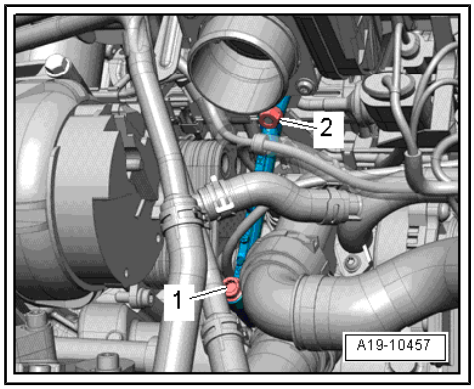

Note

Depending on version, different coolant temperature senders - G62- can be fitted.

– Unplug electrical connector -1- at coolant temperature sender - G62- .

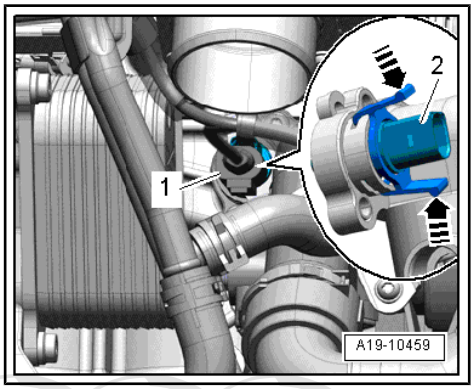

Note

Place a cloth underneath to catch escaping coolant.

– Detach retaining clip (press release tabs -arrows-).

– Detach coolant temperature sender - G62- -2-

Installing

Installation is carried out in the reverse order; note the following:

Note

- *Fit new O-rings.*
- *Insert new coolant temperature sender - G62- immediately into connection to avoid loss of coolant.*
- *Hose connections and air pipes and hoses must be free of oil and grease before assembly.*
- *Secure all hose connections with the correct type of hose clips (same as original equipment) ⇒ Electronic parts catalogue .*
- *To ensure that the air hoses can be properly secured at their connections, spray rust remover onto the worm thread or used hose clips before installing.*

– Install support for intake manifold ⇒ page 259 .

– Install throttle valve module - J338- ⇒ page 267 .

– Install electrical air conditioner compressor -V470- ⇒ Heating, air conditioning; Rep. gr. 87 ; Air conditioner compressor; Detaching and attaching air conditioner compressor at bracket .

Re-energising the high-voltage system

DANGER!

High voltage can cause fatal injury.

Danger of severe or fatal injuries from electric shock.

- ***The high-voltage system may only be re-energised by a suitably qualified person (Audi high-voltage technician).***
- ***The system may only be re-energised using the vehicle diagnostic tester via "Guided Fault Finding".***
- ***The vehicle is then made ready for operation again by the qualified person (Audi high-voltage technician).***
- ***The qualified person (Audi high-voltage technician) marks the vehicle by attaching the appropriate warning signs.***

Note

- *Re-energising high-voltage system:*
- *Connect vehicle diagnostic tester*
- *Select* `Guided Fault Finding` *mode*
- *Using the* `Go To` *button, select the following menu options in succession:*
- `Selecting function/component`
- `Body`
- `Electrical system`
- `Self-diagnosis compatible systems`
- `8C - Hybrid battery management -J840`
- `8C - Hybrid battery management, functions`
- `51 - Re-energise high-voltage system (Rep. gr. 93)`

– Check coolant level ⇒ page 186 .

Tightening torques

- ⇒ "2.1 Exploded view - coolant pump and thermostat", page 192

2.9 Removing and installing coolant valves

⇒ "2.9.1 Removing and installing coolant shut-off valve N82 ", page 210

⇒ "2.9.2 Removing and installing solenoid valve for coolant circuit N492 ", page 211

2.9.1 Removing and installing coolant shut-off valve - N82-

Special tools and workshop equipment required

- Hose clamps, up to 25 mm - 3094-

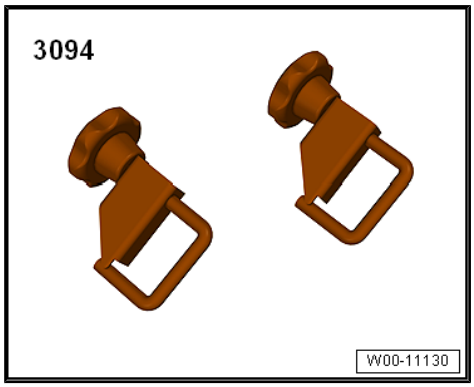

- Hose clip pliers - VAS 6362-

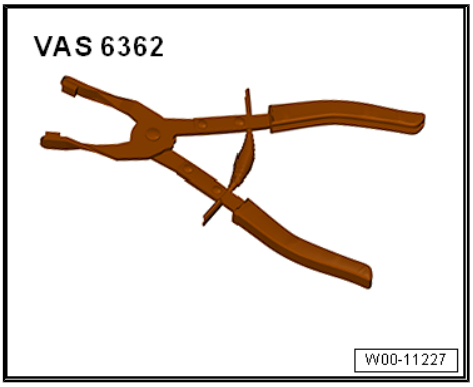

Removing

– Remove fresh air intake ⇒ Heating, air conditioning; Rep. gr. 87 ; Air routing; Removing and installing fresh air intake .

– Unplug electrical connector -1-.

– Remove bolts -2-.

– Clamp off coolant hoses using hose clamps up to 25 mm - 3094- , release hose clips -arrows- and disconnect hoses.

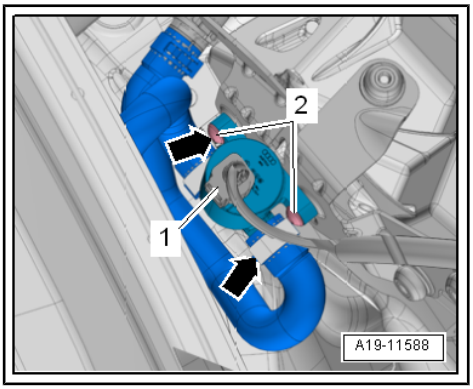

Installing

Installation is carried out in the reverse order; note the following:

Note

Secure all hose connections with the correct type of hose clips (same as original equipment) ⇒ Electronic parts catalogue .

– Install fresh air intake ⇒ Heating, air conditioning; Rep. gr. 87 ; Air routing; Removing and installing fresh air intake .

– Check coolant level ⇒ page 191 .

Tightening torques

- ⇒ “2.2.2 Exploded view - electric coolant pump, pump unit”, page 195

2.9.2 Removing and installing solenoid valve for coolant circuit - N492-

Special tools and workshop equipment required

- Hose clamps, up to 25 mm - 3094-

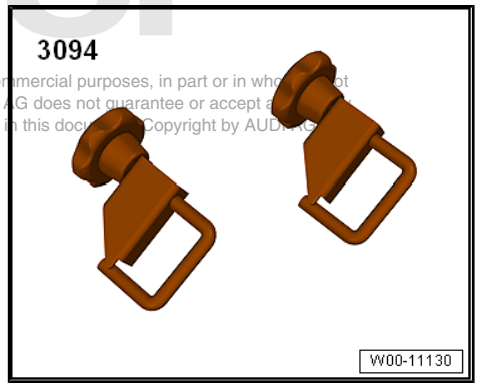

- Hose clip pliers - VAS 6362-

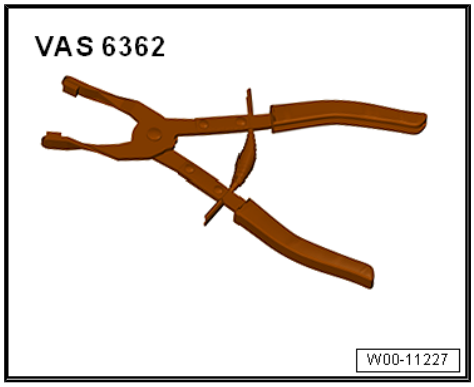

Removing

– Clamp off coolant hoses using hose clamps up to 25 mm - 3094- , release hose clips -2- and disconnect hoses.

– Remove bolts -arrows- and unplug electrical connector -1-.

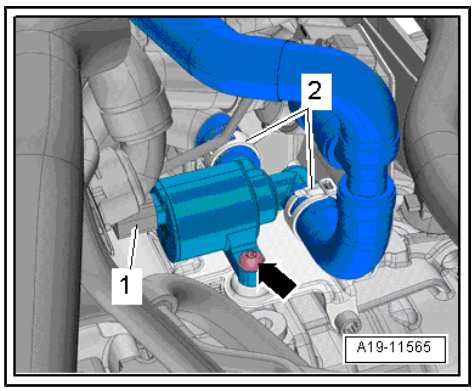

Installing

Note

Secure all hose connections with the correct type of hose clips (same as original equipment) ⇒ Electronic parts catalogue .

– Install coolant pump for high-temperature circuit - V467- ⇒ page 196 .

– Check coolant level ⇒ page 191 .

Tightening torques

- ⇒ “2.2.2 Exploded view - electric coolant pump, pump unit”, page 195

3 Coolant pipes

⇒ "3.1 Exploded view - coolant pipes", page 213

⇒ "3.2 Removing and installing coolant pipes", page 214

3.1 Exploded view - coolant pipes

Note

The arrow markings on coolant pipes and on ends of hoses must align.

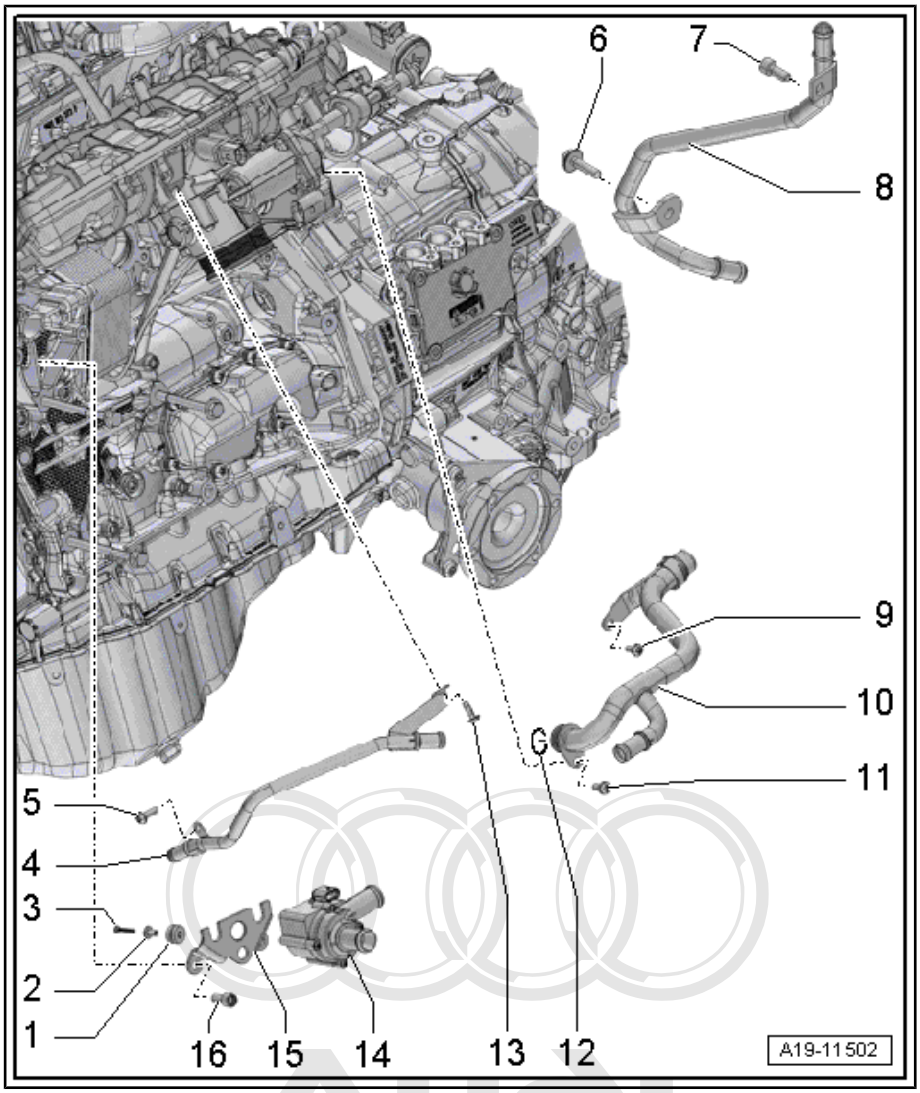

1 - Rubber grommet

2 - Spacer sleeve

3 - Bolt
- ❑ 2.7 Nm

4 - Bolt
- ❑ 9 Nm

5 - Bolt
- ❑ 9 Nm

6 - Coolant pipe (left-side) on gearbox
- ❑ Removing and installing ⇒ page 215

7 - Bolt
- ❑ 23 Nm

8 - Bolt
- ❑ 9 Nm

9 - Small coolant pipe
- ❑ Removing and installing ⇒ page 214

10 - Bolt
- ❑ 9 Nm

11 - O-ring
- ❑ Renew

12 - Bolt
- ❑ 9 Nm

13 - Continued coolant circulation pump - V51-
- ❑ Removing and installing ⇒ page 197

14 - Bracket
- ❑ For continued coolant circulation pump - V51-

15 - Bolt
- ❑ 23 Nm

3.2 Removing and installing coolant pipes

⇒ "3.2.1 Removing and installing small coolant pipe", page 214

⇒ "3.2.2 Removing and installing coolant pipe (right-side) on gearbox", page 215

3.2.1 Removing and installing small coolant pipe

Special tools and workshop equipment required

- Hose clip pliers - VAS 6340-

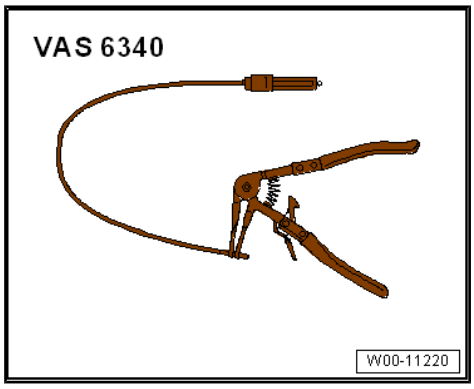

Removing

– Remove engine cover panel ⇒ page 54 .

– Drain coolant ⇒ page 184 .

– Release hose clips -arrows- and take out air hose -1-.

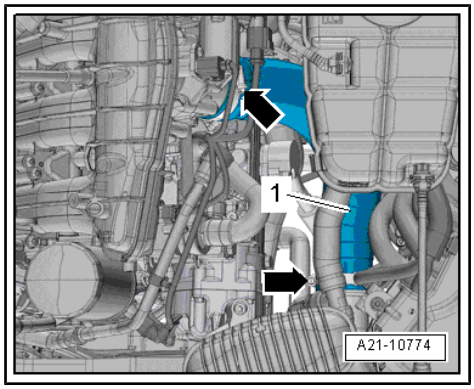

– Unplug electrical connector -2-.

– Lift retaining clips -1, 4- and disconnect coolant hoses.

– Remove bolt -3- and place coolant expansion tank to one side.

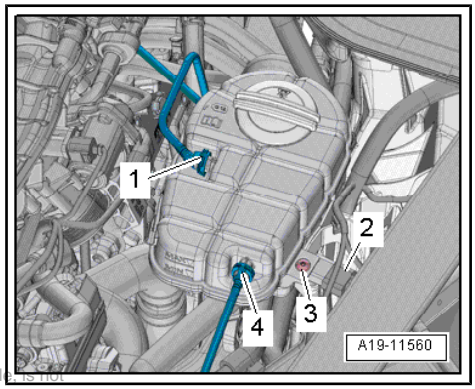

– Remove bolts -arrows-.
– Detach electrical connectors -1, 2, 3- from bracket.

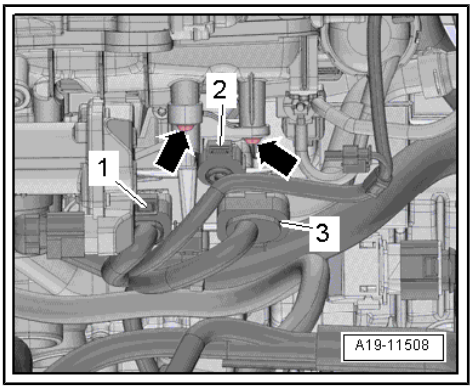

– Release hose clip -1-, lift retaining clip -2- and detach coolant hoses.
– Unscrew bolts -arrows- and detach small coolant pipe.

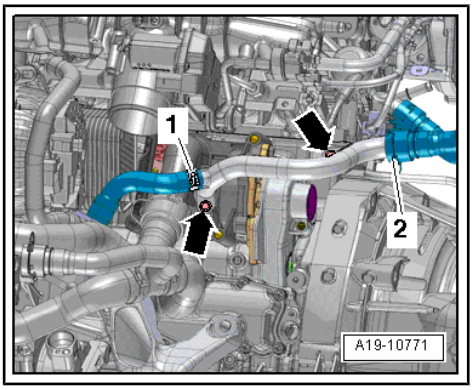

Installing

Installation is carried out in the reverse order; note the following:

Note

- *Fit new O-rings.*
- *Hose connections and air pipes and hoses must be free of oil and grease before assembly.*
- *Secure all hose connections with the correct type of hose clips (same as original equipment) ⇒ Electronic parts catalogue .*
- *To ensure that the air hoses can be properly secured at their connections, spray rust remover onto the worm thread of used hose clips before installing.*

– Install air hoses with screw-type clips ⇒ page 240 .

Note

Do not reuse coolant.

– Connect coolant hoses with plug-in connector ⇒ page 218 .
– Fill up with coolant ⇒ page 186 .

Tightening torques

- ⇒ “3.1 Exploded view - coolant pipes”, page 213

3.2.2 Removing and installing coolant pipe (right-side) on gearbox

Special tools and workshop equipment required

- Hose clamps, up to 25 mm - 3094-

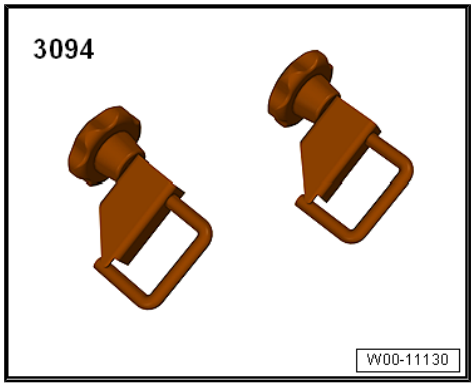

- Hose clip pliers - VAS 6362-

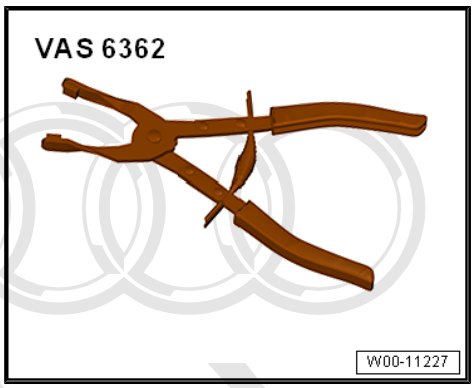

Removing

– Remove front silencers ⇒ page 296 .

Note

Place a cloth under coolant pipe to catch escaping coolant.

– Clamp off coolant hoses using hose clamps up to 25 mm - 3094- , release hose clips -arrows- and disconnect hoses.

– Remove bolts -1 and 2- and detach coolant pipe from gearbox (left-side).

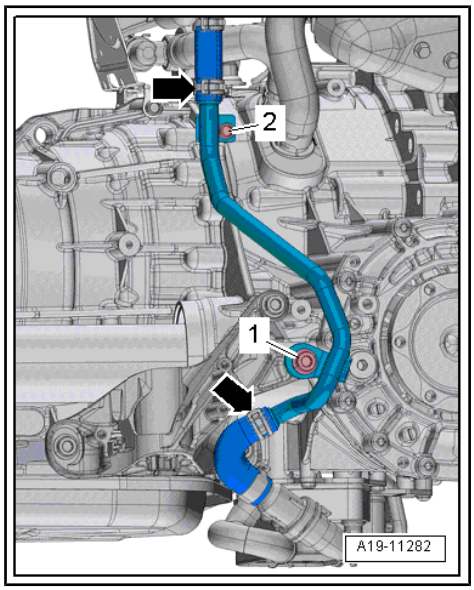

Installing

Installation is carried out in the reverse order; note the following:

Note

- *Fit new O-rings.*
- *Secure all hose connections with the correct type of hose clips (same as original equipment) ⇒ Electronic parts catalogue .*

– Check coolant level ⇒ page 191 .

Tightening torques

- ⇒ “3.1 Exploded view - coolant pipes”, page 213
- ⇒ “1.1 Exploded view - silencers”, page 293

4 Radiators/radiator fans

4.1 Exploded view - radiators/radiator fans

4.1.1 Exploded view - radiators/radiator fans (radiators)

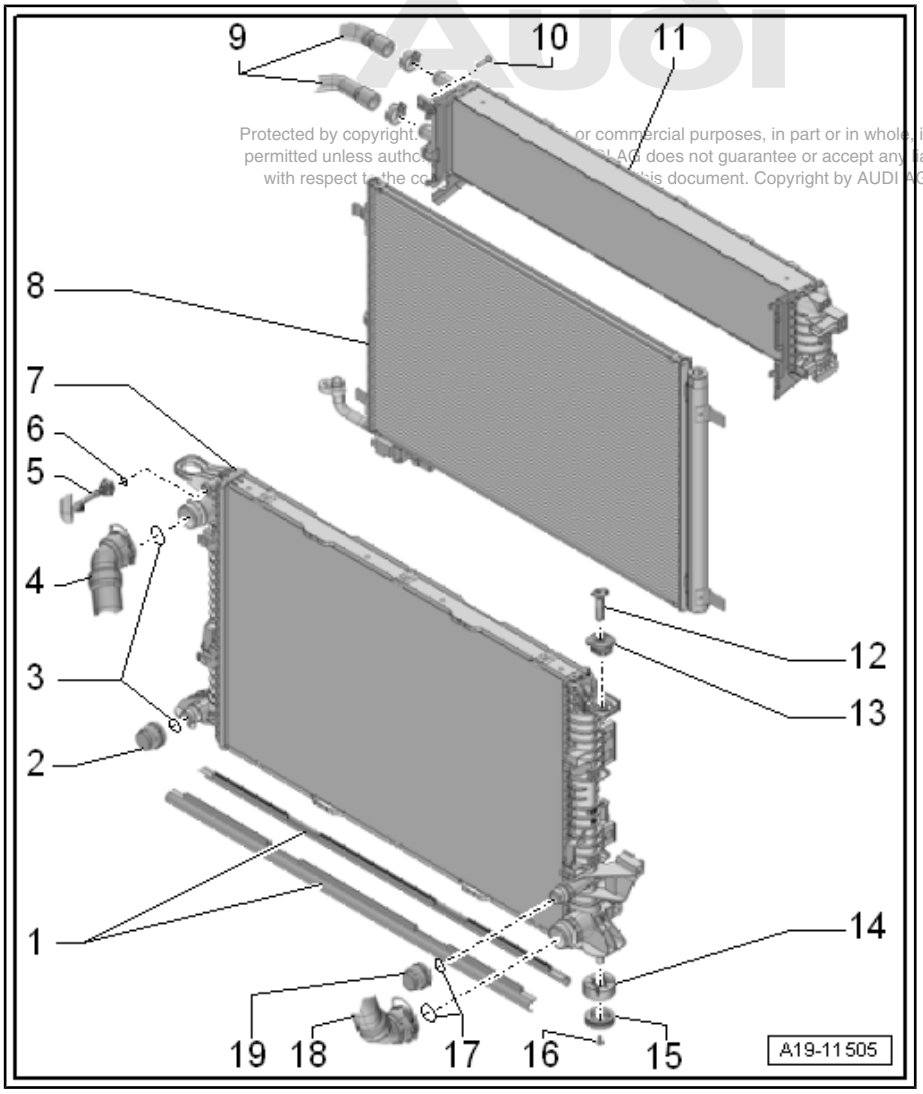

1 - Air ducts

2 - Connection
- ❑ Lift retaining clip to detach
- ❑ Connecting ⇒ page 218

3 - O-rings
- ❑ Renew

4 - Coolant hose
- ❑ Lift retaining clip to detach
- ❑ Connecting ⇒ page 218

5 - Coolant hose
- ❑ To coolant expansion tank
- ❑ Press release ring to detach
- ❑ Connecting ⇒ page 218

6 - O-ring
- ❑ Renew

7 - Radiator
- ❑ Removing and installing ⇒ page 219

8 - Condenser
- ❑ Removing and installing ⇒ Heating, air conditioning; Rep. gr. 87 ; Refrigerant circuit; Removing and installing condenser

9 - Coolant hoses
- ❑ Lift retaining clip to detach
- ❑ Connecting ⇒ page 218

10 - Bolt

- ❑ 3.5 Nm

11 - Radiator for coolant circuit for power and control electronics for electric drive

- ❑ Removing and installing ⇒ page 227

12 - Rubber buffer

13 - Retaining pin

- ❑ Use screwdriver to release and pull off

14 - Rubber bush

- ❑ For radiator

15 - Washer

16 - Bolt

- ❑ 3.5 Nm

17 - O-rings

- ❑ Renew

18 - Coolant hose

- ❑ Lift retaining clip to detach
- ❑ Connecting ⇒ page 218

19 - Connection

- ❑ Lift retaining clip to detach
- ❑ Connecting ⇒ page 218

Connecting coolant hose with plug-in connector

– Remove old O-ring -2- from coolant hose -3-.

– Lightly lubricate new O-ring with coolant and fit O-ring in coolant hose.

– Press coolant hose onto connection -1- until it engages audibly.

– Press coolant hose in again and then pull to check that plug-in connector is correctly engaged.

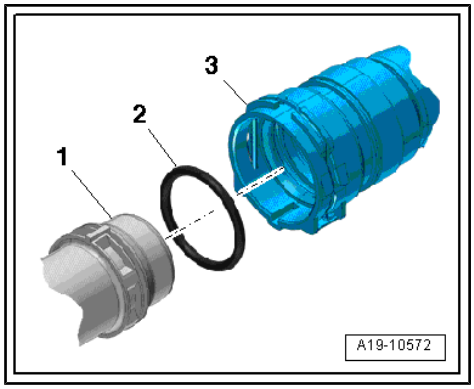

4.1.2 Exploded view - radiators/radiator fans (radiator cowl and radiator fan)

1 - Radiator fan 2 - V177-
- ❑ With radiator fan control unit 2 - J671-
- ❑ Removing and installing ⇒ page 226

2 - Radiator fan - V7-
- ❑ With radiator fan control unit - J293-
- ❑ Removing and installing ⇒ page 226

3 - Radiator cowl
- ❑ Removing and installing ⇒ page 224

4 - Bolt
- ❑ 3.5 Nm

5 - Air duct (left-side)

6 - Fan wheel
- ❑ Pin must engage in hole

7 - Bolt
- ❑ 5 Nm

8 - Fan wheel
- ❑ Pin must engage in hole

9 - Bolt
- ❑ 5 Nm

10 - Air duct (right-side)

11 - Bolt
- ❑ 3.5 Nm

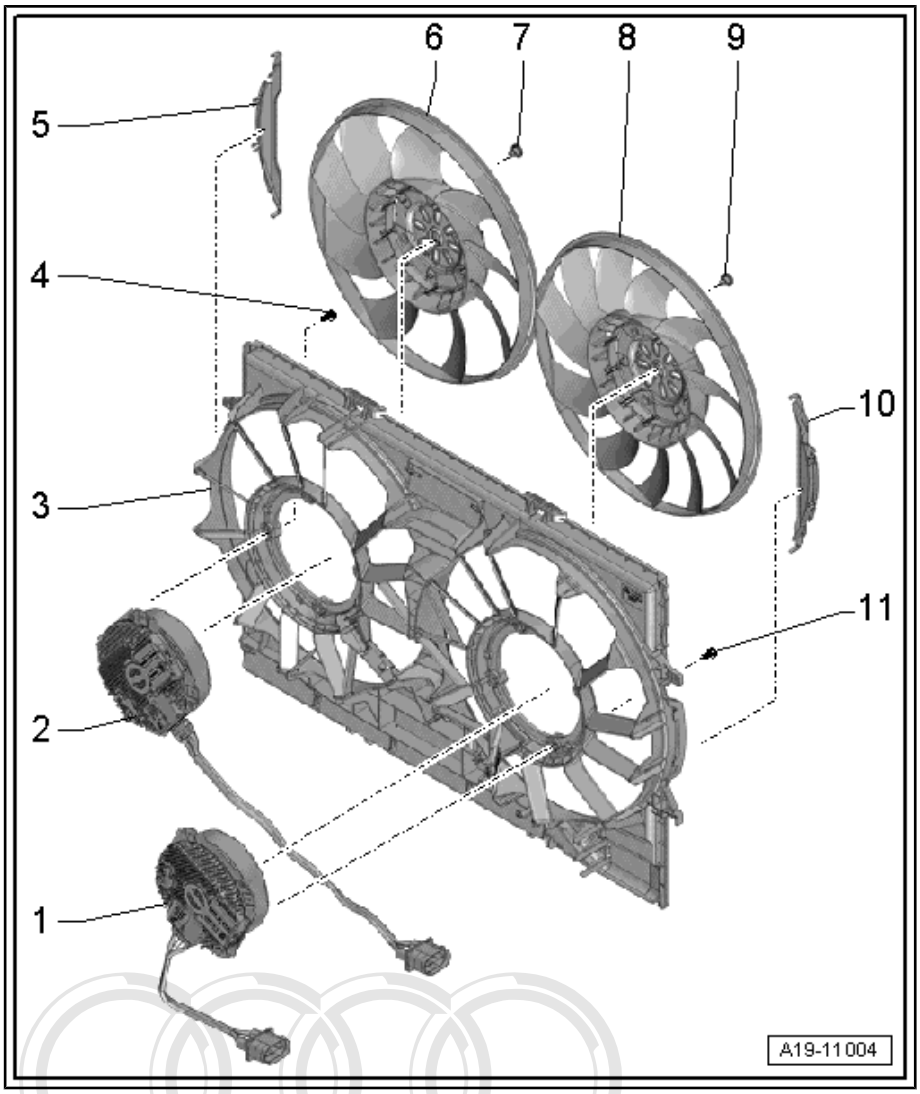

4.2 Removing and installing radiator

Special tools and workshop equipment required

- ♦ Drip tray for workshop hoist - VAS 6208-

- Hose clip pliers - VAS 6362-

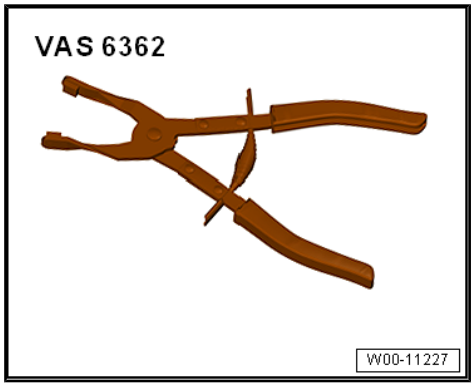

Removing

– Remove impact absorber (front) ⇒ General body repairs, exterior; Rep. gr. 63 ; Bumper (front); Removing and installing impact absorber .

– Lift retaining clip -arrow- and detach connection (bottom right) from radiator.

– Drain off coolant.

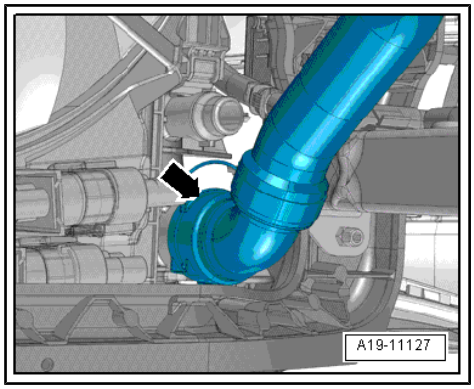

> ⚠ **WARNING**
>
> *Risk of injury as the radiator fans may start up automatically.*
>
> - *Unplug electrical connectors before starting to work in the area of radiator cowl.*

– Unplug electrical connectors -1, 2- for radiator fan.

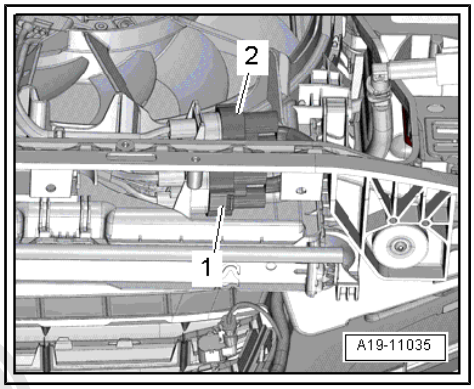

– Pull off retaining clip -3- and disconnect headlight washer hose -4-.

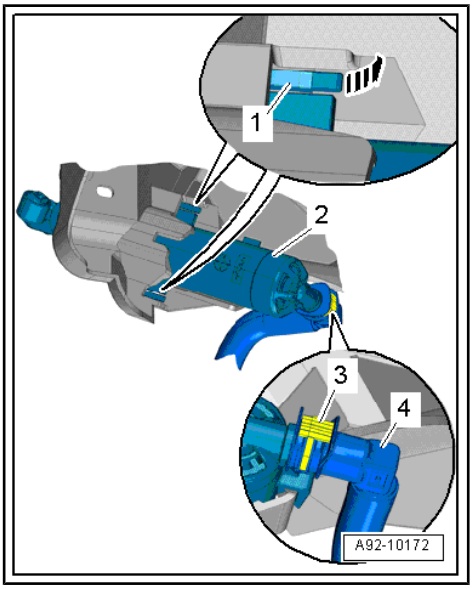

Note

Disregard -items 1, 2- and -arrow-.

– Remove bolt -arrow-, leave bracket with horns suspended.

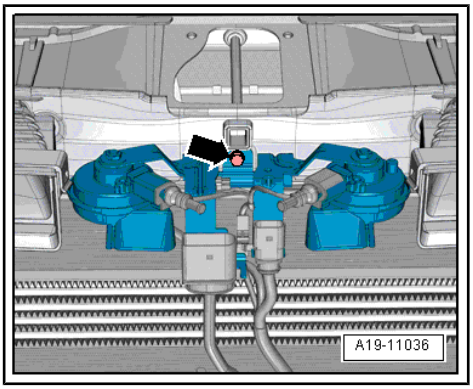

– Unscrew bolts -arrows- for air duct at lock carrier.

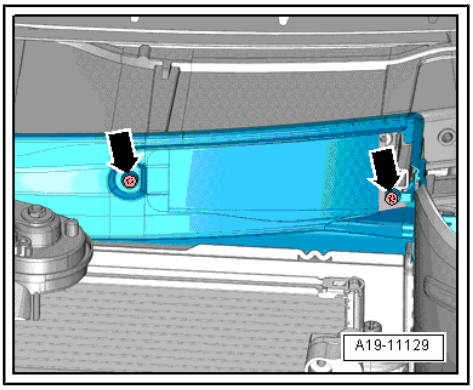

– Unclip cover -1- (right-side) -arrows- and remove.

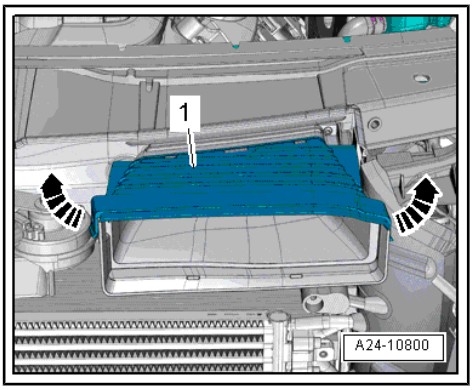

– Remove bolts -arrows- (right-side) and detach air ducts -1 and 2-.

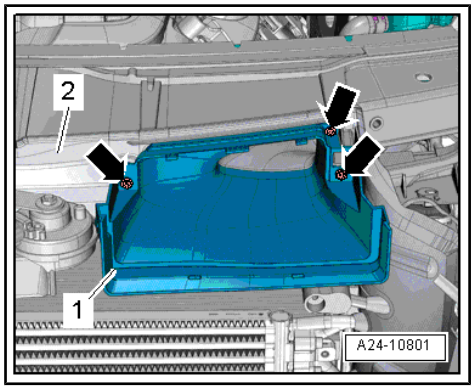

– Unclip air ducts -1 and 2-.

– Remove radiator for coolant circuit for power and control electronics for electric drive ⇒ page 227 .

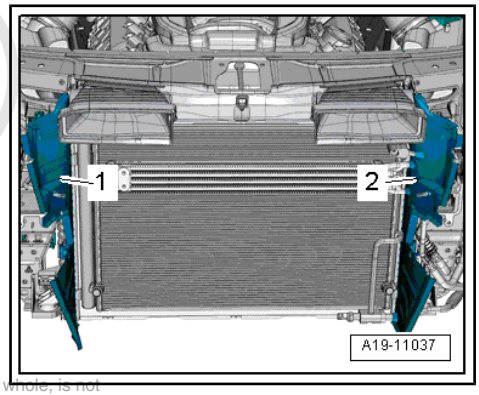

– Remove bolt -arrow- on refrigerant line.

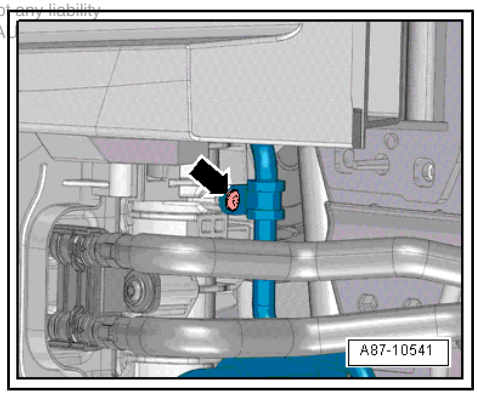

– Move clear electrical connector -2-.

– Remove retaining bracket (both sides) -1- for bonnet lock ⇒ General body repairs, exterior; Rep. gr. 55 ; Bonnet; Exploded view - bonnet .

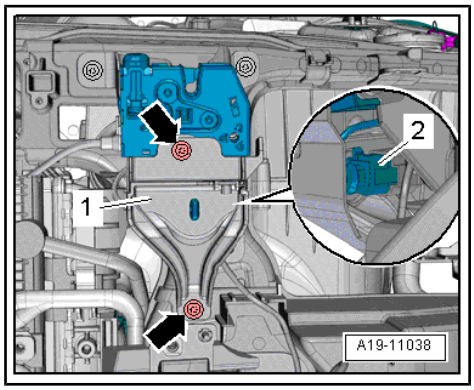

– Remove bolt -arrow- at bottom left and bottom right of radiator.

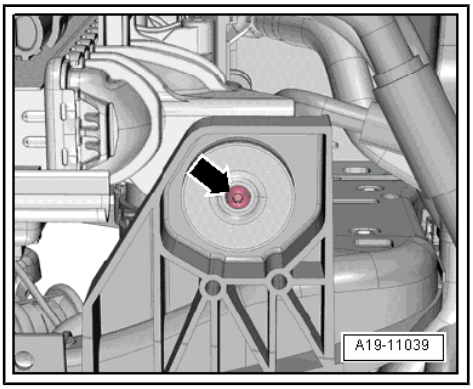

– Release retaining pins -1- for radiator on both sides -arrow- and pull out upwards.

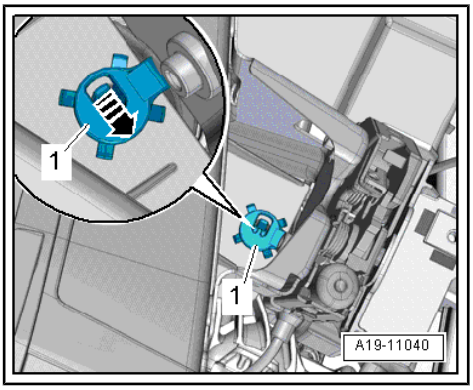

– Have a second mechanic release retaining clips -1- on both sides in direction of -arrow A-.

– Pull condenser -2- upwards out of its mountings on radiator -arrows B-.

> ⚠ **Caution**
>
> ***Risk of damage to condenser, refrigerant lines and refrigerant hoses.***
>
> ♦ ***Do NOT stretch, kink or bend refrigerant lines and hoses.***

– Pivot condenser forwards with pipes/hoses attached.

– Pull off water radiator (front) for charge air cooling circuit towards left side of vehicle and remove.

– Take off radiator.

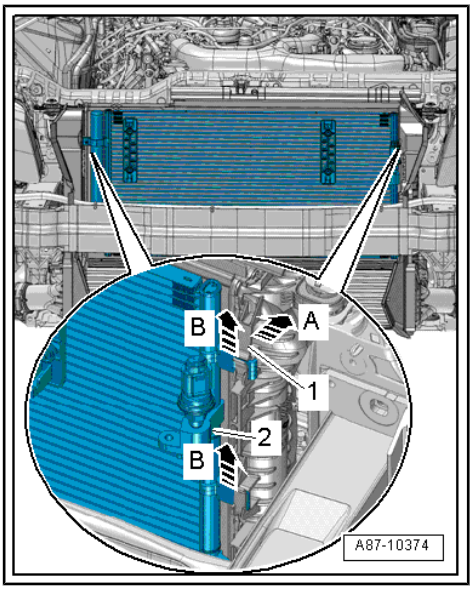

– Press locking tabs on left and right sides of radiator cowl -arrow- and at the same time lift radiator cowl off radiator.

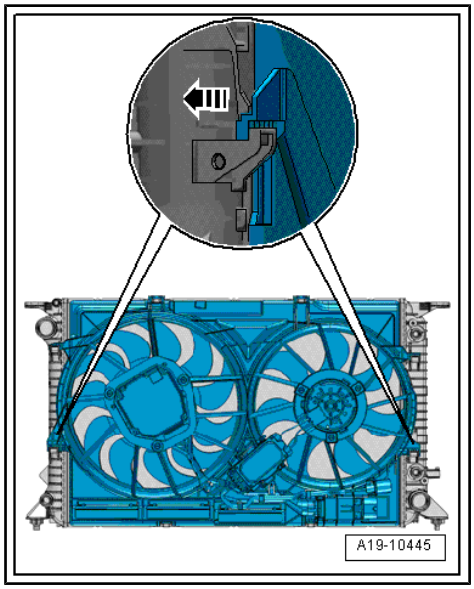

Installing

Installation is carried out in the reverse order; note the following:

Note

- *If there are slight impressions on the fins, refer to ⇒ page 14 .*
- *Secure all hose connections with the correct type of hose clips (same as original equipment) ⇒ Electronic parts catalogue .*
- *Do not reuse coolant.*

– Connect coolant hoses with plug-in connector ⇒ page 218 .

– Fill up with coolant ⇒ page 184 .

Tightening torques

- ⇒ "4.1.1 Exploded view - radiators/radiator fans (radiators)", page 217
- ⇒ "3.1 Exploded view - air cleaner housing", page 256
- Retaining brackets for bonnet lock ⇒ General body repairs, exterior; Rep. gr. 55 ; Bonnet; Exploded view - bonnet
- Refrigerant line ⇒ Heating, air conditioning; Rep. gr. 87 ; Refrigerant circuit; Exploded view - condenser
- Bracket for horns ⇒ Electrical system; Rep. gr. 90 ; Horn; Exploded view - horn
- ⇒ General body repairs, exterior; Rep. gr. 63 ; Bumper (front); Exploded view - impact bar .

4.3 Removing and installing radiator cowl

Removing

– Drain coolant ⇒ page 184 .

– Remove closure plate for bumper cover (front) ⇒ General body repairs, exterior; Rep. gr. 63 ; Bumper (front); Removing and installing attachments .

WARNING

Risk of injury as the radiator fans may start up automatically.

- *Unplug electrical connectors before starting to work in the area of radiator cowl.*

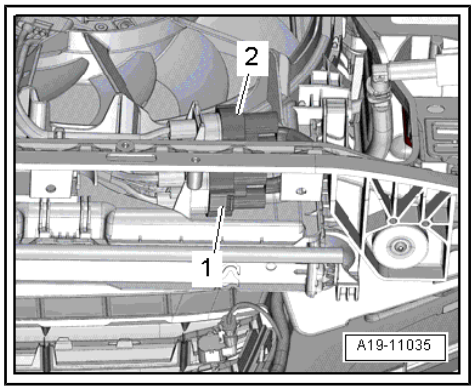

– Unplug electrical connectors -1, 2- for radiator fan.

– Remove air cleaner housing ⇒ page 257 .

– Remove bolts -arrows- and detach air duct -1-.

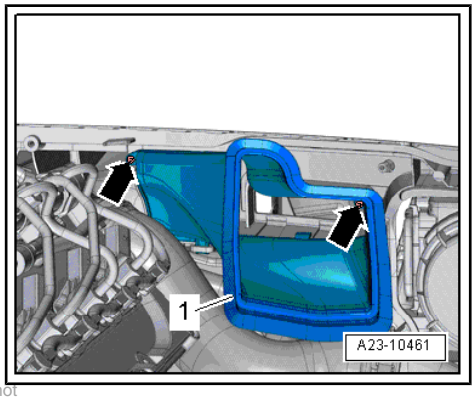

– Unplug electrical connector -1- at charge pressure sender - G31- .
– Move coolant hose clear.
– Release hose clips -arrows- and detach air hoses.
– Unscrew bolts -2- and detach air pipe.

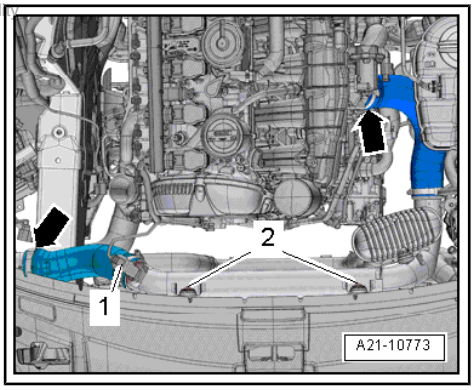

– Unscrew bolts -arrows- and detach bracket -1-.

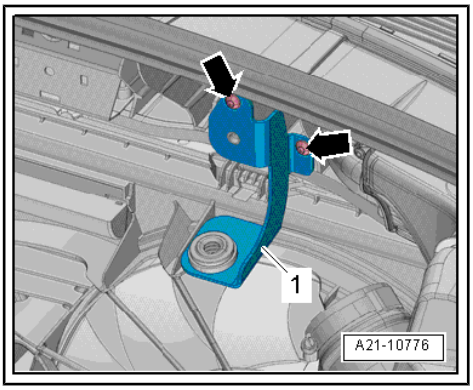

– Release hose clip -1-, lift retaining clip -2- and detach coolant hoses.

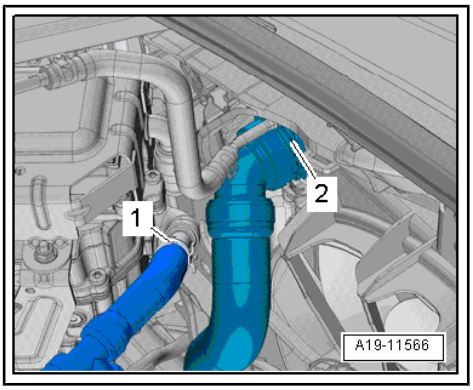

– Move clear electrical wiring harness.

– Press locking tabs on left and right sides of radiator cowl -arrow- and at the same time lift radiator cowl off radiator.

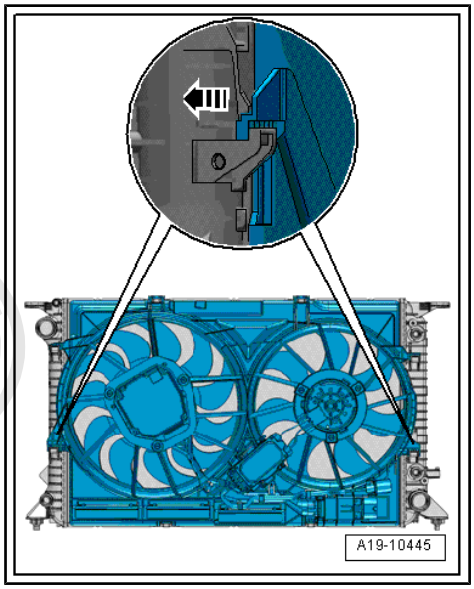

Installing

Installation is carried out in the reverse order; note the following:

– Install air cleaner housing ⇒ page 257 .

– Install closure plate for bumper cover (front) ⇒ General body repairs, exterior; Rep. gr. 63 ; Bumper (front); Removing and installing attachments .

– Electrical connections and routing ⇒ Electrical system; Rep. gr. 97 ; Relay carriers, fuse carriers, electronics boxes and ⇒ Current flow diagrams, Electrical fault finding and Fitting locations.

Note

Do not reuse coolant.

– Connect coolant hose with plug-in connector ⇒ page 218 .

– Fill up with coolant ⇒ page 186 .

Tightening torques

- ⇒ “2.1 Exploded view - charge air system”, page 239
- ⇒ “2.2 Exploded view - hose connections for charge air system”, page 240

4.4 Removing and installing radiator fan - V7-

Removing

Note

Fit all cable ties in the original positions when installing.

– Remove radiator cowl ⇒ page 224 .

– Remove bolts -1- or -2- and detach corresponding fan wheel.

– Remove bolts -arrows- on radiator fan.

– Move electrical wiring harness clear and detach radiator fan.

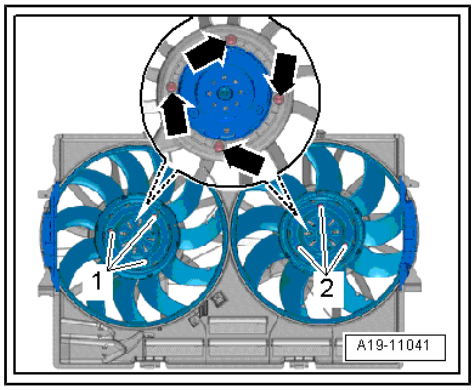

Installing

Installation is carried out in the reverse order; note the following:

– Note installation position of fan wheel.

• Pin -2- must engage in hole -1-.

– Install radiator cowl ⇒ page 224 .

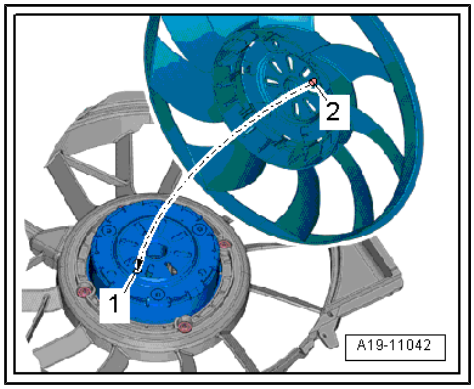

Tightening torques

- ⇒ “4.1.2 Exploded view - radiators/radiator fans (radiator cowl and radiator fan)”, page 219

4.5 Removing and installing auxiliary radiator

Special tools and workshop equipment required

- Hose clamps, up to 25 mm - 3094-

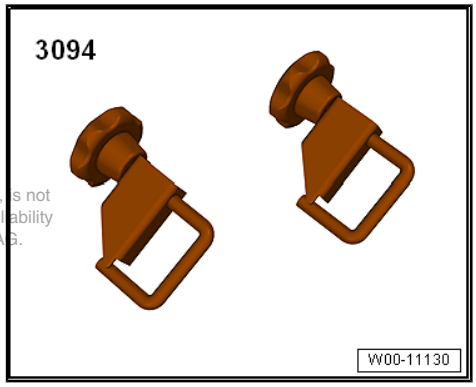

- Hose clip pliers - VAS 6362-

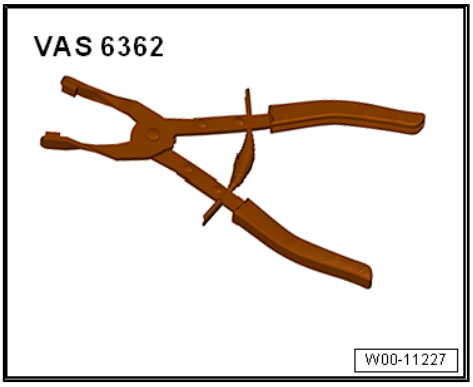

Removing

– Remove closure plate for bumper cover (front) ⇒ General body repairs, exterior; Rep. gr. 63 ; Bumper (front); Removing and installing attachments .

– Place drip tray for workshop hoist - VAS 6208- underneath.

– Clamp off coolant hoses using hose clamps -3094- , release hose clips -arrows- and disconnect hoses.

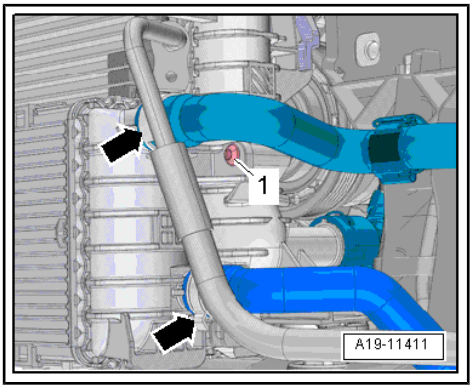

Note

Disregard -item 1-.

– Press down catch -arrow A- and swivel radiator for coolant circuit for power and control electronics for electric drive slightly in direction of -arrow B-.

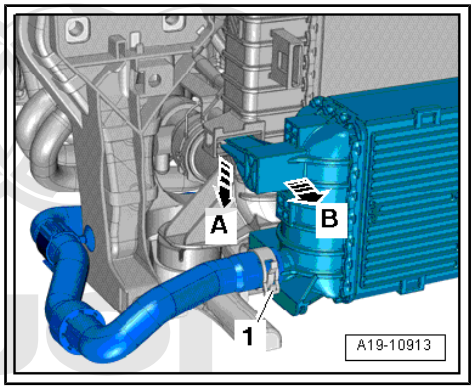

Note

Disregard -item 1-.

– Lift radiator for coolant circuit for power and control electronics for electric drive off radiator -arrows A- and swivel in direction of -arrow B-.

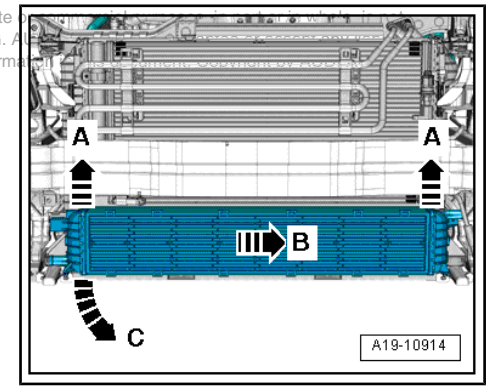

– Detach water radiator (front) for charge air cooling circuit from right side downwards -arrow C-, paying attention to air ducts on both sides.

Installing

Installation is carried out in the reverse order; note the following:

Note

- *If there are slight impressions on the fins, refer to ⇒ page 14 .*
- *Secure all hose connections with the correct type of hose clips (same as original equipment) ⇒ Electronic parts catalogue .*

– Install closure plate for bumper cover ⇒ General body repairs, exterior; Rep. gr. 63 ; Bumper (front); Removing and installing attachments .

Tightening torques

- ⇒ “4.1.1 Exploded view - radiators/radiator fans (radiators)”, page 217

21 – Turbocharging/supercharging

1 Turbocharger

⇒ "1.1 Exploded view - turbocharger", page 229
⇒ "1.2 Removing and installing turbocharger", page 232
⇒ "1.3 Checking vacuum unit for turbocharger", page 236

1.1 Exploded view - turbocharger

Part I

Part II ⇒ page 230
Part III ⇒ page 231

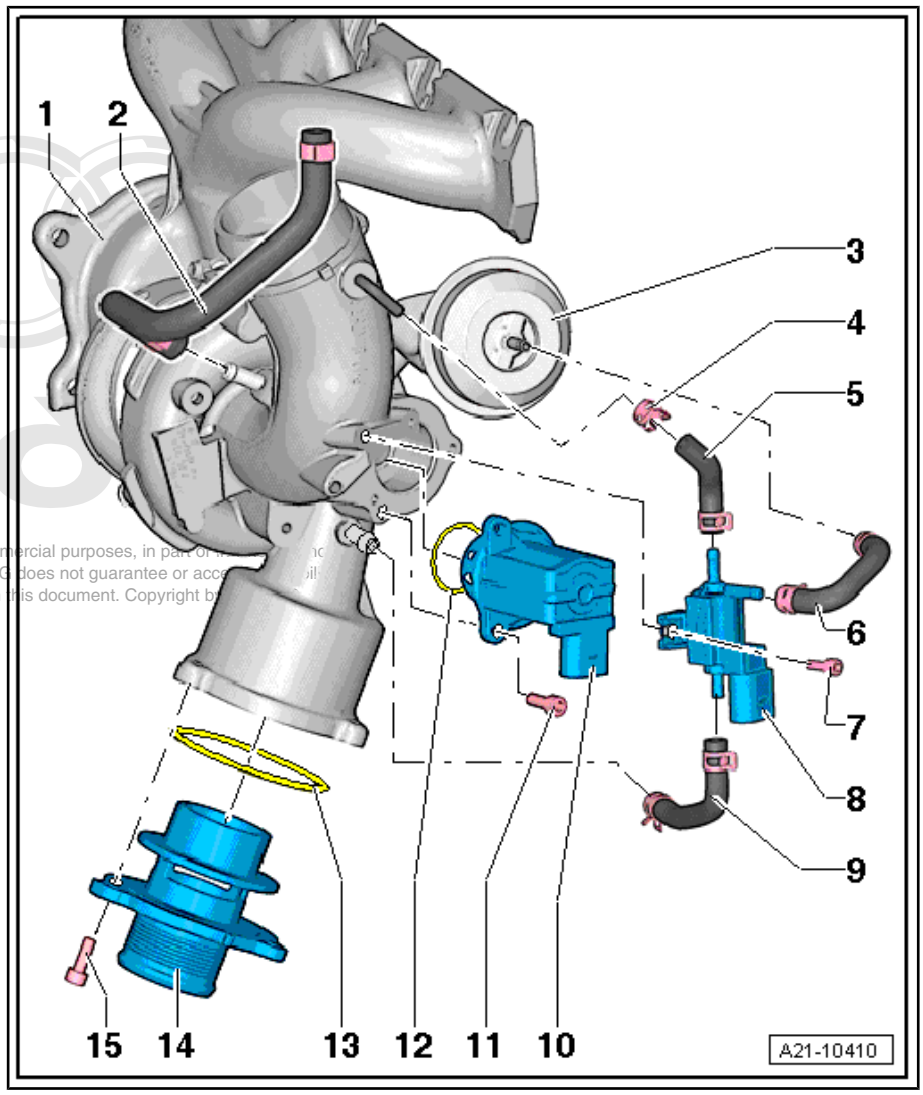

1 - Turbocharger
- ❑ Can only be renewed together with exhaust manifold and vacuum unit as one unit
- ❑ Removing and installing ⇒ page 232

2 - Hose

3 - Vacuum unit for turbocharger
- ❑ Can only be renewed together with turbocharger

4 - Hose clip

5 - Hose

6 - Hose

7 - Bolt
- ❑ 3 Nm

8 - Charge pressure control solenoid valve - N75-

9 - Hose

10 - Turbocharger air recirculation valve - N249-
- ❑ Note installation position ⇒ page 230

11 - Bolt
- ❑ 7 Nm

12 - O-ring
- ❑ Renew

13 - O-ring
- ❑ Renew

14 - Connection

15 - Bolt
- ❑ 9 Nm

Fitting location of turbocharger air recirculation valve - N249-

– Note installation position -arrows-.

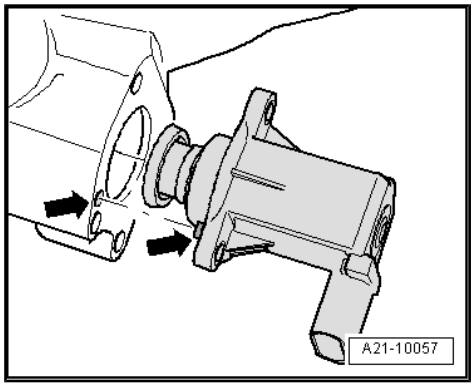

Part II

Part I ⇒ page 229

Part III ⇒ page 231

1 - Turbocharger

- ❑ Can only be renewed together with exhaust manifold and vacuum unit as one unit
- ❑ Removing and installing ⇒ page 232

2 - Bolt

- ❑ 9 Nm

3 - Crankcase breather hose

4 - Gasket

- ❑ Renew

5 - Seal

- ❑ Renew

6 - Bolt

- ❑ 30 Nm

7 - Oil supply line

8 - Bolt

- ❑ 9 Nm

9 - Bolt

- ❑ 9 Nm

10 - O-ring

- ❑ Renew

11 - Seal

- ❑ Renew

12 - Bolt

- ❑ 35 Nm

13 - Bolt

- ❑ 9 Nm

14 - Bolt

- ❑ 35 Nm

15 - Seal

- ❑ Renew

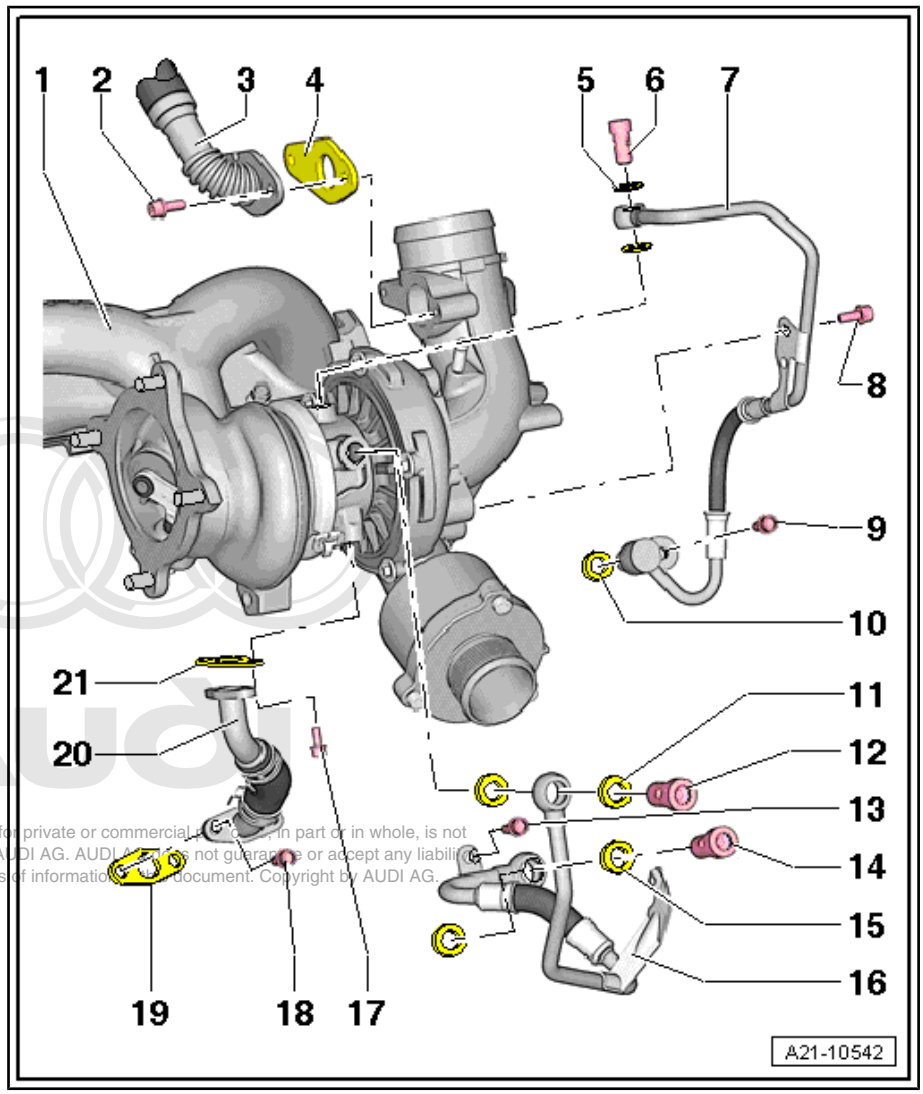

16 - Coolant supply line

17 - Bolt
- ❑ 9 Nm

18 - Bolt
- ❑ 9 Nm

19 - Gasket
- ❑ Renew

20 - Oil return line

21 - Gasket
- ❑ Renew

Part III

Part I ⇒ page 229

Part II ⇒ page 230

1 - Gasket
- ❑ Renew

2 - Nut
- ❑ Renew
- ❑ Tightening sequence ⇒ page 232
- ❑ Lubricate exhaust manifold studs with high-temperature paste. For high-temperature paste refer to ⇒ Electronic parts catalogue

3 - Bolt
- ❑ 35 Nm

4 - Seal
- ❑ Renew

5 - Coolant return hose/pipe

6 - Bolt
- ❑ 9 Nm

7 - Turbocharger
- ❑ Can only be renewed together with exhaust manifold and vacuum unit as one unit
- ❑ Removing and installing ⇒ page 232

8 - Bolt
- ❑ 30 Nm

9 - Bracket

10 - Support

11 - Bolt
- ❑ 30 Nm

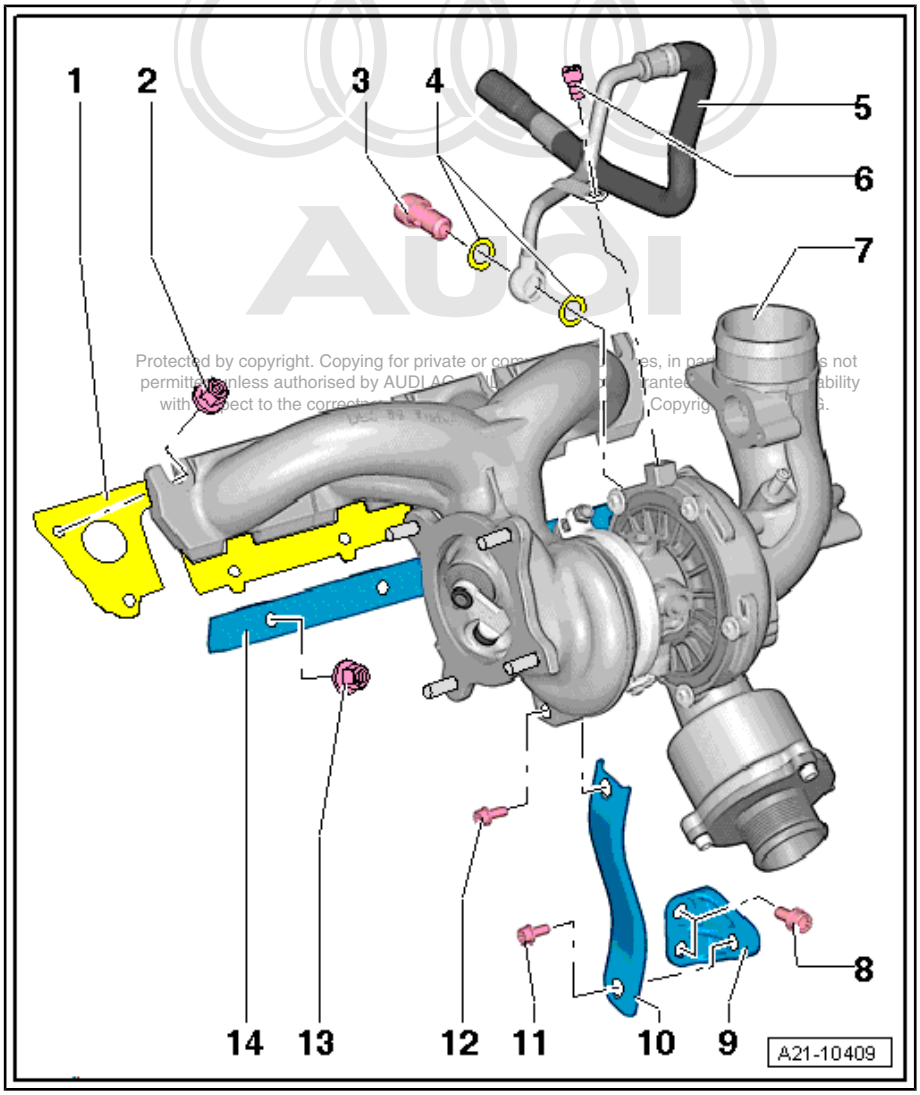

12 - Bolt

- ❑ 30 Nm
- ❑ Coat with high-temperature paste; for high-temperature paste refer to ⇒ Electronic parts catalogue

13 - Nut

- ❑ Do not open when removing turbocharger
- ❑ Renew
- ❑ 30 Nm
- ❑ Lubricate exhaust manifold studs with high-temperature paste. For high-temperature paste refer to ⇒ Electronic parts catalogue

14 - Fastening strip

Turbocharger - tightening sequence

– Tighten nuts -1 to 5- in four stages as follows:

1. Tighten nuts to 5 Nm.
2. Tighten nuts to 12 Nm.
3. Tighten nuts to 16 Nm.
4. Tighten nuts to 25 Nm.

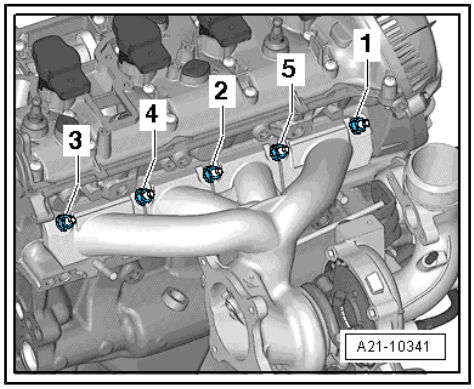

Further tightening torques

Component	Nm
Air pipe (right-side) to sump	10
Air pipe to bracket	10

1.2 Removing and installing turbocharger

Special tools and workshop equipment required

♦ Engine bung set - VAS 6122-

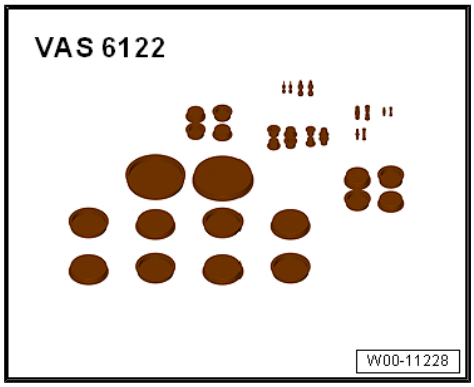

♦ Hose clip pliers - VAS 6340-

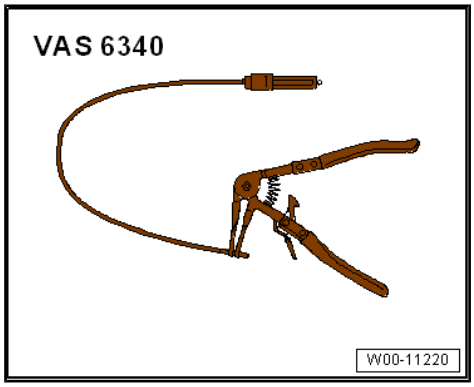

- Hose clip pliers - VAS 6362-

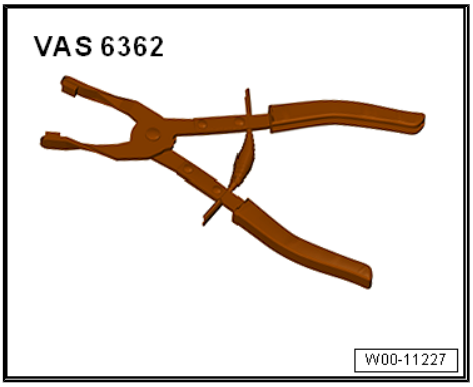

Removing

Note

- *Observe rules for cleanliness* *⇒ page 13* *.*
- *All open inlet and exhaust ports must be sealed with suitable plugs (e.g. from engine bung set - VAS 6122-).*

Caution

If the turbocharger has suffered mechanical damage (e.g. damaged compressor wheel), it is not sufficient merely to fit a new turbocharger. The following work must be performed in order to avoid further damage:

- ***Check air cleaner housing, air filter element and air hoses for dirt and foreign particles.***
- ***Check the entire charge air system (including the charge air cooler) for foreign matter.***
- ***If foreign matter is found in the charge air system, clean all relevant ducts and hoses and renew charge air cooler if necessary.***

– Remove engine cover panel ⇒ page 54 .
– Drain coolant ⇒ page 184 .
– Remove catalytic converter ⇒ page 301 .
– Remove air cleaner housing ⇒ page 257 .
– Disconnect coolant hose -arrow-.

Note

The installation position is shown in the following illustrations with the engine removed.

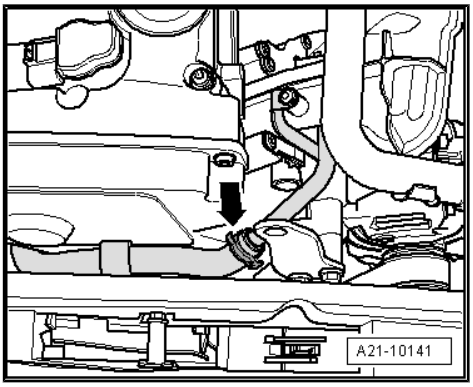

– Remove heat shield -arrows-.

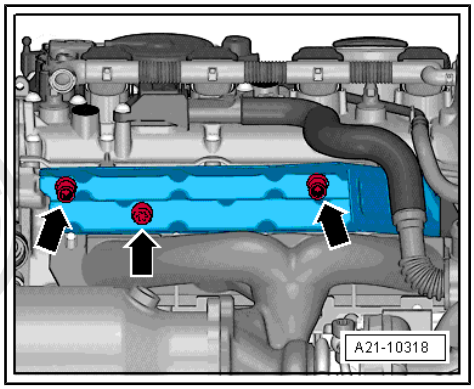

– Remove bolts -arrows- and detach crankcase breather system from turbocharger.

– Press release tabs and disconnect hose -2-.

– Loosen hose clip -1-. Detach air pipe.

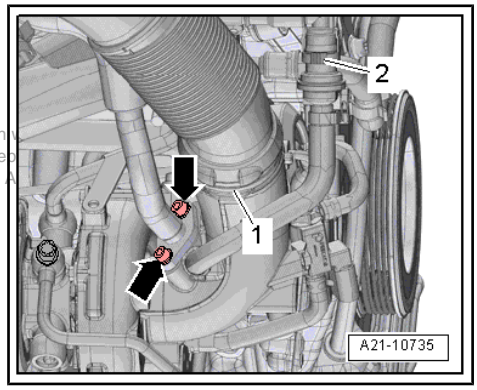

– Remove banjo bolts -1, 2- and bolts -3- and move pipes to one side.

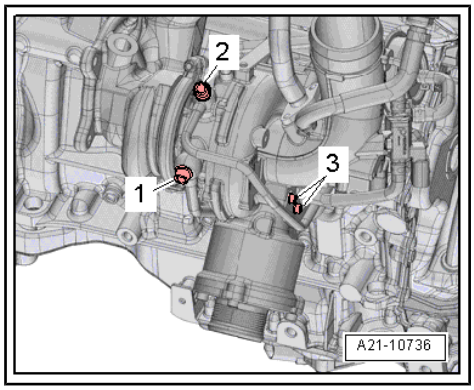

– Unplug electrical connector -arrow- for Lambda probe - G39- and Lambda probe heater - Z19- and move wiring clear.

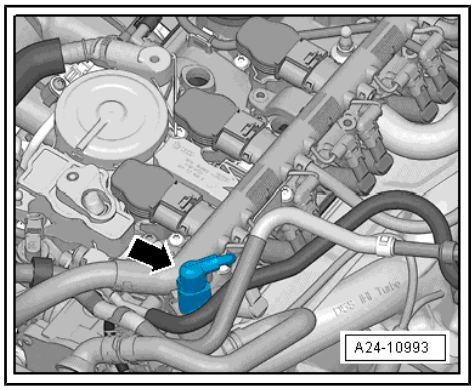

– Open hose clip -2-, detach air hose and swivel to side.

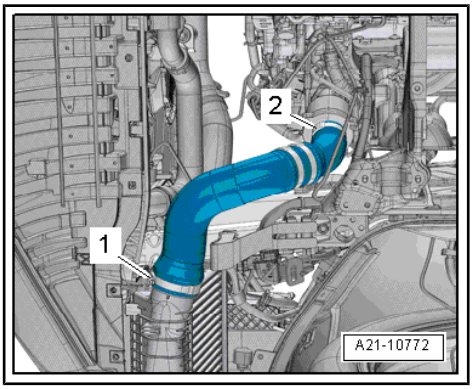

Note

Disregard -item 1-.

– Unplug electrical connectors -1 and 2- and move wiring clear.

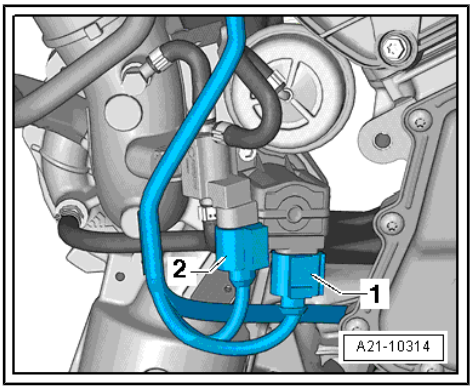

– Slacken bolts -1- from top.
– Remove bolt -2- from underneath.

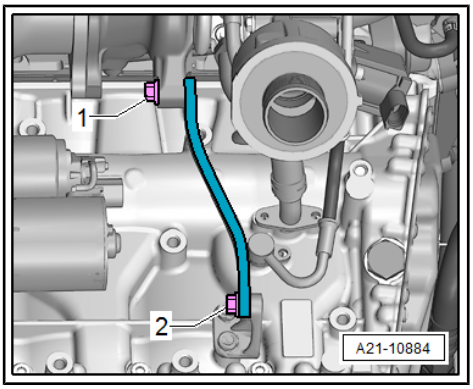

– Remove bolts -arrows- at oil return line.

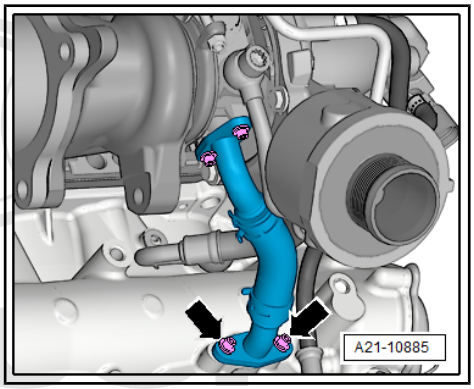

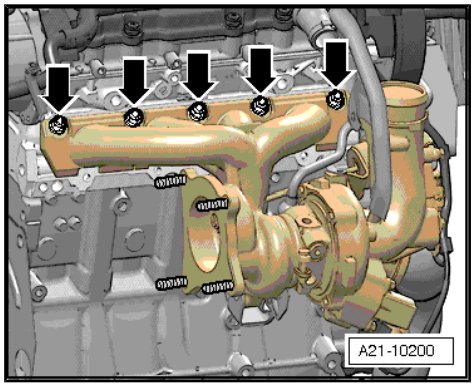

– Remove nuts -arrows-.
– Lift out turbocharger with exhaust manifold.

Installing

Installation is carried out in the reverse order; note the following:

Note

- *Renew seals, gaskets, O-rings and self-locking nuts.*
- *Fill turbocharger with engine oil at connection for oil supply line.*
- *Hose connections and hoses for charge air system must be free of oil and grease before assembly.*
- *Secure all hose connections with the correct type of hose clips (same as original equipment) ⇒ Electronic parts catalogue .*

– Install catalytic converter ⇒ page 301 .
– Align the exhaust system so it is free of stress ⇒ page 298 .
– Electrical connections and routing ⇒ Electrical system; Rep. gr. 97 ; Relay carriers, fuse carriers, electronics boxes and ⇒ Current flow diagrams, Electrical fault finding and Fitting locations.
– Install engine cover panel ⇒ page 54 .

Note

Do not reuse coolant.

– Fill up with coolant ⇒ page 186 .
– Check oil level ⇒ Maintenance ; Booklet 410 .

Note

After installing turbocharger, allow engine to idle for approx. 1 minute and do not rev up immediately to ensure turbocharger is supplied with oil.

Tightening torques

- ⇒ “3.1 Exploded view - cylinder head”, page 117 .
- ⇒ “1.1 Exploded view - turbocharger”, page 229 .

1.3 Checking vacuum unit for turbocharger

Special tools and workshop equipment required

- Hand vacuum pump - VAS 6213-

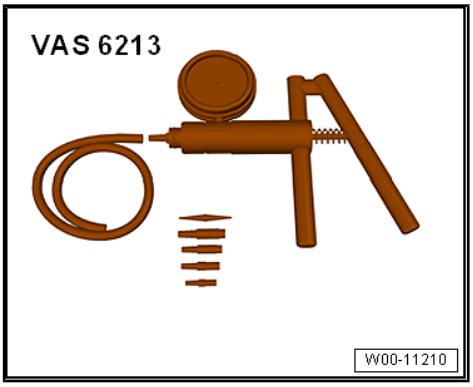

Test condition:

- Hose from turbocharger via charge pressure control solenoid valve - N75- to vacuum unit must not be blocked.
- Charge pressure control solenoid valve - N75- OK.

Procedure:

– Remove engine cover panel ⇒ page 54 .

– Connect hand vacuum pump - VAS 6213- to vacuum unit -arrow-.

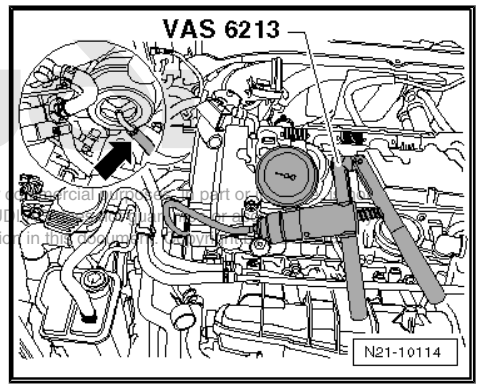

– Move adjuster ring -1- on hand vacuum pump - VAS 6213- to position -B- to select “pressure”.

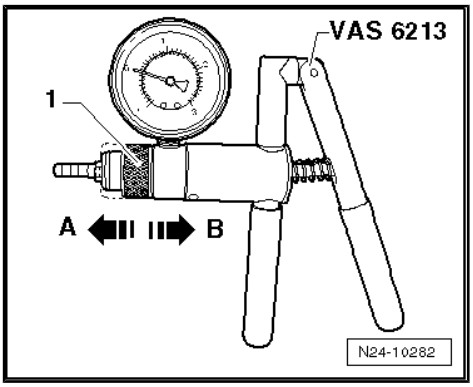

> ⚠ **Caution**
>
> *The pressure must not exceed 750 mbar. The vacuum unit could be damaged if the pressure is exceeded.*

– Operate hand vacuum pump - VAS 6213- several times and at the same time observe linkage.

The linkage -A- should start to move at a pressure of approx. 300 mbar and be at its limit stop at a pressure of approx. 700 mbar.

The linkage should travel approx. 10 mm.

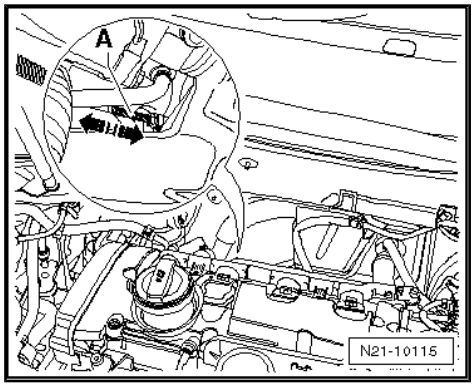

Note

If it is not possible to build up pressure with hand vacuum pump - VAS 6213- or if the pressure drops again immediately, check hand vacuum pump - VAS 6213- and connecting hoses for leaks. If no fault is detected: renew turbocharger *⇒ page 232* *.*

2 Charge air system

2.1 Exploded view - charge air system

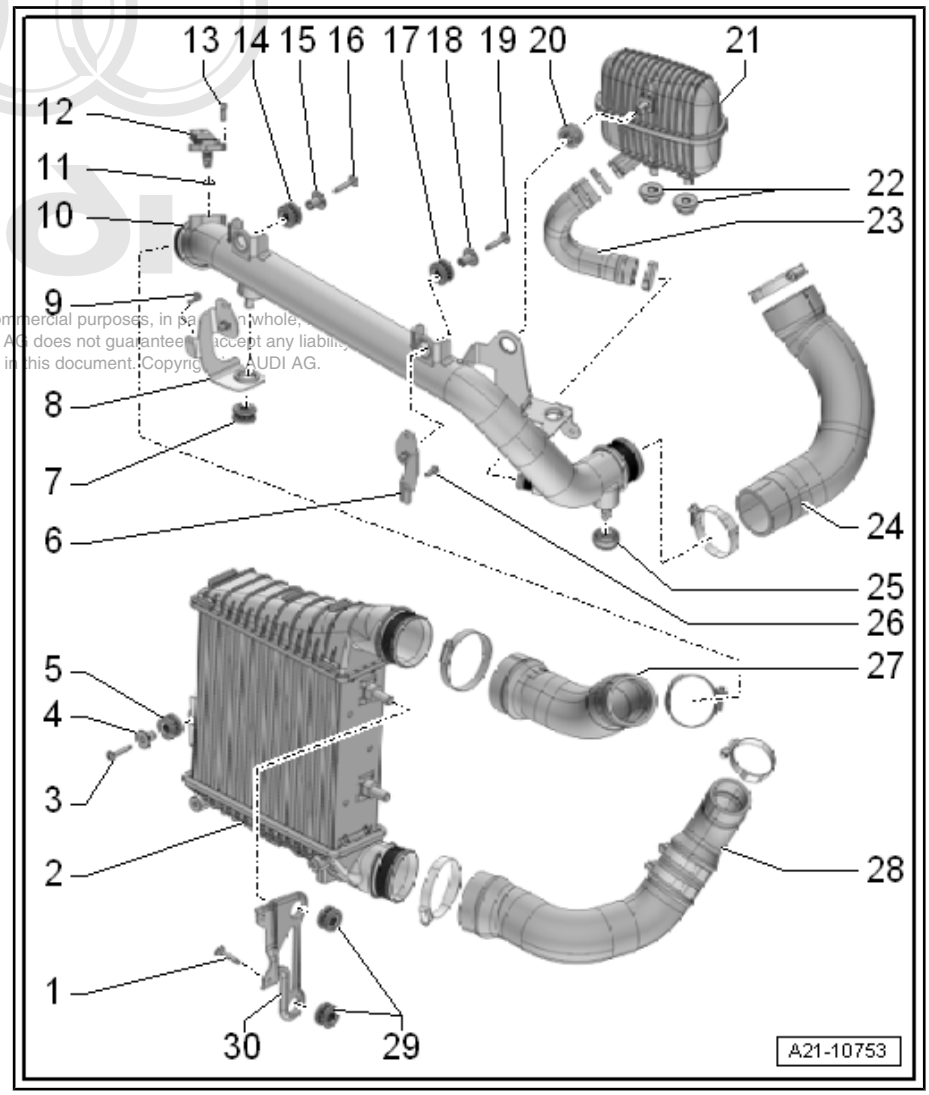

1 - Bolt
- ❑ 9 Nm

2 - Charge air cooler
- ❑ Removing and installing ⇒ page 240

3 - Bolt
- ❑ 8 Nm

4 - Spacer sleeve

5 - Rubber grommet

6 - Rubber grommet

7 - Retainer
- ❑ For air pipe

8 - Bracket
- ❑ For air pipe

9 - Bolt
- ❑ 3.5 Nm

10 - Air pipe

11 - O-ring
- ❑ Renew

12 - Charge pressure sender - G31-
- ❑ Removing and installing ⇒ page 242

13 - Bolt
- ❑ 9 Nm

14 - Rubber grommet

15 - Spacer sleeve

16 - Bolt
- ❑ Self-locking
- ❑ Renew
- ❑ 8 Nm

17 - Rubber grommet

18 - Spacer sleeve

19 - Bolt
- ❑ Self-locking

- ❑ Renew
- ❑ 8 Nm

20 - Rubber grommet

21 - Resonator

22 - Rubber grommets

23 - Air hose

24 - Air hose

25 - Rubber grommet

26 - Bolt

- ❑ 3.5 Nm

27 - Air hose

28 - Air hose

29 - Rubber grommets

30 - Bracket

- ❑ For charge air cooler

2.2 Exploded view - hose connections for charge air system

Note

- *Hose connections and air pipes and hoses must be free of oil and grease before assembly.*
- *Secure all hose connections with the correct type of hose clips (same as original equipment) ⇒ Electronic parts catalogue .*
- *To ensure that the air hoses can be properly secured at their connections, spray rust remover onto the worm thread of used hose clips before installing.*

Tightening torque for

1 - Hose clip -a- = 13 mm wide: 5.5 Nm

2 - Hose clip -b- = 9 mm wide: 3.4 Nm

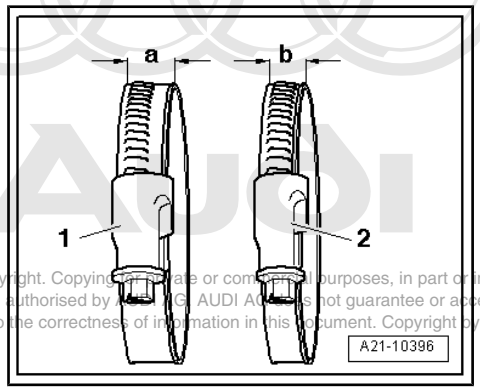

2.3 Removing and installing charge air cooler

Removing

– Remove bumper cover (front) ⇒ General body repairs, exterior; Rep. gr. 63 ; Bumper (front); Removing and installing bumper cover .

– Remove air cleaner housing ⇒ page 257 .

– Unclip air duct -arrow-.

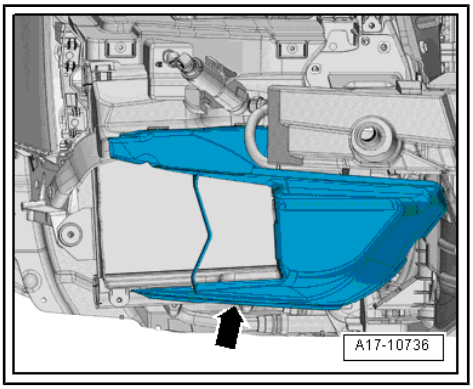

– Move clear electrical wiring harness -arrows-.
– Unscrew bolts -1 and 2- and detach connecting piece.

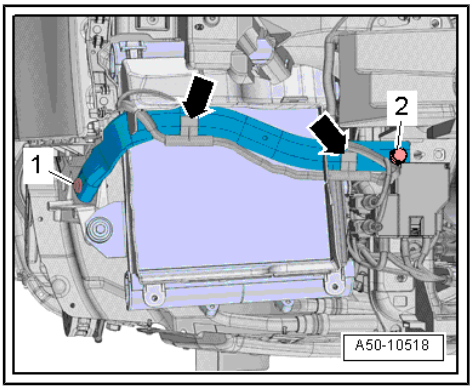

– Release hose clips -arrows- and detach air hoses.

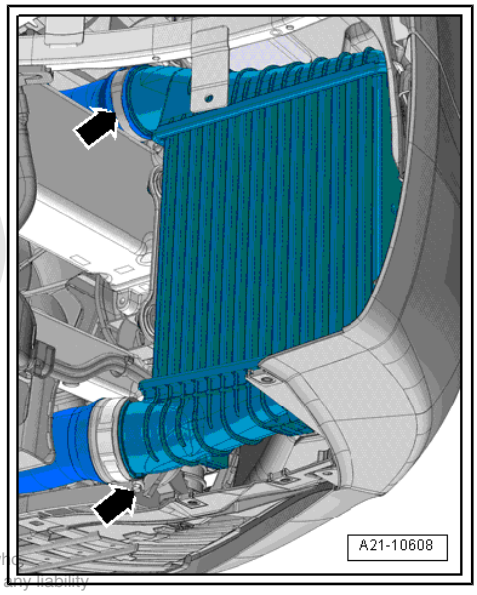

– Remove bolts -arrows- and detach air duct -2-.

– Remove bolt -1- and detach charge air cooler.

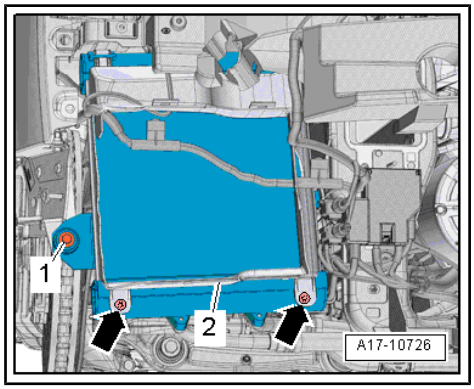

Installing

Installation is carried out in the reverse order; note the following:

Note

If there are slight impressions on the fins, refer to ⇒ page 14 .

– Install air cleaner housing ⇒ page 257 .

– Install bumper cover (front) ⇒ General body repairs, exterior; Rep. gr. 63 ; Bumper (front); Removing and installing bumper cover .

Tightening torques

- ⇒ "2.1 Exploded view - charge air system", page 239
- ⇒ "2.2 Exploded view - hose connections for charge air system", page 240
- ⇒ General body repairs, exterior; Rep. gr. 63 ; Bumper (front); Exploded view - impact bar .

2.4 Removing and installing charge pressure sender - G31-

Removing

– Unplug electrical connector -1-.

– Unscrew bolts -arrows- and remove charge pressure sender - G31- .

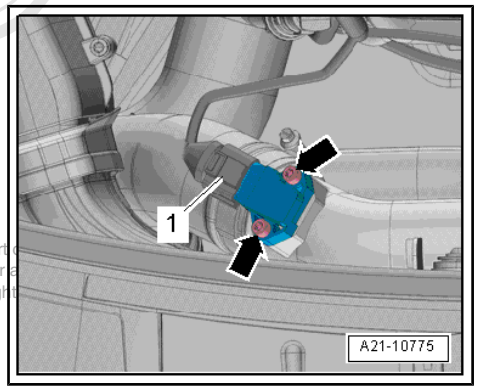

Installing

Installation is carried out in the reverse order; note the following:

Note

Fit new O-ring.

Tightening torques

- ⇒ "2.1 Exploded view - charge air system", page 239

2.5 Checking charge air system for leaks

Special tools and workshop equipment required

♦ Charge air system tester - V.A.G 1687-

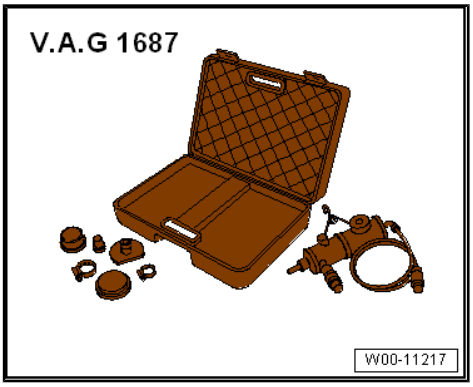

Procedure

– Remove noise insulation (front) ⇒ General body repairs, exterior; Rep. gr. 66 ; Noise insulation; Removing and installing noise insulation .

– Release hose clip -2-, detach air hose and press to one side.

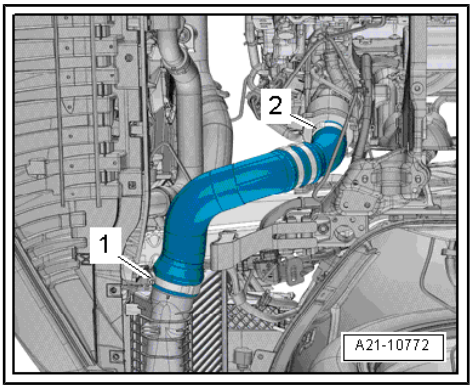

Note

Disregard -item 1-.

– Insert adapter - 1687/12- into air hose -1- and secure with hose clip.

– Connect charge air system tester - V.A.G 1687- as shown on illustration.

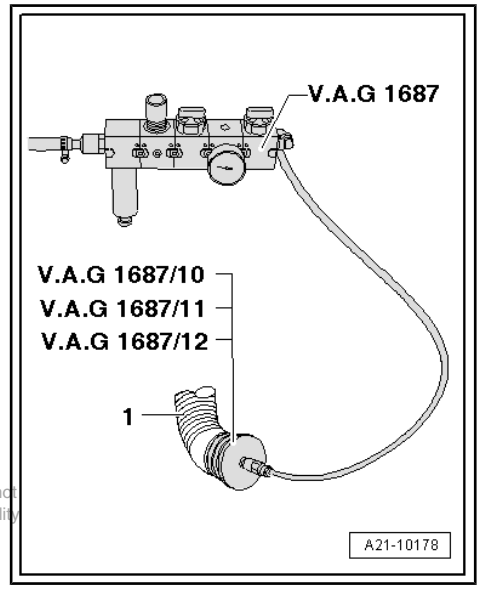

Prepare charge air system tester - V.A.G 1687- as follows:

– Unscrew pressure control valve -2- completely and close valves -3- and -4-.

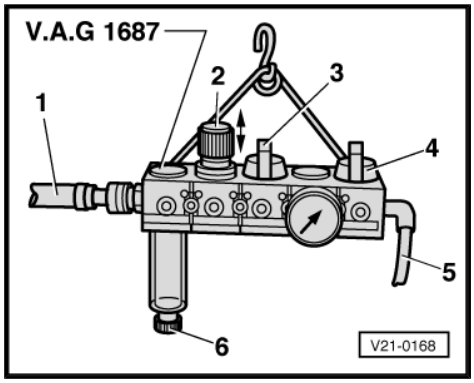

Note

Make sure knob is pulled out before turning pressure control valve -2-.

– Using a commercially available connection piece, connect charge air system tester - V.A.G 1687- to compressed air -1-.

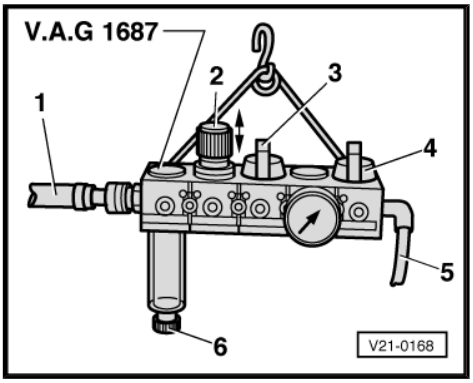

Note

If there is water in sight glass, remove drain plug -6- and drain water.

– Open valve -3-.

Caution

Risk of damage if pressure is set too high.

- ***The pressure must not exceed 0.5 bar.***

– Adjust pressure to 0.5 bar via pressure control valve -2-.

– Open valve -4- and wait until test system is pressurised. If necessary, adjust pressure to 0.5 bar again.

– Check charge air system for audible leaks or leaks that can be felt with the hand; apply commercially available leak detecting spray or use ultrasonic tester - V.A.G 1842- .

Note

- *A small amount of air escapes through the valves and enters the engine. Therefore it is not possible to perform a pressure retention test.*
- *For operation of ultrasonic tester -V.A.G 1842- , refer to ⇒ Operating instructions .*
- *Release pressure in test circuit by detaching hose coupling from adapter before removing adapter.*

Assembling

Installation is carried out in the reverse order; note the following:

Note

Renew gasket and O-rings.

Tightening torques

- ⇒ “2.2 Exploded view - hose connections for charge air system”, page 240
- ⇒ General body repairs, exterior; Rep. gr. 66 ; Noise insulation; Exploded view - noise insulation

24 – Mixture preparation - injection

1 Injection system

⇒ "1.1 Overview of fitting locations - injection system", page 246

⇒ "1.2 Filling and bleeding fuel system", page 252

1.1 Overview of fitting locations - injection system

Overview of fitting locations - engine compartment

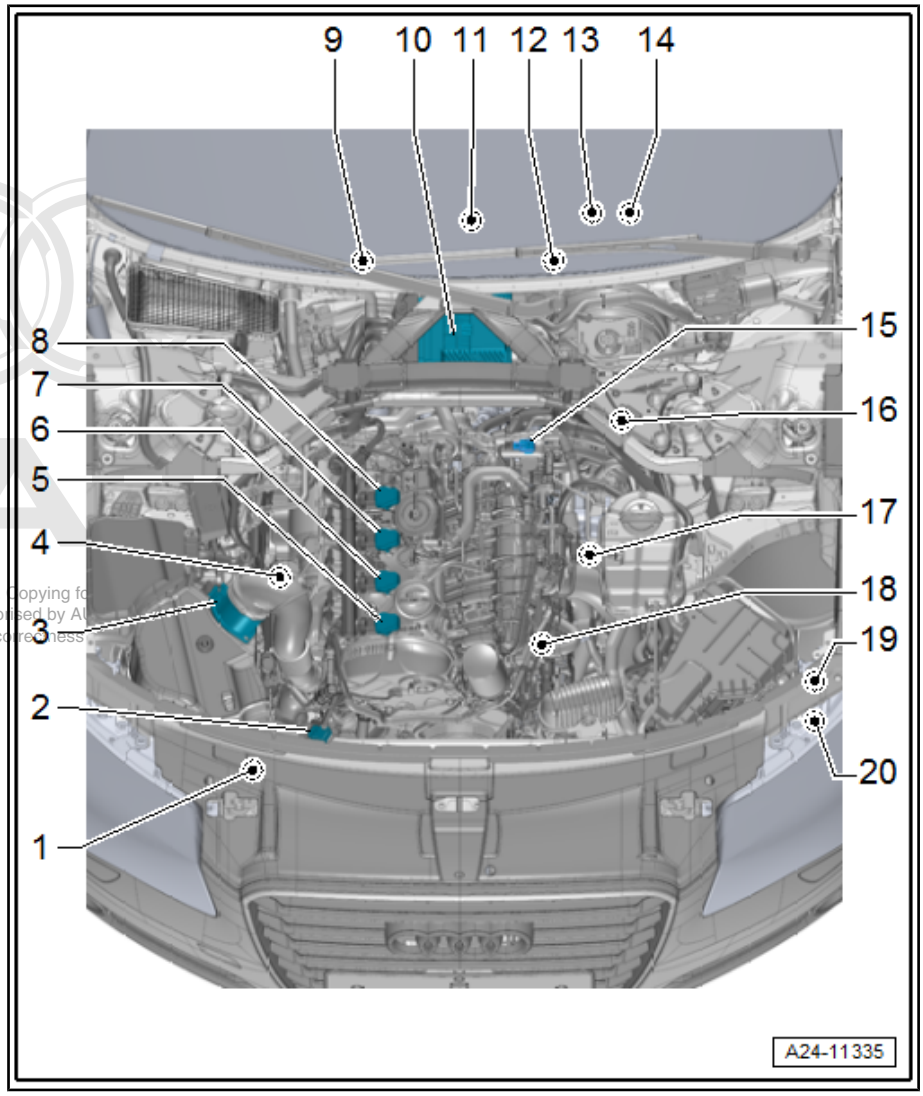

1 - Secondary air pump motor - V101-
- ❑ Fitting location ⇒ page 248
- ❑ Exploded view ⇒ page 306

2 - Charge pressure sender - G31-
- ❑ Exploded view ⇒ page 239

3 - Air mass meter - G70-
- ❑ Exploded view ⇒ page 256

4 - Right electrohydraulic engine mounting solenoid valve - N145-
- ❑ Fitting location ⇒ page 248

5 - Ignition coil 1 with output stage - N70-
- ❑ Exploded view ⇒ page 309

6 - Ignition coil 2 with output stage - N127-
- ❑ Exploded view ⇒ page 309

7 - Ignition coil 3 with output stage - N291-
- ❑ Exploded view ⇒ page 309

8 - Ignition coil 4 with output stage - N292-
- ❑ Exploded view ⇒ page 309

9 - Gearbox mounting valve 1 - N262-
- ❑ Fitting location ⇒ page 248

10 - Engine control unit - J623-
- ❑ Removing and installing ⇒ page 291

11 - Auxiliary hydraulic pump 1 for gearbox oil - V475-
- ❑ Fitting location ⇒ page 249

12 - Gearbox mounting valve 2 - N263-

- ❑ Fitting location ⇒ page 248

13 - Accelerator position sender - G79- and accelerator position sender 2 - G185-

- ❑ Fitting location ⇒ page 247
- ❑ Exploded view ⇒ Fuel supply system, petrol engines; Rep. gr. 20 ; Accelerator mechanism; Exploded view - accelerator pedal module

14 - Brake light switch - F- / brake pedal position sender - G100-

- ❑ Fitting location ⇒ page 247

15 - Pressure sensor for activated charcoal filter system - G804-

- ❑ Country-specific version

16 - Brake servo pressure sensor - G294-

- ❑ Fitting location ⇒ page 248

17 - Left electrohydraulic engine mounting solenoid valve - N144-

- ❑ Fitting location ⇒ page 248

18 - Continued coolant circulation pump - V51-

- ❑ Exploded view ⇒ page 213

19 - Coolant pump for low-temperature circuit - V468-

- ❑ Fitting location ⇒ page 249

20 - Brake servo vacuum pump - V469-

- ❑ Fitting location ⇒ page 249

Accelerator position sender - G79- and accelerator position sender 2 - G185-

- ♦ Integrated in accelerator pedal module

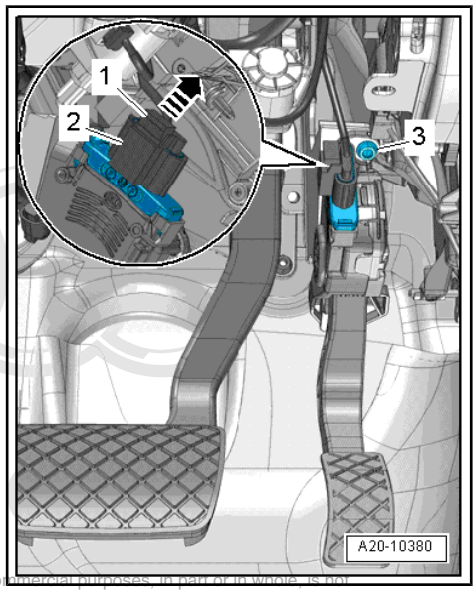

Note

The accelerator position sender - G79- and accelerator position sender 2 - G185- are integrated in the accelerator pedal module and cannot be renewed individually.

Removing and installing ⇒ Fuel supply system, petrol engines; Rep. gr. 20 ; Accelerator mechanism; Removing and installing accelerator pedal module with accelerator position sender -G79- / -G185-

Fitting location of brake light switch - F- / brake pedal position sender - G100-

- ♦ In footwell on brake pedal

1 - Brake light switch - F-

2 - Brake pedal position sender - G100-

Removing and installing ⇒ Brake system; Rep. gr. 45 ; Sensors; Removing and installing brake light switch

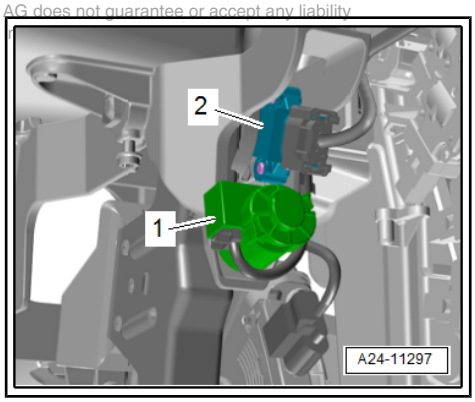

Fitting location of secondary air pump motor - V101-

- On cross member for torque reaction support

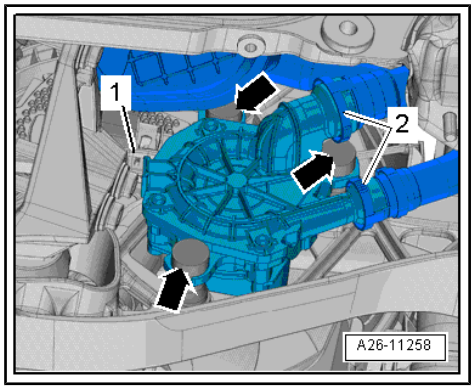

Fitting location of electrohydraulic engine mounting solenoid valves -N144- / -N145-

- Integrated in engine mountings on both sides

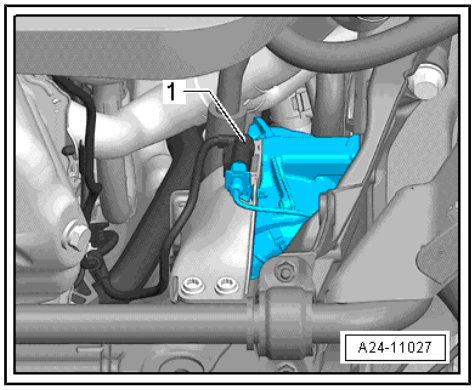

Fitting location of gearbox mounting valves -N262- / -N263-

1 - Gearbox mounting valve 1 - N262-

2 - Gearbox mounting valve 2 - N263-

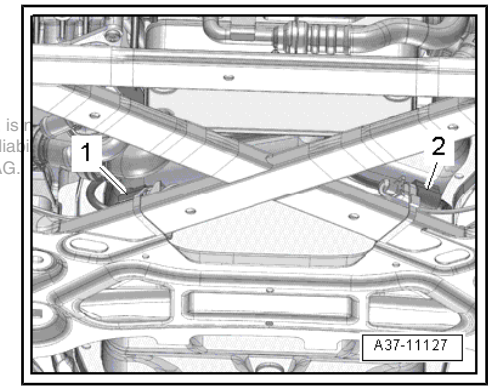

Fitting location of brake servo pressure sensor - G294-

- In engine compartment (rear left)

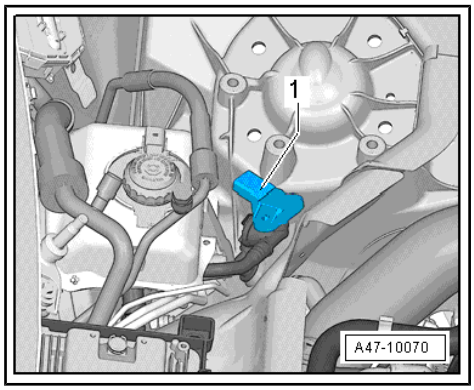

Fitting location of coolant pump for low-temperature circuit - V468- , brake servo vacuum pump - V469-

1 - Brake servo vacuum pump - V469-

2 - Coolant pump for low-temperature circuit - V468-

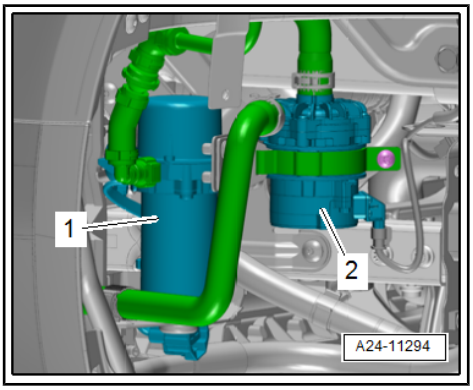

Fitting location of exhaust flap control unit - J883-

♦ On rear silencer tailpipe

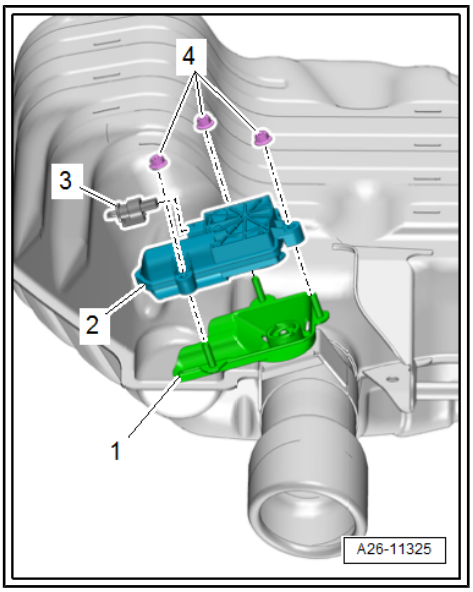

Fitting location of auxiliary hydraulic pump 1 for gearbox oil - V475-

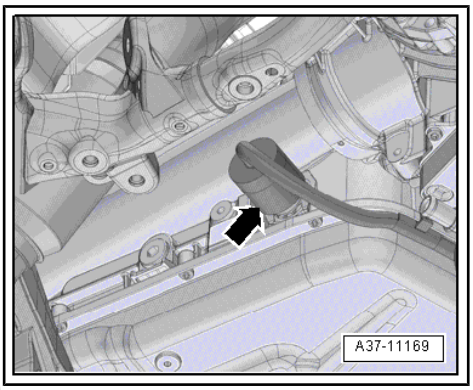

Overview of fitting locations - engine (view from left side)

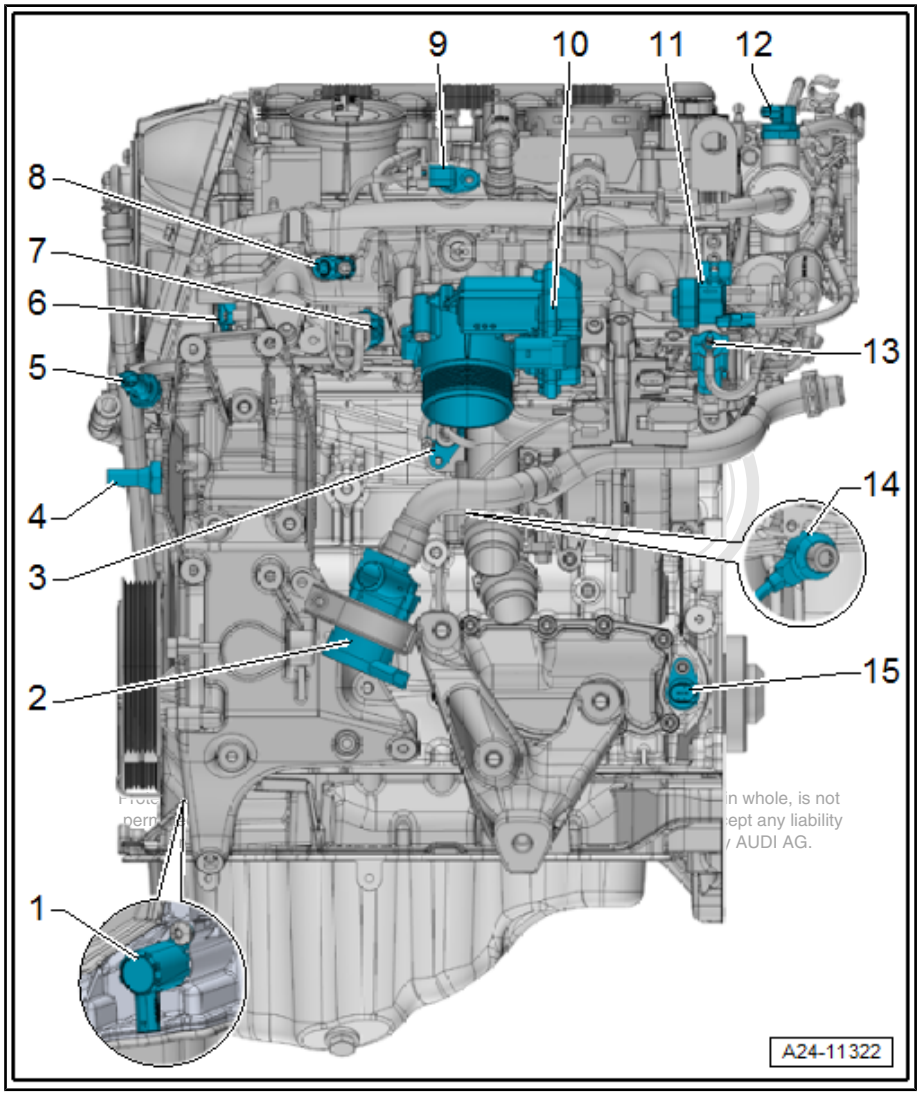

1 - Valve for oil pressure control - N428-

- ❑ Exploded view ⇒ page 161

2 - Not fitted

3 - Coolant temperature sender - G62-

- ❑ Exploded view ⇒ page 192

4 - Oil pressure switch - F22-

- ❑ Exploded view ⇒ page 176

5 - Oil pressure switch for reduced oil pressure - F378-

- ❑ Exploded view ⇒ page 176

6 - Intake manifold flap potentiometer - G336-

- ❑ Exploded view ⇒ page 259

7 - Fuel pressure sender - G247-

- ❑ Exploded view ⇒ page 271

8 - Intake air temperature sender - G42-

- ❑ Exploded view ⇒ page 259

9 - Hall sender - G40-

- ❑ Exploded view ⇒ page 309

10 - Throttle valve module - J338-

- ❑ Including throttle valve drive (electric throttle operation) - G186- , angle sender for throttle valve drive - G187- and angle sender 2 for throttle valve drive - G188-
- ❑ Exploded view ⇒ page 259

11 - Activated charcoal filter solenoid valve 1 - N80-

12 - Fuel metering valve - N290-

- ❑ Integrated in high-pressure pump
- ❑ Exploded view ⇒ page 284

13 - Intake manifold flap valve - N316-

- ❑ Exploded view ⇒ page 259

14 - Knock sensor 1 - G61-

- ❑ Exploded view ⇒ page 309

15 - Engine speed sender - G28-

- ❑ Exploded view ⇒ page 309

Overview of fitting locations - engine (view from right side)

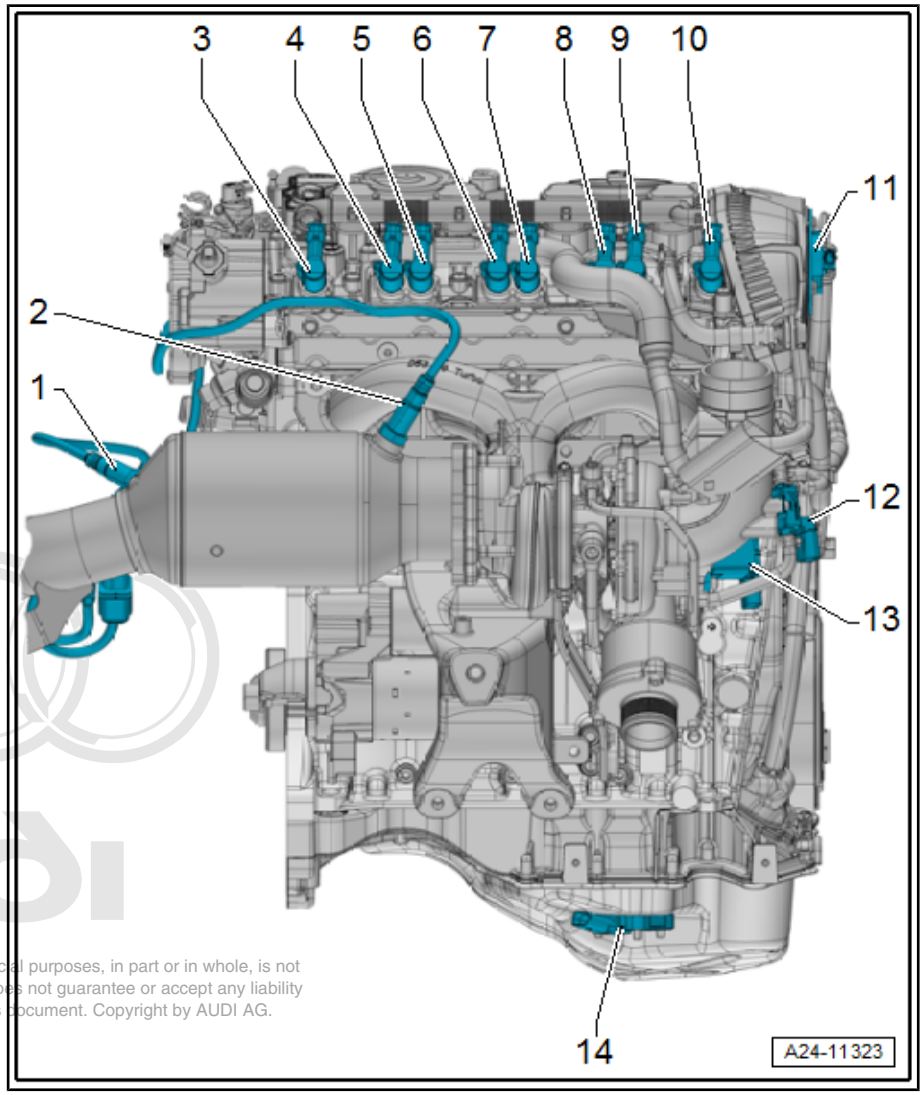

1 - Lambda probe after catalytic converter - G130- and Lambda probe heater 1 after catalytic converter - Z29-

- ❑ Exploded view ⇒ page 287

2 - Lambda probe - G39- and Lambda probe heater - Z19-

- ❑ Exploded view ⇒ page 287

3 - Actuator 8 for camshaft adjustment - F373- (for cylinder No. 4)

- ❑ Exploded view ⇒ page 133

4 - Actuator 7 for camshaft adjustment - F372- (for cylinder No. 4)

5 - Actuator 5 for camshaft adjustment - F370- (for cylinder No. 3)

6 - Actuator 6 for camshaft adjustment - F371- (for cylinder No. 3)

7 - Actuator 4 for camshaft adjustment - F369- (for cylinder No. 2)

8 - Actuator 3 for camshaft adjustment - F368- (for cylinder No. 2)

9 - Actuator 1 for camshaft adjustment - F366- (for cylinder No. 1)

10 - Actuator 2 for camshaft adjustment - F367- (for cylinder No. 1)

11 - Camshaft control valve 1 - N205-

- ❑ Exploded view ⇒ page 94

12 - Charge pressure control solenoid valve - N75-

- ❑ Exploded view ⇒ page 229

13 - Turbocharger air recirculation valve - N249-

- ❑ Exploded view ⇒ page 229

14 - Oil level and oil temperature sender - G266-

- ❑ Exploded view ⇒ page 161

Overview of fitting locations - engine/gearbox (view from rear)

1 - Coolant pump for high-temperature circuit - V467-

- ❑ Exploded view ⇒ page 194

2 - Coolant circulation pump - V50-

- ❑ Exploded view ⇒ page 195

3 - Solenoid for coolant circuit - N492-

- ❑ Exploded view ⇒ page 195

4 - Coolant shut-off valve - N82-

- ❑ Exploded view ⇒ page 195

5 - Secondary air inlet valve - N112-

- ❑ Exploded view ⇒ page 306

6 - Sender 1 for secondary air pressure - G609-

- ❑ Exploded view ⇒ page 306

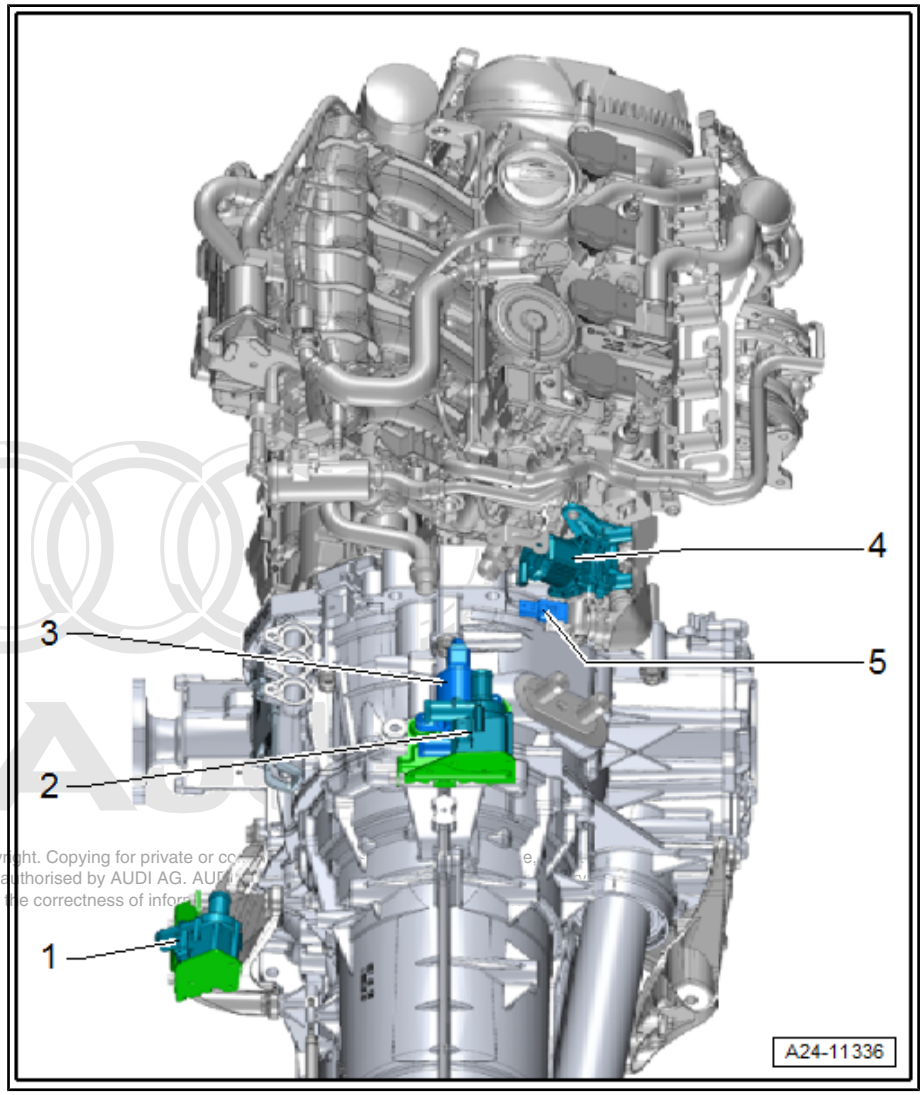

1.2 Filling and bleeding fuel system

Special tools and workshop equipment required

- Vehicle diagnostic tester

> ⚠ **WARNING**
>
> *The fuel system operates at extremely high pressure. This can cause injury.*
>
> - *The injection system consists of a high-pressure section (maximum approx. 120 bar) and a low-pressure section (approx. 6 bar).*
> - *Prior to opening the high-pressure section (e.g. when removing the high-pressure pump, fuel rail, injectors, fuel pipes or fuel pressure sender - G247-), the fuel pressure in the high-pressure section must be reduced to a specified level. The procedure is described below.*

Reducing fuel pressure in high-pressure section:

– Connect ⇒ Vehicle diagnostic tester, select function “Reducing fuel pressure” in “Guided Functions” and follow on-screen instructions.

• Fuel pressure will drop to a specified value.

– Switch off ignition.

The fuel rail is still filled with fuel, however it is no longer under high pressure.

WARNING

There is a risk of injury: avoid skin contact with fuel.

- *Wear safety goggles and protective clothing when opening the fuel system.*
- *Before opening the high-pressure section of the fuel system, place a clean cloth around the connection to catch escaping fuel.*

– The high-pressure system must be opened »immediately« after reducing the fuel pressure; wrap a clean cloth around the connection. Catch the escaping fuel.

Note

The pressure will increase again due to the effect of residual heat if the high-pressure system is not opened immediately.

– Erase any entries in event memory resulting from work performed ⇒ Vehicle diagnostic tester, `Guided Functions`, `Interrogate event memory`, then `Generate readiness code`.

2 Vacuum system

⇒ “2.1 Checking dual non-return valve”, page 254

⇒ “2.2 Checking vacuum system”, page 255

2.1 Checking dual non-return valve

Special tools and workshop equipment required

♦ Hand vacuum pump - VAS 6213-

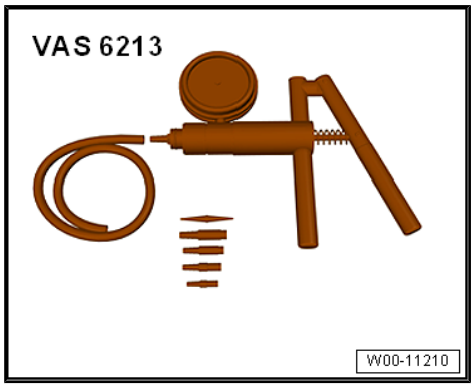

♦ Auxiliary measuring set - V.A.G 1594C-

Test condition:

- Activated charcoal filter solenoid valve 1 - N80- has been checked with ⇒ Vehicle diagnostic tester and is OK.

– Remove engine cover panel ⇒ page 54 .

– Unplug connector -1- and detach breather hose -arrow- from activated charcoal filter solenoid valve 1 - N80- .

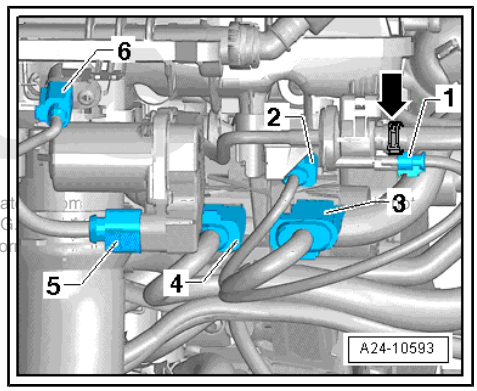

– Move adjuster ring -1- on hand vacuum pump - VAS 6213- to position -A- to select "vacuum".

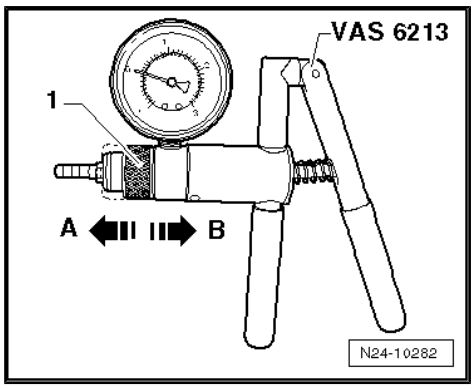

– Connect hand vacuum pump - VAS 6213- to activated charcoal filter solenoid valve 1 - N80- .

– Connect contacts of activated charcoal filter solenoid valve 1 - N80- -1- to battery using test leads. This will open activated charcoal filter solenoid valve 1 - N80- .

Then immediately operate hand vacuum pump - VAS 6213- several times.

• Vacuum should build up.

– Again disconnect battery to cut off current supply.

If vacuum does not build up:

– Renew dual non-return valve.

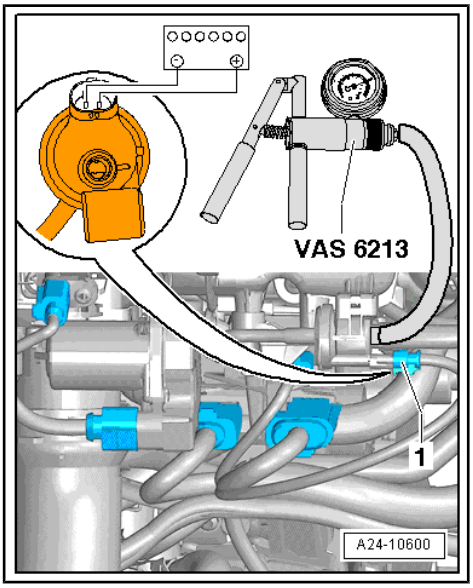

Note

Dual non-return valve, activated charcoal filter solenoid valve 1 - N80- and plastic hoses are combined as one unit and can only be renewed together.

2.2 Checking vacuum system

Special tools and workshop equipment required

♦ Hand vacuum pump - VAS 6213-

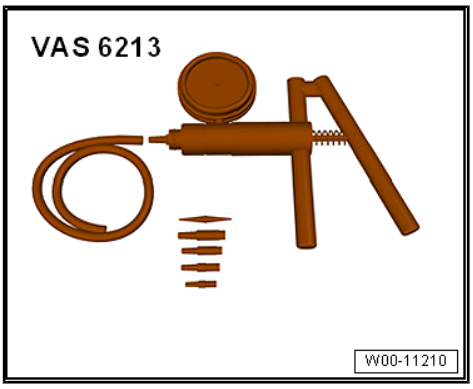

Procedure

– Check all vacuum lines in the complete vacuum system for:

♦ Cracks

♦ Traces of animal bites

♦ Kinked or crushed lines

♦ Lines porous or leaking

– Check vacuum line to solenoid valve and from solenoid valve to corresponding component.

– If a fault is stored in the event memory, check all vacuum lines leading to the corresponding component, and also check the remaining vacuum lines leading to other components.

– If it is not possible to build up pressure with the hand vacuum pump - VAS 6213- or if the pressure drops again immediately, check the hand vacuum pump and connecting hoses for leaks.

– If it is not possible to build up pressure with the hand vacuum pump - VAS 6213- or if the pressure drops again immediately, check the hand vacuum pump and connecting hoses for leaks.

3 Air cleaner

⇒ “3.1 Exploded view - air cleaner housing”, page 256

⇒ “3.2 Removing and installing air cleaner housing”, page 257

3.1 Exploded view - air cleaner housing

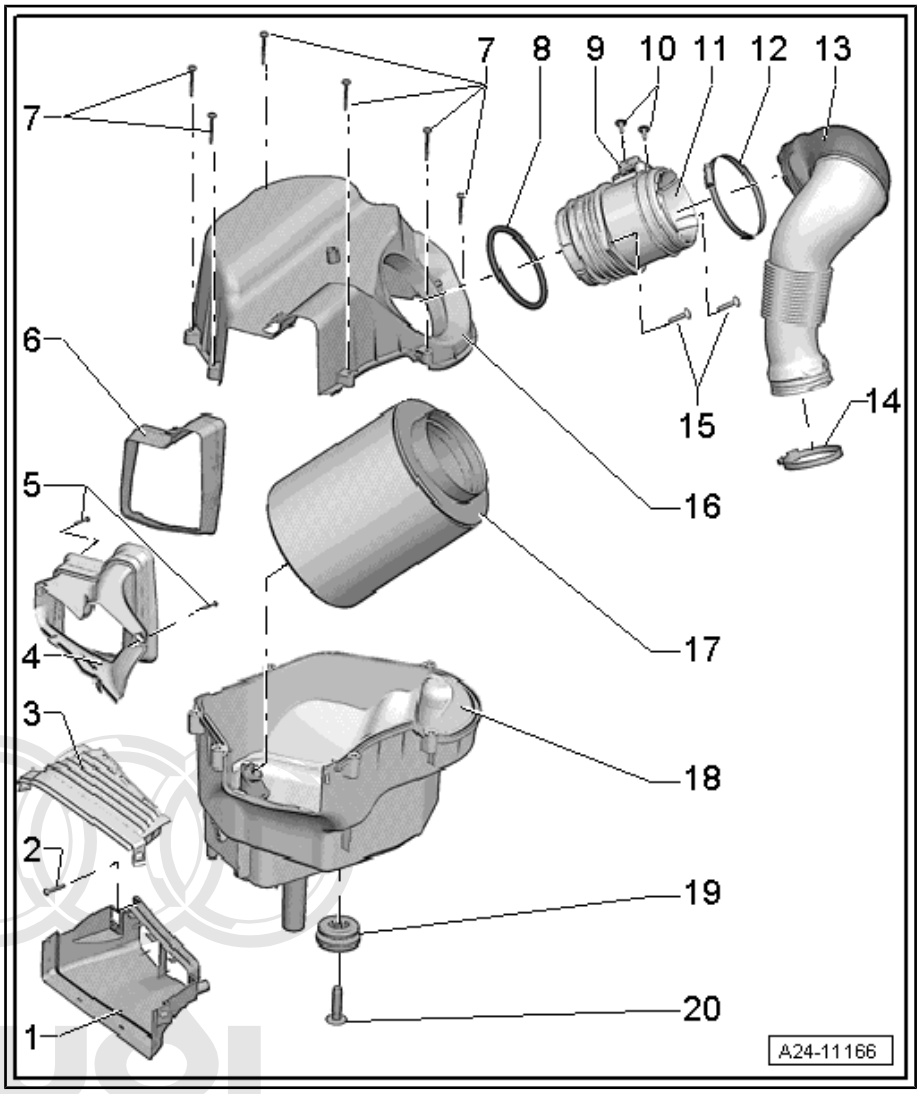

1 - Air duct
- ❑ Clean out salt deposits, dirt and leaves, etc.

2 - Bolt
- ❑ 1.5 Nm

3 - Cover
- ❑ For air duct

4 - Air duct
- ❑ Clean out salt deposits, dirt and leaves, etc.

5 - Bolt
- ❑ 1.5 Nm

6 - Sealing element

7 - Bolts
- ❑ 2.5 Nm

8 - O-ring
- ❑ Renew if damaged

9 - Air mass meter - G70-
- ❑ Removing and installing ⇒ page 279

10 - Bolts
- ❑ 1.5 Nm

11 - Housing for air mass meter - G70-

12 - Screw-type clip
- ❑ Tightening torque ⇒ page 240

13 - Air pipe

14 - Screw-type clip
- ❑ Tightening torque ⇒ page 240

15 - Bolts
- ❑ 1.5 Nm

16 - Air cleaner (top section)
- ❑ Clean out salt deposits and dirt

17 - Air filter element
- ❑ Use genuine air filter element ⇒ Electronic parts catalogue
- ❑ Change intervals ⇒ Maintenance tables
- ❑ Removing and installing ⇒ Maintenance ; Booklet 410

18 - Air cleaner housing
- ❑ Clean out salt deposits, dirt and leaves, etc.

❑ Removing and installing ⇒ page 257

19 - Rubber grommet

20 - Flutter valve for water drain

❑ Clean any leaves and dirt out of water drain

3.2 Removing and installing air cleaner housing

Removing

– Remove lock carrier cover ⇒ General body repairs, exterior; Rep. gr. 63 ; Bumper (front); Removing and installing attachments .

– Remove bolts -1, 3- and detach longitudinal member (top right) -2-.

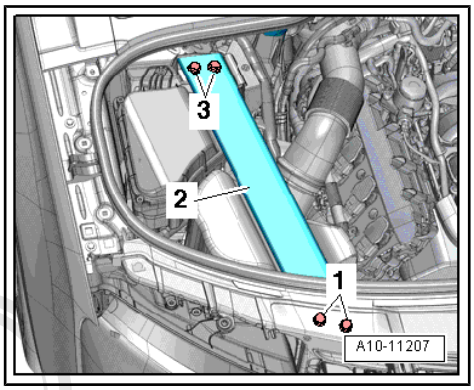

– Remove bolts -arrows- and detach air duct -2-.

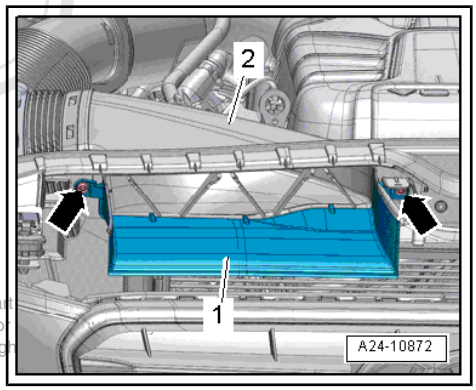

Note

Disregard -item 1-.

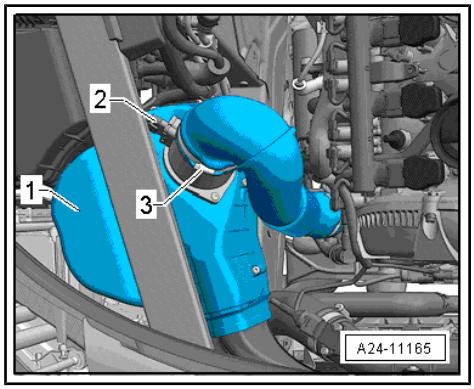

– Unplug electrical connector -2- at air mass meter - G70- .

– Open hose clip -3- at air hose and disconnect air hose at air mass meter - G70- .

– Lift out air cleaner housing -1-.

Installing

To ensure the proper function of the air mass meter - G70- it is important to observe the following instructions.

Note

- *The air cleaner housing MUST be clean.*
- *To prevent malfunctions, cover critical parts of the engine air intake (air mass meter, air pipes, etc.) with a clean cloth when blowing out the air cleaner housing with compressed air.*
- *Hose connections and air pipes and hoses must be free of oil and grease before assembly.*
- *Use a silicone-free lubricant when installing the air hoses.*
- *Secure all hose connections with the correct type of hose clips (same as original equipment) ⇒ Electronic parts catalogue .*

– Check water drain hose in air cleaner (bottom section) for dirt and other obstructions (clean if necessary).

– Clean salt residue, dirt and leaves out of air cleaner housing (top and bottom sections); use a vacuum cleaner if necessary.

– Check for salt residue, dirt and leaves in air hose (engine intake side).

– Check for dirt and leaves in air duct going from lock carrier to air cleaner housing.

– Re-install air cleaner housing.

– Ensure secure fit of air hose at air mass meter - G70- .

The remaining installation steps are carried out in the reverse sequence.

– Install lock carrier cover ⇒ General body repairs, exterior; Rep. gr. 63 ; Bumper (front); Removing and installing attachments .

Tightening torques

- Upper longitudinal member ⇒ General body repairs, exterior; Rep. gr. 50 ; Lock carrier; Exploded view - lock carrier

4 Intake manifold

4.1 Exploded view - intake manifold

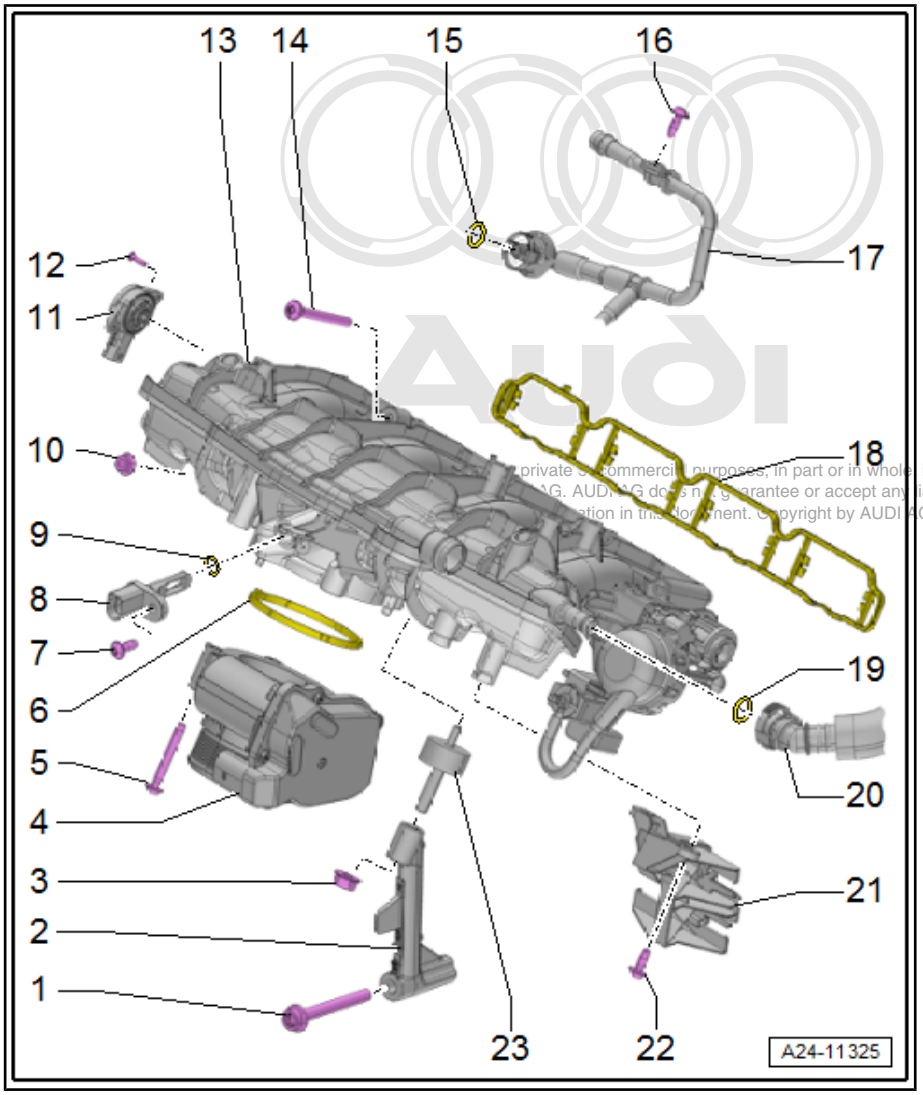

1 - Bolt
- ❑ 20 Nm

2 - Support for intake manifold

3 - Nut
- ❑ 10 Nm

4 - Throttle valve module - J338-
- ❑ Including throttle valve drive for electric throttle - G186- , throttle valve drive angle sender 1 for electric throttle - G187- and throttle valve drive angle sender 2 for electric throttle - G188-
- ❑ Removing and installing ⇒ page 267
- ❑ Cleaning ⇒ page 268
- ❑ After renewing, perform “Adaption” for engine control unit - J623- / throttle valve module - J338- in ⇒ Vehicle diagnostic tester, Guided Functions

5 - Bolt
- ❑ 7 Nm

6 - Seal
- ❑ Renew

7 - Bolt
- ❑ 5 Nm

8 - Intake air temperature sender - G42-
- ❑ Removing and installing ⇒ page 280

9 - O-ring
- ❑ Renew

10 - Nut
- ❑ Pre-tightening torque: 3 Nm
- ❑ Final tightening torque: 10 Nm

11 - Intake manifold flap potentiometer - G336-

- After renewing, perform “Adaption” for engine control unit - J623- / intake manifold flap potentiometer - G336- using ⇒ Vehicle diagnostic tester, `Guided Functions`

12 - Bolt

- Thread-forming
- Fit and screw in bolt by hand so that it is screwed into old thread. Then tighten bolt to torque.
- 0.8 Nm

13 - Intake manifold

- Removing and installing ⇒ page 260
- After installing, perform “Adaption” for engine control unit - J623- / intake manifold flap potentiometer - G336- in ⇒ Vehicle diagnostic tester, `Guided Functions`

14 - Bolt

- Pre-tightening torque: 3 Nm
- Final tightening torque: 10 Nm

15 - O-ring

- Renew

16 - Bolt

- Thread-forming
- Fit and screw in bolt by hand so that it is screwed into old thread. Then tighten bolt to torque.
- 4 Nm

17 - Vacuum hose

18 - Gasket

- Renew

19 - O-ring

- Renew

20 - Hose

- For crankcase breather

21 - Bracket

- For electrical connectors

22 - Bolt

- Thread-forming
- Fit and screw in bolt by hand so that it is screwed into old thread. Then tighten bolt to torque.
- 4 Nm

23 - Bonded rubber mounting

- 10 Nm

4.2 Removing and installing intake manifold

After the fuel rail has been removed or renewed, intake manifold flap potentiometer - G336- must be adapted to engine control unit - J623- . Use ⇒ Vehicle diagnostic tester in “Guided Functions” mode.

Special tools and workshop equipment required

- Oil filter tool - 3417-

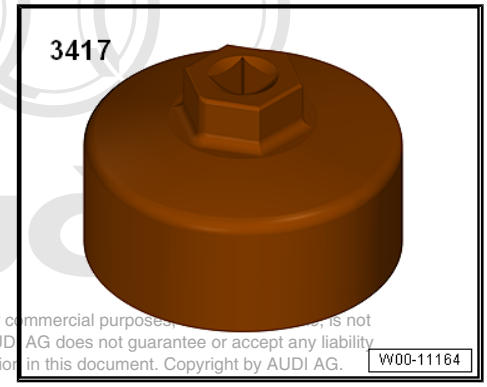

- Hose clip pliers - VAS 6362-

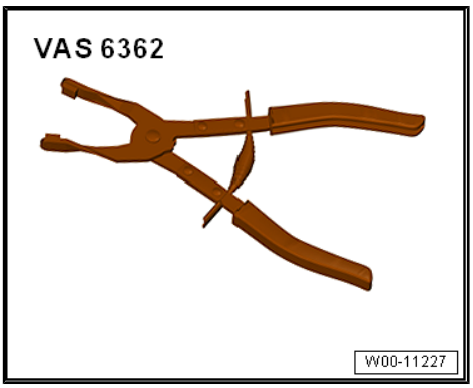

- Assembly tool - T10118-

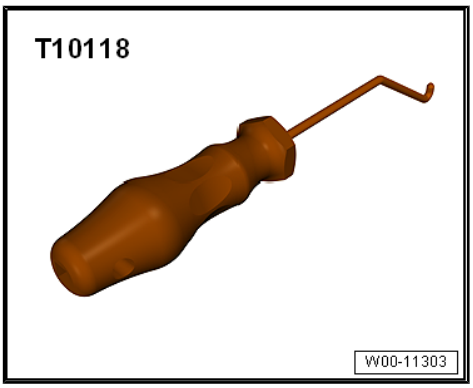

- Socket Torx T30 - T10347-

Safety precautions and repair instructions for vehicles with hybrid drive

DANGER!

Risk of fatal injury if high-voltage components are damaged.

Observe the following when working in the vicinity of high-voltage components or wiring:

- *It is not permitted to use cutting or forming tools, other sharp-edged tools or heat sources such as welding, brazing, soldering, hot air or thermal bonding equipment.*
- *Before starting work, visually inspect the high-voltage components in the areas involved.*
- *Before working in the engine compartment, visually inspect the power and control electronics for electric drive - JX1- , electric drive motor - V141- , air conditioner compressor - V470- and high-voltage wiring.*
- *Before working on the vehicle underbody, visually inspect the high-voltage wiring and covers.*
- *Before working on the rear section of the vehicle, visually inspect the high-voltage wiring and the electro-box with the maintenance connector for high-voltage system - TW - .*
- *Visually inspect all potential equalisation lines.*

Check the following when making the visual inspection:

- *There must be no external damage on any component.*
- *The insulation of the high-voltage wiring and potential equalisation lines must not be damaged.*
- *There must be no unusual deformation of the high-voltage wiring.*
- *All high-voltage components must be identified by a red warning sticker.*

WARNING

Working on vehicles with high-voltage wiring:

- *Do not support yourself or tools on high-voltage wiring or associated components --> this can damage the insulation.*
- *High-voltage wiring must not be excessively bent or kinked --> this can damage the insulation.*
- *The round high-voltage connectors are colour-coded with an external coloured ring and are provided with mechanical coding or guide lugs. It is important to observe this coding when joining up the round high-voltage connectors, otherwise the connectors can be damaged.*

Removing

Note

- *In order to reach the injectors, first remove the intake manifold with the fuel rail.*
- *The combustion chamber ring seal (teflon) and the O-ring must be renewed.*

WARNING

The fuel system is pressurised. The fuel pressure in the high-pressure part of the injection system must be reduced to a residual pressure prior to opening; for procedure see ⇒ page 252 .

– Remove engine cover panel ⇒ page 54 .

– Disconnect vacuum line -arrow- leading to activated charcoal filter.

– Unplug following electrical connectors:

1 - Activated charcoal filter solenoid valve 1 - N80-

2 - From knock sensor 1 - G61-

3 - From intake manifold flap valve - N316- , fuel pressure sender - G247- and Hall sender - G40-

4 - From injectors

5 - Throttle valve module - J338-

6 - Intake air temperature sender - G42-

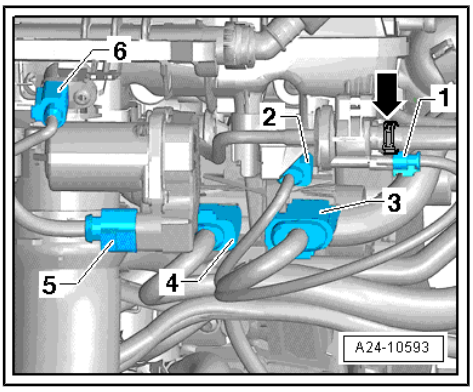

Unplug electrical connector -1- at Hall sender - G40- .

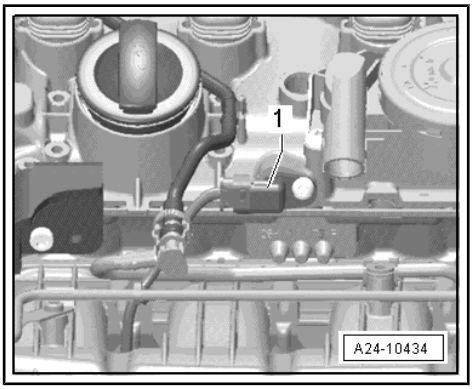

– Release hose clips -arrows- and remove air hose.

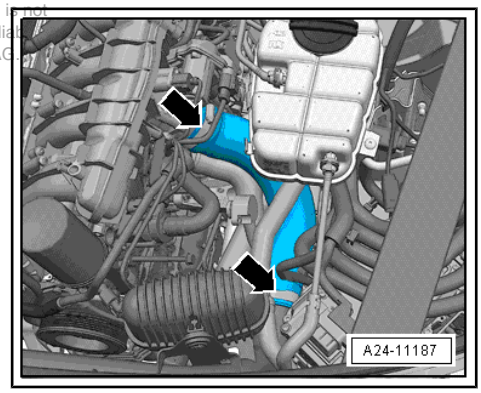

– Disconnect vacuum line -1- at connection -2-.
– Remove crankcase breather hose -3-.
– Remove bolt -4- from bracket for pressure sensor for activated charcoal system - G804- and move bracket to side.

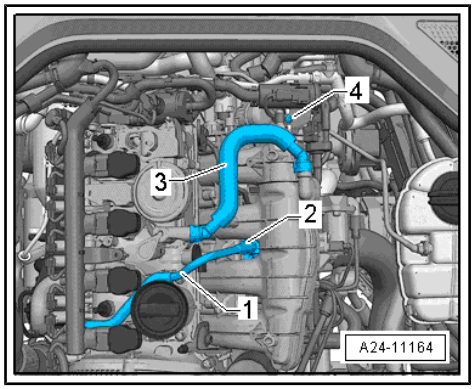

– Release spring-type clip -top arrow- and detach fuel supply hose from high-pressure pump.
– Unscrew union nut for high-pressure fuel pipe -bottom arrow- at high-pressure pump.

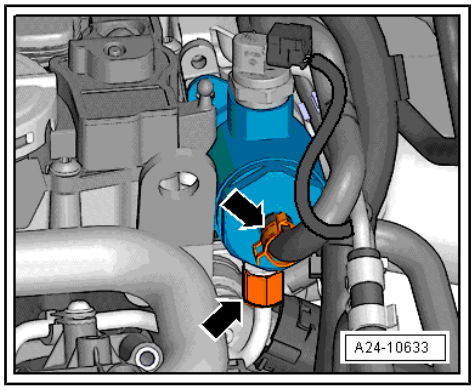

Note

- *The fuel system must not be under pressure.*
- *Use a clean cloth to catch escaping fuel.*
- *Seal off open connections with clean caps. It is essential to ensure that no dirt enters the fuel system.*

– Disconnect vacuum line -arrow- at intake manifold flap valve - N316- .

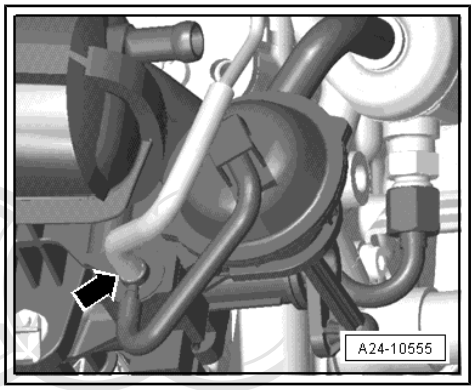

– Remove bolts -1 and 2- for coolant line.

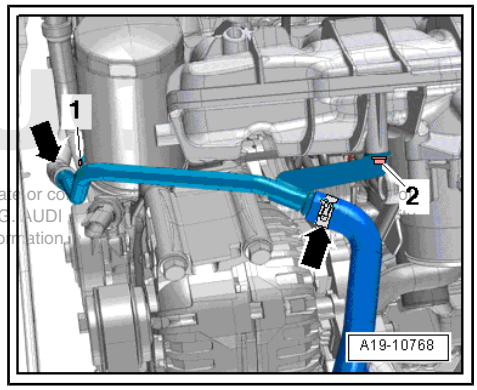

– Remove continued coolant circulation pump - V51- -2-.

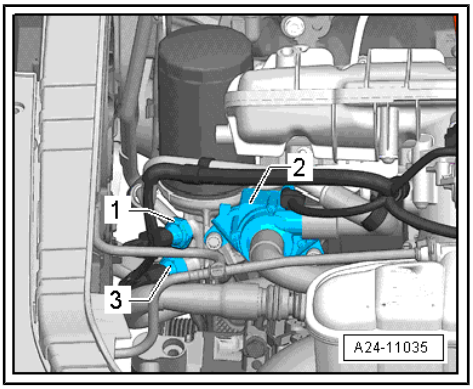

– Unplug electrical connector at fuel pressure sender - G247- -1-.

– Remove electrically driven air conditioner compressor from bracket ⇒ Heating, air conditioning; Rep. gr. 87 ; Air conditioner compressor; Detaching and attaching air conditioner compressor at bracket .

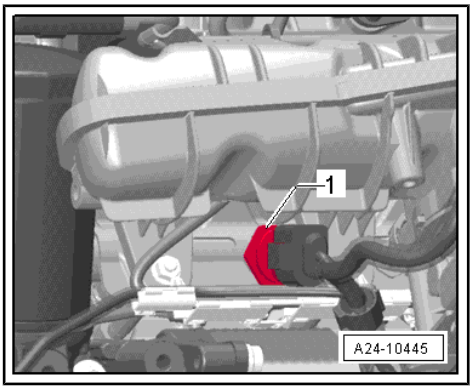

– Slightly loosen securing nut -1- and remove bolt -2-.

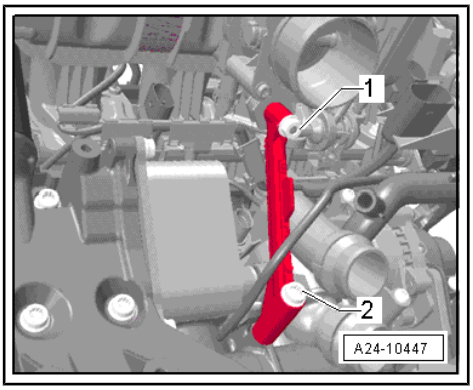

– Loosen oil filter with oil filter tool - 3417- and remove oil filter.

– Unscrew bolts from intake manifold using socket Torx T30 - T10347- .

Note

To remove the bolts that cannot be accessed if you do not have socket Torx T30 - T10347- , the throttle valve module - J338- must be removed.

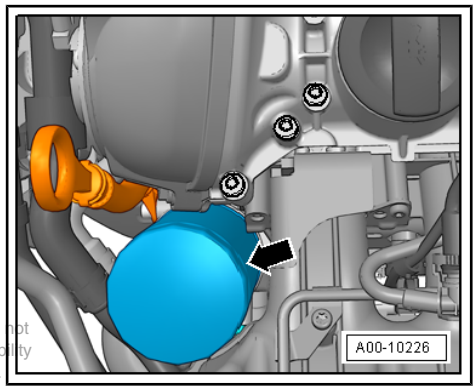

– Carefully pull intake manifold and fuel rail slightly away from cylinder head.

– Unplug electrical connector -1- from intake manifold flap potentiometer - G336- and then detach intake manifold.

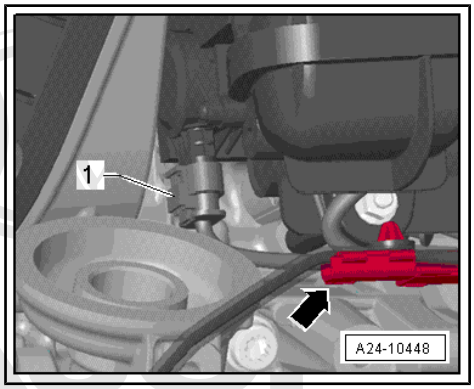

Note

- *The injectors can remain in the fuel rail.*
- *Block off intake ports with a clean cloth.*

– Disconnect intake manifold from fuel rail ⇒ page 272 .

Installing

Note

Make sure that injectors are installed correctly.

– Fit intake manifold onto studs (left and right) on cylinder head.

– Remaining installation steps are carried out in reverse sequence; note the following:

– Install engine cover panel ⇒ page 54 .

Tightening torques

- ⇒ “4.1 Exploded view - intake manifold”, page 259
- ⇒ “5.1 Exploded view - fuel rail with injectors”, page 271

4.3 Removing and installing throttle valve module - J338-

Safety precautions and repair instructions for vehicles with hybrid drive

DANGER!

Risk of fatal injury if high-voltage components are damaged.

Observe the following when working in the vicinity of high-voltage components or wiring:

- *It is not permitted to use cutting or forming tools, other sharp-edged tools or heat sources such as welding, brazing, soldering, hot air or thermal bonding equipment.*
- *Before starting work, visually inspect the high-voltage components in the areas involved.*
- *Before working in the engine compartment, visually inspect the power and control electronics for electric drive - JX1- , electric drive motor - V141- , air conditioner compressor - V470- and high-voltage wiring.*
- *Before working on the vehicle underbody, visually inspect the high-voltage wiring and covers.*
- *Before working on the rear section of the vehicle, visually inspect the high-voltage wiring and the electro-box with the maintenance connector for high-voltage system - TW - .*
- *Visually inspect all potential equalisation lines.*

Check the following when making the visual inspection:

- *There must be no external damage on any component.*
- *The insulation of the high-voltage wiring and potential equalisation lines must not be damaged.*
- *There must be no unusual deformation of the high-voltage wiring.*
- *All high-voltage components must be identified by a red warning sticker.*

WARNING

Working on vehicles with high-voltage wiring:

- *Do not support yourself or tools on high-voltage wiring or associated components --> this can damage the insulation.*
- *High-voltage wiring must not be excessively bent or kinked --> this can damage the insulation.*
- *The round high-voltage connectors are colour-coded with an external coloured ring and are provided with mechanical coding or guide lugs. It is important to observe this coding when joining up the round high-voltage connectors, otherwise the connectors can be damaged.*

Removing

– Remove engine cover panel ⇒ page 54 .

– Open hose clip -arrow- securing air hose and disconnect hose downwards from throttle valve module - J338- .

– Unplug electrical connector -1- from throttle valve module - J338- .

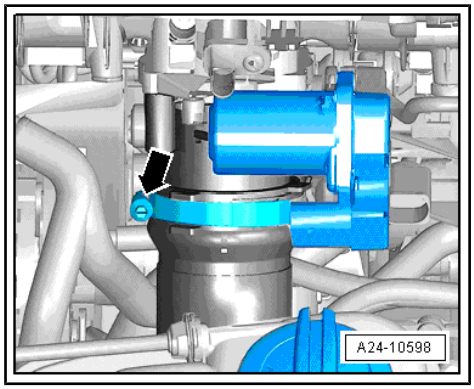

– Remove the four bolts -arrows- from throttle valve module - J338- and detach throttle valve module - J338- .

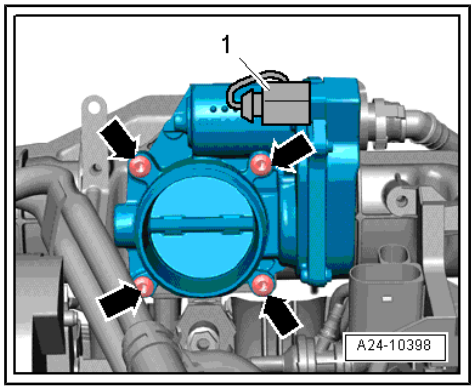

Installing

– Install in reverse order.

– Clean sealing surface for seal.

– Renew seal.

– After throttle valve module - J338- has been renewed, it must be re-adapted to engine control unit - J623- using ⇒ Vehicle diagnostic tester.

Tightening torques

♦ ⇒ “4.1 Exploded view - intake manifold”, page 259

4.4 Cleaning throttle valve module

Note

♦ *The throttle valve module must be adapted if a new engine control unit - J623- is installed.*

♦ *Take care not to scratch the throttle valve housing when cleaning it.*

– Remove throttle valve module - J338- ⇒ page 267 .

– Open throttle valve by hand and block it in the open position with a suitable object (e.g. plastic or wooden wedge) -arrow-.

WARNING

Acetone is highly flammable. Please observe all accident prevention regulations and safety precautions when handling flammable liquids. Do not use compressed air when cleaning the throttle valve. Wear safety goggles and protective clothing to avoid possible injury and skin contact.

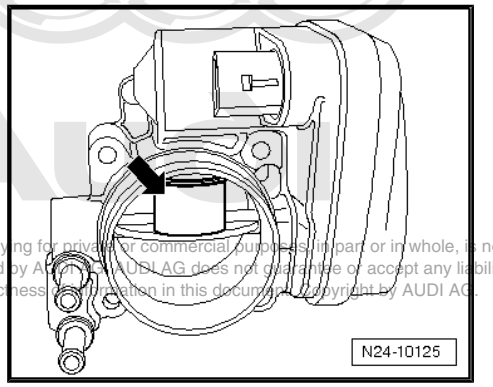

– Clean throttle valve housing thoroughly, especially around the points -arrows- where the throttle valve closes, using commercially available acetone and a small brush.

– Wipe out throttle valve housing with a lint-free cloth.

– Allow acetone to evaporate completely and re-install throttle valve module after cleaning.

– After installing throttle valve module, perform “Adaption” for engine control unit - J623- / throttle valve module - J338- in ⇒ Vehicle diagnostic tester, Guided Functions.

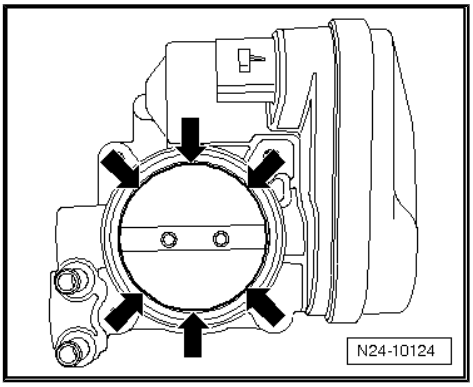

4.5 Checking intake manifold change-over function

Only perform this test if there is a loss of engine torque (poor flexibility or lack of pulling power).

Special tools and workshop equipment required

♦ Hand vacuum pump - VAS 6213-

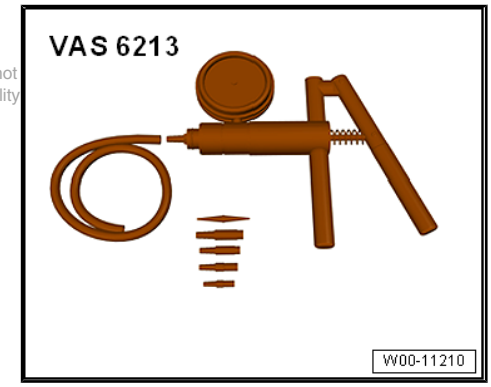

Test condition:

♦ Intake manifold flap valve - N316- has been checked with ⇒ Vehicle diagnostic tester.

Perform the following steps if the intake manifold flap valve - N316- is OK.

– Remove engine cover panel ⇒ page 54 .

– Start engine and run at idling speed.

– Have a second mechanic rev up engine quickly (short burst of throttle) and observe vacuum unit for intake manifold change-over.

• The vacuum unit should pick up -arrow-.

If the change-over does not operate as described:

– Check vacuum system for leaks.

– Check that change-over mechanism moves freely by operating linkage manually.

– Check proper connection of vacuum lines.

– Check vacuum hoses for porosity.

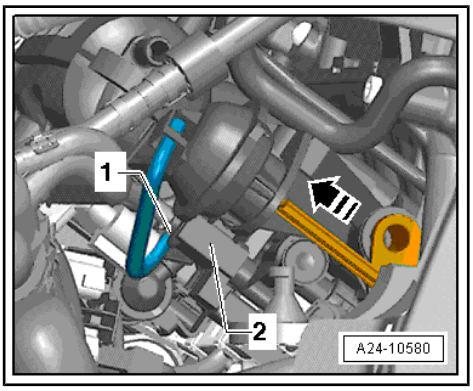

– Detach vacuum hose -1- from intake manifold flap valve - N316- -2-.

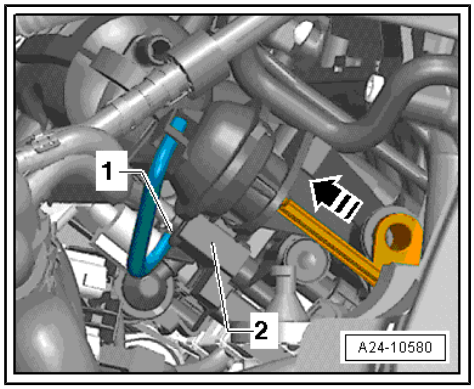

– Move adjuster ring -1- on hand vacuum pump - VAS 6213- to position -A- to select "vacuum".

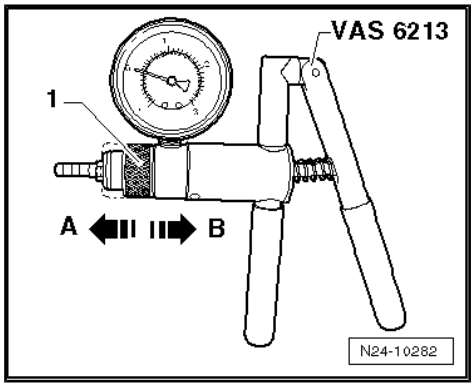

– Connect hand vacuum pump - VAS 6213- to vacuum unit for intake manifold flap valve - N316- .

– Operate the hand vacuum pump - VAS 6213- several times.

The vacuum unit should move -arrows-.

– If vacuum unit does not move, renew vacuum unit.

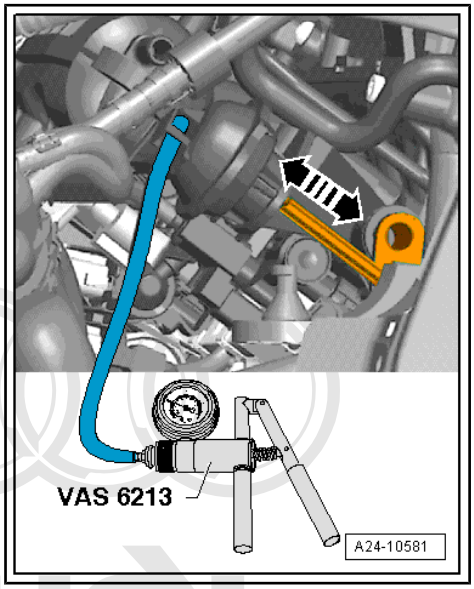

5 Injectors

5.1 Exploded view - fuel rail with injectors

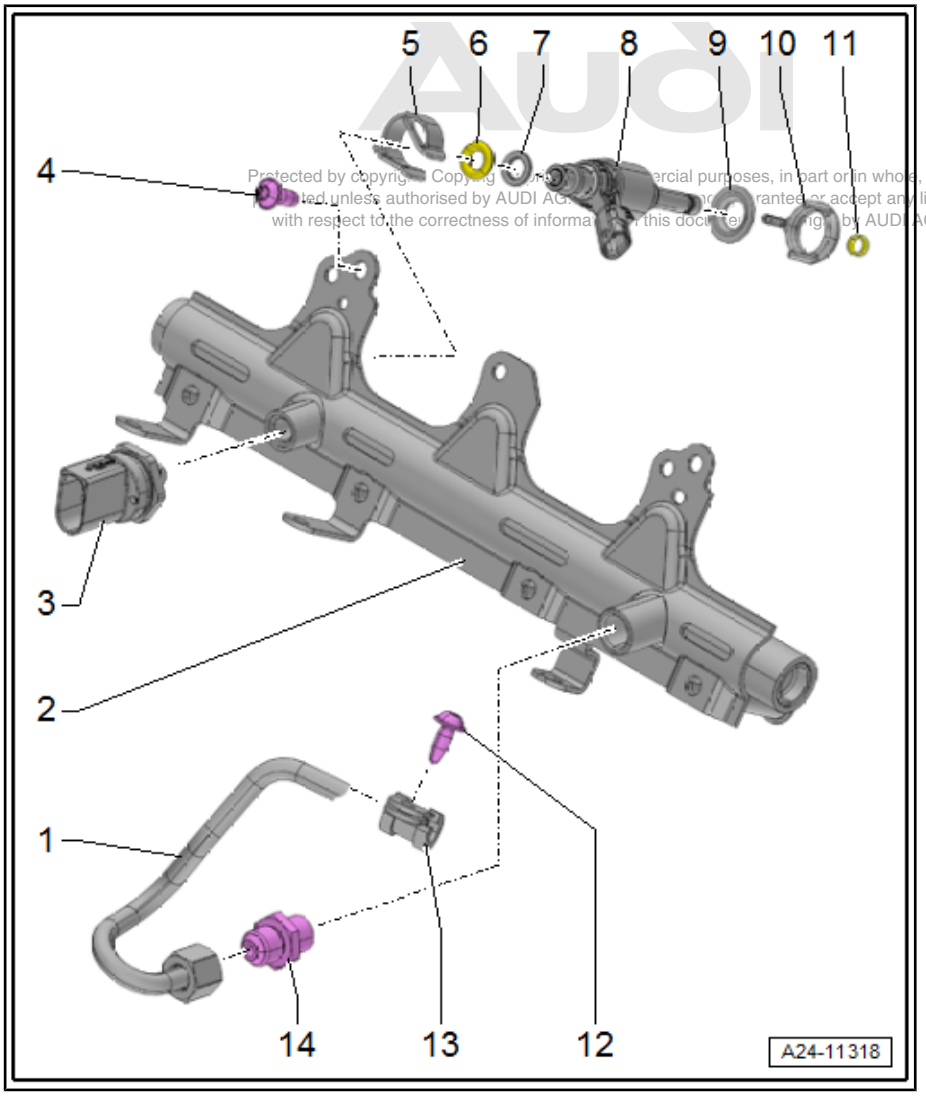

1 - High-pressure pipe

> ⚠ **WARNING**
> *The fuel system operates at extremely high pressure. This can cause injury.*
> *The fuel pressure in the high-pressure section of the injection system must be reduced to a residual pressure prior to opening the system ⇒ page 252 .*

- ❑ Connections must not be damaged
- ❑ Do not alter shape
- ❑ Lubricate thread of union nut with clean engine oil
- ❑ Tighten union nut to 27 Nm

2 - Fuel rail

> ⚠ **WARNING**
> *The fuel system operates at extremely high pressure. This can cause injury.*
> *The fuel pressure in the high-pressure section of the injection system must be reduced to a residual pressure prior to opening the system ⇒ page 252 .*

- ❑ Connections must not be damaged
- ❑ Removing and installing ⇒ page 272

3 - Fuel pressure sender - G247-

- ❑ Removing and installing ⇒ page 280
- ❑ Lubricate threads lightly with clean engine oil
- ❑ 27 Nm

4 - Bolt

- ❑ 5 Nm

5 - Support ring

- ❑ Make sure it is correctly seated

- ❑ Via this support ring, the fuel rail exerts the force which holds the injector in the cylinder head

6 - O-ring

- ❑ Renew
- ❑ Lubricate lightly with clean engine oil

7 - Spacer ring

- ❑ Renew if damaged

8 - Injector

- ❑ Different versions available; for allocation refer to ⇒ Electronic parts catalogue
- ❑ Ensure correct installation position.
- ❑ Removing and installing ⇒ page 273

9 - Sealing element

10 - Retainer

- ❑ For sealing element

11 - Combustion chamber ring seal

- ❑ Renewing ⇒ "5.3 Removing and installing injectors", page 273

12 - Bolt

- ❑ Thread-forming
- ❑ Fit and screw in bolt by hand so that it is screwed into old thread. Then tighten bolt to torque.
- ❑ 5 Nm

13 - Retaining clamp

- ❑ For high-pressure pipe

14 - Connecting piece

- ❑ For high-pressure pipe
- ❑ Counterhold when loosening union nut
- ❑ Renew after removing
- ❑ 40 Nm

5.2 Removing and installing fuel rail

Removing

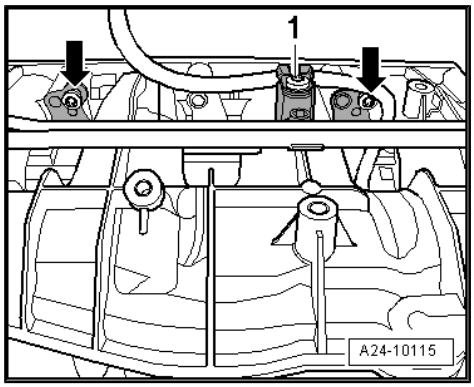

- Remove intake manifold ⇒ page 260 .
- Release hose clip -1-.
- Remove hoses from activated charcoal filter.
- Disconnect fuel line at fuel rail.
- Unscrew two bolts -arrows- on fuel rail.
- Detach fuel rail from intake manifold.

Installing

- Always renew both connecting pieces for fuel supply line.
- Connect and tighten fuel line.
- Re-connect electrical connector.
- Install intake manifold ⇒ page 260 .

Tightening torques

- ♦ ⇒ "4.1 Exploded view - intake manifold", page 259
- ♦ ⇒ "5.1 Exploded view - fuel rail with injectors", page 271

5.3 Removing and installing injectors

Special tools and workshop equipment required

- Tool set for FSI engines - T10133 C-

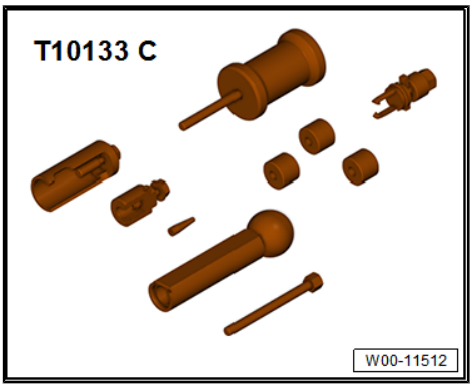

Note

Special tool T10133/2 (puller) has been modified and now has the designation puller T10133/2 A . If you have not yet received the new tool you can make the modification yourself.

Modifying puller T10133/2 to make it equivalent to puller T10133/2 A

Special tools and workshop equipment required

- Round file, approx. 6 mm

– File out a semi-circular recess as shown in the illustration. The recess allows the tool to be pushed further onto the injector so the contact surface is increased.

– For identification purposes, mark the modified tool with the letter “A” after the tool number.

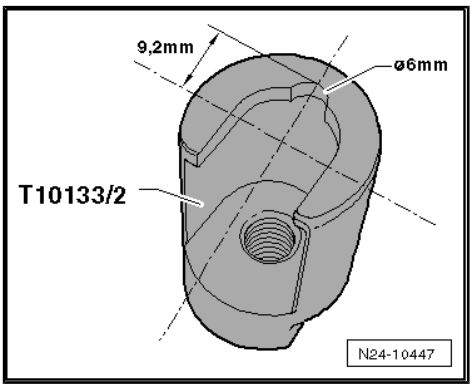

Removing

– Remove intake manifold and fuel rail ⇒ page 260 .

Note

Carefully pull out any injectors that remain lodged in the fuel rail.

Remove the injectors if they remain lodged in the cylinder head.

Note

Injectors must only be installed when the engine is cold.

– Cover open inlet ports with a clean cloth.

– Unplug electrical connector at injector that is to be removed.

– Slide stop sleeve -T10133/18- over injector.

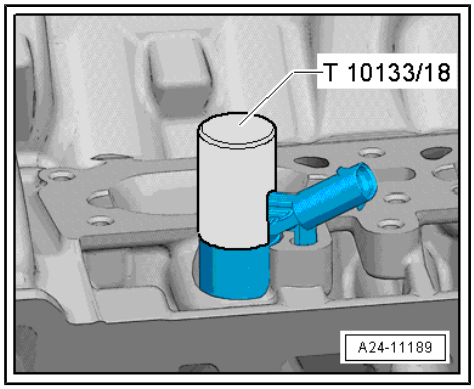

– Carefully knock against stop sleeve several times to loosen injector.

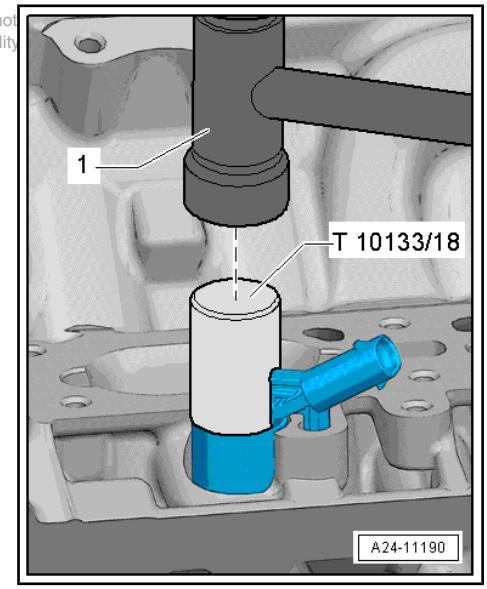

Note

- *Use a torque wrench to pull out injector.*
- *Adjust torque wrench to 5 Nm.*

– Guide puller -T10133/2A- into groove on injector.

– Then apply puller T10133/16A .

– Pull out injector by turning bolt with torque wrench -1-.

– If injector does not come loose after limit torque of 5 Nm is reached, remove puller and repeat procedure using stop sleeve to loosen injector.

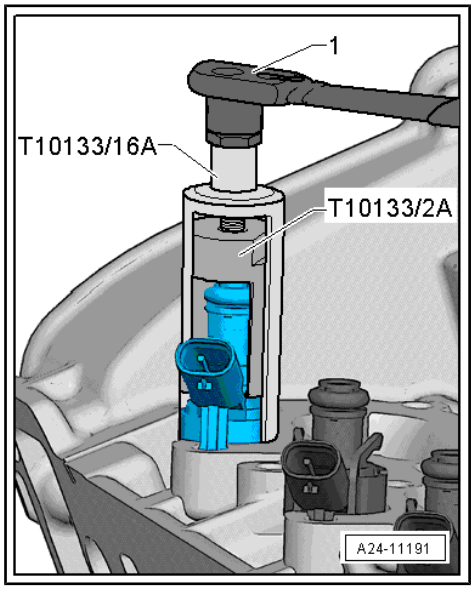

Note

- *Observe correct torque to avoid irreparable damage to injector.*
- *The combustion chamber ring seal must always be renewed prior to reinstalling the injector.*

Dismantling injector

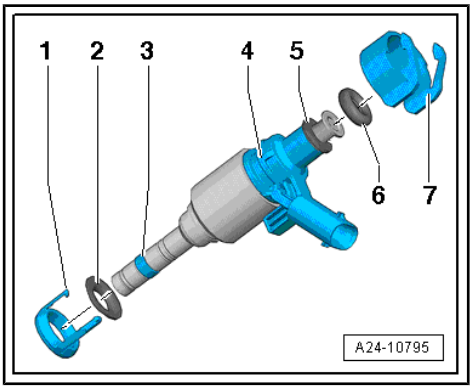

- Pull O-ring -6- and spacer ring -5- off injector -4-.
- Unclip sealing element -1-.
- Carefully remove old combustion chamber ring seal -3-. To do so, cut open combustion chamber ring seal using knife or prise open with small screwdriver and then pull off forwards.

Note

Take care not to damage groove on injector. The injector must be renewed if the groove is damaged.

Installing

Note

- *Renew sealing element, combustion chamber ring seal and O-ring.*
- *Renew spacer ring if damaged.*
- *Lubricate O-rings of injectors lightly with clean engine oil.*

- Before new combustion chamber ring seal is fitted, any combustion residue must be removed from ring groove and injector stem using a clean cloth.

- Fit assembly cone -T10133/5- with new combustion chamber ring seal -1- onto injector -2-.

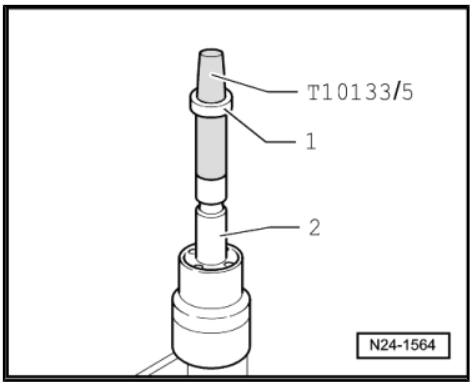

- Using assembly sleeve -T10133/6- , push combustion chamber ring seal onto assembly cone -T10133/5- as far as it will go.

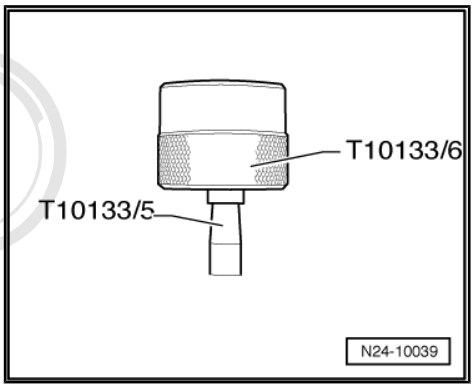

– Turn assembly sleeve - T10133/6- upside down and push combustion chamber ring seal to end of assembly cone - T10133/5- .

– Remove assembly cone - T10133/5- and push combustion chamber ring seal into sealing ring groove using assembly sleeve - T10133/6- .

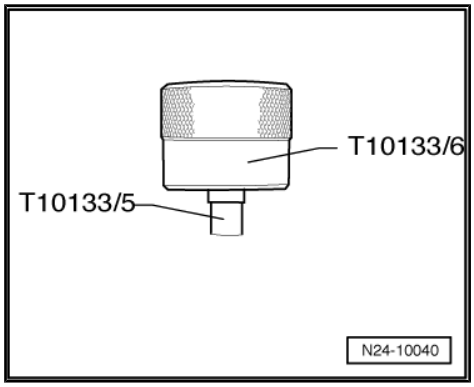

– Push calibration sleeve -T10133/7- onto injector as far as it will go and simultaneously turn it slightly (approx. 180°).

– Pull calibration sleeve -T10133/7- off again by turning it in the opposite direction.

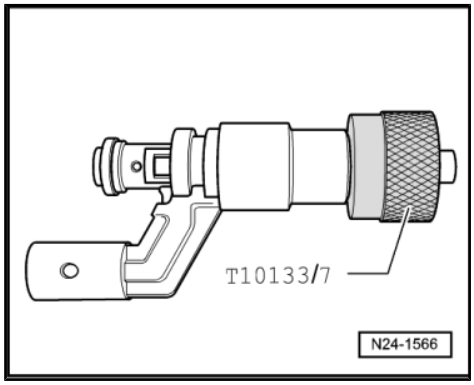

– Push calibration sleeve -T10133/8- onto injector as far as it will go and simultaneously turn it slightly (approx. 180°).

– Pull calibration sleeve -T10133/8- off again by turning it in the opposite direction.

– Fully assemble injector using parts from repair kit.

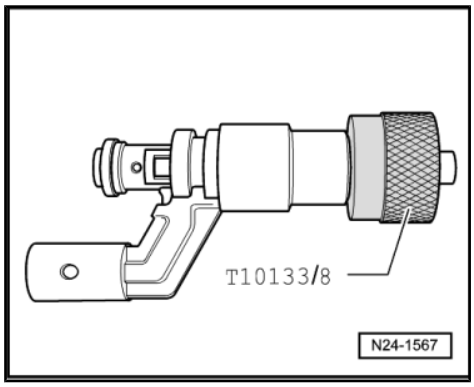

Note

- *The combustion chamber ring seal on the injector must not be oiled or greased.*
- *Make sure that there is no cleaning fluid or oil in the holes in the cylinder head when installing the injectors.*

– Before installing injectors, thoroughly clean apertures for injectors in cylinder head using supplied nylon brush - T10133/4- .

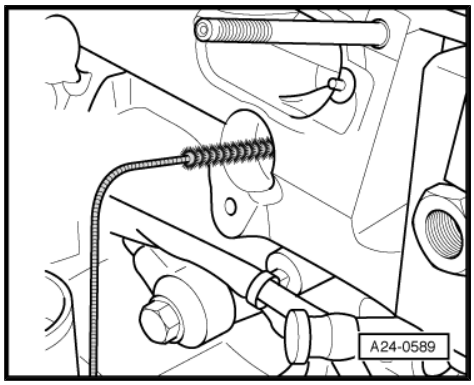

– Press injector by hand as far as it will go into aperture in cylinder head (aperture must be free of oil and grease). Ensure that the injector is properly seated -arrow- in the cylinder head.

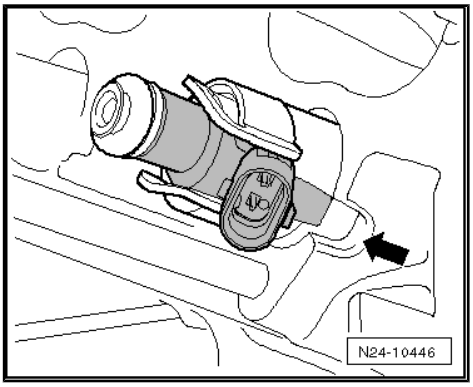

Note

If the injector cannot be pushed in by hand, use puller - T10133/2A- -2- with striker - T10133/3- to insert the injector.

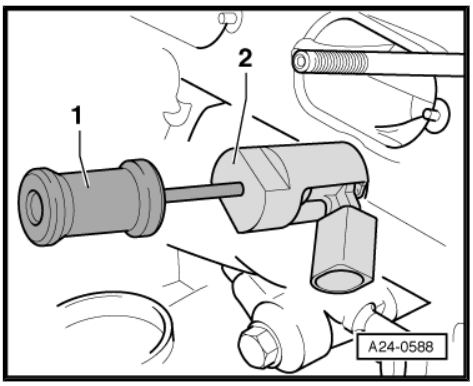

– Fit support ring onto injector.
– Lightly lubricate O-rings for injectors with clean engine oil.
– Position fuel rail on injectors and press into place evenly.
– Install intake manifold with fuel rail ⇒ page 260 .

5.4 Cleaning injectors

Special tools and workshop equipment required

- Ultrasonic cleaning unit - VAS 6418-
- Mounting plate for injection modules - VAS 6418/1-
- Cleaning fluid ⇒ Electronic parts catalogue

Cleaning

– Remove injectors ⇒ page 273 .

Note

Observe safety precautions and operating instructions for ultrasonic unit.

– Ultrasonic unit must be filled with cleaning fluid.

Note

Ultrasonic unit must be filled with cleaning fluid up to top edge of apertures (see detail in illustration).

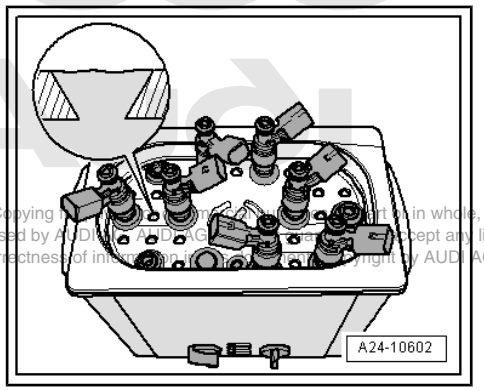

– Insert injectors -1- all the way into mounting plate for injection modules - VAS 6418/1- -2-.
– Set rotary knob -4- to a temperature of 50°C.
– Select a cleaning time of 30 minutes with rotary knob -5-.
– Switch on ultrasonic unit with button -3-.

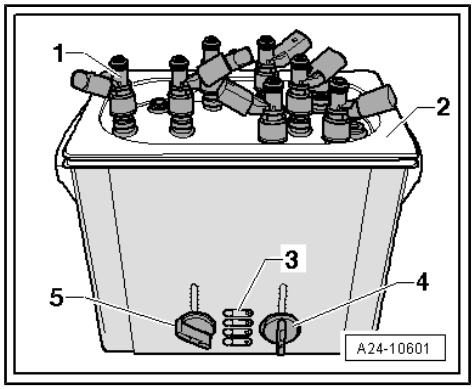

Note

The time set starts to elapse as soon as a cleaning temperature of 50°C has been reached.

– Install injectors with new combustion chamber seal ⇒ page 273 .

6 Senders and sensors

6.1 Removing and installing air mass meter

Removing

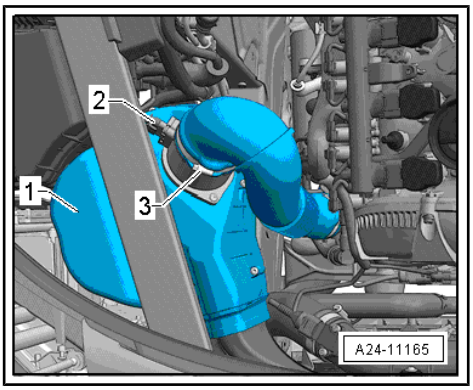

– Unplug electrical connector -2- at air mass meter - G70- .
– Open hose clip -3- at air hose and disconnect air hose at air mass meter - G70- .
– Unscrew both bolts from air mass meter - G70- .
– Then carefully pull air mass meter - G70- out of guide on air cleaner housing.

Installing

To ensure that the air mass meter -G70- functions properly, it is important to observe the following notes and instructions.

Note

- *If the air filter element is very dirty or wet, dirt or water could reach the air mass meter - G70- and affect the air mass value. This would lead to loss of power, since a smaller injection quantity is calculated.*
- *Always use genuine part for air filter element.*
- *Use a silicone-free lubricant when installing the air hoses.*
- *Secure all hose connections with the correct type of hose clips (same as original equipment) ⇒ Electronic parts catalogue .*

– Check for salt residue, dirt and leaves in air mass meter and air intake hose (engine intake side).
– Check for dirt in air duct leading to air filter element. If necessary, clean salt residue, dirt and leaves out of air cleaner housing (top and bottom sections); wash out or use a vacuum cleaner as required. Removing and installing air cleaner ⇒ Maintenance ; Booklet 410 .

The remaining installation steps are carried out in the reverse sequence.

6.2 Removing and installing intake air temperature sender - G42-

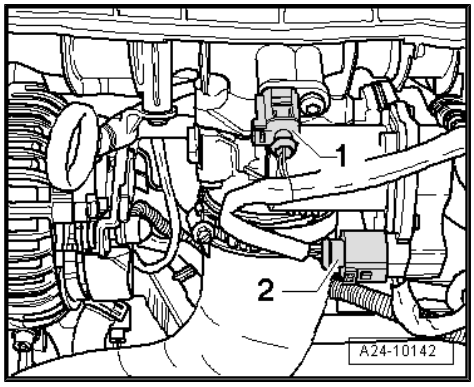

Removing

– Remove engine cover panel ⇒ page 54 .

– Unplug electrical connector -1-.

– Unscrew bolt and detach intake air temperature sender - G42- .

Note

♦ *Installation position varies depending on engine version*

♦ *Disregard -item 2-.*

Installing

– Installation is carried out in the reverse order; note the following:

– Install engine cover panel ⇒ page 54 .

Tightening torques

♦ ⇒ “4.1 Exploded view - intake manifold”, page 259

6.3 Removing and installing fuel pressure sender - G247-

If the fuel pressure sender - G247- fails, the fuel metering valve - N290- is switched off, the electric fuel pump is activated fully and the engine is operated with the fuel pressure which remains. This will reduce engine torque considerably.

Special tools and workshop equipment required

♦ Assembly tool - T10118-

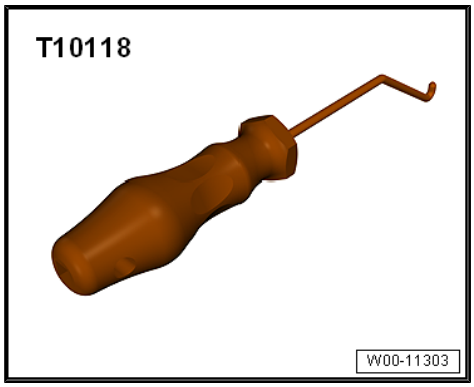

♦ Socket (27 mm) - T40218- or commercially available socket (27 mm)

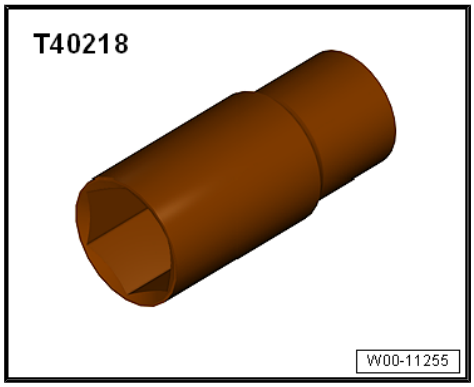

Removing

– Remove engine cover panel ⇒ page 54 .

> **WARNING**
>
> *The fuel system is pressurised. The fuel pressure in the high-pressure part of the injection system must be reduced to a residual pressure prior to opening; for procedure see ⇒ page 252 .*

– Remove bolts -1 and 2- for coolant line.

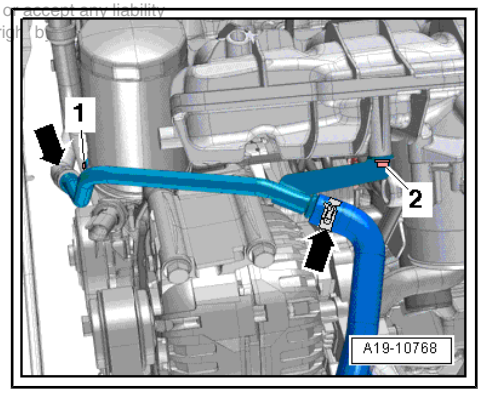

– Release connector on fuel pressure sender - G247- using assembly tool - T10118- .

– Unscrew fuel pressure sender - G247- using socket (27 mm) - T40218- .

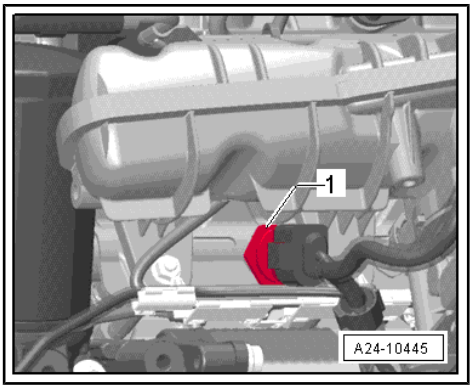

Installing

– Install in reverse order.

– Make sure that connecting piece is tightened to specified torque before installing fuel pressure sender - G247- .

Tightening torques

♦ ⇒ “5.1 Exploded view - fuel rail with injectors”, page 271

6.4 Checking fuel pressure sender - G247-

Special tools and workshop equipment required

♦ Test instrument adapter - VAS 5570-

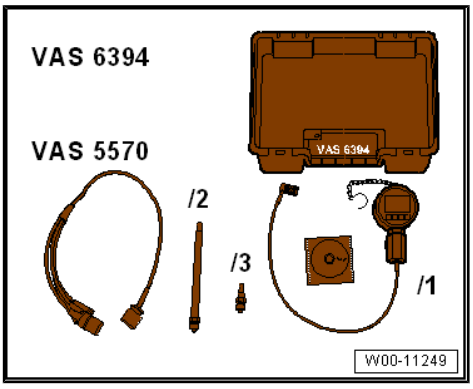

♦ Pressure sensor tester - VAS 6394-

♦ Adapter - VAS 6394/2-

♦ Torque wrench - V.A.G 1331-

♦ Vehicle diagnostic tester

Procedure

– Remove engine cover panel ⇒ page 54 .

> ⚠ **WARNING**
>
> *The fuel system is pressurised. The fuel pressure in the high-pressure part of the injection system must be reduced to a residual pressure prior to opening; for procedure see ⇒ page 252 .*

– Remove fuel pressure sender - G247- ⇒ page 280 .

– Screw in adapter - VAS 6394/2- in place of fuel pressure sender - G247- and tighten adapter with the same torque as that specified for fuel pressure sender - G247- .

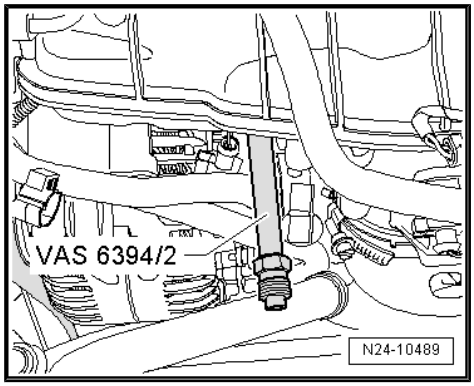

– Unscrew plug -2- on pressure sensor tester - VAS 6394/1- and screw in the removed fuel pressure sender - G247- . Tighten to torque normally specified for fuel pressure sender.

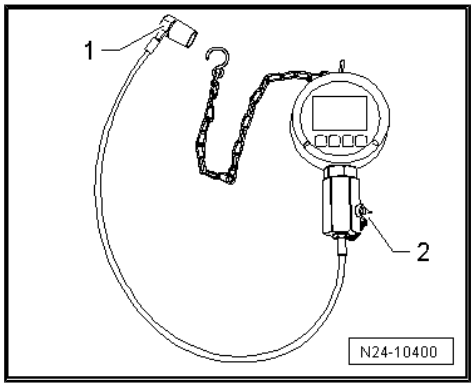

– Use test instrument adapter - VAS 5570- to make electrical connection between vehicle and fuel pressure sender - G247- .

– Connect a ⇒ Vehicle diagnostic tester.

– Switch on ignition.

– Select “Engine electronics” in vehicle self-diagnosis.

– Then select “Measured values”.

– Select “Fuel pressure” from the list.

The actual pressure value being transmitted to the engine control unit by the fuel pressure sender - G247- is displayed.

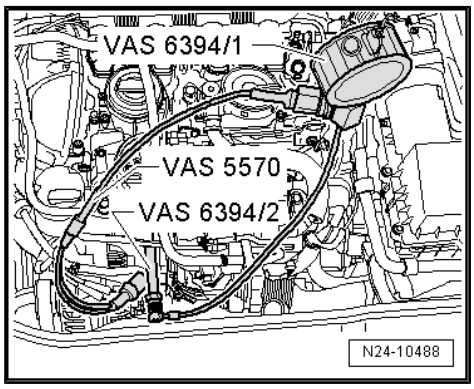

– Switch on pressure sensor tester - VAS 6394/1- by pressing button -A- once briefly.

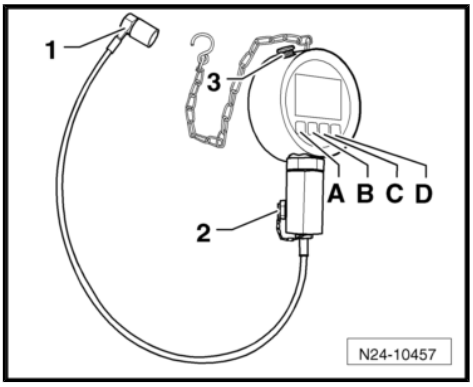

Note

You can press and hold button -A- for 2 seconds to switch on the illumination for 20 seconds.

Pressure sensor tester - VAS 6394/1- should indicate 0 bar. If this is not the case, press button -C- once briefly to zero the tester.

– Connect pressure line of pressure sensor tester - VAS 6394/1- to adapter - VAS 6394/2- .

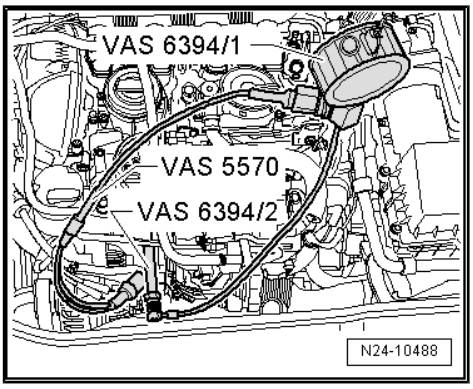

– Start engine.

– Compare the pressure indicated by the pressure sensor tester - VAS 6394/1- with the actual pressure value on the vehicle diagnostic tester.

• The pressure readings must not deviate by more than 5 bar.

– If the deviation is more than 5 bar, test a new fuel pressure sender - G247- .

WARNING

The fuel system is pressurised. The fuel pressure in the high-pressure part of the injection system must be reduced to a residual pressure prior to opening; for procedure see ⇒ page 252 .

– Screw a new fuel pressure sender - G247- into the pressure gauge - VAS 6394/1- .

– Repeat the test with the new fuel pressure sender - G247- and compare the two pressure values.

If the two values still do not agree:

– Check the electrical connection between the fuel pressure sender - G247- and the engine control unit; refer to ⇒ Current flow diagrams, Electrical fault finding and Fitting locations.

If the values agree:

– Install the new fuel pressure sender - G247- ⇒ page 280 .

Tightening torques

• ⇒ “5.1 Exploded view - fuel rail with injectors”, page 271

7 High-pressure pump

⇒ "7.1 Exploded view - high-pressure pump", page 284

⇒ "7.2 Removing and installing high-pressure pump", page 285

7.1 Exploded view - high-pressure pump

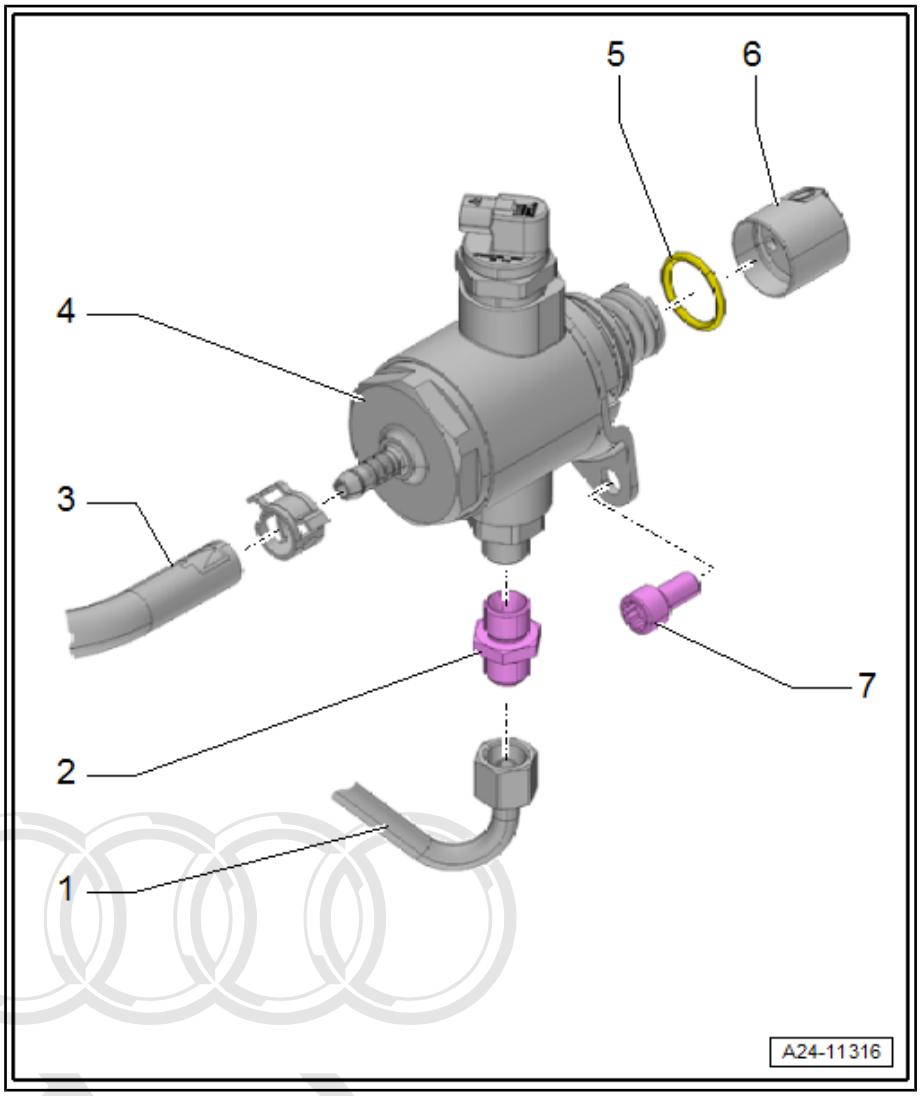

1 - High-pressure pipe

- ❑ Do not alter shape
- ❑ Install so that parts are free of tension
- ❑ Lubricate thread of union nut with clean engine oil
- ❑ Tighten union nut to 27 Nm

2 - Connecting piece

- ❑ For high-pressure pipe
- ❑ Counterhold when loosening union nut
- ❑ Renew after removing
- ❑ 40 Nm

3 - Fuel supply hose

- ❑ From fuel tank

4 - High-pressure pump

- ❑ With fuel metering valve - N290- (do not unfasten)

> ⚠ **WARNING**
>
> *The fuel system operates at extremely high pressure. This can cause injury.*
> *The fuel pressure in the high-pressure section of the injection system must be reduced to a residual pressure prior to opening the system ⇒ page 252 .*

- ❑ Observe rules for cleanliness when installing ⇒ page 13
- ❑ Removing and installing ⇒ page 285
- ❑ Take care not to tilt when installing

5 - O-ring

- ❑ Renew after removing

6 - Roller tappet

- ❑ May remain lodged in vacuum pump when high-pressure pump is removed

7 - Bolt

- ❑ Tighten in stages ⇒ page 286
- ❑ Final tightening torque: 20 Nm

7.2 Removing and installing high-pressure pump

WARNING

Fuel system operates under high pressure. Always dissipate fuel pressure prior to opening fuel system. For procedure, refer to ⇒ page 252

Note

- *The high-pressure fuel pump should only be removed and installed when the engine is cold.*
- *When installing the high-pressure fuel pump, it is essential to ensure that no dirt enters the fuel system.*
- *Use a cloth to catch escaping fuel.*
- *The O-ring must always be renewed.*
- *Always ensure that the high-pressure fuel pipe is free of tension when tightening the connection.*

Removing

– Remove engine cover panel ⇒ page 54 .

– Unplug electrical connector -1- from fuel metering valve -N290- .

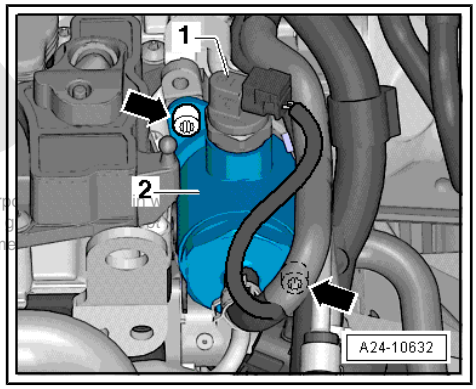

– Disconnect both fuel lines -arrows-.

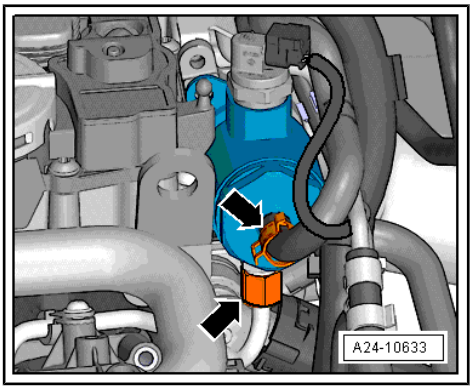

– Remove 2 bolts -arrows-.

– Carefully pull out high-pressure pump. It is possible that the roller tappet may remain lodged in the vacuum pump.

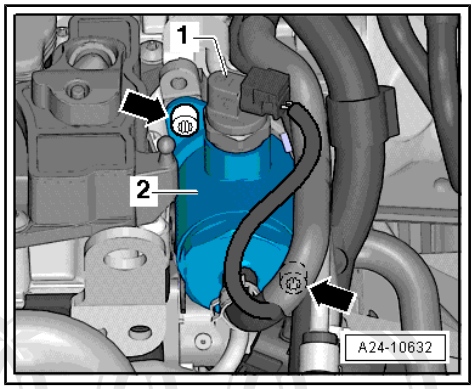

Installing

– Renew O-ring for high-pressure pump.

– Fit roller tappet in vacuum pump (check roller tappet for damage first).

Note

♦ *The roller tappet must be positioned at the lowest point when installing the high-pressure pump.*

♦ *When installing a used high-pressure pump, the connecting piece for the fuel supply line (high-pressure section of the system) must be renewed.*

– Turn crankshaft until roller tappet is positioned at lowest point.

– Fit high-pressure pump in vacuum pump.

– Now tighten bolts -arrows- hand-tight in small steps.

– Then initially tighten securing bolts alternately to 5 Nm (do not tilt high-pressure pump).

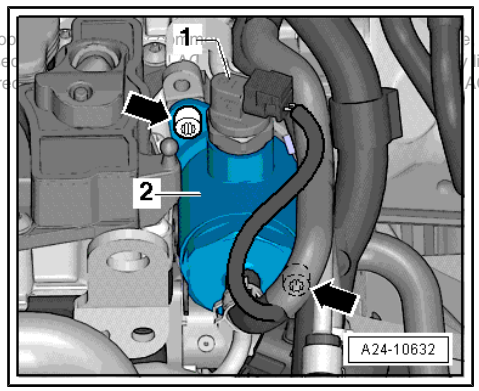

Note

The high-pressure pump can be damaged if it is tightened too much on one side (keep it straight).

• Final tightening torque for securing bolts
⇒ Item 7 (page 284)

– Tighten union nut on high-pressure pipe hand-tight initially. Position high-pressure pipe so it is free of stress and tighten union nut.

Note

Check fuel system for leaks.

8 Lambda probe

⇒ “8.1 Exploded view - Lambda probe”, page 287

⇒ “8.2 Removing and installing Lambda probe”, page 287

8.1 Exploded view - Lambda probe

1 - Nut
- ❑ Tightening torque ⇒ Item 1 (page 300)

2 - Gasket
- ❑ Renew

3 - Turbocharger

4 - Lambda probe - G39- and Lambda probe heater - Z19-
- ❑ Removing and installing ⇒ page 287
- ❑ 55 Nm

5 - Lambda probe after catalytic converter - G130- and Lambda probe heater 1 after catalytic converter - Z29-
- ❑ Removing and installing ⇒ page 288
- ❑ 55 Nm

6 - Catalytic converter

7 - Nut
- ❑ Tightening torque ⇒ Item 7 (page 300)

8 - Gasket
- ❑ Renew

9 - Front exhaust pipe

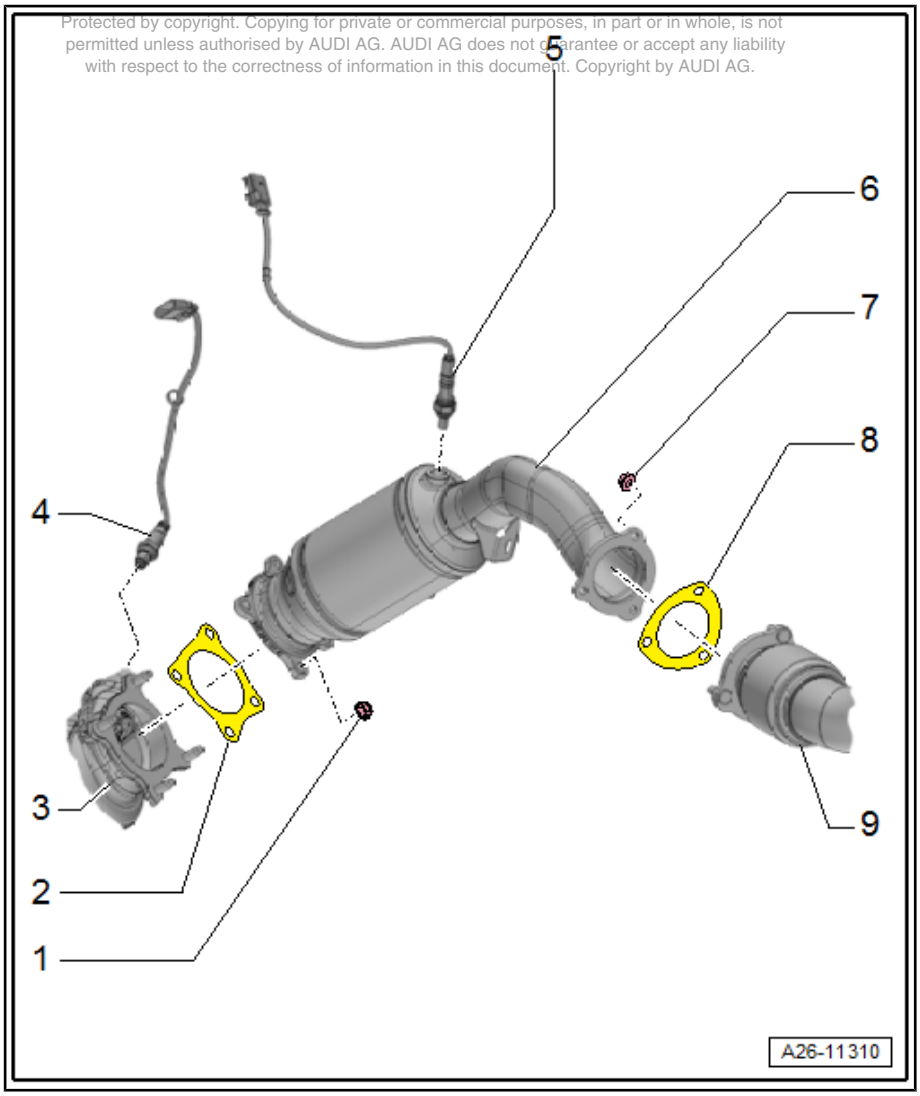

8.2 Removing and installing Lambda probe

⇒ “8.2.1 Removing and installing Lambda probe G39 ”, page 287

⇒ “8.2.2 Removing and installing Lambda probe after catalytic converter G130 ”, page 288

8.2.1 Removing and installing Lambda probe - G39-

Special tools and workshop equipment required

- Lambda probe open ring spanner set - 3337-

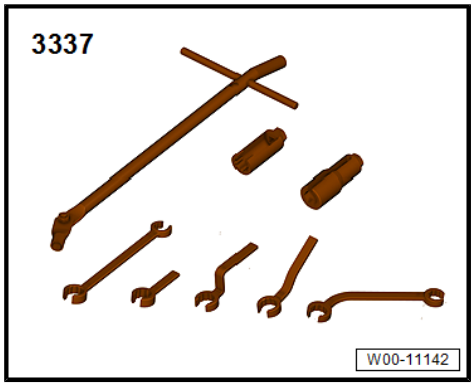

Removing

– Unplug electrical connector -2- for Lambda probe - G39- and Lambda probe heater - Z19- .

– Unscrew Lambda probe - G39- -1- using tool from Lambda probe open ring spanner set - 3337- .

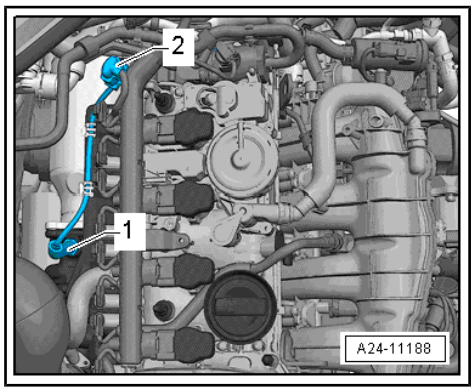

Installing

When installing, note the following:

Note

- *Threads of new Lambda probes are already coated with assembly paste; the paste must not get into the slots on the probe body.*
- *In the case of a used Lambda probe grease only the thread with high-temperature paste. The paste must not get into the slots on the Lambda probe body. High-temperature paste ⇒ Parts catalogue*
- *When installing, the Lambda probe wiring must always be reattached at the same locations to prevent it from coming into contact with the exhaust pipe.*

Tightening torques

- ⇒ “8.1 Exploded view - Lambda probe”, page 287

8.2.2 Removing and installing Lambda probe after catalytic converter - G130-

Special tools and workshop equipment required

- Lambda probe open ring spanner set - 3337-

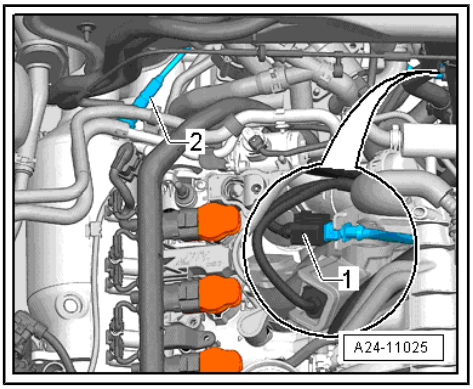

Removing

– Unplug electrical connector -1- for Lambda probe after catalytic converter - G130- and Lambda probe 1 heater after catalytic converter - Z29- .

– Unscrew Lambda probe after catalytic converter - G130- -2- using tool from Lambda probe open ring spanner set - 3337- .

Installing

When installing, note the following:

Note

- *Threads of new Lambda probes are already coated with assembly paste; the paste must not get into the slots on the probe body.*
- *In the case of a used Lambda probe grease only the thread with high-temperature paste. The paste must not get into the slots on the Lambda probe body. High-temperature paste ⇒ Parts catalogue*
- *When installing, the Lambda probe wiring must always be reattached at the same locations to prevent it from coming into contact with the exhaust pipe.*

Tightening torques

- ⇒ "8.1 Exploded view - Lambda probe", page 287

9 Engine control unit

⇒ “9.1 Wiring and component check”, page 290

⇒ “9.2 Removing and installing engine control unit J623 ”, page 291

9.1 Wiring and component check

Special tools and workshop equipment required

- Isolator box, 198-pin - VAS 6606/1-1-
- Isolator box, 198-pin - VAS 6606/1-2-
- Isolator box, 198-pin - VAS 6606/1-3-
- Sheets -VAS 6606/1-1-
- Sheets -VAS 6606/2-1-
- Sheets -VAS 6606/3-1-
- Set of cables -VAS 6606/7-1- and -VAS 6606/7-2-

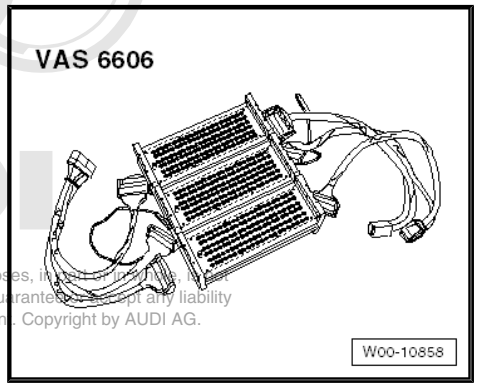

Note

- *Always make sure that the cables are properly connected.*
- *Do not use damaged or worn tools and accessories.*
- *Observe operating instructions.*

– Connect both cable sets -VAS 6606/7-1- and -VAS 6606/7-2- to the three isolator boxes -VAS 6606- .

– Use the following sheets:

- -VAS 6606/1-1- for isolator box, 198-pin - VAS 6606/1-1-
- -VAS 6606/2-1- for isolator box, 198-pin - VAS 6606/1-2-
- -VAS 6606/3-1- for isolator box, 198-pin - VAS 6606/1-3-

Note

Make sure that all plug-in bridges are inserted completely in all isolator boxes.

– Connect earth strap to an isolator box and to an earth point on the vehicle.

– Remove engine control unit ⇒ page 291 .

– Connect engine control unit to cable set -VAS 6606/7-1- .

– Connect vehicle wiring harness to cable set -VAS 6606/7-2- .

The connection on the engine control unit consists of a large and a small connector.

The large connector has 105 pins and is assigned to the sheets for the isolator box marked “A 1 to A 105”.

The small connector has 91 pins and is assigned to the sheets for the isolator box marked “B 1 to B 91”.

When a push-in bridge is pulled out, the corresponding wiring connection is disconnected.

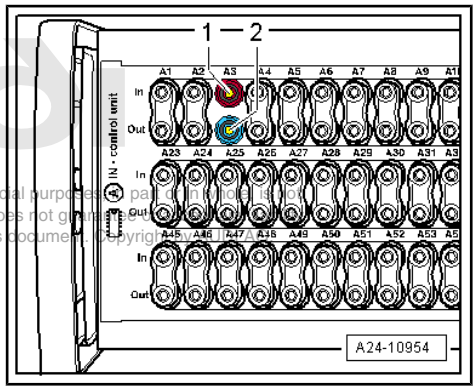

Note

- *The “In” contact -1- (red socket) leads to the engine control unit.*
- *The “Out” contact -2- (blue socket) leads to the wiring harness.*

– Carry out test as described in appropriate repair procedures.

Installation is performed in the reverse sequence.

Erase any entries generated in event memory ⇒ Vehicle diagnostic tester, `Guided Functions`, `Interrogate event memory`, then `Generate readiness code`.

Note

After completion of the Guided Fault Finding routine, the tester will attempt to erase the event memories of all control units. If this is not successful, the remaining events saved in the memories must be dealt with so that all event memory entries can be erased.

9.2 Removing and installing engine control unit - J623-

Removing

– If engine control unit is renewed, select test sequence/function “Replace engine control unit” in “Guided Functions” mode ⇒ vehicle diagnostic tester .

– Switch off ignition.

– Remove plenum chamber cover ⇒ General body repairs, exterior; Rep. gr. 50 ; Bulkhead; Removing and installing plenum chamber cover .

– Remove body brace ⇒ Running gear, axles, steering; Rep. gr. 40 ; Suspension strut, upper links; Removing and installing body brace .

– Release clips -arrows- and detach engine control unit - J623- -item 2-.

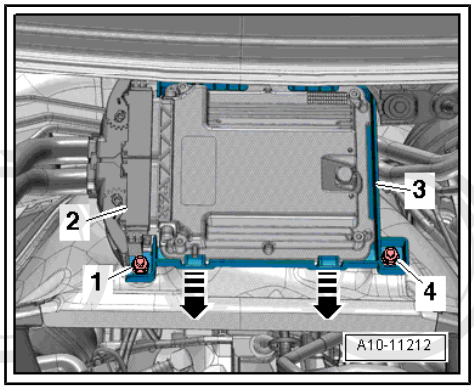

Note

Disregard -items 1, 3, 4-.

Installing

Installation is carried out in the reverse order; note the following:

– Install plenum chamber cover ⇒ General body repairs, exterior; Rep. gr. 50 ; Bulkhead; Removing and installing plenum chamber cover .

After installing a new engine control unit, the following operation must be performed:

– Activate engine control unit using ⇒ Vehicle diagnostic tester in “Guided Functions” mode, “Replace engine control unit”.

Tightening torques

♦ Body brace ⇒ Running gear, axles, steering; Rep. gr. 40 ; Suspension strut, upper links; Exploded view - suspension strut, upper links

26 – Exhaust system

1 Exhaust pipes/silencers

1.1 Exploded view - silencers

Note

The exhaust manifold and the turbocharger are combined as one unit; removing and installing ⇒ page 232 .

1 - Centre silencer

- ❑ Combined in one unit with rear silencers as original equipment. Can be renewed individually for repair purposes
- ❑ Cutting point ⇒ page 295
- ❑ Align exhaust system so it is free of stress ⇒ page 298

2 - Bolt

- ❑ 23 Nm

3 - Mounting

- ❑ Renew if damaged
- ❑ Check preload ⇒ "1.5 Stress-free alignment of exhaust system", page 298

4 - Nut

- ❑ 23 Nm

5 - Clamp (front)

- ❑ Before tightening, align exhaust system so it is free of stress ⇒ page 298
- ❑ Installation position ⇒ page 295
- ❑ Tighten bolt connections evenly.

6 - Bolt

- ❑ 23 Nm

7 - Mounting

- ❑ Renew if damaged

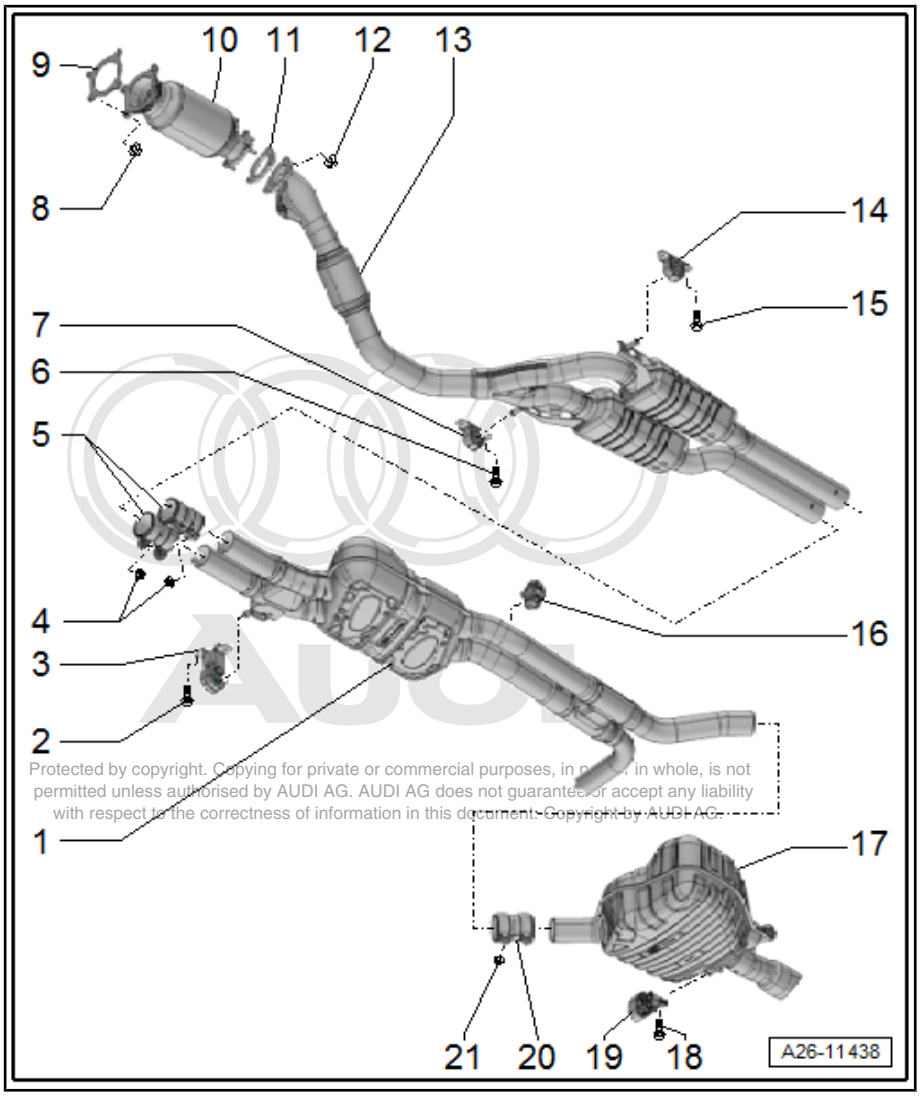

- ❑ Check preload ⇒ “1.5 Stress-free alignment of exhaust system”, page 298

8 - Nut

- ❑ Renew
- ❑ 20 Nm

9 - Gasket

- ❑ Renew

10 - Catalytic converter

- ❑ Protect catalytic converter from damage by knocks and impact
- ❑ Removing and installing ⇒ page 301
- ❑ Align exhaust system so it is free of stress ⇒ page 298

11 - Gasket

- ❑ Renew

12 - Nut

- ❑ Renew
- ❑ 20 Nm

13 - Front silencer

> **Caution**
>
> *Avoid damage to flexible joint.*
> *Do not bend flexible joint more than 10°.*
>
> *Install flexible joint so that it is not under tension.*
>
> *Take care not to damage wire mesh on flexible joint.*

- ❑ Removing and installing ⇒ page 296
- ❑ Align exhaust system so it is free of stress ⇒ page 298

14 - Mounting

- ❑ Renew if damaged
- ❑ Check preload ⇒ “1.5 Stress-free alignment of exhaust system”, page 298

15 - Bolt

- ❑ 23 Nm

16 - Mounting

- ❑ Renew if damaged
- ❑ Check preload ⇒ “1.5 Stress-free alignment of exhaust system”, page 298

17 - Rear silencer (left-side)

- ❑ Combined as one unit with centre silencer as original equipment
- ❑ Centre silencer and rear silencer can be renewed separately as required
- ❑ Cutting point: centre silencer / rear silencer ⇒ page 295
- ❑ Align exhaust system so it is free of stress ⇒ page 298

18 - Bolt

- ❑ 23 Nm

19 - Mounting

- ❑ Renew if damaged
- ❑ Check preload ⇒ “1.5 Stress-free alignment of exhaust system”, page 298

20 - Clamp (rear left)

- ❑ For separate replacement of centre and rear silencers
- ❑ Installation position ⇒ page 295
- ❑ Before tightening, align exhaust system so it is free of stress ⇒ page 298
- ❑ Tighten bolt connections evenly

21 - Nut

- ❑ 23 Nm

Installation position of front clamp

– Fit the clamp at the angle shown.

- Bolt connections face to right.
- Nuts face upwards.
- α = approx. 20°

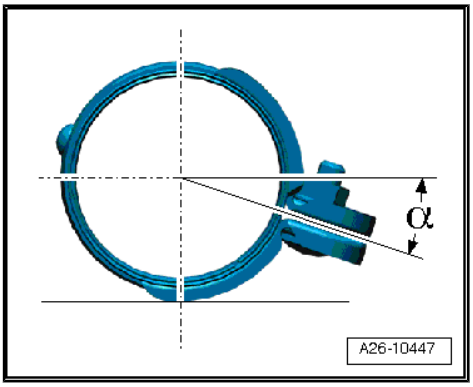

Installation position of rear clamps

– Install clamps so that the bolt ends do not protrude beyond bottom of clamp.

- Installation position: bolted connections face forwards.

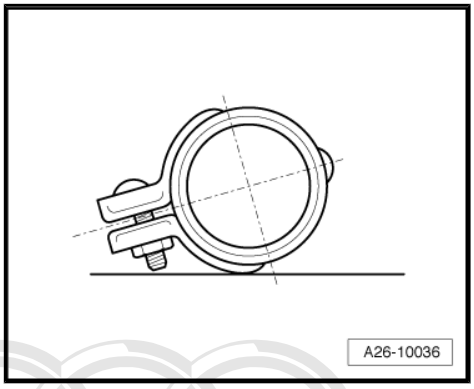

1.2 Separating exhaust pipes/silencers

♦ The connecting pipe can be cut through at the cutting location in order to renew the centre or rear silencer separately.

♦ The cutting point is marked by an indentation on the circumference of the exhaust pipe.

Special tools and workshop equipment required

♦ Chain pipe cutter - VAS 6254-

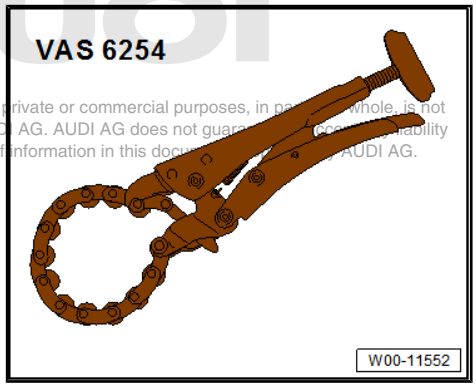

Procedure

– Cut through exhaust pipes at right angle at the position marked -arrows- using chain pipe cutter - VAS 6254- .

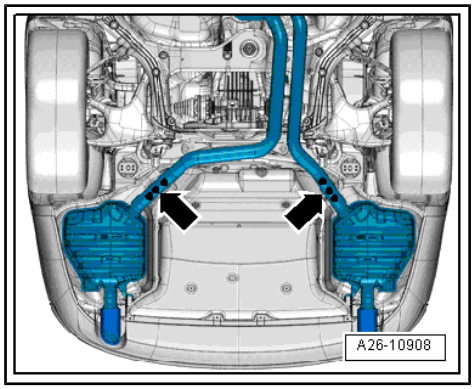

– Position centre of clamps -arrows- over cutting location.

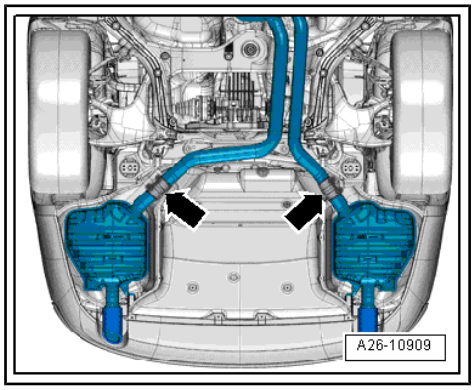

– Install clamps so that the bolt ends do not protrude beyond bottom of clamp.

• Installation position: bolted connections face forwards.

– Align the exhaust system so it is free of stress ⇒ page 298 .

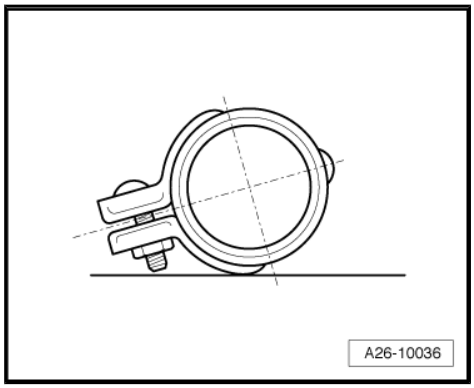

Tightening torques

♦ ⇒ “1.1 Exploded view - silencers”, page 293

1.3 Removing and installing front silencers

Removing

– Remove noise insulation (rear) ⇒ General body repairs, exterior; Rep. gr. 66 ; Noise insulation; Removing and installing noise insulation .

– Remove tunnel cross-piece (front) ⇒ General body repairs, exterior; Rep. gr. 66 ; Underbody trim; Removing and installing tunnel cross-piece .

– Remove nuts -1 and 3- for front silencer.

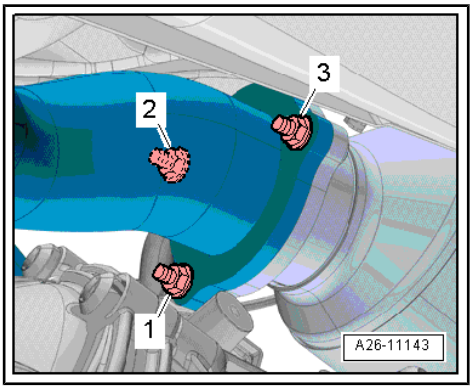

> **Caution**
>
> *Risk of damage to flexible joints in front silencer.*
>
> ♦ *Do NOT bend the flexible joints in the front silencer more than 10°.*

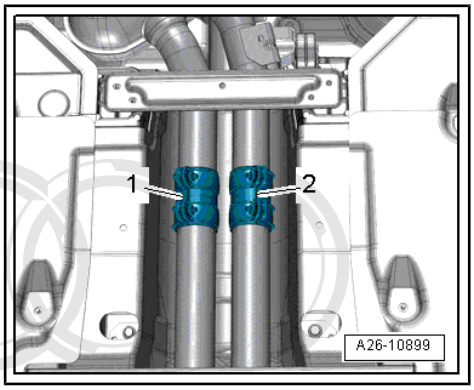

– Release clamps -1 and 2- and push to rear.

– Remove bolts -arrows- and detach front silencers.

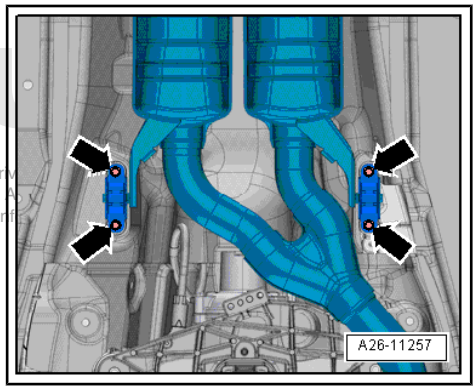

Installing

Installation is carried out in the reverse order; note the following:

> **Note**
>
> *Renew seals, gaskets and self-locking nuts.*

– Align the exhaust system so it is free of stress ⇒ page 298 .

Tightening torques

♦ ⇒ “1.1 Exploded view - silencers”, page 293

♦ Tunnel cross-piece ⇒ General body repairs, exterior; Rep. gr. 66 ; Underbody trim; Exploded view - underbody trim

♦ ⇒ General body repairs, exterior; Rep. gr. 66 ; Noise insulation; Exploded view - noise insulation

1.4 Removing and installing silencers

Removing

– Release clamps -1 and 2- and push to rear.

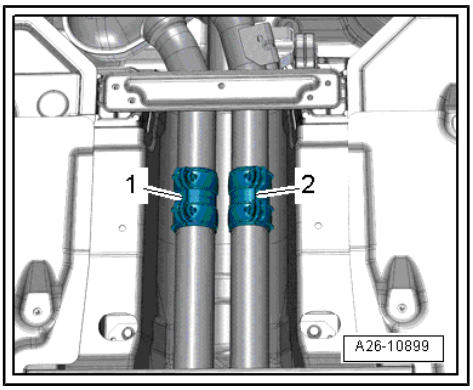

– Unplug electrical connector -3-.

– Disengage mounting -2- at exhaust system (rear).

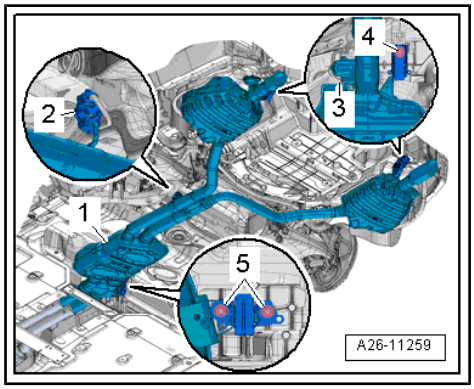

> **WARNING**
>
> *Risk of accident caused by weight of exhaust system*
>
> ♦ *A second mechanic is required for detaching the exhaust system (rear).*

– Remove bolts -4- (left and right) and bolts -5- and detach exhaust system (rear).

Installing

Installation is carried out in the reverse order; note the following:

Note

Renew seals, gaskets and self-locking nuts.

– Align the exhaust system so it is free of stress ⇒ page 298 .

Tightening torques

♦ ⇒ “1.1 Exploded view - silencers”, page 293

1.5 Stress-free alignment of exhaust system

Procedure

• The exhaust system must be aligned when it is cool.

Vehicles without clamps between centre silencer and rear silencers

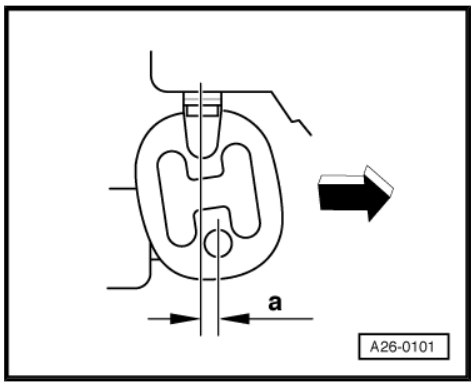

– Loosen bolt connections on front clamps.

– Push exhaust system towards front of vehicle -arrow- until mountings in front of centre silencer are preloaded by -a- = 6 ... 10 mm.

– Tighten bolt connections on clamps evenly.

– Align tailpipes ⇒ page 299 .

Vehicles with clamps between centre silencer and rear silencers

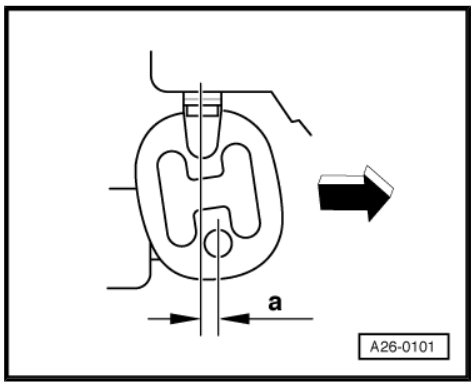

Note

On a vehicle with clamps fitted between the centre silencer and rear silencers, it is also necessary to align the centre silencer.

– Loosen bolt connections on front and rear clamps.

– Push exhaust system towards front of vehicle -arrow- until mountings in front of centre silencer are preloaded by -a- = 6 ... 10 mm.

– Tighten bolt connections on front clamp evenly.

– Push rear section of exhaust system towards front of vehicle -arrow-, so that mountings (rear) for rear silencers are preloaded by -a- = 11 ... 15 mm.
– Align rear silencers so they are horizontal.
– Tighten bolt connections on rear clamps evenly.
– Align tailpipes ⇒ page 299 .

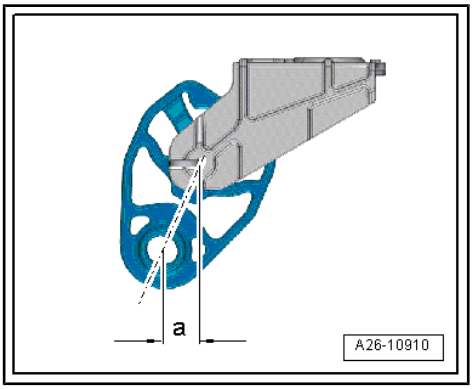

Aligning tailpipes

• Tightening torque
⇒ “1.1 Exploded view - silencers”, page 293
– Check clearance between tailpipes and bumper on both sides:
• Dimension -x- (left-side) = dimension -x- (right-side)

Tightening torques

♦ ⇒ “1.1 Exploded view - silencers”, page 293

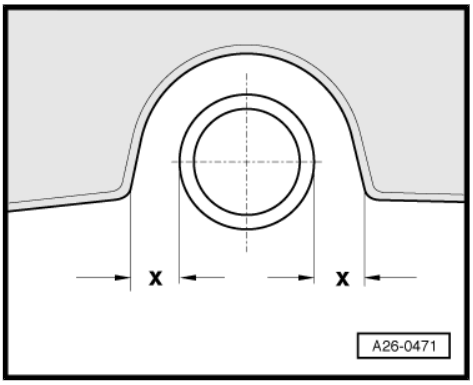

1.6 Checking exhaust system for leaks

– Start the engine and run at idling speed.
– Plug tailpipes (e. g. with rags or stopper) and leave plugged until the check is complete.
– Listen for noise at connection points (cylinder head/exhaust manifold, exhaust manifold/front exhaust pipe, etc.) to locate any leaks.
– Rectify any leaks that are found.

2 Emission control system

⇒ “2.1 Exploded view - emission control system”, page 300

⇒ “2.2 Removing and installing catalytic converter”, page 301

2.1 Exploded view - emission control system

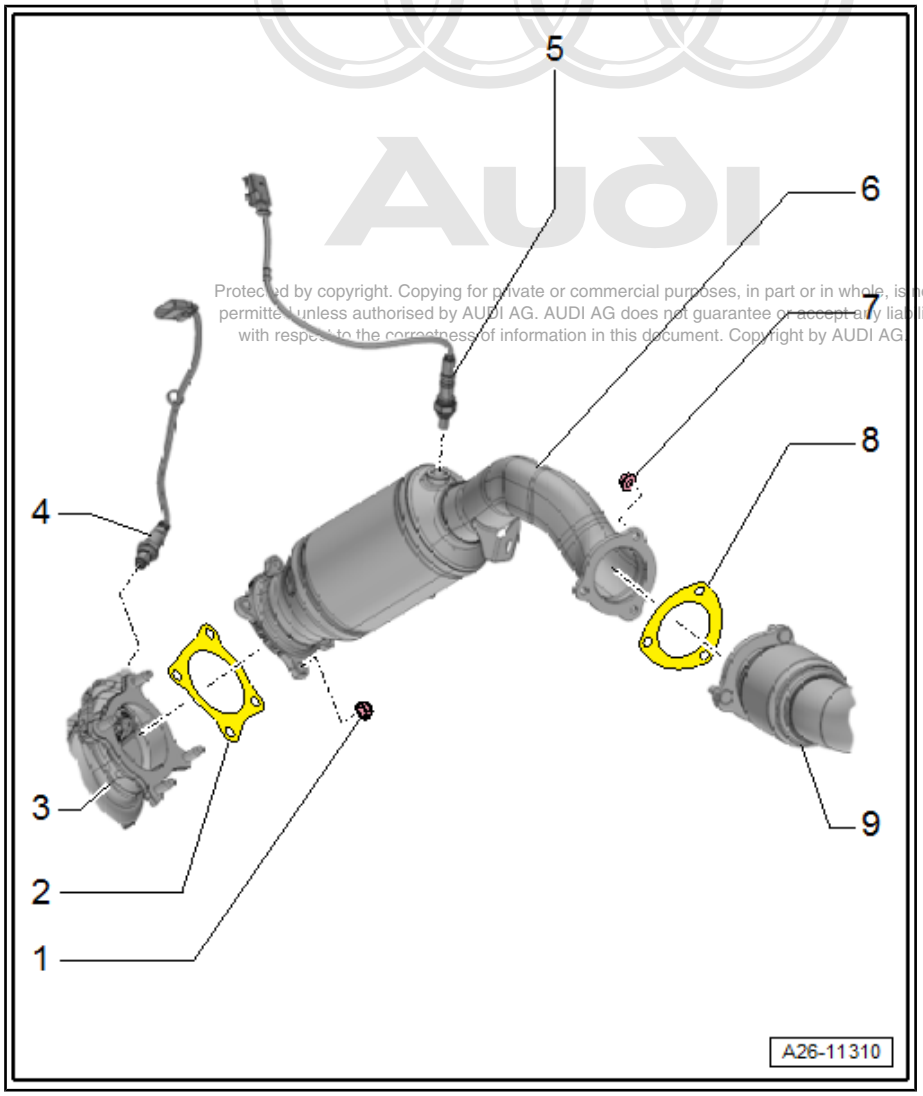

1 - Nut

- ❑ Renew
- ❑ Coat studs of turbocharger with high-temperature paste
- ❑ High-temperature paste ⇒ Electronic parts catalogue
- ❑ 40 Nm

2 - Gasket

- ❑ Renew

3 - Turbocharger

4 - Lambda probe - G39- and Lambda probe heater - Z19-

- ❑ Removing and installing ⇒ page 287

5 - Lambda probe after catalytic converter - G130- and Lambda probe heater 1 after catalytic converter - Z29-

- ❑ Removing and installing ⇒ page 288

6 - Catalytic converter

- ❑ Protect catalytic converter from damage by knocks and impact
- ❑ Removing and installing ⇒ page 301
- ❑ Align exhaust system so it is free of stress ⇒ page 298

7 - Nut

- ❑ Renew
- ❑ 25 Nm

8 - Gasket

- ❑ Renew

9 - Front exhaust pipe

Exhaust flap control unit - J883- - tightening torque

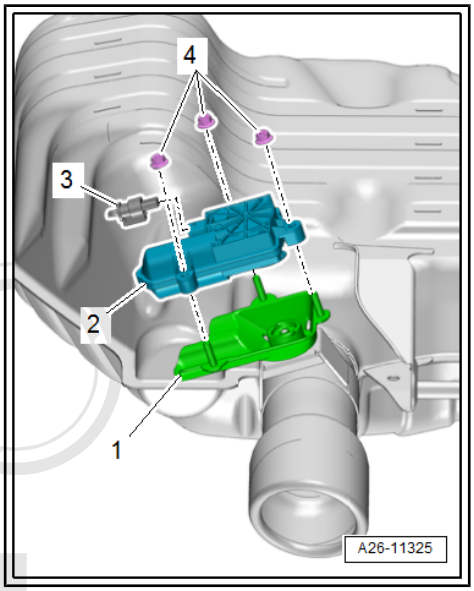

Note

Renew the nuts.

– Tighten nuts -4- to 3 Nm.

2.2 Removing and installing catalytic converter

Note

For all work on vehicles with high-voltage system, note additional warnings for working on such vehicles ⇒ page 2 and ⇒ Electrical system, hybrid; Rep. gr. 93 ; General warning instructions for work on the high-voltage system .

WARNING

Safety hazard: the engine can start unexpectedly.

Before carrying out general work on a vehicle with high-voltage electrical system, switch off the ignition and remove the ignition key from the vehicle.

WARNING

Working on vehicles with high-voltage wiring:

- ***Do not support yourself or tools on high-voltage wiring or associated components --> this can damage the insulation.***
- ***High-voltage wiring must not be excessively bent or kinked --> this can damage the insulation.***
- ***The round high-voltage connectors are colour-coded with an external coloured ring and are provided with mechanical coding or guide lugs. It is important to observe this coding when joining up the round high-voltage connectors, otherwise the connectors can be damaged.***

DANGER!

Risk of fatal injury if high-voltage components are damaged.

Observe the following when working in the vicinity of high-voltage components or wiring:

- *It is not permitted to use cutting or forming tools, other sharp-edged tools or heat sources such as welding, brazing, soldering, hot air or thermal bonding equipment.*
- *Before starting work, visually inspect the high-voltage components in the areas involved.*
- *Before working in the engine compartment, visually inspect the power and control electronics for electric drive - JX1- , electric drive motor - V141- , air conditioner compressor - V470- and high-voltage wiring.*
- *Before working on the vehicle underbody, visually inspect the high-voltage wiring and covers.*
- *Before working on the rear section of the vehicle, visually inspect the high-voltage wiring and the electro-box with the maintenance connector for high-voltage system - TW - .*
- *Visually inspect all potential equalisation lines.*

Check the following when making the visual inspection:

- *There must be no external damage on any component.*
- *The insulation of the high-voltage wiring and potential equalisation lines must not be damaged.*
- *There must be no unusual deformation of the high-voltage wiring.*
- *All high-voltage components must be identified by a red warning sticker.*

Removing

DANGER!

High voltage can cause fatal injury.

Danger of severe or fatal injuries from electric shock.

- *The high-voltage system may only be de-energised by a suitably qualified person (Audi high-voltage technician).*
- *It must be definitely confirmed that the high-voltage system is de-energised. The system may only be de-energised using the vehicle diagnostic tester via "Guided Fault Finding".*
- *The qualified person (Audi high-voltage technician) confirms that the system is de-energised and uses the locking cap - T40262- to ensure that the system cannot be re-energised. The ignition key and the maintenance connector for high-voltage system - TW - are then stored in a safe place by the qualified person.*
- *The qualified person (Audi high-voltage technician) marks the vehicle by attaching the appropriate warning signs.*

Note

- *De-energising high-voltage system:*
- *Connect vehicle diagnostic tester*
- *Select* `Guided Fault Finding` *mode*
- *Using the* `Go To` *button, select the following menu options in succession:*
- `Selecting function/component`
- `Body`
- `Electrical system`
- `Self-diagnosis compatible systems`
- `8C - Hybrid battery management -J840`
- `8C - Hybrid battery management, functions`
- `51 - De-energise high-voltage system (Rep. gr. 93)`

– Remove air cleaner housing ⇒ page 257 .
– Remove front silencers ⇒ page 296 .
– Detach electrical connector -1- from bracket and unplug.
– Move clear electrical wiring harness.

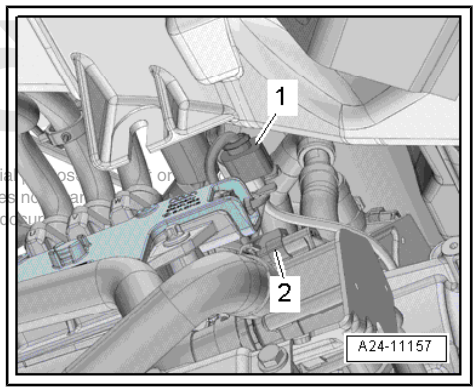

Note

Disregard -item 2-.

– Remove nuts -arrows- and lift out catalytic converter.

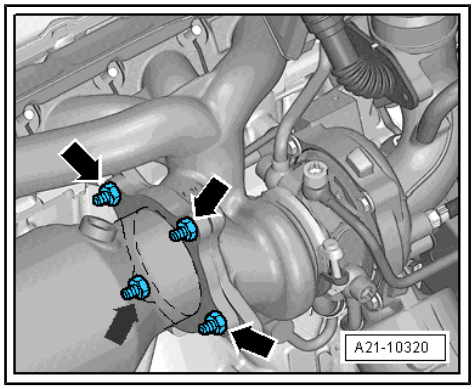

Installing

Installation is carried out in the reverse order; note the following:

Note

Renew seals, gaskets and self-locking nuts.

– Install front silencers ⇒ page 296 .

– Install air cleaner housing ⇒ page 257 .

Re-energising the high-voltage system

DANGER!

High voltage can cause fatal injury.

Danger of severe or fatal injuries from electric shock.

- ***The high-voltage system may only be re-energised by a suitably qualified person (Audi high-voltage technician).***
- ***The system may only be re-energised using the vehicle diagnostic tester via "Guided Fault Finding".***
- ***The vehicle is then made ready for operation again by the qualified person (Audi high-voltage technician).***
- ***The qualified person (Audi high-voltage technician) marks the vehicle by attaching the appropriate warning signs.***

Note

- *Re-energising high-voltage system:*
- *Connect vehicle diagnostic tester*
- *Select* `Guided Fault Finding` *mode*
- *Using the* `Go To` *button, select the following menu options in succession:*
- `Selecting function/component`
- `Body`
- `Electrical system`
- `Self-diagnosis compatible systems`
- `8C - Hybrid battery management -J840`
- `8C - Hybrid battery management, functions`
- `51 - Re-energise high-voltage system (Rep. gr. 93)`

Tightening torques

- ⇒ "2.1 Exploded view - emission control system", page 300

2.3 Removing and installing exhaust flap control unit - J883-

Removing

– Remove rear silencer ⇒ page 297 .

– Remove nuts -4- and detach exhaust flap control unit -2-.

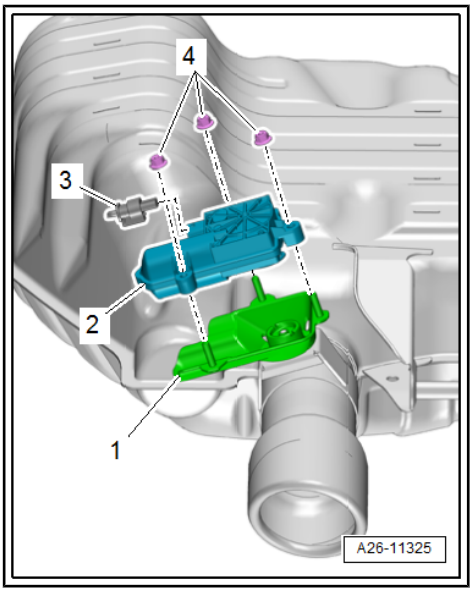

Note

Disregard -items 1, 4-.

Installing

Installation is carried out in the reverse order; note the following:

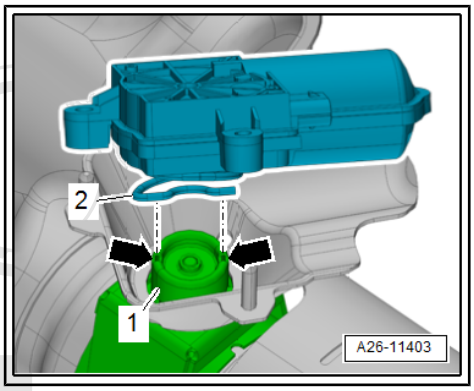

Note

Renew the nuts.

– Move exhaust flap control unit - J883- into installation position.

• Spring -2- must engage in grooves -arrows- on exhaust flap -1-.

– Install rear silencer ⇒ page 297 .

Tightening torques

◆ ⇒ Fig. "" Exhaust flap control unit -J883- tightening torque"", page 301

3 Secondary air system

3.1 Exploded view - secondary air system

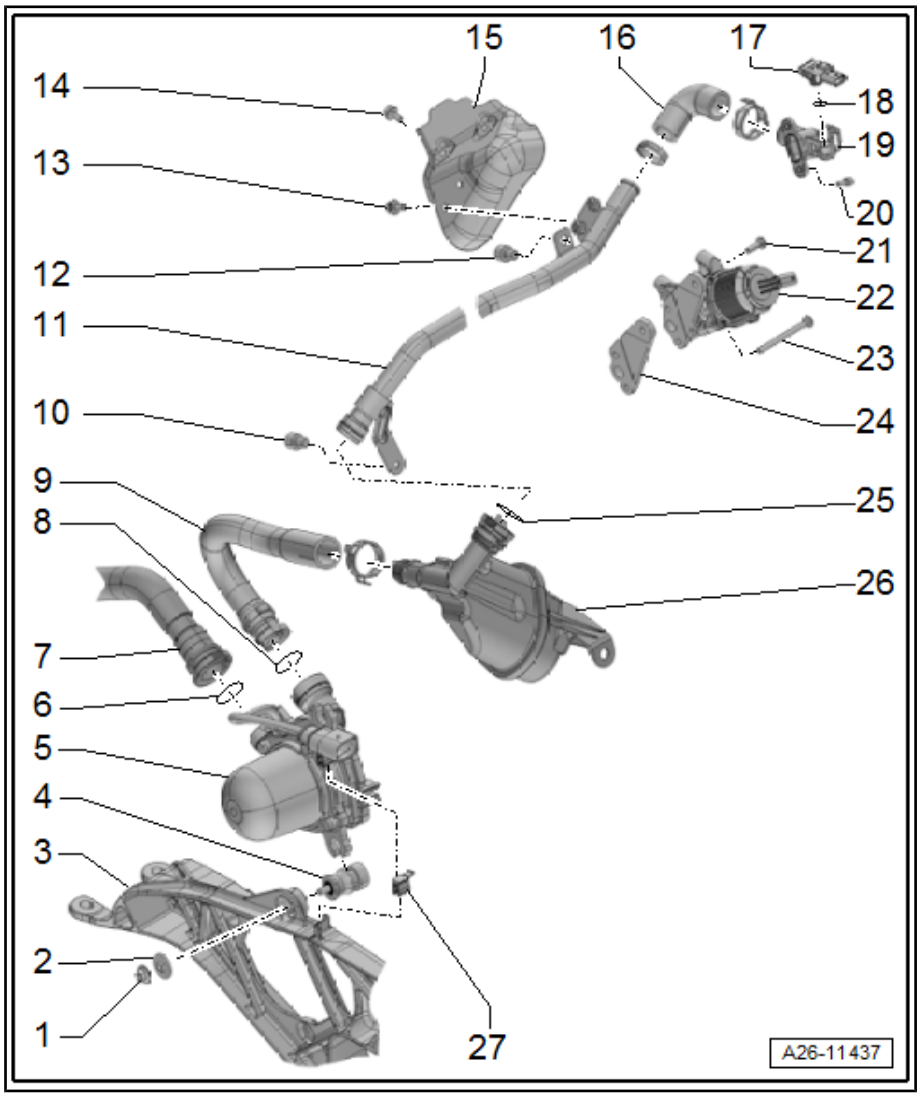

1 - Nut
- ❑ 8 Nm

2 - Washer

3 - Cross piece
- ❑ For torque reaction support

4 - Bonded rubber bush
- ❑ 3x

5 - Secondary air pump motor - V101-
- ❑ Removing and installing ⇒ page 307

6 - O-ring
- ❑ Renew

7 - Hose
- ❑ For secondary air

8 - O-ring
- ❑ Renew

9 - Hose
- ❑ For secondary air

10 - Bolt
- ❑ 23 Nm

11 - Pipe
- ❑ For secondary air

12 - Bolt
- ❑ 23 Nm

13 - Bolt
- ❑ 9 Nm

14 - Bolt
- ❑ 9 Nm

15 - Heat shield

16 - Hose
- ❑ For secondary air

17 - Sender 1 for secondary air pressure - G609-
- ❑ Removing and installing ⇒ page 308

18 - O-ring

- ❑ Renew

19 - Connecting piece

20 - Bolt

- ❑ 9 Nm

21 - Bolt

- ❑ 9 Nm

22 - Secondary air inlet valve - N112-

- ❑ Removing and installing ⇒ page 307

23 - Bolt

- ❑ 9 Nm

24 - Gasket

25 - O-ring

- ❑ Renew

26 - Resonator

- ❑ For secondary air

27 - Clip

3.2 Removing and installing secondary air pump motor - V101-

Removing

– Remove noise insulation (front) ⇒ General body repairs, exterior; Rep. gr. 66 ; Noise insulation; Removing and installing noise insulation .

– Press release tabs and disconnect secondary air hoses -2-.

– Disengage secondary air pump motor - V101- at bonded rubber bushes -arrows- and detach.

– Detach electrical connector -1- from bracket and unplug.

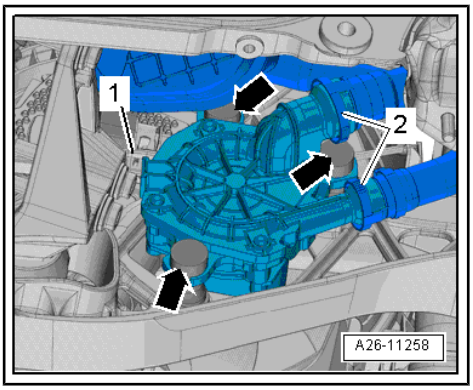

Installing

Installation is carried out in the reverse order; note the following:

Note

Fit new O-rings.

Tightening torques

- ⇒ "3.1 Exploded view - secondary air system", page 306
- ⇒ General body repairs, exterior; Rep. gr. 66 ; Noise insulation; Exploded view - noise insulation

3.3 Removing and installing secondary air inlet valve - N112-

Removing

– Remove engine cover panel ⇒ page 54 .

– Remove plenum chamber partition panel ⇒ General body repairs, exterior; Rep. gr. 50 ; Bulkhead; Exploded view - plenum chamber partition panel .

– Remove bolts -arrows- and detach heat shield -1-.

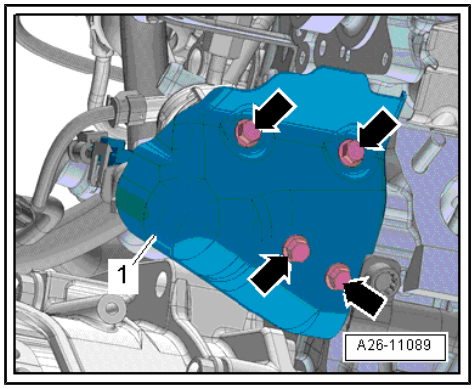

– Unplug electrical connectors -1-.

– Loosen clamp -2-.

– Remove bolts -arrows- and detach secondary air inlet valve - N112- from hose for secondary air system.

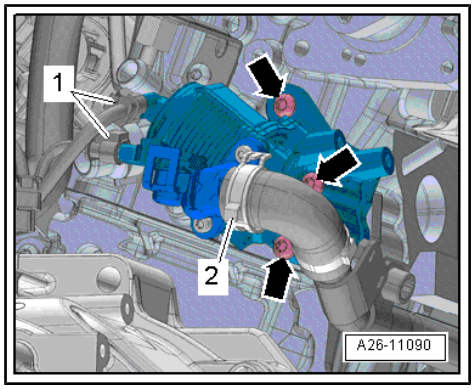

Installing

Installation is carried out in the reverse order; note the following:

Note

- *Renew gasket.*
- *Secure all hose connections with the correct type of hose clips (same as original equipment) ⇒ Electronic parts catalogue .*

– Install engine cover panel ⇒ page 54 .

Tightening torques

- ⇒ “3.1 Exploded view - secondary air system”, page 306
- ⇒ General body repairs, exterior; Rep. gr. 50 ; Bulkhead; Exploded view - plenum chamber partition panel

3.4 Removing and installing sender 1 for secondary air pressure - G609-

Removing

– Remove engine cover panel ⇒ page 54 .

– Unplug electrical connector -1-.

– Release catches -arrows- and detach sender 1 for secondary air pressure - G609- .

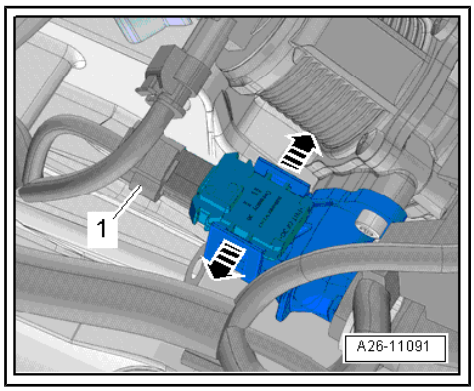

Installing

Installation is carried out in the reverse order; note the following:

Note

Fit new O-ring.

– Install engine cover panel ⇒ page 54 .

28 – Ignition system

1 Ignition system

1.1 Exploded view - ignition system

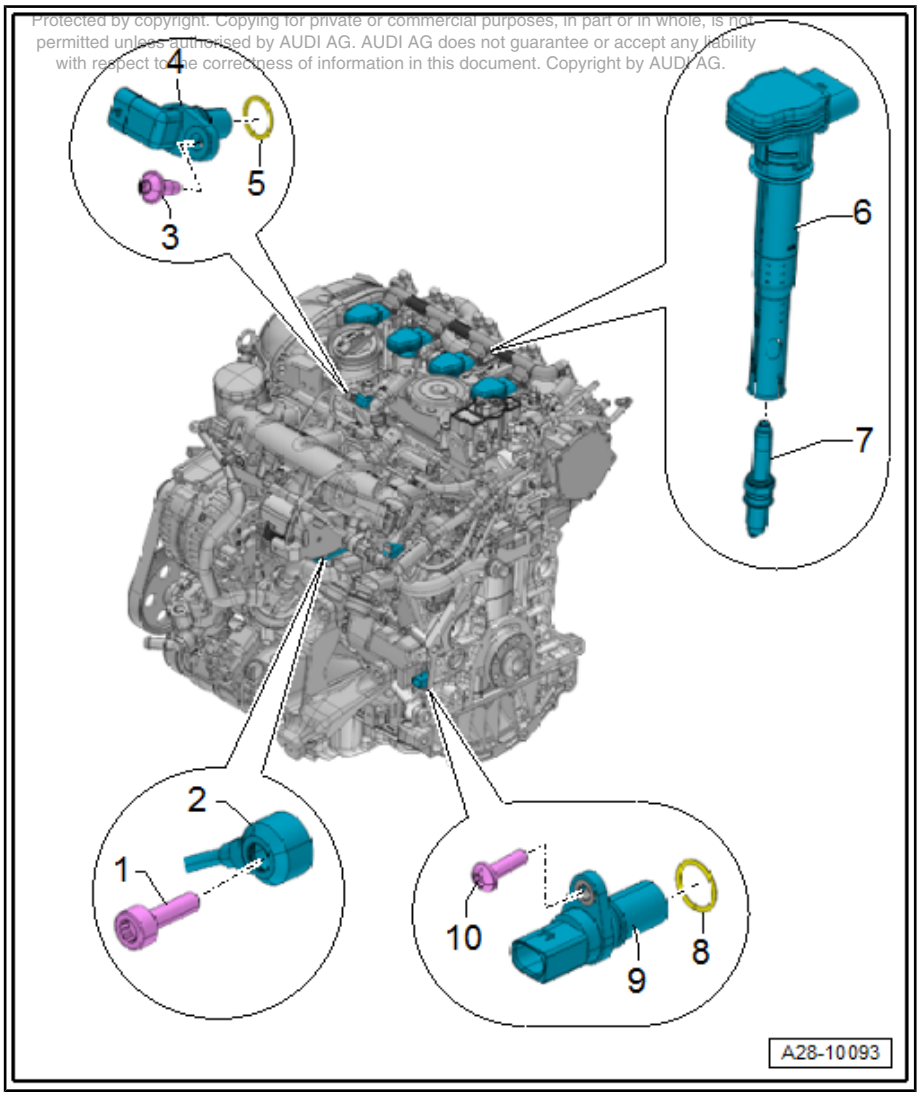

1 - Bolt

- ❑ The tightening torque influences the function of the knock sensor
- ❑ 20 Nm

2 - Knock sensor 1 - G61-

- ❑ Contacts gold-plated
- ❑ Removing and installing ⇒ page 312

3 - Bolt

- ❑ 9 Nm

4 - Hall sender - G40-

- ❑ Removing and installing ⇒ page 313

5 - O-ring

- ❑ Renew

6 - Ignition coil with output stage

- ♦ Ignition coil 1 with output stage - N70-
- ♦ Ignition coil 2 with output stage - N127-
- ♦ Ignition coil 3 with output stage - N291-
- ♦ Ignition coil 4 with output stage - N292-
  - ❑ Removing and installing ⇒ page 310

7 - Spark plug

- ❑ Removing and installing, tightening torque ⇒ Maintenance ; Booklet 410

8 - O-ring

- ❑ Renew

9 - Engine speed sender - G28-

- ❑ Removing and installing ⇒ page 314

10 - Bolt

- ❑ 4.5 Nm

Electrical connectors for ignition coils - tightening torque

– Tighten bolts -arrow- to 5 Nm.

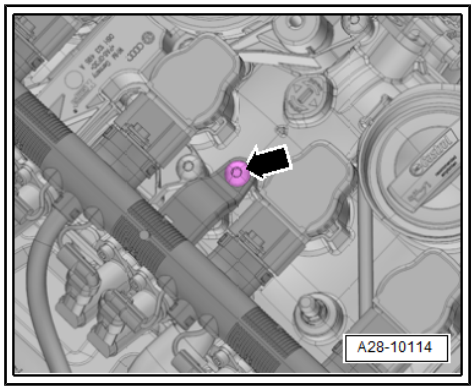

1.2 Test data, spark plugs

Engine data	2.0 ltr. turbo FSI engine
Idling speed is not adjustable	640...800 rpm
Engine speed limiter (deactivates injectors/closes throttle valve)	approx. 6,500 rpm
Ignition timing is determined by the control unit. Ignition timing cannot be adjusted.	
Ignition system	Multi-coil system with 4 ignition coils (output stages integrated) connected directly to spark plugs via spark plug connectors
Firing order	1-3-4-2
Spark plugs	⇒ Electronic parts catalogue

1.3 Removing and installing ignition coils with output stages

Special tools and workshop equipment required

- ♦ Puller - T40039-

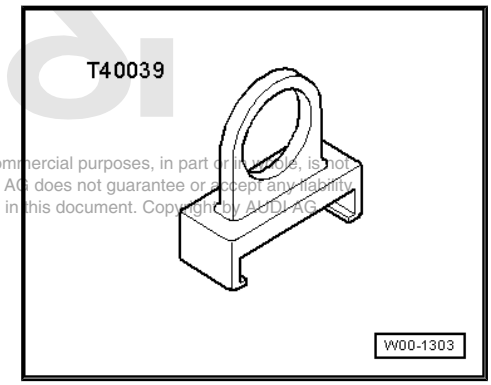

Removing

– Remove engine cover panel ⇒ page 54 .

– Remove bolts -arrow- for connector rail.

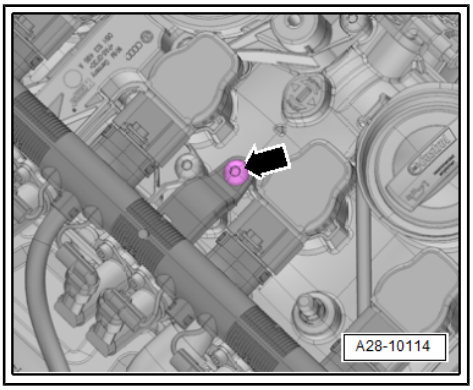

Note

- *To remove ignition coils, fit puller - T40039- onto upper (thick) rib -arrow- of ignition coil with output stage.*
- *The lower ribs can be damaged if they are used.*

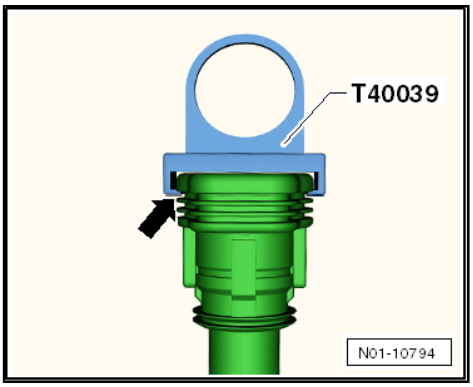

– Pull all ignition coils approx. 30 mm out of spark plug holes using puller - T40039- .

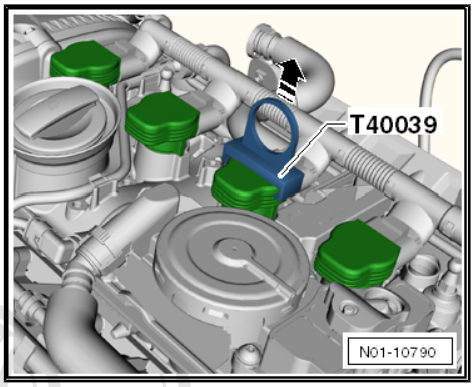

– Release connectors and unplug all connectors from the ignition coils at the same time.

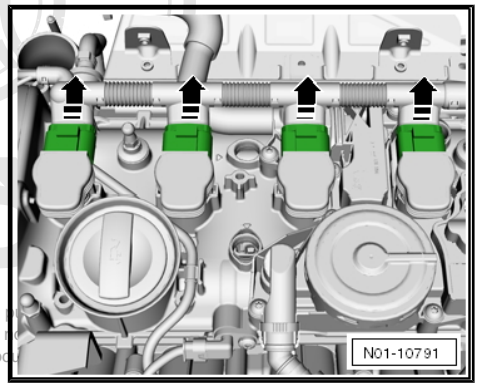

Installing

– Fit all ignition coils loosely into spark plug holes.

– Align the ignition coils with the connectors and attach all connectors onto ignition coils simultaneously.

– Press ignition coils onto spark plugs by hand with uniform pressure (do not use any tools).

– Install engine cover panel ⇒ page 54 .

Tightening torques

♦ ⇒ Fig. ""Electrical connectors for ignition coils - tightening torque"" , page 310

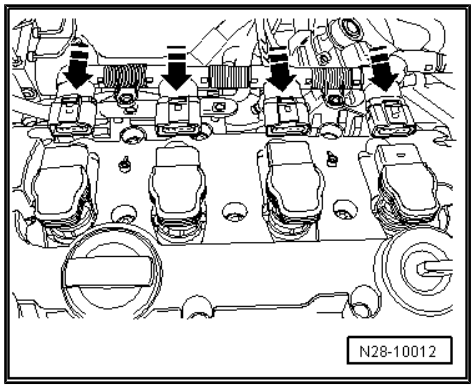

1.4 Removing and installing knock sensor

Safety precautions and repair instructions for vehicles with hybrid drive

DANGER!

Risk of fatal injury if high-voltage components are damaged.

Observe the following when working in the vicinity of high-voltage components or wiring:

- *It is not permitted to use cutting or forming tools, other sharp-edged tools or heat sources such as welding, brazing, soldering, hot air or thermal bonding equipment.*
- *Before starting work, visually inspect the high-voltage components in the areas involved.*
- *Before working in the engine compartment, visually inspect the power and control electronics for electric drive - JX1- , electric drive motor - V141- , air conditioner compressor - V470- and high-voltage wiring.*
- *Before working on the vehicle underbody, visually inspect the high-voltage wiring and covers.*
- *Before working on the rear section of the vehicle, visually inspect the high-voltage wiring and the electro-box with the maintenance connector for high-voltage system - TW - .*
- *Visually inspect all potential equalisation lines.*

Check the following when making the visual inspection:

- *There must be no external damage on any component.*
- *The insulation of the high-voltage wiring and potential equalisation lines must not be damaged.*
- *There must be no unusual deformation of the high-voltage wiring.*
- *All high-voltage components must be identified by a red warning sticker.*

WARNING

Working on vehicles with high-voltage wiring:

- *Do not support yourself or tools on high-voltage wiring or associated components --> this can damage the insulation.*
- *High-voltage wiring must not be excessively bent or kinked --> this can damage the insulation.*
- *The round high-voltage connectors are colour-coded with an external coloured ring and are provided with mechanical coding or guide lugs. It is important to observe this coding when joining up the round high-voltage connectors, otherwise the connectors can be damaged.*

Removing

– Unplug electrical connector -2- at knock sensor 1 - G61- .

– Remove thermostat ⇒ page 202 .

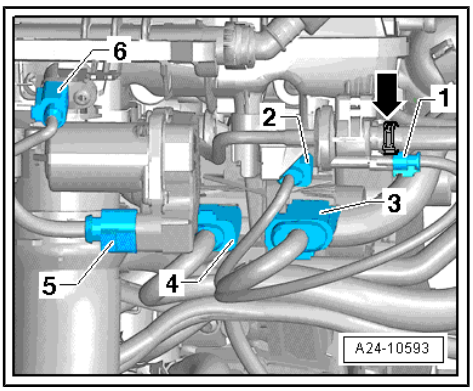

Note

Knock sensor 1 - G61- is located below the intake manifold and behind the coolant pump.

– Remove knock sensor 1 - G61- .

Installing

– Install in reverse order.

– Install thermostat ⇒ page 202 .

Tightening torques

♦ ⇒ “1.1 Exploded view - ignition system”, page 309

1.5 Removing and installing Hall sender

Removing

– Remove engine cover panel ⇒ page 54 .

– Unplug electrical connector -1-.

– Unscrew bolt -2- and detach Hall sender - G40- .

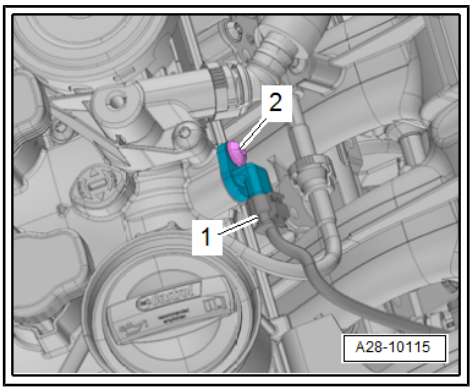

Installing

Installation is carried out in the reverse order; note the following:

Note

Renew O-ring.

– Install engine cover panel ⇒ page 54 .

Tightening torques

♦ ⇒ “1.1 Exploded view - ignition system”, page 309

1.6 Removing and installing engine speed sender - G28-

Special tools and workshop equipment required

- Assembly tool - T10118-

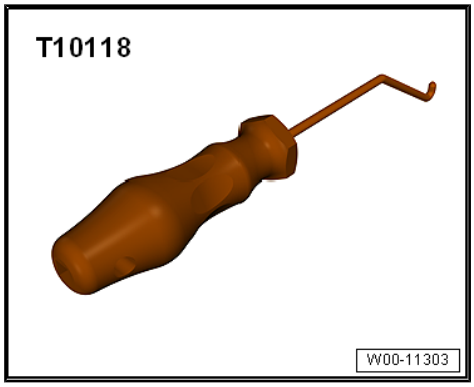

Safety precautions and repair instructions for vehicles with hybrid drive

DANGER!

Risk of fatal injury if high-voltage components are damaged.

Observe the following when working in the vicinity of high-voltage components or wiring:

- *It is not permitted to use cutting or forming tools, other sharp-edged tools or heat sources such as welding, brazing, soldering, hot air or thermal bonding equipment.*
- *Before starting work, visually inspect the high-voltage components in the areas involved.*
- *Before working in the engine compartment, visually inspect the power and control electronics for electric drive - JX1- , electric drive motor - V141- , air conditioner compressor - V470- and high-voltage wiring.*
- *Before working on the vehicle underbody, visually inspect the high-voltage wiring and covers.*
- *Before working on the rear section of the vehicle, visually inspect the high-voltage wiring and the electro-box with the maintenance connector for high-voltage system - TW - .*
- *Visually inspect all potential equalisation lines.*

Check the following when making the visual inspection:

- *There must be no external damage on any component.*
- *The insulation of the high-voltage wiring and potential equalisation lines must not be damaged.*
- *There must be no unusual deformation of the high-voltage wiring.*
- *All high-voltage components must be identified by a red warning sticker.*

WARNING

Working on vehicles with high-voltage wiring:

- *Do not support yourself or tools on high-voltage wiring or associated components --> this can damage the insulation.*
- *High-voltage wiring must not be excessively bent or kinked --> this can damage the insulation.*
- *The round high-voltage connectors are colour-coded with an external coloured ring and are provided with mechanical coding or guide lugs. It is important to observe this coding when joining up the round high-voltage connectors, otherwise the connectors can be damaged.*

Removing

– Unplug electrical connector at engine speed sender - G28- -2- using assembly tool - T10118- .

Note

To release electrical connector without assembly tool - T10118- , press connector on engine speed sender in with a screwdriver and at the same time lift release tab with a thin wire hook.

– Remove securing bolt -1-.

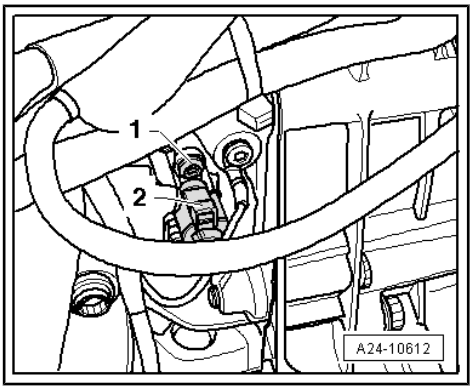

Installing

Install in reverse order.

Tightening torques

♦ ⇒ “1.1 Exploded view - ignition system”, page 309