Workshop Manual

Audi A8 2010 ➤

Communication

Edition 06.2013

Protected by copyright. Copying for private or commercial purposes, in part or in whole, is not permitted unless authorised by AUDI AG. AUDI AG does not guarantee or accept any liability with respect to the correctness of information in this document. Copyright by AUDI AG.

List of Workshop Manual Repair GroupsList of Workshop Manual Repair GroupsList of Workshop Manual Repair Groups

Repair Group

91 - Communication

Protected by copyright. Copying for private or commercial purposes, in part or in whole, is not permitted unless authorised by AUDI AG. AUDI AG does not guarantee or accept any liability with respect to the correctness of information in this document. Copyright by AUDI AG.

Technical information should always be available to the foremen and mechanics, because their careful and constant adherence to the instructions is essential to ensure vehicle road-worthiness and safety. In addition, the normal basic safety precautions for working on motor vehicles must, as a matter of course, be observed.

All rights reserved.
No reproduction without prior agreement from publisher.

Copyright © 2013 Audi AG, Ingolstadt

D3E8026753E

Contents

91 - Communication . . . 1
1 Infotainment system . . . 1
1.1 Layout - infotainment system . . . 1
1.2 Overview of fitting locations - infotainment system . . . 7
1.3 Removing and installing control unit 1 for information electronics J794 . . . 14
1.4 Removing and installing infotainment system display . . . 17
1.5 Removing and installing multimedia system operating unit E380 . . . 21
1.6 Pin assignment . . . 24
2 Sound system . . . 40
2.1 Layout - sound system . . . 40
2.2 Overview of fitting locations - sound system . . . 44
2.3 Overview of fitting locations - ANC microphones . . . 51
2.4 Removing and installing digital sound package control unit/amplifier . . . 52
2.5 Removing and installing rear treble loudspeakers R14 / R16 . . . 63
2.6 Removing and installing front treble loudspeakers R20 / R22 . . . 64
2.7 Removing and installing rear mid-range loudspeaker . . . 66
2.8 Removing and installing front mid-range loudspeakers . . . 67
2.9 Removing and installing rear mid-range and bass loudspeakers . . . 68
2.10 Removing and installing rear bass loudspeakers R15 / R17 . . . 68
2.11 Removing and installing front bass loudspeakers R21 / R23 . . . 69
2.12 Removing and installing subwoofer R211 . . . 70
2.13 Removing and installing effect loudspeakers . . . 72
2.14 Removing and installing centre loudspeaker . . . 73
2.15 Removing and installing ANC microphones R142 / R143 / R144 / R145 . . . 74
2.16 Pin assignment . . . 75
3 Aerial systems . . . 81
3.1 Layout - aerial systems . . . 81
3.2 Overview of fitting locations - aerial systems . . . 81
3.3 Removing and installing aerial amplifiers . . . 83
3.4 Removing and installing traffic data aerial . . . 86
3.5 Removing and installing roof aerial . . . 87
3.6 Pin assignment for aerial amplifier . . . 88
4 Radio . . . 90
4.1 Removing and installing radio . . . 90
4.2 Pin assignment . . . 94
5 DVD/CD changer . . . 98
5.1 Pin assignment . . . 98
5.2 Removing and installing DVD changer . . . 98
6 Telephone system . . . 101
6.1 Layout - telephone . . . 101
6.2 Overview of fitting locations - telephone system . . . 105
6.3 Exploded view - microphone unit . . . 107
6.4 Removing and installing microphone unit in front roof module R164 . . . 108
6.5 Removing and installing aerial amplifier for mobile telephone R86 . . . 109
6.6 Removing and installing telephone bracket R126 . . . 110
6.7 Pin assignment . . . 112
7 Navigation system . . . 120
7.1 Layout - navigation system . . . 120
7.2 Overview of fitting locations - navigation system . . . 123
7.3 Pin assignment . . . 126
7.4 Removing and installing chip card reader control unit . . . 130
8 TV system . . . 132

Protected by copyright. Copying for private or commercial purposes, in part or in whole, is not permitted unless authorised by AUDI AG. AUDI AG does not guarantee or accept any liability with respect to the correctness of information in this document. Copyright by AUDI AG.

8.1 Layout - TV system . . . 132
8.2 Overview of fitting locations - TV system . . . 138
8.3 Pin assignment . . . 142
8.4 Removing and installing TV tuner . . . 147
8.5 Removing and installing TV card reader . . . 150

9 Reversing camera system . . . 152
9.1 Layout - reversing camera system . . . 152
9.2 Overview of fitting locations - reversing camera system . . . 154
9.3 Removing and installing reversing camera R189 . . . 155
9.4 Calibrating reversing camera system . . . 156
9.5 Removing and installing reversing camera system control unit J772 . . . 162
9.6 Connectors on reversing camera system control unit J772 . . . 164

10 Multi-function steering wheel . . . 166
10.1 Layout - multi-function steering wheel . . . 166
10.2 Exploded view - multi-function steering wheel . . . 166
10.3 Removing and installing multifunction buttons in steering wheel E441 / E440 . . . 167
10.4 Removing and installing tiptronic switches in steering wheel E439 / E438 . . . 170

11 Voice control system . . . 171
11.1 Layout - voice control system . . . 171
11.2 Removing and installing voice control system . . . 172

12 Connection for external audio sources . . . 173
12.1 Layout - external audio sources . . . 173
12.2 Connectors on connection for external multimedia devices . . . 174
12.3 Removing and installing connection for external audio sources R199 . . . 175

13 Rear Seat Entertainment system (RSE) . . . 177
13.1 Overview - Rear Seat Entertainment system . . . 177
13.2 Overview of fitting locations - Rear Seat Entertainment system . . . 177

14 Night vision system . . . 179
14.1 Overview of fitting locations - night vision system . . . 179
14.2 Removing and installing camera for night vision system . . . 181
14.3 Removing and installing control unit for night vision system . . . 184

15 Overhead view camera . . . 186
15.1 Layout - overhead view camera system . . . 186
15.2 Overview of fitting locations - overhead view camera . . . 189
15.3 Removing and installing control unit for overhead view camera J928 . . . 191
15.4 Removing and installing rear overhead view camera R246 . . . 193
15.5 Removing and installing front overhead view camera R243 . . . 194
15.6 Calibrating overhead view camera system . . . 195
15.7 Pin assignment for control unit for overhead view camera J928 . . . 212

Protected by copyright. Copying for private or commercial purposes, in part or in whole, is not permitted unless authorised by AUDI AG. AUDI AG does not guarantee or accept any liability with respect to the correctness of information in this document. Copyright by AUDI AG.

91 – Communication

1 Infotainment system

(ARL003392; Edition 06.2013)

⇒ “1.1 Layout - infotainment system”, page 1

⇒ “1.2 Overview of fitting locations - infotainment system”, page 7

⇒ “1.3 Removing and installing control unit 1 for information electronics J794 ”, page 14

⇒ “1.4 Removing and installing infotainment system display”, page 17

⇒ “1.5 Removing and installing multimedia system operating unit E380 ”, page 21

⇒ “1.6 Pin assignment”, page 24

1.1 Layout - infotainment system

Protected by copyright. Copying, distribution or data transmission to third parties, in whole or in part, is not permitted unless authorised by AUDI AG. AUDI AG does not guarantee or accept any liability with respect to the correctness of information. Copyright by AUDI AG.

⇒ “1.1.1 Layout - infotainment system”, page 1

⇒ “1.1.2 Layout - infotainment system (USA)”, page 3

⇒ “1.1.3 Layout - infotainment system (Japan)”, page 5

1.1.1 Layout - infotainment system

The MMI infotainment system incorporates the following functions: control unit, telephone, mobile phone pre-installation, connection for external audio sources, DVD drive, navigation (with hard disk) and voice response system. These functions are integrated in a single device, control unit 1 for information electronics - J794- .

The radio - R- / DVD changer - R161- / TV tuner - R78- and the digital sound package control unit - J525- are externally linked to the system via the MOST bus. The basic sound systems are directly activated by the radio - R- .

MMI maximum equipment

- Control unit 1 for information electronics - J794- in dash panel contains CD player / DVD player / navigation system / Bluetooth car phone / speech dialogue system / SD memory card reader
- Internal hard drive (HDD) to store navigation data and MP3 files
- Multimedia system operating unit - E380- in centre console (front)
- Display unit for front information display and operating unit control unit - J685- in dash panel (centre)
- DVD changer - R161- (6G0) in glove box
- Connection for external audio sources - R199- (interface) in centre console storage compartment
- Digital sound package control unit - J525- located in luggage compartment (rear left)
- Sound systems: Standard/BOSE/Bang & Olufsen (9VD/8RY/8RF)
- Radio - R- in luggage compartment on back panel (right-side)/ in luggage compartment recess (left-side)

- Digital radio - R147- (QV3) integrated in radio - R-
- TV tuner - R78- (QU6/QU7) in luggage compartment on back panel (left-side)/in luggage compartment recess (left-side)
- Mobile phone pre-installation (9ZF) - fitted optionally
- Bluetooth car phone (9ZW) - fitted optionally
- Bluetooth hands-free system (9ZX) - fitted optionally
- Multi-function steering wheel (fitted optionally)
- Speech dialogue system

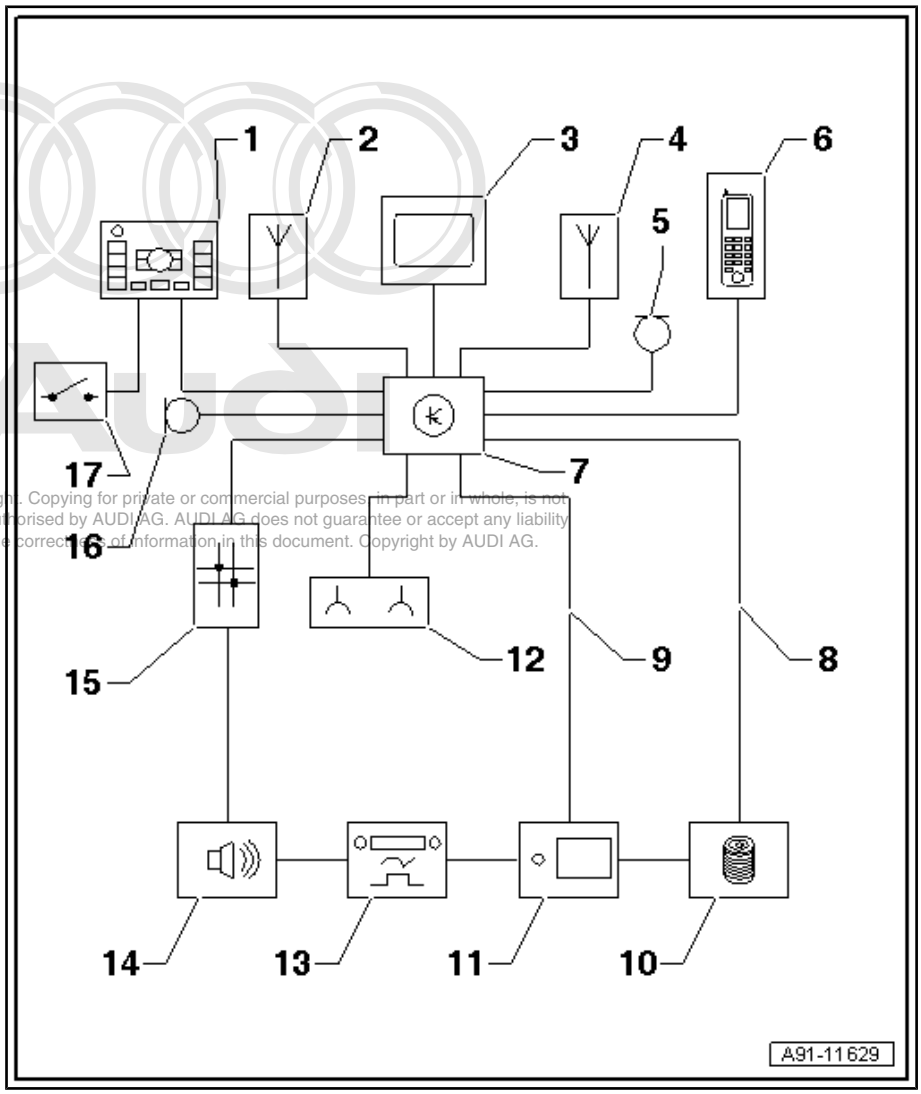

1 - Multimedia system operating unit - E380- in centre console (front)

2 - Roof aerial - R216-

3 - Display unit for front information display and operating unit control unit - J685- in dash panel (centre)

4 - Roof aerial - R216-

5 - Microphone unit in front roof module - R164- (front left microphone - R140-) in front interior light - W1-

6 - Telephone bracket - R126- in storage box in centre console

7 - Control unit 1 for information electronics - J794- in dash panel

8 - MOST bus

9 - FBAS wire

10 - DVD changer - R161- in glove box

11 - TV tuner - R78- in luggage compartment on back panel (left-side)/in luggage compartment recess (left-side)

12 - Connection for external audio sources - R199- (interface) in centre console storage compartment

13 - Radio - R- in luggage compartment on back panel (right-side)/in luggage compartment recess (left-side)

14 - Digital sound package control unit - J525- in luggage compartment on back panel (left-side)

15 - Data bus diagnostic interface - J533- in luggage compartment on back panel (right-side)

16 - Microphone unit in front roof module - R164- (front right microphone - R141-) in front interior light - W1-

17 - Display unit button - E506- in dash panel

Protected by copyright. Copying for private or commercial purposes, in part or in whole, is not permitted unless authorised by AUDI AG. AUDI AG does not guarantee or accept any liability with respect to the correctness of information in this document. Copyright by AUDI AG.

The exchange of data in the MMI systems takes place via the MOST bus.

The connection to other data bus systems in the vehicle is handled by the data bus diagnostic interface - J533- .

Fault finding is performed via the “Guided Fault Finding” ⇒ Vehicle diagnostic tester.

Notes on MOST bus

In addition to the CAN bus, the fibre optic data bus “MOST bus” is used.

A fibre optic cable is used as the “connecting cable”. The fibre optic cables are fitted in corrugated tubes for protection.

Renew the complete fibre optic cable whenever possible.

The end faces of the connectors must not become dirty.

If connectors are unplugged: fit a protective cap for cable connector - VAS 6223/9- .

When installing the fibre optic cables, be sure to observe the minimum bending radius of 25 mm. Do not crush or kink the fibre optic cables.

Repairing fibre optic cables ⇒ Electrical system; Rep. gr. 97 ; Fibre optic cables .

Protected by copyright. Copying for private or commercial purposes, in part or in whole, is not permitted unless authorised by AUDI AG. AUDI AG does not guarantee or accept any liability with respect to the correctness of information in this document. Copyright by AUDI AG.

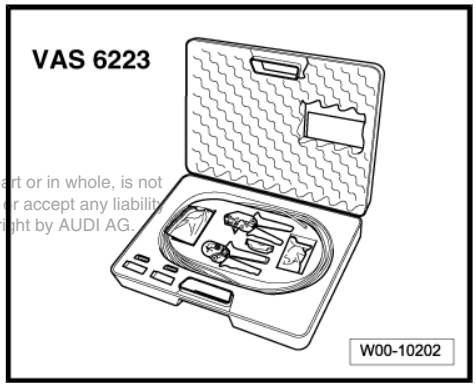

1.1.2 Layout - infotainment system (USA)

The MMI infotainment system incorporates the following functions: control unit, connection for external audio sources, DVD drive, navigation (with hard disk) and voice response system. These functions are integrated in a single device, control unit 1 for information electronics - J794- .

The radio - R- / DVD changer - R161- and the digital sound package control unit - J525- are externally linked to the system via the MOST bus. The basic sound systems are directly activated by the radio - R- .

MMI maximum equipment

- Control unit 1 for information electronics - J794- in dash panel contains CD player / DVD player / navigation system / voice control system / SD memory card readers
- Internal hard drive (HDD) to store navigation data and MP3 files
- Multimedia system operating unit - E380- in centre console (front)
- Display unit for front information display and operating unit control unit - J685- in dash panel (centre)
- DVD changer - R161- (6G0) in glove box
- Connection for external audio sources - R199- (interface) in centre console storage compartment
- Digital sound package control unit - J525- in luggage compartment on back panel (left-side)
- Sound systems: BOSE/Bang & Olufsen (8RY/8RF)
- Radio - R- in luggage compartment on back panel (right-side)/ in luggage compartment recess (left-side)
- Satellite radio - R146- integrated in radio - R-

- Bluetooth hands-free system (9ZX) - fitted optionally
- Multi-function steering wheel (fitted optionally)

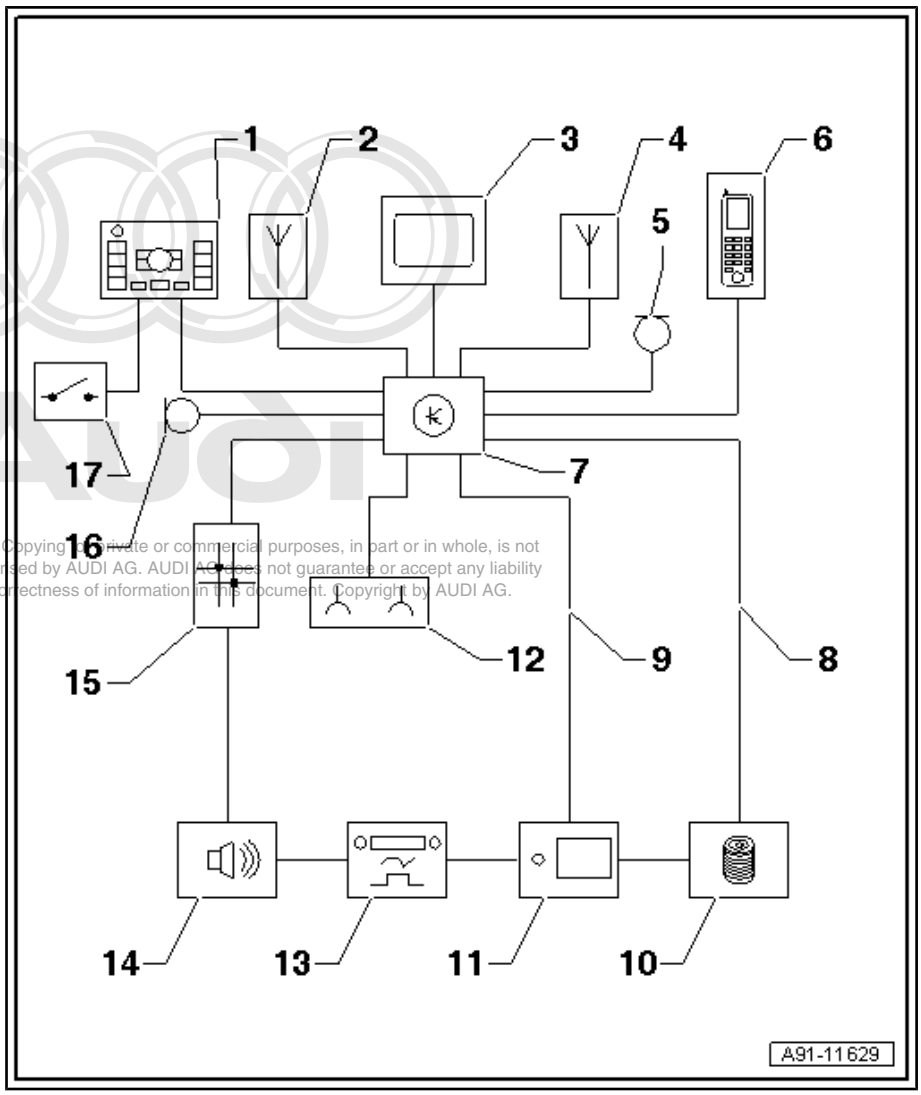

1 - Multimedia system operating unit - E380- in centre console (front)

2 - Roof aerial - R216-

3 - Display unit for front information display and operating unit control unit - J685- in dash panel (centre)

4 - Not fitted

5 - Microphone unit in front roof module - R164- (front left microphone - R140-) in front interior light - W1-

6 - Not fitted

7 - Control unit 1 for information electronics - J794- in dash panel

Protected by copyright. Copying for private or commercial purposes, in part or in whole, is not permitted unless authorised by AUDI AG. AUDI AG does not guarantee or accept any liability with respect to the correctness of information in this document. Copyright by AUDI AG.

8 - MOST bus

9 - FBAS wire

10 - DVD changer - R161- in glove box

11 - Not fitted

12 - Connection for external audio sources - R199- (interface) in centre console storage compartment

13 - Radio - R- in luggage compartment on back panel (right-side)/in luggage compartment recess (left-side)

14 - Digital sound package control unit - J525- in luggage compartment on back panel (left-side)

15 - Data bus diagnostic interface - J533- in luggage compartment on back panel (right-side)

16 - Microphone unit in front roof module - R164- (front right microphone - R141-) in front interior light - W1-

17 - Display unit button - E506- in dash panel

The exchange of data in the MMI systems takes place via the MOST bus.

The connection to other data bus systems in the vehicle is handled by the data bus diagnostic interface - J533- .

Fault finding is performed via the “Guided Fault Finding” ⇒ Vehicle diagnostic tester.

Notes on MOST bus

In addition to the CAN bus, the fibre optic data bus “MOST bus” is used.

A fibre optic cable is used as the “connecting cable”. The fibre optic cables are fitted in corrugated tubes for protection.

Renew the complete fibre optic cable whenever possible.

The end faces of the connectors must not become dirty.

If connectors are unplugged: fit a protective cap for cable connector - VAS 6223/9- .

When installing the fibre optic cables, be sure to observe the minimum bending radius of 25 mm. Do not crush or kink the fibre optic cables.

Repairing fibre optic cables ⇒ Electrical system; Rep. gr. 97 ; Fibre optic cables .

1.1.3 Layout - infotainment system (Japan)

The MMI infotainment system incorporates the following functions: control unit, connection for external audio sources, DVD drive, navigation (with hard disk) and voice response system. These functions are integrated in a single device, control unit 1 for information electronics - J794- .

The radio - R- / DVD changer - R161- / TV tuner - R78- and the digital sound package control unit - J525- are externally linked to the system via the MOST bus. The basic sound systems are directly activated by the radio - R- .

MMI maximum equipment

- Control unit 1 for information electronics - J794- in dash panel contains CD player / DVD player / navigation system / voice control system / SD memory card readers
- Internal hard drive (HDD) to store navigation data and MP3 files
- Multimedia system operating unit - E380- in centre console (front)
- Display unit for front information display and operating unit control unit - J685- in dash panel (centre)
- DVD changer - R161- (6G0) in glove box
- Connection for external audio sources - R199- (interface) in centre console storage compartment
- Digital sound package control unit - J525- in luggage compartment on back panel (left-side)
- Sound systems: BOSE/Bang & Olufsen (8RY/8RF)
- Radio - R- in luggage compartment on back panel (right-side)/ in luggage compartment recess (left-side)
- TV tuner - R78- (QU6/QU7) in luggage compartment on back panel (left-side)/in luggage compartment recess (left-side)
- Bluetooth hands-free system (9ZX) - fitted optionally
- Multi-function steering wheel (fitted optionally)

Protected by copyright. Copying for private or commercial purposes, in part or in whole, is not permitted unless authorised by AUDI AG. AUDI AG does not guarantee or accept any liability with respect to the correctness of information in this document. Copyright by AUDI AG.

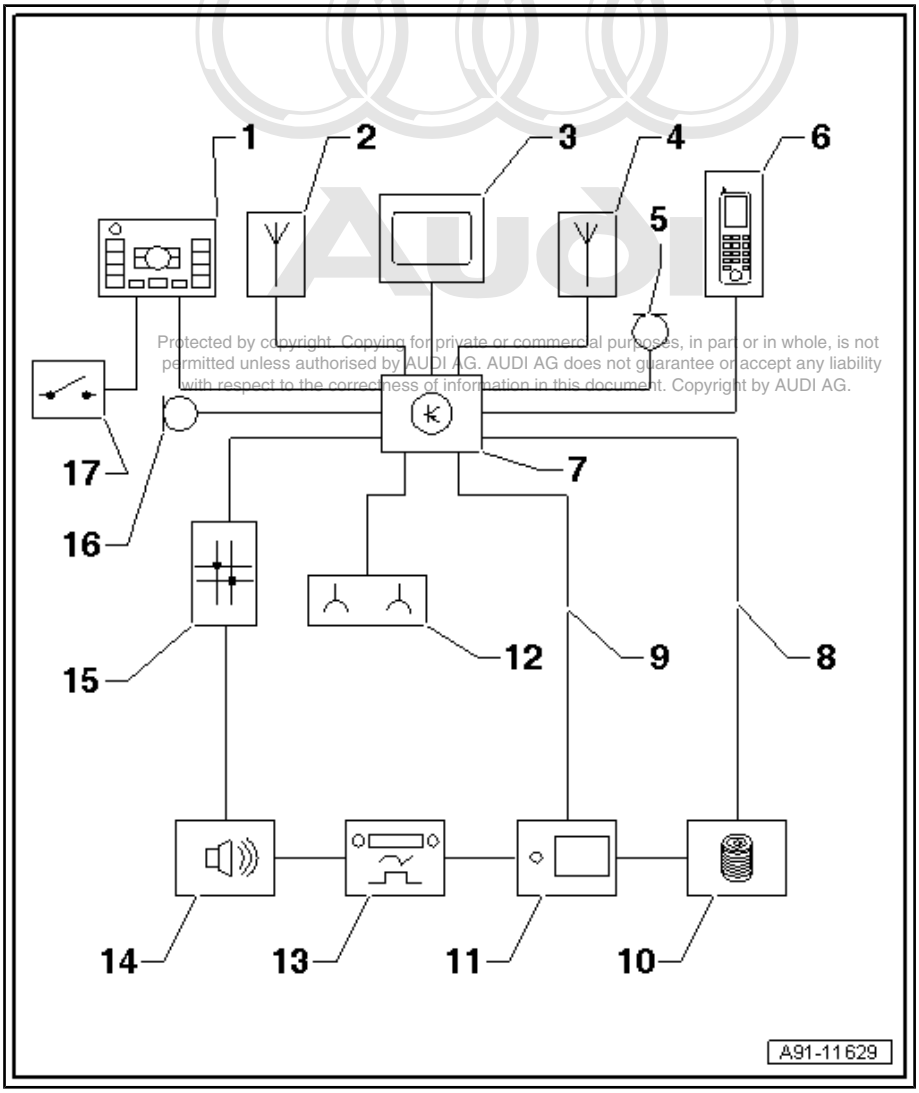

Protected by copyright. Copying for private or commercial purposes, in part or in whole, is not permitted unless authorised by AUDI AG. AUDI AG does not guarantee or accept any liability with respect to the correctness of information in this document. Copyright by AUDI AG.

1 - Multimedia system operating unit - E380- in centre console (front)

2 - Roof aerial - R216-

3 - Display unit for front information display and operating unit control unit - J685- in dash panel (centre)

4 - Not fitted

5 - Microphone unit in front roof module - R164- (front left microphone - R140-) in front interior light - W1-

6 - Not fitted

7 - Control unit 1 for information electronics - J794- in dash panel

8 - MOST bus

9 - FBAS wire

10 - DVD changer - R161- in glove box

11 - TV tuner - R78- in luggage compartment on back panel (left-side)/in luggage compartment recess (left-side)

12 - Connection for external audio sources - R199- (interface) in centre console storage compartment

13 - Radio - R- in luggage compartment on back panel (right-side)/in luggage compartment recess (left-side)

14 - Digital sound package control unit - J525- in luggage compartment on back panel (left-side)

15 - Data bus diagnostic interface - J533- in luggage compartment on back panel (right-side)

16 - Microphone unit in front roof module - R164- (front right microphone - R141-) in front interior light - W1-

17 - Display unit button - E506- in dash panel

The exchange of data in the MMI systems takes place via the MOST bus.

The connection to other data bus systems in the vehicle is handled by the data bus diagnostic interface - J533- .

Fault finding is performed via the “Guided Fault Finding” ⇒ Vehicle diagnostic tester.

Notes on MOST bus

In addition to the CAN bus, the fibre optic data bus “MOST bus” is used.

A fibre optic cable is used as the “connecting cable”. The fibre optic cables are fitted in corrugated tubes for protection.

Renew the complete fibre optic cable whenever possible.

The end faces of the connectors must not become dirty.

If connectors are unplugged: fit a protective cap for cable connector - VAS 6223/9- .

When installing the fibre optic cables, be sure to observe the minimum bending radius of 25 mm. Do not crush or kink the fibre optic cables.

Repairing fibre optic cables ⇒ Electrical system; Rep. gr. 97 ; Fibre optic cables .

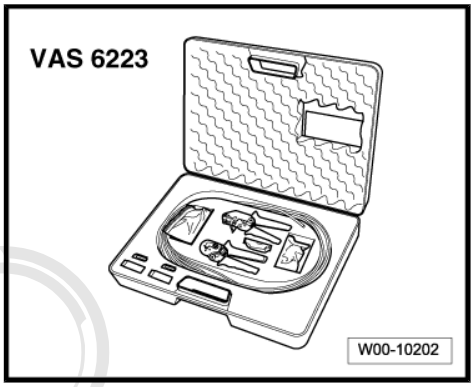

1.2 Overview of fitting locations - infotainment system

⇒ “1.2.1 Overview of fitting locations - infotainment system, up to model year 2013, including vehicles with high-voltage electrical system”, page 7

⇒ “1.2.2 Overview of fitting locations - infotainment system, up to model year 2014, excluding vehicles with high-voltage electrical system”, page 9

⇒ “1.2.3 Overview of fitting locations - infotainment system, USA, up to model year 2013, including vehicles with high-voltage electrical system”, page 10

⇒ “1.2.4 Overview of fitting locations - infotainment system, up to model year 2014, excluding vehicles with high-voltage electrical system”, page 11

⇒ “1.2.5 Overview of fitting locations - infotainment system, Japan, up to model year 2013, including vehicles with high-voltage electrical system”, page 12

⇒ “1.2.6 Overview of fitting locations - infotainment system, Japan, up to model year 2014, excluding vehicles with high-voltage electrical system”, page 13

Protected by copyright. Copying for private or commercial purposes, in part or in whole, is not permitted unless authorised by AUDI AG. AUDI AG does not guarantee or accept any liability with respect to the correctness of information in this document. Copyright by AUDI AG.

1.2.1 Overview of fitting locations - infotainment system, up to model year 2013, including vehicles with high-voltage electrical system

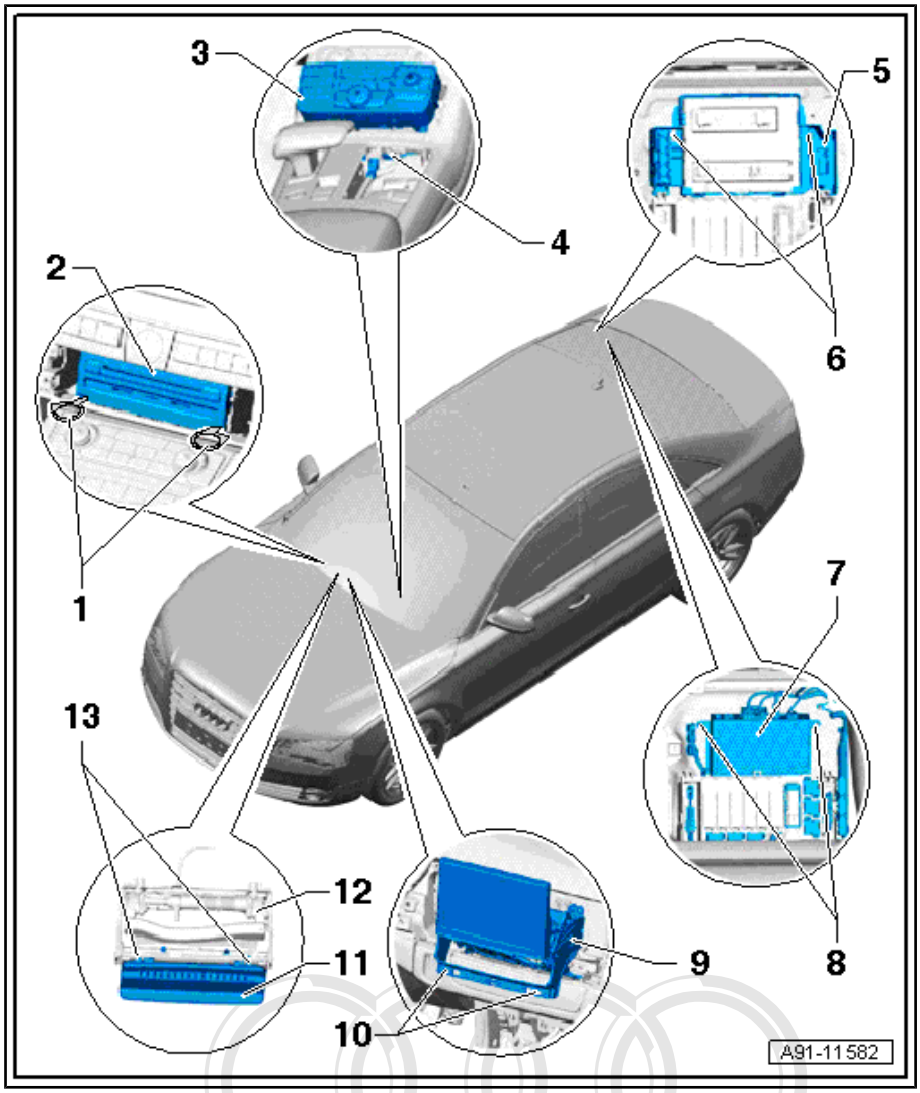

1 - Radio release tool - T10057-

2 - Control unit 1 for information electronics - J794-

- Pin assignment ⇒ page 24
- Removing and installing ⇒ page 14

3 - Multimedia system operating unit - E380-

- Pin assignment ⇒ page 36
- Removing and installing ⇒ page 21
- With touchpad control unit - J929-
- Renewing touchpad control unit - J929- ⇒ page 21

4 - Retainer

5 - Bracket

6 - Nut

- 2x
- 4 Nm

7 - Radio - R-

- Pin assignment ⇒ page 94
- Removing and installing ⇒ page 90

8 - Stud

9 - Display mounting

10 - Bolt

- 2x
- 3 Nm

11 - Display unit for front information display and operating unit control unit - J685-

- Pin assignment ⇒ page 37
- Removing and installing ⇒ page 17

12 - Display mounting

13 - Bolt

- 2x
- 1.5 Nm

Protected by copyright. Copying for private or commercial purposes, in part or in whole, is not permitted unless authorised by AUDI AG. AUDI AG does not guarantee or accept any liability with respect to the correctness of information in this document. Copyright by AUDI AG.

1.2.2 Overview of fitting locations - infotainment system, up to model year 2014, excluding vehicles with high-voltage electrical system

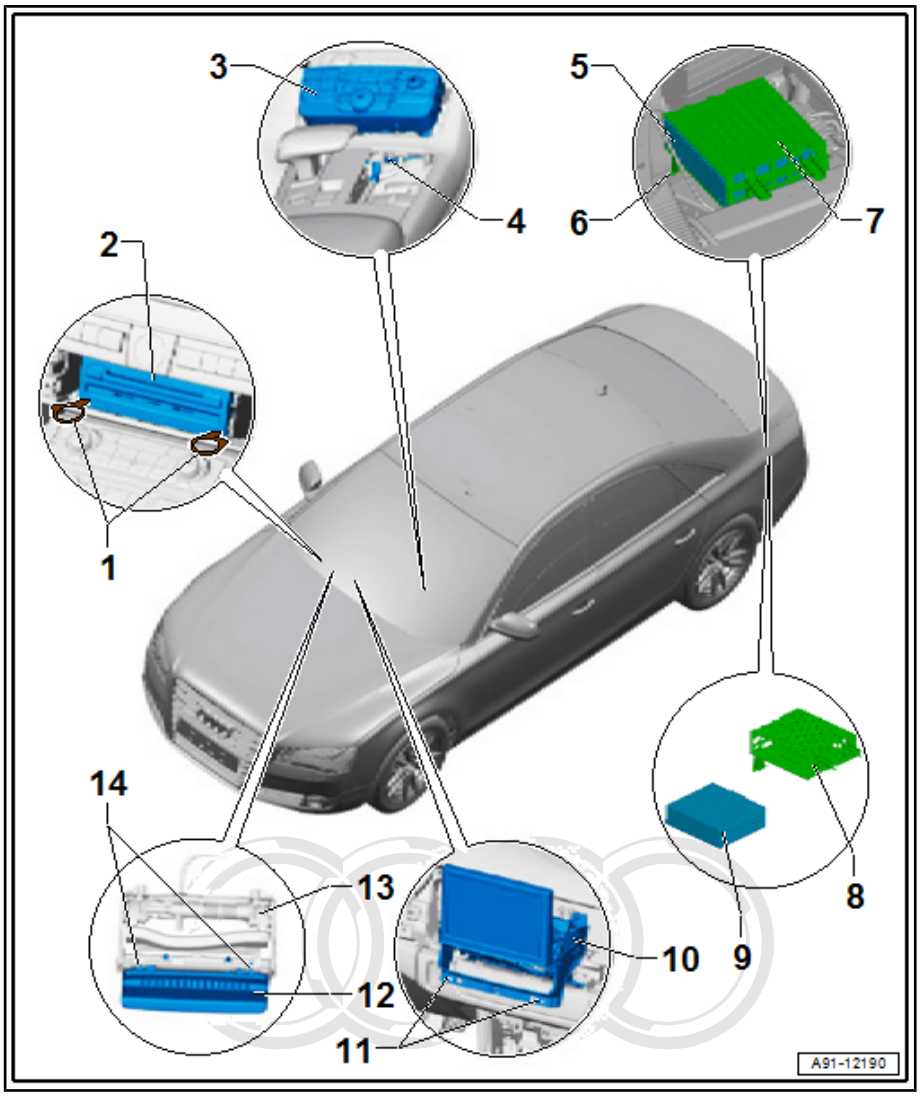

1 - Radio release tool - T10057-

2 - Control unit 1 for information electronics - J794-

- ❑ Pin assignment ⇒ page 24
- ❑ Removing and installing ⇒ page 14

3 - Multimedia system operating unit - E380-

- ❑ Pin assignment ⇒ page 36
- ❑ Removing and installing ⇒ page 21
- ❑ With touchpad control unit - J929-
- ❑ Renewing touchpad control unit - J929- ⇒ page 21

4 - Retainer

5 - Radio - R-

6 - Stud

- ❑ Retainer for holder radio - R-

7 - Holder radio - R-

8 - Holder radio - R-

9 - Radio - R-

- ❑ Pin assignment ⇒ page 94
- ❑ Removing and installing ⇒ page 92

10 - Display mounting

11 - Bolt

- ❑ 2x
- ❑ 3 Nm

12 - Display unit for front information display and operating unit control unit - J685-

- ❑ Pin assignment ⇒ page 37
- ❑ Removing and installing ⇒ page 17

13 - Display mounting

14 - Bolt

- ❑ 2x
- ❑ 1.5 Nm

Protected by copyright. Copying for private or commercial purposes, in part or in whole, is not permitted unless authorised by AUDI AG. AUDI AG does not guarantee or accept any liability with respect to the correctness of information in this document. Copyright by AUDI AG.

1.2.3 Overview of fitting locations - infotainment system, USA, up to model year 2013, including vehicles with high-voltage electrical system

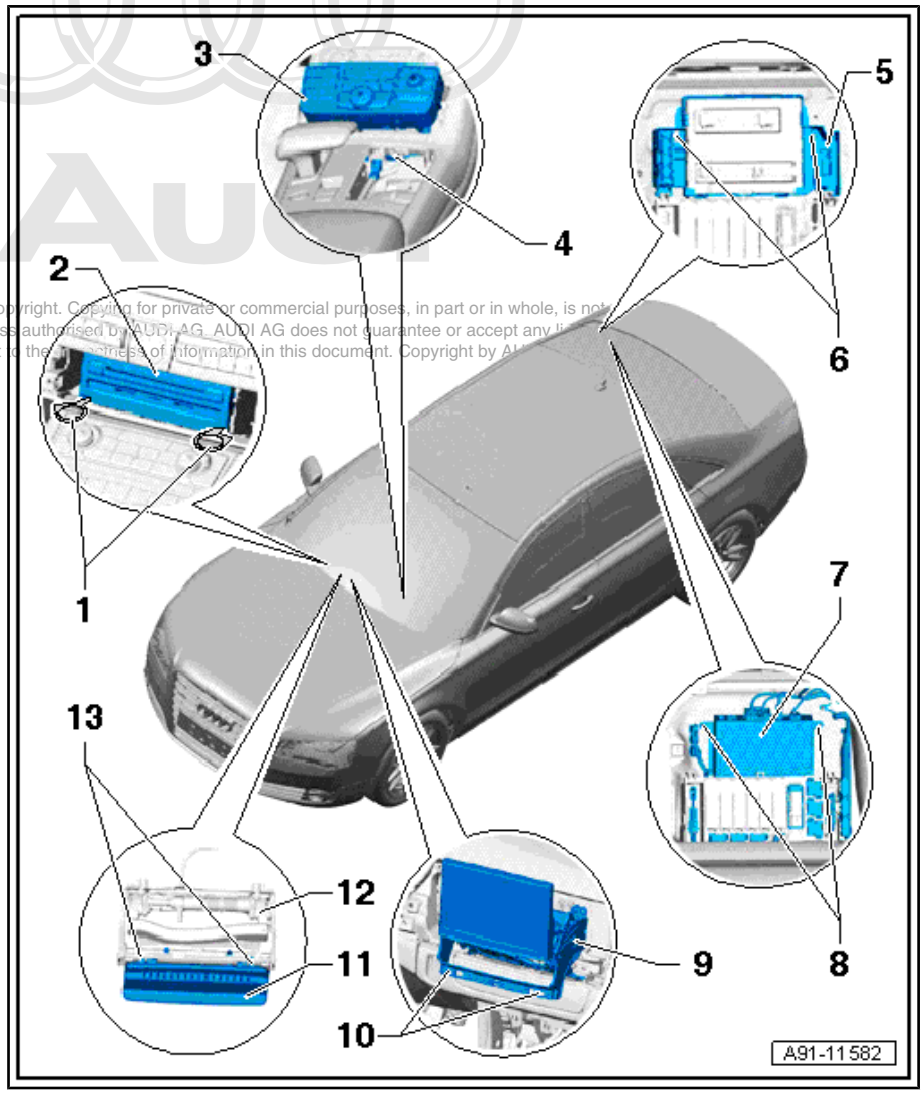

Protected by copyright. Copying for private or commercial purposes, in part or in whole, is not permitted unless authorised by AUDI AG. AUDI AG does not guarantee or accept any liability with respect to the correctness of information in this document. Copyright by AUDI AG.

1 - Radio release tool - T10057-

2 - Control unit 1 for information electronics - J794-

- Pin assignment ⇒ page 27
- Removing and installing ⇒ page 14

3 - Multimedia system operating unit - E380-

- Pin assignment ⇒ page 36
- Removing and installing ⇒ page 21
- With touchpad control unit - J929-
- Renewing touchpad control unit - J929- ⇒ page 21

4 - Retainer

5 - Bracket

6 - Nut

- 2x
- 4 Nm

7 - Radio - R-

- Pin assignment ⇒ page 96
- Removing and installing ⇒ page 90

8 - Stud

9 - Display mounting

10 - Bolt

- 2x
- 3 Nm

11 - Display unit for front information display and operating unit control unit - J685-

- Pin assignment ⇒ page 37
- Removing and installing ⇒ page 17

12 - Display mounting

13 - Bolt

- 2x
- 1.5 Nm

1.2.4 Overview of fitting locations - infotainment system, up to model year 2014, excluding vehicles with high-voltage electrical system

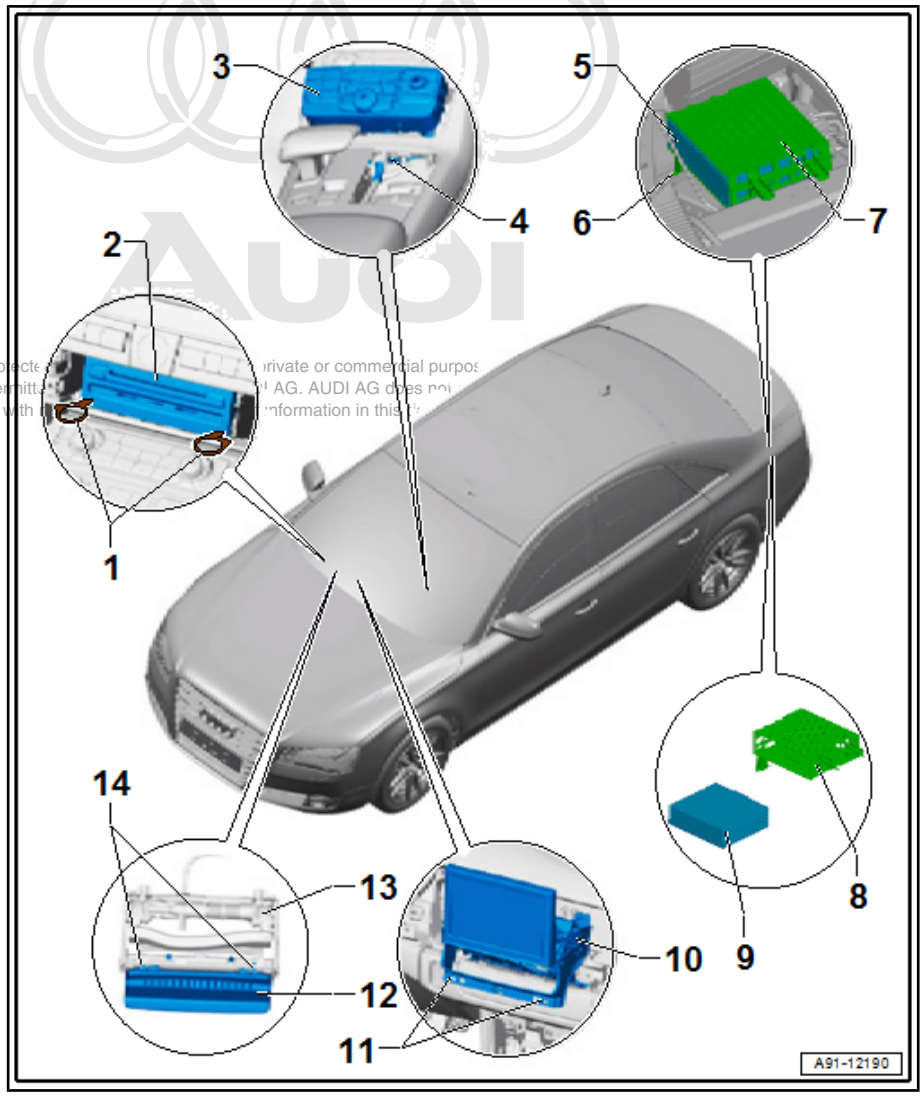

1 - Radio release tool - T10057-

2 - Control unit 1 for information electronics - J794-

- ❑ Pin assignment ⇒ page 27
- ❑ Removing and installing ⇒ page 14

3 - Multimedia system operating unit - E380-

- ❑ Pin assignment ⇒ page 36
- ❑ Removing and installing ⇒ page 21
- ❑ With touchpad control unit - J929-
- ❑ Renewing touchpad control unit - J929- ⇒ page 21

4 - Retainer

5 - Radio - R-

6 - Stud

- ❑ Retainer for holder radio - R-

7 - Holder radio - R-

8 - Holder radio - R-

9 - Radio - R-

- ❑ Pin assignment ⇒ page 96
- ❑ Removing and installing ⇒ page 92

10 - Display mounting

11 - Bolt

- ❑ 2x
- ❑ 3 Nm

12 - Display unit for front information display and operating unit control unit - J685-

- ❑ Pin assignment ⇒ page 37
- ❑ Removing and installing ⇒ page 17

13 - Display mounting

14 - Bolt

- ❑ 2x
- ❑ 1.5 Nm

1.2.5 Overview of fitting locations - infotainment system, Japan, up to model year 2013, including vehicles with high-voltage electrical system

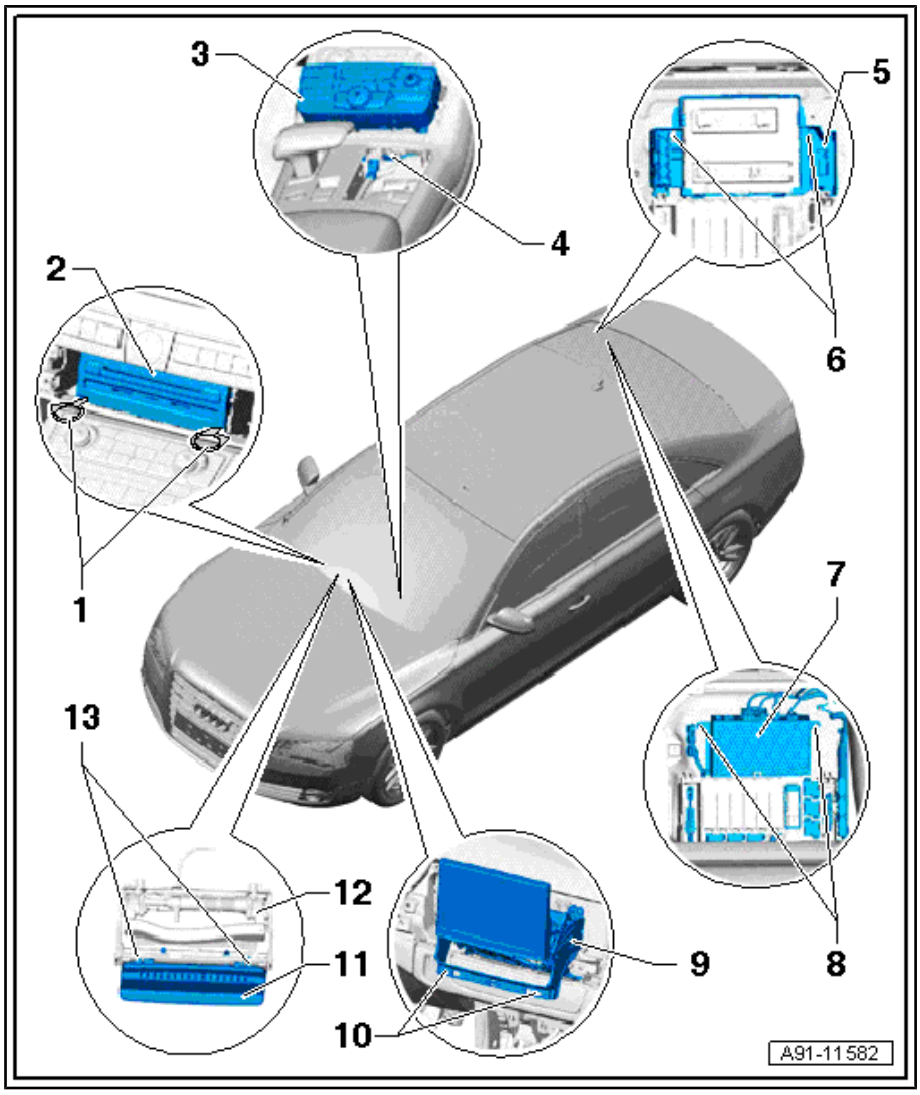

1 - Radio release tool - T10057-

2 - Control unit 1 for information electronics - J794-

- Pin assignment ⇒ page 30
- Removing and installing ⇒ page 14

3 - Multimedia system operating unit - E380-

- Pin assignment ⇒ page 36
- Removing and installing ⇒ page 21
- With touchpad control unit - J929-
- Renewing touchpad control unit - J929- ⇒ page 21

4 - Retainer

5 - Bracket

6 - Nut

- 2x
- 4 Nm

7 - Radio - R-

- Pin assignment ⇒ page 94
- Removing and installing ⇒ page 90

8 - Stud

9 - Display mounting

10 - Bolt

- 2x
- 3 Nm

11 - Display unit for front information display and operating unit control unit - J685-

- Pin assignment ⇒ page 37
- Removing and installing ⇒ page 17

12 - Display mounting

13 - Bolt

- 2x
- 1.5 Nm

Protected by copyright. Copying for private or commercial purposes, in part or in whole, is not permitted unless authorised by AUDI AG. AUDI AG does not guarantee or accept any liability with respect to the correctness of information in this document. Copyright by AUDI AG.

1.2.6 Overview of fitting locations - infotainment system, Japan, up to model year 2014, excluding vehicles with high-voltage electrical system

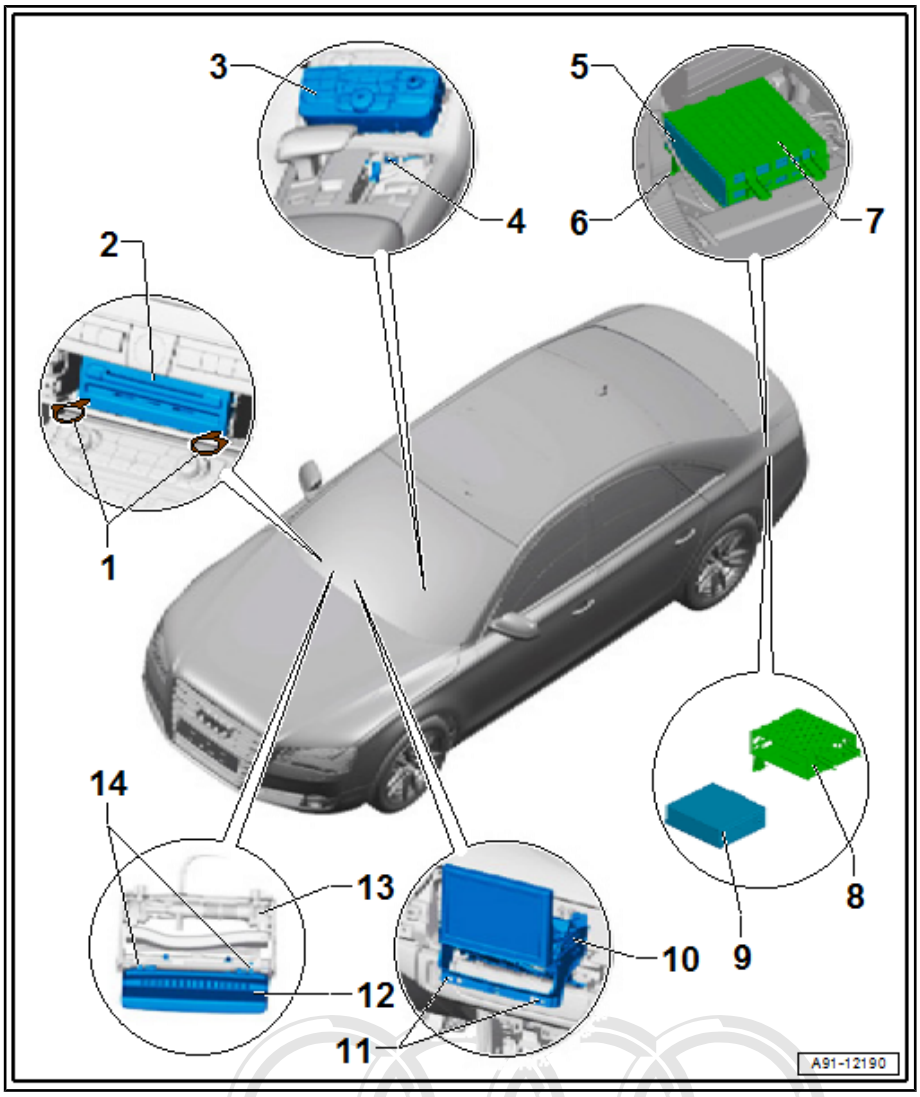

1 - Radio release tool - T10057-

2 - Control unit 1 for information electronics - J794-

- ❑ Pin assignment ⇒ page 30
- ❑ Removing and installing ⇒ page 14

3 - Multimedia system operating unit - E380-

- ❑ Pin assignment ⇒ page 36
- ❑ Removing and installing ⇒ page 21
- ❑ With touchpad control unit - J929-
- ❑ Renewing touchpad control unit - J929- ⇒ page 21

4 - Retainer

5 - Radio - R-

6 - Stud

- ❑ Retainer for holder radio - R-

7 - Holder radio - R-

8 - Holder radio - R-

9 - Radio - R-

- ❑ Pin assignment ⇒ page 94
- ❑ Removing and installing ⇒ page 92

10 - Display mounting

11 - Bolt

- ❑ 2x
- ❑ 3 Nm

12 - Display unit for front information display and operating unit control unit - J685-

- ❑ Pin assignment ⇒ page 37
- ❑ Removing and installing ⇒ page 17

13 - Display mounting

14 - Bolt

- ❑ 2x
- ❑ 1.5 Nm

Protected by copyright. Copying for private or commercial purposes, in part or in whole, is not permitted unless authorised by AUDI AG. AUDI AG does not guarantee or accept any liability with respect to the correctness of information in this document. Copyright by AUDI AG.

1.3 Removing and installing control unit 1 for information electronics - J794-

⇒ “1.3.1 Removing and installing control unit 1 for information electronics J794 ”, page 14

⇒ “1.3.2 Removing and installing control unit 2 for information electronics J829 ”, page 16

1.3.1 Removing and installing control unit 1 for information electronics - J794-

The control unit 1 for information electronics - J794- -1- is located in the dash panel.

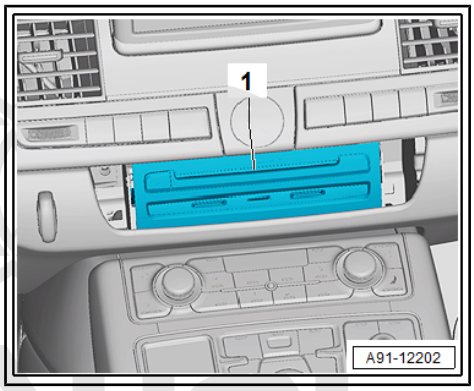

Special tools and workshop equipment required

- Radio release tool - T10057-

Protected by copyright. Copying for private or commercial purposes, in part or in whole, is not permitted unless authorised by AUDI AG. AUDI AG does not guarantee or accept any liability with respect to the correctness of information in this document. Copyright by AUDI AG.

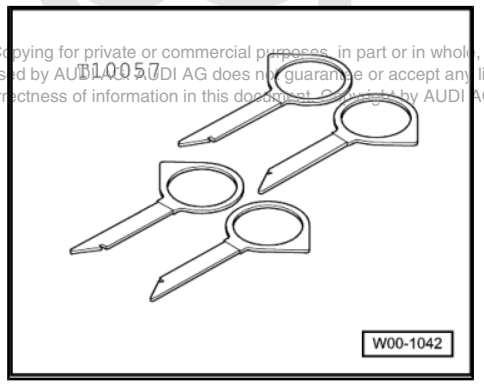

- Fibre-optic conductor repair set - VAS 6223-

- Protective cap for cable connector - VAS 6223/9-

Note

If control unit is to be renewed, select the “Replace control unit” function for appropriate control unit in ⇒ Vehicle diagnostic tester.

– Switch off ignition and all electrical equipment and remove ignition key.

Removing

– Eject any CD/DVD that is still in control unit 1 for information electronics - J794- .

– Remove navigation system flap on control unit 1 for information electronics - J794- ⇒ General body repairs, interior; Rep. gr. 70 ; Dash panel; Exploded view of dash panel .

– Insert two radio release tools - T10057- into slots in control unit 1 for information electronics - J794- -1- until they engage. Pointed ends of grips must face outwards.

– Pull control unit 1 for information electronics - J794- -1- out of mounting frame.

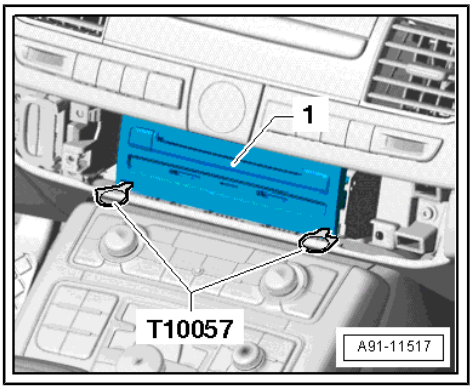

Caution

Note the wire routing in the dash panel for the display. If the wires are routed incorrectly, it will no longer be possible to pull out the display!

– Press release tabs on control unit 1 for information electronics - J794- and remove radio release tools - T10057- .

– Release and unplug connectors at control unit 1 for information electronics - J794- .

– Fit protective cap for cable connector - VAS 6223/9- -1- onto MOST bus connector -2-.

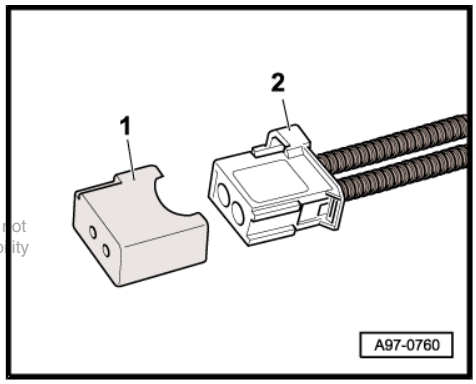

Installing

– Installation is carried out in reverse sequence; note the following:

– Plug all connectors in.

– Slide control unit 1 for information electronics - J794- into mounting frame until it engages.

Protected by copyright. Copying for private or commercial purposes, in part or in whole, is not permitted unless authorised by AUDI AG. AUDI AG does not guarantee or accept any liability with respect to the correctness of information in this document. Copyright by AUDI AG.

Caution

Note the wire routing in the dash panel for the display. If the wires are routed incorrectly, it will no longer be possible to pull out the display!

1.3.2 Removing and installing control unit 2 for information electronics - J829-

The control unit 2 for information electronics - J829- -1- is located between the rear seats in the back panel.

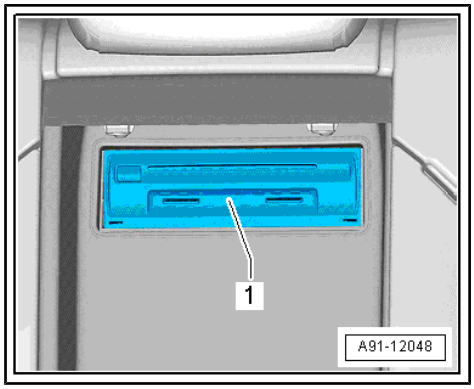

Special tools and workshop equipment required

- Radio release tool - T10057-

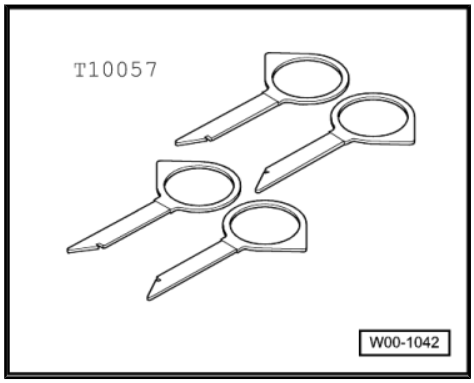

- Protective cap for cable connector - VAS 6223/9-

Protected by copyright. Copying for private or commercial purposes, in part or in whole, is not permitted unless authorised by AUDI AG. AUDI AG does not guarantee or accept any liability with respect to the correctness of information in this document. Copyright by AUDI AG.

Note

If control unit is to be renewed, select the "Replace control unit" function for appropriate control unit in ⇒ Vehicle diagnostic tester.

– Switch off ignition and all electrical equipment and remove ignition key.

Removing

– Fold down rear centre armrest.

– Take out DVD and SD cards that are still in control unit 2 for information electronics - J829- .

– Insert two radio release tools - T10057- into slots in control unit 2 for information electronics - J829- -1- until they engage. Pointed ends of grips must face outwards.

– Pull control unit 2 for information electronics - J829- -1- out of mounting frame.

– Press release tabs on control unit 2 for information electronics - J829- and remove radio release tools - T10057- .

– Release and unplug connectors at control unit 2 for information electronics - J829- .

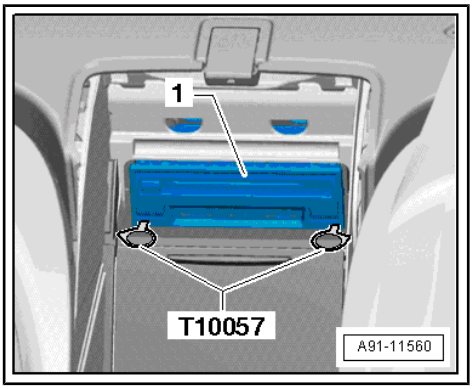

– Fit protective cap for cable connector - VAS 6223/9- -1- onto MOST bus connector -2-.

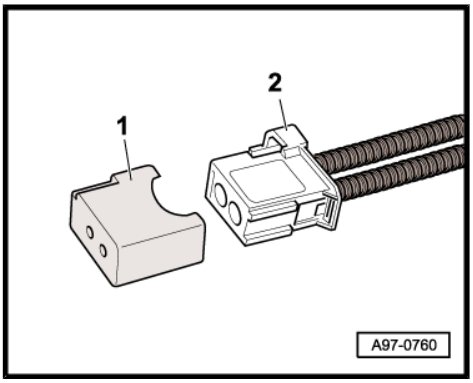

Installing

– Installation is carried out in reverse sequence; note the following:

– Plug all connectors in.

– Slide control unit 2 for information electronics - J829- into mounting frame until it engages.

1.4 Removing and installing infotainment system display

⇒ "1.4.1 Removing and installing display unit for front information display and operating unit control unit J685 ", page 17

⇒ "1.4.2 Removing and installing rear display Y22 / Y23 ", page 18

1.4.1 Removing and installing display unit for front information display and operating unit control unit - J685-

Display unit for front information display and operating unit control unit - J685- (display) is located in dash panel (centre).

– Switch off ignition and all electrical equipment and remove ignition key.

Removing

The display unit for front information display and operating unit control unit - J685- can only be removed when it is extended.

– Remove cover for display unit on dash panel ⇒ General body repairs, interior; Rep. gr. 70 ; Dash panel; Exploded view - dash panel .

When removing trim panel (front passenger side), securing bolts for display mounting are removed at the same time.

Control unit 1 for information electronics - J794- must be removed first to improve access to the connectors.

Protected by copyright. Copying for private or commercial purposes, in part or in whole, is not permitted unless authorised by AUDI AG. AUDI AG does not guarantee or assume any liability with respect to the correctness of information in this document. Copyright by AUDI AG.

Display unit for front information display and operating unit control unit - J685-

– Extend display unit for front information display and operating unit control unit - J685- .

– Carefully pull display mounting -1- out of dash panel -arrow- until electrical connectors at display unit for front information display and operating unit control unit - J685- can be reached.

– Release and unplug electrical connector for display mounting.

– Pull display mounting completely out of dash panel.

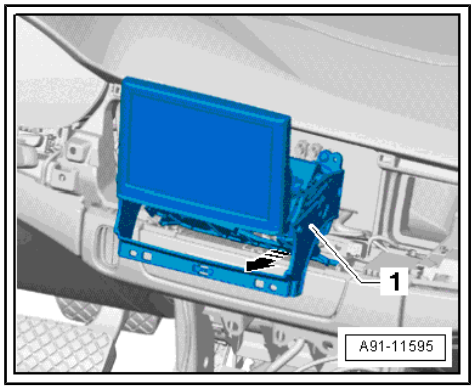

Removing display unit for front information display and operating unit control unit - J685-

The display unit for front information display and operating unit control unit - J685- is attached to the display mounting with two securing bolts.

– Remove bolts -2- and detach display unit for front information display and operating unit control unit - J685- -3- from display mounting -1-.

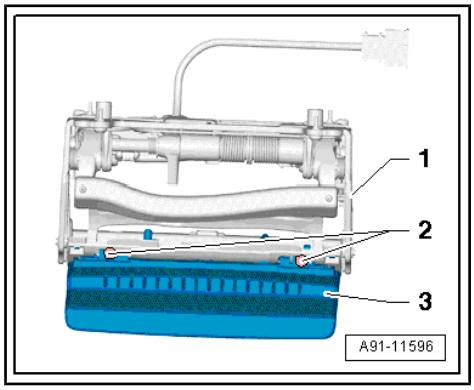

Installing

– Installation is carried out in reverse sequence; note the following:

– Make sure that wiring from display unit for front information display and operating unit control unit - J685- to wiring harness and control unit 1 for information electronics - J794- is correctly routed, as otherwise display unit for front information display and operating unit control unit - J685- will not extend.

Tightening torques

- ⇒ “1.2.1 Overview of fitting locations - infotainment system, up to model year 2013, including vehicles with high-voltage electrical system”, page 7
- ⇒ “1.2.2 Overview of fitting locations - infotainment system, up to model year 2014, excluding vehicles with high-voltage electrical system”, page 9
- ⇒ “1.2.3 Overview of fitting locations - infotainment system, USA, up to model year 2013, including vehicles with high-voltage electrical system”, page 10
- ⇒ “1.2.4 Overview of fitting locations - infotainment system, up to model year 2014, excluding vehicles with high-voltage electrical system”, page 11
- ⇒ “1.2.5 Overview of fitting locations - infotainment system, Japan, up to model year 2013, including vehicles with high-voltage electrical system”, page 12
- ⇒ “1.2.6 Overview of fitting locations - infotainment system, Japan, up to model year 2014, excluding vehicles with high-voltage electrical system”, page 13

1.4.2 Removing and installing rear display - Y22- / -Y23-

The procedure for removing and installing multimedia system display unit 1 - Y22- and multimedia system display unit 2 - Y23- is the same.

Special tools and workshop equipment required

Protected by copyright. Copying for private or commercial purposes, in part or in whole, is not permitted unless authorised by AUDI AG. AUDI AG does not guarantee or accept any liability with respect to the correctness of information in this document. Copyright by AUDI AG.

♦ Removal wedge - 3409-

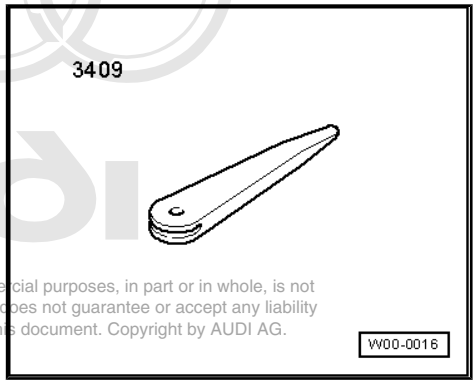

Protected by copyright. Copying for private or commercial purposes, in part or in whole, is not permitted unless authorised by AUDI AG. AUDI AG does not guarantee or accept any liability with respect to the correctness of information in this document. Copyright by AUDI AG.

– Switch off ignition and all electrical equipment and remove ignition key.

Removing

A bracket secures the display on the back of the front seats. The bracket does not have to be removed.

Cover -3- is fastened to rear of display -1-. When removing and installing, first push lugs -4- into slots -2- at bottom of display -1-; then clip in all other lugs -arrows-.

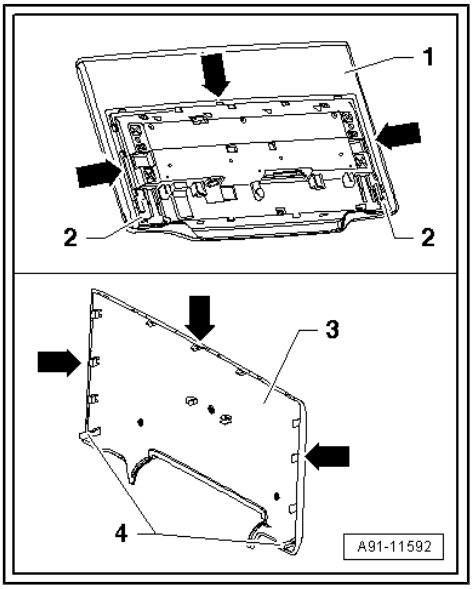

– Use removal wedge - 3409- to carefully unclip cover -2- from display -1- -arrows-.

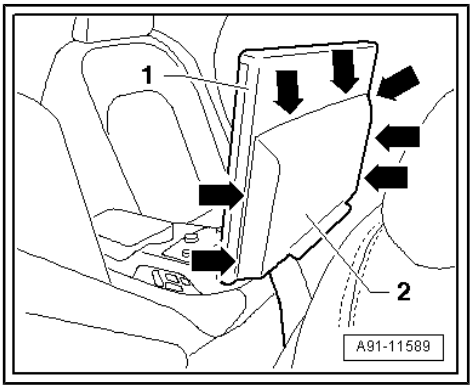

Display -1- is secured to retainer -4- with two bolts -arrows-.

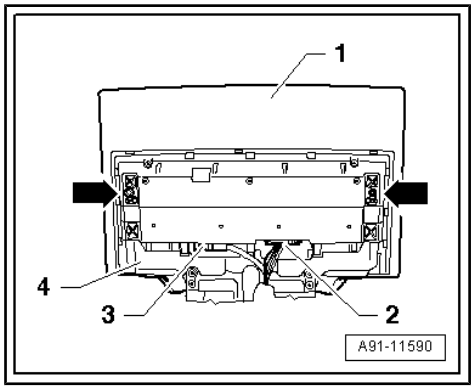

– Unscrew bolts -2- and slide display -1- slightly upwards until connectors are accessible.

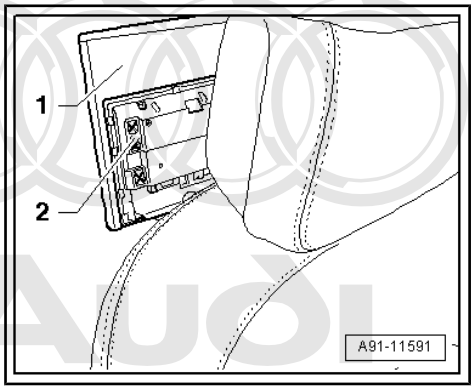

Protected by copyright. Copying for private or commercial purposes, in part or in whole, is not permitted unless authorised by AUDI AG. AUDI AG does not guarantee or accept any liability with respect to the correctness of information in this document. Copyright by AUDI AG.

– Release and unplug connectors -2- and -3- on reverse side of display -1-.

– Completely detach display upwards from bracket.

Installing

– Installation is carried out in reverse sequence; note the following:

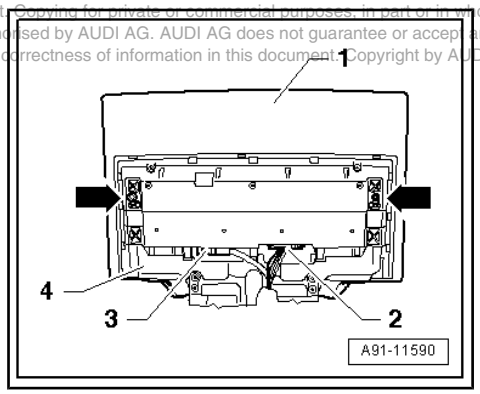

Cover -3- is fastened to rear of display -1-. When removing and installing, first slide lugs -4- into slots -2- at bottom of display -1-; then clip in all other lugs -arrows-.

Tightening torques

♦ ⇒ “13.2 Overview of fitting locations - Rear Seat Entertainment system”, page 177

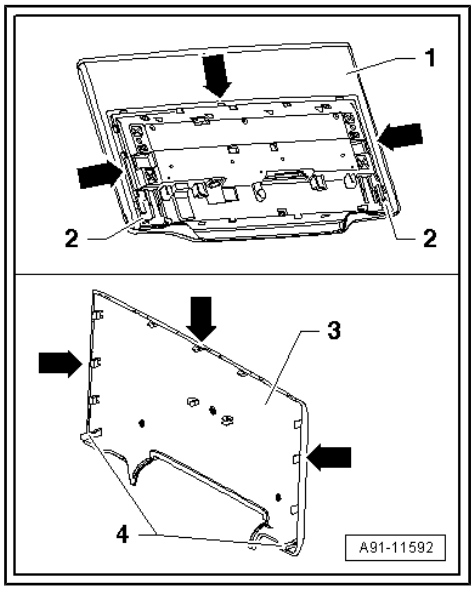

1.5 Removing and installing multimedia system operating unit - E380-

⇒ “1.5.1 Removing and installing multimedia system operating unit E380 ”, page 21

⇒ “1.5.2 Removing and installing touchpad control unit J929 ”, page 21

⇒ “1.5.3 Removing and installing multimedia system operating unit 2 E499 ”, page 22

1.5.1 Removing and installing multimedia system operating unit - E380-

The multimedia system operating unit - E380- -1- is located in the centre console (front).

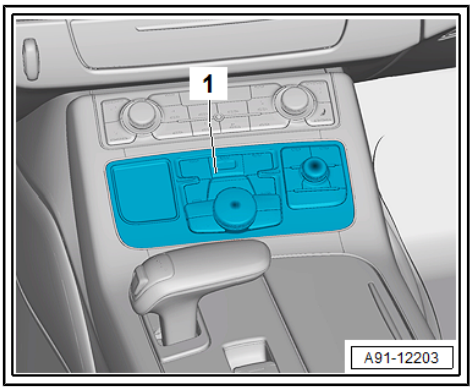

– Switch off ignition and all electrical equipment and remove ignition key.

Removing

The multimedia system operating unit - E380- -2- is attached to the centre console -1- with four spring catches -3-.

An unlocking “retainer” -4- is moveably mounted in the centre console -1-. The “retainer” is accessible from the cup holder. The multimedia system operating unit - E380- -2- can be pushed out of the centre console by knocking on the retainer.

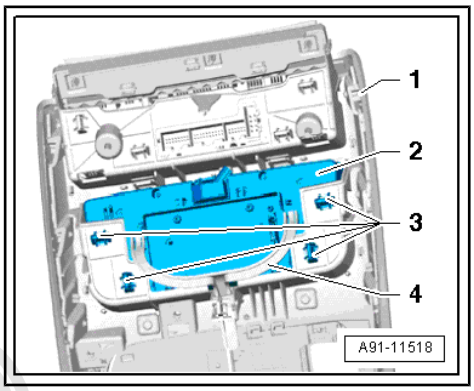

> ⚠ **Caution**
>
> *The surfaces become scratched easily.*
>
> *Carefully mask all surfaces and components to provide protection.*

– Open cup holder and position a small flat-bladed screwdriver -arrow- on retainer -2-.

– Strike the handle of the screwdriver firmly using your hand. The impact causes the “retainer” -2- to press against the multimedia system operating unit - E380- -1- and pushes it upwards out of the centre console.

– Release and unplug connectors on reverse side of multimedia system operating unit - E380- -1-.

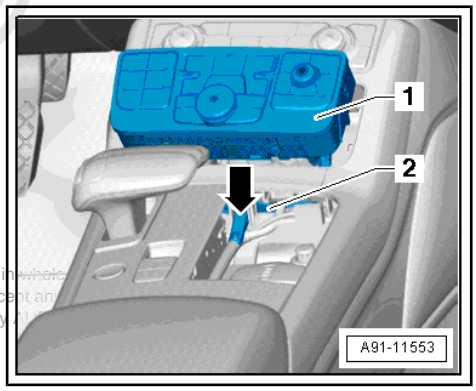

Installing

Protected by copyright. Copying for private or commercial purposes, in part or in whole, is not permitted unless authorised by AUDI AG. AUDI AG does not guarantee or accept any liability with respect to the correctness of information in this document. Copyright by AUDI AG.

– Install in reverse sequence of removal.

1.5.2 Removing and installing touchpad control unit - J929-

The touchpad control unit - J929- is located at the bottom of the multimedia system operating unit - E380- . It cannot be renewed separately.

In the event of a defect, the multimedia system operating unit -E380- must be renewed ⇒ page 21 .

1.5.3 Removing and installing multimedia system operating unit 2 - E499-

The multimedia system operating unit 2 - E499- -1- is located in the rear centre armrest.

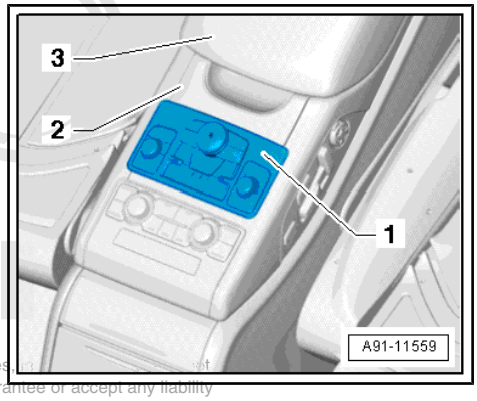

Protected by copyright. Copying for private or commercial purposes, in part or in whole, is not permitted unless authorised by AUDI AG. AUDI AG does not guarantee or accept any liability with respect to the correctness of information in this document. Copyright by AUDI AG.

Special tools and workshop equipment required

♦ Removal wedge - 3409-

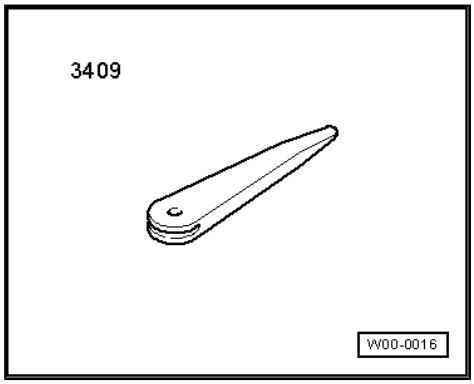

– Switch off ignition and all electrical equipment and remove ignition key.

Removing

– Fold down rear centre armrest.

> ⚠ **Caution**
>
> *The surfaces become scratched easily.*
>
> *Carefully mask all surfaces and components to provide protection.*

– Fold rear section -3- of rear centre armrest upwards.

– Unclip cover -2- behind multimedia system operating unit 2 - E499- -1-.

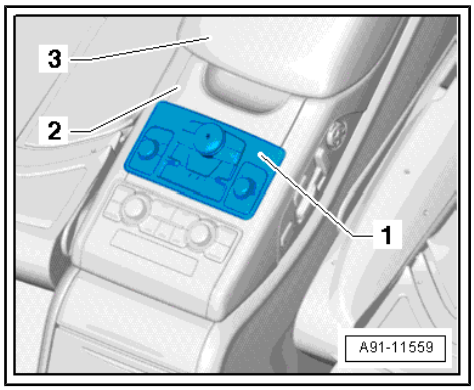

The multimedia system operating unit 2 - E499- -2- is secured by spring clips -1- in the rear centre armrest.

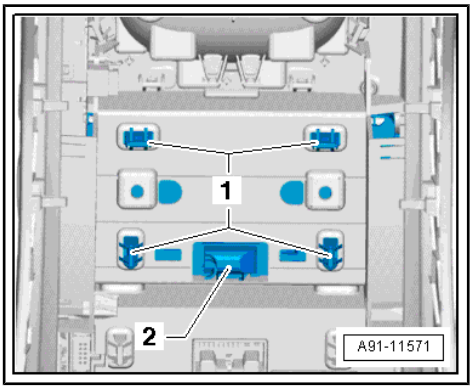

– Starting from rear -arrows-, carefully push multimedia system operating unit 2 - E499- -1- out of rear centre armrest -2- using removal wedge - 3409- .

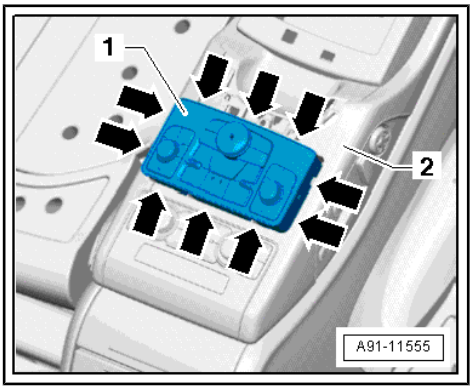

> **Caution**
>
> *The surfaces become scratched easily.*
>
> *Carefully mask all surfaces and components to provide protection.*

– Release and unplug connector on reverse side of multimedia system operating unit 2 - E499- -1-.

Installing

– Install in reverse sequence of removal.

> **Caution**
>
> *The surfaces become scratched easily.*
>
> *Carefully mask all surfaces and components to provide protection.*

Protected by copyright. Copying for private or commercial purposes, in part or in whole, is not permitted unless authorised by AUDI AG. AUDI AG does not guarantee or accept any liability with respect to the correctness of information in this document. Copyright by AUDI AG.

1.6 Pin assignment

⇒ “1.6.1 Pin assignment for control unit 1 for information electronics J794 ”, page 24

⇒ “1.6.2 Pin assignment for control unit 1 for information electronics J794 , USA”, page 27

⇒ “1.6.3 Pin assignment for control unit 1 for information electronics J794 , Japan”, page 30

⇒ “1.6.4 Pin assignment for control unit 2 for information electronics J829 ”, page 33

⇒ “1.6.5 Pin assignment for multimedia system operating unit E380 ”, page 36

⇒ “1.6.6 Pin assignment for multimedia system operating unit 2 E499 ”, page 37

⇒ “1.6.7 Pin assignment for display unit for front information display and operating unit control unit J685 ”, page 37

⇒ “1.6.8 Pin assignment for Y22 / Y23 , rear display”, page 38

Protected by copyright. Copying for private or commercial purposes, in part or in whole, is not permitted unless authorised by AUDI AG. AUDI AG does not guarantee or accept any liability with respect to the correctness of information in this document. Copyright by AUDI AG.

1.6.1 Pin assignment for control unit 1 for information electronics - J794-

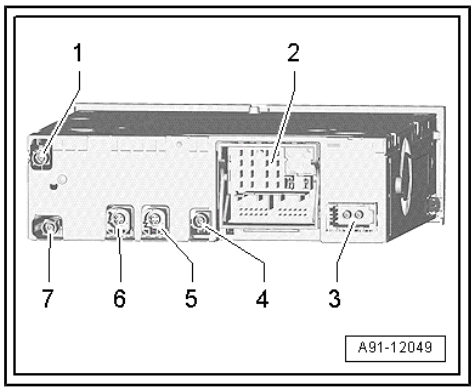

Control unit 1 for information electronics - J794-

1 - GSM connection, from roof aerial - R216-

2 - Connection block with four multi-pin connectors

3 - MOST bus

4 - FBAS input from TV tuner - R78- / DVD changer - R161-

5 - 4-pin connector - T4co- to display unit for front information display and operating unit control unit - J685-

6 - 4-pin connector - T4cn- to connection for external audio sources - R199-

7 - GPS connection, from roof aerial - R216-

Note

Contacts which are not listed are not used.

2 - Connection block with four multi-pin connectors

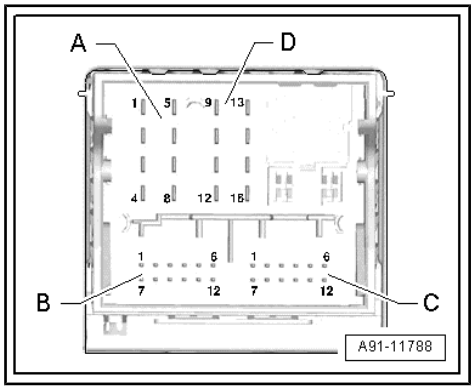

A - 8-pin connector - T8q-

3 - Wake-up to multimedia system operating unit - E380-

5 - Switch-on signal to aerial amplifier for mobile telephone - R86-

6 - Res MU to multimedia system operating unit - E380-

7 - Open circuit diagnostic lead

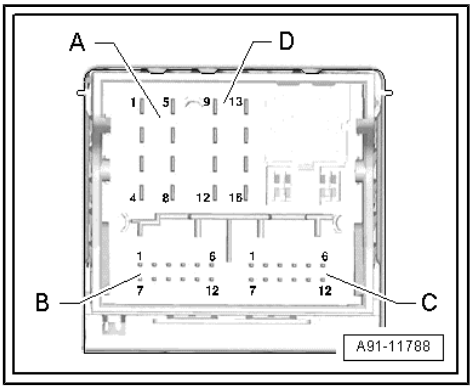

B - 12-pin connector - T12e-

Left-hand drive vehicle

2 - Microphone input (+) from microphone unit in front roof module - R164- (front right microphone - R141-)

3 - Microphone input (–) from microphone unit in front roof module - R164- (front right microphone - R141-)

5 - FBAS wire (-) from reversing camera system control unit - J772- / control unit for overhead view camera - J928-

8 - Microphone input (+) from microphone unit in front roof module - R164- (front left microphone - R140-)

9 - Microphone input (–) from microphone unit in front roof module - R164- (front left microphone - R140-)

11 - FBAS wire (+) from reversing camera system control unit - J772- / control unit for overhead view camera - J928-

Right-hand drive vehicle

2 - Microphone input (+) from microphone unit in front roof module - R164- (front left microphone - R140-)

3 - Microphone input (–) from microphone unit in front roof module - R164- (front left microphone - R140-)

5 - FBAS wire (-) from reversing camera system control unit - J772- / control unit for overhead view camera - J928-

8 - Microphone input (+) from microphone unit in front roof module - R164- (front right microphone - R141-)

9 - Microphone input (–) from microphone unit in front roof module - R164- (front right microphone - R141-)

11 - FBAS wire (+) from reversing camera system control unit - J772- / control unit for overhead view camera - J928-

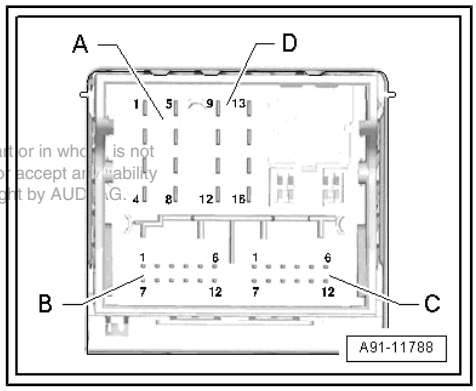

C - 12-pin connector - T12d-

All pins are connected to the connection for external audio sources - R199- .

1 - NF in, earth (low frequency)

2 - NF in, right-side (low frequency)

3 - USB (+5V)

4 - USB (earth)

5 - iPod (ACC power)

6 - Detect

7 - NF in, left-side (low frequency)

8 - NF in, screen earth (low frequency)

9 - FBAS wire (+)

10 - FBAS wire (–)

11 - iPod data

12 - iPod data

Protected by copyright. Copying for private or commercial purposes, in part or in whole, is not permitted unless authorised by AUDI AG. AUDI AG does not guarantee or accept any liability with respect to the correctness of information in this document. Copyright by AUDI AG.

D - 8-pin connector - T8p-

9 - Switch-on signal to telephone bracket - R126-

10 - Data from multimedia system operating unit - E380-

11 - Data to multimedia system operating unit - E380-

12 - Terminal 31

13 - DIAG signal from telephone bracket - R126-

14 - Res BT from multimedia system operating unit - E380-

15 - Terminal 30

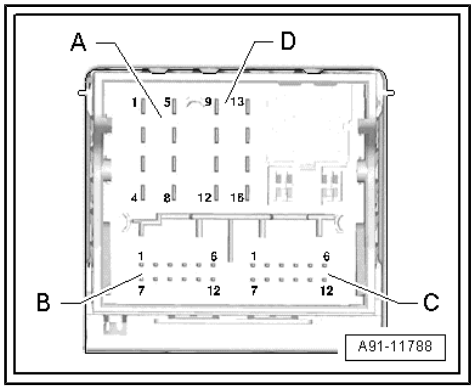

3 - MOST bus

1 - Input

2 - Output

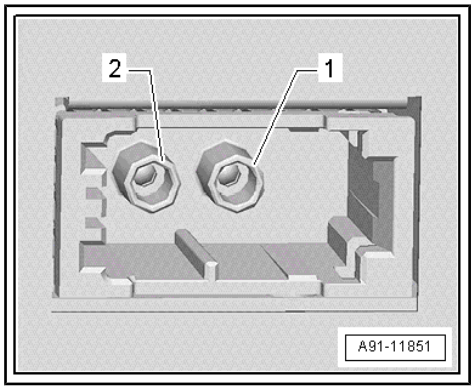

5 - 4-pin connector - T4co-

All pins are connected to the display unit for front information display and operating unit control unit - J685- .

1 - LVDS (–)

2 - LIN

3 - LVDS (+)

4 - Earth

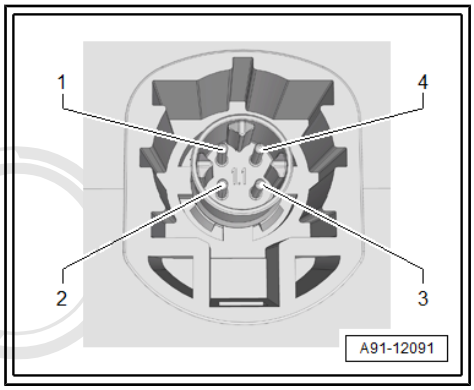

6 - 4-pin connector - T4cn-

All pins are connected to the connection for external audio sources - R199- .

1 - D (+)

2 - iPod detected

3 - D (–)

4 - Earth

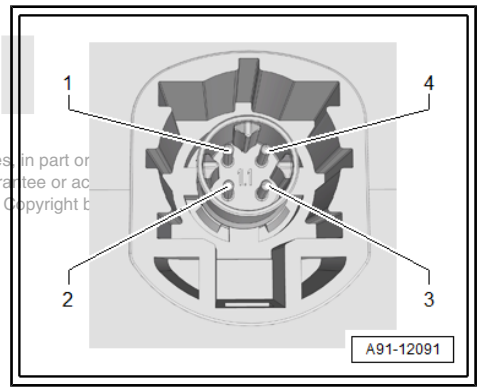

Protected by copyright. Copying for private or commercial purposes, in part or
permitted unless authorised by AUDI AG. AUDI AG does not guarantee or ac
with respect to the correctness of information in this document. Copyright b

1.6.2 Pin assignment for control unit 1 for information electronics - J794- , USA

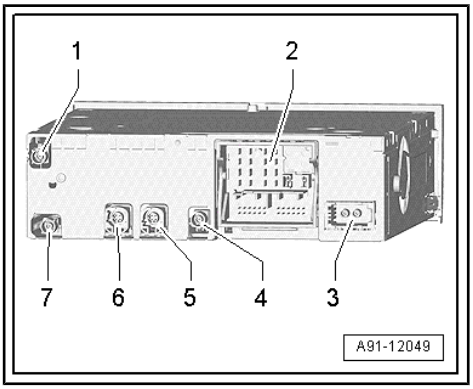

Control unit 1 for information electronics - J794-

1 - Not used

2 - Connection block with four multi-pin connectors

3 - MOST bus

4 - FBAS input from DVD changer - R161-

5 - 4-pin connector - T4co- to display unit for front information display and operating unit control unit - J685-

6 - 4-pin connector - T4cn- to connection for external audio sources - R199-

7 - GPS connection, from roof aerial - R216-

Protected by copyright. Copying for private or commercial purposes, in part or in whole, is not permitted unless authorised by AUDI AG. AUDI AG does not guarantee or accept any liability with respect to the correctness of information in this document. Copyright by AUDI AG.

Note

Contacts which are not listed are not used.

2 - Connection block with four multi-pin connectors

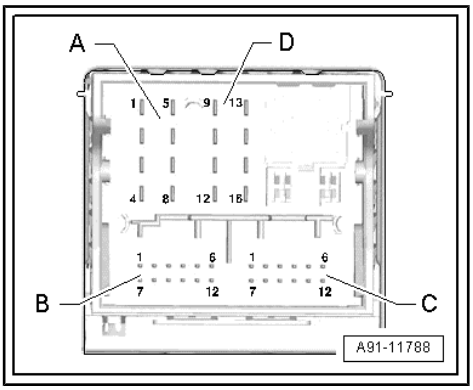

A - 8-pin connector - T8q-

3 - Wake-up to multimedia system operating unit - E380-

6 - Res MU to multimedia system operating unit - E380-

7 - Open circuit diagnostic lead

B - 12-pin connector - T12e-

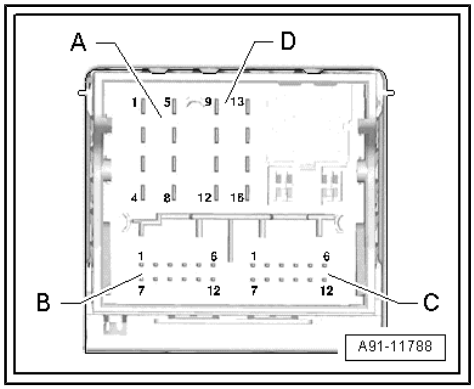

Left-hand drive vehicle

2 - Microphone input (+) from microphone unit in front roof module - R164- (front right microphone - R141-)

3 - Microphone input (–) from microphone unit in front roof module - R164- (front right microphone - R141-)

5 - FBAS wire (-) from reversing camera system control unit - J772- / control unit for overhead view camera - J928-

8 - Microphone input (+) from microphone unit in front roof module - R164- (front left microphone - R140-)

9 - Microphone input (–) from microphone unit in front roof module - R164- (front left microphone - R140-)

11 - FBAS wire (+) from reversing camera system control unit - J772- / control unit for overhead view camera - J928-

Right-hand drive vehicle

2 - Microphone input (+) from microphone unit in front roof module - R164- (front left microphone - R140-)

3 - Microphone input (–) from microphone unit in front roof module - R164- (front left microphone - R140-)

Copyright by AUDI AG. This document or any part thereof may not be used for commercial purposes, in part or in whole, is not permitted unless authorised by AUDI AG. AUDI AG does not guarantee or accept any liability with respect to the correctness of information in this document. Copyright by AUDI AG.

5 - FBAS wire (-) from reversing camera system control unit - J772- / control unit for overhead view camera - J928-

8 - Microphone input (+) from microphone unit in front roof module - R164- (front right microphone - R141-)

9 - Microphone input (–) from microphone unit in front roof module - R164- (front right microphone - R141-)

11 - FBAS wire (+) from reversing camera system control unit - J772- / control unit for overhead view camera - J928-

C - 12-pin connector - T12d-

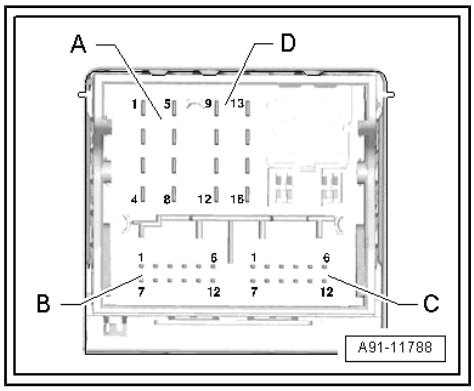

All pins are connected to the connection for external audio sources - R199- .

1 - NF in, earth (low frequency)

2 - NF in, right-side (low frequency)

3 - USB (+5V)

4 - USB (earth)

5 - iPod (ACC power)

6 - Detect

7 - NF in, left-side (low frequency)

8 - NF in, screen earth (low frequency)

9 - FBAS wire (+)

10 - FBAS wire (–)

11 - iPod data

12 - iPod data

D - 8-pin connector - T8p-

10 - Data from multimedia system operating unit - E380-

11 - Data to multimedia system operating unit - E380-

12 - Terminal 31

14 - Res BT from multimedia system operating unit - E380-

15 - Terminal 30

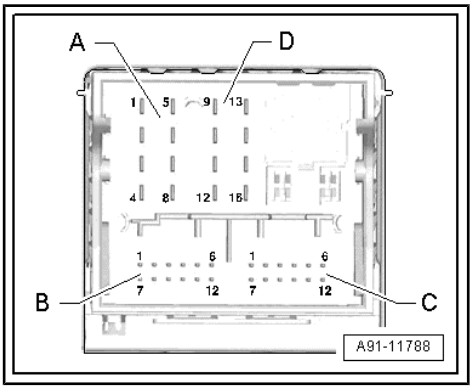

3 - MOST bus

1 - Input

2 - Output

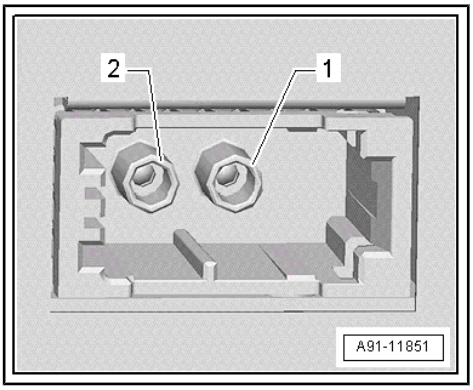

5 - 4-pin connector - T4co-

All pins are connected to the display unit for front information display and operating unit control unit - J685- .

1 - LVDS (–)

2 - LIN

3 - LVDS (+)

4 - Earth

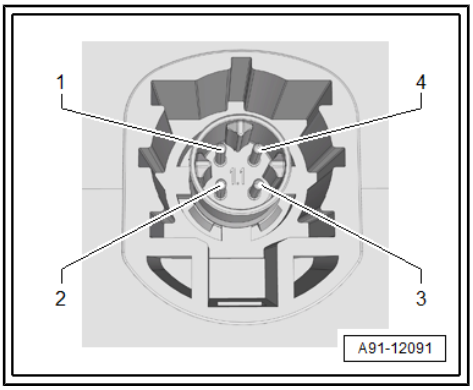

6 - 4-pin connector - T4cn-

All pins are connected to the connection for external audio sources - R199- .

1 - D (+)

2 - iPod detected

3 - D (–)

4 - Earth

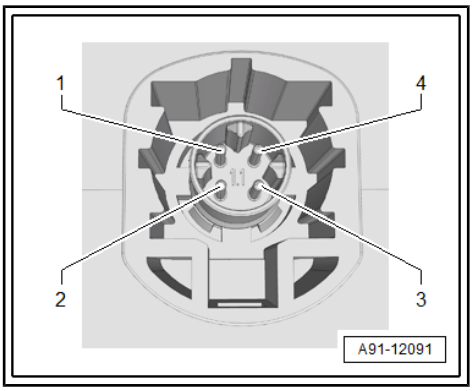

Protected by copyright. Copying for private or commercial purposes, in part or in whole, is not permitted unless authorised by AUDI AG. AUDI AG does not guarantee or accept any liability with respect to the correctness of information in this document. Copyright by AUDI AG.

1.6.3 Pin assignment for control unit 1 for information electronics - J794- , Japan

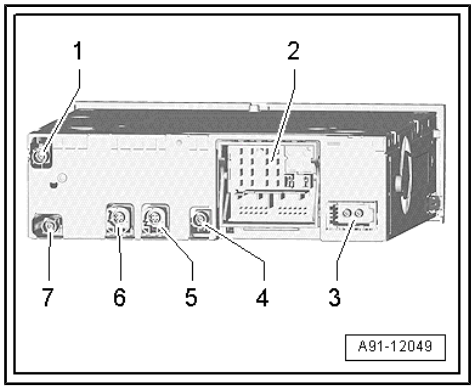

Control unit 1 for information electronics - J794-

1 - Not used

2 - Connection block with four multi-pin connectors

3 - MOST bus

4 - FBAS input from TV tuner - R78- / DVD changer - R161-

5 - 4-pin connector - T4co- to display unit for front information display and operating unit control unit - J685-

6 - 4-pin connector - T4cn- to connection for external audio sources - R199-

7 - GPS connection, from roof aerial - R216-

Note

Contacts which are not listed are not used.

2 - Connection block with four multi-pin connectors

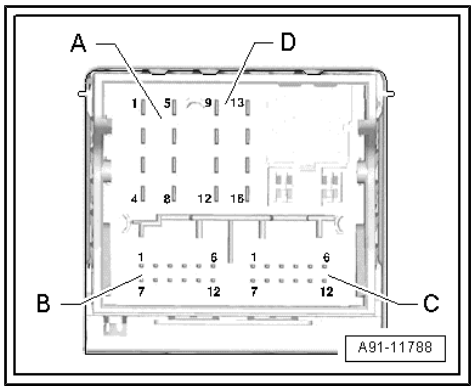

A - 8-pin connector - T8q-

3 - Wake-up to multimedia system operating unit - E380-

6 - Res MU to multimedia system operating unit - E380-

7 - Open circuit diagnostic lead

Protected by copyright. Copying for private or commercial purposes, in part or in whole, is not permitted unless authorised by AUDI AG. AUDI AG does not guarantee or accept any liability with respect to the correctness of information in this document. Copyright by AUDI AG.

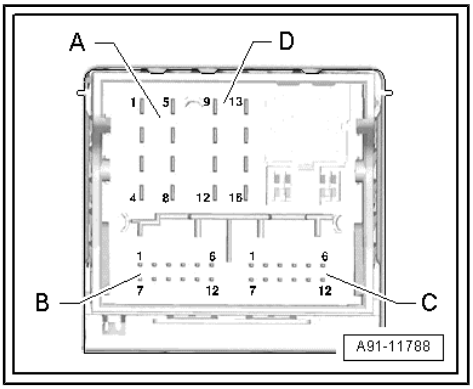

B - 12-pin connector - T12e-

Left-hand drive vehicle

1 - Not used

2 - Microphone input (+) from microphone unit in front roof module - R164- (front right microphone - R141-)

3 - Microphone input (–) from microphone unit in front roof module - R164- (front right microphone - R141-)

4 - Data VICS to chip card reader control unit - J676-

5 - FBAS wire (-) from reversing camera system control unit - J772- / control unit for overhead view camera - J928-

6 - Data ETC to chip card reader control unit - J676-

7 - Not used

8 - Microphone input (+) from microphone unit in front roof module - R164- (front left microphone - R140-)

9 - Microphone input (–) from microphone unit in front roof module - R164- (front left microphone - R140-)

10 - Data VICS from chip card reader control unit - J676-

11 - FBAS wire (+) from reversing camera system control unit - J772- / control unit for overhead view camera - J928-

12 - Data ETC from chip card reader control unit - J676-

Right-hand drive vehicle

1 - Not used

2 - Microphone input (+) from microphone unit in front roof module - R164- (front left microphone - R140-)

3 - Microphone input (–) from microphone unit in front roof module - R164- (front left microphone - R140-)

4 - Data VICS to chip card reader control unit - J676-

5 - FBAS wire (-) from reversing camera system control unit - J772- / control unit for overhead view camera - J928-

6 - Data ETC to chip card reader control unit - J676-

7 - Not used

8 - Microphone input (+) from microphone unit in front roof module - R164- (front right microphone - R141-)

9 - Microphone input (–) from microphone unit in front roof module - R164- (front right microphone - R141-)

10 - Data VICS from chip card reader control unit - J676-

11 - FBAS wire (+) from reversing camera system control unit - J772- / control unit for overhead view camera - J928-

12 - Data ETC from chip card reader control unit - J676-

Protected by copyright. Copying for private or commercial purposes, in part or in whole, is not permitted unless authorised by AUDI AG. AUDI AG does not guarantee or accept any liability with respect to the correctness of information in this document. Copyright by AUDI AG.

C - 12-pin connector - T12d-

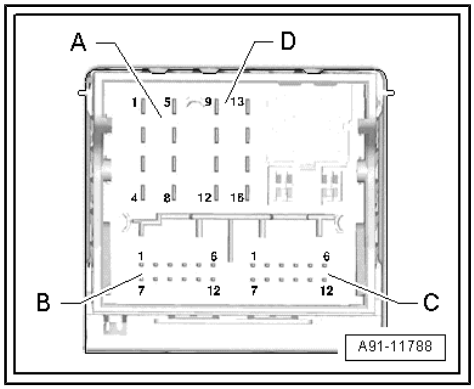

All pins are connected to the connection for external audio sources - R199- .

1 - NF in, earth (low frequency)

2 - NF in, right-side (low frequency)

3 - USB (+5V)

4 - USB (earth)

5 - iPod (ACC power)

6 - Detect

7 - NF in, left-side (low frequency)

8 - NF in, screen earth (low frequency)

9 - FBAS wire (+)

10 - FBAS wire (–)

11 - iPod data

12 - iPod data

D - 8-pin connector - T8p-

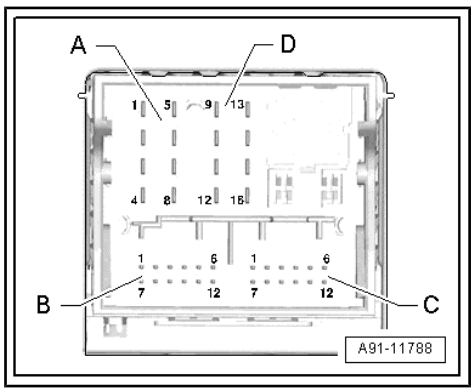

10 - Data from multimedia system operating unit - E380-

11 - Data to multimedia system operating unit - E380-

12 - Terminal 31

14 - Res BT from multimedia system operating unit - E380-

15 - Terminal 30

3 - MOST bus

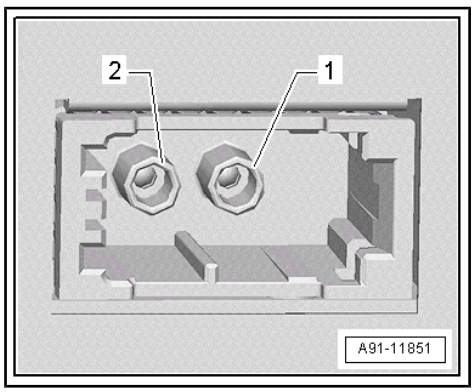

1 - Input

2 - Output

Protected by copyright. Copying for private or commercial purposes, in part or in whole, is not permitted unless authorised by AUDI AG. AUDI AG does not guarantee or accept any liability with respect to the correctness of information in this document. Copyright by AUDI AG.

5 - 4-pin connector - T4co-

All pins are connected to the display unit for front information display and operating unit control unit - J685- .

1 - LVDS (–)

2 - LIN

3 - LVDS (+)

4 - Earth

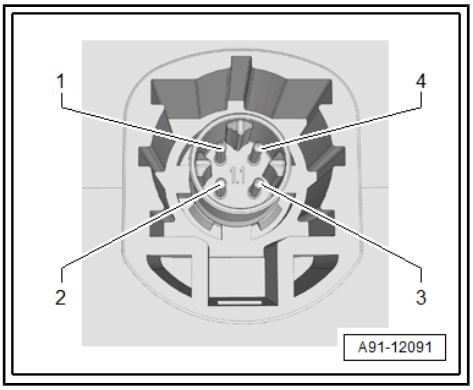

6 - 4-pin connector - T4cn-

All pins are connected to the connection for external audio sources - R199- .

1 - D (+)

2 - iPod detected

3 - D (–)

4 - Earth

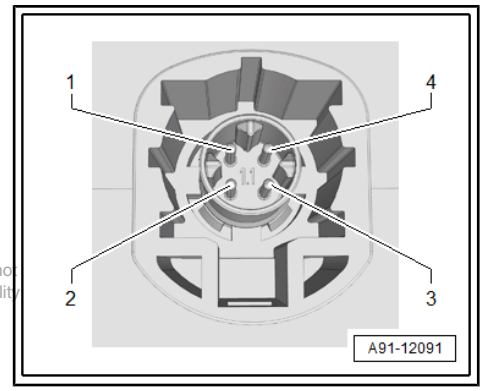

Protected by copyright. Copying for private or commercial purposes, in part or in whole, is not permitted unless authorised by AUDI AG. AUDI AG does not guarantee or accept any liability with respect to the correctness of information in this document. Copyright by AUDI AG.

1.6.4 Pin assignment for control unit 2 for information electronics - J829-

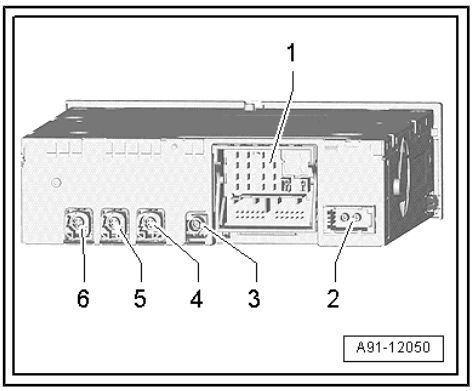

Control unit 2 for information electronics - J829-

1 - Connection block with four multi-pin connectors

2 - MOST bus

3 - FBAS input from DVD changer - R161-

4 - 4-pin connector - T4ck- to multimedia system operating unit 1 - Y22- , left-side

5 - 4-pin connector - T4ci- to connection 2 for external audio sources - R231-

6 - 4-pin connector - T4ch- to multimedia system operating unit 2 - Y23- , right-side

Note

Contacts which are not listed are not used.

1 - Connection block with four multi-pin connectors

A - 8-pin connector - T8o-

3 - Wake-up to multimedia system operating unit 2 - E499-

6 - Res MU to multimedia system operating unit 2 - E499-

7 - Open circuit diagnostic lead

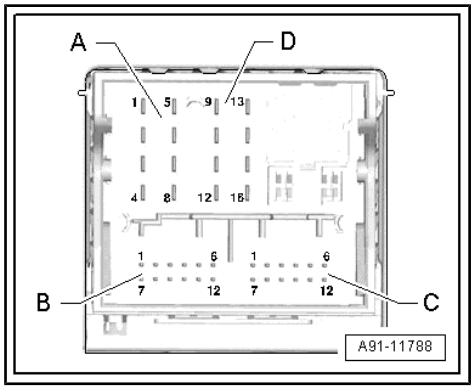

B - 12-pin connector - T12af-

5 - FBAS wire (–) from TV tuner - R78-

11 - FBAS wire (+) from TV tuner - R78-

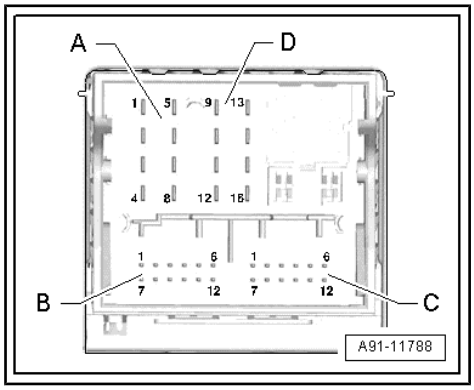

C - 12-pin connector - T12ae-

All pins are connected to the connection 2 for external audio sources - R231- .

1 - NF in, earth (low frequency)

2 - NF in, right-side (low frequency)

3 - USB (+5V)

4 - USB (earth)

5 - Earth

6 - Detect

7 - NF in, left-side (low frequency)

8 - NF in, screen earth (low frequency)

9 - FBAS wire (+)

10 - FBAS wire (–)

11 - iPod data

12 - iPod data

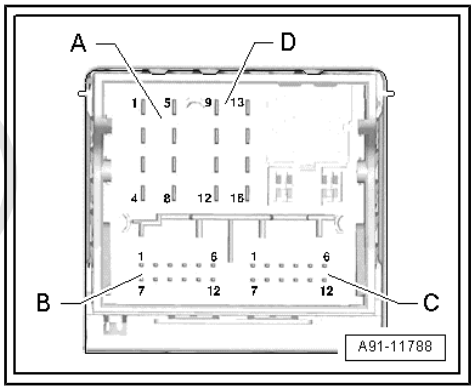

Protected by copyright. Copying for private or commercial purposes, in part or in whole, is not permitted unless authorised by AUDI AG. AUDI AG does not guarantee or accept any liability with respect to the correctness of information in this document. Copyright by AUDI AG.

D - 8-pin connector - T8n-

10 - Data from multimedia system operating unit 2 - E499-

11 - Data to multimedia system operating unit 2 - E499-

12 - Terminal 31

14 - Res BT from multimedia system operating unit 2 - E499-

15 - Terminal 30

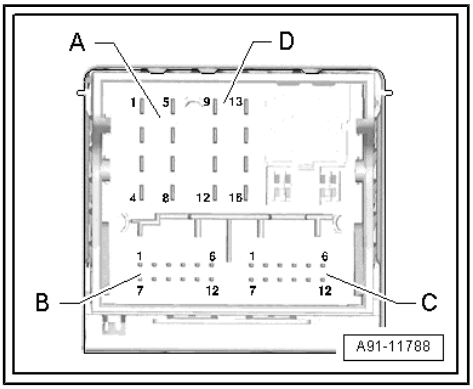

2 - MOST bus

1 - Input

2 - Output

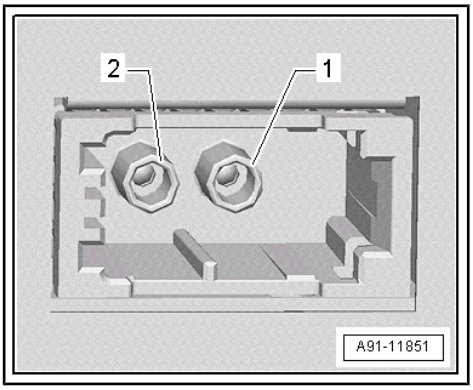

4 - 4-pin connector - T4ck-

All pins are connected to the multimedia system display unit 1 - Y22- .

1 - LVDS (–)

2 - LIN

3 - LVDS (+)

4 - Earth

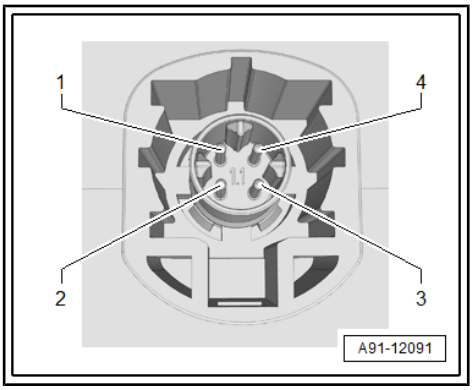

5 - 4-pin connector - T4ci-

All pins are connected to the connection 2 for external audio sources - R231- .

1 - D (+)

2 - iPod detected

3 - D (–)

4 - Earth

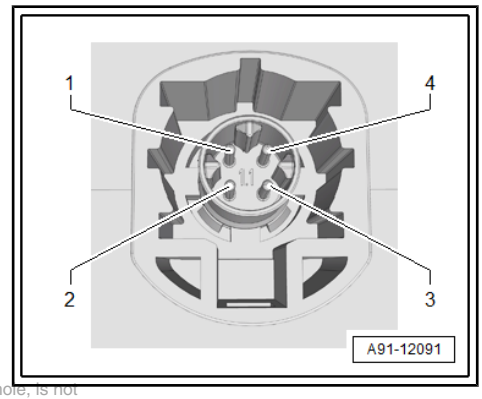

Protected by copyright. Copying for private or commercial purposes, in part or in whole, is not permitted unless authorised by AUDI AG. AUDI AG does not guarantee or accept any liability with respect to the correctness of information in this document. Copyright by AUDI AG.

6 - 4-pin connector - T4ch-

All pins are connected to the multimedia system display unit 2 - Y23- .

1 - LVDS (–)

2 - LIN

3 - LVDS (+)

4 - Earth

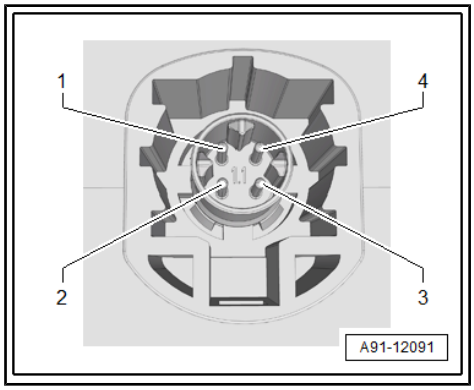

1.6.5 Pin assignment for multimedia system operating unit - E380-

Multimedia system operating unit - E380-

Note

Contacts which are not listed are not used.

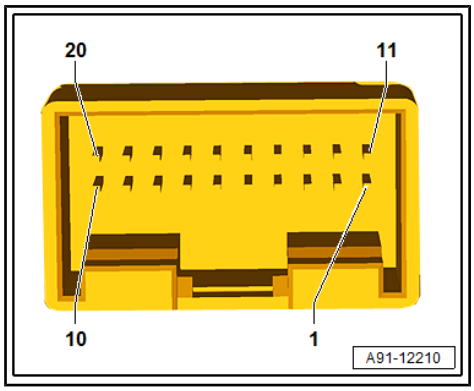

20-pin connector - T20f-

3 - Display mounting

4 - Close display limit switch - F331-

5 - Open display limit switch - F330-

6 - Wake-up to control unit 1 for information electronics - J794-

7 - Terminal 30

8 - Terminal 31

10 - Display unit button - E506- in dash panel

13 - RES HU to control unit 1 for information electronics - J794-

14 - RES BT to control unit 1 for information electronics - J794-

15 - Data from control unit 1 for information electronics - J794-

16 - Data to control unit 1 for information electronics - J794-

19 - Open and close display motor - V301-

20 - Open and close display motor - V301-

Protected by copyright. Copying for private or commercial purposes, in part or in whole, is not permitted unless authorised by AUDI AG. AUDI AG does not guarantee or accept any liability with respect to the correctness of information in this document. Copyright by AUDI AG.

1.6.6 Pin assignment for multimedia system operating unit 2 - E499-

Multimedia system operating unit 2 - E499-

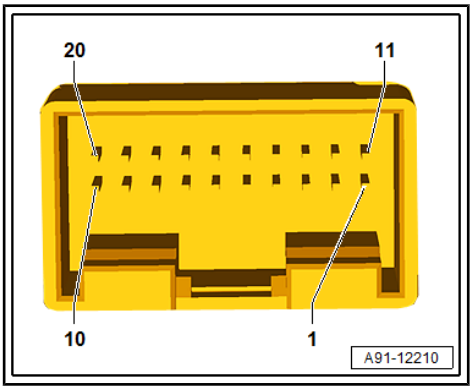

Note

Contacts which are not listed are not used.

20-pin connector - T20i-

1 - NF in 1, left-side (low frequency) from radio - R-
2 - NF in 1, right-side (low frequency) from radio - R-
3 - NF in 1, earth (low frequency) from radio - R-
4 - Not used
5 - Diag 1/2 to radio - R-
6 - Wake-up to control unit 2 for information electronics - J829-
7 - Terminal 30
8 - Terminal 31
9 - Not used
10 - Not used
11 - Diag 1 to radio - R-
12 - Diag 2 to radio - R-
13 - RES HU to control unit 2 for information electronics - J829-
14 - Res MU to control unit 2 for information electronics - J829-
15 - Data from control unit 2 for information electronics - J829-
16 - Data to control unit 2 for information electronics - J829-
17 - Not used
18 - NF in 2, earth (low frequency) from radio - R-
19 - NF in 2, left-side (low frequency) from radio - R-
20 - NF in 2, right-side (low frequency) from radio - R-

1.6.7 Pin assignment for display unit for front information display and operating unit control unit - J685-

Display unit for front information display and operating unit control unit - J685-

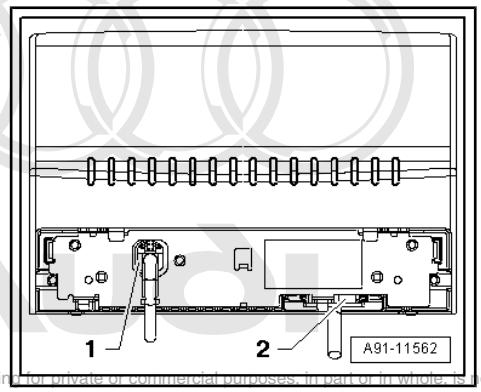

1 - 4-pin connector - T4cp- from control unit 1 for information electronics - J794-
2 - 8-pin connector - T8s-

Note

Contacts which are not listed are not used.

Protected by copyright. Copying for private or commercial purposes, in part or in whole, is not permitted unless authorised by AUDI AG. AUDI AG does not guarantee or accept any liability with respect to the correctness of information in this document. Copyright by AUDI AG.

1 - 4-pin connector - T4cp-

All pins are connected to the control unit 1 for information electronics - J794- .

1 - Earth

2 - LVDS (+)

3 - LIN

4 - LVDS (–)

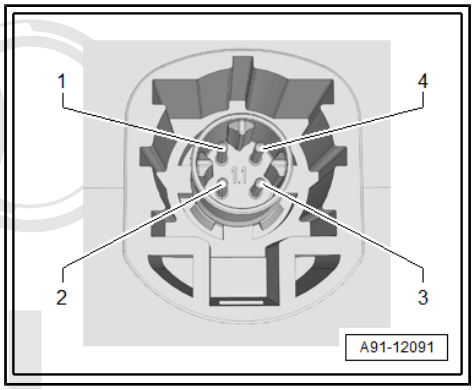

2 - 8-pin connector - T8s-

4 - Terminal 30

5 - Terminal 31

Protected by copyright. Copying for private or commercial purposes
permitted unless authorised by AUDI AG. AUDI AG does not guar
with respect to the correctness of information in this document.

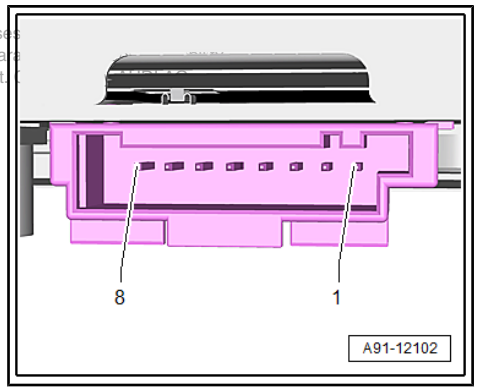

1.6.8 Pin assignment for -Y22- / -Y23- , rear display

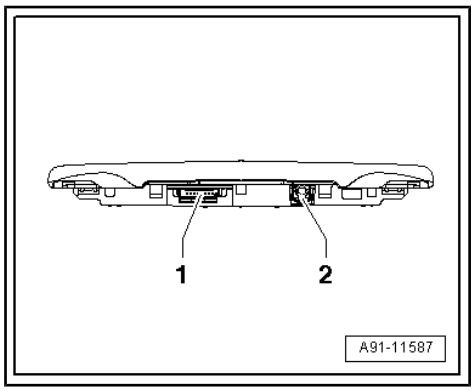

Multimedia system display unit 1 - Y22-

1 - 8-pin connector - T8al-

2 - 4-pin connector - T4ez-

Note

Contacts which are not listed are not used.

1 - 8-pin connector - T8al-

1 - Not used

2 - Not used

3 - Terminal 31

4 - Terminal 30

5 - Terminal 31

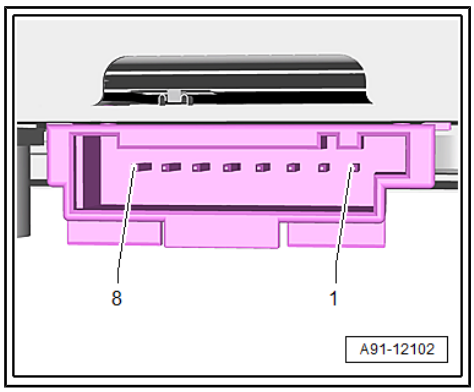

2 - 4-pin connector - T4ez-

All pins are connected to the control unit 2 for information electronics - J829- .

1 - Earth

2 - LVDS (+)

3 - LIN

4 - LVDS (–)

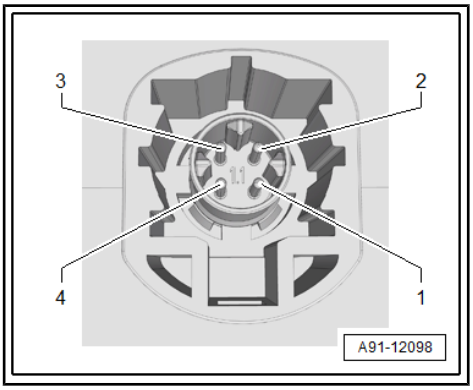

Multimedia system display unit 2 - Y23-

1 - 8-pin connector - T8am-

2 - 4-pin connector - T4fy-

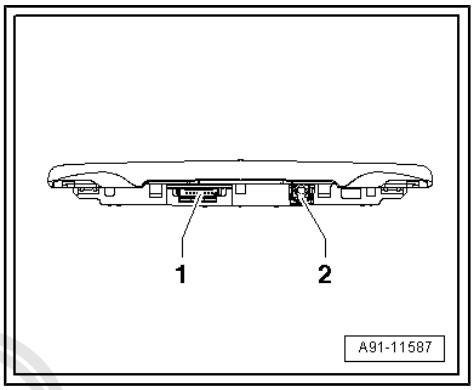

Note

Contacts which are not listed are not used.

1 - 8-pin connector - T8am-

1 - Not used

2 - Not used

3 - Terminal 31

4 - Terminal 30

5 - Terminal 31

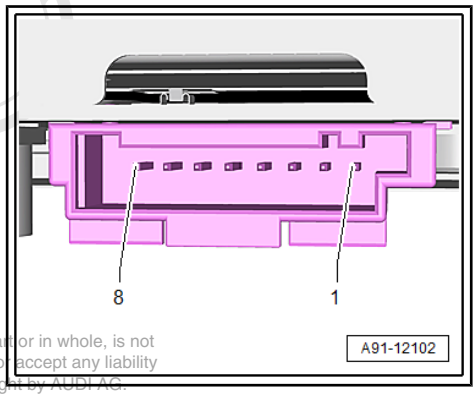

Protected by copyright. Copying for private or commercial purposes, in part or in whole, is not permitted unless authorised by AUDI AG. AUDI AG does not guarantee or accept any liability with respect to the correctness of information in this document. Copyright by AUDI AG.

2 - 4-pin connector - T4fy-

All pins are connected to the control unit 2 for information electronics - J829- .

1 - Earth

2 - LVDS (+)

3 - LIN

4 - LVDS (–)

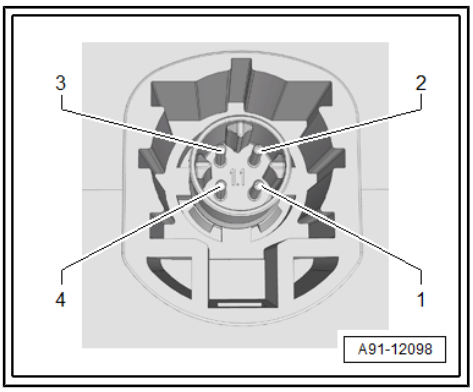

2 Sound system

⇒ “2.1 Layout - sound system”, page 40

⇒ “2.2 Overview of fitting locations - sound system”, page 44

⇒ “2.3 Overview of fitting locations - ANC microphones”, page 51

⇒ “2.4 Removing and installing digital sound package control unit/ amplifier”, page 52

⇒ “2.5 Removing and installing rear treble loudspeakers R14 / R16 ”, page 63

⇒ “2.6 Removing and installing front treble loudspeakers R20 / R22 ”, page 64

⇒ “2.7 Removing and installing rear mid-range loudspeaker”, page 66

⇒ “2.8 Removing and installing front mid-range loudspeakers”, page 67

⇒ “2.9 Removing and installing rear mid-range and bass loud-speakers”, page 68

⇒ “2.10 Removing and installing rear bass loudspeakers R15 / R17 ”, page 68

⇒ “2.11 Removing and installing front bass loudspeakers R21 / R23 ”, page 69

⇒ “2.12 Removing and installing subwoofer R211 ”, page 70

⇒ “2.13 Removing and installing effect loudspeakers”, page 72

⇒ “2.14 Removing and installing centre loudspeaker”, page 73

⇒ “2.15 Removing and installing ANC microphones R142 / R143 / R144 / R145 ”, page 74

⇒ “2.16 Pin assignment”, page 75

2.1 Layout - sound system

The following systems are available:

Sound system standard (9VD)

- One loudspeaker in each front door (left and right)
- Three loudspeakers in dash panel (left, centre and right)
- One loudspeaker in each rear door (left and right)
- One loudspeaker in each B-pillar (left and right)
- Subwoofer - R211- in rear shelf (centre)

Protected by copyright. Copying for private or commercial purposes, in part or in whole, is not permitted unless authorised by AUDI AG. AUDI AG does not guarantee or accept any liability with respect to the correctness of information in this document. Copyright by AUDI AG.

1 - Radio - R- in luggage compartment on back panel (right-side)/in luggage compartment recess (left-side)

2 - Front left treble loudspeaker - R20- / front right treble loudspeaker - R22- in dash panel

3 - Front left bass loudspeaker - R21- / front right bass loudspeaker - R23- in front doors (bottom)

4 - Rear left treble loudspeaker - R14- / rear right treble loudspeaker - R16- in B-pillars

5 - Rear left mid-range and bass loudspeaker - R159- / rear right mid-range and bass loudspeaker - R160- in rear doors (bottom)

6 - Centre loudspeaker - R208- in dash panel (centre)

7 - Subwoofer - R211- in rear shelf

8 - MOST bus

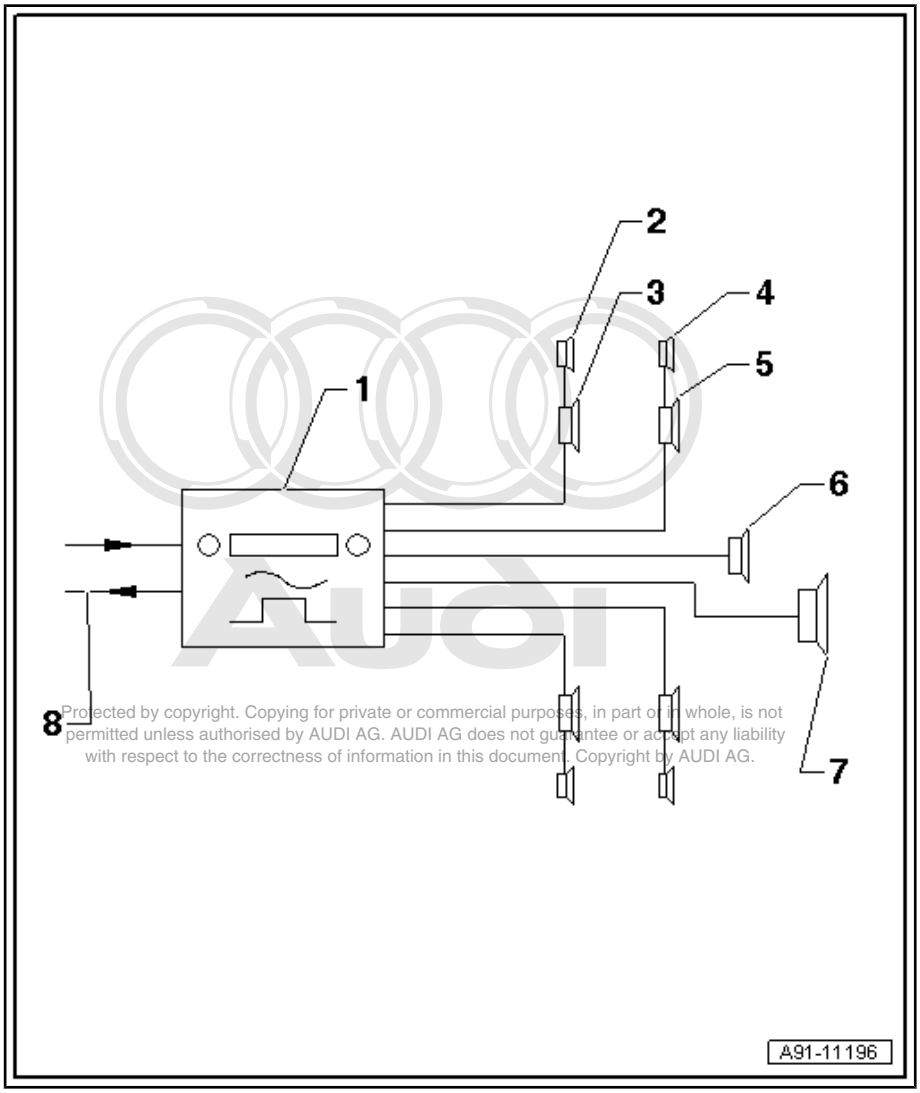

Protected by copyright. Copying for private or commercial purposes, in part or in whole, is not permitted unless authorised by AUDI AG. AUDI AG does not guarantee or accept any liability with respect to the correctness of information in this document. Copyright by AUDI AG.

Sound system premium, BOSE, 8RY

- Two loudspeakers in each front door (left and right)
- Three loudspeakers in dash panel (left, centre and right)
- One loudspeaker in each rear door (left and right)
- One loudspeaker in each B-pillar (left and right)
- Two loudspeakers on each side of rear shelf
- Subwoofer - R211- in rear shelf (centre)
- Digital sound package control unit - J525- in luggage compartment on back panel (left-side)

1 - Digital sound package control unit - J525- in luggage compartment on back panel (left-side)

2 - Front left treble loudspeaker - R20- / front right treble loudspeaker - R22- in dash panel

3 - Front left mid-range loudspeaker - R103- / front right mid-range loudspeaker - R104- in front doors (centre)

4 - Front left bass loudspeaker - R21- / front right bass loudspeaker - R23- in front doors (bottom)

5 - Rear left treble loudspeaker - R14- / rear right treble loudspeaker - R16- in B-pillars

6 - Rear left mid-range and bass loudspeaker - R159- / rear right mid-range and bass loudspeaker - R160- in rear doors (bottom)

7 - Centre loudspeaker - R208- in dash panel (centre)

8 - Left effect loudspeaker - R209- / right effect loudspeaker - R210- in rear shelf (left and right)

9 - Subwoofer - R211- in rear shelf

10 - Microphone unit in front roof module - R164- (internal microphone - R74-) in front interior light - W1-

- ANC microphones in headliner

11 - MOST bus

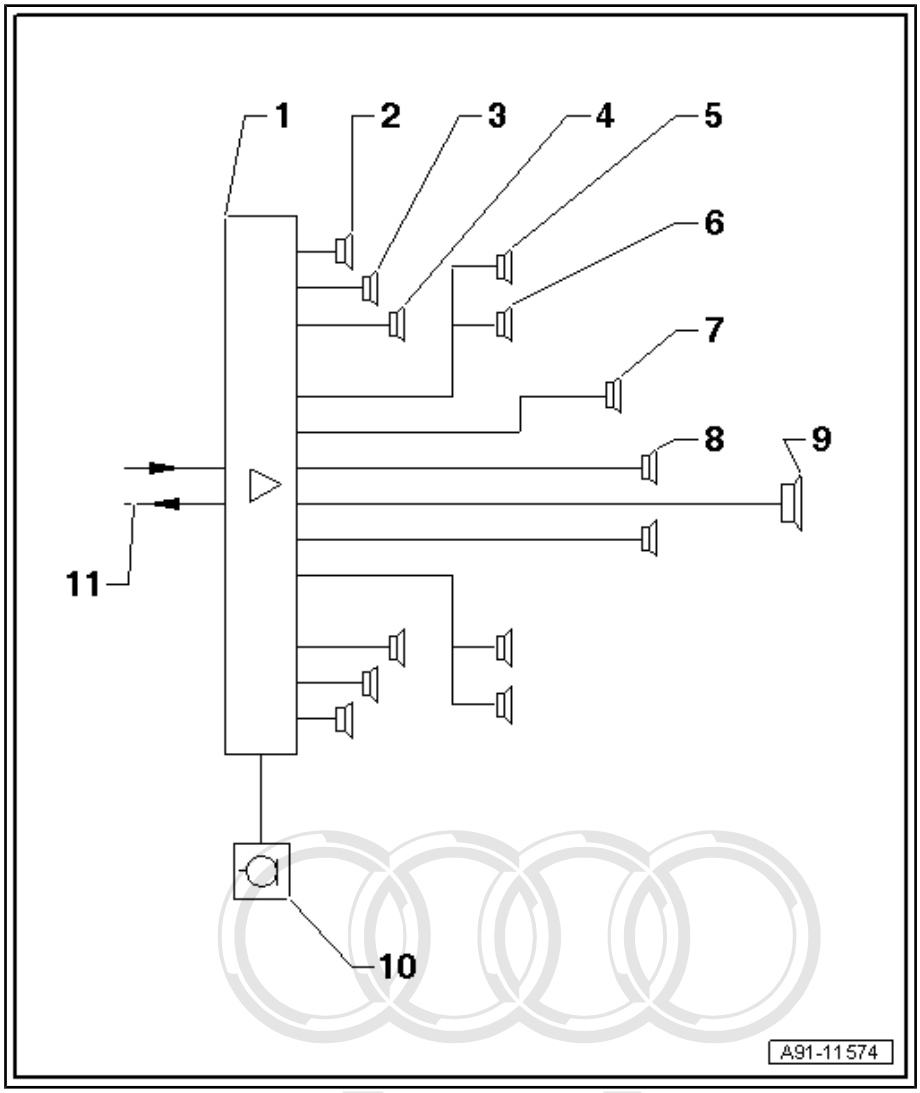

Protected by copyright. Copying for private or commercial purposes, in part or in whole, is not permitted unless authorised by AUDI AG. AUDI AG does not guarantee or accept any liability with respect to the correctness of information in this document. Copyright by AUDI AG.

Sound system advanced, Bang & Olufsen, 8RF

- Two loudspeakers in each front door (left and right)
- One loudspeaker on each side of dash panel
- Two loudspeakers in centre of dash panel
- One loudspeaker in each B-pillar (left and right)
- Two loudspeakers in each rear door (left and right)
- Two loudspeakers on each side of rear shelf
- Subwoofer - R211- in rear shelf (centre)
- Digital sound package control unit - J525- in luggage compartment on back panel (left-side)
- Digital sound package control unit 2 - J787- in luggage compartment on back panel (left-side)/in luggage compartment recess (left-side)

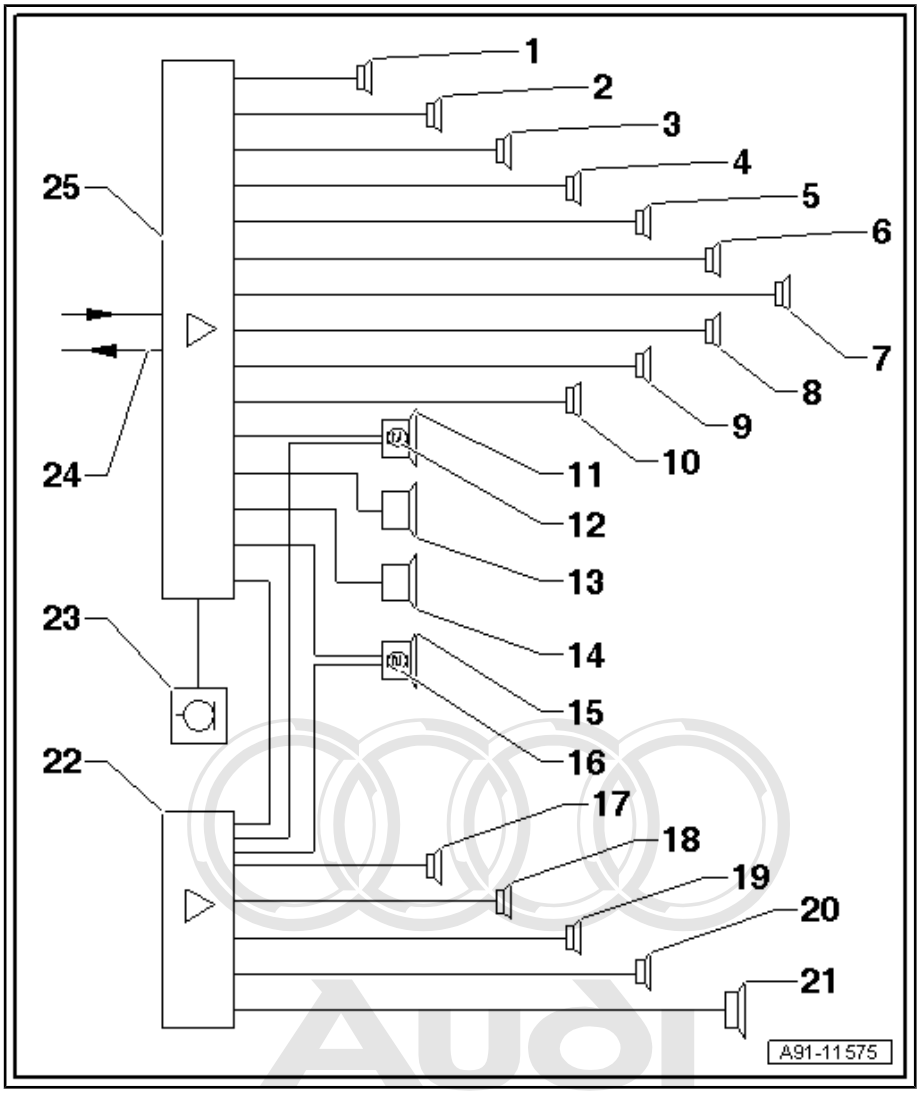

1 - Front left mid-range loudspeaker - R103- in front left door (centre)

2 - Front right mid-range loudspeaker - R104- in front right door (centre)

3 - Rear left treble loudspeaker - R14- in B-pillar (left-side)

4 - Rear left mid-range loudspeaker - R105- in rear left door (centre)

5 - Rear right treble loudspeaker - R16- in B-pillar (right-side)

6 - Rear right mid-range loudspeaker - R106- in rear right door (centre)

7 - Left effect loudspeaker - R209- in rear shelf (left-side)

8 - Rear left treble loudspeaker 2 - R217- in rear shelf (left-side)

9 - Right effect loudspeaker - R210- in rear shelf (right-side)

10 - Rear right treble loudspeaker 2 - R218- in rear shelf (right-side)

11 - Front left treble loudspeaker - R20- in dash panel (left-side)

12 - Control motor for front left treble speaker - V344-

13 - Centre loudspeaker - R208- in dash panel (centre)

Protected by copyright. Copying for private or commercial purposes, in part or in whole, is not permitted unless authorised by AUDI AG. AUDI AG does not guarantee or accept any liability with respect to the correctness of information in this document. Copyright by AUDI AG.

14 - Centre loudspeaker 2 - R219- in dash panel (centre)

15 - Front right treble loudspeaker - R22- in dash panel (right-side)

16 - Control motor for front right treble loudspeaker - V345-

17 - Front left bass loudspeaker - R21- in front left door (bottom)

18 - Front right bass loudspeaker - R23- in front right door (bottom)

19 - Rear left bass loudspeaker - R15- in rear left door (bottom)

20 - Rear right bass loudspeaker - R17- in rear right door (bottom)

21 - Subwoofer - R211- in rear shelf

22 - Digital sound package control unit 2 - J787- in luggage compartment on back panel (left-side)/in luggage compartment recess (left-side)

23 - Microphone unit in front roof module - R164- (internal microphone - R74-) in front interior light - W1-

- ANC microphones in headliner

24 - MOST bus

25 - Digital sound package control unit - J525- in luggage compartment on back panel (left-side)

Notes on MOST bus

In addition to the CAN bus, the fibre optic data bus “MOST bus” is used.

A “fibre optic cable” is used as the connecting cable. The fibre optic cables are fitted in corrugated tubes for protection.

Renew the complete fibre optic cable whenever possible.

The end faces of the connectors must not become dirty.

If connectors are unplugged: fit a protective cap for cable connector - VAS 6223/9- .

When installing the fibre optic cables, be sure to observe the minimum bending radius of 25 mm. Do not crush or kink the fibre optic cables.

Repairing fibre optic cables ⇒ Electrical system; Rep. gr. 97 ; Fibre optic cables .

2.2 Overview of fitting locations - sound system

⇒ “2.2.1 Overview of fitting locations - sound system, loudspeakers (Standard/BOSE)”, page 44

⇒ “2.2.2 Overview of fitting locations - sound system, loudspeakers (Bang & Olufsen)”, page 46

⇒ “2.2.3 Overview of fitting locations - sound system, sound amplifiers, microphones, up to model year 2013, including vehicles with high-voltage electrical system”, page 48

⇒ “2.2.4 Overview of fitting locations - sound system, sound amplifiers, microphones, from model year 2014, excluding vehicles with high-voltage electrical system”, page 50

2.2.1 Overview of fitting locations - sound system, loudspeakers (Standard/BOSE)

Copyright by AUDI AG. Copying or reproduction in any form or by any means is not permitted unless authorised by AUDI AG. AUDI AG does not guarantee or accept any liability with respect to the correctness of information in this document. Copyright by AUDI AG.

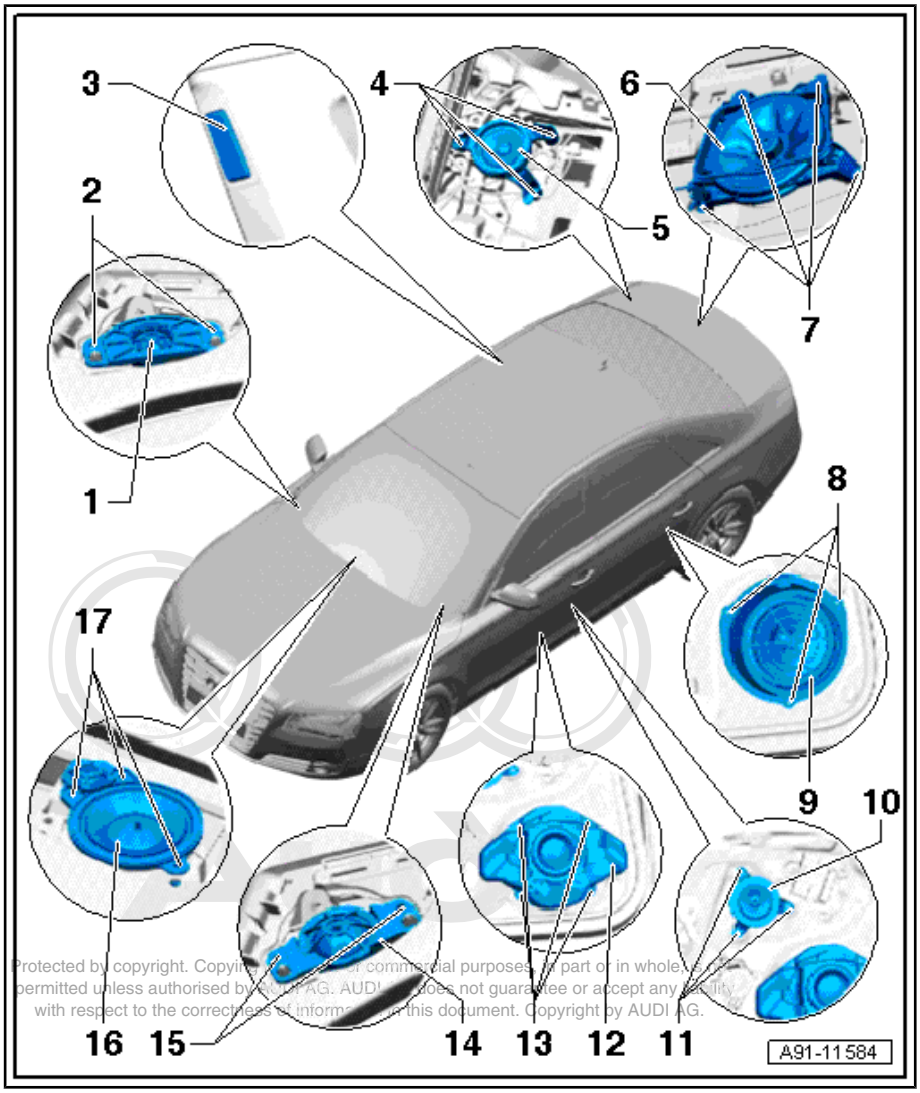

Protected by copyright. Copying for commercial purposes, in part or in whole, is not permitted unless authorised by AUDI AG. AUDI AG does not guarantee or accept any liability with respect to the correctness of information in this document. Copyright by AUDI AG.

1 - Front right treble loudspeaker - R22-

- ❑ Removing and installing (Standard) ⇒ page 64
- ❑ Removing and installing (BOSE) ⇒ page 65

2 - Bolt

- ❑ 2x
- ❑ 1.5 Nm

3 - Rear left treble loudspeaker - R14- / rear right treble loudspeaker - R16-

- ❑ Removing and installing ⇒ page 63

4 - Bolt

- ❑ 3x
- ❑ 2.5 Nm

5 - Left effect loudspeaker - R209- / right effect loudspeaker - R210- (BOSE)

- ❑ Removing and installing ⇒ page 72

6 - Subwoofer - R211-

- ❑ Removing and installing ⇒ page 70

7 - Bolt

- ❑ 4x
- ❑ 2.5 Nm

8 - Bolt

- ❑ 3x
- ❑ 3 Nm

9 - Rear left mid-range and bass loudspeaker - R159- / rear right mid-range and bass loudspeaker - R160-

- ❑ Removing and installing ⇒ page 68

10 - Front left mid-range loudspeaker - R103- / front right mid-range loudspeaker - R104-

- ❑ Removing and installing ⇒ page 67

11 - Bolt

- ❑ 3x
- ❑ 3 Nm

12 - Front left bass loudspeaker - R21- / front right bass loudspeaker - R23-

- ❑ Removing and installing ⇒ page 69

13 - Bolt

- ❑ 4x
- ❑ 3 Nm

14 - Front left treble loudspeaker - R20-

- ❑ Removing and installing (Standard) ⇒ page 64
- ❑ Removing and installing (BOSE) ⇒ page 65

15 - Bolt

- ❑ 2x
- ❑ 1.5 Nm

16 - Centre loudspeaker - R208-

- ❑ Removing and installing ⇒ page 73

17 - Bolt

- ❑ 3x
- ❑ 1.5 Nm

2.2.2 Overview of fitting locations - sound system, loudspeakers (Bang & Olufsen)

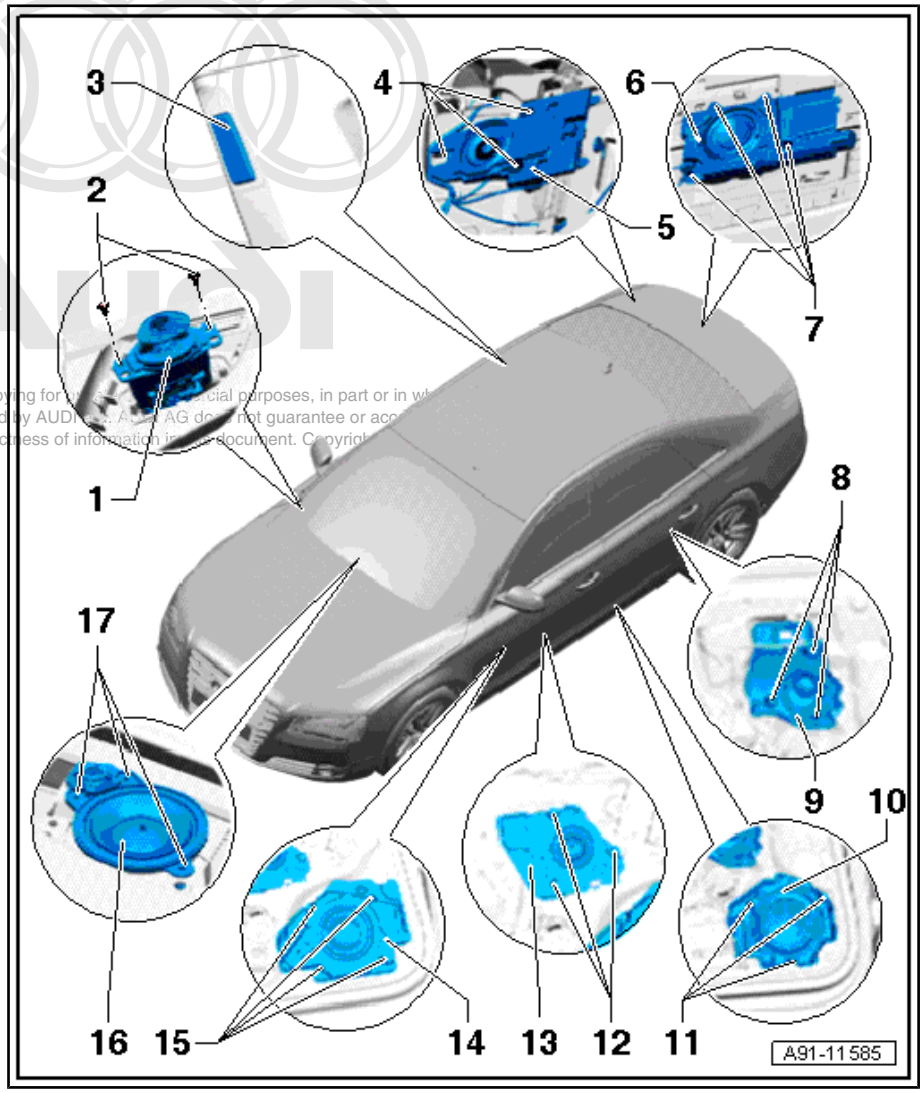

1 - Front right treble loudspeaker - R22- / front left treble loudspeaker - R20-

- ❑ With control motor for front left treble loudspeaker - V344- / control motor for front right treble loudspeaker - V345-
- ❑ Removing and installing ⇒ page 65

2 - Bolt

- ❑ 2x
- ❑ 1.5 Nm

Protected by copyright. Copying for commercial purposes, in part or in whole, is not permitted unless authorised by AUDI AG. AUDI AG does not guarantee or accept any liability with respect to the correctness of information in this document. Copyright by AUDI AG.

3 - Rear left treble loudspeaker - R14- / rear right treble loudspeaker - R16-

- ❑ Removing and installing ⇒ page 63

4 - Bolt

- ❑ 3x
- ❑ 3 Nm

5 - Left effect loudspeaker - R209- / right effect loudspeaker - R210-

- ❑ Removing and installing ⇒ page 72

- Rear left treble loudspeaker 2 - R217- / rear right treble loudspeaker 2 - R218-

- ❑ In housing of left effect loudspeaker - R209- / right effect loudspeaker - R210-
- ❑ Removing and installing ⇒ page 72

6 - Subwoofer - R211-

- ❑ Removing and installing ⇒ page 71

7 - Bolt

- ❑ 4x
- ❑ 3 Nm

8 - Bolt

- ❑ 3x
- ❑ 3 Nm

9 - Rear left mid-range loudspeaker - R105- / rear right mid-range loudspeaker - R106-

- ❑ Removing and installing ⇒ page 66

10 - Rear left bass loudspeaker - R15- / rear right bass loudspeaker - R17-

- ❑ Removing and installing ⇒ page 68

11 - Bolt

- ❑ 3x
- ❑ 3 Nm

12 - Bolt

- ❑ 3x
- ❑ 3 Nm

13 - Front left mid-range loudspeaker - R103- / front right mid-range loudspeaker - R104-

- ❑ Removing and installing ⇒ page 67

14 - Front left bass loudspeaker - R21- / front right bass loudspeaker - R23-

- ❑ Removing and installing ⇒ page 70

15 - Bolt

- ❑ 4x
- ❑ 3 Nm

16 - Centre loudspeaker - R208-

- ❑ Removing and installing ⇒ page 73

- Centre loudspeaker 2 - R219-

- ❑ In housing of centre loudspeaker - R208-
- ❑ Removing and installing ⇒ page 74

17 - Bolt

- ❑ 3x
- ❑ 1.5 Nm

Protected by copyright. Copying for private or commercial purposes, in part or in whole, is not permitted unless authorised by AUDI AG. AUDI AG does not guarantee or accept any liability with respect to the correctness of information in this document. Copyright by AUDI AG.

2.2.3 Overview of fitting locations - sound system, sound amplifiers, microphones, up to model year 2013, including vehicles with high-voltage electrical system

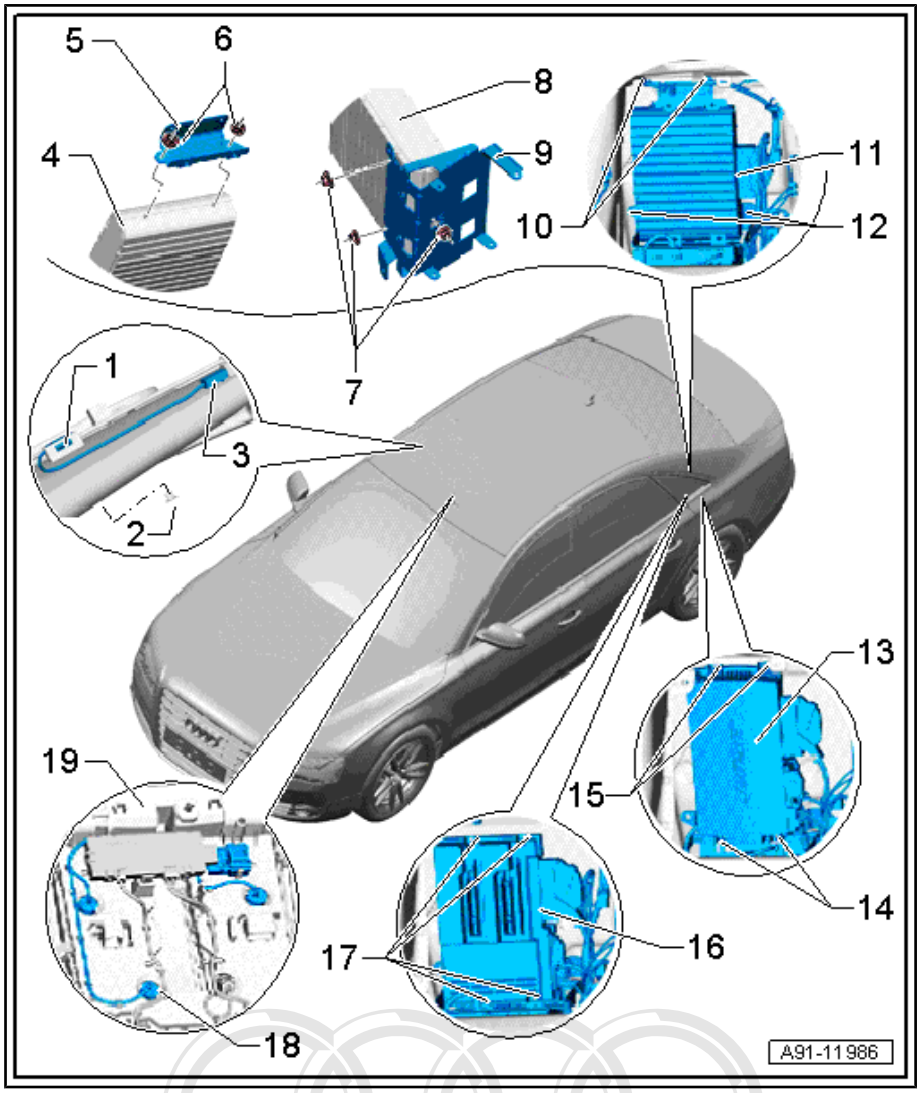

1 - ANC microphone with retaining plate
- ❑ 4x
- ❑ Overview ⇒ page 51
- ❑ Removing and installing ⇒ page 74

2 - Trim panel
- ❑ 4x

3 - Coupling to wiring harness
- ❑ 4x
- ❑ Overview ⇒ page 51

4 - Digital sound package control unit 2 - J787-
- ❑ Bang & Olufsen
- ❑ Pin assignment ⇒ page 79
- ❑ Removing and installing ⇒ page 59

5 - Bracket

6 - Nut
- ❑ 2x
- ❑ 4 Nm

7 - Nut
- ❑ 3x
- ❑ 4 Nm

8 - Digital sound package control unit 2 - J787-
- ❑ Bang & Olufsen

9 - Bracket

10 - Nut
- ❑ 2x
- ❑ 4 Nm

11 - Digital sound package control unit 2 - J787-
- ❑ Bang & Olufsen

12 - Nut
- ❑ 2x
- ❑ 4 Nm

13 - Digital sound package control unit - J525-
- ❑ BOSE
- ❑ Pin assignment ⇒ page 75
- ❑ Removing and installing ⇒ page 52

14 - Bolt
- ❑ 2x
- ❑ 3 Nm

Protected by copyright. Copying for private or commercial purposes, in part or in whole, is not permitted unless authorised by AUDI AG. AUDI AG does not guarantee or accept any liability with respect to the correctness of information in this document. Copyright by AUDI AG.

15 - Nut

- ❑ 2x
- ❑ 4 Nm

16 - Digital sound package control unit - J525-

- ❑ Bang & Olufsen
- ❑ Pin assignment ⇒ page 77
- ❑ Removing and installing ⇒ page 55

17 - Bolt

- ❑ 4x
- ❑ 4 Nm

18 - Internal microphone - R74-

- ❑ Overview ⇒ page 107

19 - Front interior light - W1-

- ❑ With microphone unit in front roof module - R164-
- ❑ See ⇒ Electrical system; Rep. gr. 96 ; Lights; Overview of fitting locations - lights in roof trim

Protected by copyright. Copying for private or commercial purposes, in part or in whole, is not permitted unless authorised by AUDI AG. AUDI AG does not guarantee or accept any liability with respect to the correctness of information in this document. Copyright by AUDI AG.

2.2.4 Overview of fitting locations - sound system, sound amplifiers, microphones, from model year 2014, excluding vehicles with high-voltage electrical system

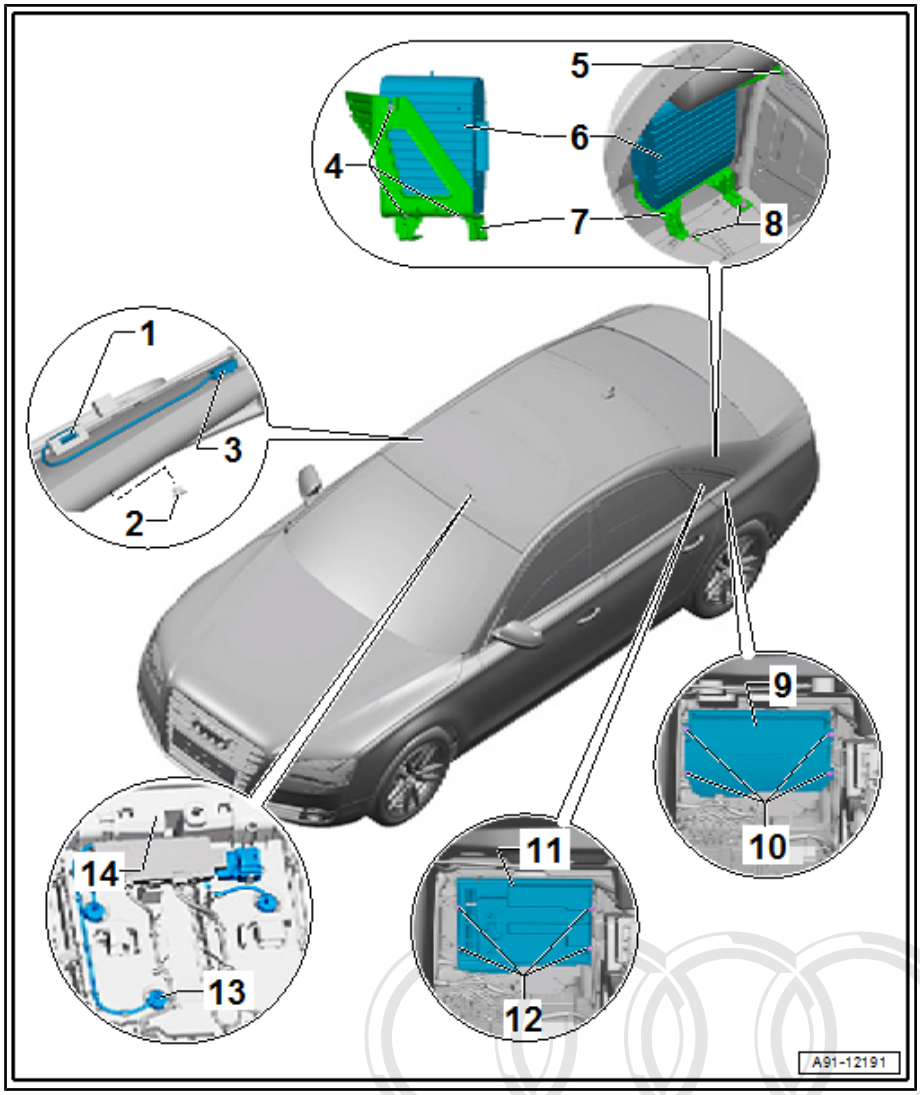

1 - ANC microphone with retaining plate
- ❑ 4x
- ❑ Overview ⇒ page 51
- ❑ Removing and installing ⇒ page 74

2 - Trim panel
- ❑ 4x

3 - Coupling to wiring harness
- ❑ 4x
- ❑ Overview ⇒ page 51

4 - Nut
- ❑ 3x
- ❑ 4 Nm

5 - Nut
- ❑ 6 Nm

6 - Digital sound package control unit 2 - J787-
- ❑ Bang & Olufsen
- ❑ Pin assignment ⇒ page 79
- ❑ Removing and installing ⇒ page 62

7 - Bracket

8 - Nut
- ❑ 2x
- ❑ 6 Nm

9 - Digital sound package control unit - J525-
- ❑ BOSE
- ❑ Pin assignment ⇒ page 75
- ❑ Removing and installing ⇒ page 54

10 - Bolt
- ❑ 4x
- ❑ 6 Nm

11 - Digital sound package control unit - J525-
- ❑ Bang & Olufsen
- ❑ Pin assignment ⇒ page 77
- ❑ Removing and installing ⇒ page 57

12 - Bolt
- ❑ 4x
- ❑ 6 Nm

13 - Internal microphone - R74-
- ❑ Overview ⇒ page 107

Protected by copyright. Copying for private or commercial purposes, in part or in whole, is not permitted unless authorised by AUDI AG. AUDI AG does not guarantee or accept any liability with respect to the correctness of information in this document. Copyright by AUDI AG.

14 - Front interior light - W1-

- ❑ With microphone unit in front roof module - R164-
- ❑ See ⇒ Electrical system; Rep. gr. 96 ; Lights; Overview of fitting locations - lights in roof trim

2.3 Overview of fitting locations - ANC microphones

The ANC (active noise cancellation) system consists of four additional microphones in the moulded headliner and special software in the digital sound package control unit - J525- (BOSE/ Bang & Olufsen).

ANC microphones

1 - Front interior light - W1- with internal microphone - R74-

2 - Centre left microphone - R142-

3 - Rear left microphone - R144-

4 - Rear right microphone - R145-

5 - Centre right microphone - R143-

The ANC microphones are equipped with a trailing cable. The connector is located in the moulded headliner.

To remove, moulded headliner must be lowered at the appropriate corner.

Removing and installing ANC microphones ⇒ page 74 .

Protected by copyright. Copying for private or commercial purposes, in part or in whole, is not permitted unless authorised by AUDI AG. AUDI AG does not guarantee or assume any liability with respect to the correctness of information in this document. Copyright by AUDI AG.

2.4 Removing and installing digital sound package control unit/amplifier

⇒ “2.4.1 Removing and installing digital sound package control unit J525 , BOSE, up to model year 2013, including vehicles with high-voltage electrical system”, page 52

⇒ “2.4.2 Removing and installing digital sound package control unit J525 , BOSE, from model year 2014, excluding vehicles with high-voltage electrical system”, page 54

⇒ “2.4.3 Removing and installing digital sound package control unit J525 , Bang & Olufsen, up to model year 2013, including vehicles with high-voltage electrical system”, page 55

⇒ “2.4.4 Removing and installing digital sound package control unit J525 , Bang & Olufsen, from model year 2014, excluding vehicles with high-voltage electrical system”, page 57

⇒ “2.4.5 Removing and installing digital sound package control unit 2 J787 , Bang & Olufsen, up to model year 2013, including vehicles with high-voltage electrical system”, page 59

⇒ “2.4.6 Removing and installing digital sound package control unit 2 J787 , Bang & Olufsen, from model year 2014, excluding vehicles with high-voltage electrical system”, page 62

Reproduction or copying of this document, in whole or in part, for private or commercial purposes, is not permitted unless authorized by AUDI AG. AUDI AG does not guarantee or accept any liability with respect to the correctness of information in this document. Copyright by AUDI AG.

2.4.1 Removing and installing digital sound package control unit - J525- , BOSE, up to model year 2013, including vehicles with high-voltage electrical system

The digital sound package control unit - J525- -1- is located in the luggage compartment on the back panel (left-side).

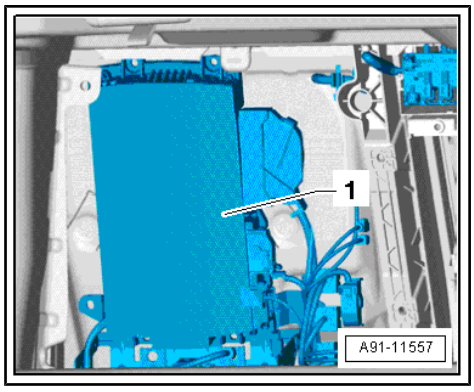

Special tools and workshop equipment required

- Protective cap for cable connector - VAS 6223/9-

Note

If control unit is to be renewed, select the "Replace control unit" function for appropriate control unit in ⇒ Vehicle diagnostic tester.

– Switch off ignition and all electrical equipment and remove ignition key.

Removing

– Remove luggage compartment back panel trim ⇒ General body repairs, interior; Rep. gr. 70 ; Luggage compartment trim panels; Exploded view - luggage compartment side trim .

– Release and unplug connectors -4- and -5- at digital sound package control unit - J525- -1-.

Protected by copyright. Copying for private or commercial purposes, in part or in whole, is not permitted unless authorised by AUDI AG. AUDI AG does not guarantee or assume liability with respect to the correctness of information in this document. Copyright by AUDI AG.

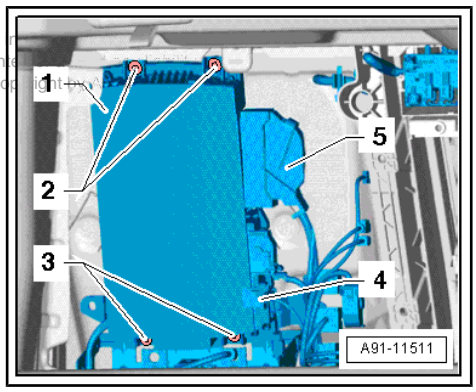

– Fit protective cap for cable connector - VAS 6223/9- -1- onto MOST bus connector -2-.

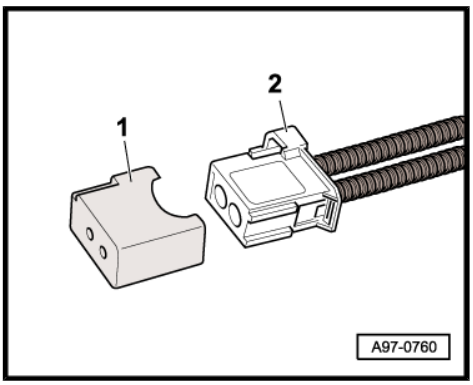

– Unscrew nuts -2- and bolts -3- at digital sound package control unit - J525- -1- and detach digital sound package control unit - J525- -1- from bracket.

Installing

– Install in reverse sequence of removal.

Tightening torques

◆ ⇒ "2.2.3 Overview of fitting locations - sound system, sound amplifiers, microphones, up to model year 2013, including vehicles with high-voltage electrical system", page 48

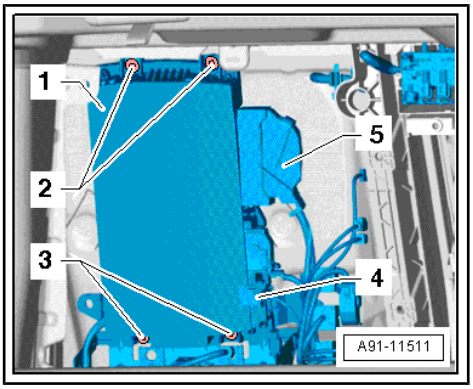

2.4.2 Removing and installing digital sound package control unit - J525- , BOSE, from model year 2014, excluding vehicles with high-voltage electrical system

The digital sound package control unit - J525- -1- is located in the luggage compartment on the back panel (left-side).

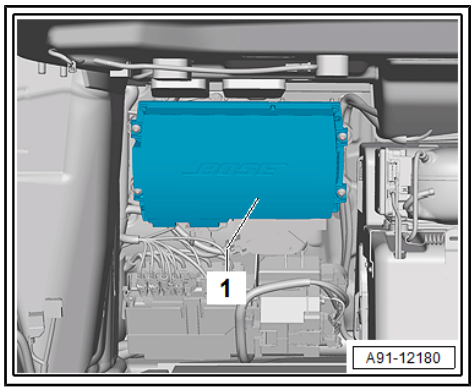

Special tools and workshop equipment required

- Protective cap for cable connector - VAS 6223/9-

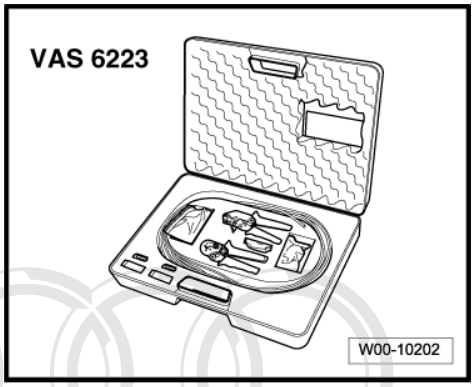

Note

If control unit is to be renewed, select the "Replace control unit" function for appropriate control unit in ⇒ Vehicle diagnostic tester.

– Switch off ignition and all electrical equipment and remove ignition key.

Protected by copyright. Copying for private or commercial purposes, in part or in whole, is not permitted unless authorised by AUDI AG. AUDI AG does not guarantee or accept any liability with respect to the correctness of information in this document. Copyright by AUDI AG.

Removing

– Remove luggage compartment back panel trim ⇒ General body repairs, interior; Rep. gr. 70 ; Luggage compartment trim panels; Exploded view - luggage compartment side trim .

– Release and unplug connectors at digital sound package control unit - J525- -1-.

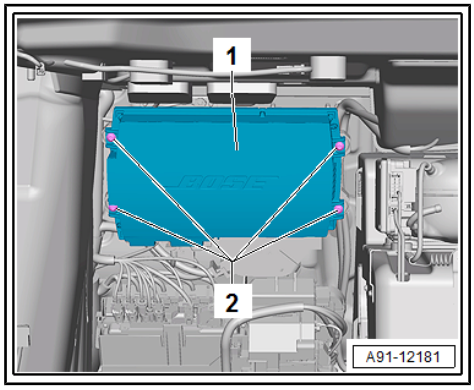

– Fit protective cap for cable connector - VAS 6223/9- -1- onto MOST bus connector -2-.

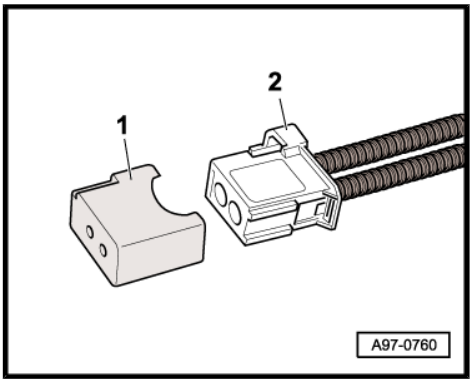

– Unscrew bolts -2- at digital sound package control unit - J525- -1- and detach digital sound package control unit - J525- -1- from bracket.

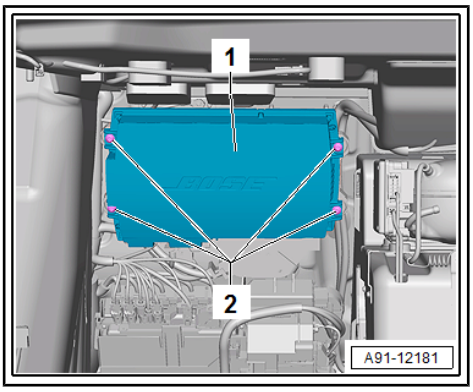

Installing

– Install in reverse sequence of removal.

Tightening torques

♦ ⇒ “2.2.4 Overview of fitting locations - sound system, sound amplifiers, microphones, from model year 2014, excluding vehicles with high-voltage electrical system”, page 50

2.4.3 Removing and installing digital sound package control unit - J525- , Bang & Olufsen, up to model year 2013, including vehicles with high-voltage electrical system

The digital sound package control unit - J525- -1- is located in the luggage compartment on the back panel (left-side).

Protected by copyright. Copying for private or commercial purposes, in part or in whole, is not permitted unless authorised by AUDI AG. AUDI AG does not guarantee or accept any liability with respect to the correctness of information in this document. Copyright by AUDI AG.

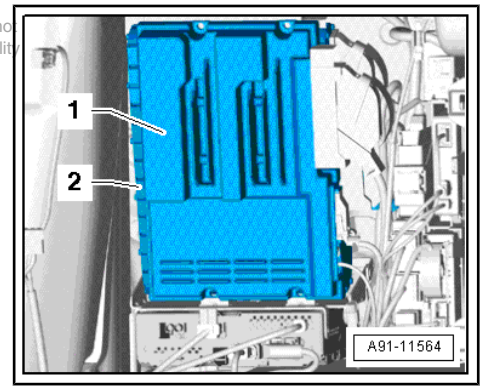

Special tools and workshop equipment required

♦ Protective cap for cable connector - VAS 6223/9-

Note

If control unit is to be renewed, select the "Replace control unit" function for appropriate control unit in ⇒ Vehicle diagnostic tester.

– Switch off ignition and all electrical equipment and remove ignition key.

Removing

– Remove luggage compartment back panel trim ⇒ General body repairs, interior; Rep. gr. 70 ; Luggage compartment trim panels; Exploded view - luggage compartment side trim .

– Release and unplug connectors -3-, -4- and -5- at digital sound package control unit - J525- -1-.

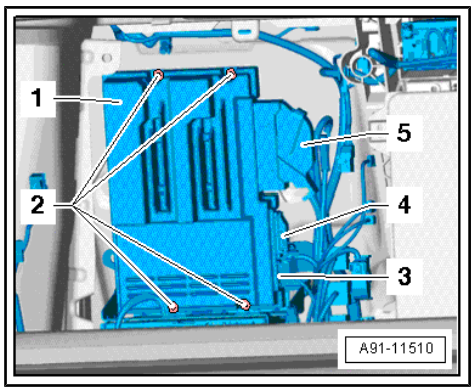

– Fit protective cap for cable connector - VAS 6223/9- -1- onto MOST bus connector -2-.

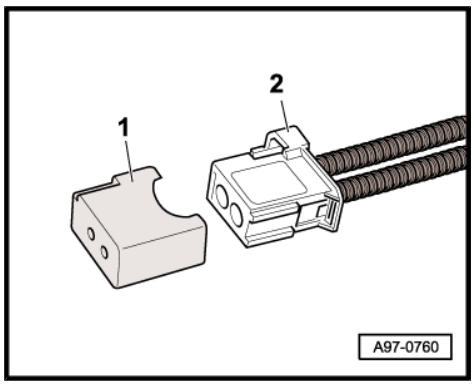

– Unscrew bolts -2- at digital sound package control unit - J525- -1- and detach digital sound package control unit - J525- -1- from bracket.

Installing

– Install in reverse sequence of removal.

Tightening torques

◆ ⇒ "2.2.3 Overview of fitting locations - sound system, sound amplifiers, microphones, up to model year 2013, including vehicles with high-voltage electrical system", page 48

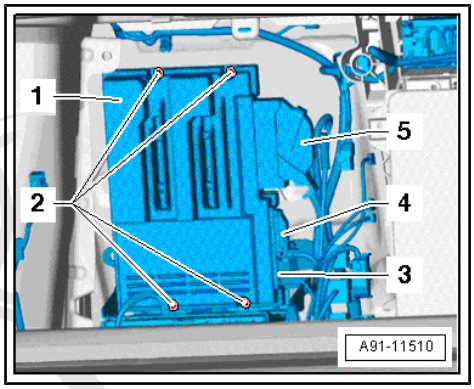

Protected by copyright. Copying for private or commercial purposes, in part or in whole, is not permitted unless authorised by AUDI AG. AUDI AG does not guarantee or accept any liability with respect to the correctness of information in this document. Copyright by AUDI AG.

2.4.4 Removing and installing digital sound package control unit - J525- , Bang & Olufsen, from model year 2014, excluding vehicles with high-voltage electrical system

The digital sound package control unit - J525- -1- is located in the luggage compartment on the back panel (left-side).

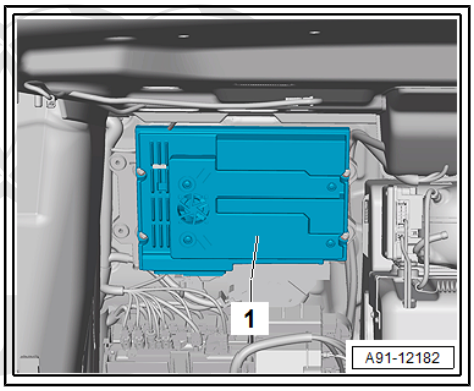

Special tools and workshop equipment required

Copyright by copyright. Copying for private or commercial purposes, in part or in whole, is not permitted unless authorised by AUDI AG. AUDI AG does not guarantee or accept any liability with respect to the correctness of information in this document. Copyright by AUDI AG.

- Protective cap for cable connector - VAS 6223/9-

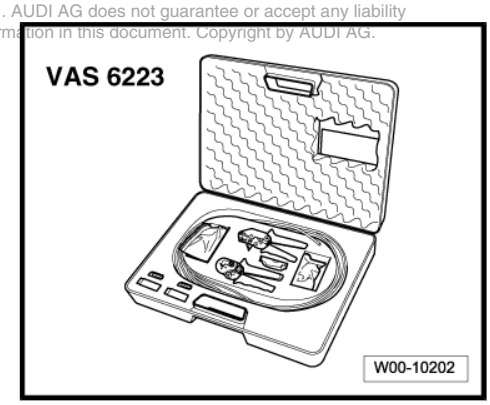

Note

If control unit is to be renewed, select the "Replace control unit" function for appropriate control unit in ⇒ Vehicle diagnostic tester.

– Switch off ignition and all electrical equipment and remove ignition key.

Removing

– Remove luggage compartment back panel trim ⇒ General body repairs, interior; Rep. gr. 70 ; Luggage compartment trim panels; Exploded view - luggage compartment side trim .

– Release and unplug connectors at digital sound package control unit - J525- -1-.

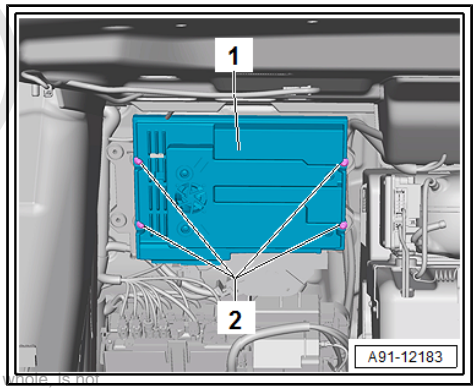

Protected by copyright. Copying for private or commercial purposes, in part or in whole, is not permitted unless authorised by AUDI AG. AUDI AG does not guarantee or accept any liability with respect to the correctness of information. Copyright by AUDI AG.

– Fit protective cap for cable connector - VAS 6223/9- -1- onto MOST bus connector -2-.

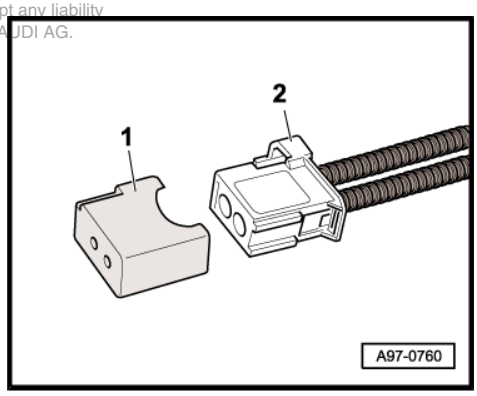

– Unscrew bolts -2- at digital sound package control unit - J525- -1- and detach digital sound package control unit - J525- -1- from bracket.

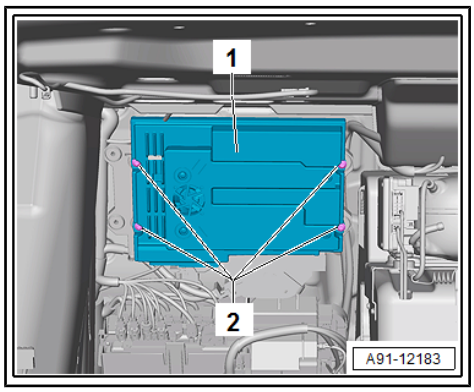

Installing

– Install in reverse sequence of removal.

Tightening torques

♦ ⇒ “2.2.4 Overview of fitting locations - sound system, sound amplifiers, microphones, from model year 2014, excluding vehicles with high-voltage electrical system”, page 50

2.4.5 Removing and installing digital sound package control unit 2 - J787- , Bang & Olufsen, up to model year 2013, including vehicles with high-voltage electrical system

The digital sound package control unit 2 - J787- -2- is located in the luggage compartment on the back panel (left-side) behind the digital sound package control unit - J525- -1-.

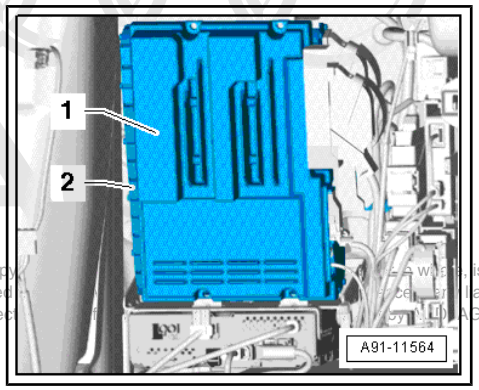

Note

If control unit is to be renewed, select the "Replace control unit" function for appropriate control unit in ⇒ Vehicle diagnostic tester.

Protected by copyright. Copy permitted unless authorised ... is not ... liability ... AG.

– Switch off ignition and all electrical equipment and remove ignition key.

Removing

– Remove luggage compartment back panel trim ⇒ General body repairs, interior; Rep. gr. 70 ; Luggage compartment trim panels; Exploded view - luggage compartment side trim .

First remove digital sound package control unit - J525- and then remove digital sound package control unit 2 - J787- with bracket.

– Release and unplug connectors -3-, -4- and -5- at digital sound package control unit - J525- -1-.

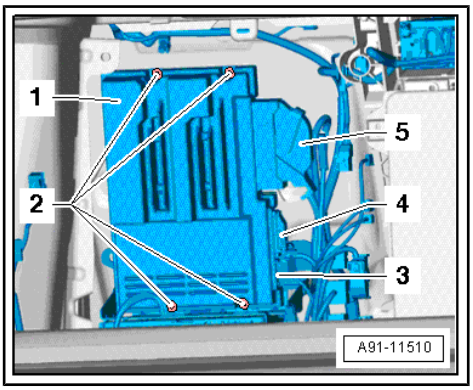

– Fit protective cap for cable connector - VAS 6223/9- -1- onto MOST bus connector -2-.

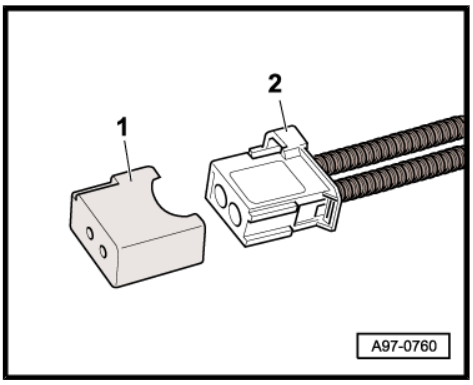

– Unscrew bolts -2- at digital sound package control unit - J525- -1- and detach digital sound package control unit - J525- -1- from bracket.

Then remove bracket with digital sound package control unit 2 - J787- .

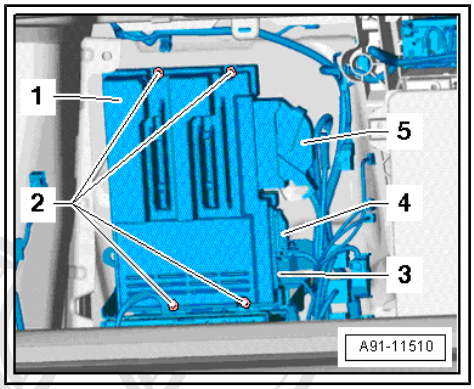

– Release and unplug connector -2- at digital sound package control unit 2 - J787- -1-.

– Release and unplug connectors on TV tuner - R78- .

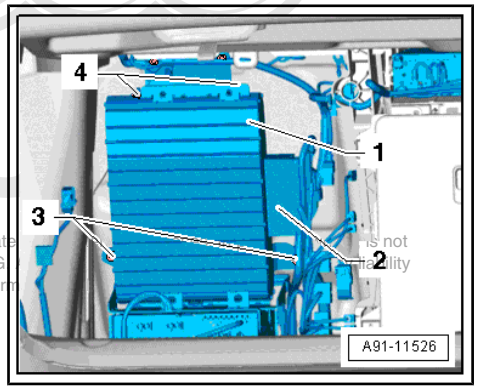

Protected by copyright. Copying for private
permitted unless authorised by AUDI AG
with respect to the correctness of infor
is not
ability

– Fit protective cap for cable connector - VAS 6223/9- -1- onto MOST bus connector -2-.

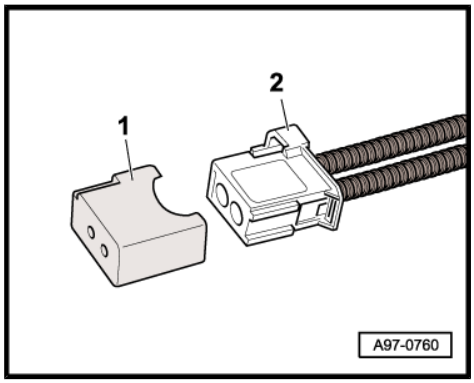

– Unscrew nuts -3- and -4- and detach bracket -1- with TV tuner - R78- and digital sound package control unit 2 - J787- from luggage compartment.

Remove bracket from digital sound package control unit 2 - J787- .

One securing nut is concealed by TV tuner - R78- .

– Remove TV tuner - R78- .

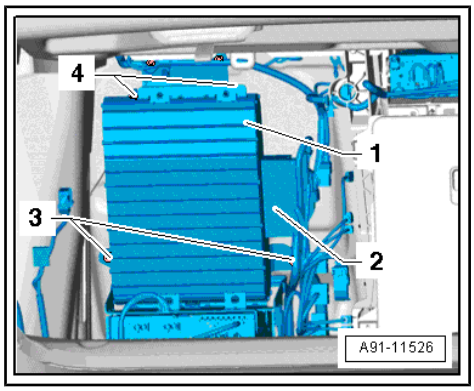

– Unscrew nuts -1- from bracket (top) -2- and detach bracket -2- from digital sound package control unit 2 - J787- -3-.

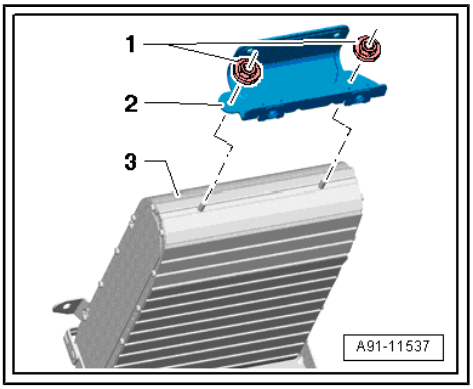

– Unscrew nuts -1- from bracket (bottom) -2- and detach bracket -2- from digital sound package control unit 2 - J787- -3-.

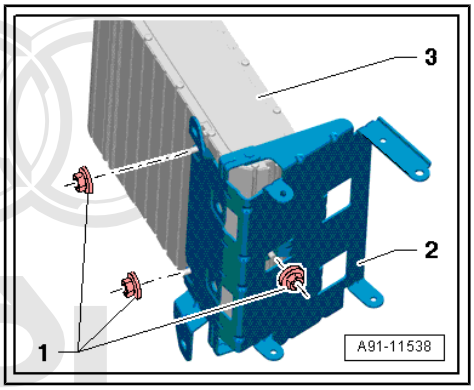

Installing

– Install in reverse sequence of removal.

Tightening torques

♦ ⇒ “2.2.3 Overview of fitting locations - sound system, sound amplifiers, microphones, up to model year 2013, including vehicles with high-voltage electrical system”, page 48

Protected by copyright. Copying for private or commercial purposes, in part or in whole, is not permitted unless authorised by AUDI AG. AUDI AG does not guarantee or accept any liability with respect to the correctness of information in this document. Copyright by AUDI AG.

2.4.6 Removing and installing digital sound package control unit 2 - J787- , Bang & Olufsen, from model year 2014, excluding vehicles with high-voltage electrical system

The digital sound package control unit - J787- -1- is located in the recess of the luggage compartment (left-side).

Item 2: Bracket for digital sound package control unit 2 - J787-

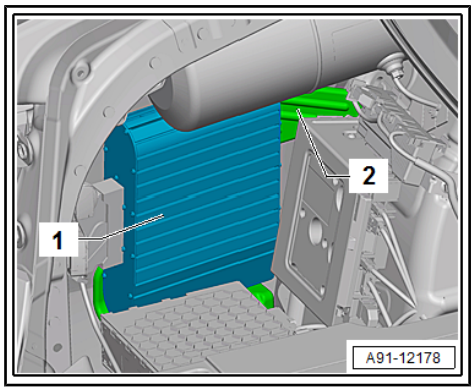

Note

If control unit is to be renewed, select the "Replace control unit" function for appropriate control unit in ⇒ Vehicle diagnostic tester.

– Switch off ignition and all electrical equipment and remove ignition key.

Removing

– Remove luggage compartment side trim (left-side) ⇒ General body repairs, interior; Rep. gr. 70 ; Luggage compartment trim panels; Overview of luggage compartment side trim .

Remove bracket with digital sound package control unit 2 - J787- as follows:

- Remove bracket with radio - R- ⇒ page 92 .
- Remove bracket with TV tuner - R78- ⇒ page 149 .
- Remove control unit for electromechanical parking brake - J540- ⇒ Brake system; Rep. gr. 46 ; Parking brake; Removing and installing control unit for electromechanical parking brake - J540- .

Then remove bracket with digital sound package control unit 2 - J787- .

– Release and unplug connector at digital sound package control unit 2 - J787- -1-.

– Unscrew nuts -3- and remove bracket -2- with digital sound package control unit 2 - J787- -1- from luggage compartment.

Remove bracket from digital sound package control unit 2 - J787- .

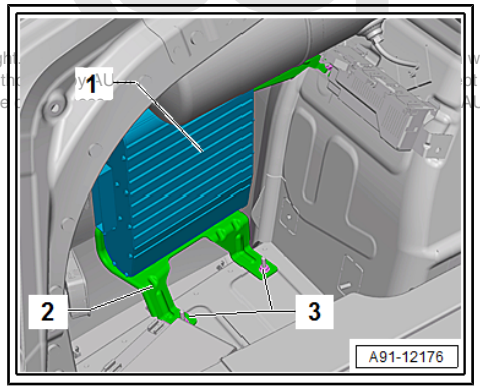

Protected by copyright. Copying for any purpose, in whole or in part, is not permitted unless authorised by AUDI AG. No liability can be accepted with respect to the accuracy of the information. © AUDI AG.

– Unscrew nuts -3- from bracket and detach bracket -2- from digital sound package control unit 2 - J787- -1-.

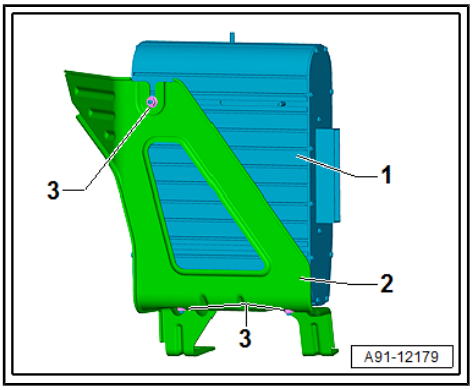

Installing

– Install in reverse sequence of removal.

Tightening torques

◆ ⇒ "2.2.4 Overview of fitting locations - sound system, sound amplifiers, microphones, from model year 2014, excluding vehicles with high-voltage electrical system", page 50

2.5 Removing and installing rear treble loudspeakers -R14- / -R16-

⇒ "2.5.1 Removing and installing rear treble loudspeakers R14 / R16 ", page 63

⇒ "2.5.2 Removing and installing rear treble loudspeakers 2 R217 / R218 (Bang & Olufsen)", page 64

2.5.1 Removing and installing rear treble loudspeakers -R14- / -R16-

The rear left treble loudspeaker - R14- and the rear right treble loudspeaker - R16- -1- are located in the B-pillars.

The removal and installation procedure is similar for all components.

– Switch off ignition and all electrical equipment and remove ignition key.

Removing

– Remove B-pillar trim (bottom) ⇒ General body repairs, interior; Rep. gr. 70 ; Passenger compartment trim panels; Exploded view - B-pillar trim .

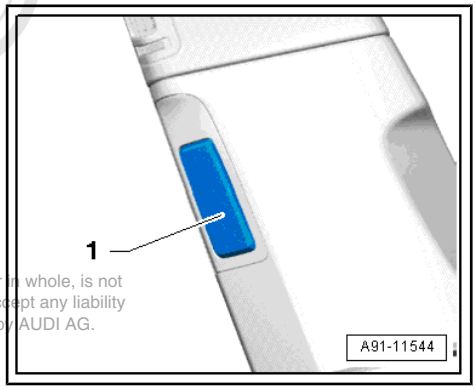

Copyright by AUDI AG.
This document is protected by copyright. Reproduction in part or in whole, is not permitted without prior consent of AUDI AG. AUDI AG does not guarantee or accept any liability with respect to the correctness of information in this document. Copyright by AUDI AG.

– Release and unplug electrical connector -2- at rear left treble loudspeaker - R14- -1-.

– Press rear left treble loudspeaker - R14- -1- out of retaining tabs and remove it from trim.

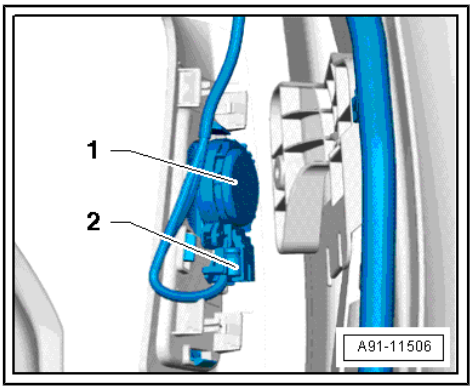

Installing

– Install in reverse sequence of removal.

2.5.2 Removing and installing rear treble loudspeakers 2 -R217- / -R218- (Bang & Olufsen)

The rear left treble loudspeaker 2 - R217- -1- and the rear right treble loudspeaker 2 - R218- -3- are located in the rear shelf (left and right).

Both loudspeakers are fitted in housing of left effect loudspeaker - R209- -1- / right effect loudspeaker - R210- -3- and cannot be renewed separately. Renew left effect loudspeaker - R209- / right effect loudspeaker - R210- (Bang & Olufsen).

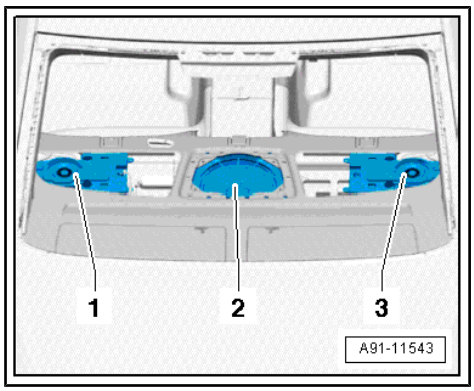

2.6 Removing and installing front treble loudspeakers -R20- / -R22-

⇒ "2.6.1 Removing and installing front treble loudspeakers R20 / R22 (Standard)", page 64

⇒ "2.6.2 Removing and installing front treble loudspeakers R20 / R22 (BOSE)", page 65

⇒ "2.6.3 Removing and installing front treble loudspeakers R20 / V344 / R22 / V345 (Bang & Olufsen)", page 65

2.6.1 Removing and installing front treble loudspeakers -R20- / -R22- (Standard)

The front left treble loudspeaker - R20- -1- and the front right treble loudspeaker - R22- -3- are located in the dash panel (front).

The removal and installation procedure is similar for all components.

– Switch off ignition and all electrical equipment and remove ignition key.

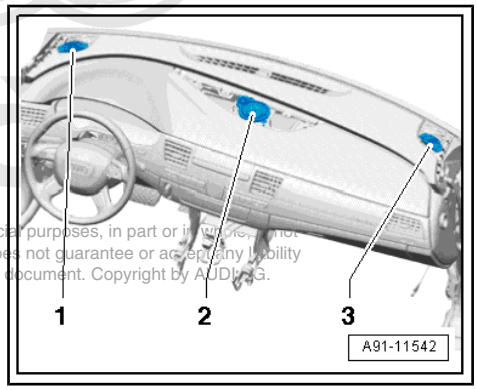

Removing

– Remove side loudspeaker trim ⇒ General body repairs, interior; Rep. gr. 70 ; Dash panel; Exploded view - dash panel .

Protected by copyright. Copying for private or commercial purposes, in part or in whole, is not permitted unless authorised by AUDI AG. AUDI AG does not guarantee or accept any liability with respect to the correctness of information in this document. Copyright by AUDI AG.

– Remove bolts -2- at front left treble loudspeaker - R20- -1- and lift front left treble loudspeaker - R20- -1- off centring pins -3-.

– Release and unplug connector at front left treble loudspeaker - R20- -1-.

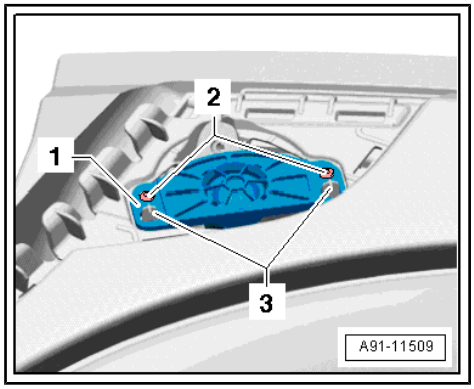

Installing

– Install in reverse sequence of removal.

Tightening torques

♦ ⇒ "2.2.1 Overview of fitting locations - sound system, loudspeakers (Standard/BOSE)", page 44

2.6.2 Removing and installing front treble loudspeakers -R20- / -R22- (BOSE)

The front left treble loudspeaker - R20- -1- and the front right treble loudspeaker - R22- -3- are located in the dash panel (front).

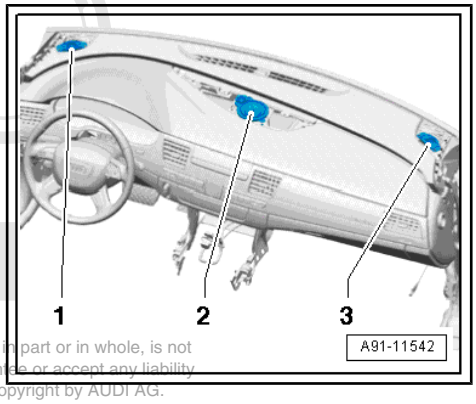

The removal and installation procedure is similar for all components.

– Switch off ignition and all electrical equipment and remove ignition key.

Removing

– Remove side loudspeaker trim ⇒ General body repairs, interior; Rep. gr. 70 ; Dash panel; Exploded view - dash panel .

Protected by copyright. Copying for private or commercial purposes, in part or in whole, is not permitted unless authorised by AUDI AG. AUDI AG does not guarantee or accept any liability with respect to the correctness of information in this document. Copyright by AUDI AG.

– Remove bolts -2- at front left treble loudspeaker - R20- -1- and lift front left treble loudspeaker - R20- -1- off centring pins -3-.

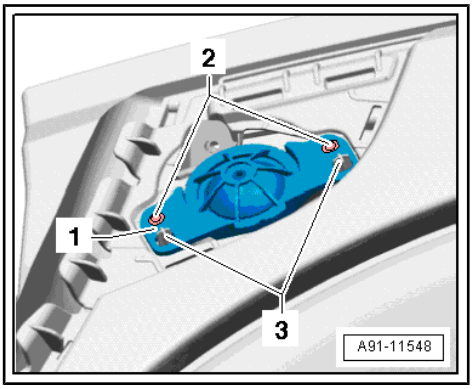

– Release and unplug connector at front left treble loudspeaker - R20- -1-.

Installing

– Install in reverse sequence of removal.

Tightening torques

◆ ⇒ “2.2.1 Overview of fitting locations - sound system, loudspeakers (Standard/BOSE)”, page 44

2.6.3 Removing and installing front treble loudspeakers -R20- / -V344- / -R22- / -V345- (Bang & Olufsen)

The front left treble loudspeaker - R20- -1- and the front right treble loudspeaker - R22- -3- are located in the dash panel (front).

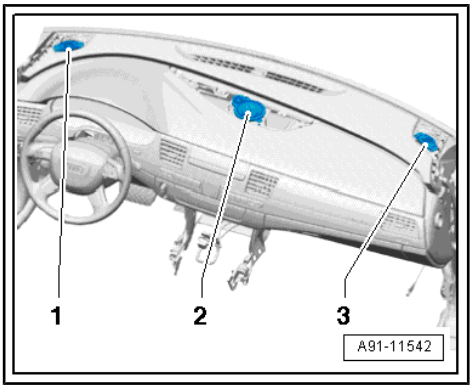

The removal and installation procedure is similar for all components.

The control motor for front left treble loudspeaker - V344- / control motor for front right treble loudspeaker - V345- is integrated in the front left treble loudspeaker - R20- -1-/ front right treble loudspeaker - R22- . The control motors cannot be renewed separately.

– Switch off ignition and all electrical equipment and remove ignition key.

Removing

– Remove side loudspeaker trim ⇒ General body repairs, interior; Rep. gr. 70 ; Dash panel; Exploded view - dash panel .

– Remove bolts -1- at front left treble loudspeaker - R20- -2- and lift front left treble loudspeaker - R20- -2- off centring pins -3-.

– Release and unplug connectors at front left treble loudspeaker - R20- -2-.

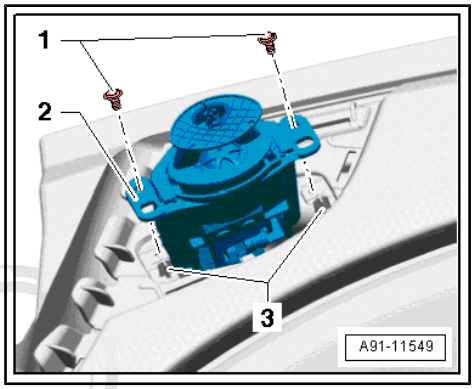

Installing

– Install in reverse sequence of removal.

Tightening torques

♦ ⇒ "2.2.2 Overview of fitting locations - sound system, loudspeakers (Bang & Olufsen)", page 46

2.7 Removing and installing rear mid-range loudspeaker

⇒ "2.7.1 Removing and installing rear mid-range loudspeakers R105 / R106 (Bang & Olufsen)", page 66

2.7.1 Removing and installing rear mid-range loudspeakers -R105- / -R106- (Bang & Olufsen)

Protected by copyright. Copying for private or commercial purposes, in part or in whole, is not permitted unless authorised by AUDI AG. AUDI AG does not guarantee or accept any liability with respect to the correctness of information in this document. Copyright by AUDI AG.

The rear left mid-range loudspeaker - R105- and the rear right mid-range loudspeaker - R106- -1- are located in the rear doors (centre).

The removal and installation procedure is similar for all components.

– Switch off ignition and all electrical equipment and remove ignition key.

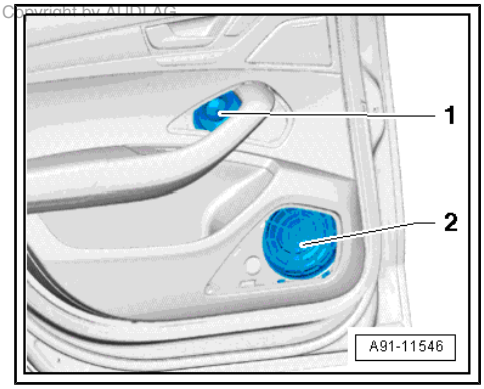

Removing

– Remove rear door trim ⇒ General body repairs, interior; Rep. gr. 70 ; Door trim (rear); Exploded view - door trim (rear) .

– Release and unplug electrical connector -3- at rear left mid-range loudspeaker - R105- -1-.

– Unscrew bolts -2- and remove rear left mid-range loudspeaker - R105- -1-.

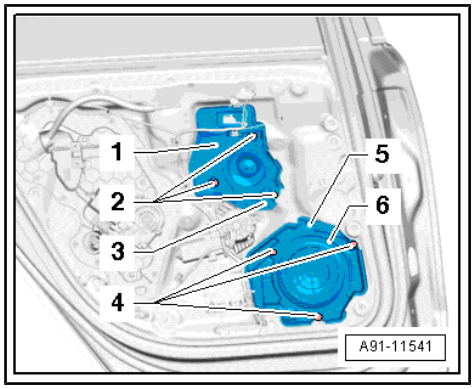

Installing

– Install in reverse sequence of removal.

Tightening torques

♦ ⇒ "2.2.2 Overview of fitting locations - sound system, loudspeakers (Bang & Olufsen)", page 46

2.8 Removing and installing front mid-range loudspeakers

⇒ "2.8.1 Removing and installing front mid-range loudspeakers R103 / R104 ", page 67

⇒ "2.8.2 Removing and installing front mid-range loudspeakers R103 / R104 (Bang & Olufsen)", page 67

2.8.1 Removing and installing front mid-range loudspeakers -R103- / -R104-

The front left mid-range loudspeaker - R103- and the front right mid-range loudspeaker - R104- -1- are located in the front doors (centre).

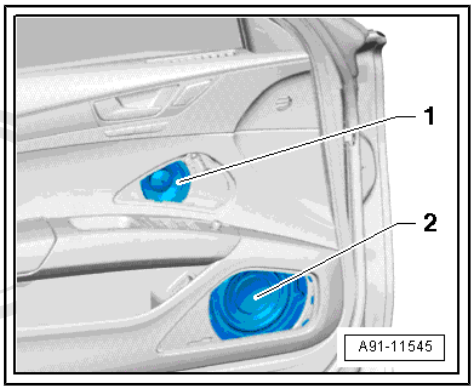

The removal and installation procedure is similar for all components.

– Switch off ignition and all electrical equipment and remove ignition key.

Removing

– Remove front door trim ⇒ General body repairs, interior; Rep. gr. 70 ; Door trim (front); Exploded view - door trim (front) .

– Release and unplug connector at front left mid-range loudspeaker - R103- -1-.

– Remove bolts -2-.

– Detach front left mid-range loudspeaker - R103- -1-.

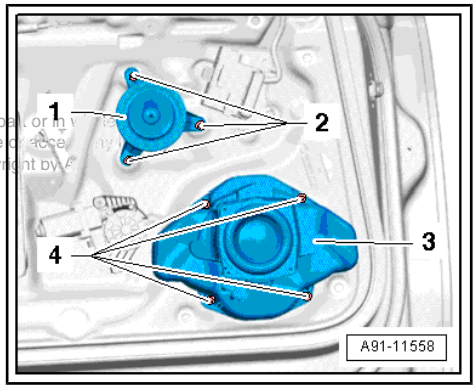

Protected by copyright. Copying for private or commercial purposes, in part or in whole, is not permitted unless authorised by AUDI AG. AUDI AG does not guarantee or accept any liability with respect to the correctness of information in this document. Copyright by AUDI AG.

Installing

– Install in reverse sequence of removal.

Tightening torques

♦ ⇒ "2.2.1 Overview of fitting locations - sound system, loudspeakers (Standard/BOSE)", page 44

2.8.2 Removing and installing front mid-range loudspeakers -R103- / -R104- (Bang & Olufsen)

The front left mid-range loudspeaker - R103- and the front right mid-range loudspeaker - R104- -1- are located in the front doors (centre).

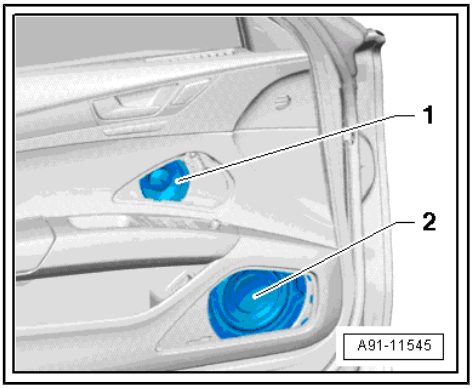

The removal and installation procedure is similar for all components.

– Switch off ignition and all electrical equipment and remove ignition key.

Removing

– Remove front door trim ⇒ General body repairs, interior; Rep. gr. 70 ; Door trim (front); Exploded view - door trim (front) .

– Release and unplug electrical connector -3- at front left mid-range loudspeaker - R103- -1-.

– Remove bolts -2-.

– Detach front left mid-range loudspeaker - R103- -1-.

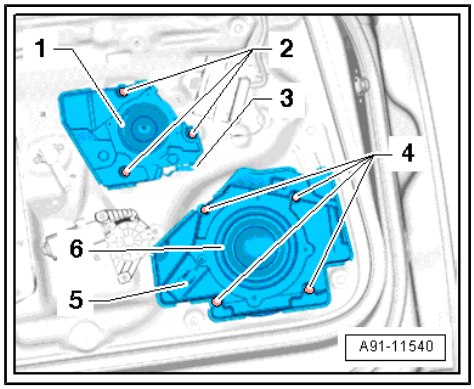

Installing

– Install in reverse sequence of removal.

Tightening torques

♦ ⇒ “2.2.2 Overview of fitting locations - sound system, loudspeakers (Bang & Olufsen)”, page 46

2.9 Removing and installing rear mid-range and bass loudspeakers

The rear left mid-range and bass loudspeaker - R159- and the rear right mid-range and bass loudspeaker - R160- -2- are located in the rear doors (bottom).

The removal and installation procedure is similar for all components.

– Switch off ignition and all electrical equipment and remove ignition key.

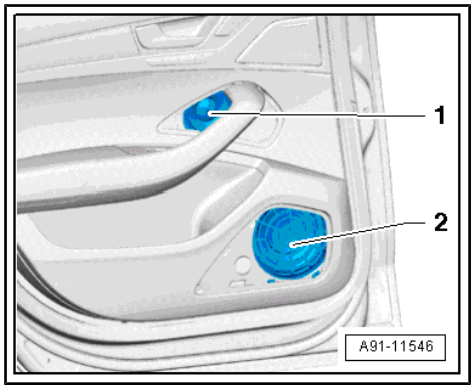

Removing

– Remove rear door trim ⇒ General body repairs, interior; Rep. gr. 70 ; Door trim (rear); Exploded view - door trim (rear) .

– Release and unplug connector at rear left mid-range and bass loudspeaker - R159- -1-.

– Unscrew bolts -2- and remove rear left mid-range and bass loudspeaker - R159- -1-.

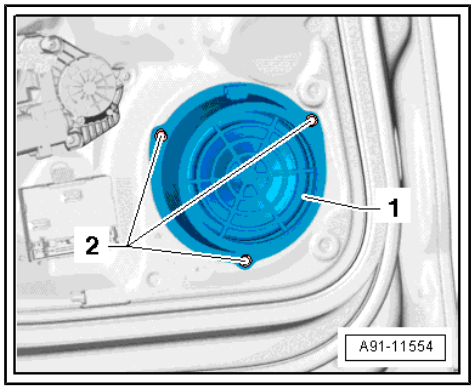

Installing

– Install in reverse sequence of removal.

Tightening torques

♦ ⇒ “2.2.1 Overview of fitting locations - sound system, loudspeakers (Standard/BOSE)”, page 44

2.10 Removing and installing rear bass loudspeakers -R15- / -R17-

The rear left bass loudspeaker - R15- and the rear right bass loudspeaker - R17- -2- are located in the rear doors (bottom).

The removal and installation procedure is similar for all components.

– Switch off ignition and all electrical equipment and remove ignition key.

Protected by copyright. Copying for private or commercial purposes, in part or in whole, is permitted unless authorised by AUDI AG. AUDI AG does not guarantee or accept any liability with respect to the correctness of information in this document. Copyright by AUDI AG.

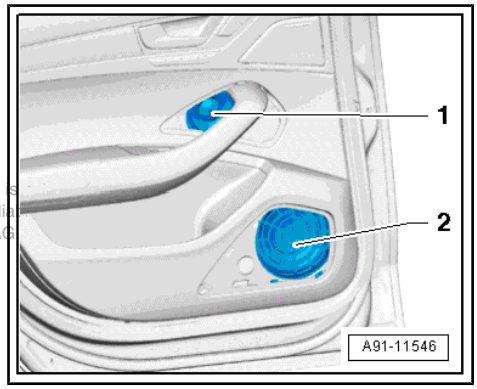

Removing

– Remove rear door trim ⇒ General body repairs, interior; Rep. gr. 70 ; Door trim (rear); Exploded view - door trim (rear) .

– Release and unplug electrical connector -5- at rear left bass loudspeaker - R15- -6-.

– Unscrew bolts -4- and remove rear left bass loudspeaker - R15- -6-.

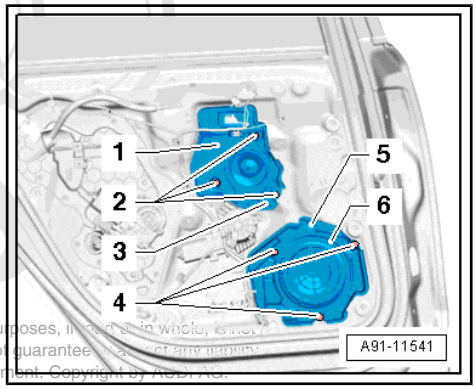

Installing

– Install in reverse sequence of removal.

Tightening torques

♦ ⇒ "2.2.2 Overview of fitting locations - sound system, loudspeakers (Bang & Olufsen)", page 46

Protected by copyright. Copying for private or commercial purposes, in part or in whole, is not permitted unless authorised by AUDI AG. AUDI AG does not guarantee or assume any liability with respect to the correctness of information in this document. Copyright by AUDI AG.

2.11 Removing and installing front bass loudspeakers -R21- / -R23-

⇒ "2.11.1 Removing and installing front bass loudspeakers R21 / R23 ", page 69

⇒ "2.11.2 Removing and installing front bass loudspeakers R21 / R23 (Bang & Olufsen)", page 70

2.11.1 Removing and installing front bass loudspeakers -R21- / -R23-

The front left bass loudspeaker - R21- and the front right bass loudspeaker - R23- -2- are located in the front doors (bottom).

The removal and installation procedure is similar for all components.

– Switch off ignition and all electrical equipment and remove ignition key.

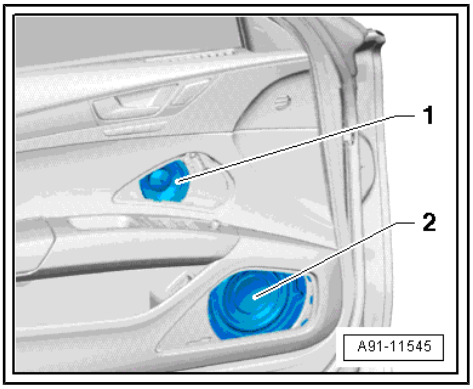

Removing

– Remove front door trim ⇒ General body repairs, interior; Rep. gr. 70 ; Door trim (front); Exploded view - door trim (front) .

– Release and unplug connector at front left bass loudspeaker - R21- -3-.

– Remove bolts -4-.

– Detach front left bass loudspeaker - R21- -3-.

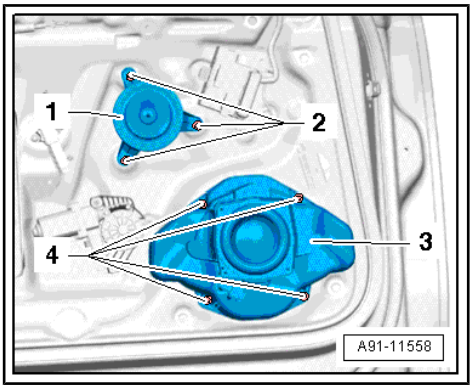

Installing

– Install in reverse sequence of removal.

Tightening torques

♦ ⇒ "2.2.1 Overview of fitting locations - sound system, loudspeakers (Standard/BOSE)", page 44

2.11.2 Removing and installing front bass loudspeakers -R21- / -R23- (Bang & Olufsen)

The front left bass loudspeaker - R21- and the front right bass loudspeaker - R23- -2- are located in the front doors (bottom).

The removal and installation procedure is similar for all components.

– Switch off ignition and all electrical equipment and remove ignition key.

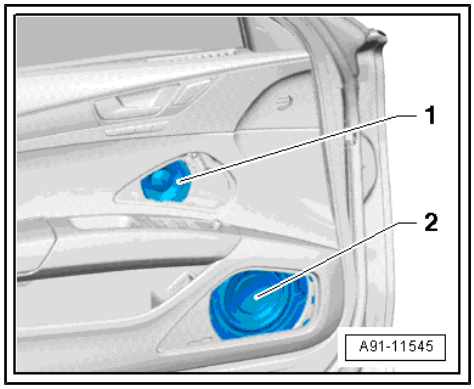

Removing

This document is copyright. Copying for private or commercial purposes, in part or in whole, is not permitted unless authorised by AUDI AG. AUDI AG does not guarantee or accept any liability with respect to the correctness of information in this document. Copyright by AUDI AG.

– Remove front door trim ⇒ General body repairs, interior; Rep. gr. 70 ; Door trim (front); Exploded view - door trim (front) .

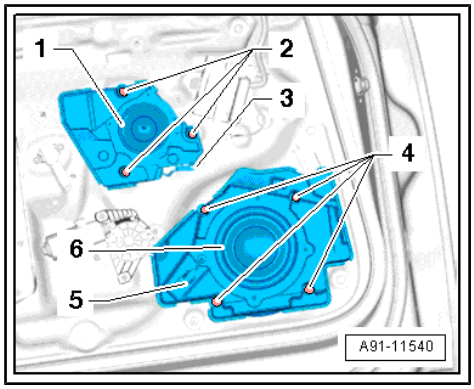

– Release and unplug connector -5- at front left bass loudspeaker - R21- -6-.

– Remove bolts -4-.

– Detach front left bass loudspeaker - R21- -6-.

Installing

– Install in reverse sequence of removal.

Tightening torques

♦ ⇒ “2.2.2 Overview of fitting locations - sound system, loudspeakers (Bang & Olufsen)”, page 46

2.12 Removing and installing subwoofer - R211-

⇒ “2.12.1 Removing and installing subwoofer R211 (Standard/BOSE)”, page 70

⇒ “2.12.2 Removing and installing subwoofer R211 (Bang & Olufsen)”, page 71

2.12.1 Removing and installing subwoofer - R211- (Standard/BOSE)

The subwoofer - R211- -2- is located in the rear shelf (centre).

– Switch off ignition and all electrical equipment and remove ignition key.

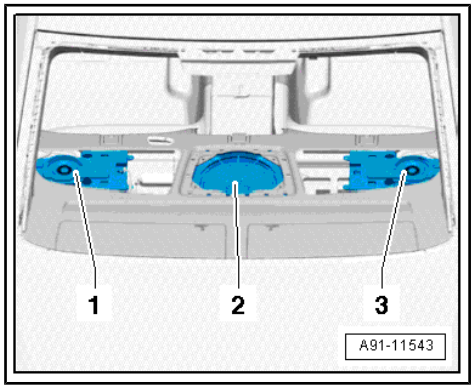

Removing

– Remove rear shelf ⇒ General body repairs, interior; Rep. gr. 70 ; Passenger compartment trim panels; Exploded view - rear shelf .

– Release and unplug connector -3- at subwoofer - R211- -2-.
– Remove bolts -1- on subwoofer - R211- -2-.
– Lift out subwoofer - R211- -2-.

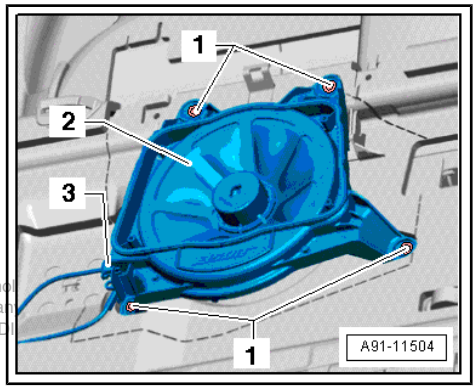

Installing

– Install in reverse sequence of removal.

Tightening torques

♦ ⇒ “2.2.1 Overview of fitting locations - sound system, loudspeakers (Standard/BOSE)”, page 44

Protected by copyright. Copying for private or commercial purposes, in part or in whole, is not permitted unless authorised by AUDI AG. AUDI AG does not guarantee or accept any liability with respect to the correctness of information in this document. Copyright by AUDI AG.

2.12.2 Removing and installing subwoofer - R211- (Bang & Olufsen)

The subwoofer - R211- -2- is located in the rear shelf (centre).

– Switch off ignition and all electrical equipment and remove ignition key.

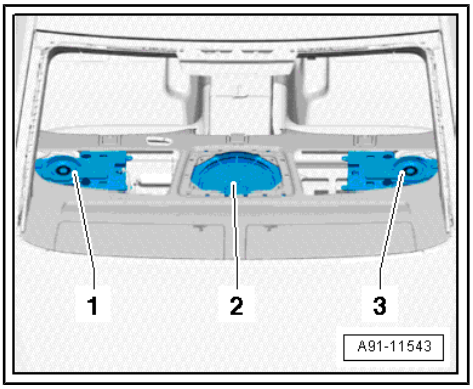

Removing

– Remove rear shelf ⇒ General body repairs, interior; Rep. gr. 70 ; Passenger compartment trim panels; Exploded view - rear shelf .

– Release and unplug connector -3- at subwoofer - R211- -2-.
– Remove bolts -1- on subwoofer - R211- -2-.
– Lift out subwoofer - R211- -2-.

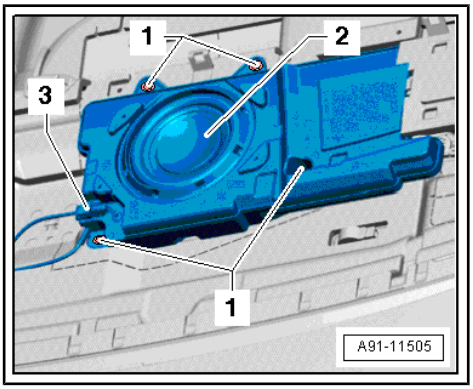

Installing

– Install in reverse sequence of removal.

Tightening torques

♦ ⇒ “2.2.2 Overview of fitting locations - sound system, loudspeakers (Bang & Olufsen)”, page 46

2.13 Removing and installing effect loudspeakers

⇒ “2.13.1 Removing and installing effect loudspeakers R209 / R210 (BOSE)”, page 72

⇒ “2.13.2 Removing and installing effect loudspeakers R209 / R210 (Bang & Olufsen)”, page 72

2.13.1 Removing and installing effect loudspeakers -R209- / -R210- (BOSE)

The left effect loudspeaker - R209- -1- and the right effect loudspeaker - R210- -3- are located in the rear shelf (left and right).

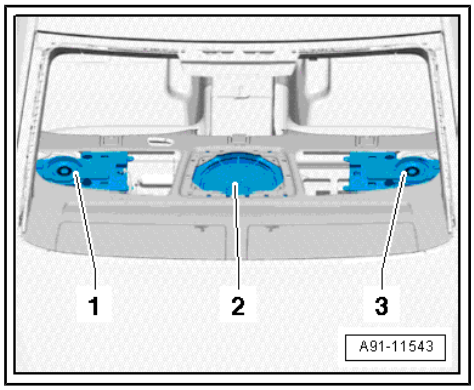

The removal and installation procedure is similar for all components.

– Switch off ignition and all electrical equipment and remove ignition key.

Removing

– Remove rear shelf ⇒ General body repairs, interior; Rep. gr. 70 ; Passenger compartment trim panels; Exploded view - rear shelf .

– Release and unplug connector at left effect loudspeaker - R209- .

– Unscrew bolts -2- at left effect loudspeaker - R209- -1-.

– Detach left effect loudspeaker - R209- -1- from rear shelf.

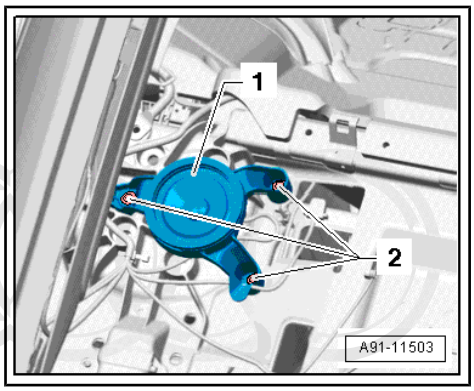

Installing

– Install in reverse sequence of removal.

Tightening torques

♦ ⇒ “2.2.1 Overview of fitting locations - sound system, loudspeakers (Standard/BOSE)”, page 44

2.13.2 Removing and installing effect loudspeakers -R209- / -R210- (Bang & Olufsen)

The left effect loudspeaker - R209- -1- and the right effect loudspeaker - R210- -3- are located in the rear shelf (left and right).

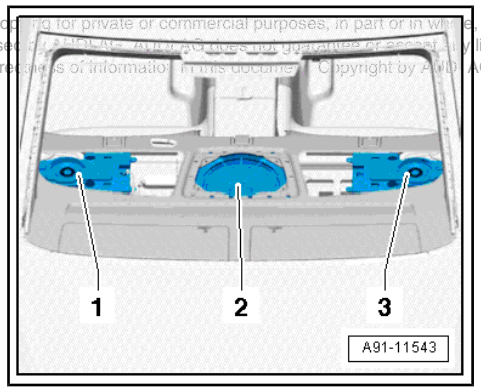

Copyright. Copying for private or commercial purposes, in part or in whole, is not permitted unless authorised by AUDI AG. AUDI AG does not guarantee or assume any liability with respect to the correctness of information in this document. Copyright by AUDI AG.

The removal and installation procedure is similar for all components.

– Switch off ignition and all electrical equipment and remove ignition key.

Removing

– Remove rear shelf ⇒ General body repairs, interior; Rep. gr. 70 ; Passenger compartment trim panels; Exploded view - rear shelf .

– Release and unplug connector at left effect loudspeaker - R209- .

– Unscrew bolts -1- at left effect loudspeaker - R209- -2-.

– Detach left effect loudspeaker - R209- -2- from rear shelf.

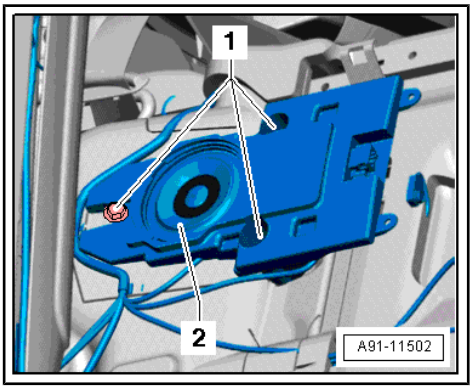

Installing

– Install in reverse sequence of removal.

Tightening torques

♦ ⇒ "2.2.2 Overview of fitting locations - sound system, loudspeakers (Bang & Olufsen)", page 46

2.14 Removing and installing centre loudspeaker

⇒ "2.14.1 Removing and installing centre loudspeaker R208 ", page 73

⇒ "2.14.2 Removing and installing centre loudspeaker 2 R219 (Bang & Olufsen)", page 74

2.14.1 Removing and installing centre loudspeaker - R208-

The centre loudspeaker - R208- -2- is located in the dash panel (front centre).

– Switch off ignition and all electrical equipment and remove ignition key.

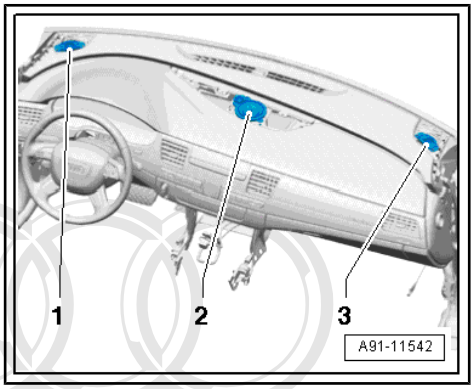

Removing

– Remove dash panel loudspeaker trim (centre) ⇒ General body repairs, interior; Rep. gr. 70 ; Dash panel; Exploded view - dash panel .

– Remove bolts -1- on centre loudspeaker - R208- -2-.

– Release and unplug connector at centre loudspeaker - R208- -2-.

– Remove centre loudspeaker - R208- -2- from dash panel.

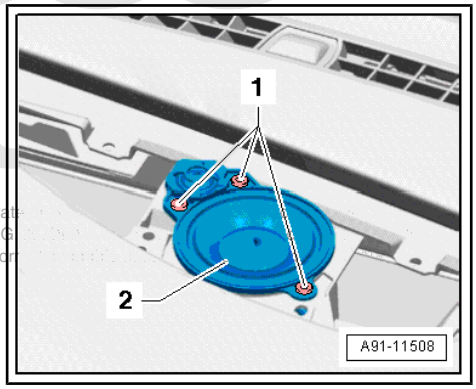

Installing

– Install in reverse sequence of removal.

Protected by copyright. Copying for privat
permitted unless authorised by AUDI AG
with respect to the correctness of infor

Tightening torques

♦ ⇒ "2.2.1 Overview of fitting locations - sound system, loudspeakers (Standard/BOSE)", page 44

♦ ⇒ "2.2.2 Overview of fitting locations - sound system, loudspeakers (Bang & Olufsen)", page 46

2.14.2 Removing and installing centre loudspeaker 2 - R219- (Bang & Olufsen)

The centre loudspeaker 2 - R219- -2- is located in the dash panel (front centre).

On vehicles with Bang & Olufsen sound system, centre loudspeaker - R208- and centre loudspeaker 2 - R219- are fitted in one housing.

The procedure for removing and installing is the same as for the centre loudspeaker - R208- ⇒ page 73 .

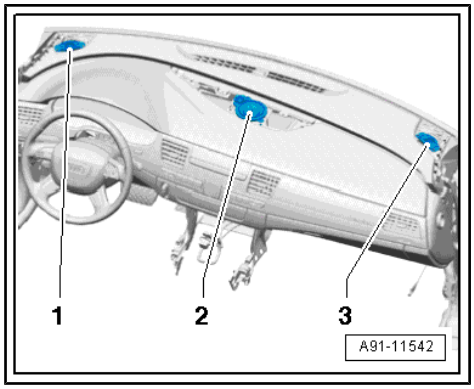

2.15 Removing and installing ANC microphones -R142- / -R143- / -R144- / -R145-

The ANC microphones are located in the moulded headliner.

ANC microphone overview.

– Switch off ignition and all electrical equipment and remove ignition key.

Removing

To remove ANC microphones, moulded headliner must be lowered on appropriate side.

– Lower moulded headliner ⇒ General body repairs, interior; Rep. gr. 70 ; Roof trim panels; Exploded view - moulded headliner .

– Unplug connector -2- on appropriate microphone.

– Pry microphone -1- out of retainer and remove from moulded headliner -3-.

Cover -4- remains in moulded headliner.

Installing

– Install in reverse sequence of removal.

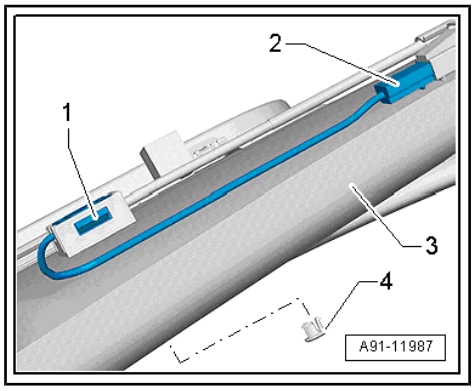

Protected by copyright. Copying for private or commercial purposes, in part or in whole, is not permitted unless authorised by AUDI AG. AUDI AG does not guarantee or accept any liability with respect to the correctness of information in this document. Copyright by AUDI AG.

2.16 Pin assignment

⇒ "2.16.1 Pin assignment for digital sound package control unit J525 (BOSE)", page 75

⇒ "2.16.2 Pin assignment for digital sound package control unit J525 (Bang & Olufsen)", page 77

⇒ "2.16.3 Pin assignment for digital sound package control unit 2 J787 (Bang & Olufsen)", page 79

2.16.1 Pin assignment for digital sound package control unit - J525- (BOSE)

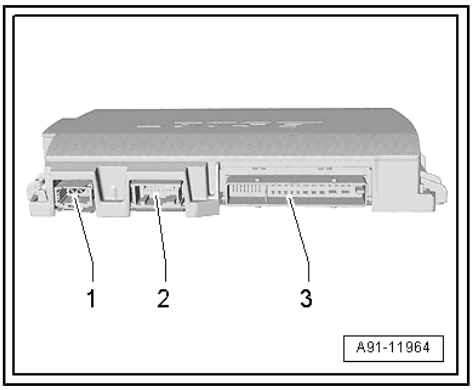

Digital sound package control unit - J525-

1 - MOST bus

2 - 18-pin connector - T18-

3 - 38-pin connector - T38-

Note

Contacts which are not listed are not used.

1 - MOST bus

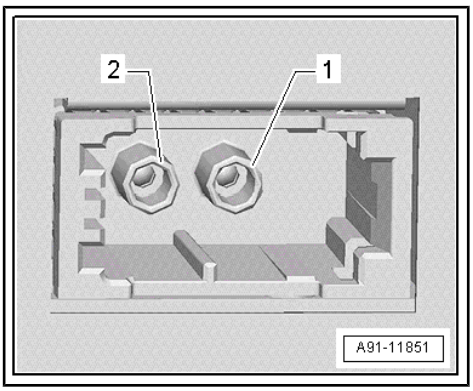

1 - Input

2 - Output

2- 18-pin connector - T18-

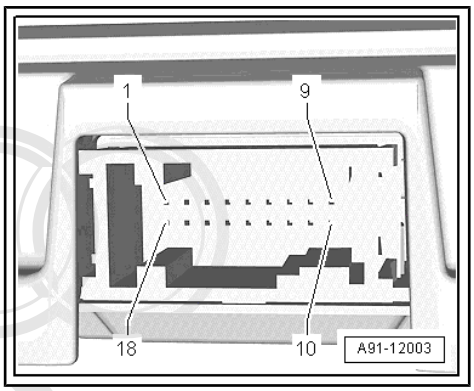

6 - Rear left microphone - R144- (+)

7 - Rear left microphone - R144- (-)

8 - Rear right microphone - R145- (+)

9 - Rear right microphone - R145- (-)

10 - Engine speed signal from engine control unit - J623- (+)

11 - Engine speed signal from engine control unit - J623- (-)

13 - Centre right microphone - R143- (+)

14 - Centre right microphone - R143- (-)

16 - Centre left microphone - R142- (+)

17 - Centre left microphone - R142- (-)

Protected by copyright. Copying for private or commercial purposes, in part or in whole, is not permitted unless authorised by AUDI AG. AUDI AG does not guarantee or accept any liability with respect to the correctness of information in this document. Copyright by AUDI AG.

3 - 38-pin connector - T38-

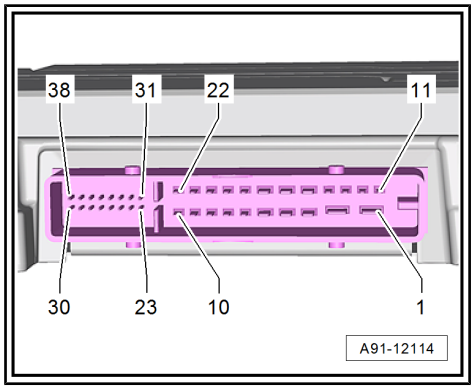

1 - Terminal 30

2 - Terminal 31

3 - Loudspeaker (+), rear right

4 - Front left bass loudspeaker - R21- (+)

5 - Subwoofer - R211- (–)

7 - Front left mid-range loudspeaker - R103- (–)

8 - Front right mid-range loudspeaker - R104- (+)

9 - Front right treble loudspeaker - R22- (–)

10 - Front left treble loudspeaker - R20- (+)

11 - Front right bass loudspeaker - R23- (–)

12 - Front right bass loudspeaker - R23- (+)

13 - Loudspeaker (+), rear left

14 - Loudspeaker (–), rear left

15 - Loudspeaker (–), rear right

16 - Front left bass loudspeaker - R21- (–)

17 - Subwoofer - R211- (+)

19 - Front left mid-range loudspeaker - R103- (+)

20 - Front right mid-range loudspeaker - R104- (–)

21 - Front right treble loudspeaker - R22- (+)

22 - Front left treble loudspeaker - R20- (–)

25 - Open circuit diagnostic lead

28 - Screen earth from microphone unit in front roof module - R164- (internal microphone - R74-)

29 - Microphone unit in front roof module - R164- (internal microphone - R74-) (–)

30 - Microphone unit in front roof module - R164- (internal microphone - R74-) (+)

31 - Centre loudspeaker - R208- (+)

32 - Centre loudspeaker - R208- (–)

33 - Left effect loudspeaker - R209- (–)

34 - Left effect loudspeaker - R209- (+)

37 - Right effect loudspeaker - R210- (+)

38 - Right effect loudspeaker - R210- (–)

Protected by copyright. Copying for private or commercial purposes, in part or in whole, is not permitted unless authorised by AUDI AG. AUDI AG does not guarantee or accept any liability with respect to the correctness of information in this document. Copyright by AUDI AG.

2.16.2 Pin assignment for digital sound package control unit - J525- (Bang & Olufsen)

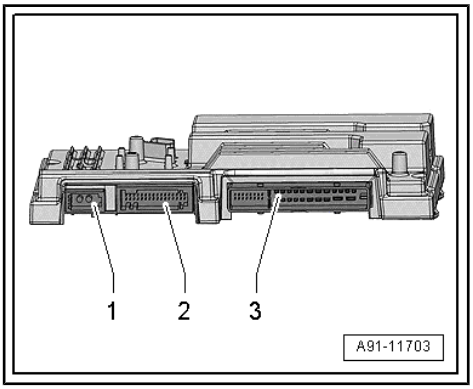

Digital sound package control unit - J525-

1 - MOST bus

2 - 32-pin connector - T32h-

3 - 38-pin connector - T38-

Note

Contacts which are not listed are not used.

1 - MOST bus

1 - Input

2 - Output

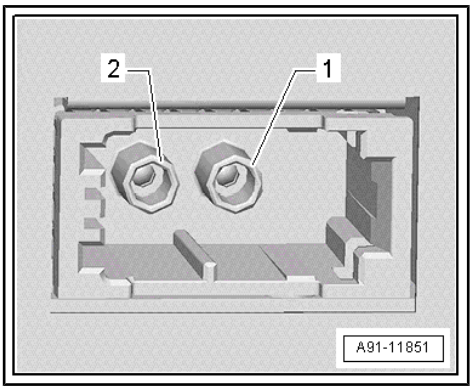

Protected by copyright. Copying for private or commercial purposes, in part or in whole, is not permitted unless authorised by AUDI AG. AUDI AG does not guarantee or accept any liability with respect to the correctness of information in this document. Copyright by AUDI AG.

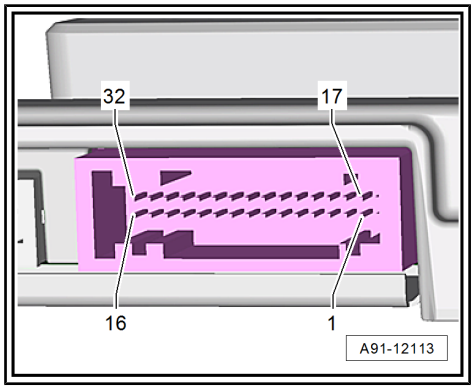

2 - 32-pin connector - T32h-

1 - Digital sound package control unit 2 - J787-
2 - Digital sound package control unit 2 - J787-
3 - Digital sound package control unit 2 - J787-
4 - Digital sound package control unit 2 - J787-
5 - Digital sound package control unit 2 - J787-
6 - Centre left microphone - R142- (+)
7 - Centre right microphone - R143- (+)
8 - Rear left microphone - R144- (+)
9 - Microphone unit in front roof module - R164- (internal microphone - R74-) (+)
10 - Rear right microphone - R145- (+)
11 - Screen earth
12 - Engine speed signal from engine control unit - J623- (+)
13 - Not used
14 - Digital sound package control unit 2 - J787-
15 - Not used
16 - Digital sound package control unit 2 - J787-
17 - Digital sound package control unit 2 - J787-
18 - Digital sound package control unit 2 - J787-
19 - Digital sound package control unit 2 - J787-
20 - Digital sound package control unit 2 - J787-
21 - Digital sound package control unit 2 - J787-
22 - Centre left microphone - R142- (-)
23 - Centre right microphone - R143- (-)
24 - Rear left microphone - R144- (-)
25 - Microphone unit in front roof module - R164- (internal microphone - R74-) (–)
26 - Rear right microphone - R145- (-)
27 - Not used
28 - Engine speed signal from engine control unit - J623- (-)
29 - Open circuit diagnostic lead
30 - Digital sound package control unit 2 - J787-
31 - Not used
32 - Digital sound package control unit 2 - J787-

Protected by copyright. Copying for private or commercial purposes, in part or in whole, is not permitted unless authorised by AUDI AG. AUDI AG does not guarantee or accept any liability with respect to the correctness of information in this document. Copyright by AUDI AG.

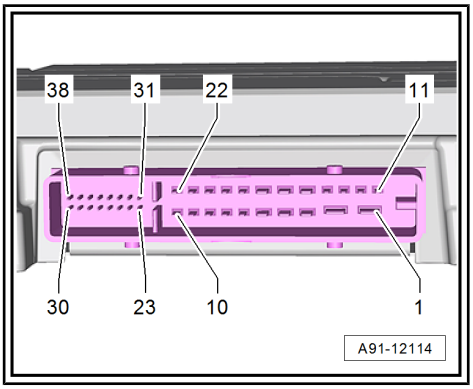

3 - 38-pin connector - T38-

1 - Terminal 30

2 - Terminal 31

3 - Front left mid-range loudspeaker - R103- (+)

4 - Front right mid-range loudspeaker - R104- (+)

5 - Rear left mid-range loudspeaker - R105- (+)

6 - Rear right mid-range loudspeaker - R106- (+)

7 - Centre loudspeaker - R208- (+)

8 - Centre loudspeaker 2 - R219- (+)

9 - Rear left treble loudspeaker 2 - R217- (+)

10 - Rear right treble loudspeaker 2 - R218- (+)

15 - Front left mid-range loudspeaker - R103- (–)

16 - Front right mid-range loudspeaker - R104- (–)

17 - Rear left mid-range loudspeaker - R105- (–)

18 - Rear right mid-range loudspeaker - R106- (–)

19 - Centre loudspeaker - R208- (–)

20 - Centre loudspeaker 2 - R219- (–)

21 - Rear left treble loudspeaker 2 - R217- (–)

22 - Rear right treble loudspeaker 2 - R218- (–)

23 - Front left treble loudspeaker - R20- (+)

24 - Front right treble loudspeaker - R22- (+)

25 - Rear left treble loudspeaker - R14- (+)

26 - Rear right treble loudspeaker - R16- (+)

27 - Left effect loudspeaker - R209- (+)

28 - Right effect loudspeaker - R210- (+)

31 - Front left treble loudspeaker - R20- (–)

32 - Front right treble loudspeaker - R22- (–)

33 - Rear left treble loudspeaker - R14- (–)

34 - Rear right treble loudspeaker - R16- (–)

35 - Left effect loudspeaker - R209- (–)

36 - Right effect loudspeaker - R210- (–)

Protected by copyright. Copying for private or commercial purposes, in part or in whole, is not permitted unless authorised by AUDI AG. AUDI AG does not guarantee or accept any liability with respect to the correctness of information in this document. Copyright by AUDI AG.

2.16.3 Pin assignment for digital sound package control unit 2 - J787- (Bang & Olufsen)

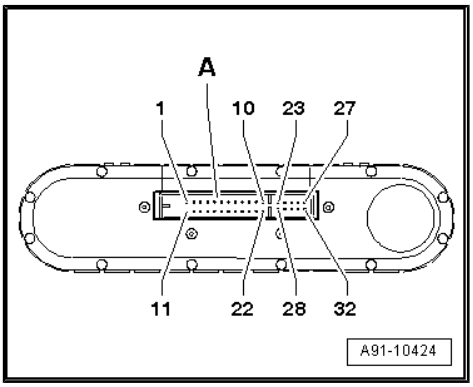

Digital sound package control unit 2 - J787-

A - 32-pin connector - T32g-

Note

Contacts which are not listed are not used.

A - 32-pin connector - T32g-

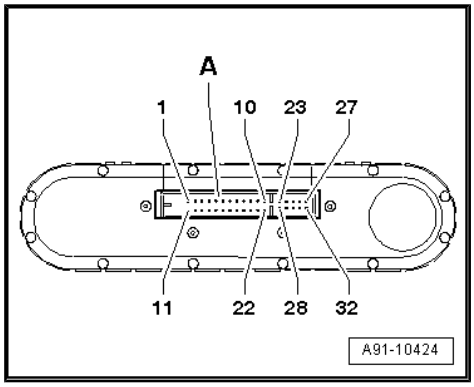

1 - Terminal 30
2 - Terminal 31
3 - Front right bass loudspeaker - R23- (+)
4 - Front right bass loudspeaker - R23- (–)
5 - Front left bass loudspeaker - R21- (+)
6 - Control motor for front left treble speaker - V344- (–)
7 - Control motor for front left treble speaker - V344-
8 - Digital sound package control unit - J525-
9 - Digital sound package control unit - J525-
10 - Digital sound package control unit - J525-
11 - Digital sound package control unit - J525-
12 - Digital sound package control unit - J525-
13 - Digital sound package control unit - J525-
14 - Digital sound package control unit - J525-
15 - Subwoofer - R211- (+)
16 - Subwoofer - R211- (–)
17 - Front left bass loudspeaker - R21- (–)
18 - Control motor for front left treble speaker - V344- (+)
19 - Control motor for front right treble loudspeaker - V345-
20 - Digital sound package control unit - J525-
21 - Control motor for front right treble speaker - V345- (+)
22 - Control motor for front right treble speaker - V345- (–)
23 - Digital sound package control unit - J525-
24 - Digital sound package control unit - J525-
25 - Digital sound package control unit - J525-
26 - Digital sound package control unit - J525-
27 - Digital sound package control unit - J525-
28 - Rear right bass loudspeaker - R17- (+)
29 - Rear right bass loudspeaker - R17- (–)
30 - Digital sound package control unit - J525-
31 - Rear left bass loudspeaker - R15- (+)
32 - Rear left bass loudspeaker - R15- (–)

Protected by copyright. Copying for private or commercial purposes, in part or in whole, is not permitted unless authorised by AUDI AG. AUDI AG does not guarantee or accept any liability with respect to the correctness of information in this document. Copyright by AUDI AG.

3 Aerial systems

⇒ “3.1 Layout - aerial systems”, page 81

⇒ “3.2 Overview of fitting locations - aerial systems”, page 81

⇒ “3.3 Removing and installing aerial amplifiers”, page 83

⇒ “3.4 Removing and installing traffic data aerial”, page 86

⇒ “3.5 Removing and installing roof aerial”, page 87

⇒ “3.6 Pin assignment for aerial amplifier”, page 88

3.1 Layout - aerial systems

The aerial system consists of the rear window aerials and the roof aerial - R216- .

Protected by copyright. Copying for private or commercial purposes, in part or in whole, is not permitted unless authorised by AUDI AG. AUDI AG does not guarantee or accept any liability with respect to the correctness of information in this document. Copyright by AUDI AG.

The following aerials are fitted in the roof aerial - R216- :

- GPS aerial - R50-
- Telephone aerial - R65-
- Auxiliary heater aerial - R182- (Europe only)
- Satellite aerial - R170- (USA only)

Window aerials

- Radio aerial 2 - R93- (AM/FM1)/ central locking and anti-theft alarm system aerial - R47- (FZV, remote locking) to aerial amplifier - R24- at D-pillar (top right)
- Aerial - R11- (FM2)/ TV aerial 2 - R56- (TV2) to aerial amplifier 2 - R111- at D-pillar (bottom right)
- Digital radio aerial - R183- (DAB)/ TV aerial 1 - R55- (TV1) to aerial amplifier 3 - R112- at D-pillar (top left)
- TV aerial 3 - R57- (TV3) to aerial amplifier 4 - R113- at D-pillar (bottom left)

Aerial amplifier 3 - R112- with DAB connection applies for European versions only.

Repairing aerial wiring ⇒ Electrical system; Rep. gr. 97 ; Repairing aerial wires .

3.2 Overview of fitting locations - aerial systems

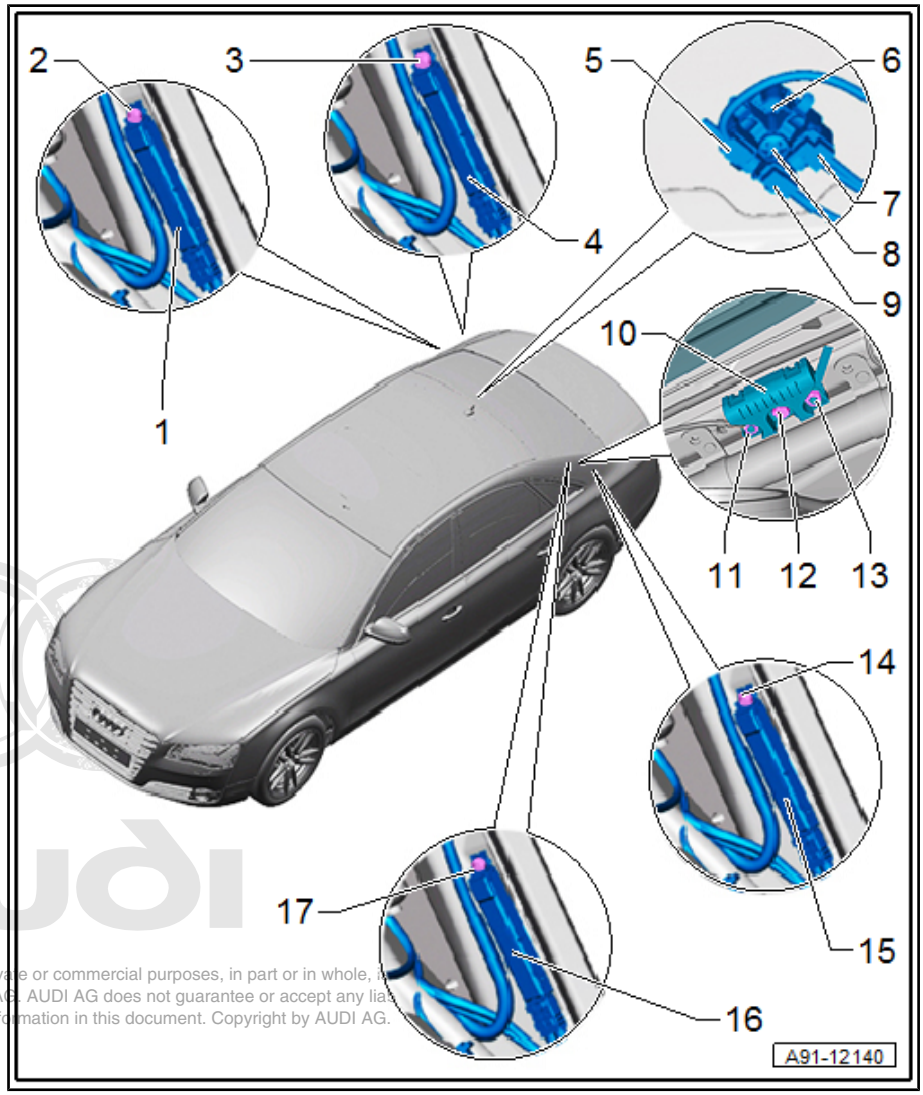

1 - Aerial amplifier - R24-

- ❑ Pin assignment ⇒ page 88
- ❑ Removing and installing ⇒ page 83

2 - Bolt

- ❑ 2 Nm

3 - Bolt

- ❑ 2 Nm

4 - Aerial amplifier 2 - R111-

- ❑ Pin assignment ⇒ page 88
- ❑ Removing and installing ⇒ page 83

5 - RC connection from auxiliary heater aerial - R182- , Europe only

- SAT connection from satellite aerial - R170- , USA only

6 - Roof aerial - R216-

- ❑ Removing and installing ⇒ page 87

7 - GPS connection from GPS aerial - R50-

8 - Bolt

- ❑ 6 Nm

9 - GSM connection from telephone aerial - R65-

Reproduction for private or commercial purposes, in part or in whole, is not permitted unless authorised by AUDI AG. AUDI AG does not guarantee or accept any liability with respect to the correctness of information in this document. Copyright by AUDI AG.

10 - Window aerial suppression filter - C18-

- ❑ Removing and installing ⇒ page 83

11 - Nut

- ❑ 9 Nm

12 - Bolt

- ❑ 9 Nm

13 - Nut

- ❑ 9 Nm

14 - Bolt

- ❑ 2 Nm

15 - Aerial amplifier 4 - R113-

- ❑ Pin assignment ⇒ page 89
- ❑ Removing and installing ⇒ page 83

16 - Aerial amplifier 3 - R112-

- ❑ Pin assignment ⇒ page 89
- ❑ Removing and installing ⇒ page 83

17 - Bolt

- ❑ 2 Nm

3.3 Removing and installing aerial amplifiers

⇒ “3.3.1 Removing and installing aerial amplifiers”, page 83

⇒ “3.3.2 Removing and installing window aerial suppression filter C18 ”, page 83

⇒ “3.3.3 Removing and installing remote control receiver for auxiliary heater R64 , up to model year 2013, including vehicles with high-voltage electrical system”, page 84

⇒ “3.3.4 Removing and installing remote control receiver for auxiliary heater R64 , from model year 2014, excluding vehicles with high-voltage electrical system”, page 85

3.3.1 Removing and installing aerial amplifiers

The aerial amplifier - R24- / aerial amplifier 2 - R111- / aerial amplifier 3 - R112- and aerial amplifier 4 - R113- are located at the D-pillars (left and right).

The removal and installation procedure is similar for all components.

– Switch off ignition and all electrical equipment and remove ignition key.

Removing

– Remove D-pillar trim ⇒ General body repairs, interior; Rep. gr. 70 ; Passenger compartment trim panels; Exploded view - D-pillar trim .

– Release and unplug connectors -2- and -4- at aerial amplifier - R24- -3-.

– Unscrew bolt -1- and remove aerial amplifier - R24- -3- from D-pillar.

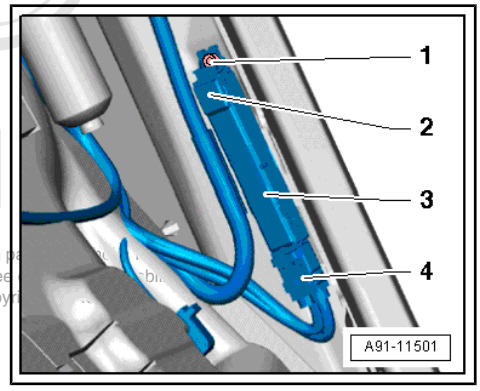

Installing

– Install in reverse sequence of removal.

Tightening torques

Protected by copyright. Copying for private or commercial purposes, in part or in whole, is not permitted unless authorised by AUDI AG. AUDI AG does not guarantee the accuracy, completeness or timeliness of the information in this document. Copyright by AUDI AG.

◆ ⇒ “3.2 Overview of fitting locations - aerial systems”, page 81

3.3.2 Removing and installing window aerial suppression filter - C18-

Window aerial suppression filter - C18- is located behind D-pillar trim (left-side).

– Switch off ignition and all electrical equipment and remove ignition key.

Removing

– Remove D-pillar trim (left-side) ⇒ General body repairs, interior; Rep. gr. 70 ; Passenger compartment trim panels; Exploded view - D-pillar trim .

– Unscrew nuts -2- and -4- on window aerial suppression filter - C18- -1-.

– Disconnect wires on window aerial suppression filter - C18- -1- from mounting studs.

– Unscrew bolt -3- and remove window aerial suppression filter - C18- -1- from D-pillar.

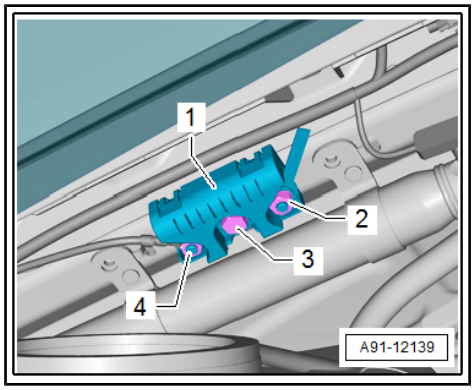

Installing

– Install in reverse sequence of removal.

Tightening torques

◆ ⇒ “3.2 Overview of fitting locations - aerial systems”, page 81

3.3.3 Removing and installing remote control receiver for auxiliary heater - R64- , up to model year 2013, including vehicles with high-voltage electrical system

The remote control receiver for auxiliary heater - R64- -1- is located in the luggage compartment on the back panel (left-side).

– Switch off ignition and all electrical equipment and remove ignition key.

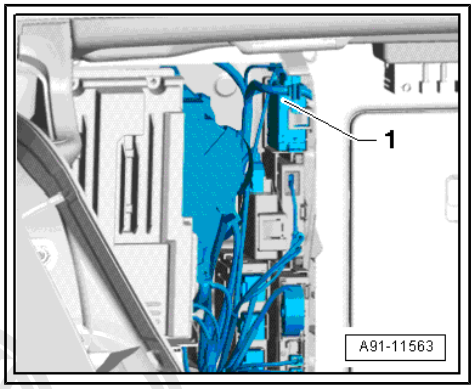

Removing

– Remove luggage compartment back panel trim ⇒ General body repairs, interior; Rep. gr. 70 ; Luggage compartment trim panels; Exploded view - luggage compartment side trim .

– Release and unplug connectors at remote control receiver for auxiliary heater - R64- -1-.

– Press lug -arrow- upwards and take remote control receiver for auxiliary heater - R64- -1- out of bracket.

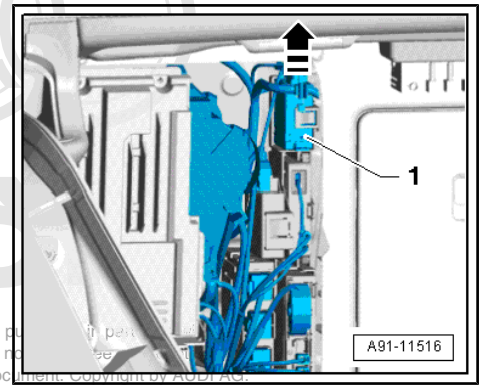

Installing

– Install in reverse sequence of removal.

Protected by copyright. Copying for private or commercial p
permitted unless authorised by AUDI AG. AUDI AG does n
with respect to the correctness of information in this doc

3.3.4 Removing and installing remote control receiver for auxiliary heater - R64- , from model year 2014, excluding vehicles with high-voltage electrical system

The remote control receiver for auxiliary heater - R64- -1- is located in the luggage compartment on the back panel (right-side).

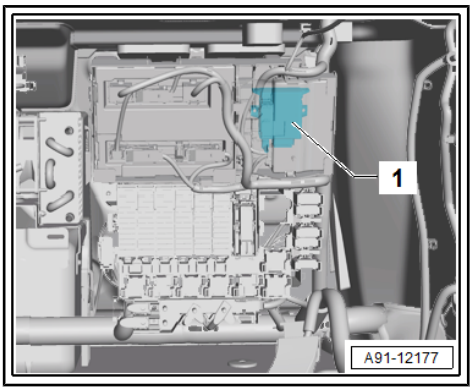

– Switch off ignition and all electrical equipment and remove ignition key.

Removing

– Remove luggage compartment back panel trim ⇒ General body repairs, interior; Rep. gr. 70 ; Luggage compartment trim panels; Exploded view - luggage compartment side trim .

Bracket with convenience system central control unit - J393- and data bus diagnostic interface - J533- must be removed first. Electrical connectors remain attached.

– Unclip convenience system central control unit - J393- -1- and data bus for diagnostic interface - J533- -2- from the bracket.

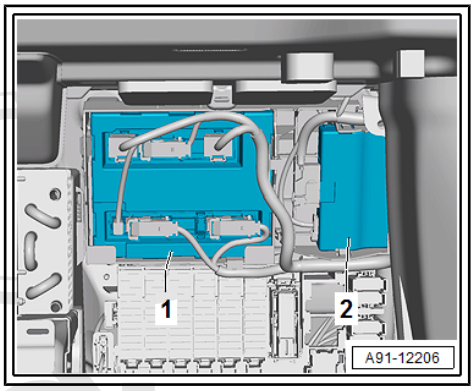

– Unscrew nuts -2-, swivel bracket -1- towards rear and pull up to remove.

Protected by copyright. Copying for private or comm
permitted unless authorised by AUDI AG. AUDI AG
with respect to the correctness of information in t

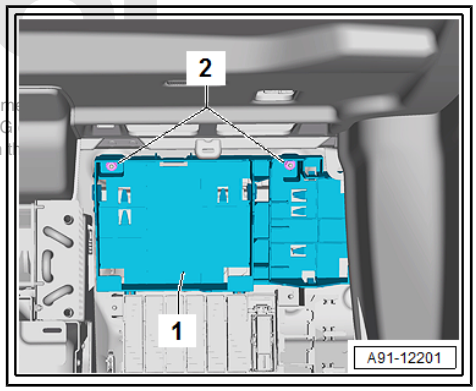

Then remove bracket with convenience system central control unit 2 - J773- and remote control receiver for auxiliary heater - R64- .

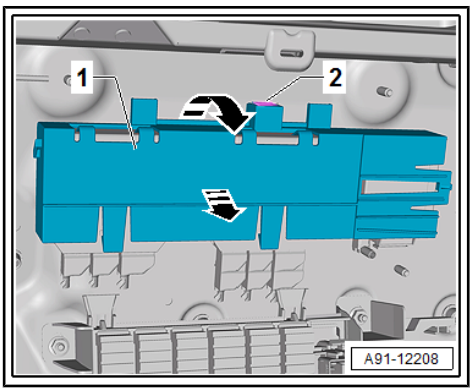

– Press lug -2-, push bracket -1- back -arrows- first and then remove from back panel.

– Press lug and pull remote control receiver for auxiliary heater - R64- -1- out of bracket -2- -arrow-.

– Release and unplug connectors at remote control receiver for auxiliary heater - R64- -1-.

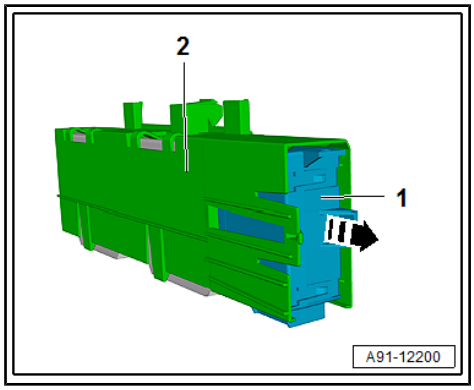

Installing

– Install in reverse sequence of removal.

Tightening torques

♦ ⇒ “6.2.2 Overview of fitting locations - telephone system, up to model year 2014, excluding vehicles with high-voltage electrical system”, page 106

3.4 Removing and installing traffic data aerial

The traffic data aerial - R173- is located on the windscreen (top left).

– Switch off ignition and all electrical equipment and remove ignition key.

Removing

The electrical connectors for the traffic data aerial - R173- are located behind the front interior light - W1- .

– Remove front interior light - W1- ⇒ Electrical system; Rep. gr. 96 ; Lights; Overview of fitting locations - lights in roof trim .

Connectors at front interior light - W1- -3- do not need to be detached.

– Release and unplug connectors -1- and -2-.

Removing traffic data aerial - R173- :

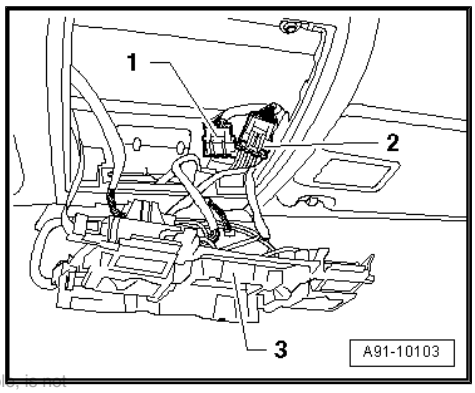

Protected by copyright. Copying for private or commercial purposes, in part or in whole, is not permitted unless authorised by AUDI AG. AUDI AG does not guarantee or accept any liability with respect to the correctness and completeness of the information contained in this document. Copyright by AUDI AG.

Traffic data aerial - R173- -2- is fixed in bracket -4- by a securing element -3-. Bracket -4- is bonded to windscreen -1-.

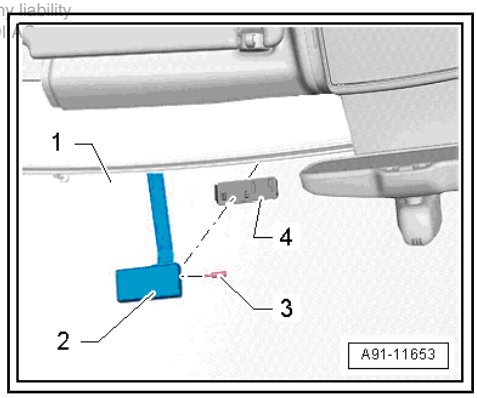

– Use small screwdriver to pull out locking element -3-.
– Pull traffic data aerial - R173- -2- out of bracket -4-.

Installing

– Install in reverse sequence of removal.

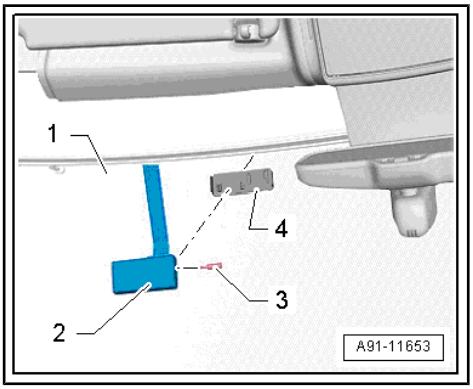

3.5 Removing and installing roof aerial

⇒ "3.5.1 Removing and installing roof aerial R216 ", page 87

3.5.1 Removing and installing roof aerial - R216-

The roof aerial - R216- has a maximum of four connections.

Aerial wires are plugged in directly at base of roof aerial - R216- .

To remove roof aerial - R216- , lower headliner at rear.

– Switch off ignition and all electrical equipment and remove ignition key.

Protected by copyright. Copying or distribution is not permitted without authorised by AUDI AG. AUDI AG does not guarantee or accept any liability with respect to the correctness of information in this document. Copyright by AUDI AG.

Removing

– Lower moulded headliner at rear ⇒ General body repairs, interior; Rep. gr. 70 ; Roof trim panels; Exploded view - moulded headliner .
– Release and unplug connectors -2-, -3- and -4- to aerial wires.
– Unscrew bolt -5- and detach retaining spring.
– Lift roof aerial - R216- off roof.

Installing

Roof aerial - R216- is delivered preassembled. Roof aerial - R216- , retaining clip and screw are fitted.

– Fit roof aerial - R216- onto roof and press on until it engages.
– Tighten pre-assembled bolt to specified torque.
– Install in reverse sequence of removal.

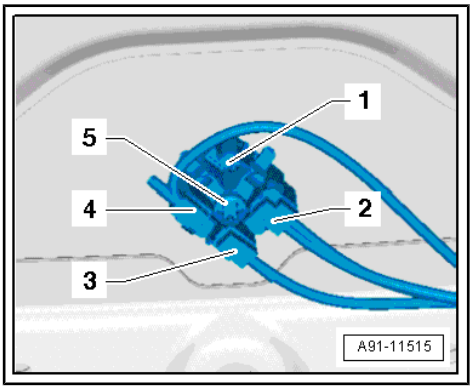

Tightening torques

♦ ⇒ "3.2 Overview of fitting locations - aerial systems", page 81

3.6 Pin assignment for aerial amplifier

Aerial amplifier - R24-

1 - Radio aerial 2 - R93- (AM/FM1)/ central locking and anti-theft alarm system aerial - R47- (FZV, remote locking)

2 - Connection AM/FM1, to radio - R-

3 - Connection FZV (remote locking), to convenience system central control unit - J393-

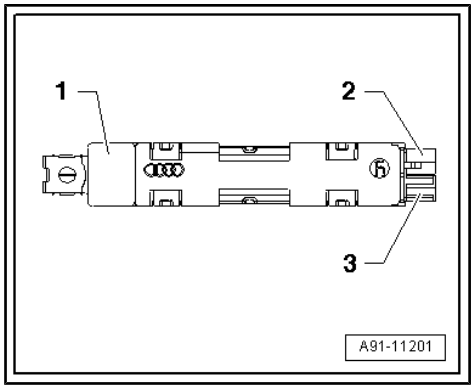

Window aerial connectors

1 - AM

2 - FM1/diagnosis

3 - FZV (remote locking)

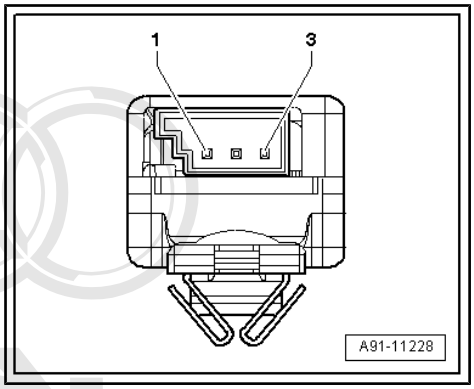

Aerial amplifier 2 - R111-

1 - Aerial - R11- (FM2)/ TV aerial 2 - R56- (TV2)

2 - Connection FM2, to radio - R-

3 - Connection TV2, to TV tuner - R78-

Protected by copyright. Copying for private or commercial purposes, in part or in whole, is not permitted unless authorised by AUDI AG. AUDI AG does not guarantee or accept any liability with respect to the correctness of information in this document. Copyright by AUDI AG.

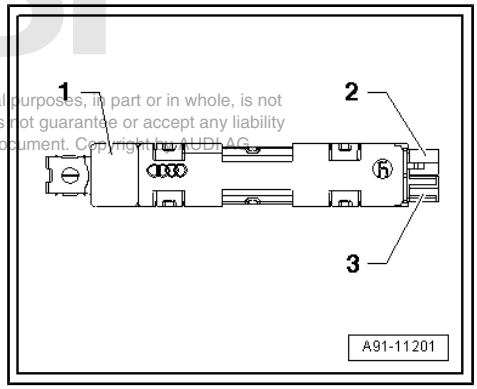

Window aerial connectors

1 - Not used

2 - FM2/TV2/diagnosis

3 - Not used

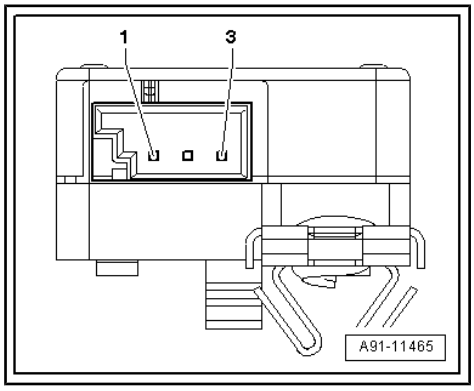

Aerial amplifier 3 - R112-

1 - Digital radio aerial - R183- (DAB)/ TV aerial 1 - R55- (TV1)

2 - Connection TV1, to TV tuner - R78-

3 - DAB connection, to radio - R-

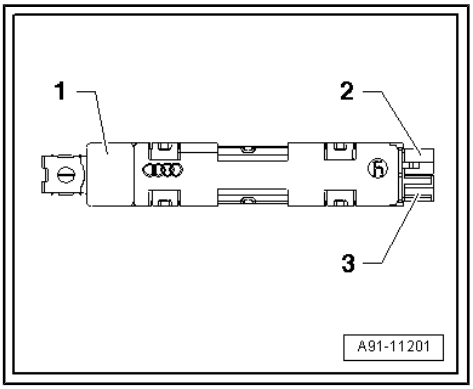

Window aerial connectors

1 - DAB

2 - TV1/diagnosis

3 - Not used

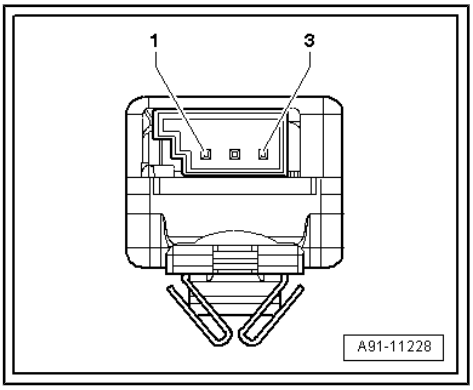

Aerial amplifier 4 - R113-

1 - TV aerial 3 - R57- , (TV3)

2 - Connection TV3, to TV tuner - R78-

3 - Not used

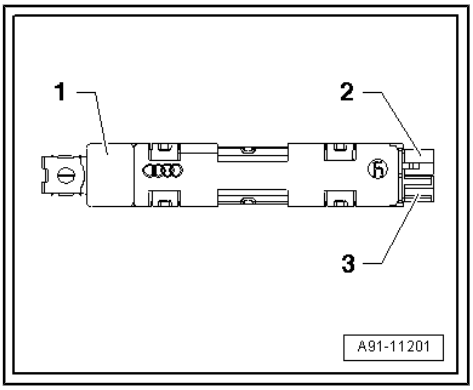

Window aerial connectors

1 - Not used

2 - TV3/diagnosis

3 - Not used

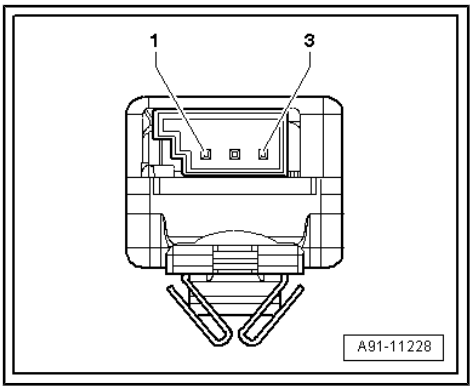

Protected by copyright. Copying for private or commercial purposes, in part or in whole, is not permitted unless authorised by AUDI AG. AUDI AG does not guarantee or accept any liability with respect to the correctness of information in this document. Copyright by AUDI AG.

4 Radio

⇒ “4.1 Removing and installing radio”, page 90

⇒ “4.2 Pin assignment”, page 94

4.1 Removing and installing radio

⇒ “4.1.1 Removing and installing radio R , up to model year 2013, including vehicles with high-voltage electrical system”, page 90

⇒ “4.1.2 Removing and installing radio R , from model year 2014, excluding vehicles with high-voltage electrical system”, page 92

4.1.1 Removing and installing radio - R- , up to model year 2013, including vehicles with high-voltage electrical system

The radio - R- -1- is located in the luggage compartment (right-side) on the back panel behind the convenience system central control unit - J393- -2-.

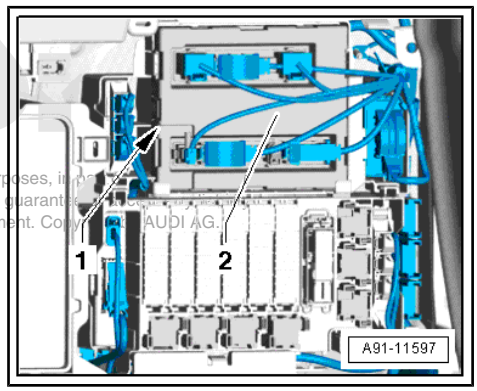

Protected by copyright. Copying for private or commercial purposes, in part is not permitted unless authorised by AUDI AG. AUDI AG does not guarantee or assume liability with respect to the correctness of information in this document. Copyright by AUDI AG.

Special tools and workshop equipment required

- Protective cap for cable connector - VAS 6223/9-

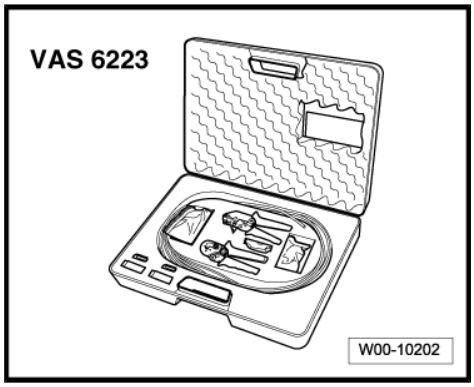

Note

If control unit is to be renewed, select the “Replace control unit” function for appropriate control unit in ⇒ Vehicle diagnostic tester.

– Switch off ignition and all electrical equipment and remove ignition key.

Removing

– Remove luggage compartment back panel trim ⇒ General body repairs, interior; Rep. gr. 70 ; Luggage compartment trim panels; Exploded view - luggage compartment side trim .

First remove bracket together with convenience system central control unit - J393- , convenience system central control unit 2 - J773- and control unit for headlight range control - J431- (E module, top).

– Release and unplug connectors on control units.

– Remove nuts -1- from bracket.

– Push lugs -arrows- upwards and pull out bracket with control units towards rear.

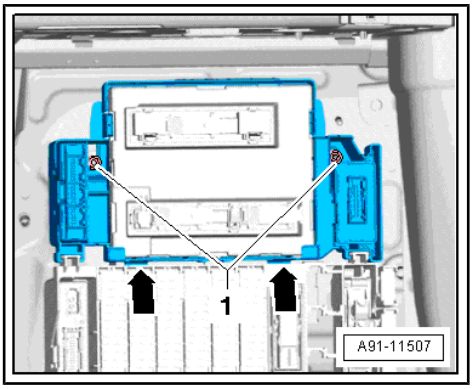

– Release and unplug connectors -2- and -4- at radio - R- -1-.

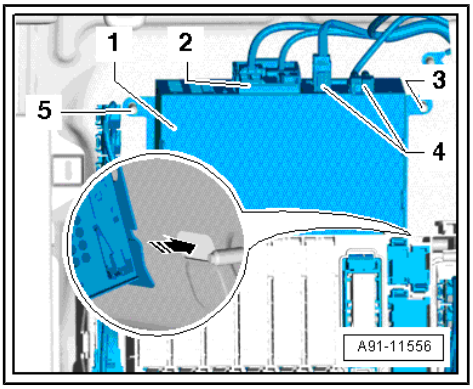

– Fit protective cap for cable connector - VAS 6223/9- -1- onto MOST bus connector -2-.

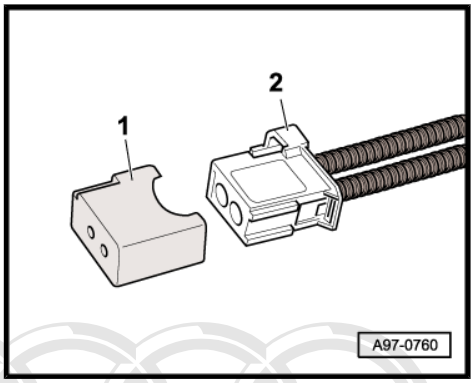

The radio - R- -1- is secured at the bottom by two tabs -arrow- in the back panel.

– Pull radio - R- -1- off studs -3- and -5-.

– Tilt radio - R- -1- from back panel towards rear and lift it out.

Installing

– Install in reverse sequence of removal.

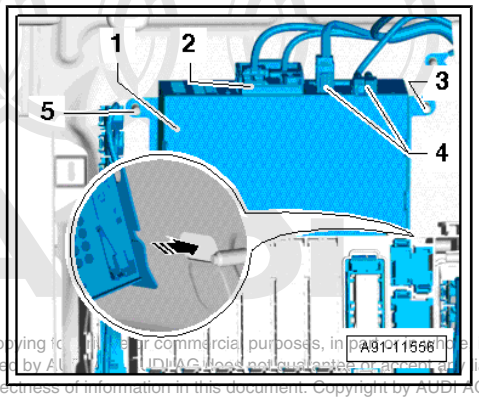

Protected by copyright. Copying for private or commercial purposes, in part or in whole, is not permitted unless authorised by AUDI AG. AUDI AG does not guarantee or accept any liability with respect to the correctness of information in this document. Copyright by AUDI AG.

– Ensure that tabs -arrow- are guided into slots of back panel.

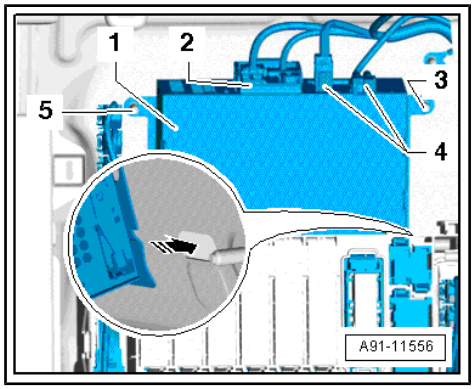

Tightening torques

- ⇒ “1.2.1 Overview of fitting locations - infotainment system, up to model year 2013, including vehicles with high-voltage electrical system”, page 7
- ⇒ “1.2.3 Overview of fitting locations - infotainment system, USA, up to model year 2013, including vehicles with high-voltage electrical system”, page 10
- ⇒ “1.2.5 Overview of fitting locations - infotainment system, Japan, up to model year 2013, including vehicles with high-voltage electrical system”, page 12

4.1.2 Removing and installing radio - R- , from model year 2014, excluding vehicles with high-voltage electrical system

Radio - R- -1- is located in recess of luggage compartment (left-side).

Item 2: Holder radio - R-

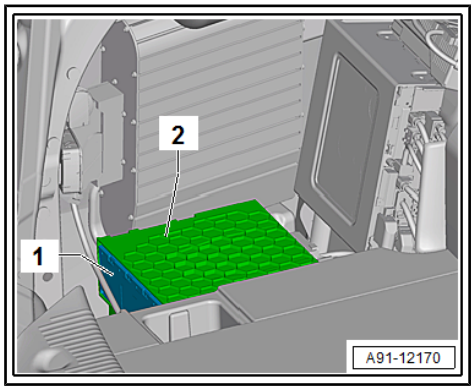

Special tools and workshop equipment required

- Protective cap for cable connector - VAS 6223/9-

Note

If control unit is to be renewed, select the “Replace control unit” function for appropriate control unit in ⇒ Vehicle diagnostic tester.

Protected by copyright. Copying for private or commercial purposes, in part or in whole, is not permitted unless authorised by AUDI AG. AUDI AG does not guarantee or accept any liability with respect to the correctness of information in this document. Copyright by AUDI AG.

– Switch off ignition and all electrical equipment and remove ignition key.

Removing

– Remove luggage compartment side trim (left-side) ⇒ General body repairs, interior; Rep. gr. 70 ; Luggage compartment trim panels; Overview of luggage compartment side trim .

Bracket radio - R- must first be removed.

– Release and unplug connectors at radio - R- -1-.

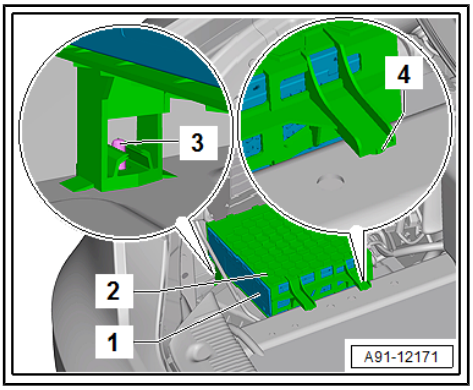

– Fit protective cap for cable connector - VAS 6223/9- -1- onto MOST bus connector -2-.

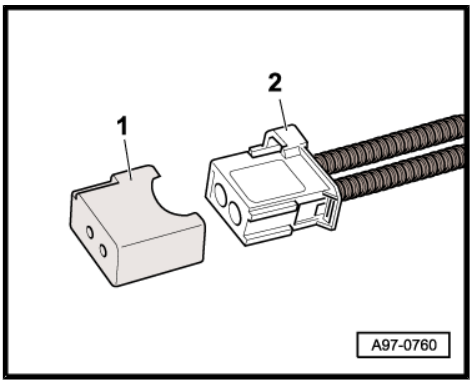

Two studs -3- secure bracket -2- to floor. On other side, bracket -2- is engaged in longitudinal member -4-.

– Remove bracket -2- from stud -3- and swivel upwards.

– Remove bracket -2- from mountings -4- on longitudinal member.

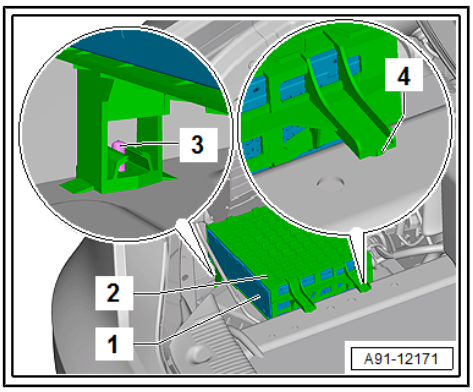

– Press left and right lugs -arrows- on radio - R- -1- and pull radio - R- -1- from bracket -2-.

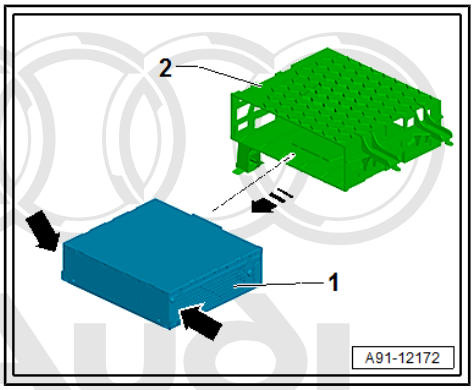

Installing

– Install in reverse sequence of removal.

Protected by copyright. Copying for private or commercial purposes, in part or in whole, is not permitted unless authorised by AUDI AG. AUDI AG does not guarantee or accept any liability with respect to the correctness of information in this document. Copyright by AUDI AG.

– Make sure lugs -4- are guided into openings on longitudinal member.

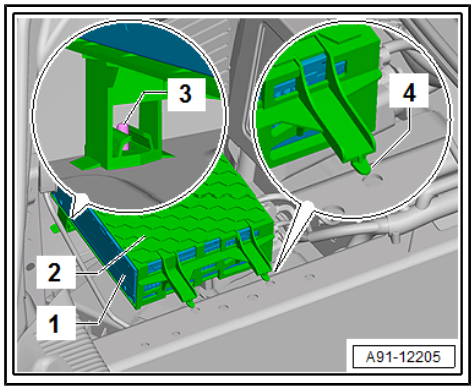

Tightening torques

- ⇒ “1.2.2 Overview of fitting locations - infotainment system, up to model year 2014, excluding vehicles with high-voltage electrical system”, page 9
- ⇒ “1.2.4 Overview of fitting locations - infotainment system, up to model year 2014, excluding vehicles with high-voltage electrical system”, page 11
- ⇒ “1.2.6 Overview of fitting locations - infotainment system, Japan, up to model year 2014, excluding vehicles with high-voltage electrical system”, page 13

4.2 Pin assignment

⇒ “4.2.1 Pin assignment for radio R ”, page 94

⇒ “4.2.2 Pin assignment for radio R , USA”, page 96

4.2.1 Pin assignment for radio - R-

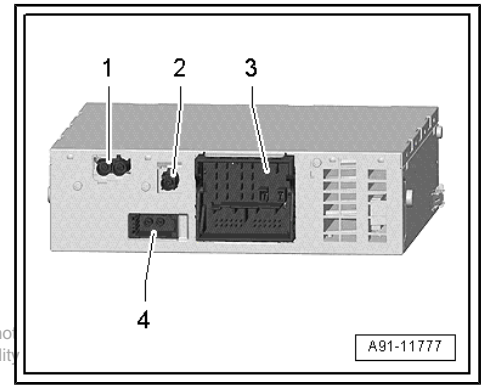

Radio - R-

1 - Aerial connection (AM/FM1/FM2)

2 - DAB connection, from aerial amplifier 3 - R112- (digital radio aerial - R183-), Europe only

3 - Connection block with four multi-pin connectors

4 - MOST bus

Protected by copyright. Copying for private or commercial purposes, in part or in whole, is not permitted unless authorised by AUDI AG. AUDI AG does not guarantee or accept any liability with respect to the correctness of information in this document. Copyright by AUDI AG.

Note

Contacts which are not listed are not used.

1 - Aerial connection (AM/FM1/FM2)

1 - Contact 2 (AM/FM1) from aerial amplifier - R24- (radio aerial 2 - R93-)

2 - Contact 1 (FM2) from aerial amplifier 2 - R111- (aerial - R11-)

3 - Connection block with four multi-pin connectors

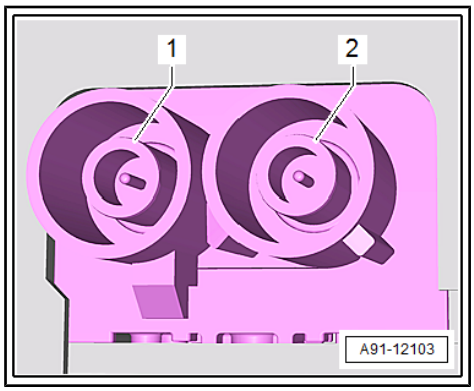

A - 8-pin connector - T8c-

1 - Loudspeaker (+), rear right
2 - Loudspeaker (+), front right
3 - Loudspeaker (+), front left
4 - Loudspeaker (+), rear left
5 - Loudspeaker (–), rear right
6 - Loudspeaker (–), front right
7 - Loudspeaker (–), front left
8 - Loudspeaker (–), rear left

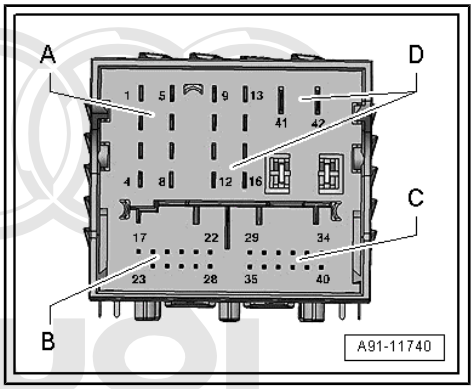

B - 12-pin connector - T12-

Protected by copyright. Copying for private or commercial purposes, in part or in whole, is not permitted unless authorised by AUDI AG. AUDI AG does not guarantee or accept any liability with respect to the correctness of information in this document. Copyright by AUDI AG.

17 - NF in, left-side (low frequency)
18 - NF in, earth (low frequency)
19 - NF in, diag (low frequency)
21 - NF diag (low frequency)
22 - NF (low frequency) (–)
23 - NF in, right-side (low frequency)
24 - NF in, screen earth (low frequency)
27 - NF screen earth (low frequency)
28 - NF (low frequency) (+)

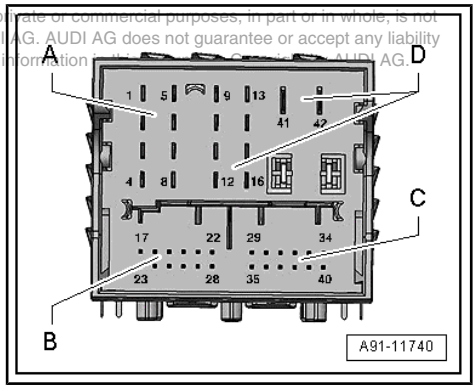

C - 12-pin connector - T12am-

All pins are connected to the multimedia system operating unit 2 - E499- (rear centre armrest).

29 - Headphones output 1 (diag)
31 - Headphones output 1/2 (diag)
34 - Headphones output 2 (diag)
35 - Headphones output 1 (left)
36 - Headphones output 1 (earth)
37 - Headphones output 1 (right)
38 - Headphones output 2 (left)
39 - Headphones output 2 (earth)
40 - Headphones output 2 (right)

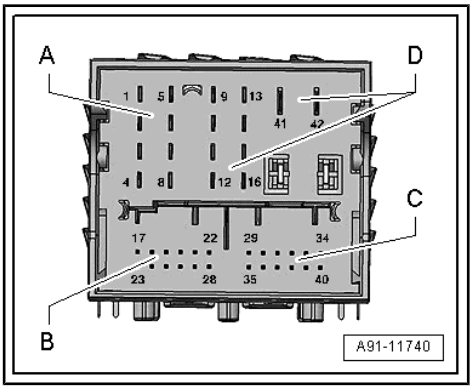

D - 10-pin connector - T10h-

9 - Subwoofer - R211-
10 - Centre loudspeaker - R208-
11 - Open circuit diagnostic lead
13 - Subwoofer - R211-
14 - Centre loudspeaker - R208-
41 - Terminal 31
42 - Terminal 30

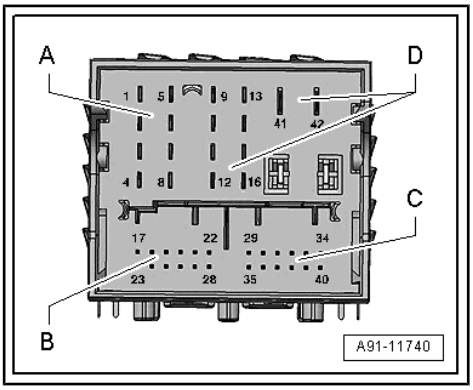

4 - MOST bus

1 - Input

2 - Output

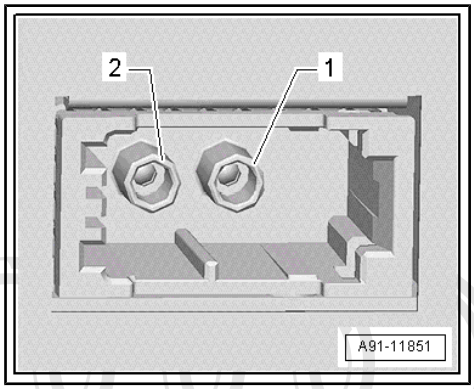

4.2.2 Pin assignment for radio - R- , USA

Radio - R-

1 - Aerial connection (AM/FM1/FM2)

2 - SAT connection, from roof aerial - R216- (satellite aerial - R170-)

3 - Connection block with four multi-pin connectors

4 - MOST bus

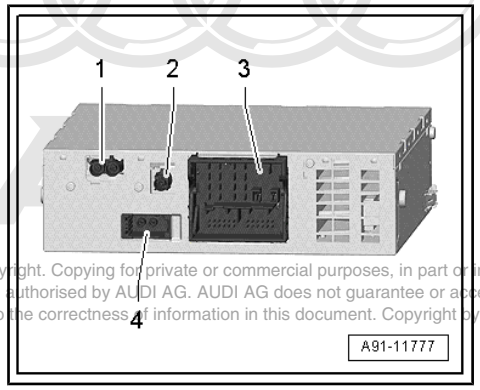

Protected by copyright. Copying for private or commercial purposes, in part or in whole, is not permitted unless authorised by AUDI AG. AUDI AG does not guarantee or accept any liability with respect to the correctness of information in this document. Copyright by AUDI AG.

Note

Contacts which are not listed are not used.

1 - Aerial connection (AM/FM1/FM2)

1 - Contact 2 (AM/FM1) from aerial amplifier - R24- (radio aerial 2 - R93-)

2 - Contact 1 (FM2) from aerial amplifier 2 - R111- (aerial - R11-)

3 - Connection block with four multi-pin connectors

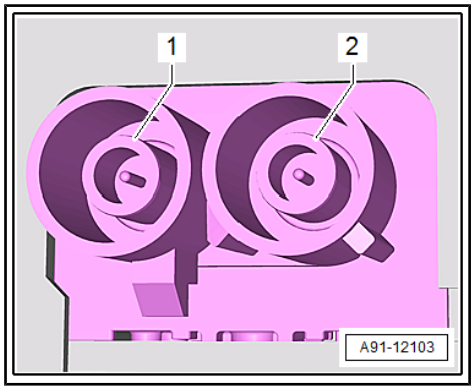

A - 8-pin connector - T8c-

1 - Loudspeaker (+), rear right

2 - Loudspeaker (+), front right

3 - Loudspeaker (+), front left

4 - Loudspeaker (+), rear left

5 - Loudspeaker (–), rear right

6 - Loudspeaker (–), front right

7 - Loudspeaker (–), front left

8 - Loudspeaker (–), rear left

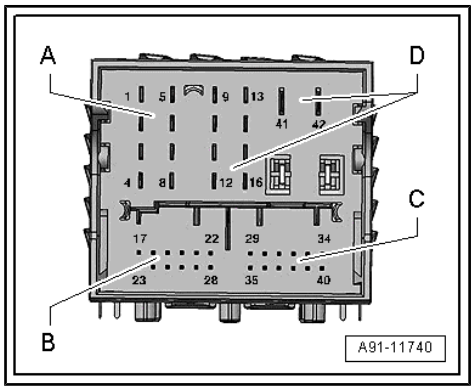

B - 12-pin connector - T12-

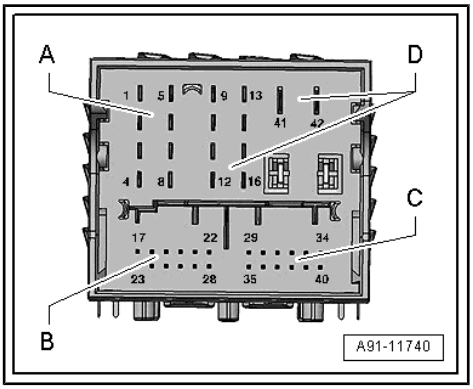

17 - NF in, left-side (low frequency)

18 - NF in, earth (low frequency)

19 - NF in, diag (low frequency)

21 - NF diag (low frequency)

22 - NF (low frequency) (–)

23 - NF in, right-side (low frequency)

24 - NF in, screen earth (low frequency)

27 - NF screen earth (low frequency)

28 - NF (low frequency) (+)

C - 12-pin connector - T12am-

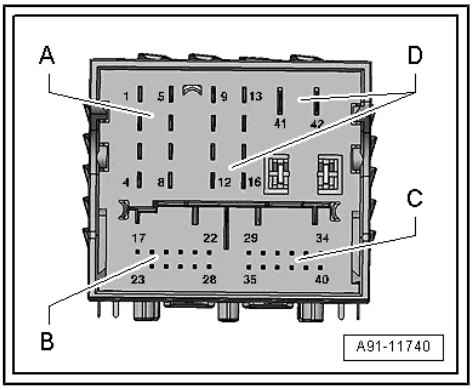

All pins are connected to the multimedia system operating unit 2 - E499- (rear centre armrest).

29 - Headphones output 1 (diag)

31 - Headphones output 1/2 (diag)

34 - Headphones output 2 (diag)

35 - Headphones output 1 (left)

36 - Headphones output 1 (earth)

37 - Headphones output 1 (right)

38 - Headphones output 2 (left)

39 - Headphones output 2 (earth)

40 - Headphones output 2 (right)

D - 10-pin connector - T10h-

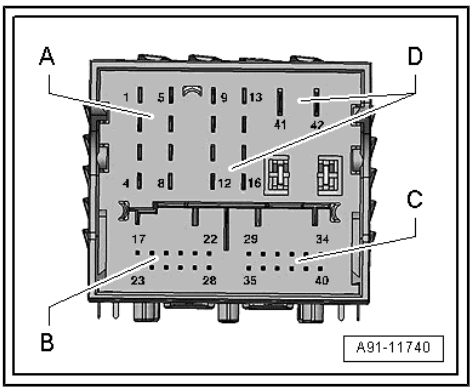

9 - Subwoofer - R211-

10 - Centre loudspeaker - R208-

11 - Open circuit diagnostic lead

13 - Subwoofer - R211-

14 - Centre loudspeaker - R208-

41 - Terminal 31

42 - Terminal 30

Protected by copyright. Copying for private or commercial purposes, in part or in whole, is not permitted unless authorised by AUDI AG. AUDI AG does not guarantee or accept any liability with respect to the correctness of information in this document. Copyright by AUDI AG.

4 - MOST bus

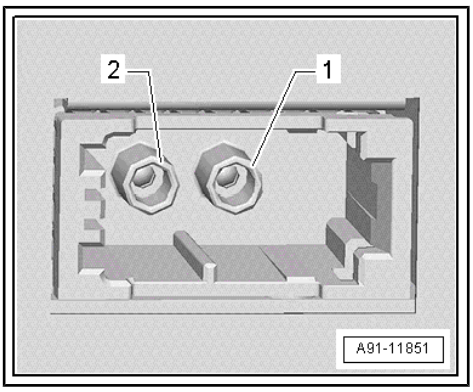

1 - Input

2 - Output

5 DVD/CD changer

⇒ “5.1 Pin assignment”, page 98

⇒ “5.2 Removing and installing DVD changer”, page 98

5.1 Pin assignment

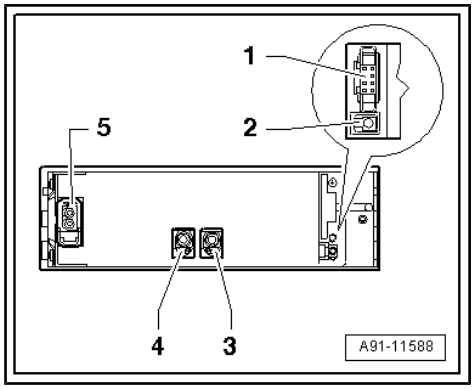

DVD changer - R161-

1 - 8-pin connector - T8e-

2 - FBAS input from TV tuner - R78-

3 - FBAS output to control unit 1 for information electronics - J794-

4 - FBAS output to control unit 2 for information electronics - J829-

5 - MOST bus

Note

Protected by copyright. Copying for private or commercial purposes, in part or in whole, is not permitted unless authorised by AUDI AG. AUDI AG does not guarantee or accept any liability with respect to the correctness of information in this document. Copyright by AUDI AG.

Contacts which are not listed are not used.

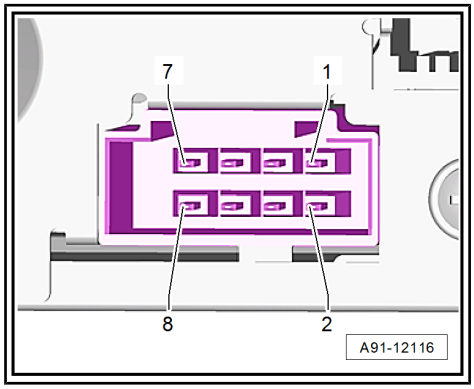

1 - 8-pin connector - T8e-

1 - Terminal 31

2 - Terminal 30

5 - Open circuit diagnostic lead

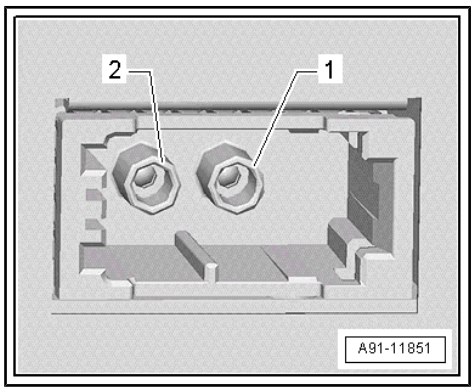

5 - MOST bus

1 - Input

2 - Output

5.2 Removing and installing DVD changer

The DVD changer - R161- is fitted in the glove box.

Special tools and workshop equipment required

Protected by copyright. Copying for private or commercial purposes, in part or in whole, is not permitted unless authorised by AUDI AG. AUDI AG does not guarantee or accept any liability with respect to the correctness of information in this document. Copyright by AUDI AG.

- Radio release tool - T10057-

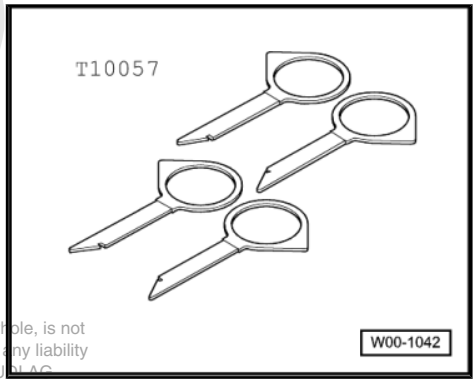

- Fibre-optic conductor repair set - VAS 6223-

- Protective cap for cable connector - VAS 6223/9-

Note

If control unit is to be renewed, select the "Replace control unit" function for appropriate control unit in ⇒ Vehicle diagnostic tester.

– Switch off ignition and all electrical equipment and remove ignition key.

Removing

– Open glove box.

– Take out any DVD that is still in DVD changer - R161- .

– Insert two radio release tools - T10057- into slots on DVD changer - R161- -1- until they engage. Pointed ends of grips must face outwards.

– Pull DVD changer - R161- out of mounting frame.

– Release and unplug connectors on DVD changer - R161- .

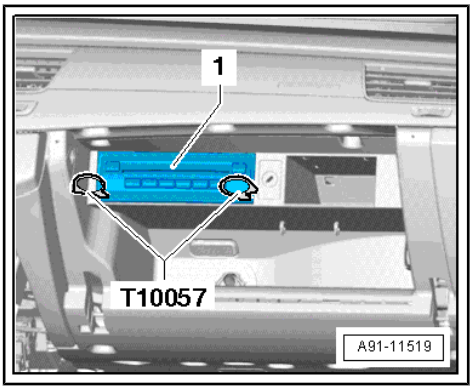

– Fit protective cap for cable connector - VAS 6223/9- -1- onto MOST bus connector -2-.
– Press release tabs on DVD changer - R161- and remove radio release tools - T10057- .

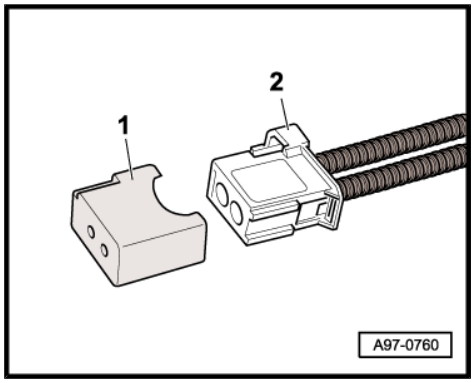

Installing

– Plug all connectors in.
– Slide DVD changer - R161- into mounting frame until it engages.

Protected by copyright. Copying for private or commercial purposes, in part or in whole, is not permitted unless authorised by AUDI AG. AUDI AG does not guarantee or accept any liability with respect to the correctness of information in this document. Copyright by AUDI AG.

6 Telephone system

⇒ “6.1 Layout - telephone”, page 101

⇒ “6.2 Overview of fitting locations - telephone system”, page 105

⇒ “6.3 Exploded view - microphone unit”, page 107

⇒ “6.4 Removing and installing microphone unit in front roof module R164 ”, page 108

⇒ “6.5 Removing and installing aerial amplifier for mobile telephone R86 ”, page 109

⇒ “6.6 Removing and installing telephone bracket R126 ”, page 110

⇒ “6.7 Pin assignment”, page 112

6.1 Layout - telephone

Protected by copyright. Copying for private or commercial purposes, in part or in whole, is not permitted unless authorised by AUDI AG. AUDI AG does not guarantee or accept any liability with respect to the correctness of information in this document. Copyright by AUDI AG.

The telephone system consists of the following versions:

- Mobile phone pre-installation in control unit 1 for information electronics - J794- (9ZF)

The telephone bracket - R126- is fitted in the centre console storage compartment. The system is operated using the MMI infotainment system or the mobile telephone - R54- .

Microphones for the microphone unit in front roof module - W1- are integrated in the front interior light - R164- . One of these microphones (front left microphone - R140-) is connected directly to the control unit 1 for information electronics - J794- .

The aerial connection is located at the telephone bracket - R126- .

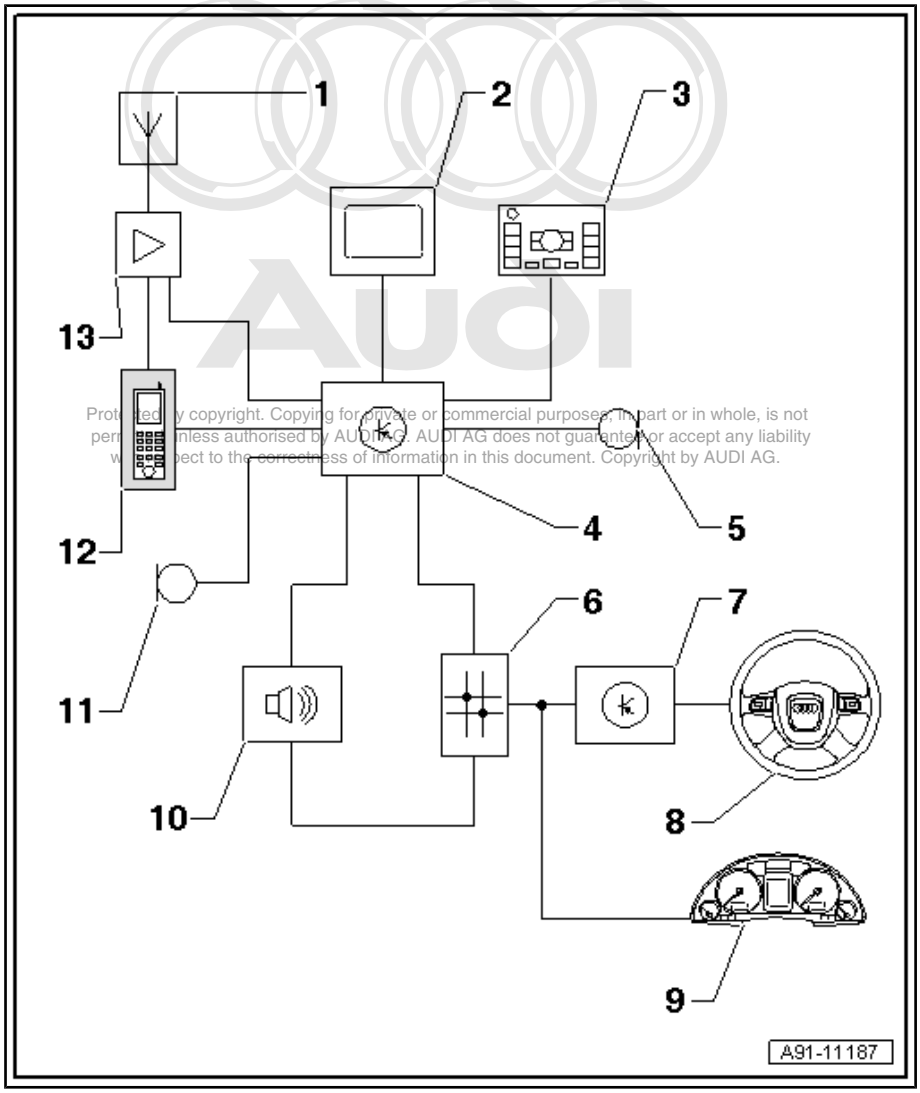

Protected by copyright. Copying for private or commercial purposes, in part or in whole, is not permitted unless authorised by AUDI AG. AUDI AG does not guarantee or accept any liability with respect to the correctness of information in this document. Copyright by AUDI AG.

1 - Roof aerial - R216-

2 - Display unit for front information display and operating unit control unit - J685- in dash panel (centre)

3 - Multimedia system operating unit - E380- in centre console (front)

4 - Control unit 1 for information electronics - J794- in dash panel

5 - Microphone unit in front roof module - R164- (front right microphone - R141-) in front interior light - W1-

6 - Data bus diagnostic interface - J533- in luggage compartment on back panel (right-side)

7 - Steering column electronics control unit - J527- on steering column on steering column switch

8 - Multi-function steering wheel

9 - Control unit in dash panel insert - J285- in dash panel

10 - Digital sound package control unit - J525- in luggage compartment on back panel (left-side)

11 - Microphone unit in front roof module - R164- (front left microphone - R140-) in front interior light - W1-

12 - Telephone bracket - R126- with mobile telephone - R54- in centre console storage compartment

13 - Aerial amplifier for mobile telephone - R86- in luggage compartment on back panel (left-side)

- Bluetooth car phone in control unit 1 for information electronics - J794- (9ZW)

The Bluetooth car phone has its own telephone handset - R37- / telephone handset 2 - R116- (Bluetooth handsets) equipped with SIM card slide-in module and charging cradle located in the centre console (front and rear).

The Bluetooth car phone supports the operation of Bluetooth mobile telephones - R54- . It is not necessary to fit the Bluetooth mobile telephones - R54- into a bracket and they do not have to be linked to the hands-free unit in the vehicle.

In this case, the Bluetooth link is the only means of connecting the mobile phone. It is also possible to read out the SIM card of the mobile telephone - R54- (telephone directory).

The Bluetooth car phone has its own telephone handset - R37- (Bluetooth handset) equipped with SIM card slide-in module and charging cradle.

The Bluetooth car phone and the mobile telephone - R54- are either operated via the telephone handset - R37- / telephone

handset 2 - R116- , the hands-free unit with multi-function steering wheel or via the speech dialogue system.

The aerial for Bluetooth - R152- is fitted in the control unit 1 for information electronics - J794- .

Microphones for the microphone unit in front roof module - W1- are integrated in the front interior light - R164- . One of these microphones (front left microphone - R140-) is connected directly to the control unit 1 for information electronics - J794- .

The aerial connection is located at the control unit 1 for information electronics - J794- .

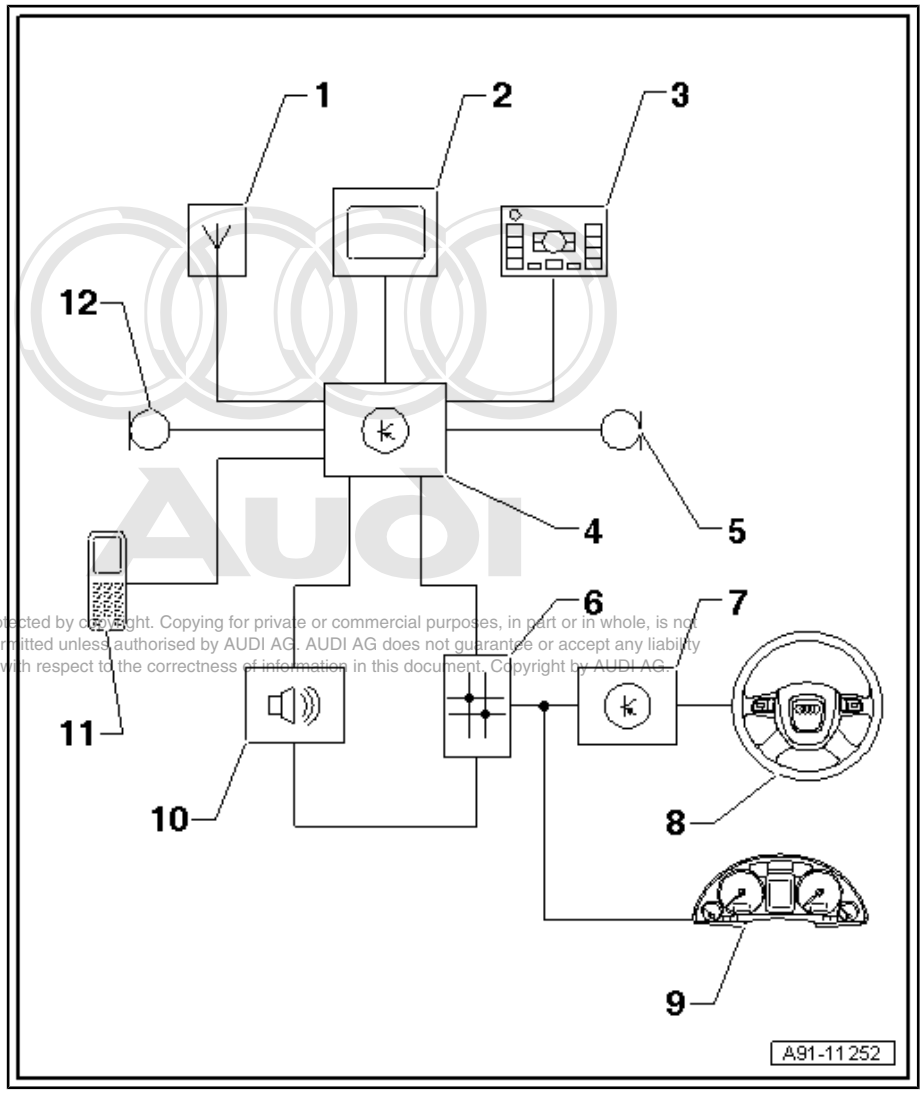

Protected by copyright. Copying for private or commercial purposes, in part or in whole, is not permitted unless authorised by AUDI AG. AUDI AG does not guarantee or accept any liability with respect to the correctness of information in this document. Copyright by AUDI AG.

1 - Roof aerial - R216-

2 - Display unit for front information display and operating unit control unit - J685- in dash panel (centre)

3 - Multimedia system operating unit - E380- in centre console (front)

4 - Control unit 1 for information electronics - J794- in dash panel

5 - Microphone unit in front roof module - R164- (front right microphone - R141-) in front interior light - W1-

6 - Data bus diagnostic interface - J533- in luggage compartment on back panel (right-side)

7 - Steering column electronics control unit - J527- on steering column on steering column switch

8 - Multi-function steering wheel

9 - Control unit in dash panel insert - J285- in dash panel

10 - Digital sound package control unit - J525- in luggage compartment on back panel (left-side)

11 - Telephone bracket - R126- with telephone handset - R37- in centre console storage compartment

- Rear charger unit for telephone - R151- with telephone handset 2 - R116- in rear centre armrest storage compartment

12 - Microphone unit in front roof module - R164- (front left microphone - R140-) in front interior light - W1-

♦ Bluetooth hands-free system in control unit 1 for information electronics - J794- (9ZX)

Control unit 1 for information electronics - J794- with microphone unit installed in front roof module - R164- was designed exclu-

sively as a hands-free system. The mobile telephone - R54- is connected via Bluetooth.

The aerial for Bluetooth - R152- is fitted in the control unit 1 for information electronics - J794- .

1 - Display unit for front information display and operating unit control unit - J685- in dash panel (centre)

2 - Multimedia system operating unit - E380- in centre console (front)

3 - Microphone unit in front roof module - R164- (front right microphone - R141-) in front interior light - W1-

4 - Control unit 1 for information electronics - J794- with aerial for Bluetooth - R152- in dash panel

5 - Data bus diagnostic interface - J533- in luggage compartment on back panel (right-side)

6 - Digital sound package control unit - J525- in luggage compartment on back panel (left-side)

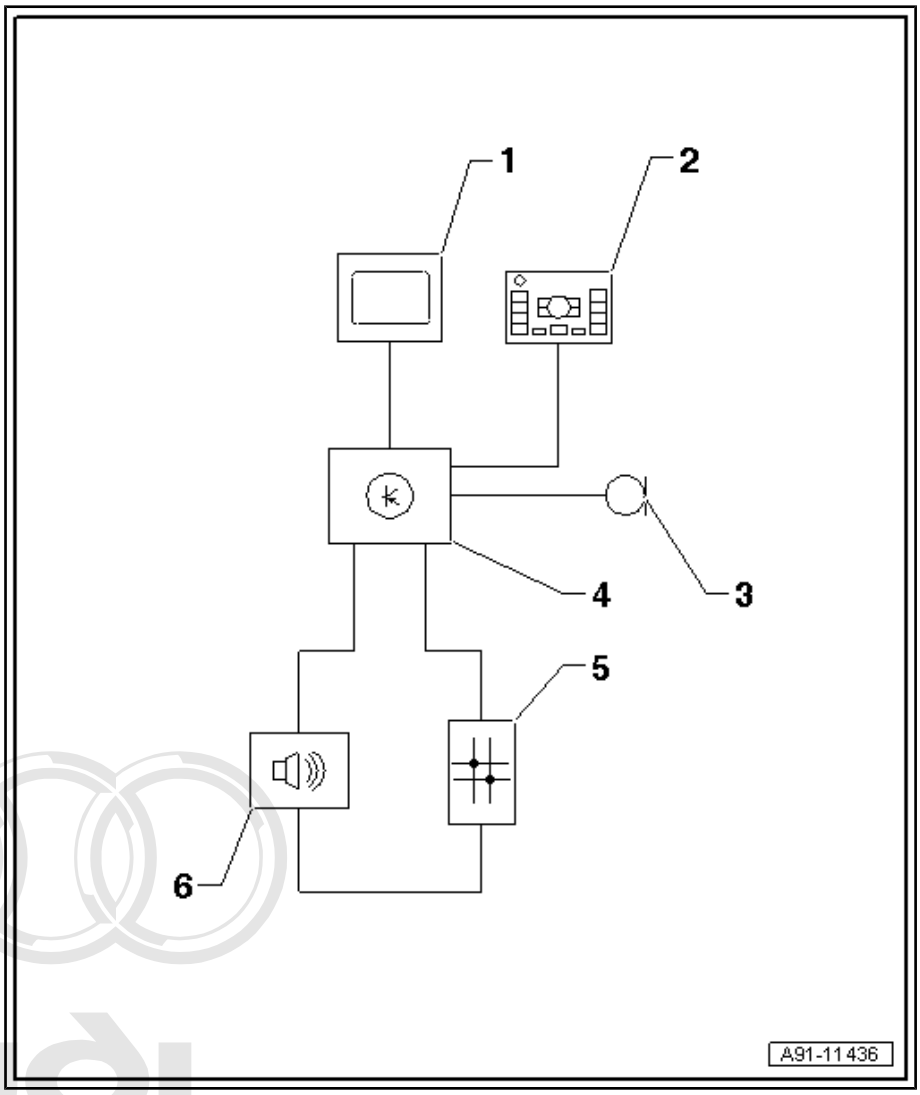

Fault finding is performed via the “Guided Fault Finding” ⇒ Vehicle diagnostic tester.

Protected by copyright. Copying for private or commercial purposes, in part or in whole, is not permitted unless authorised by AUDI AG. AUDI AG does not guarantee or accept any liability with respect to the correctness of information in this document. Copyright by AUDI AG.

Notes on Bluetooth technology

A standardised radio connection system (Bluetooth technology) is used to transmit data between the control unit 1 for information electronics - J794- and the telephone handset - R37- / mobile telephone - R54- / telephone handset 2 - R116- .

An additional transmitter and receiver unit is fitted in the control unit 1 for information electronics - J794- . A separate aerial for Bluetooth - R152- links the control unit 1 for information electronics - J794- and the telephone bracket - R126- / mobile telephone - R54- / rear charger unit for telephone - R151- , allowing cordless operation of the telephone handset - R37- / mobile telephone - R54- / telephone handset 2 - R116- .

The range of the radio wave connection is approx. 10 m.

6.2 Overview of fitting locations - telephone system

⇒ "6.2.1 Overview of fitting locations - telephone system, up to model year 2013, including vehicles with high-voltage electrical system", page 105

⇒ "6.2.2 Overview of fitting locations - telephone system, up to model year 2014, excluding vehicles with high-voltage electrical system", page 106

6.2.1 Overview of fitting locations - telephone system, up to model year 2013, including vehicles with high-voltage electrical system

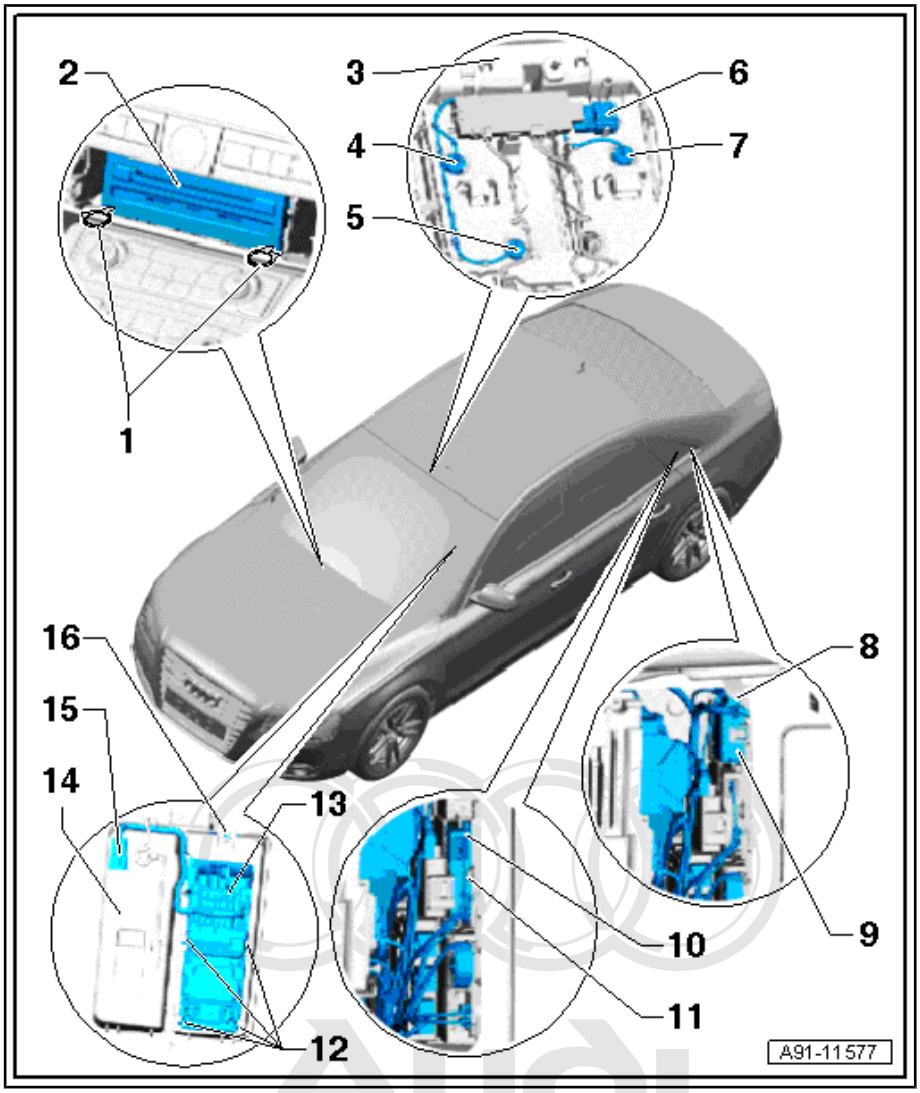

1 - Radio release tool - T10057-

2 - Control unit 1 for information electronics - J794-

- ❑ Pin assignment of mobile phone pre-installation ⇒ page 112
- ❑ Pin assignment for Bluetooth car phone ⇒ page 114
- ❑ Pin assignment for Bluetooth hands-free system ⇒ page 116
- ❑ Removing and installing

3 - Front interior light - W1-

- ❑ Microphone unit in front roof module - R164-
- ❑ Overview ⇒ page 107

4 - Front left microphone - R140-

- ❑ Removing and installing ⇒ page 108

5 - Internal microphone - R74-

- ❑ Removing and installing ⇒ page 108

6 - Electrical connector (T6k)

- ❑ Microphone unit in front roof module - R164-
- ❑ Exploded view ⇒ page 107

7 - Front right microphone - R141-

- ❑ Removing and installing ⇒ page 108

8 - Lug

Protected by copyright. Copying for private or commercial purposes, in part or in whole, is not permitted unless authorised by AUDI AG. AUDI AG does not guarantee or accept any liability with respect to the correctness of information in this document. Copyright by AUDI AG.

9 - Remote control receiver for auxiliary heater - R64-

- ❑ Removing and installing ⇒ page 84

10 - Lug

11 - Aerial amplifier for mobile telephone - R86-

- ❑ Pin assignment ⇒ page 118
- ❑ Removing and installing ⇒ page 109

12 - Bolt

- ❑ 4x
- ❑ 1 Nm

13 - Telephone bracket - R126- / rear charger unit for telephone - R151-

- ❑ Pin assignment ⇒ page 119
- ❑ Removing and installing (front) ⇒ page 110
- ❑ Removing and installing (rear) ⇒ page 111

14 - Storage box in centre armrest

15 - 5-pin connector - T5-

- ❑ T5i (front)
- ❑ T5k (rear)

16 - Bolt

- ❑ 1 Nm

6.2.2 Overview of fitting locations - telephone system, up to model year 2014, excluding vehicles with high-voltage electrical system

1 - Radio release tool - T10057-

2 - Control unit 1 for information electronics - J794-

- ❑ Pin assignment of mobile phone pre-installation ⇒ page 112
- ❑ Pin assignment for Bluetooth car phone ⇒ page 114
- ❑ Pin assignment for Bluetooth hands-free system ⇒ page 116
- ❑ Removing and installing

3 - Internal microphone - R74-

- ❑ Removing and installing ⇒ page 108

4 - Front left microphone - R140-

- ❑ Removing and installing ⇒ page 108

5 - Front interior light - W1-

- ❑ Microphone unit in front roof module - R164-
- ❑ Exploded view ⇒ page 107

6 - 6-pin connector - T6k-

- ❑ Microphone unit in front roof module - R164-
- ❑ Overview ⇒ page 107

7 - Front right microphone - R141-

- ❑ Removing and installing ⇒ page 108

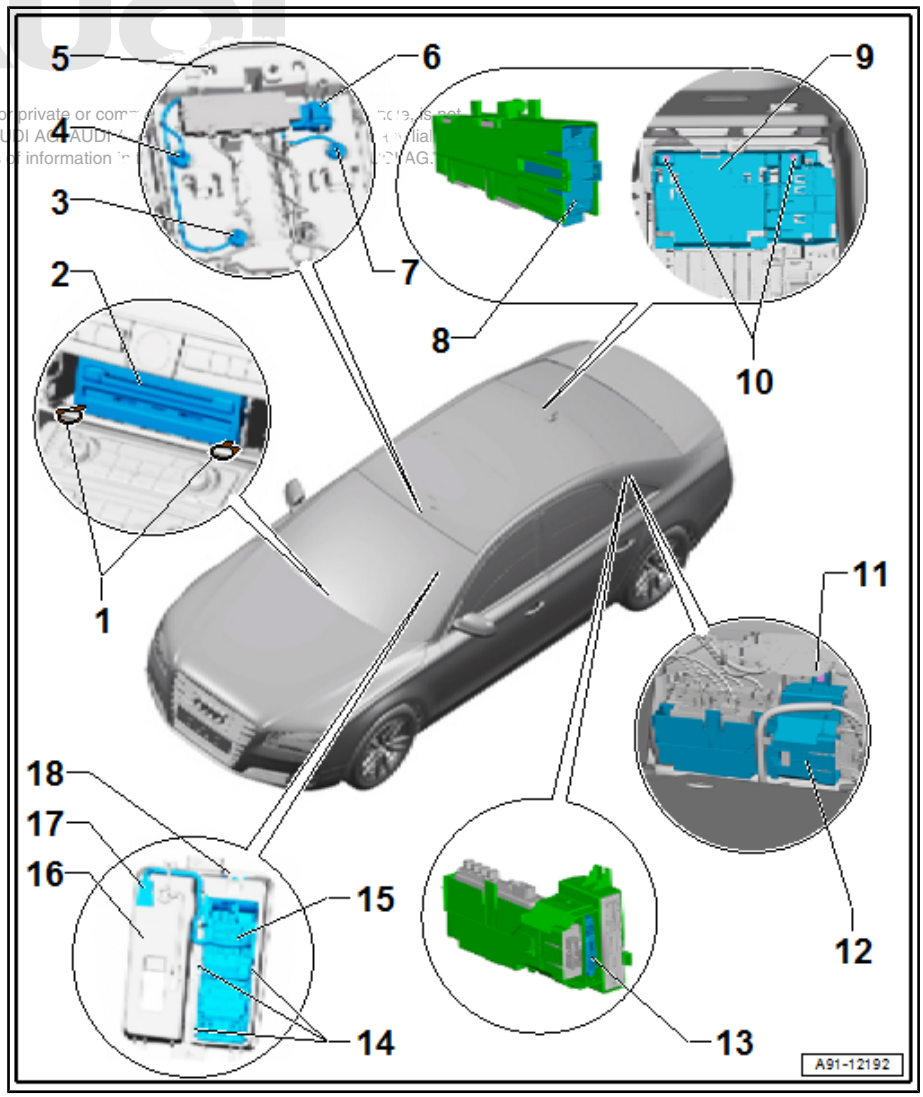

8 - Remote control receiver for auxiliary heater - R64-

- ❑ Removing and installing ⇒ page 85

9 - Bracket

10 - Nut

- ❑ 2x
- ❑ 4 Nm

11 - Nut

- ❑ 4 Nm

12 - Bracket

13 - Aerial amplifier for mobile telephone - R86-

- ❑ Pin assignment ⇒ page 118
- ❑ Removing and installing ⇒ page 109

14 - Bolt

- ❑ 4x
- ❑ 1 Nm

15 - Telephone bracket - R126- / rear charger unit for telephone - R151-

- ❑ Pin assignment ⇒ page 119
- ❑ Removing and installing (front) ⇒ page 110
- ❑ Removing and installing (rear) ⇒ page 111

Protected by copyright. Copying for private or commercial purposes, in part or in whole, is not permitted unless authorised by AUDI AG. AUDI AG does not guarantee or accept any liability with respect to the correctness of information in this document. Copyright by AUDI AG.

16 - Centre console storage compartment

- ❑ Removing and installing (front) ⇒ General body repairs, interior; Rep. gr. 68 ; Centre armrest (front); Exploded view - centre armrest (front) .
- ❑ Removing and installing (front) ⇒ General body repairs, interior; Rep. gr. 68 ; Centre console; Exploded view - centre console

17 - 5-pin connector - T5-

- ❑ T5i (front)
- ❑ T5k (rear)

18 - Bolt

- ❑ 1 Nm

6.3 Exploded view - microphone unit

One of the microphones (internal microphone - R74-) is connected directly to the digital sound package control unit - J525- . The other microphones are connected to the control unit 1 for information electronics - J794- .

Microphone unit in front roof module - R164-

1 - Front interior light - W1-

2 - 6-pin connector - T6k-

3 - Microphone (blue) to control unit 1 for information electronics - J794-

4 - Microphone (black) to digital sound package control unit - J525-

5 - Microphone (grey) to control unit 1 for information electronics - J794-

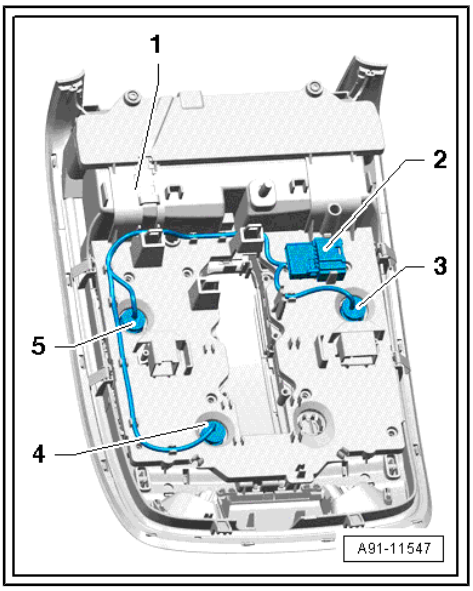

Pin assignment

Left-hand drive vehicles:

1 - Front left microphone - R140- (grey)

2 - 6-pin connector - T6k- , pins 1-2: Front left microphone - R140- (grey), pins 3-4: Internal microphone - R74- (black), pins 5-6: Front right microphone - R141- (blue)

3 - Internal microphone - R74- (black)

4 - Front right microphone - R141- (blue)

Right-hand drive vehicles:

1 - Front right microphone - R141- (blue)

2 - 6-pin connector - T6k- , pins 1-2: Front right microphone - R141- (blue), pins 3-4: Internal microphone - R74- (black), pins 5-6: Front left microphone - R140- (grey)

3 - Internal microphone - R74- (black)

4 - Front left microphone - R140- (grey)

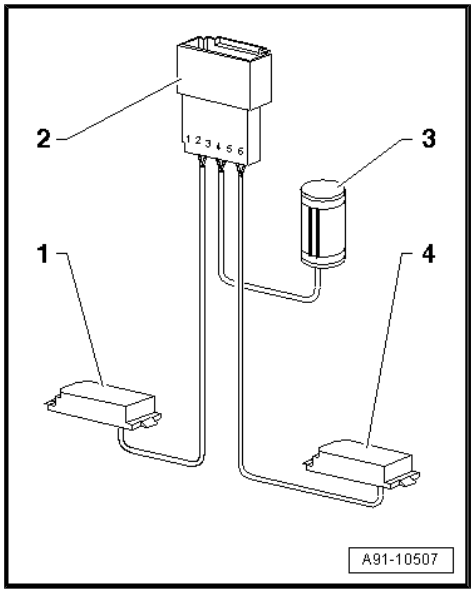

Removing and installing microphone unit in front roof module - R164-
⇒ “6.4 Removing and installing microphone unit in front roof module R164 ”, page 108 .

6.4 Removing and installing microphone unit in front roof module - R164-

The microphone unit in front roof module - R164- in the front interior light - W1- can only be renewed as a complete unit.

– Switch off ignition and all electrical equipment and remove ignition key.

Removing

– Remove front interior light - W1- ⇒ Electrical system; Rep. gr. 96 ; Lights; Overview of fitting locations - lights in roof trim .

Protected by copyright. Copying for private or commercial purposes, in part or in whole, is not permitted unless authorised by AUDI AG. AUDI AG does not guarantee or accept any liability with respect to the correctness and completeness of this document by AUDI AG.

– Unclip electrical connector -2- from retainer in front interior light - W1- -1-.

– Release and unplug connector -2- in front interior light - W1- -1-.

– Pry individual microphones -3-, -4- and -5- out of retainer.

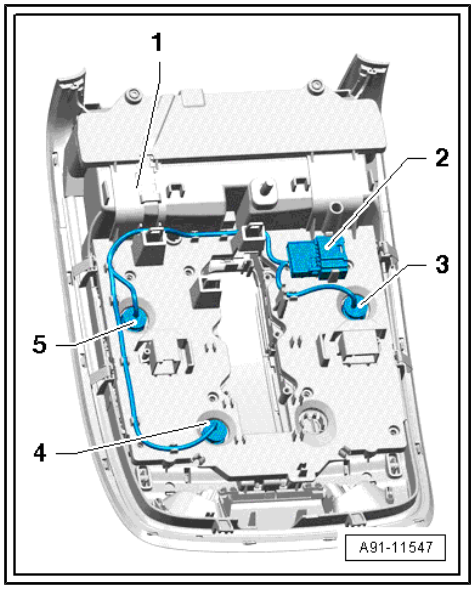

Installing

– Install in reverse sequence of removal.

6.5 Removing and installing aerial amplifier for mobile telephone - R86-

⇒ "6.5.1 Removing and installing aerial amplifier for mobile telephone R86 , up to model year 2013, including vehicles with high-voltage electrical system", page 109

⇒ "6.5.2 Removing and installing aerial amplifier for mobile telephone R86 , from model year 2014, excluding vehicles with high-voltage electrical system", page 109

6.5.1 Removing and installing aerial amplifier for mobile telephone - R86- , up to model year 2013, including vehicles with high-voltage electrical system

The aerial amplifier for mobile telephone - R86- -1- is located in the luggage compartment on the back panel (left-side).

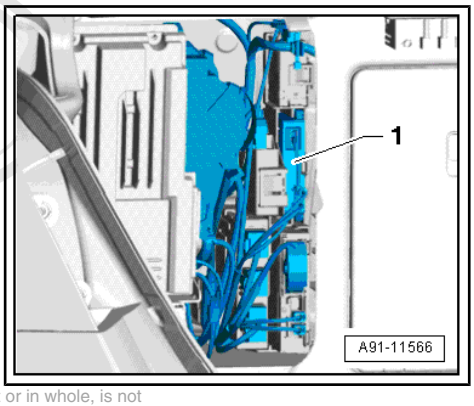

– Switch off ignition and all electrical equipment and remove ignition key.

Removing

– Remove luggage compartment back panel trim ⇒ General body repairs, interior; Rep. gr. 70 ; Luggage compartment trim panels; Exploded view - luggage compartment side trim .

Protected by copyright. Copying for private or commercial purposes, in part or in whole, is not permitted unless authorised by AUDI AG. Audi AG does not guarantee or accept any liability with respect to the correctness of information in this document. Copyright

– Release and unplug connectors at aerial amplifier for mobile telephone - R86- -1-.

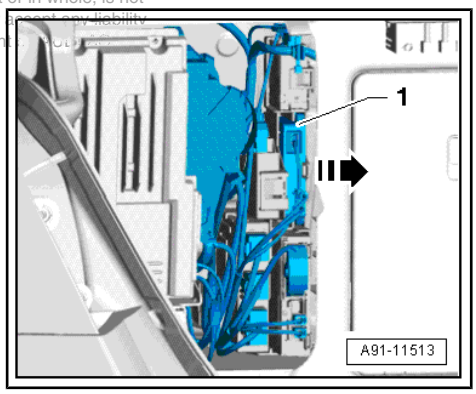

– Press lug -arrow- towards right side and take aerial amplifier for mobile telephone - R86- -1- out of bracket.

Installing

– Install in reverse sequence of removal.

6.5.2 Removing and installing aerial amplifier for mobile telephone - R86- , from model year 2014, excluding vehicles with high-voltage electrical system

The aerial amplifier for mobile telephone - R86- -1- is located in the luggage compartment on the back panel (left-side) in the holder.

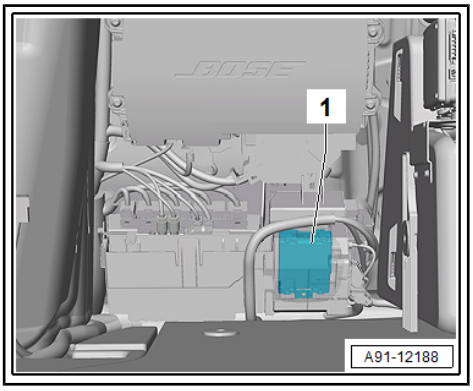

– Switch off ignition and all electrical equipment and remove ignition key.

Removing

– Remove luggage compartment back panel trim ⇒ General body repairs, interior; Rep. gr. 70 ; Luggage compartment trim panels; Exploded view - luggage compartment side trim .

Swivel the bracket with the control units towards the rear first.

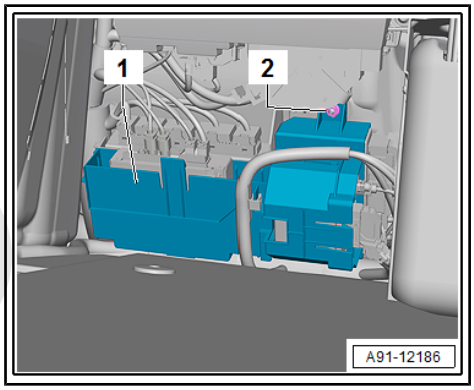

– Unscrew nut -2- and swivel bracket -1- towards rear.
– Pull aerial amplifier for mobile telephone - R86- -1- out of bracket -2-.
– Release and unplug the connectors at aerial amplifier for mobile telephone - R86- .

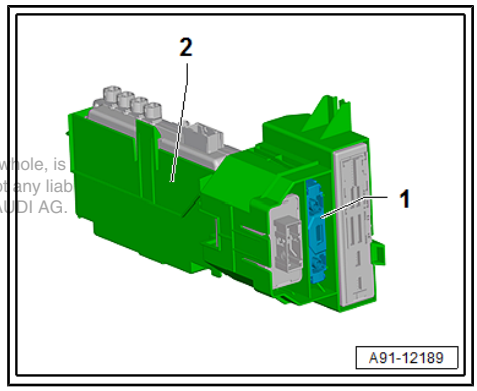

Protected by copyright. Copying for private or commercial purposes, in part or in whole, is permitted unless authorised by AUDI AG. AUDI AG does not guarantee or accept any liab with respect to the correctness of information in this document. Copyright by AUDI AG.

Installing

– Install in reverse sequence of removal.

Tightening torques

♦ ⇒ “6.2.2 Overview of fitting locations - telephone system, up to model year 2014, excluding vehicles with high-voltage electrical system”, page 106

6.6 Removing and installing telephone bracket - R126-

⇒ “6.6.1 Removing and installing telephone bracket R126 ”, page 110

⇒ “6.6.2 Removing and installing rear charger unit for telephone R151 ”, page 111

6.6.1 Removing and installing telephone bracket - R126-

The telephone bracket - R126- (front) -1- is located in the centre console storage compartment (front).

– Switch off ignition and all electrical equipment and remove ignition key.

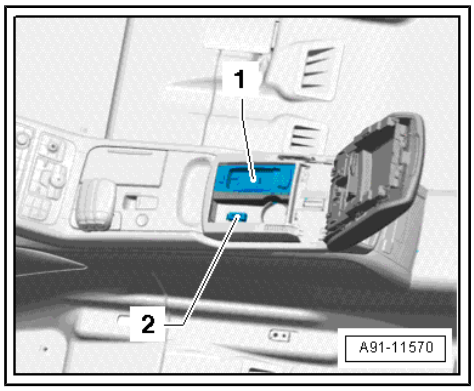

Removing

– Remove telephone handset - R37- / mobile telephone - R54- .
– Remove storage box in centre console ⇒ General body repairs, interior; Rep. gr. 68 ; Centre armrest (front); Exploded view - centre armrest (front) .

– Release and unplug connector -2-.
– Remove bolts -3- and -5-.
– Lift telephone bracket - R126- -4- out of storage box -1-.

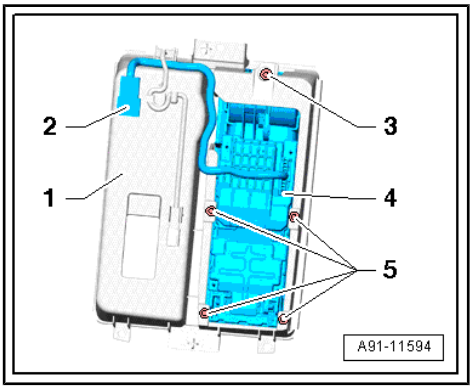

Installing

– Install in reverse sequence of removal.

Tightening torques

♦ ⇒ “6.2.1 Overview of fitting locations - telephone system, up to model year 2013, including vehicles with high-voltage electrical system”, page 105

♦ ⇒ “6.2.2 Overview of fitting locations - telephone system, up to model year 2014, excluding vehicles with high-voltage electrical system”, page 106

6.6.2 Removing and installing rear charger unit for telephone - R151-

The rear charger unit for telephone - R151- -1- is located in the rear centre armrest storage compartment.

– Switch off ignition and all electrical equipment and remove ignition key.

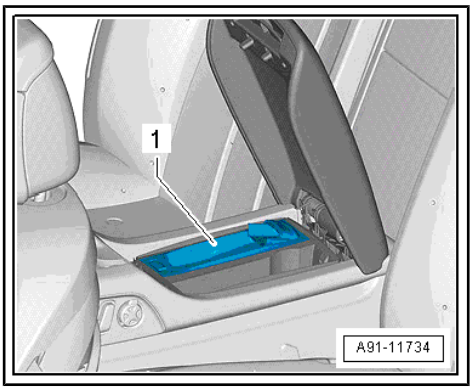

Removing

– Remove telephone handset 2 - R116- .
– Removing centre armrest (rear) ⇒ General body repairs, interior; Rep. gr. 68 ; Centre console; Exploded view - centre console

– Release and unplug connector -2-.
– Remove bolts -3- and -5-.
– Lift rear charger unit for telephone - R151- -4- out of storage box -1-.

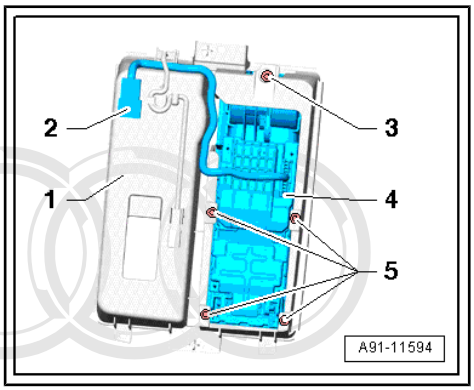

Installing

– Install in reverse sequence of removal.

Tightening torques

♦ ⇒ “6.2.1 Overview of fitting locations - telephone system, up to model year 2013, including vehicles with high-voltage electrical system”, page 105

♦ ⇒ “6.2.2 Overview of fitting locations - telephone system, up to model year 2014, excluding vehicles with high-voltage electrical system”, page 106

Protected by copyright. Copying for private or commercial purposes, in part or in whole, is not permitted unless authorised by AUDI AG. AUDI AG does not guarantee or accept any liability with respect to the correctness of information in this document. Copyright by AUDI AG.

6.7 Pin assignment

⇒ “6.7.1 Pin assignment for mobile phone pre-installation (9ZF)”, page 112

⇒ “6.7.2 Pin assignment for Bluetooth car phone (9ZW)”, page 114

⇒ “6.7.3 Pin assignment for Bluetooth hands-free system (9ZX)”, page 116

⇒ “6.7.4 Pin assignment for aerial amplifier for mobile telephone R86 , up to model year 2013”, page 118

⇒ “6.7.5 Pin assignment for aerial amplifier for mobile telephone R86 , from model year 2014”, page 118

⇒ “6.7.6 Pin assignment for telephone bracket R126 / R151 ”, page 119

6.7.1 Pin assignment for mobile phone pre-installation (9ZF)

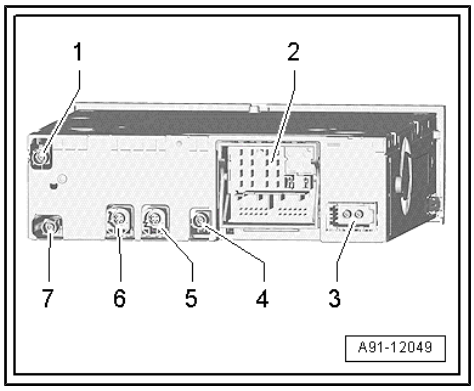

Control unit 1 for information electronics - J794-

1 - GSM connection, from roof aerial - R216- (telephone aerial - R65-)

2 - Connection block with four multi-pin connectors

3 - MOST bus

4 - FBAS input from TV tuner - R78- / DVD changer - R161-

5 - 4-pin connector - T4co- to display unit for front information display and operating unit control unit - J685-

6 - 4-pin connector - T4cn- to connection for external audio sources - R199-

7 - Not used

Reproduction by copyright, particularly in whole or in part or in whole, is not permitted unless authorised by AUDI AG. AUDI AG does not guarantee or accept any liability with respect to the correctness of information in this document. Copyright by AUDI AG.

Note

Contacts which are not listed are not used.

2 - Connection block with four multi-pin connectors

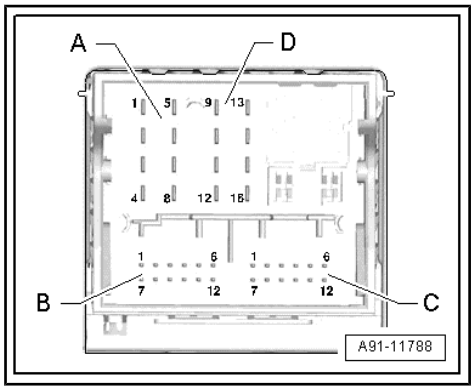

A - 8-pin connector - T8q-

3 - Wake-up to multimedia system operating unit - E380-

5 - Switch-on signal to aerial amplifier for mobile telephone - R86-

6 - Res MU to multimedia system operating unit - E380-

7 - Open circuit diagnostic lead

B - 12-pin connector - T12e-

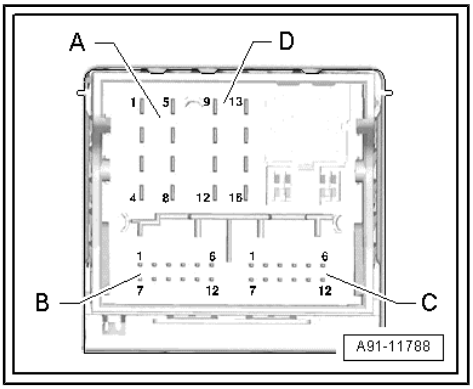

Left-hand drive vehicle

2 - Microphone input (+) from microphone unit in front roof module - R164- (front right microphone - R141-)

3 - Microphone input (–) from microphone unit in front roof module - R164- (front right microphone - R141-)

5 - FBAS wire (-) from reversing camera system control unit - J772- / control unit for overhead view camera - J928-

8 - Microphone input (+) from microphone unit in front roof module - R164- (front left microphone - R140-)

9 - Microphone input (–) from microphone unit in front roof module - R164- (front left microphone - R140-)

11 - FBAS wire (+) from reversing camera system control unit - J772- / control unit for overhead view camera - J928-

Right-hand drive vehicle

2 - Microphone input (+) from microphone unit in front roof module - R164- (front left microphone - R140-)

3 - Microphone input (–) from microphone unit in front roof module - R164- (front left microphone - R140-)

5 - FBAS wire (-) from reversing camera system control unit - J772- / control unit for overhead view camera - J928-

8 - Microphone input (+) from microphone unit in front roof module - R164- (front right microphone - R141-)

9 - Microphone input (–) from microphone unit in front roof module - R164- (front right microphone - R141-)

11 - FBAS wire (+) from reversing camera system control unit - J772- / control unit for overhead view camera - J928-

D - 8-pin connector - T8p-

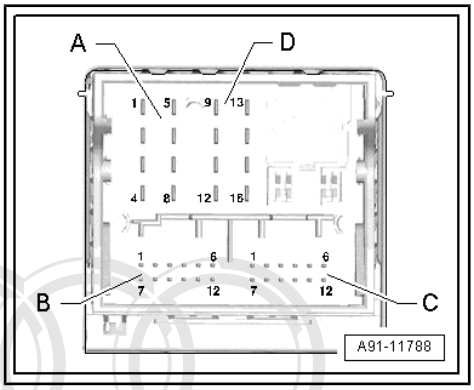

10 - Data from multimedia system operating unit - E380-

11 - Data to multimedia system operating unit - E380-

12 - Terminal 31

13 - DIAG signal from telephone bracket - R126-

14 - Res BT from multimedia system operating unit - E380-

15 - Terminal 30

3 - MOST bus

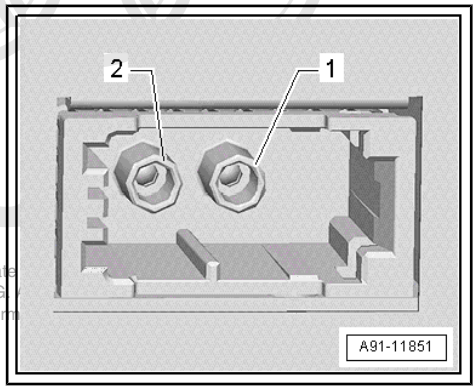

1 - Input

2 - Output

Protected by copyright. Copying for private
permitted unless authorised by AUDI AG
with respect to the correctness of inform

6.7.2 Pin assignment for Bluetooth car phone (9ZW)

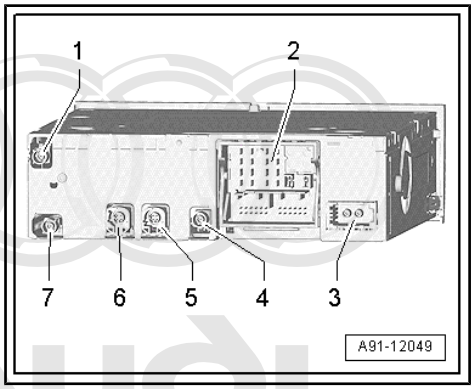

Control unit 1 for information electronics - J794-

1 - GSM connection, from roof aerial - R216- (telephone aerial - R65-)

2 - Connection block with four multi-pin connectors

3 - MOST bus

4 - FBAS input from TV tuner - R78- / DVD changer - R161-

5 - 4-pin connector - T4co- to display unit for front information display and operating unit control unit - J685-

6 - 4-pin connector - T4cn- to connection for external audio sources - R199-

7 - Not used

Protected by copyright. Copying for private or commercial purposes, in part or in whole, is not permitted unless authorised by AUDI AG. AUDI AG does not guarantee or accept any liability with respect to the correctness of information in this document. Copyright by AUDI AG.

Note

Contacts which are not listed are not used.

2 - Connection block with four multi-pin connectors

A - 8-pin connector - T8q-

3 - Wake-up to multimedia system operating unit - E380-

6 - Res MU to multimedia system operating unit - E380-

7 - Open circuit diagnostic lead

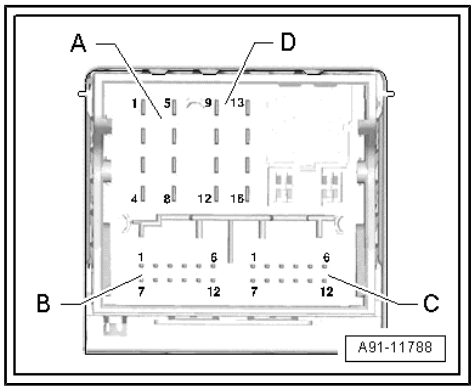

B - 12-pin connector - T12e-

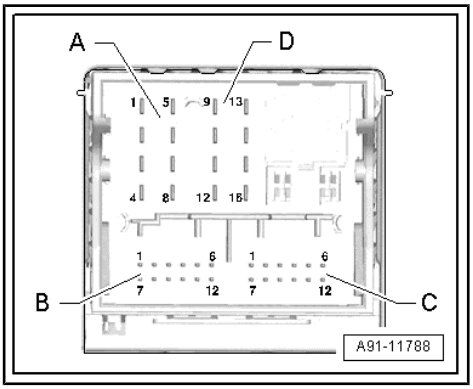

Left-hand drive vehicle

2 - Microphone input (+) from microphone unit in front roof module - R164- (front right microphone - R141-)

3 - Microphone input (–) from microphone unit in front roof module - R164- (front right microphone - R141-)

5 - FBAS wire (-) from reversing camera system control unit - J772- / control unit for overhead view camera - J928-

8 - Microphone input (+) from microphone unit in front roof module - R164- (front left microphone - R140-)

9 - Microphone input (–) from microphone unit in front roof module - R164- (front left microphone - R140-)

11 - FBAS wire (+) from reversing camera system control unit - J772- / control unit for overhead view camera - J928-

Right-hand drive vehicle

2 - Microphone input (+) from microphone unit in front roof module - R164- (front left microphone - R140-)

3 - Microphone input (–) from microphone unit in front roof module - R164- (front left microphone - R140-)

5 - FBAS wire (-) from reversing camera system control unit - J772- / control unit for overhead view camera - J928-

8 - Microphone input (+) from microphone unit in front roof module - R164- (front right microphone - R141-)

9 - Microphone input (–) from microphone unit in front roof module - R164- (front right microphone - R141-)

11 - FBAS wire (+) from reversing camera system control unit - J772- / control unit for overhead view camera - J928-

Notes: Copyright by AUDI AG. Reproduction, duplication, translation, storage, processing or use for commercial purposes, in part or in whole, is not permitted unless authorised by AUDI AG. AUDI AG does not guarantee or accept any liability with respect to the correctness of information in this document. Copyright by AUDI AG.

D - 8-pin connector - T8p-

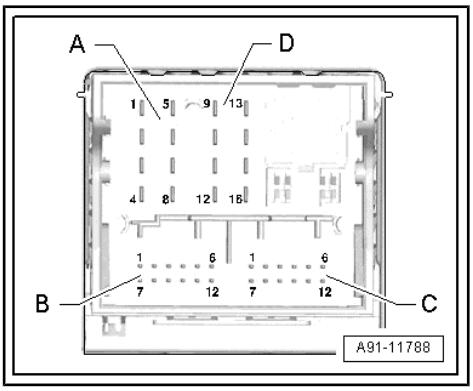

9 - Switch-on signal to telephone bracket - R126- / rear charger unit for telephone - R151-

10 - Data from multimedia system operating unit - E380-

11 - Data to multimedia system operating unit - E380-

12 - Terminal 31

14 - Res BT from multimedia system operating unit - E380-

15 - Terminal 30

3 - MOST bus

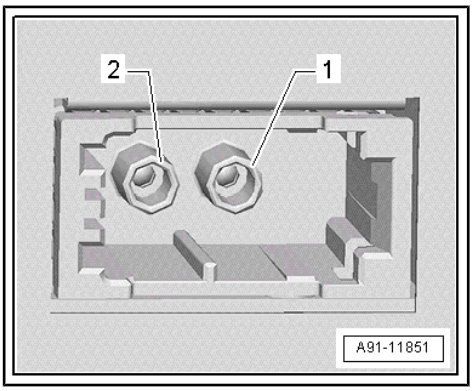

1 - Input

2 - Output

6.7.3 Pin assignment for Bluetooth hands-free system (9ZX)

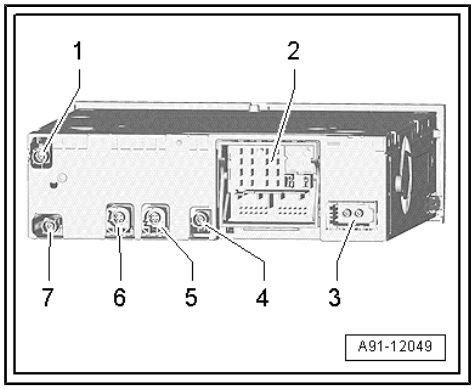

Control unit 1 for information electronics - J794-

1 - Not used

2 - Connection block with four multi-pin connectors

3 - MOST bus

4 - Not used

5 - 4-pin connector - T4co- to display unit for front information display and operating unit control unit - J685-

6 - 4-pin connector - T4cn- to connection for external audio sources - R199-

7 - Not used

Note

Contacts which are not listed are not used.

2 - Connection block with four multi-pin connectors

A - 8-pin connector - T8q-

3 - Wake-up to multimedia system operating unit - E380-

6 - Res MU to multimedia system operating unit - E380-

7 - Open circuit diagnostic lead

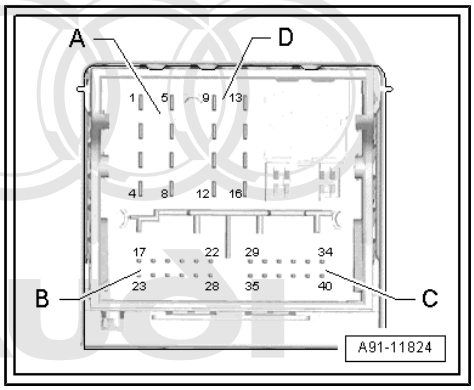

Protected by copyright. Copying for private or commercial purposes, in part or in whole, is not permitted unless authorised by AUDI AG. AUDI AG does not guarantee or accept any liability with respect to the correctness of information in this document. Copyright by AUDI AG.

B - 12-pin connector - T12e-

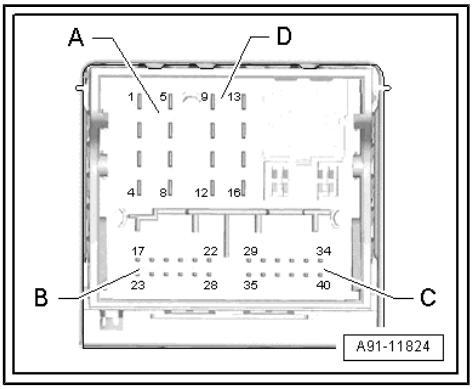

Left-hand drive vehicle

2 - Microphone input (+) from microphone unit in front roof module - R164- (front right microphone - R141-)

3 - Microphone input (–) from microphone unit in front roof module - R164- (front right microphone - R141-)

5 - FBAS wire (-) from reversing camera system control unit - J772- / control unit for overhead view camera - J928-

8 - Microphone input (+) from microphone unit in front roof module - R164- (front left microphone - R140-)

9 - Microphone input (-) from microphone unit in front roof module - R164- (front left microphone - R140-)

11 - FBAS wire (+) from reversing camera system control unit - J772- / control unit for overhead view camera - J928-

Right-hand drive vehicle

2 - Microphone input (+) from microphone unit in front roof module - R164- (front left microphone - R140-)

3 - Microphone input (-) from microphone unit in front roof module - R164- (front left microphone - R140-)

Protected by copyright. Copying for private or commercial purposes, in part or in whole, is not permitted unless authorised by AUDI AG. AUDI AG does not guarantee or accept any liability with respect to the correctness of information in this document. Copyright by AUDI AG.

5 - FBAS wire (-) from reversing camera system control unit - J772- / control unit for overhead view camera - J928-

8 - Microphone input (+) from microphone unit in front roof module - R164- (front right microphone - R141-)

9 - Microphone input (–) from microphone unit in front roof module - R164- (front right microphone - R141-)

11 - FBAS wire (+) from reversing camera system control unit - J772- / control unit for overhead view camera - J928-

D - 8-pin connector - T8p-

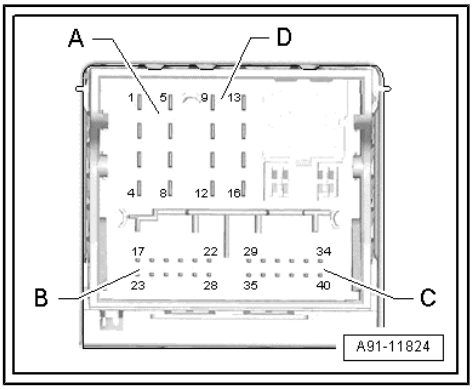

10 - Data from multimedia system operating unit - E380-

11 - Data to multimedia system operating unit - E380-

12 - Terminal 31

14 - Res BT from multimedia system operating unit - E380-

15 - Terminal 30

3 - MOST bus

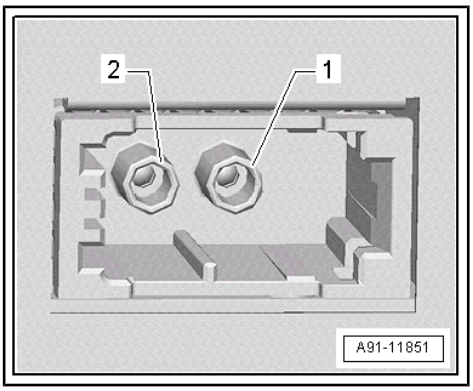

1 - Input

2 - Output

6.7.4 Pin assignment for aerial amplifier for mobile telephone - R86- , up to model year 2013

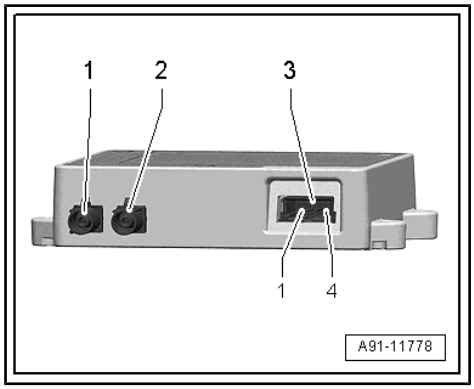

Aerial amplifier for mobile telephone - R86-

1 - GSM connection, from roof aerial - R216-

2 - Aerial connection to telephone bracket - R126-

3 - 4-pin connector - T4cm-

Note

Contacts which are not listed are not used.

3 - 4-pin connector - T4cm-

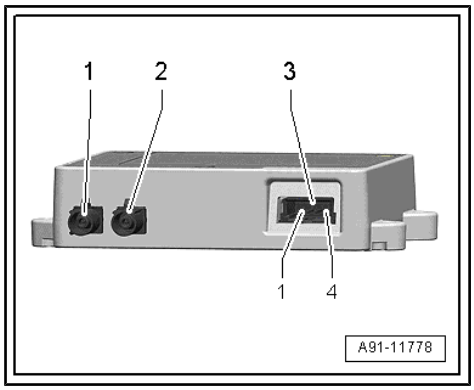

1 - Terminal 30

2 - Terminal 31

3 - Switch-on signal from control unit 1 for information electronics - J794-

4 - Safety PIN, not used

6.7.5 Pin assignment for aerial amplifier for mobile telephone - R86- , from model year 2014

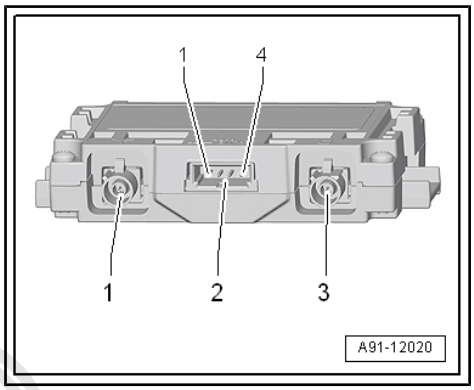

Aerial amplifier for mobile telephone - R86-

1 - GSM connection, from roof aerial - R216-

2 - 4-pin connector - T4cm-

3 - Aerial connection to telephone bracket - R126-

Note

Contacts which are not listed are not used.

2 - 4-pin connector - T4cm-

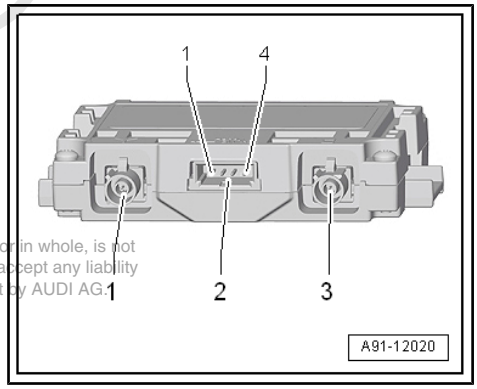

1 - Terminal 30

2 - Terminal 31

3 - Switch-on signal from control unit 1 for information electronics - J794-

4 - Safety PIN, not used

Protected by copyright. Copying for private or commercial purposes, in part or in whole, is not permitted unless authorised by AUDI AG. AUDI AG does not guarantee or accept any liability with respect to the correctness of information in this document. Copyright by AUDI AG.

6.7.6 Pin assignment for telephone bracket - R126- / -R151-

The telephone bracket - R126- / rear charger unit for telephone - R151- have an “adapter cable” leading from telephone bracket - R126- / rear charger unit for telephone - R151- (10-pin connector - T10t- / 10-pin connector - T10u-) to the coupling (5-pin connector - T5i- / 5-pin connector - T5k-) under the centre console (front/rear). The “adapter cable” is available separately ⇒ Electronic parts catalogue “ETKA” . The following pin assignments are for the connector sockets.

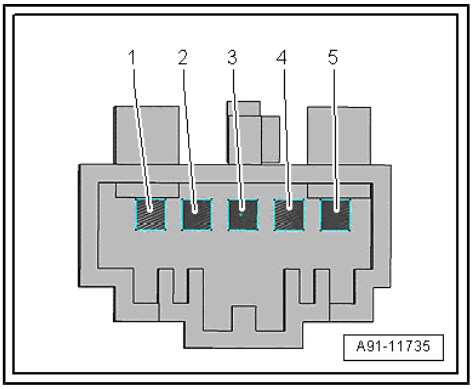

Telephone bracket - R126- , 5-pin connector - T5i-

1 - Terminal 30

2 - Switch-on signal to control unit 1 for information electronics - J794-

3 - Not used

4 - Terminal 31

5 - Terminal 58s

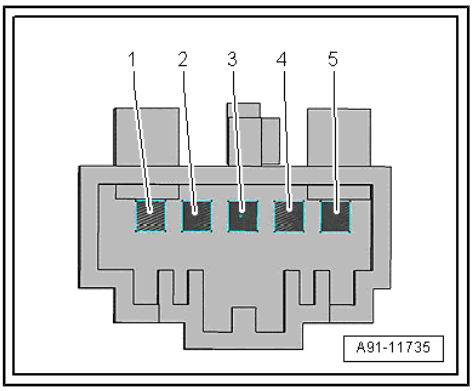

Rear charger unit for telephone - R151- , 5-pin connector - T5k-

1 - Terminal 30

2 - Switch-on signal to control unit 1 for information electronics - J794-

3 - Not used

4 - Terminal 31

5 - Terminal 58s

Protected by copyright. Copying for private or commercial purposes, in part or in whole, is not permitted unless authorised by AUDI AG. AUDI AG does not guarantee or accept any liability with respect to the correctness of information in this document. Copyright by AUDI AG.

7 Navigation system

⇒ “7.1 Layout - navigation system”, page 120

⇒ “7.2 Overview of fitting locations - navigation system”, page 123

⇒ “7.3 Pin assignment”, page 126

⇒ “7.4 Removing and installing chip card reader control unit”, page 130

7.1 Layout - navigation system

⇒ “7.1.1 Overview - navigation system”, page 120

⇒ “7.1.2 Overview - navigation system (Japan)”, page 122

7.1.1 Overview - navigation system

The navigation system (7T6) is part of the control unit 1 for information electronics - J794- in the dash panel.

The multimedia system operating unit - E380- is used for operation.

Navigation data are stored on an internal hard disk (HDD) on MMI system with maximum equipment.

Protected by copyright. Copying for private or commercial purposes, in part or in whole, is not permitted unless authorised by AUDI AG. AUDI AG does not guarantee or accept any liability with respect to the correctness of information in this document. Copyright by AUDI AG.

1 - Roof aerial - R216-

2 - Display unit for front information display and operating unit control unit - J685- in dash panel (centre)

3 - Control unit 1 for information electronics - J794- in dash panel

4 - Multimedia system operating unit - E380- in centre console (front)

5 - Data bus diagnostic interface - J533- in luggage compartment on back panel (right-side)

6 - Steering column electronics control unit - J527- on steering column on steering column switch

7 - Multi-function steering wheel

8 - Control unit in dash panel insert - J285- in dash panel

9 - Digital sound package control unit - J525- in luggage compartment on back panel (left-side)

10 - Radio - R- in luggage compartment on back panel (right-side)/in luggage compartment recess (left-side)

11 - Microphone unit in front roof module - R164- (front right microphone - R141-) in front interior light - W1-

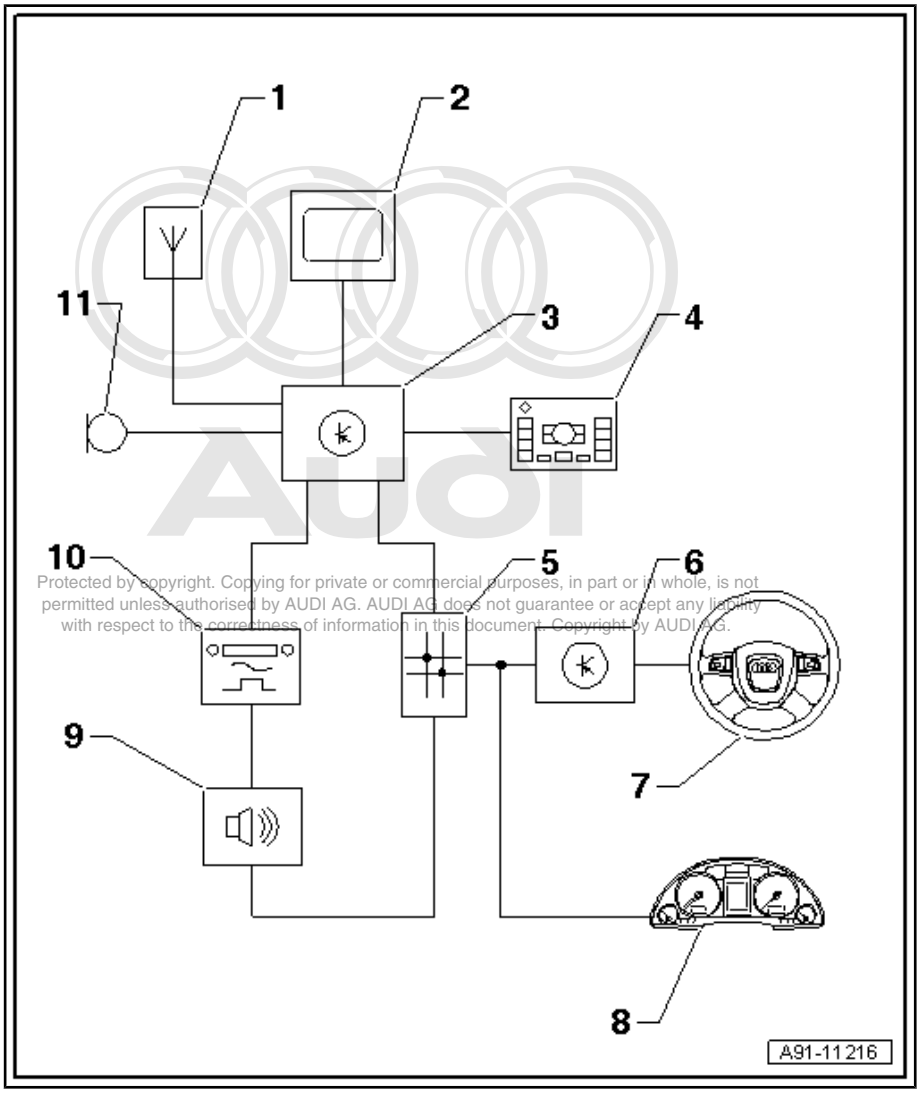

Protected by copyright. Copying for private or commercial purposes, in part or in whole, is not permitted unless authorised by AUDI AG. AUDI AG does not guarantee or accept any liability with respect to the correctness of information in this document. Copyright by AUDI AG.

Fault finding is performed via the “Guided Fault Finding” ⇒ Vehicle diagnostic tester.

Notes on MOST bus

In addition to the CAN bus, the fibre optic data bus “MOST bus” is used.

A “fibre optic cable” is used as the connecting cable. The fibre optic cables are fitted in corrugated tubes for protection.

Renew the complete fibre optic cable whenever possible.

The end faces of the connectors must not become dirty.

If connectors are unplugged: fit a protective cap for cable connector - VAS 6223/9- .

When installing the fibre optic cables, be sure to observe the minimum bending radius of 25 mm. Do not crush or kink the fibre optic cables.

Repairing fibre optic cables ⇒ Electrical system; Rep. gr. 97 ; Fibre optic cables .

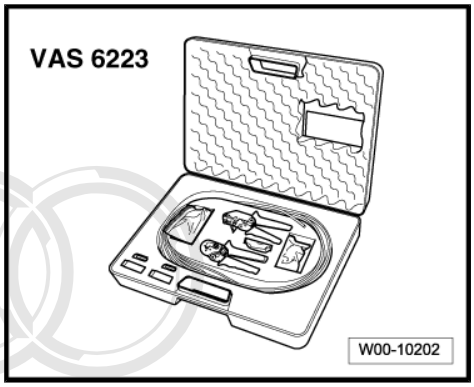

7.1.2 Overview - navigation system (Japan)

The navigation system (7T6) is part of the control unit 1 for information electronics - J794- in the dash panel.

The multimedia system operating unit - E380- is used for operation.

Protected by copyright. Copying for private or commercial purposes, in part or in whole, is not permitted unless authorised by AUDI AG. AUDI AG does not guarantee or accept any liability with respect to the correctness of information in this document. Copyright by AUDI AG.

Navigation data are stored on an internal hard disk (HDD).

A chip card reader control unit - J676- with traffic data aerial - R173- (toll) is integrated in the system.

1 - Display unit for front information display and operating unit control unit - J685- in dash panel (centre)

2 - Traffic data aerial - R173- on windscreen (top left)

3 - Chip card reader control unit - J676- in glove box

4 - Multimedia system operating unit - E380- in centre console (front)

5 - Control unit 1 for information electronics - J794- in dash panel

6 - Data bus diagnostic interface - J533- in luggage compartment on back panel (right-side)

7 - Digital sound package control unit - J525- in luggage compartment on back panel (left-side)

8 - Radio - R- in luggage compartment on back panel (right-side)/in luggage compartment recess (left-side)

9 - Microphone unit in front roof module - R164- (front right microphone - R141-) in front interior light - W1-

10 - Roof aerial - R216-

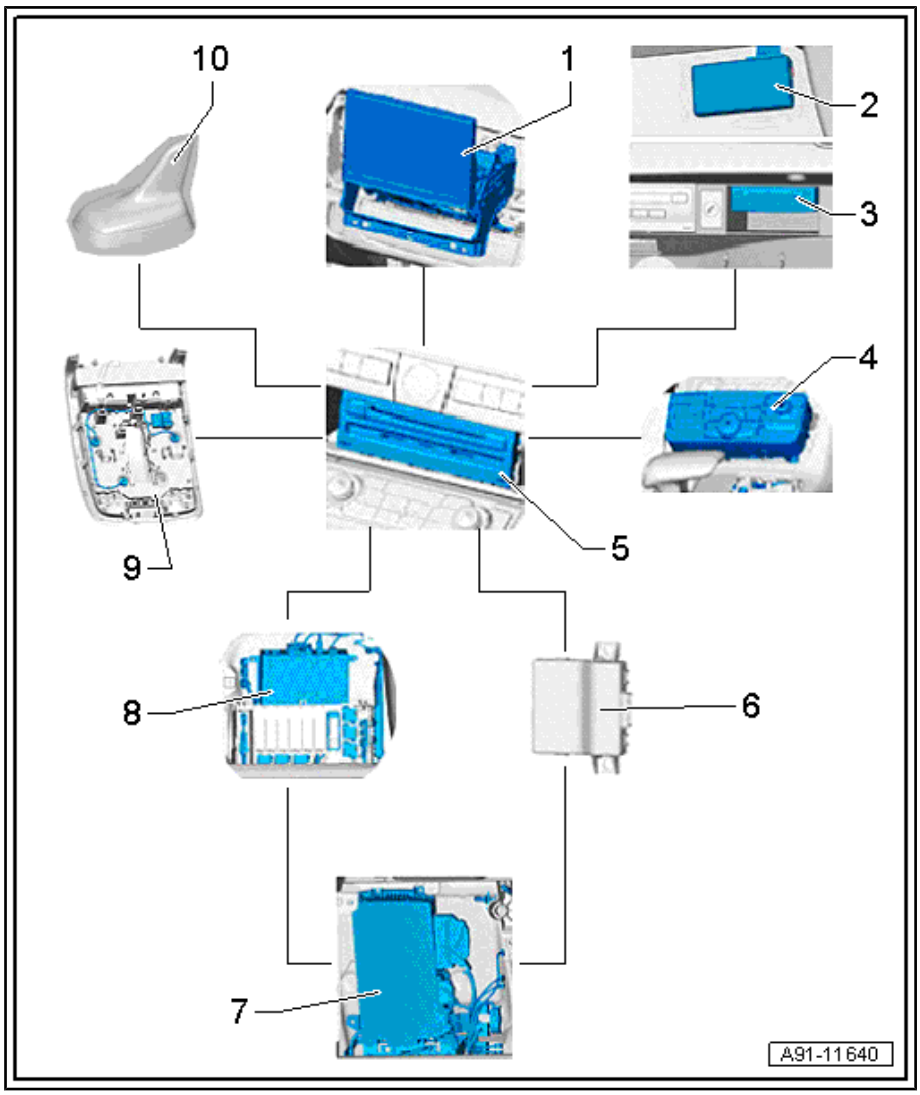

Fault finding is performed via the “Guided Fault Finding” ⇒ Vehicle diagnostic tester.

Notes on MOST bus

In addition to the CAN bus, the fibre optic data bus “MOST bus” is used.

A “fibre optic cable” is used as the connecting cable. The fibre optic cables are fitted in corrugated tubes for protection.

Renew the complete fibre optic cable whenever possible.

The end faces of the connectors must not become dirty.

If connectors are unplugged: fit a protective cap for cable connector - VAS 6223/9- .

When installing the fibre optic cables, be sure to observe the minimum bending radius of 25 mm. Do not crush or kink the fibre optic cables.

Repairing fibre optic cables ⇒ Electrical system; Rep. gr. 97 ; Fibre optic cables .

7.2 Overview of fitting locations - navigation system

⇒ “7.2.1 Overview of fitting locations - navigation system”, page 123

⇒ “7.2.2 Overview of fitting locations - navigation system (Japan)”, page 125

7.2.1 Overview of fitting locations - navigation system

Protected by copyright. Copying for private or commercial purposes, in part or in whole, is not permitted unless authorised by AUDI AG. AUDI AG does not guarantee or accept any liability with respect to the correctness of information in this document. Copyright by AUDI AG.

1 - Radio release tool - T10057-

2 - Control unit 1 for information electronics - J794-

- Pin assignment ⇒ page 126
- Removing and installing ⇒ page 14

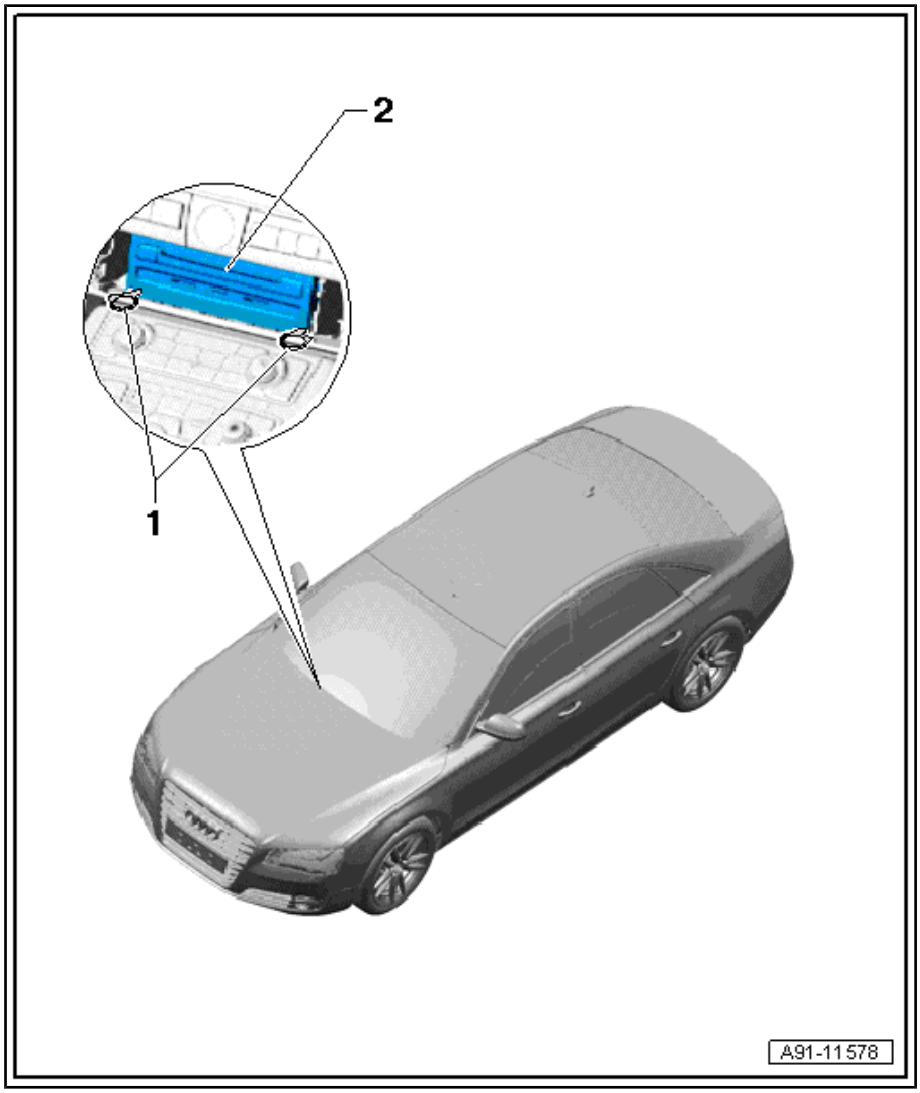

Protected by copyright. Copying for private or commercial purposes, in part or in whole, is not permitted unless authorised by AUDI AG. AUDI AG does not guarantee or accept any liability with respect to the correctness of information in this document. Copyright by AUDI AG.

7.2.2 Overview of fitting locations - navigation system (Japan)

1 - Chip card reader control unit - J676-

- ❑ Pin assignment ⇒ page 130
- ❑ Removing and installing ⇒ page 130

2 - Traffic data aerial - R173-

- ❑ Removing and installing ⇒ page 86

Protected by copyright. Copying for private or commercial purposes, in part or in whole, is not permitted unless authorised by AUDI AG. AUDI AG does not guarantee or assume any liability with respect to the correctness of information in this document. Copyright by AUDI AG.

3 - Bracket

- ❑ Bonded to windscreen

4 - Locking element

5 - Control unit 1 for information electronics - J794-

- ❑ Pin assignment ⇒ page 128
- ❑ Removing and installing ⇒ page 14

6 - Radio release tool - T10057-

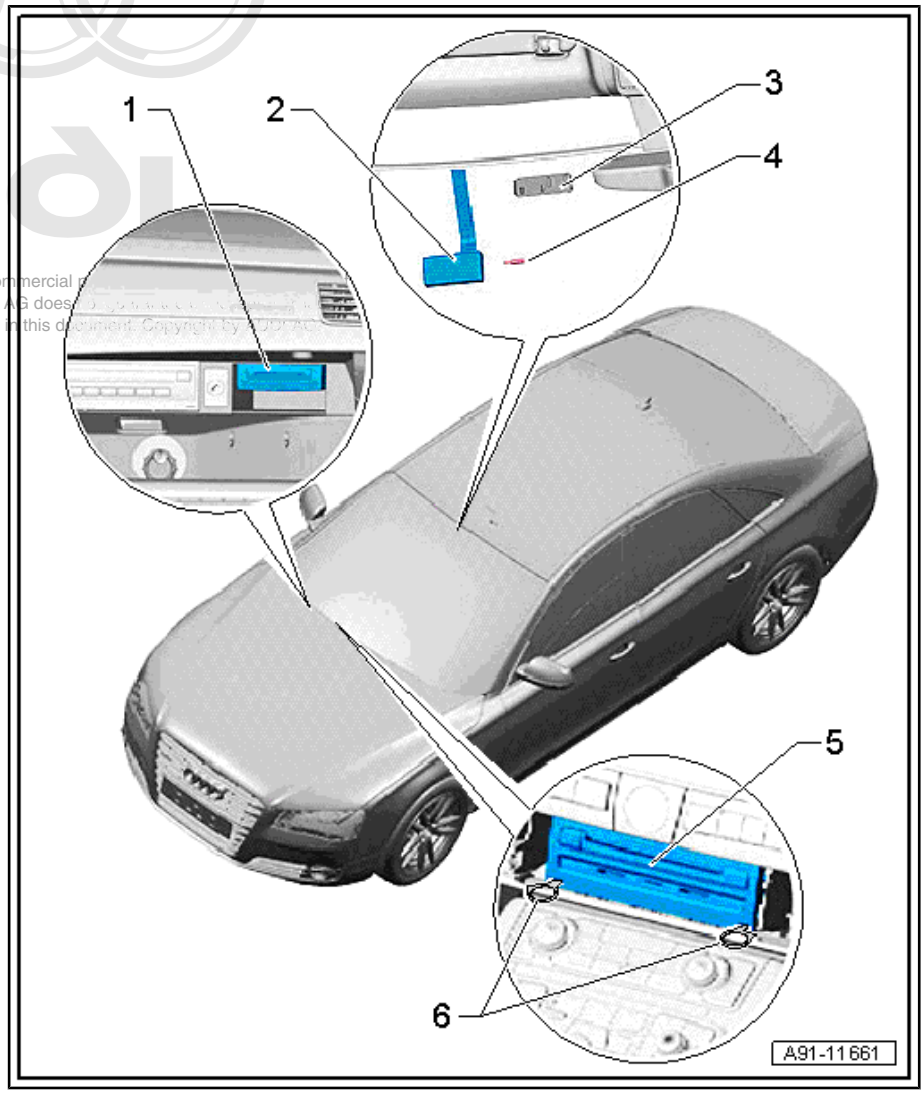

7.3 Pin assignment

⇒ “7.3.1 Pin assignment for control unit 1 for information electronics J794 ”, page 126

⇒ “7.3.2 Pin assignment for control unit 1 for information electronics J794 , Japan”, page 128

⇒ “7.3.3 Pin assignment for chip card reader control unit J676 , Japan”, page 130

7.3.1 Pin assignment for control unit 1 for information electronics - J794-

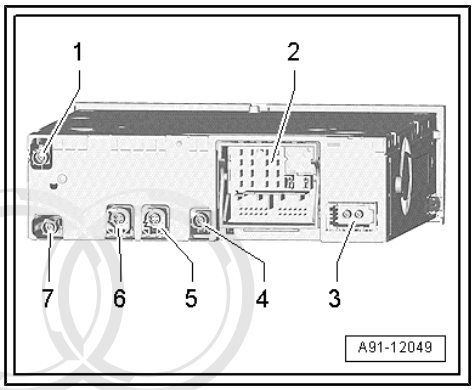

Control unit 1 for information electronics - J794-

1 - Not used

2 - Connection block with four multi-pin connectors

3 - MOST bus

4 - FBAS input from TV tuner - R78- / DVD changer - R161-

5 - 4-pin connector - T4co- to display unit for front information display and operating unit control unit - J685-

6 - 4-pin connector - T4cn- to connection for external audio sources - R199-

7 - GPS connection, from roof aerial - R216-

Note

Contacts which are not listed are not used.

Protected by copyright. Copying for private or commercial purposes, in part or in whole, is not permitted unless authorised by AUDI AG. AUDI AG does not guarantee or accept any liability with respect to the correctness of information in this document. Copyright by AUDI AG.

2 - Connection block with four multi-pin connectors

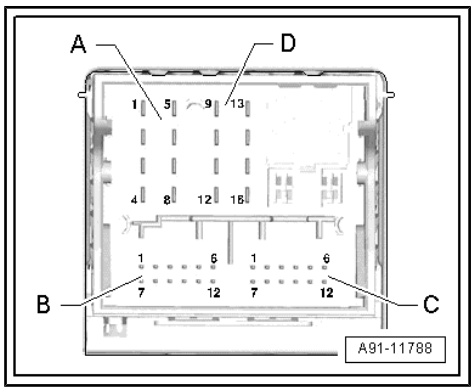

A - 8-pin connector - T8q-

3 - Wake-up to multimedia system operating unit - E380-

6 - Res MU to multimedia system operating unit - E380-

7 - Open circuit diagnostic lead

B - 12-pin connector - T12e-

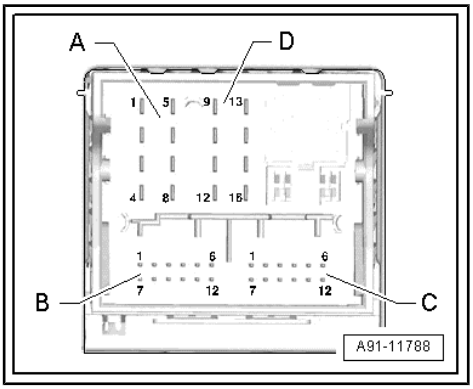

Left-hand drive vehicle

2 - Microphone input (+) from microphone unit in front roof module - R164- (front right microphone - R141-)

3 - Microphone input (–) from microphone unit in front roof module - R164- (front right microphone - R141-)

5 - FBAS wire (-) from reversing camera system control unit - J772- / control unit for overhead view camera - J928-

8 - Microphone input (+) from microphone unit in front roof module - R164- (front left microphone - R140-)

9 - Microphone input (–) from microphone unit in front roof module - R164- (front left microphone - R140-)

11 - FBAS wire (+) from reversing camera system control unit - J772- / control unit for overhead view camera - J928-

Right-hand drive vehicle

2 - Microphone input (+) from microphone unit in front roof module - R164- (front left microphone - R140-)

3 - Microphone input (–) from microphone unit in front roof module - R164- (front left microphone - R140-)

5 - FBAS wire (-) from reversing camera system control unit - J772- / control unit for overhead view camera - J928-

8 - Microphone input (+) from microphone unit in front roof module - R164- (front right microphone - R141-)

9 - Microphone input (–) from microphone unit in front roof module - R164- (front right microphone - R141-)

11 - FBAS wire (+) from reversing camera system control unit - J772- / control unit for overhead view camera - J928-

D - 8-pin connector - T8p-

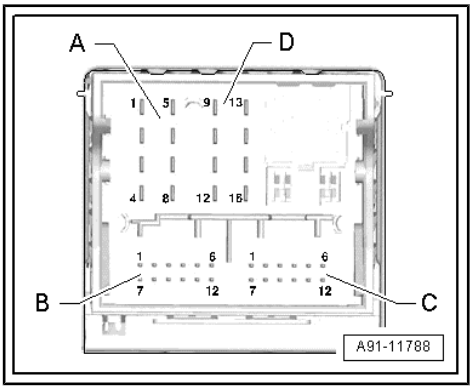

10 - Data from multimedia system operating unit - E380-

11 - Data to multimedia system operating unit - E380-

12 - Terminal 31

14 - Res BT from multimedia system operating unit - E380-

15 - Terminal 30

3 - MOST bus

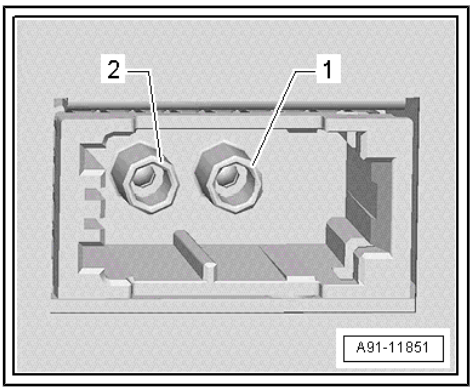

1 - Input

2 - Output

Protected by copyright. Copying for private or commercial purposes, in part or in whole, is not permitted unless authorised by AUDI AG. AUDI AG does not guarantee or accept any liability with respect to the correctness of information in this document. Copyright by AUDI AG.

7.3.2 Pin assignment for control unit 1 for information electronics - J794- , Japan

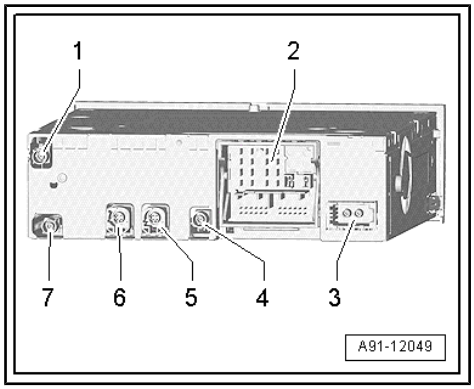

Control unit 1 for information electronics - J794-

1 - Not used

2 - Connection block with four multi-pin connectors

3 - MOST bus

4 - FBAS input from TV tuner - R78- / DVD changer - R161-

5 - 4-pin connector - T4co- to display unit for front information display and operating unit control unit - J685-

6 - 4-pin connector - T4cn- to connection for external audio sources - R199-

7 - GPS connection, from roof aerial - R216-

Note

Contacts which are not listed are not used.

2 - Connection block with four multi-pin connectors

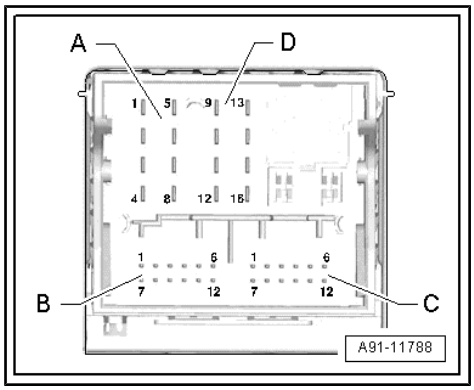

A - 8-pin connector - T8q-

3 - Wake-up to multimedia system operating unit - E380-

5 - Power "ON" to chip card reader control unit - J676-

6 - Res MU to multimedia system operating unit - E380-

7 - Open circuit diagnostic lead

Protected by copyright. Copying for private or commercial purposes, in part or in whole, is not permitted unless authorised by AUDI AG. AUDI AG does not guarantee or accept any liability with respect to the correctness of information in this document. Copyright by AUDI AG.

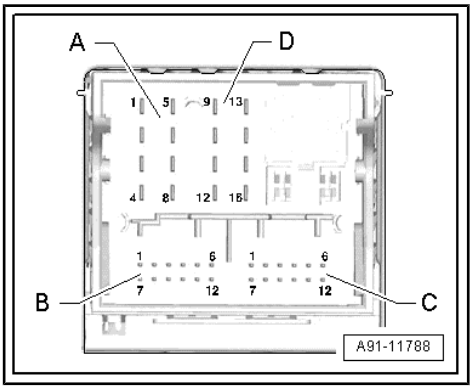

B - 12-pin connector - T12e-

Left-hand drive vehicle

1 - Not used

2 - Microphone input (+) from microphone unit in front roof module - R164- (front right microphone - R141-)

3 - Microphone input (–) from microphone unit in front roof module - R164- (front right microphone - R141-)

4 - Data VICS to chip card reader control unit - J676-

5 - FBAS wire (-) from reversing camera system control unit - J772- / control unit for overhead view camera - J928-

6 - Data ETC to chip card reader control unit - J676-

7 - Not used

8 - Microphone input (+) from microphone unit in front roof module - R164- (front left microphone - R140-)

9 - Microphone input (–) from microphone unit in front roof module - R164- (front left microphone - R140-)

10 - Data VICS from chip card reader control unit - J676-

11 - FBAS wire (+) from reversing camera system control unit - J772- / control unit for overhead view camera - J928-

12 - Data ETC from chip card reader control unit - J676-

Right-hand drive vehicle

1 - Not used

2 - Microphone input (+) from microphone unit in front roof module - R164- (front left microphone - R140-)

3 - Microphone input (–) from microphone unit in front roof module - R164- (front left microphone - R140-)

4 - Data VICS to chip card reader control unit - J676-

5 - FBAS wire (-) from reversing camera system control unit - J772- / control unit for overhead view camera - J928-

6 - Data ETC to chip card reader control unit - J676-

7 - Not used

8 - Microphone input (+) from microphone unit in front roof module - R164- (front right microphone - R141-)

9 - Microphone input (–) from microphone unit in front roof module - R164- (front right microphone - R141-)

10 - Data VICS from chip card reader control unit - J676-

11 - FBAS wire (+) from reversing camera system control unit - J772- / control unit for overhead view camera - J928-

12 - Data ETC from chip card reader control unit - J676-

Protected by copyright. Copying for private or commercial purposes, in part or in whole, is not permitted unless authorised by AUDI AG. AUDI AG does not guarantee or accept any liability with respect to the correctness of information in this document. Copyright by AUDI AG.

D - 8-pin connector - T8p-

10 - Data from multimedia system operating unit - E380-

11 - Data to multimedia system operating unit - E380-

12 - Terminal 31

14 - Res BT from multimedia system operating unit - E380-

15 - Terminal 30

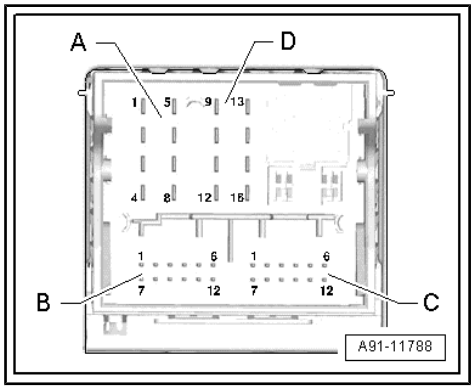

3 - MOST bus

1 - Input

2 - Output

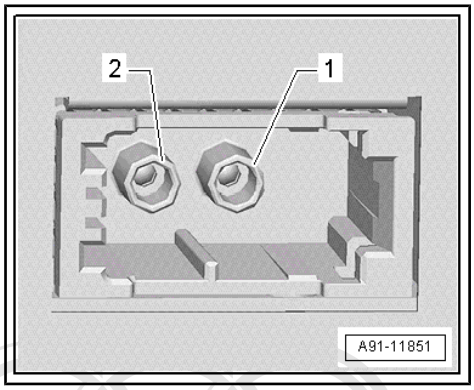

7.3.3 Pin assignment for chip card reader control unit - J676- , Japan

Chip card reader control unit - J676-

Note

Contacts which are not listed are not used.

32-pin connector - T32p-

1-16 - To traffic data aerial - R173-

17 - Data VICS to control unit 1 for information electronics - J794-

19 - Data VICS from control unit 1 for information electronics - J794-

21 - Switch-on signal to control unit 1 for information electronics - J794-

22 - Terminal 30

23 - Data ETC to control unit 1 for information electronics - J794-

25 - Data ETC from control unit 1 for information electronics - J794-

28 - Terminal 31

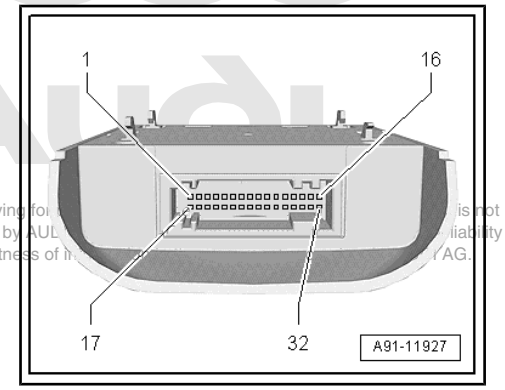

Protected by copyright. Copying for ... is not permitted unless authorised by AUDI ... liability with respect to the correctness of in... AG.

7.4 Removing and installing chip card reader control unit

The chip card reader control unit - J676- is located in the glove box.

– Switch off ignition and all electrical equipment and remove ignition key.

Removing

– Open glove box.

– Remove chip card.

– Slide chip card reader control unit - J676- -1- towards rear in direction of -arrow- until it can be detached from lining -2-.

– Pull out retaining clip -4-.

– Release and unplug connector -3- at chip card reader control unit - J676- -1-.

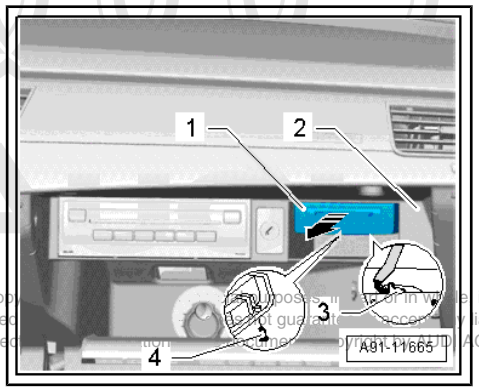

Installing

– Installation is carried out in reverse sequence; note the following:

Protected by copyright. Copy[illegible] permitted unless authorised [illegible] with respect to the correc[illegible] AG.

– Plug in connector -3- and then slide retaining clip -4- through opening.

– Make sure all retaining tabs of chip card reader control unit - J676- engage in lining.

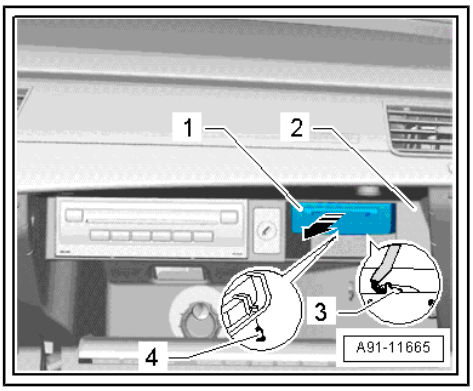

8 TV system

⇒ “8.1 Layout - TV system”, page 132

⇒ “8.2 Overview of fitting locations - TV system”, page 138

⇒ “8.3 Pin assignment”, page 142

⇒ “8.4 Removing and installing TV tuner”, page 147

⇒ “8.5 Removing and installing TV card reader”, page 150

8.1 Layout - TV system

⇒ “8.1.1 Layout - TV system”, page 132

⇒ “8.1.2 Layout - TV system (Japan)”, page 135

8.1.1 Layout - TV system

The TV system is part of the MMI infotainment system.

The TV tuner - R78- is connected to the other components of the infotainment system via the MOST bus. The multimedia system operating unit - E380- is used for operation.

A so-called “hybrid” tuner is fitted for receiving analogue and digital TV channels. From model year 2012, only a digital tuner (QU7) for digital reception is installed.

A DVD changer - R161- (6G0) is located in the glove box.

Up to model year 2013, including vehicles with high-voltage electrical system

Protected by copyright. Copying for private or commercial purposes, in part or in whole, is not permitted unless authorised by AUDI AG. AUDI AG does not guarantee or accept any liability with respect to the correctness of information in this document. Copyright by AUDI AG.

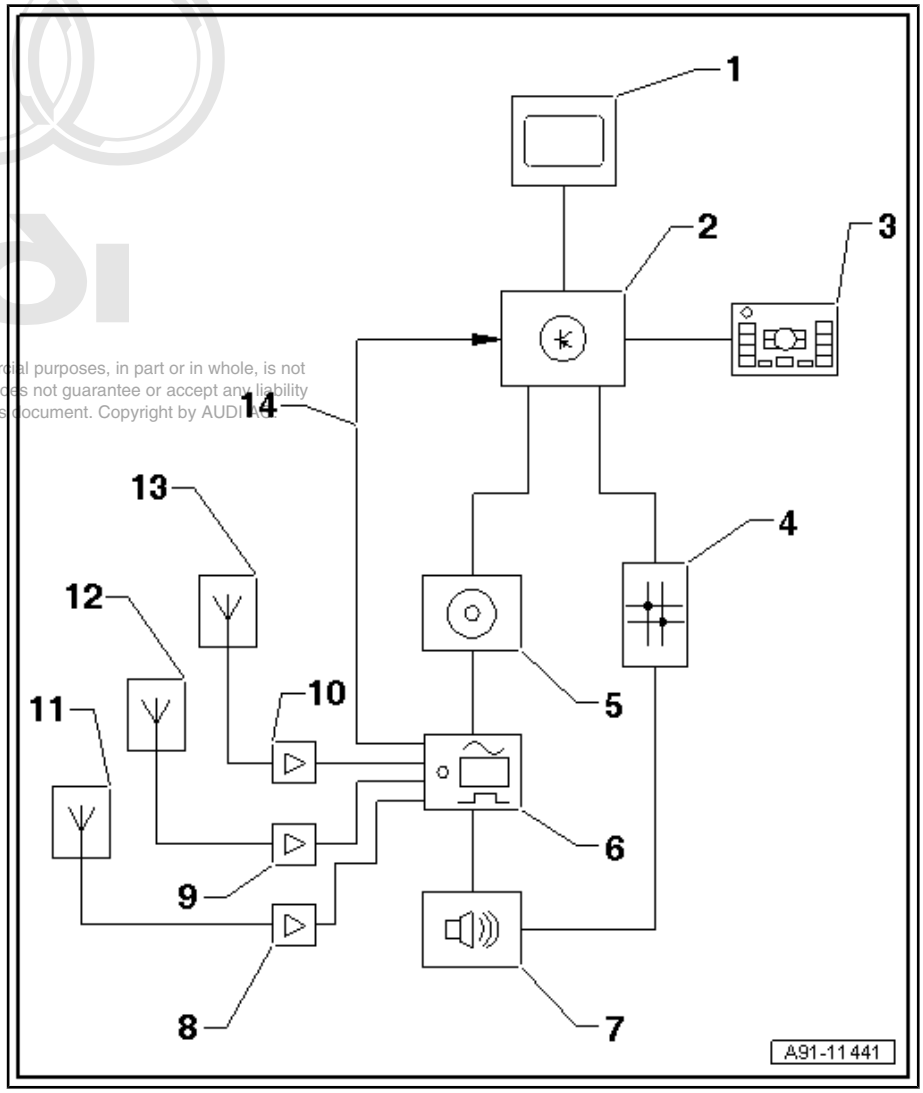

1 - Display unit for front information display and operating unit control unit - J685- in dash panel (centre)

2 - Control unit 1 for information electronics - J794- in dash panel

3 - Multimedia system operating unit - E380- in centre console (front)

4 - Data bus diagnostic interface - J533- in luggage compartment on back panel (right-side)

Protected by copyright. Copying for private or commercial purposes, in part or in whole, is not permitted unless authorised by AUDI AG. AUDI AG does not guarantee or accept any liability with respect to the correctness of information in this document. Copyright by AUDI AG.

5 - DVD changer - R161- in glove box

6 - TV tuner - R78- in luggage compartment on back panel (left-side)

7 - Digital sound package control unit - J525- in luggage compartment on back panel (left-side)

8 - Aerial amplifier 2 - R111- behind D-pillar trim (bottom right)

9 - Aerial amplifier 3 - R112- behind D-pillar trim (top left)

10 - Aerial amplifier 4 - R113- behind D-pillar trim (bottom left)

11 - TV aerial 2 - R56-

12 - TV aerial 1 - R55-

13 - TV aerial 3 - R57-

14 - FBAS wire to control unit 1 for information electronics - J794-

From model year 2014, excluding vehicles with high-voltage electrical system

1 - Display unit for front information display and operating unit control unit - J685- in dash panel (centre)

2 - Multimedia system operating unit - E380- in centre console (front)

3 - Data bus diagnostic interface - J533- in luggage compartment on back panel (right-side)

4 - TV tuner - R78- in luggage compartment recess (left)

5 - Digital sound package control unit - J525- in luggage compartment on back panel (left-side)

6 - Aerial amplifier

7 - TV aerials in rear window

8 - DVD changer - R161- in glove box

9 - Control unit 1 for information electronics - J794- in dash panel

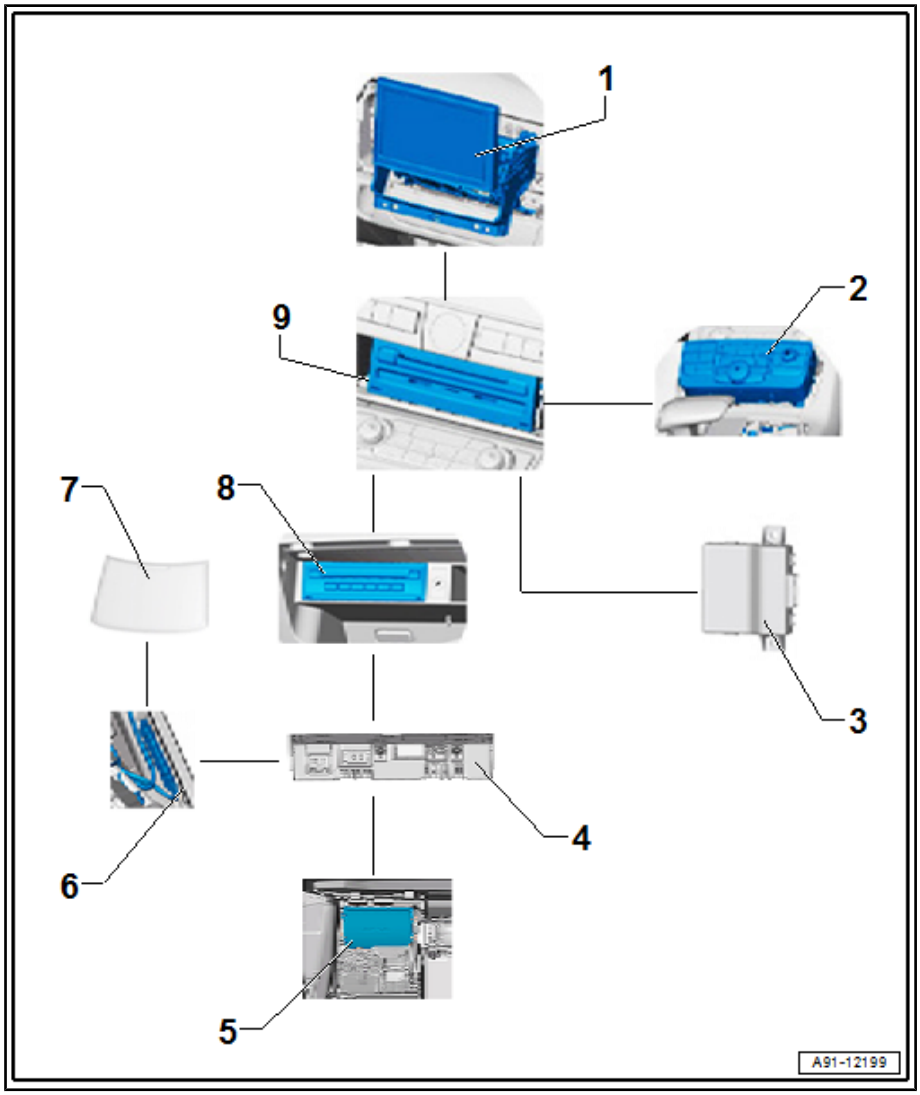

Fault finding is performed via the “Guided Fault Finding” ⇒ Vehicle diagnostic tester.

Notes on MOST bus

In addition to the CAN bus, the fibre optic data bus “MOST bus” is used.

A “fibre optic cable” is used as the connecting cable. The fibre optic cables are fitted in corrugated tubes for protection.

Renew the complete fibre optic cable whenever possible.

The end faces of the connectors must not become dirty.

Protected by copyright. Copying for private or commercial purposes, in part or in whole, is not permitted unless authorised by AUDI AG. AUDI AG does not guarantee or accept any liability with respect to the correctness of information in this document. Copyright by AUDI AG.

If connectors are unplugged: fit a protective cap for cable connector - VAS 6223/9- .

When installing the fibre optic cables, be sure to observe the minimum bending radius of 25 mm. Do not crush or kink the fibre optic cables.

Repairing fibre optic cables ⇒ Electrical system; Rep. gr. 97 ; Fibre optic cables .

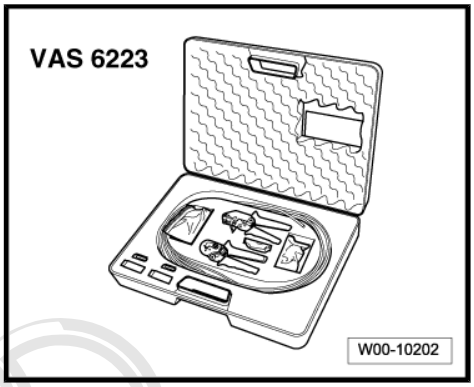

8.1.2 Layout - TV system (Japan)

The TV system is part of the MMI infotainment system.

The TV tuner - R78- is connected to the other components of the infotainment system via the MOST bus. The multimedia system operating unit - E380- is used for operation.

A so-called “hybrid” tuner is fitted for receiving analogue and digital TV channels. From model year 2012, only a digital tuner (QU7) for digital reception is installed.

A TV card reader - R204- for receiving pay-TV channels is connected to the TV tuner - R78- . A TV card reader - R204- is no longer fitted in models with a digital TV tuner. Instead, the digital TV tuner contains a SIM card slot.

Protected by copyright. Copying for private or commercial purposes, in part or in whole, is not permitted unless authorised by AUDI AG. AUDI AG does not guarantee or accept any liability with respect to the correctness of information in this document. Copyright by AUDI AG.

A DVD changer - R161- (6G0) is located in the glove box.

Fault finding is performed via the “Guided Fault Finding” ⇒ Vehicle diagnostic tester.

Up to model year 2013, including vehicles with high-voltage electrical system

1 - Display unit for front information display and operating unit control unit - J685- in dash panel (centre)

2 - Multimedia system operating unit - E380- in centre console (front)

3 - Data bus diagnostic interface - J533- in luggage compartment on back panel (right-side)

4 - TV card reader - R204- in luggage compartment, on luggage compartment back panel trim (left-side)

5 - Digital sound package control unit - J525- in luggage compartment on back panel (left-side)

6 - TV tuner - R78- in luggage compartment on back panel (left-side)

7 - Aerial amplifier

8 - TV aerials in rear window

9 - DVD changer - R161- in glove box

10 - Control unit 1 for information electronics - J794- in dash panel

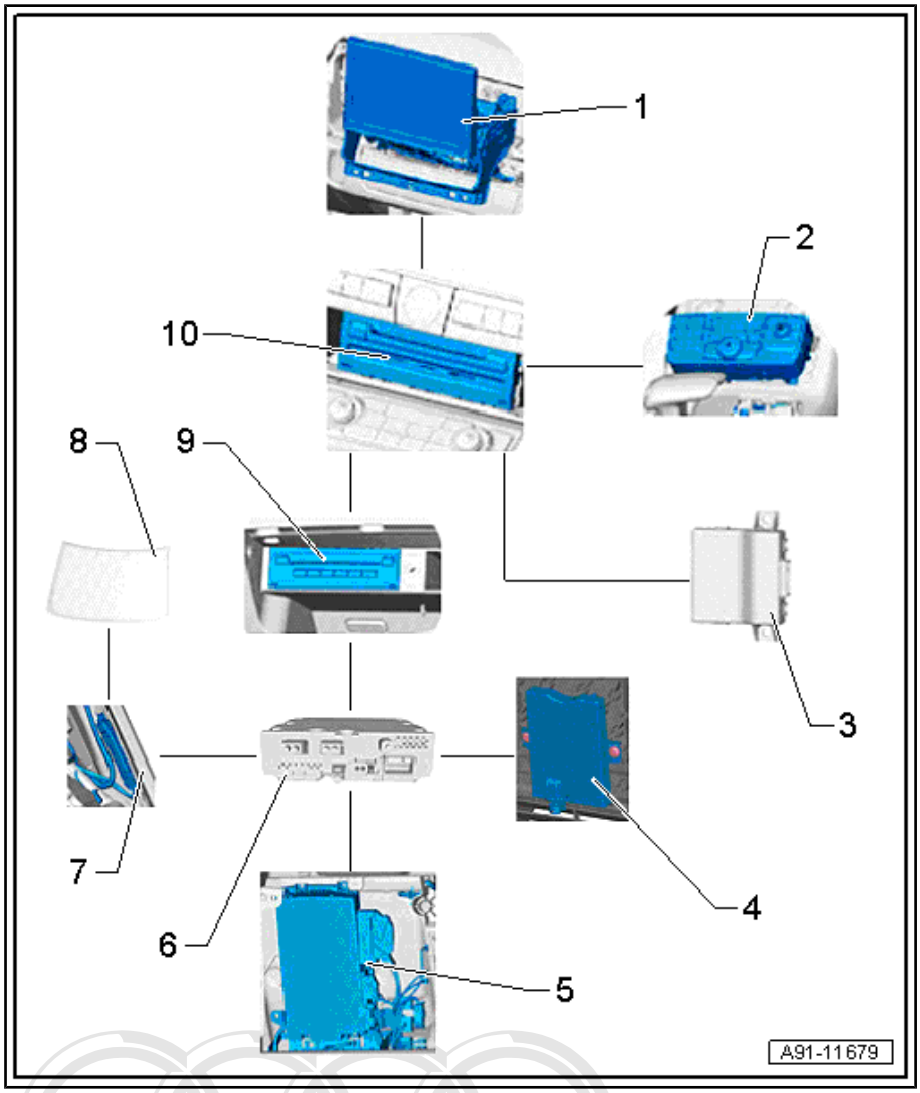

From model year 2014, excluding vehicles with high-voltage electrical system

Protected by copyright. Copying for private or commercial purposes, in part or in whole, is not permitted unless authorised by AUDI AG. AUDI AG does not guarantee or accept any liability with respect to the correctness of information in this document. Copyright by AUDI AG.

1 - Display unit for front information display and operating unit control unit - J685- in dash panel (centre)

2 - Multimedia system operating unit - E380- in centre console (front)

3 - Data bus diagnostic interface - J533- in luggage compartment on back panel (right-side)

4 - TV tuner - R78- in luggage compartment recess (left)

5 - Digital sound package control unit - J525- in luggage compartment on back panel (left-side)

6 - Aerial amplifier

7 - TV aerials in rear window

8 - DVD changer - R161- in glove box

9 - Control unit 1 for information electronics - J794- in dash panel

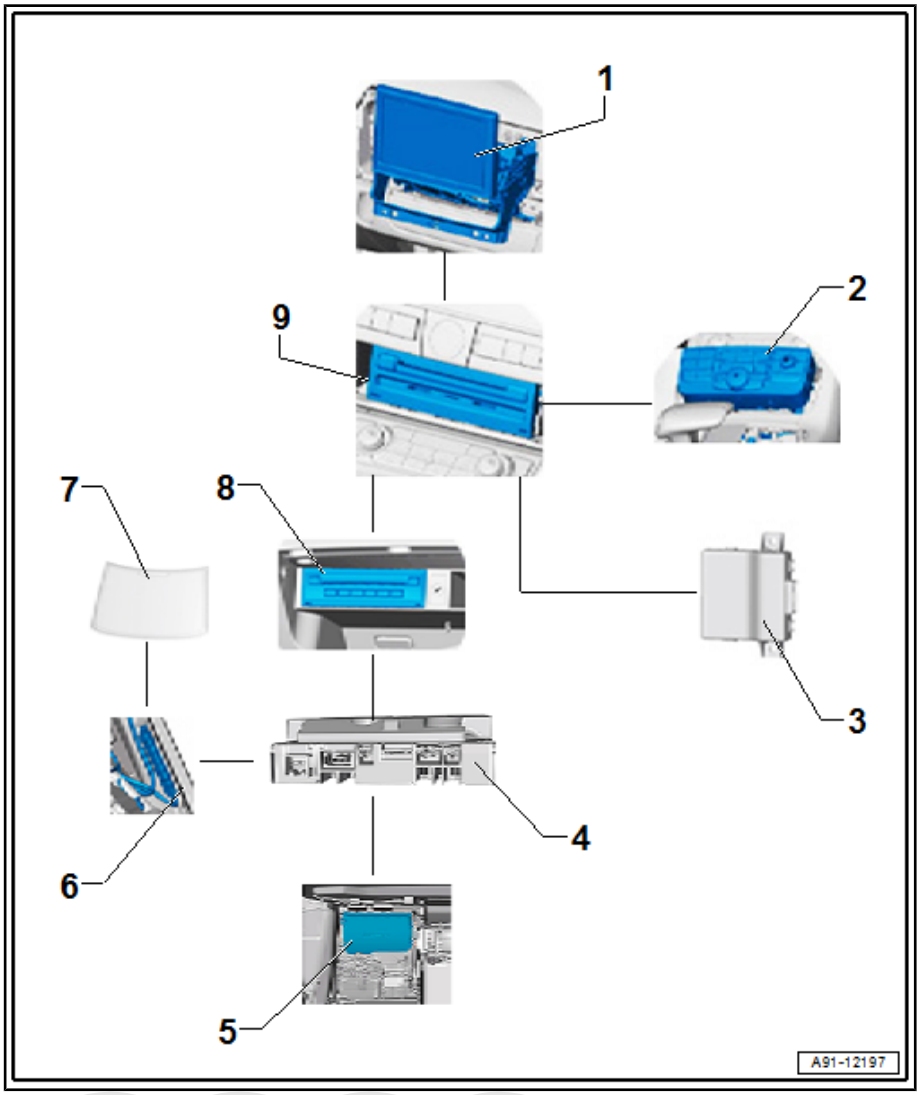

Notes on MOST bus

In addition to the CAN bus, the fibre optic data bus “MOST bus” is used.

A “fibre optic cable” is used as the connecting cable. The fibre optic cables are fitted in corrugated tubes for protection.

Renew the complete fibre optic cable whenever possible.

The end faces of the connectors must not become dirty.

If connectors are unplugged: fit a protective cap for cable connector - VAS 6223/9- .

When installing the fibre optic cables, be sure to observe the minimum bending radius of 25 mm. Do not crush or kink the fibre optic cables.

Repairing fibre optic cables ⇒ Electrical system; Rep. gr. 97 ; Fibre optic cables .

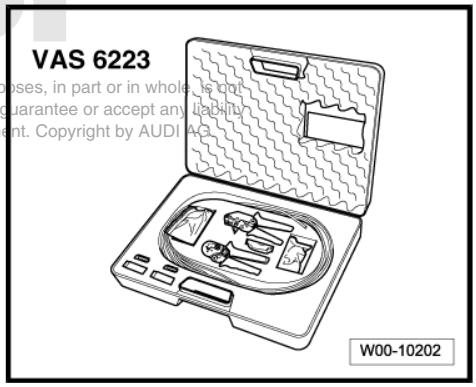

Protected by copyright. Copying for private or commercial purposes, in part or in whole, is not permitted unless authorised by AUDI AG. AUDI AG does not guarantee or accept any liability with respect to the correctness of information in this document. Copyright by AUDI AG.

8.2 Overview of fitting locations - TV system

⇒ “8.2.1 Overview of fitting locations - TV system, up to model year 2013, including vehicles with high-voltage electrical system”, page 138

⇒ “8.2.2 Overview of fitting locations - TV system, from model year 2014, excluding vehicles with high-voltage electrical system”, page 139

⇒ “8.2.3 Overview of fitting locations - TV system, Japan, up to model year 2013, including vehicles with high-voltage electrical system”, page 140

⇒ “8.2.4 Overview of fitting locations - TV system, Japan, from model year 2014, excluding vehicles with high-voltage electrical system”, page 141

8.2.1 Overview of fitting locations - TV system, up to model year 2013, including vehicles with high-voltage electrical system

1 - Radio release tool - T10057-

2 - DVD changer - R161-
- ❑ Pin assignment ⇒ page 98
- ❑ Removing and installing ⇒ page 98

3 - Nut
- ❑ 3x
- ❑ 4 Nm

4 - Bracket

5 - Nut
- ❑ 4 Nm

6 - Bracket

7 - TV tuner - R78-
- ❑ Pin assignment (hybrid) ⇒ page 142
- ❑ Removing and installing ⇒ page 147

- Digital TV tuner (from model year 2012 onwards)
- ❑ Pin assignment ⇒ page 145
- ❑ Removing and installing ⇒ page 147

8 - Bolt
- ❑ 4x
- ❑ 4 Nm

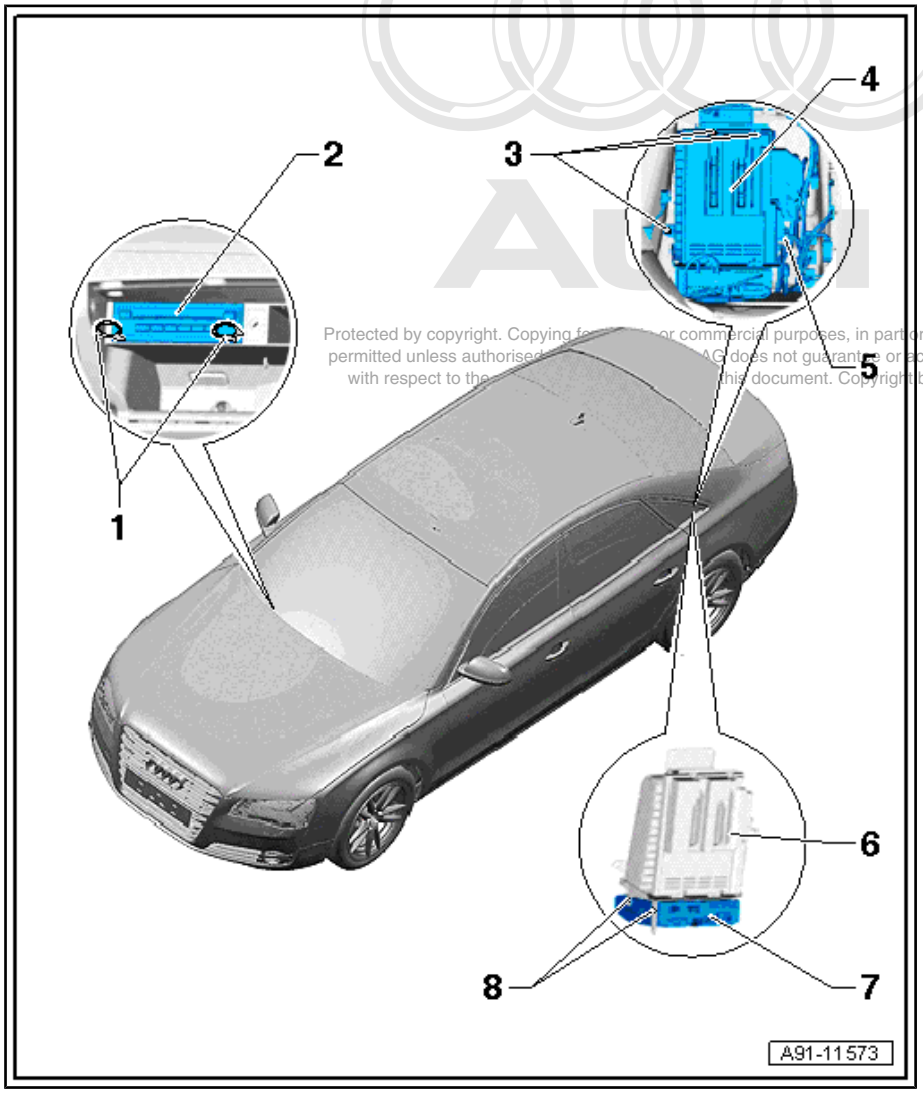

Protected by copyright. Copying for private or commercial purposes, in part or in whole, is not permitted unless authorised by AUDI AG. AUDI AG does not guarantee or accept any liability with respect to the accuracy of this document. Copyright by AUDI AG.

8.2.2 Overview of fitting locations - TV system, from model year 2014, excluding vehicles with high-voltage electrical system

1 - Radio release tool - T10057-

2 - DVD changer - R161-

- ❑ Pin assignment ⇒ page 98
- ❑ Removing and installing ⇒ page 98

3 - Nut

- ❑ 3x
- ❑ 4 Nm

4 - Bracket

5 - TV tuner - R78-

- ❑ Pin assignment ⇒ page 142
- ❑ Removing and installing ⇒ page 149

6 - Bolt

- ❑ 4x
- ❑ 4 Nm

7 - Bracket

8 - TV tuner - R78-

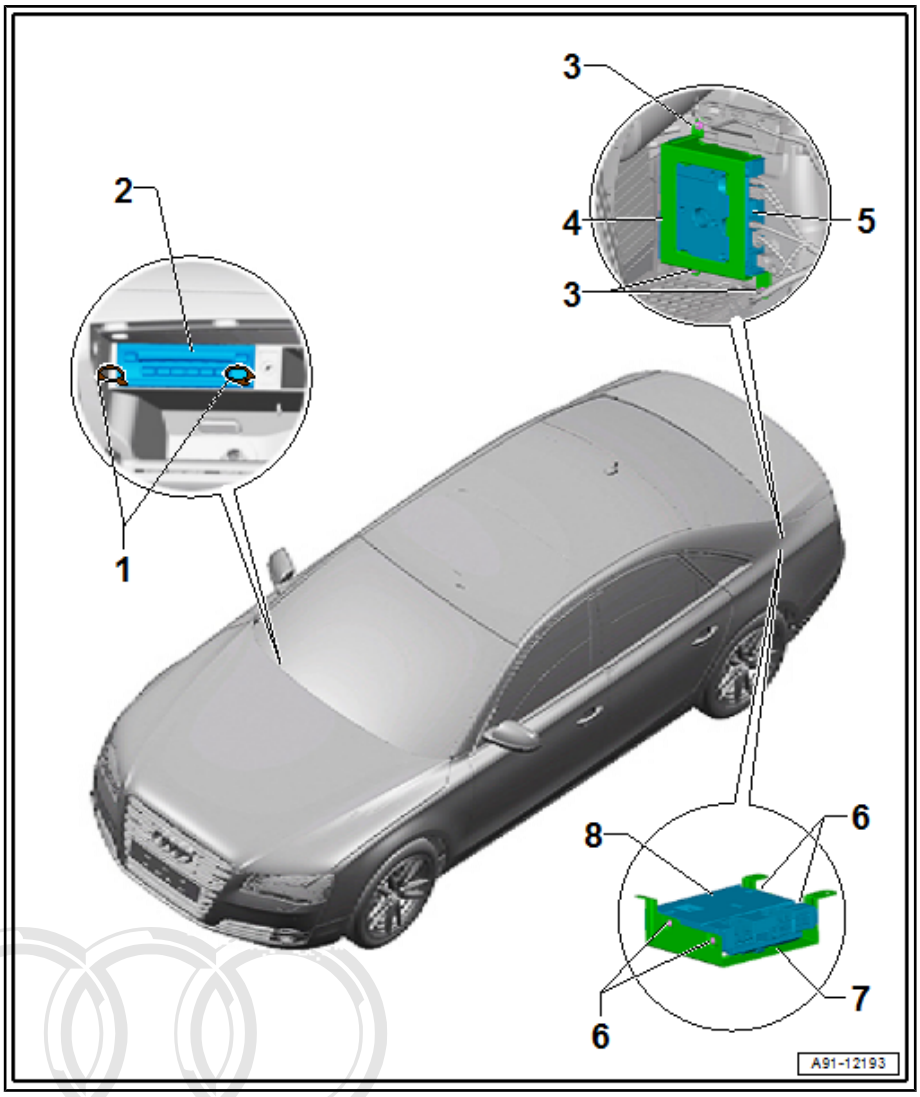

Protected by copyright. Copying for private or commercial purposes, in part or in whole, is not permitted unless authorised by AUDI AG. AUDI AG does not guarantee or accept any liability with respect to the correctness of information in this document. Copyright by AUDI AG.

8.2.3 Overview of fitting locations - TV system, Japan, up to model year 2013, including vehicles with high-voltage electrical system

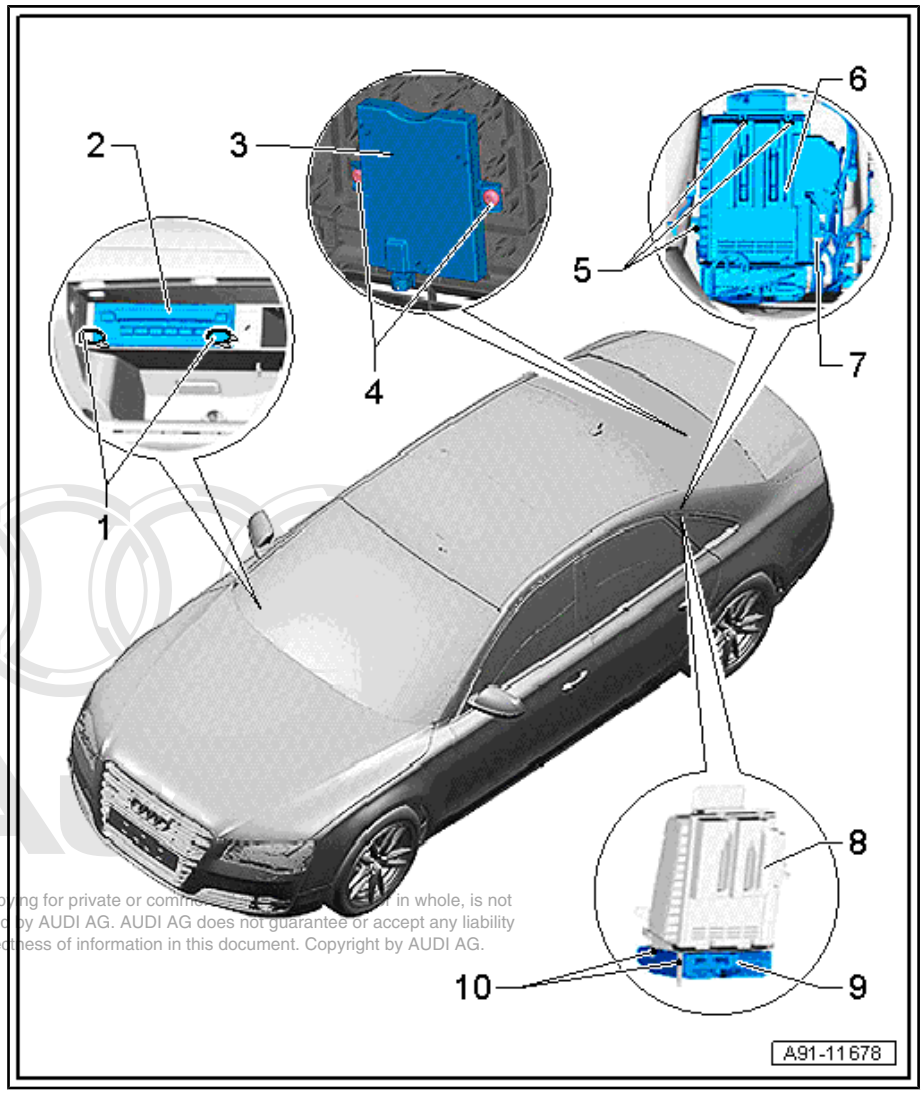

1 - Radio release tool - T10057-

2 - DVD changer - R161-

- ❑ Pin assignment ⇒ page 98
- ❑ Removing and installing ⇒ page 98

3 - TV card reader - R204-

- ❑ Removing and installing ⇒ page 150

4 - Bolt

- ❑ 2x
- ❑ 2 Nm

5 - Nut

- ❑ 3x
- ❑ 4 Nm

6 - Bracket

7 - Nut

- ❑ 4 Nm

8 - Bracket

9 - TV tuner - R78-

- ❑ Pin assignment (hybrid) ⇒ page 143
- ❑ Removing and installing ⇒ page 147

- Digital TV tuner (from model year 2012 onwards)

- ❑ Pin assignment ⇒ page 146
- ❑ Removing and installing ⇒ page 149

10 - Bolt

- ❑ 4x
- ❑ 4 Nm

Protected by copyright. Copying for private or commercial purposes, in whole or in part, is not permitted unless authorised by AUDI AG. AUDI AG does not guarantee or accept any liability with respect to the correctness of information in this document. Copyright by AUDI AG.

8.2.4 Overview of fitting locations - TV system, Japan, from model year 2014, excluding vehicles with high-voltage electrical system

1 - Radio release tool - T10057-

2 - DVD changer - R161-

- ❑ Pin assignment ⇒ page 98
- ❑ Removing and installing ⇒ page 98

3 - Nut

- ❑ 3x
- ❑ 4 Nm

4 - Bracket

5 - TV tuner - R78-

- ❑ Pin assignment ⇒ page 143
- ❑ Removing and installing ⇒ page 149

6 - Bolt

- ❑ 4x
- ❑ 4 Nm

7 - Bracket

8 - TV tuner - R78-

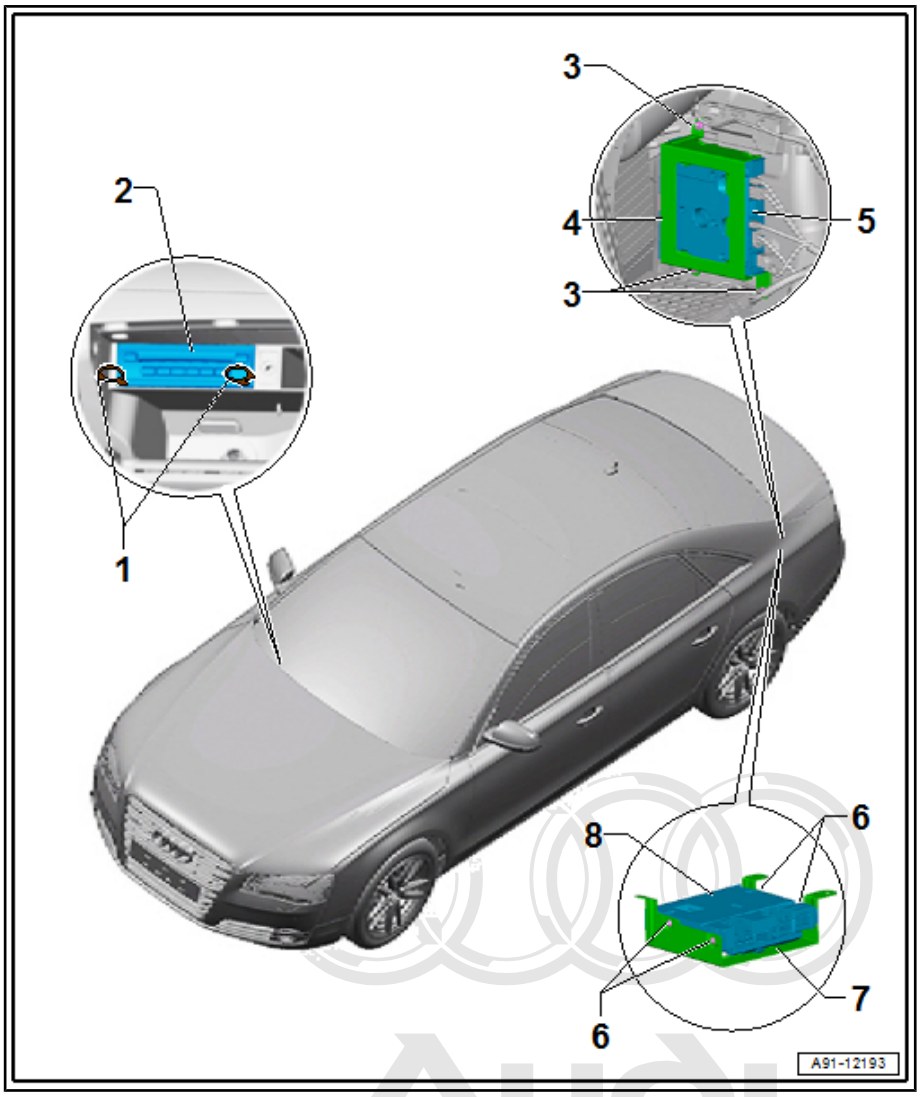

Protected by copyright. Copying for private or commercial purposes, in part or in whole, is not permitted unless authorised by AUDI AG. AUDI AG does not guarantee or accept any liability with respect to the correctness of information in this document. Copyright by AUDI AG.

8.3 Pin assignment

⇒ “8.3.1 Pin assignment for TV tuner R78 ”, page 142
⇒ “8.3.2 Pin assignment for TV tuner R78 , Japan”, page 143
⇒ “8.3.3 Pin assignment for digital TV tuner”, page 145
⇒ “8.3.4 Pin assignment for TV tuner, Japan”, page 146

8.3.1 Pin assignment for TV tuner - R78-

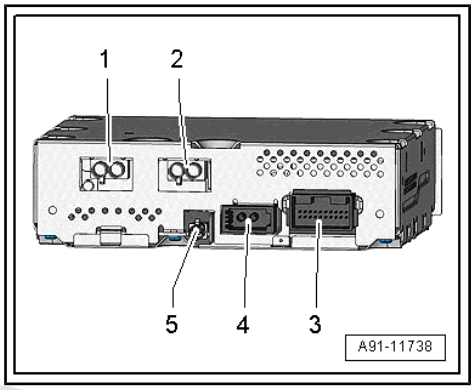

TV tuner - R78-

1 - Connection TV1/TV2, from aerial amplifier 2 - R111- / aerial amplifier 3 - R112-

2 - Connection TV3, from aerial amplifier 4 - R113-

3 - 20-pin connector - T20a-

4 - MOST bus

5 - FBAS output to control unit 1 for information electronics - J794- / DVD changer - R161-

Note

Contacts which are not listed are not used.

3 - 20-pin connector - T20a-

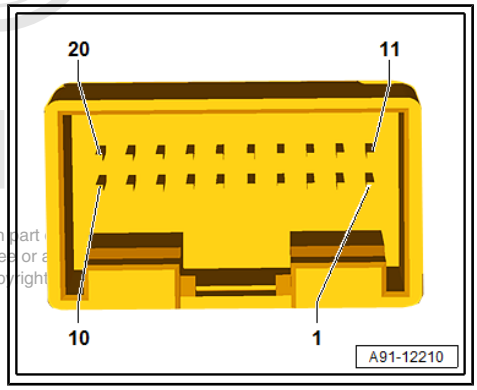

1 - Terminal 30

2 - Terminal 31

3 - Open circuit diagnostic lead

4 - Screen earth

5 - Video out (Rear Seat Entertainment system)

6 - Screen earth

7 - Audio out L (Rear Seat Entertainment system)

8 - Audio out R (Rear Seat Entertainment system)

9 - Screen earth

10 - Audio in L

11 - Audio in R

12 - Video in

13 - Screen earth

14 - Screen earth

15 - Screen earth

16 - Audio in L

17 - Audio in R

18 - Video in

19 - Screen earth

20 - I/D PIN

Protected by copyright. Copying for private or commercial purposes, in part or in whole, is not permitted unless authorised by AUDI AG. AUDI AG does not guarantee or assume any liability with respect to the correctness of information in this document. Copyright by AUDI AG.

4 - MOST bus

1 - Input

2 - Output

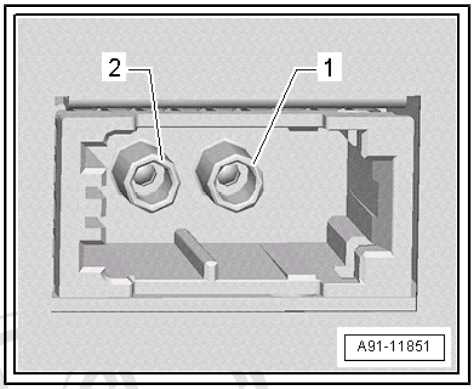

8.3.2 Pin assignment for TV tuner - R78- , Japan

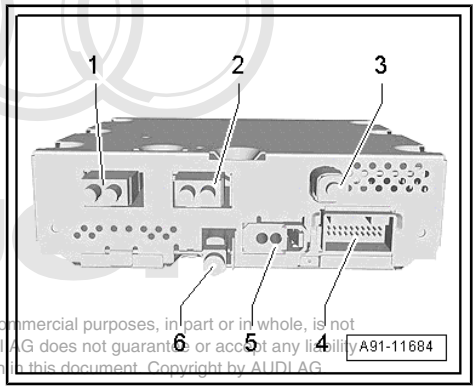

TV tuner - R78-

1 - Connection TV1/TV2, from aerial amplifier 2 - R111- / aerial amplifier 3 - R112-

2 - Connection TV3, from aerial amplifier 4 - R113-

3 - Connection (4-pin connector - T4ac-) for TV card reader - R204-

4 - 20-pin connector - T20a-

5 - MOST bus

6 - FBAS output to control unit 1 for information electronics - J794- / DVD changer - R161-

Protected by copyright. Copying for private or commercial purposes, in part or in whole, is not permitted unless authorised by AUDI AG. AUDI AG does not guarantee or accept any liability with respect to the correctness of information in this document. Copyright by AUDI AG.

Note

Contacts which are not listed are not used.

4 - 20-pin connector - T20a-

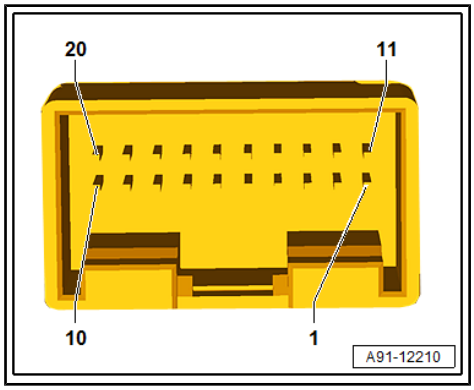

1 - Terminal 30
2 - Terminal 31
3 - Open circuit diagnostic lead
4 - Screen earth
5 - Video out (Rear Seat Entertainment system)
6 - Screen earth
7 - Audio out L (Rear Seat Entertainment system)
8 - Audio out R (Rear Seat Entertainment system)
9 - Screen earth
10 - Audio in L
11 - Audio in R
12 - Video in
13 - Screen earth
14 - Screen earth
15 - Screen earth
16 - Audio in L
17 - Audio in R
18 - Video in
19 - Screen earth
20 - I/D PIN

Protected by copyright. Copying for private or commercial purposes, in part or in whole, is not permitted unless authorised by AUDI AG. AUDI AG does not guarantee or accept any liability with respect to the correctness of information in this document. Copyright by AUDI AG.

5 - MOST bus

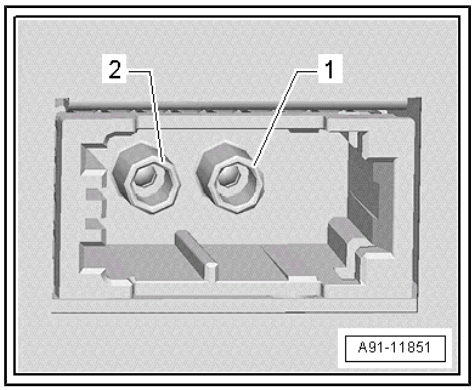

1 - Input
2 - Output

8.3.3 Pin assignment for digital TV tuner

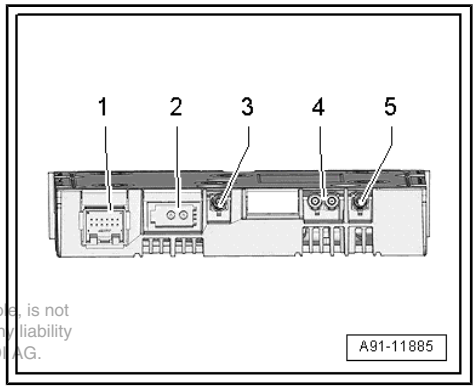

TV tuner - R78-

1 - 12-pin connector - T12av-

2 - MOST bus

3 - FBAS output to control unit 1 for information electronics - J794- / DVD changer - R161-

4 - Connection TV2/TV3, from aerial amplifier 3 - R112- / aerial amplifier 4 - R113-

5 - Connection TV1, from aerial amplifier 2 - R111-

Protected by copyright. Copying for private or commercial purposes, in part or in whole, is not permitted unless authorised by AUDI AG. AUDI AG does not guarantee or accept any liability with respect to the correctness of information in this document. Copyright by AUDI AG.

Note

Contacts which are not listed are not used.

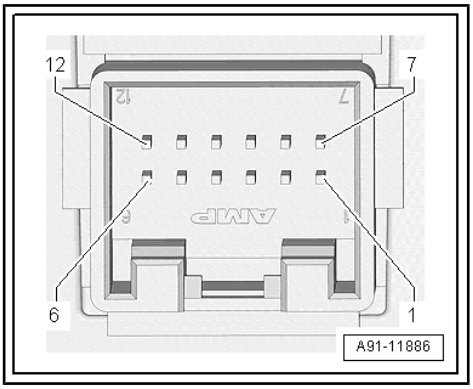

1 - 12-pin connector - T12av-

1 - Terminal 30

2 - Terminal 31

3 - Open circuit diagnostic lead

4 - Screen earth

5 - Video out (Rear Seat Entertainment system)

6 - Screen earth

7 - Audio out L (Rear Seat Entertainment system)

8 - Audio out R (Rear Seat Entertainment system)

9 - Screen earth

10 - Audio in L

11 - Audio in R

12 - Video in

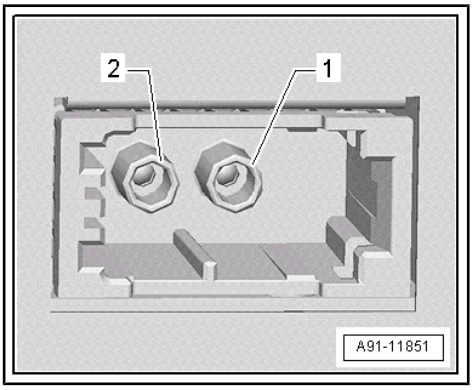

2 - MOST bus

1 - Input

2 - Output

8.3.4 Pin assignment for TV tuner, Japan

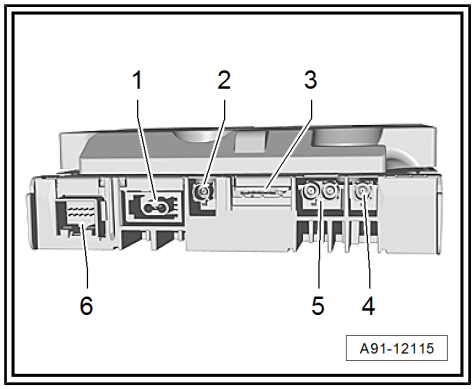

TV tuner - R78-

1 - MOST bus

2 - FBAS output to control unit 1 for information electronics - J794- / DVD changer - R161-

3 - SIM card reader

4 - Connection TV1, from aerial amplifier 2 - R111-

5 - Connection TV2/TV3, from aerial amplifier 3 - R112- / aerial amplifier 4 - R113-

6 - 12-pin connector - T12av-

Note

Contacts which are not listed are not used.

1 - MOST bus

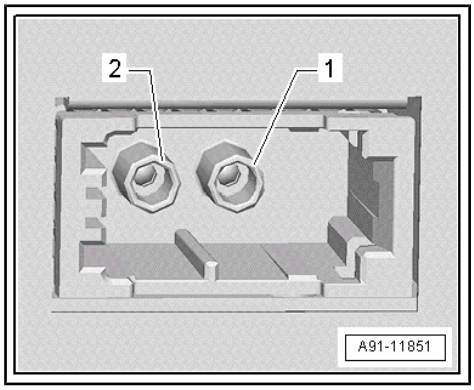

1 - Input

2 - Output

6 - 12-pin connector - T12av-

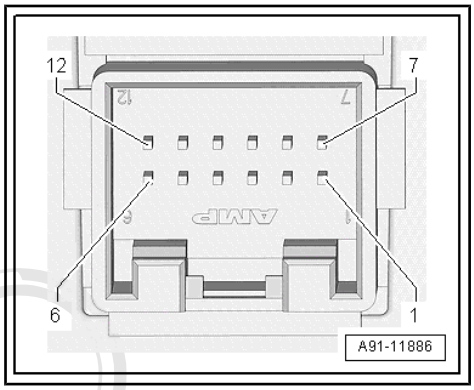

1 - Terminal 30

2 - Terminal 31

3 - Open circuit diagnostic lead

4 - Screen earth

5 - Video out (Rear Seat Entertainment system)

6 - Screen earth

7 - Audio out L (Rear Seat Entertainment system)

8 - Audio out R (Rear Seat Entertainment system)

9 - Screen earth

10 - Audio in L

11 - Audio in R

12 - Video in

Protected by copyright. Copying for private or commercial purposes, in part or in whole, is not permitted unless authorised by AUDI AG. AUDI AG does not guarantee or accept any liability with respect to the correctness of information in this document. Copyright by AUDI AG.

8.4 Removing and installing TV tuner

⇒ "8.4.1 Removing and installing TV tuner R78 , up to model year 2013, including vehicles with high-voltage electrical system", page 147

⇒ "8.4.2 Removing and installing TV tuner R78 , from model year 2014, excluding vehicles with high-voltage electrical system", page 149

8.4.1 Removing and installing TV tuner - R78- , up to model year 2013, including vehicles with high-voltage electrical system

The TV tuner - R78- -1- is located in the luggage compartment on the back panel (left-side).

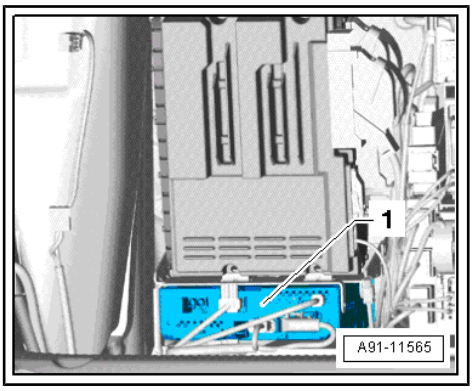

Special tools and workshop equipment required

♦ Protective cap for cable connector - VAS 6223/9-

Protected by copyright. Copying for private or commercial purposes, in part or in whole, is not permitted unless authorised by AUDI AG. AUDI AG does not guarantee or accept any liability with respect to the correctness of information in this document. Copyright by AUDI AG.

Note

If control unit is to be renewed, select the "Replace control unit" function for appropriate control unit in ⇒ Vehicle diagnostic tester.

– Switch off ignition and all electrical equipment and remove ignition key.

Removing

– Remove luggage compartment back panel trim ⇒ General body repairs, interior; Rep. gr. 70 ; Luggage compartment trim panels; Exploded view - luggage compartment side trim .

Bracket with sound amplifiers and TV tuner - R78- must be removed first.

– Release and unplug connectors on TV tuner - R78- .

– Fit protective cap for cable connector - VAS 6223/9- -1- onto MOST bus connector -2-.

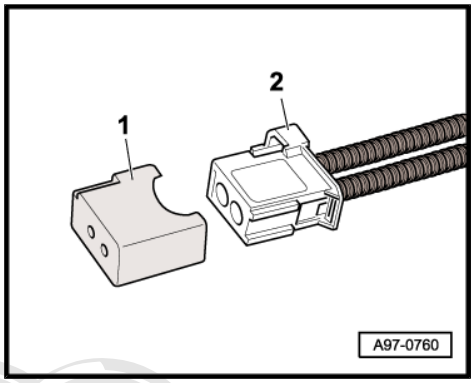

– Unscrew nuts -1- and -3- from bracket -2- and lift bracket with TV tuner - R78- into the luggage compartment.

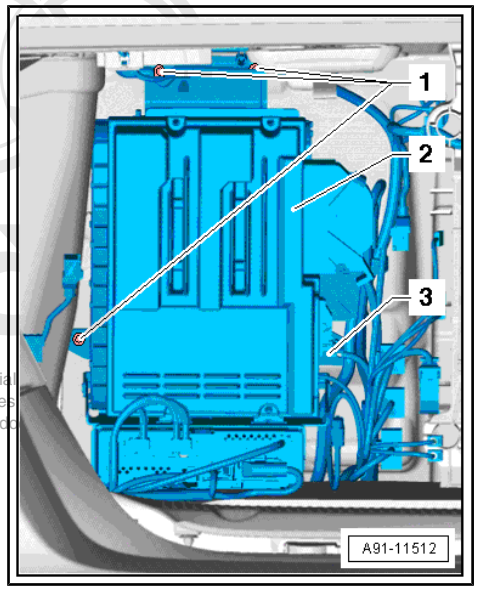

Protected by copyright. Copying for private or commercial
permitted unless authorised by AUDI AG. AUDI AG does
with respect to the correctness of information in this do

– Remove bolts -2- (right and left) from TV tuner - R78- -3-.

– Remove TV tuner - R78- -3- downwards -arrow- from bracket -1-.

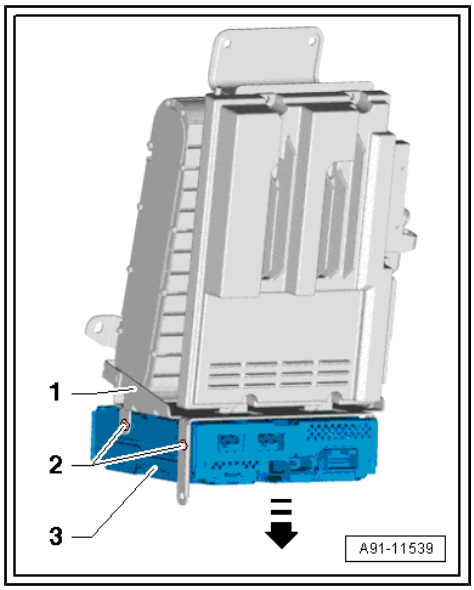

Installing

– Install in reverse sequence of removal.

Tightening torques

- ⇒ “8.2.1 Overview of fitting locations - TV system, up to model year 2013, including vehicles with high-voltage electrical system”, page 138
- ⇒ “8.2.3 Overview of fitting locations - TV system, Japan, up to model year 2013, including vehicles with high-voltage electrical system”, page 140

8.4.2 Removing and installing TV tuner - R78- , from model year 2014, excluding vehicles with high-voltage electrical system

The TV tuner - R78- -1- is located in the luggage compartment recess (left-side).

Item 2: Bracket for TV tuner - R78-

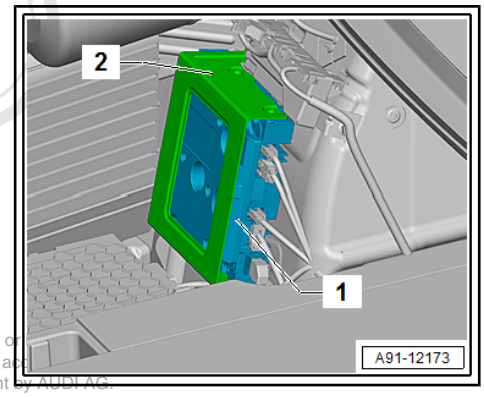

Protected by copyright. Copying for private or commercial purposes, in part or in whole, is not permitted unless authorised by AUDI AG. AUDI AG does not guarantee or assume any liability with respect to the correctness of information in this document. Copyright by AUDI AG.

Special tools and workshop equipment required

- Protective cap for cable connector - VAS 6223/9-

Note

If control unit is to be renewed, select the "Replace control unit" function for appropriate control unit in ⇒ Vehicle diagnostic tester.

– Switch off ignition and all electrical equipment and remove ignition key.

Removing

– Remove luggage compartment side trim (left-side) ⇒ General body repairs, interior; Rep. gr. 70 ; Luggage compartment trim panels; Overview of luggage compartment side trim .

Bracket and radio - R- must first be removed.

– Release and unplug connectors on TV tuner - R78- -1-.

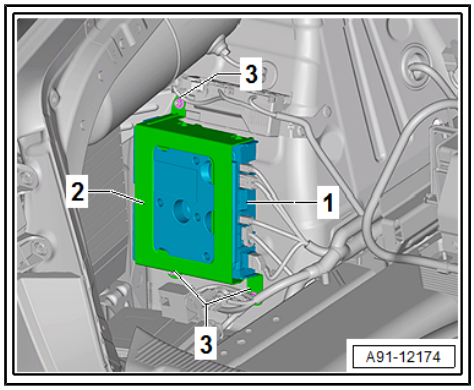

– Fit protective cap for cable connector - VAS 6223/9- -1- onto MOST bus connector -2-.

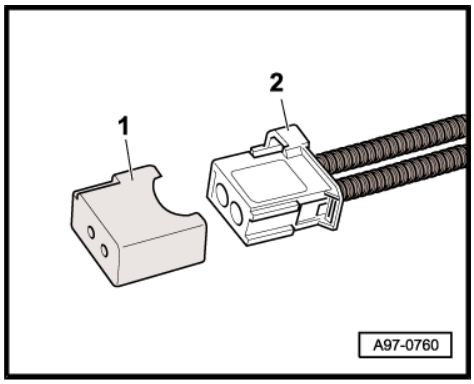

– Unscrew nuts -3- from bracket -2- and lift bracket with TV tuner - R78- into the luggage compartment.

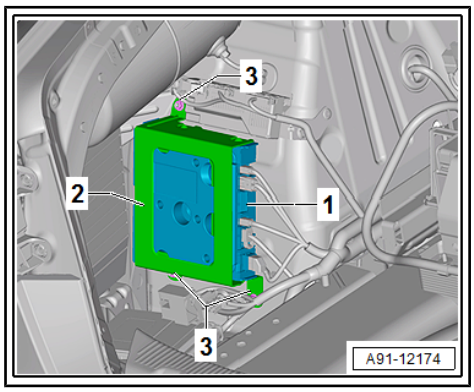

– Remove bolts -3- (right and left) from TV tuner - R78- -1-.

– Remove TV tuner - R78- -1- from bracket -2-.

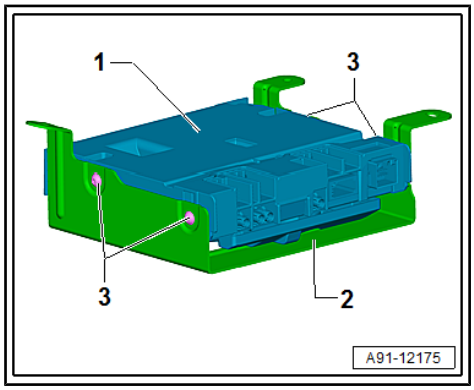

Installing

– Install in reverse sequence of removal.

Tightening torques

♦ ⇒ “8.2.2 Overview of fitting locations - TV system, from model year 2014, excluding vehicles with high-voltage electrical system”, page 139

♦ ⇒ “8.2.4 Overview of fitting locations - TV system, Japan, from model year 2014, excluding vehicles with high-voltage electrical system”, page 141

8.5 Removing and installing TV card reader

The TV card reader - R204- is located in the luggage compartment, on the luggage compartment back panel trim.

Protected by copyright. Copying for private or commercial purposes, in part or in whole, is not permitted unless authorised by AUDI AG. AUDI AG does not guarantee or accept any liability with respect to the correctness of information in this document. Copyright by AUDI AG.

– Switch off ignition and all electrical equipment and remove ignition key.

Removing

- Open luggage compartment.
- Remove chip card.
- Remove luggage compartment back panel trim ⇒ General body repairs, interior; Rep. gr. 70 ; Luggage compartment trim panels; Exploded view - luggage compartment side trim .
- Release and unplug connector at TV card reader - R204- .
- Unscrew bolts -2- and remove TV card reader - R204- -1- from luggage compartment back panel trim.

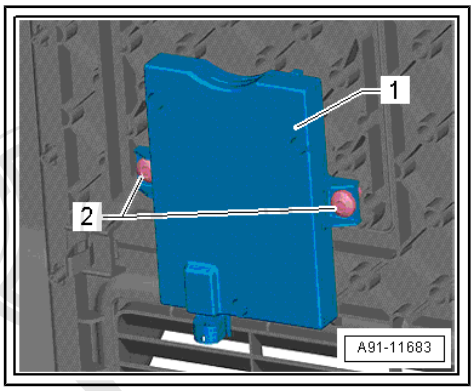

Installing

- Install in reverse sequence of removal.

Tightening torques

◆ ⇒ “8.2.3 Overview of fitting locations - TV system, Japan, up to model year 2013, including vehicles with high-voltage electrical system”, page 140

Protected by copyright. Copying for private or commercial purposes, in part or in whole, is not permitted unless authorised by AUDI AG. AUDI AG does not guarantee or accept any liability with respect to the correctness of information in this document. Copyright by AUDI AG.

9 Reversing camera system

⇒ “9.1 Layout - reversing camera system”, page 152

⇒ “9.2 Overview of fitting locations - reversing camera system”, page 154

⇒ “9.3 Removing and installing reversing camera R189 ”, page 155

⇒ “9.4 Calibrating reversing camera system”, page 156

⇒ “9.5 Removing and installing reversing camera system control unit J772 ”, page 162

⇒ “9.6 Connectors on reversing camera system control unit J772 ”, page 164

9.1 Layout - reversing camera system

The reversing camera system provides assistance to the driver when driving the vehicle backwards; the information about the prevailing traffic conditions behind the vehicle is supplied to the driver via the display unit for front information display and operating unit control unit - J685- .

The system will be switched on as soon as reverse gear is engaged. The system can be activated manually by operating the parking aid button - E266- in the centre console (optional).

The reversing camera system consists of the following components:

- Reversing camera - R189-
- Reversing camera system control unit - J772-
- Control unit 1 for information electronics - J794-
- Steering wheel with steering angle sender - G85-

As an option, other control units may also be installed.

Do not fit an additional number plate on vehicles equipped with reversing camera system as this will impair the function of the reversing camera system.

Fault finding is performed via the “Guided Fault Finding” ⇒ Vehicle diagnostic tester.

Protected by copyright. Copying for private or commercial purposes, in part or in whole, is not permitted unless authorised by AUDI AG. AUDI AG does not guarantee or accept any liability with respect to the correctness of information in this document. Copyright by AUDI AG.

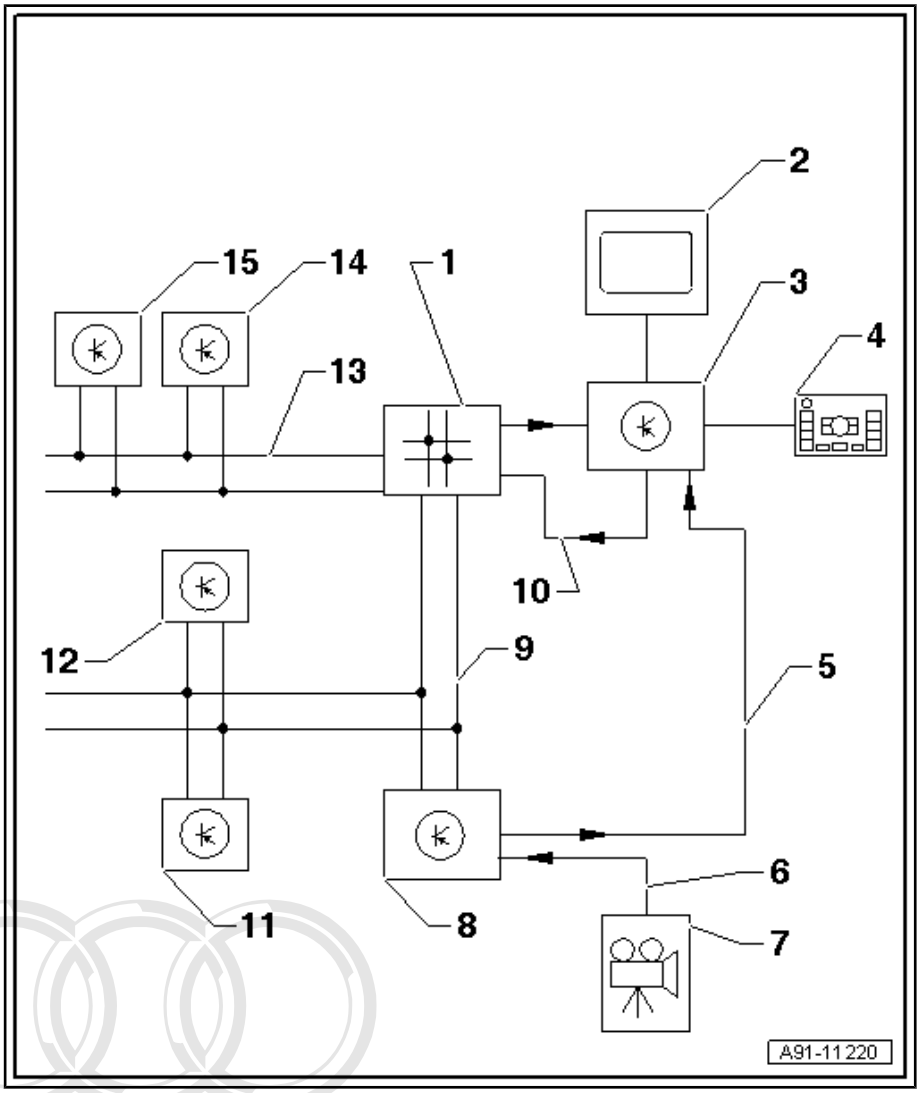

1 - Data bus diagnostic interface - J533- in luggage compartment on back panel (right-side)

2 - Display unit for front information display and operating unit control unit - J685- in dash panel (centre)

3 - Control unit 1 for information electronics - J794- in dash panel

4 - Multimedia system operating unit - E380- in centre console (front)

5 - FBAS wire from reversing camera system control unit - J772-

6 - FBAS wire from reversing camera - R189-

7 - Reversing camera - R189- in rear lid

8 - Reversing camera system control unit - J772- in luggage compartment on back panel (left-side)

9 - CAN bus (dash panel insert)

10 - MOST bus

11 - Parking aid control unit - J446- in luggage compartment on back panel (right-side)/in luggage compartment recess (right-side)

12 - Trailer detector control unit - J345- in luggage compartment on back panel (left-side)

13 - Powertrain CAN bus

14 - ABS control unit - J104- in engine compartment

15 - Steering angle sender - G85- on steering column at steering column electronics control unit - J527-

Protected by copyright. Copying for private or commercial purposes, in part or in whole, is not permitted unless authorised by AUDI AG. AUDI AG does not guarantee or accept any liability with respect to the correctness of information in this document. Copyright by AUDI AG.

9.2 Overview of fitting locations - reversing camera system

⇒ "9.2.1 Overview of fitting locations - reversing camera system, up to model year 2013, including vehicles with high-voltage electrical system", page 154

⇒ "9.2.2 Overview of fitting locations - reversing camera system, up to model year 2014, excluding vehicles with high-voltage electrical system", page 155

9.2.1 Overview of fitting locations - reversing camera system, up to model year 2013, including vehicles with high-voltage electrical system

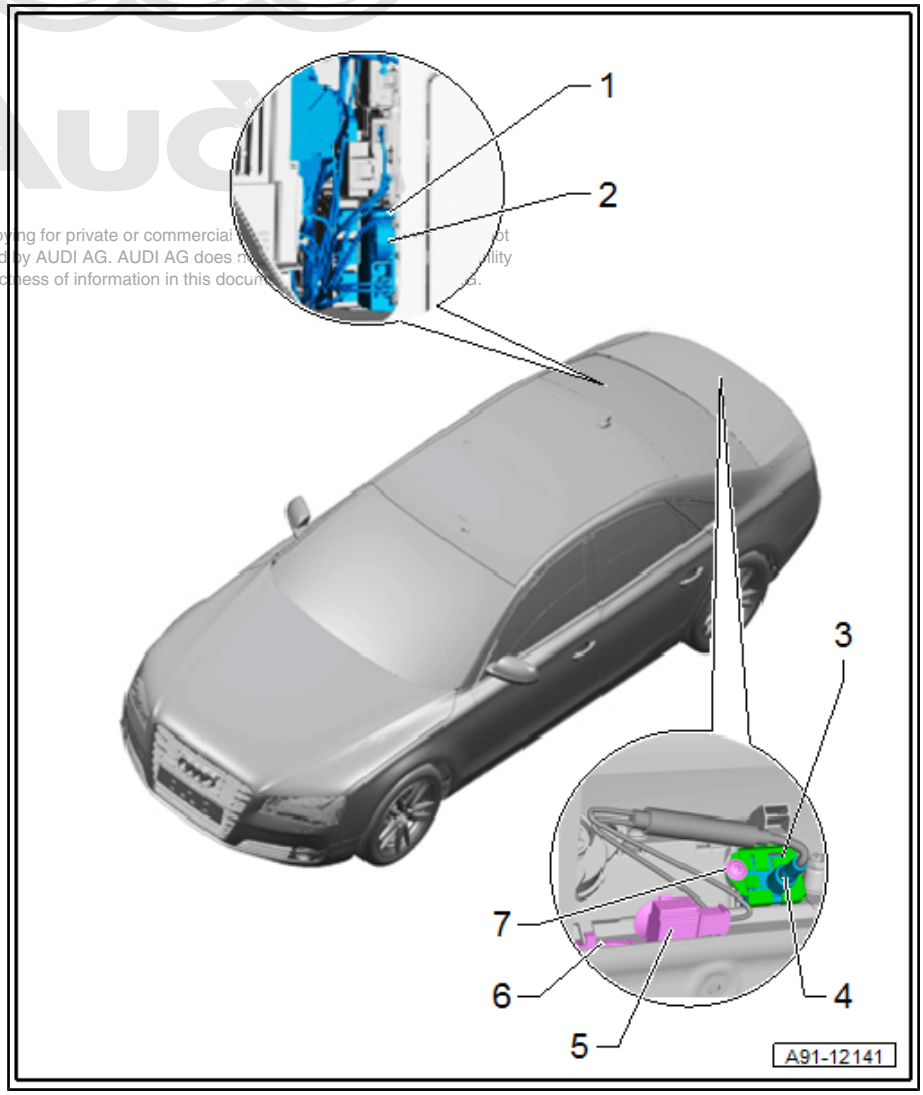

1 - Lug

2 - Reversing camera system control unit - J772-
- ❑ Pin assignment ⇒ page 164
- ❑ Removing and installing ⇒ page 162
- ❑ Calibration ⇒ page 156

3 - Retaining plate

4 - Reversing camera - R189-
- ❑ Removing and installing ⇒ page 155
- ❑ Calibration ⇒ page 156

5 - Connector
- ❑ For reversing camera - R189-

6 - Connector
- ❑ For reversing camera - R189-

7 - Bolt
- ❑ 2 Nm

Protected by copyright. Copying for private or commercial purposes, in part or in whole, is not permitted unless authorised by AUDI AG. AUDI AG does not guarantee or assume any liability with respect to the correctness of information in this document. Copyright by AUDI AG.

9.2.2 Overview of fitting locations - reversing camera system, up to model year 2014, excluding vehicles with high-voltage electrical system

1 - Connector

- ❑ For reversing camera - R189-

2 - Connector

- ❑ For reversing camera - R189-

3 - Bolt

- ❑ 2 Nm

4 - Retaining plate

5 - Reversing camera - R189-

- ❑ Removing and installing ⇒ page 155
- ❑ Calibration ⇒ page 156

6 - Nut

- ❑ 4 Nm

7 - Bracket

8 - Bracket

9 - Reversing camera system control unit - J772-

- ❑ Pin assignment ⇒ page 165
- ❑ Removing and installing ⇒ page 163
- ❑ Calibration ⇒ page 156

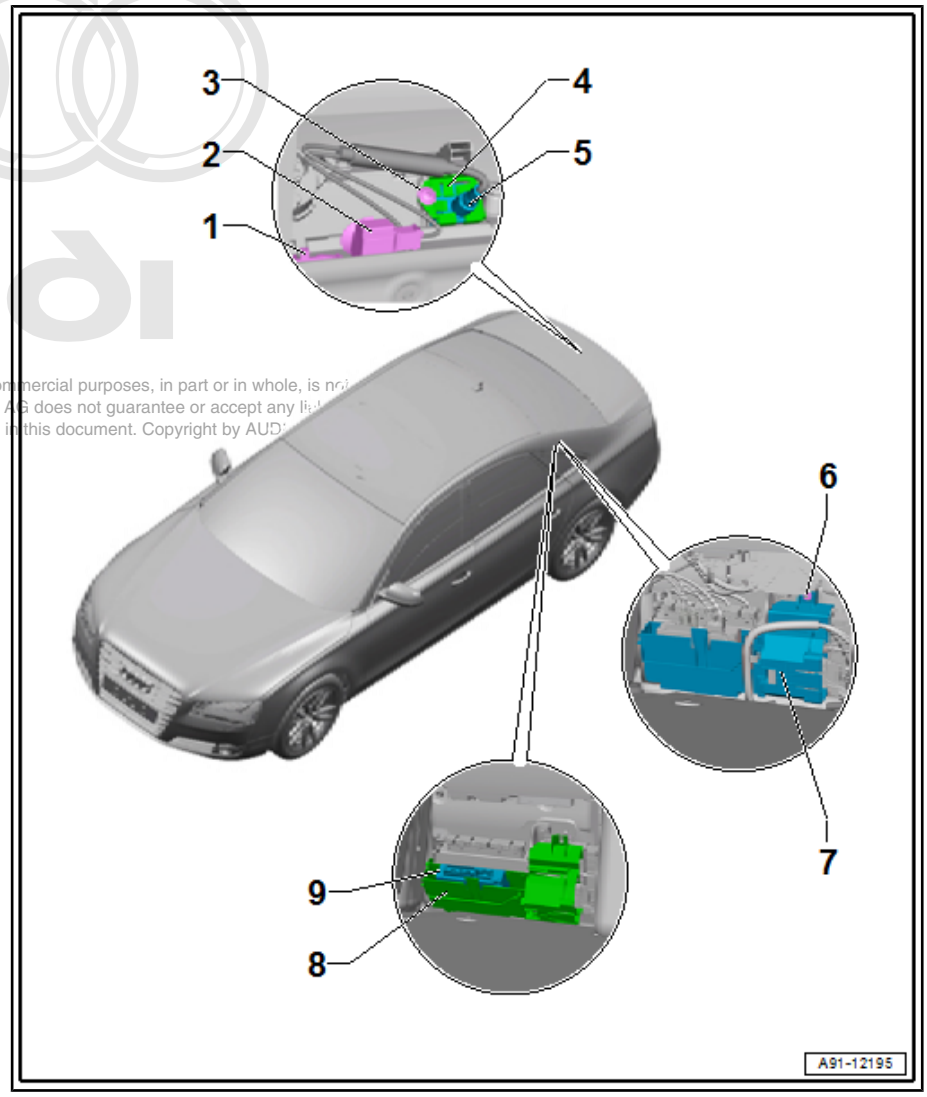

Protected by copyright. Copying for private or commercial purposes, in part or in whole, is not permitted unless authorised by AUDI AG. AUDI AG does not guarantee or accept any liability with respect to the correctness of information in this document. Copyright by AUDI AG.

9.3 Removing and installing reversing camera - R189-

Reversing camera - R189- is installed in handle in rear lid.

– Switch off ignition and all electrical equipment and remove ignition key.

Removing

Reversing camera - R189- is equipped with a trailing cable. Connectors to vehicle wiring harness are located in rear lid.

– Remove rear lid trim ⇒ General body repairs, interior; Rep. gr. 70 ; Luggage compartment trim panels; Overview of fitting locations - luggage compartment trim panels .

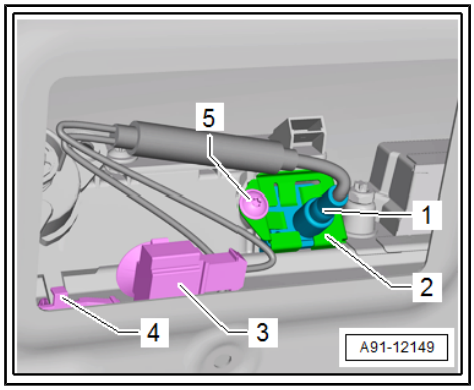

– Release and unplug connectors -3- and -4- in rear lid.
– Remove bolt -5-.
– Detach retaining plate -2-.
– Pull reversing camera - R189- -1- out of handle.

Installing

– Install in reverse sequence of removal.
– Close rear lid.
– Perform calibration.

Tightening torques

♦ ⇒ "9.2.1 Overview of fitting locations - reversing camera system, up to model year 2013, including vehicles with high-voltage electrical system", page 154

♦ ⇒ "9.2.2 Overview of fitting locations - reversing camera system, up to model year 2014, excluding vehicles with high-voltage electrical system", page 155

9.4 Calibrating reversing camera system

⇒ "9.4.1 Setting up and aligning calibration unit VAS 6350 ", page 156

⇒ "9.4.2 Calibrating reversing camera", page 158

9.4.1 Setting up and aligning calibration unit - VAS 6350-

After performing service work on the vehicle it may be necessary to re-calibrate the reversing camera system. This is required after:

♦ Removing and installing reversing camera - R189-
♦ Renewing reversing camera system control unit - J772-
♦ Performing accident repair work on rear lid
♦ Changes to wheel alignment on rear axle

Requirements for calibration

♦ Camera lens must be clean. Clean.
♦ Vehicle must be positioned on a firm and even surface.
♦ There must be sufficient space around the vehicle (at least 2 m).
♦ Parking brake must be activated.
♦ Steering wheel must be in centre position, wheels must be straight.
♦ All doors and the rear lid must be closed.
♦ There must not be anyone inside the vehicle.
♦ Vehicle must not be loaded (unladen weight).
♦ The battery charger must be connected.
♦ The ignition must be switched on.

Special tools and workshop equipment required

Protected by copyright. Copying for private or commercial purposes, in part or in whole, is not permitted unless authorised by AUDI AG. AUDI AG does not guarantee or accept any liability with respect to the correctness of information in this document. Copyright by AUDI AG.

- Calibration unit - VAS 6350-

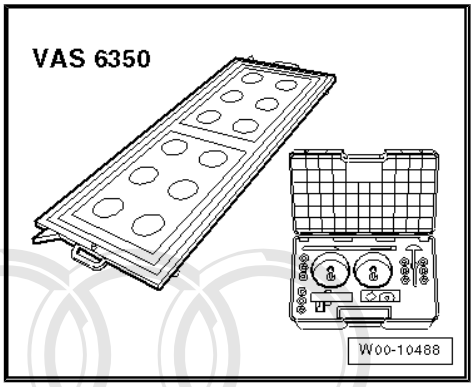

- ⇒ Vehicle diagnostic tester

The calibration unit - VAS 6350- consists of the following items:

- Wheel centre mounting - VAS 6350/1-
- Spacing laser - VAS 6350/2-
- Linear laser - VAS 6350/3-

Overview of calibration equipment - VAS 6350- when set up

Protected by copyright. Copying for private or commercial purposes, in part or in whole, is not permitted unless authorised by AUDI AG. AUDI AG does not guarantee or accept any liability with respect to the correctness of information in this document. Copyright by AUDI AG.

1 - Wheel centre mounting - VAS 6350/1-

2 - Wheel centre mounting - VAS 6350/1-

3 - Locating bracket (right-side)

- ❑ Mounting for spacing laser - VAS 6350/2-

4 - Plastic foot

- ❑ Three on underside of calibration platform
- ❑ Adjustable, for aligning horizontal position of calibration platform

5 - Linear laser - VAS 6350/3-

- ❑ On calibration platform
- ❑ Switching on and off ⇒ Owner's Manual

6 - Spacing laser - VAS 6350/2-

- ❑ On calibration platform
- ❑ Operating instructions ⇒ Owner's Manual

7 - Spirit level

- ❑ On calibration platform
- ❑ For checking horizontal position

8 - Locating bracket (left-side)

- ❑ Mounting for spacing laser - VAS 6350/2-

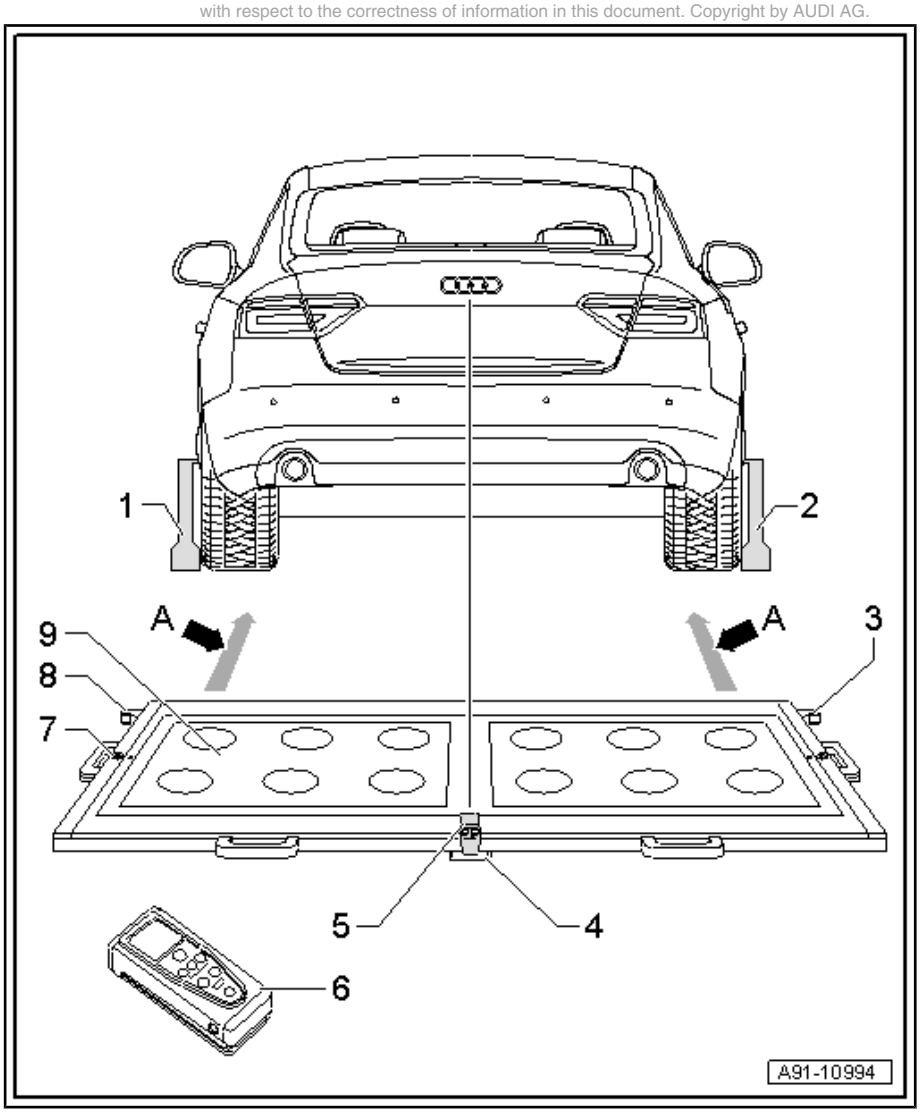

9 - Calibration platform

❑ -Dimension A- = 1.47 m - 1.90 m between locating brackets of calibration platform and wheel centre mountings - VAS 6350/1-

Aligning calibration platform

– Position calibration platform behind vehicle at a distance of 1.47 m - 1.90 m from rear wheels, refer to -dimension A- in overview ⇒ page 157 .

– Move calibration unit - VAS 6350- to a horizontal position.

– To do so, turn plastic feet beneath calibration platform to make air bubble in spirit level move exactly to centre of display -arrow-.

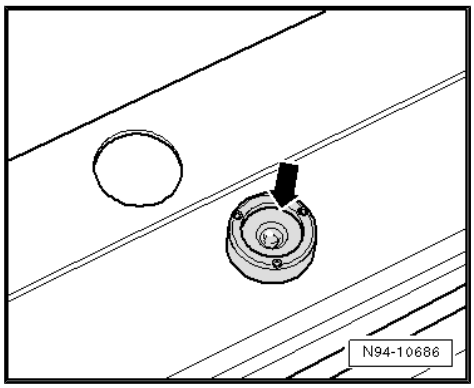

> ⚠ WARNING
>
> *Make sure no light is reflected on calibration platform.*
>
> *Reflected light impairs the view of the reversing camera - R189- and therefore it may be impossible to perform calibration.*

– Switch on linear laser - VAS 6350/3- -1- on calibration platform and align entire calibration unit - VAS 6350- so that laser beam shines onto centre of Audi rings on rear of vehicle.

– Check whether Audi rings on back of vehicle are central. Re-adjust laser beam accordingly.

Continue by calibrating reversing camera - R189- ⇒ page 158 .

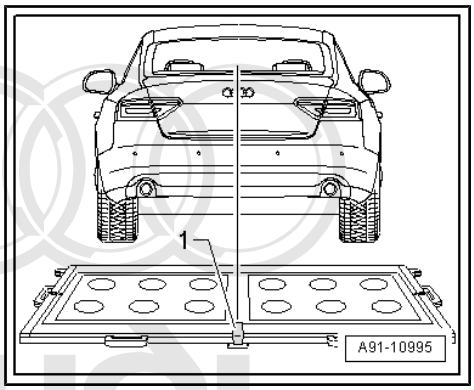

9.4.2 Calibrating reversing camera

– Ensure requirements are met ⇒ page 156 .

– Connect ⇒ Vehicle diagnostic tester.

Protected by copyright. Copying for private or commercial purposes, in part or in whole, is not permitted unless authorised by AUDI AG. AUDI AG does not guarantee or accept any liability with respect to the correctness of information in this document. Copyright by AUDI AG.

Fit wheel centre mounting - VAS 6350/1- :

– Check bolt circle of wheels.

– Prepare wheel centre mountings - VAS 6350/1- as required. Use spacers.

– To do so, secure three wheel bolt adapters to each wheel centre mounting - VAS 6350/1- to match the hole circle.

– Position paddles on both wheel centre mountings - VAS 6350/1- and secure each paddle with clamping bolt.

– Fit wheel centre mountings - VAS 6350/1- onto wheel bolts on rear wheels.

The wheel centre mountings - VAS 6350/1- are kept in position by the O-rings in the adapters.

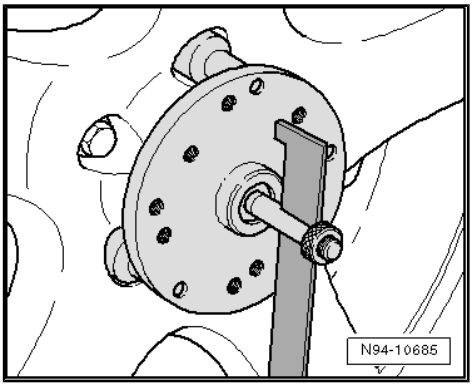

Note

When fitting the wheel centre mountings - VAS 6350/1- onto the wheels, make sure that they are not mounted on any "anti-theft" wheel bolts that might be installed.

– Use clamping bolts to adjust paddles so that they are free to move just slightly above the ground. Make sure the paddles can move freely.

– Set up and align calibration unit - VAS 6350- ⇒ page 156 .

Measuring gap:

– Switch on spacing laser - VAS 6350/2- .

The following display will appear:

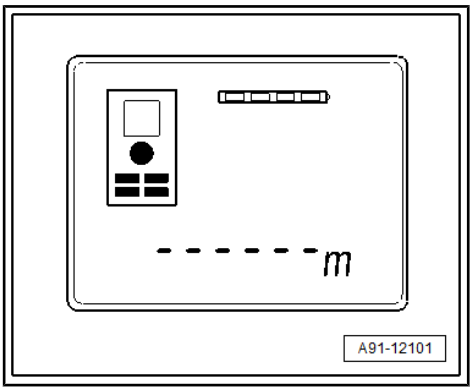

The display will show how the spacing laser - VAS 6350/2- should be positioned. Press the appropriate key.

1 - Position at front edge

2 - Position at rear edge

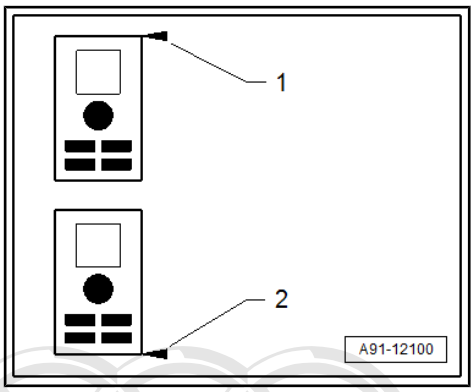

Protected by copyright. Copying for private or commercial purposes, in part or in whole, is not permitted unless authorised by AUDI AG. AUDI AG does not guarantee or accept any liability with respect to the correctness of information in this document. Copyright by AUDI AG.

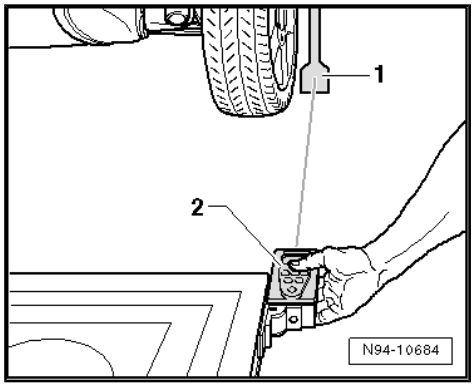

– Hold spacing laser - VAS 6350/2- -2- on one side of calibration platform so that it is flush at bracket (position rear edge against bracket). Spacing laser - VAS 6350/2- -2- must make firm contact with bracket.

– Briefly press the measurement button.

The laser will switch on.

– Make sure that laser beam from spacing laser - VAS 6350/2- -2- hits lower, larger part of paddle -1-.

If this is not the case, position of paddles must be corrected accordingly using clamping bolts on wheel centre mounting - VAS 6350/1- .

– Hold spacing laser - VAS 6350/2- in locating bracket on calibration unit - VAS 6350- with one hand while laser beam is visible on paddle.

– Now press measurement button briefly to measure distance.

– Note down the measured value.

– Perform same measuring procedure for rear wheel on other side of calibration unit - VAS 6350- .

Measured distance value must be identical on both sides.

If values are not identical:

– Adjust calibration unit - VAS 6350- until values on both sides are identical.

When adjusting calibration unit - VAS 6350- , make sure that linear laser - VAS 6350/3- on calibration unit - VAS 6350- still hits centre of Audi rings and spirit level display also remains in the centre. Correct if necessary.

Protected by copyright. Copying for private or commercial purposes, in part or in whole, is not permitted unless authorised by AUDI AG. AUDI AG does not guarantee or accept any liability with respect to the correctness of information in this document. Copyright by AUDI AG.

Measuring dimension -H-:

– Measure height of calibration unit - VAS 6350- : dimension -H- (top edge of platform - floor).

Ensure that spacing laser - VAS 6350/2- is correctly adjusted (position at front edge).

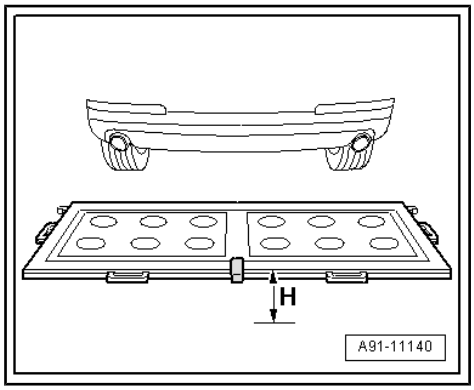

The display will show how the spacing laser - VAS 6350/2- should be positioned. Press the appropriate key.

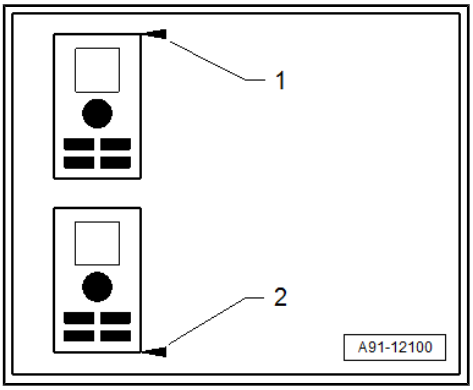

1 - Position at front edge

2 - Position at rear edge

Now enter measured distance value and height in millimetres in ⇒ Vehicle diagnostic tester.

Performing calibration

⇒ Vehicle diagnostic tester is connected.

– Select `Diagnosis` mode and start diagnosis.

– Select `Test plan` tab.

– Select `Own test` then the following options one after the other:

- Body
- Electrical system
- 01 - Self-diagnosis compatible systems
- 6C - Reversing camera system/J772
- 6C - Reversing camera system control unit, functions
- 6C - Calibration (Rep. gr. 91)

Further assistance is given by ⇒ Vehicle diagnostic tester during calibration procedure.

WARNING

Make sure no light is reflected on calibration platform.

Reflected light impairs the view of the reversing camera - R189- and therefore it may be impossible to perform calibration.

Protected by copyright. Copying for private or commercial purposes, in part or in whole, is not permitted unless authorised by AUDI AG. AUDI AG does not guarantee or accept any liability with respect to the correctness of information in this document. Copyright by AUDI AG.

9.5 Removing and installing reversing camera system control unit - J772-

⇒ “9.5.1 Removing and installing reversing camera system control unit J772 , up to model year 2013, including vehicles with high-voltage electrical system”, page 162

⇒ “9.5.2 Removing and installing reversing camera system control unit J772 , from model year 2014, excluding vehicles with high-voltage electrical system”, page 163

9.5.1 Removing and installing reversing camera system control unit - J772- , up to model year 2013, including vehicles with high-voltage electrical system

Protected by copyright. Copying for private or commercial purposes, in part or in whole, is not permitted unless authorised by AUDI AG. AUDI AG does not guarantee or accept any liability with respect to the correctness of information in this document. Copyright by AUDI AG.

The reversing camera system control unit - J772- -1- is located in the luggage compartment on the back panel (left-side).

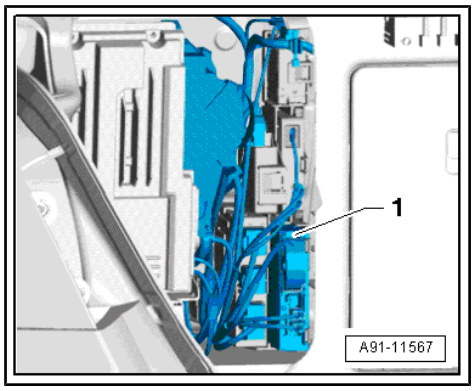

Note

If control unit is to be renewed, select the “Replace control unit” function for appropriate control unit in ⇒ Vehicle diagnostic tester.

– Switch off ignition and all electrical equipment and remove ignition key.

Removing

– Remove luggage compartment back panel trim ⇒ General body repairs, interior; Rep. gr. 70 ; Luggage compartment trim panels; Exploded view - luggage compartment side trim .

The reversing camera system control unit - J772- -1- is only wedged in the bracket.

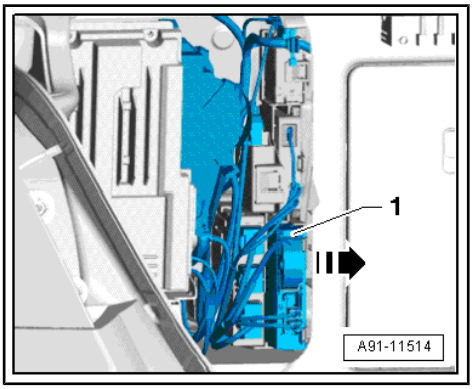

High-voltage vehicles only

Installing the high-voltage battery (hybrid battery unit - AX1-) in the luggage compartment restricts the installation space around the reversing camera system control unit - J772- . The hybrid battery unit - AX1- in the luggage compartment must be moved back and placed on the rails - T40275- first.

– Observe warning instructions for work on the high-voltage system ⇒ Electrical system; Rep. gr. 93 ; General warning instructions for work on the high-voltage system .

– Perform steps for removal of hybrid battery unit - AX1- to the point where it can be set down in the luggage compartment ⇒ Electrical system; Rep. gr. 93 ; High-voltage battery unit; Exploded view - high-voltage battery .

All vehicles

– Release and unplug connectors at reversing camera system control unit - J772- -1-.

– Use a small screwdriver to press retainers -arrow- towards right side and pull reversing camera system control unit - J772- out of bracket.

Protected by copyright. Copying for private or commercial purposes, in part or in whole, is not permitted unless authorised by AUDI AG. AUDI AG does not guarantee or accept any liability with respect to the correctness of information in this document. Copyright by AUDI AG.

Installing

– Installation is carried out in reverse sequence; note the following:

High-voltage vehicles only

– Observe warning instructions for work on the high-voltage system ⇒ Electrical system; Rep. gr. 93 ; General warning instructions for work on the high-voltage system .

– Install hybrid battery unit - AX1- ⇒ Electrical system; Rep. gr. 93 ; High-voltage battery unit; Exploded view - high-voltage battery .

All vehicles

– Perform calibration ⇒ page 156 .

9.5.2 Removing and installing reversing camera system control unit - J772- , from model year 2014, excluding vehicles with high-voltage electrical system

The reversing camera system control unit - J772- -1- is located in the luggage compartment on the back panel (left-side).

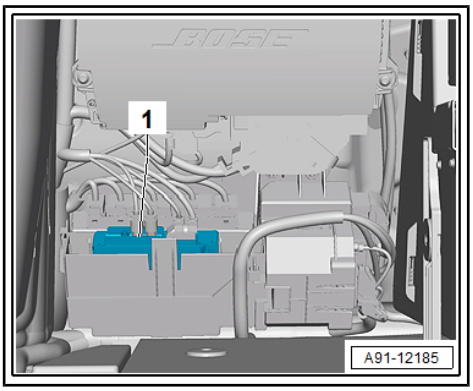

Note

If control unit is to be renewed, select the "Replace control unit" function for appropriate control unit in ⇒ Vehicle diagnostic tester.

– Switch off ignition and all electrical equipment and remove ignition key.

Removing

– Remove luggage compartment back panel trim ⇒ General body repairs, interior; Rep. gr. 70 ; Luggage compartment trim panels; Exploded view - luggage compartment side trim .

The reversing camera system control unit - J772- -1- is only wedged in the bracket.

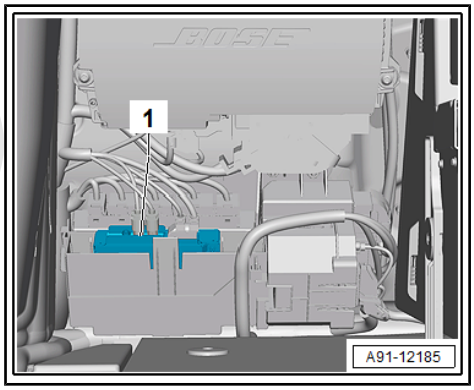

– Push catch using a small screwdriver or hand and pull reversing camera system control unit - J772- -1- out of bracket -2-.

Subject to copyright. Copying for private or commercial purposes, in part or in whole, is not permitted unless authorised by AUDI AG. AUDI AG does not guarantee or accept any liability with respect to the correctness of information in this document. Copyright by AUDI AG.

– Release and unplug connectors at reversing camera system control unit - J772- -1-.

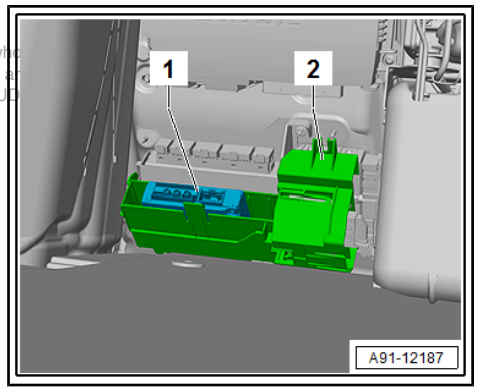

Installing

– Installation is carried out in reverse sequence; note the following:

– Perform calibration ⇒ page 156 .

9.6 Connectors on reversing camera system control unit - J772-

⇒ “9.6.1 Pin assignment for reversing camera system control unit J772 , up to model year 2013”, page 164

⇒ “9.6.2 Pin assignment for reversing camera system control unit J772 , from model year 2014”, page 165

9.6.1 Pin assignment for reversing camera system control unit - J772- , up to model year 2013

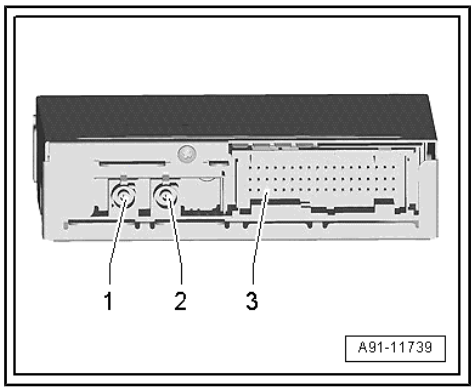

Reversing camera system control unit - J772-

1 - FBAS input from reversing camera - R189-

2 - FBAS output to control unit 1 for information electronics - J794-

3 - 54-pin connector - T54a-

Note

Contacts which are not listed are not used.

3 - 54-pin connector - T54a-

39 - CAN bus Low, dash panel insert

40 - CAN bus High, dash panel insert

43 - Terminal 30

44 - Terminal 31

47 - Terminal 31 to reversing camera - R189-

48 - Voltage supply for reversing camera - R189-

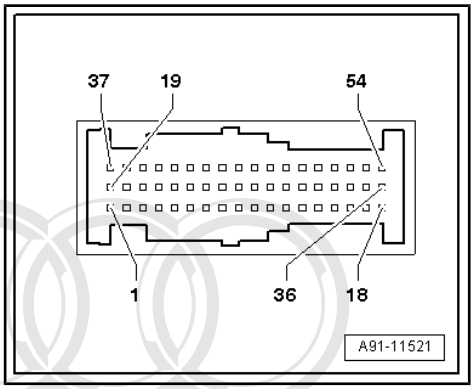

9.6.2 Pin assignment for reversing camera system control unit - J772- , from model year 2014

Reversing camera system control unit - J772-

1 - 20-pin connector - T20k-

2 - FBAS output to control unit 1 for information electronics - J794-

3 - FBAS input from reversing camera - R189-

4 - Not used

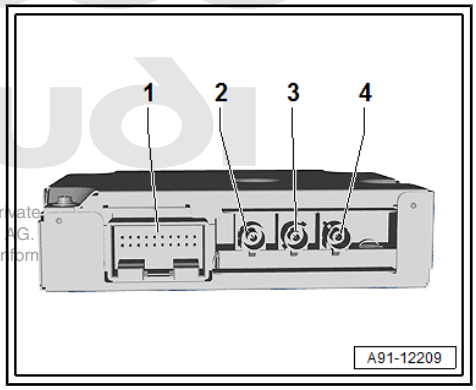

Protected by copyright. Copying for private
permitted unless authorised by AUDI AG.
No representations and correctness of inform

Note

Contacts which are not listed are not used.

1 - 20-pin connector - T20k-

9 - Voltage supply for reversing camera - R189-

10 - Terminal 30

11 - CAN bus Low, dash panel insert

12 - CAN bus High, dash panel insert

19 - Terminal 31 to reversing camera - R189-

20 - Terminal 31

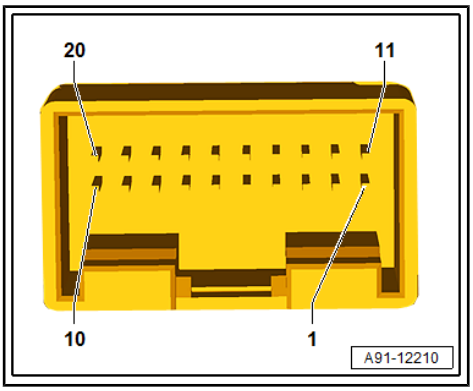

10 Multi-function steering wheel

⇒ “10.1 Layout - multi-function steering wheel”, page 166

⇒ “10.2 Exploded view - multi-function steering wheel”, page 166

⇒ “10.3 Removing and installing multifunction buttons in steering wheel E441 / E440 ”, page 167

⇒ “10.4 Removing and installing tiptronic switches in steering wheel E439 / E438 ”, page 170

10.1 Layout - multi-function steering wheel

Buttons are integrated in the steering wheel in order to make the infotainment, telephone and navigation systems easier to use. On vehicles with tiptronic, rocker switches are also fitted on the right and left side of the steering wheel.

The multi-function steering wheel control unit - J453- (in the right-side button) reads out the button information and transfers it to the steering column electronics control unit - J527- via the LIN data bus. From the steering column electronics control unit - J527- the information is transferred to the individual components via the CAN bus (convenience) and the data bus diagnostic interface - J533- .

Fault finding is performed via the “Guided Fault Finding” using ⇒ Vehicle diagnostic tester.

10.2 Exploded view - multi-function steering wheel

Protected by copyright. Copying for private or commercial purposes, in part or in whole, is not permitted unless authorised by AUDI AG. AUDI AG does not guarantee or accept any liability with respect to the correctness of information in this document. Copyright by AUDI AG.

1 - Tiptronic switch in steering wheel to shift down - E439-

- ❑ Removing and installing ⇒ page 170

2 - 4-spoke steering wheel

3 - Tiptronic switch in steering wheel to shift up - E438-

- ❑ Removing and installing ⇒ page 170

4 - Bolt

- ❑ 2x
- ❑ 1.2 Nm

5 - Multifunction buttons on right in steering wheel - E441-

- ❑ Removing and installing ⇒ page 167

6 - Trim panel

7 - Multifunction buttons on left in steering wheel - E440-

- ❑ Removing and installing ⇒ page 167

8 - Bolt

- ❑ 4x
- ❑ 1.2 Nm

Protected by copyright. Copying for private or commercial purposes, in part or in whole, is not permitted unless authorised by AUDI AG. AUDI AG does not guarantee or accept any liability with respect to the correctness of information in this document. Copyright by AUDI AG.

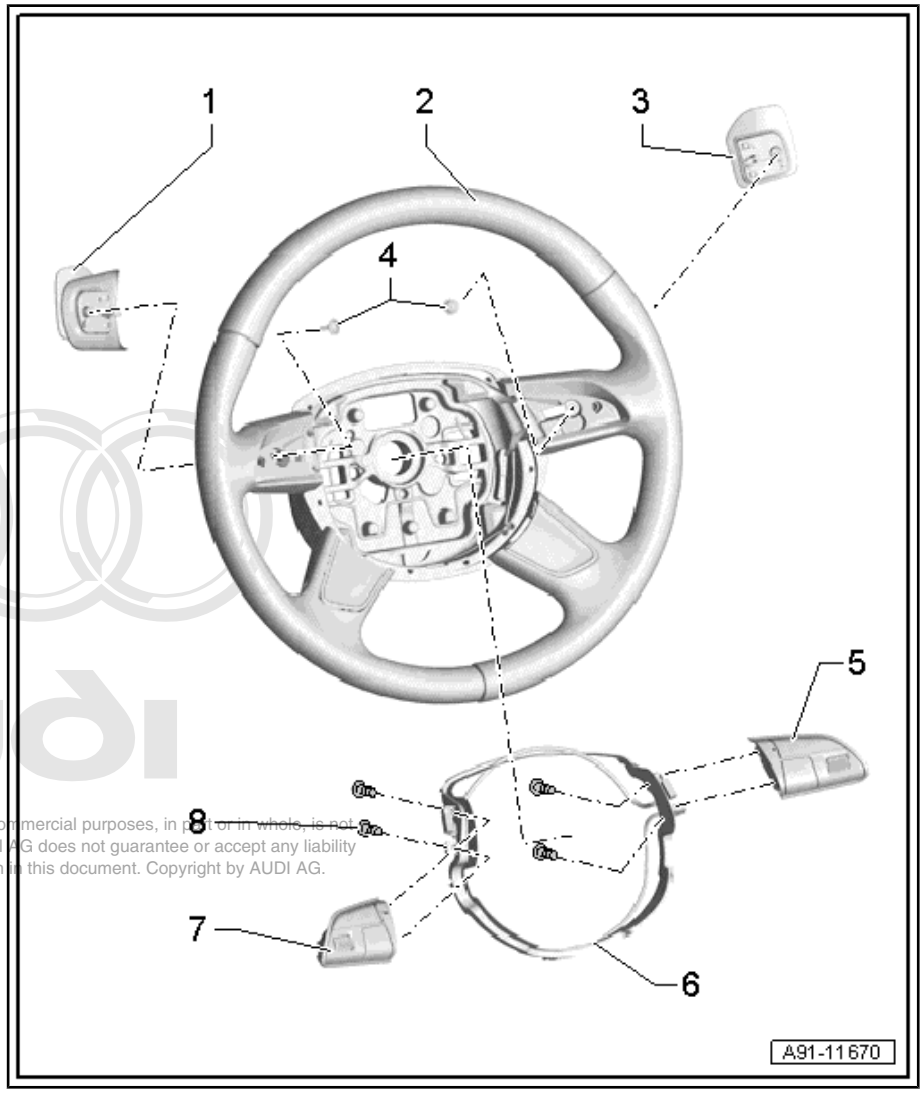

10.3 Removing and installing multifunction buttons in steering wheel -E441- / -E440-

Special tools and workshop equipment required

- ♦ Removal wedge - 3409-

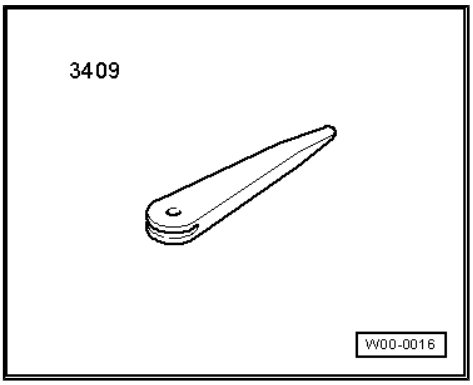

The multifunction buttons -2- are bolted to the trim panel -1-. The trim panel -1- is secured on the steering wheel together with the multifunction buttons -2-. Each multifunction button -2- has an extra retainer -3-.

When removing, make sure to loosen trim panel -1- by hand first (approx. 5 mm) and then disengage retainers -3- for multifunction buttons -2- using removal wedge - 3409- and finally pull off trim panel -1- together with multifunction buttons -2-.

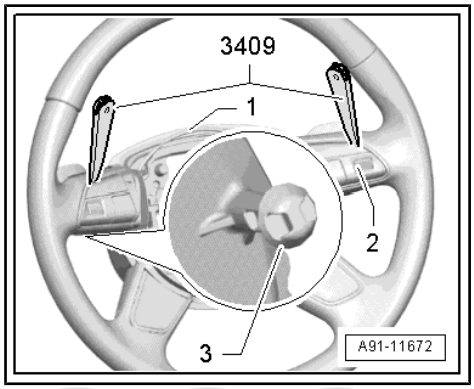

Retainers for trim panel

1 - Trim panel

Arrows - retainers

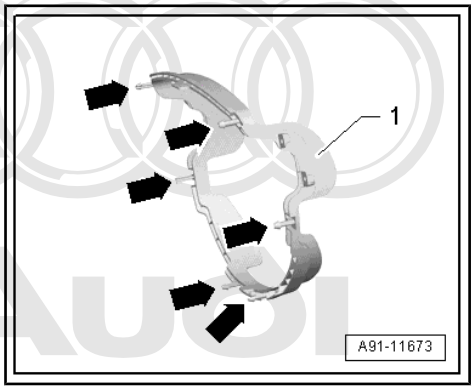

Protected by copyright. Copying for private or commercial purposes, in part or in whole, is not permitted unless authorised by AUDI AG. AUDI AG does not guarantee or accept any liability with respect to the correctness of information in this document. Copyright by AUDI AG.

Retainer for multifunction buttons

1 - Multifunction button

2 - Retainer

– Switch off ignition and all electrical equipment and remove ignition key.

Removing

– Remove driver airbag ⇒ General body repairs, interior; Rep. gr. 69 ; Airbag (driver side); Exploded view - airbag (driver side) .

– Take connecting wires out of their guides in steering wheel.

– Slightly loosen trim panel -2- together with multifunction buttons -arrows- by hand and pull it out of steering wheel -1- (by approx. 5 mm).

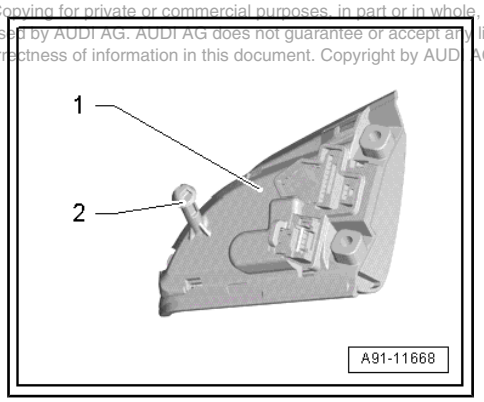

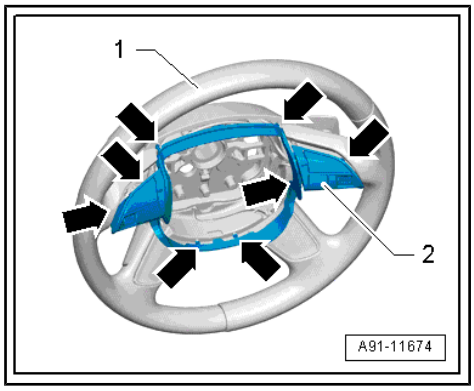

– Disengage multi-function buttons -2- in area of retainers -3- using removal wedge - 3409- . Apply removal wedge - 3409- as shown in illustration.

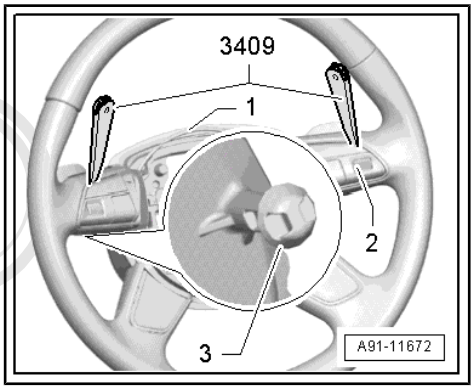

– At the same time, pay attention to connectors leading to tiptronic switches -2-.

– Release and unplug connector -2- at multifunction buttons.

– Detach trim panel together with multifunction buttons from steering wheel.

The multifunction buttons are bolted to the trim panel.

– Release and unplug connector on multifunction button.

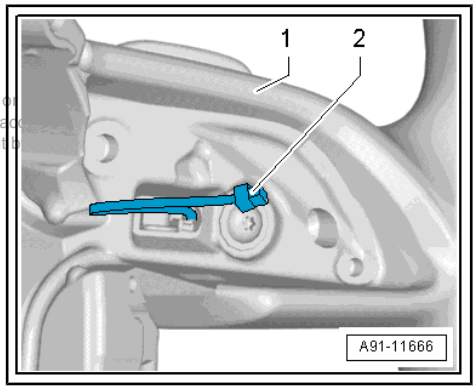

Protected by copyright. Copying for private or commercial purposes, in part or in whole, is not permitted unless authorised by AUDI AG. AUDI AG does not guarantee or accept any liability with respect to the correctness of information in this document. Copyright by AUDI AG.

– Remove bolts -3- and press multifunction button -2- out of trim panel -1-.

The additional wiring on the multifunction button (right-side) remains attached to the multifunction button.

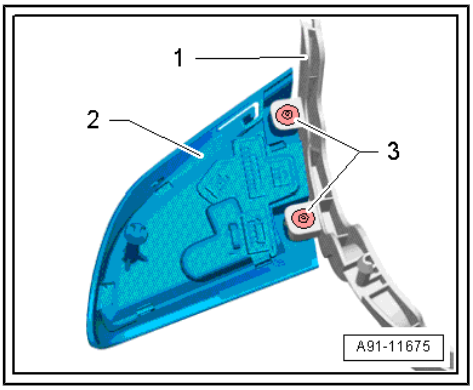

Installing

– Installation is carried out in reverse sequence; note the following:

– Position trim panel on steering wheel with multifunction buttons fitted.

– Ensure connecting wiring -2- for tiptronic switches is routed as shown in illustration.

– Route remaining connecting wiring, including connectors, through guides in steering wheel.

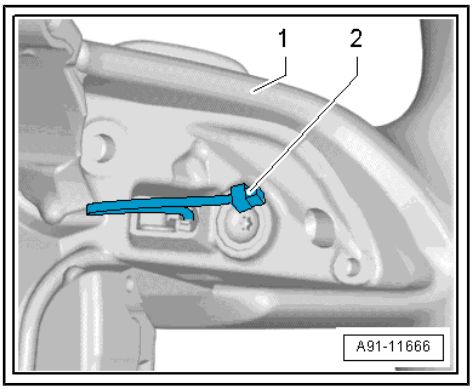

– Push trim panel -2- together with multifunction buttons onto steering wheel -1- until they engage properly.

– Finally, check again that wiring in steering wheel is correctly routed.

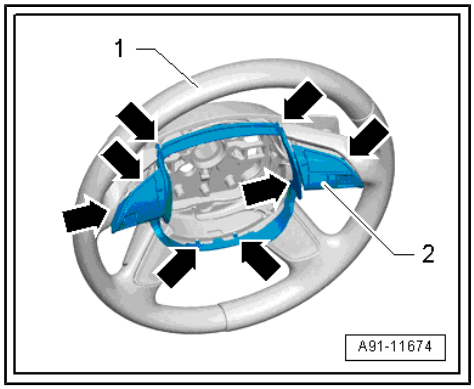

Tightening torques

◆ ⇒ “10.2 Exploded view - multi-function steering wheel”, page 166

10.4 Removing and installing tiptronic switches in steering wheel -E439- / -E438-

– Switch off ignition and all electrical equipment and remove ignition key.

Removing

– Remove trim panel with multifunction buttons ⇒ page 167 .

– Remove bolt -2- on steering wheel -1- and detach tiptronic switch -3- with connecting wire towards rear.

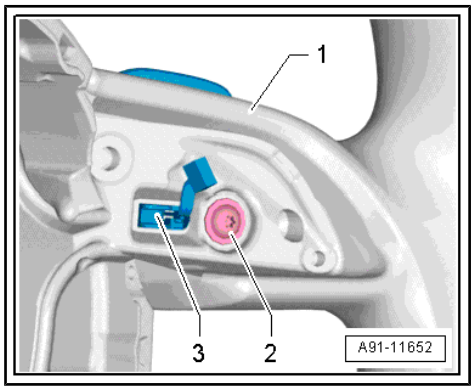

Installing

– Install in reverse sequence of removal.

Protected by copyright. Copying for private or commercial purposes, in part or in whole, is not permitted unless authorised by AUDI AG. AUDI AG does not guarantee or accept any liability with respect to the correctness of information in this document. Copyright by AUDI AG.

– Note position of connecting wire -2- to multifunction button.

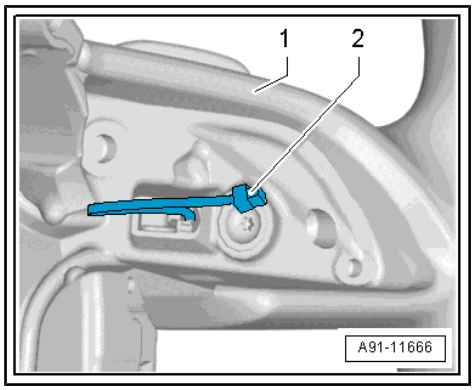

Tightening torques

◆ ⇒ “10.2 Exploded view - multi-function steering wheel”, page 166

11 Voice control system

⇒ “11.1 Layout - voice control system”, page 171

⇒ “11.2 Removing and installing voice control system”, page 172

11.1 Layout - voice control system

The voice control system enables voice operation of the telephone, infotainment and navigation systems.

Functions can be conveniently operated by simple voice commands. The system is activated via the talk button on the multi-function steering wheel.

The voice control system is integrated in the control unit 1 for information electronics - J794- .

Fault finding is performed via the “Guided Fault Finding” ⇒ Vehicle diagnostic tester.

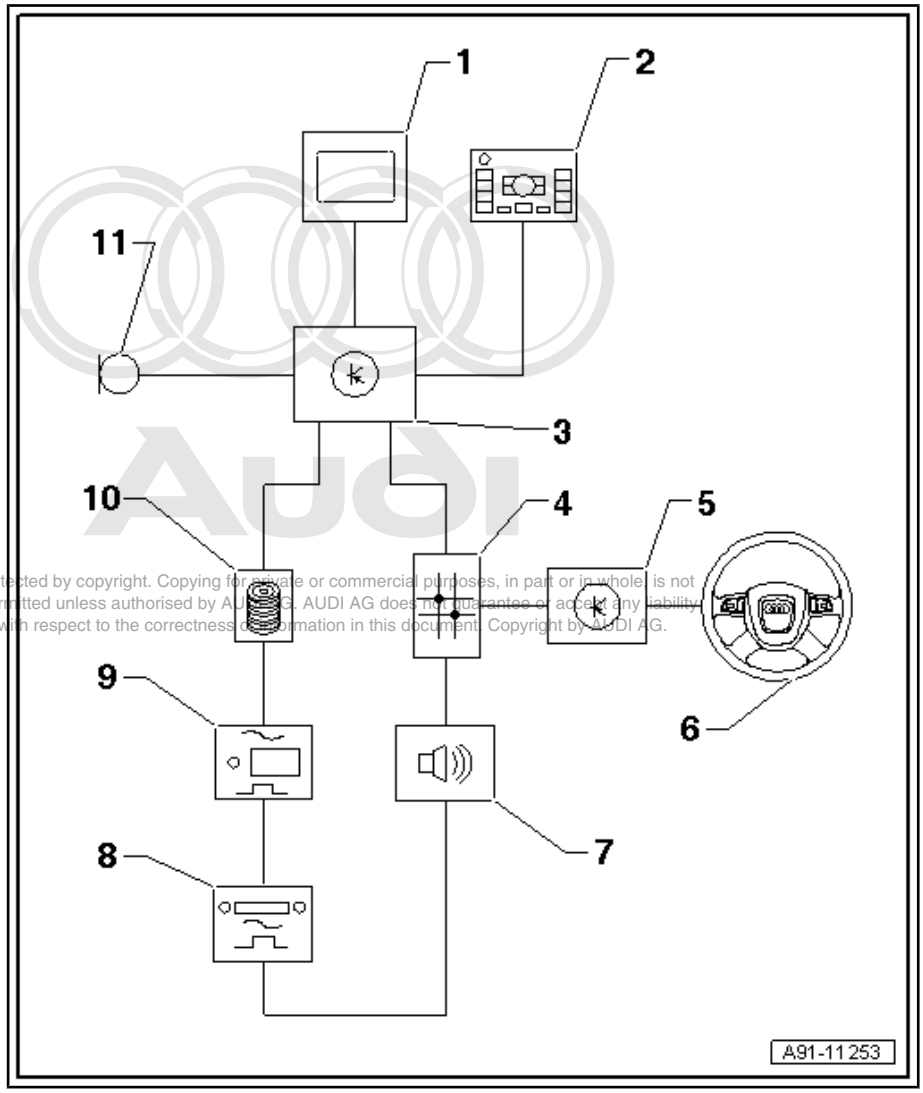

Protected by copyright. Copying for private or commercial purposes, in part or in whole, is not permitted unless authorised by AUDI AG. AUDI AG does not guarantee or accept any liability with respect to the correctness of information in this document. Copyright by AUDI AG.

1 - Display unit for front information display and operating unit control unit - J685-

- ❑ In dash panel (centre)

2 - Multimedia system operating unit - E380-

- ❑ In front centre console

3 - Control unit 1 for information electronics - J794-

- ❑ In dash panel
- ❑ Pin assignment ⇒ page 24
- ❑ Removing and installing ⇒ page 14

4 - Data bus diagnostic interface - J533-

- ❑ In luggage compartment on back panel (right-side)

5 - Steering column electronics control unit - J527-

- ❑ On steering column at steering column switch

6 - Multi-function steering wheel

- ❑ Removing and installing buttons ⇒ page 167

7 - Digital sound package control unit - J525-

- ❑ In luggage compartment on back panel (left-side)

8 - Radio - R-

- ❑ in luggage compartment on back panel (right-side)/in luggage compartment recess (left-side)

9 - TV tuner - R78-

- ❑ in luggage compartment on back panel (left-side)/in luggage compartment recess (left-side)

10 - DVD changer - R161-

- ❑ In glove box

11 - Microphone unit in front roof module - R164-

- ❑ See ⇒ page 107

11.2 Removing and installing voice control system

The reproduction, distribution and utilization of this document for commercial purposes, in part or in whole, is not permitted unless authorized by AUDI AG. AUDI AG does not guarantee or accept any liability with respect to the correctness of information in this document. Copyright by AUDI AG.

The voice control system is part of the control unit 1 for information electronics - J794- in the dash panel. It cannot be renewed separately.

In the event of a defect, the control unit 1 for information electronics - J794- must be renewed.

Note

If control unit is to be renewed, select the "Replace control unit" function for appropriate control unit in ⇒ Vehicle diagnostic tester.

– Switch off ignition and all electrical equipment and remove ignition key.

Removing

– Remove control unit 1 for information electronics - J794- ⇒ page 14 .

Installing

– Install control unit 1 for information electronics - J794- ⇒ page 14 .

Perform following functional check:

– Switch on radio - R- .

– Briefly press the talk button on the multi-function steering wheel.

A "BEEP" tone should sound; this indicates that the speech dialogue system is activated.

– Say the command "HELP".

Since the radio - R- is activated, the speech dialogue system should respond with "Commands for the radio are ...".

Depending on the equipment, you can to switch to other functions:

– If the vehicle is equipped with a telephone, say "TELEPHONE".

The speech dialogue system switches to the telephone mode.

– Press talk button for approx. 1 second.

The speech dialogue system responds with "Cancel" and is deactivated.

12 Connection for external audio sources

⇒ “12.1 Layout - external audio sources”, page 173

⇒ “12.2 Connectors on connection for external multimedia devices”, page 174

⇒ “12.3 Removing and installing connection for external audio sources R199 ”, page 175

12.1 Layout - external audio sources

Connections for external multimedia devices include:

- Connection for external audio sources - R199- (front)
- Connection 2 for external audio sources - R231- (rear), (on vehicles with Rear Seat Entertainment system)

The connection for external audio sources - R199- is part of the control unit 1 for information electronics - J794- .

Interface -1- is located in centre console storage compartment (front).

The connection 2 for external audio sources - R231- is part of the control unit 2 for information electronics - J829- .

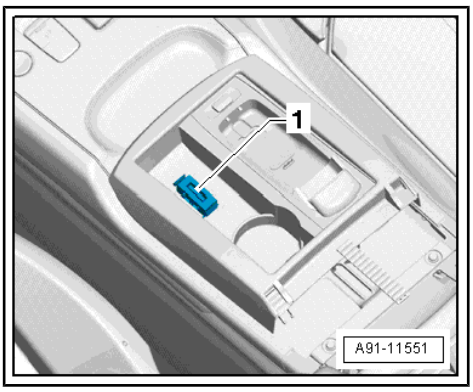

The interface -1- is located in the rear centre armrest storage compartment.

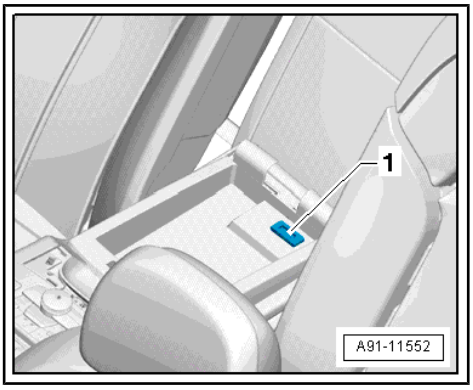

The following external audio sources can be connected to connection for external audio sources - R199- / connection 2 for external audio sources - R231- :

Protected by copyright. Copying for private or commercial purposes, in part or in whole, is not permitted unless authorised by AUDI AG. AUDI AG does not guarantee or accept any liability with respect to the correctness of information in this document. Copyright by AUDI AG.

- iPod
- MP3 player
- USB stick

Appropriate adapter cables are required ⇒ Owner's Manual .

Fault finding is performed via the “Guided Fault Finding” ⇒ Vehicle diagnostic tester.

12.2 Connectors on connection for external multimedia devices

⇒ “12.2.1 Pin assignment for connection for external audio sources R199 ”, page 174

⇒ “12.2.2 Pin assignment for connection 2 for external audio sources R231 ”, page 175

12.2.1 Pin assignment for connection for external audio sources - R199-

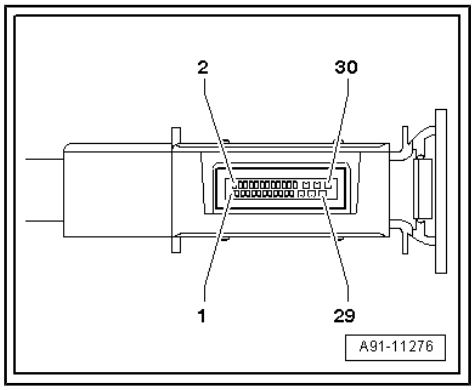

Note

Contacts which are not listed are not used.

30-pin connector - T30b-

All pins are connected to the control unit 1 for information electronics - J794- .

1 - NF in, left-side (low frequency)

2 - NF in, right-side (low frequency)

3 - Low frequency earth

4 - NF in, screen earth (low frequency)

13 - iPod data

14 - iPod data

16 - iPod detected

17 - D (+)

18 - D (–)

21 - Detect

22 - Earth

24 - FBAS wire (–)

25 - USB (earth)

27 - FBAS wire (+)

28 - USB (+5V)

Protected by copyright. Copying for private or commercial purposes, in part or in whole, is not permitted unless authorised by AUDI AG. AUDI AG does not guarantee or accept any liability with respect to the correctness of information in this document. Copyright by AUDI AG.

12.2.2 Pin assignment for connection 2 for external audio sources - R231-

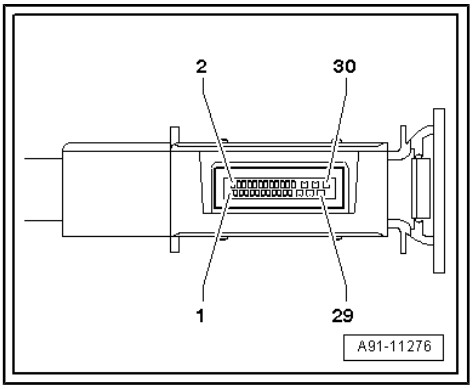

Note

Contacts which are not listed are not used.

30-pin connector - T30c-

All pins are connected to the control unit 2 for information electronics - J829- .

1 - NF in, left-side (low frequency)

2 - NF in, right-side (low frequency)

3 - Low frequency earth

4 - NF in, screen earth (low frequency)

13 - iPod data

14 - iPod data

16 - iPod detected

17 - D (+)

18 - D (–)

21 - Detect

22 - Earth

24 - FBAS wire (–)

25 - USB (earth)

27 - FBAS wire (+)

28 - USB (+5V)

12.3 Removing and installing connection for external audio sources - R199-

⇒ "12.3.1 Removing and installing connection for external audio sources R199 ", page 175

⇒ "12.3.2 Removing and installing connection 2 for external audio sources R231 ", page 176

12.3.1 Removing and installing connection for external audio sources - R199-

Connection for external audio sources - R199- -1- is located in storage box in centre console (front).

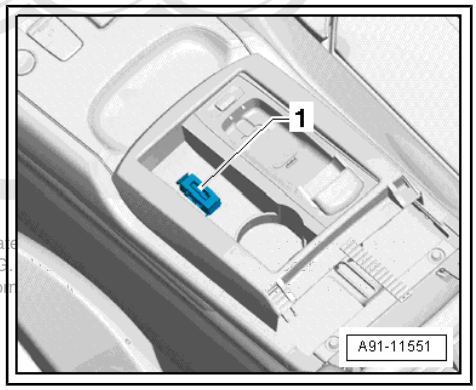

Removing

– Switch off ignition and all electrical equipment and remove ignition key.

Protected by copyright. Copying for private
permitted unless authorised by AUDI AG.
with respect to the correctness of infor

Connection for external audio sources - R199- -1- is clipped into rear of storage box in centre console (front).

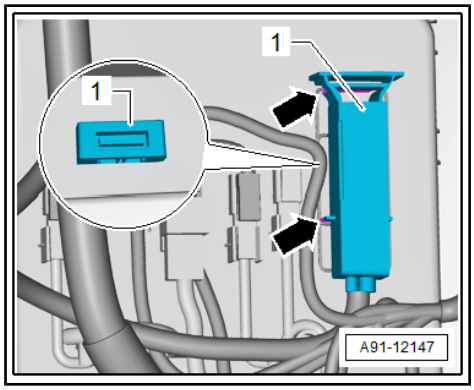

– Remove storage compartment in centre console (front) ⇒ General body repairs, interior; Rep. gr. 68 ; Centre armrest (front); Exploded view - centre armrest (front) .

– Unclip connection for external audio sources - R199- -1- from storage box -arrows-.

Installing

– Install in reverse sequence of removal.

12.3.2 Removing and installing connection 2 for external audio sources - R231-

The connection 2 for external audio sources - R231- -1- is located in the rear centre armrest storage compartment.

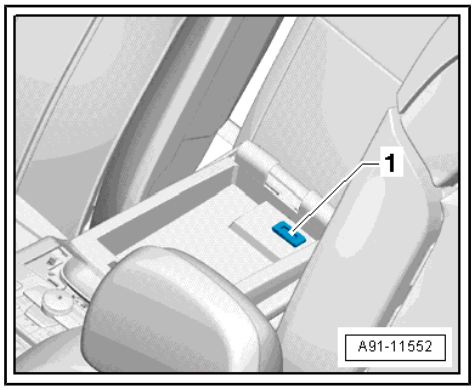

Removing

– Switch off ignition and all electrical equipment and remove ignition key.

Connection 2 for external audio sources - R231- -1- is clipped into rear of centre armrest storage compartment (rear).

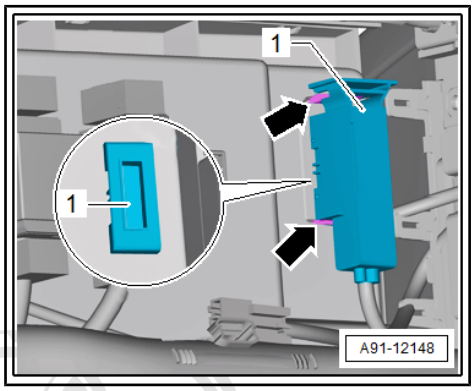

– Removing centre armrest storage compartment (rear) ⇒ General body repairs, interior; Rep. gr. 68 ; Centre console; Exploded view - centre console

– Unclip connection 2 for external audio sources - R231- -1- from storage box -arrows-.

Installing

– Install in reverse sequence of removal.

Protected by copyright. Copying for private or commercial purposes, in part or in whole, is not permitted unless authorised by AUDI AG. AUDI AG does not guarantee or accept any liability with respect to the correctness of information in this document. Copyright by AUDI AG.

13 Rear Seat Entertainment system (RSE)

⇒ “13.1 Overview - Rear Seat Entertainment system”, page 177

⇒ “13.2 Overview of fitting locations - Rear Seat Entertainment system”, page 177

13.1 Overview - Rear Seat Entertainment system

The Rear Seat Entertainment system (9WP) consists of:

- Control unit 2 for information electronics - J829- (DVD player - R7- /SD card reader) between rear seats in back panel
- Display units on backrests of front seats (multimedia system display unit 1 - Y22- , rear left/ multimedia system display unit 2 - Y23- , rear right)
- Multimedia system operating unit 2 - E499- in rear centre console
- Headphone connections in rear centre console
- Connection 2 for external audio sources - R231- in rear centre armrest storage compartment

Repairing fibre optic cables ⇒ Electrical system; Rep. gr. 97 ; Fibre optic cables .

13.2 Overview of fitting locations - Rear Seat Entertainment system

Protected by copyright. Copying for private or commercial purposes, in part or in whole, is not permitted unless authorised by AUDI AG. AUDI AG does not guarantee or accept any liability with respect to the correctness of information in this document. Copyright by AUDI AG.

1 - Multimedia system operating unit 2 - E499-

- ❑ Pin assignment ⇒ page 37
- ❑ Removing and installing ⇒ page 22

2 - Removal wedge - 3409-

3 - Radio release tool - T10057-

4 - Control unit 2 for information electronics - J829-

- ❑ Pin assignment ⇒ page 33
- ❑ Removing and installing ⇒ page 16

5 - Multimedia system display unit 1 - Y22- / multimedia system display unit 2 - Y23-

- ❑ Pin assignment ⇒ page 38
- ❑ Removing and installing ⇒ page 18

6 - Bolt

- ❑ 2x
- ❑ 4 Nm

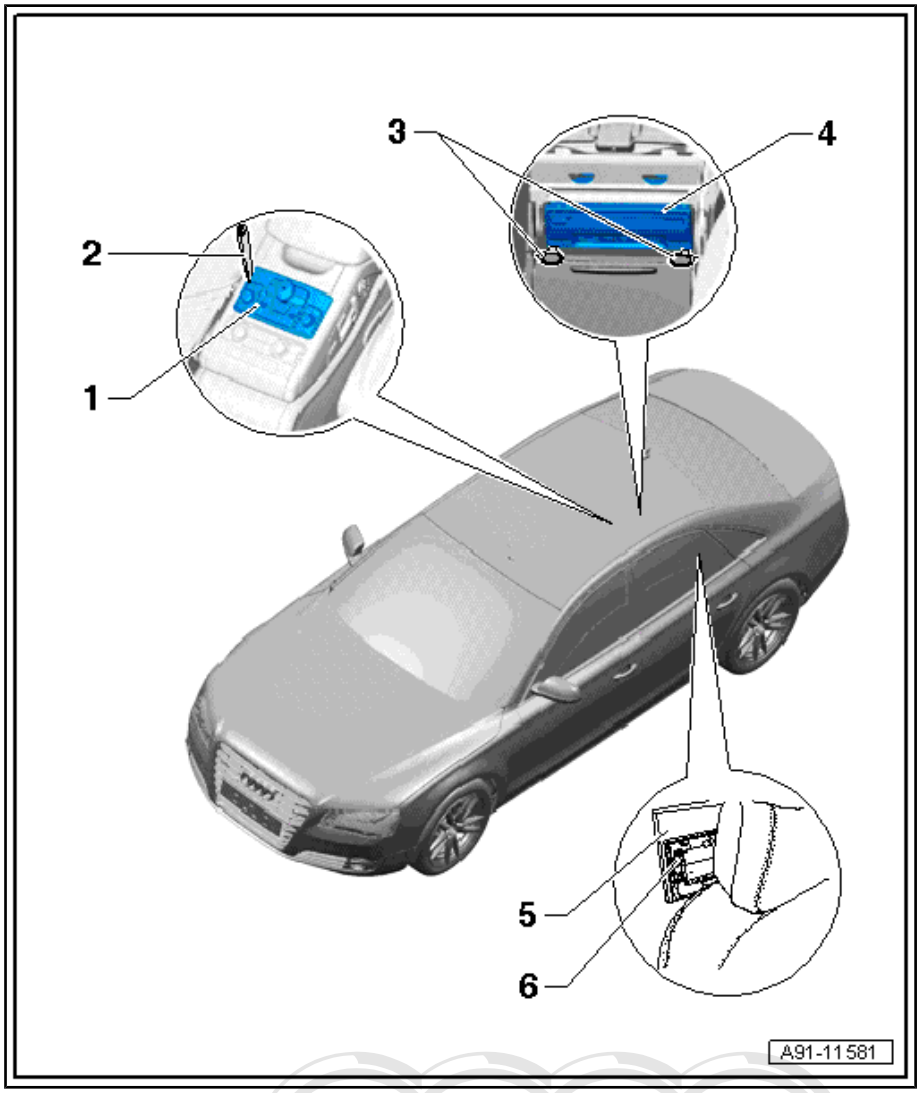

Protected by copyright. Copying for private or commercial purposes, in part or in whole, is not permitted unless authorised by AUDI AG. AUDI AG does not guarantee or accept any liability with respect to the correctness of information in this document. Copyright by AUDI AG.

14 Night vision system

⇒ “14.1 Overview of fitting locations - night vision system”, page 179

⇒ “14.2 Removing and installing camera for night vision system”, page 181

⇒ “14.3 Removing and installing control unit for night vision system”, page 184

14.1 Overview of fitting locations - night vision system

⇒ “14.1.1 Layout - night vision system”, page 179

⇒ “14.1.2 Overview of fitting locations - night vision system”, page 180

⇒ “14.1.3 Exploded view - camera for night vision system R212 ”, page 181

14.1.1 Layout - night vision system

The night vision system assists the driver when driving in the dark. The night vision screen in the instrument cluster displays a thermal image of the area in front of the vehicle. The range of approximately 300 m is far greater than that of the dipped beam or high beam. People and animals are also visible on the screen in complete darkness due to their body temperature. The system detects pedestrians at a distance of 13 m to 90 m in front of the vehicle and highlights them in yellow brackets. The system also maps out a warning area using the current speed and yaw rate. If a pedestrian is located within or moving towards the warning area, the system alerts the driver to a possible collision with the pedestrian. The colour of the brackets highlighting the pedestrian changes to red and a warning gong sounds.

Protected by copyright. Copying for private or commercial purposes, in part or in whole, is not permitted unless authorised by AUDI AG. AUDI AG does not guarantee or accept any liability with respect to the correctness of information in this document. Copyright by AUDI AG.

The night vision system consists of a camera for night vision system - R212- and a control unit for night vision system - J853- . The sensor for night vision system - E680- is integrated in the light switch - E1- . The camera for night vision system - R212- is located on the radiator grille in the outer Audi ring on the left side of the vehicle. The control unit for night vision system - J853- is located in the front footwell on the left side of the vehicle. The camera for night vision system - R212- is a subsystem of the night vision system control unit - J853- and diagnosable via the night vision system control unit - J853- . In the event of a fault, the camera for night vision system - R212- and night vision system control unit - J853- can be replaced individually. A repair kit containing a protective window, seal, quick-release fastener, 2 cotton buds for cleaning the area around the seal and instructions is available for the camera for night vision system - R212- (if the protective window is damaged or scratched by chippings or sand particles).

However, if the protective window is no longer watertight due to the damage, the camera for night vision system - R212- must be replaced completely ⇒ page 181 .

The protective window of the camera for night vision system - R212- is cleaned by a washer jet. The washer jet is connected to the headlight washer system.

The camera for night vision system - R212- must be calibrated for the night vision system to function correctly.

Recalibration is necessary if:

- the entry “no or incorrect basic setting/adaption” is actively stored in the event memory,

- the camera for night vision system - R212- has been removed or replaced,
- the bumper or radiator grille has been removed or replaced,
- adjustment work has been carried out on the rear axle,
- the vehicle chassis has been modified.

Recalibration is not required following modifications affecting the night vision system control unit - J853- (replacement, software update).

Note

Before the night vision system is calibrated, the event memory must be exported and troubleshooting performed, if necessary. Calibration may only be performed using a wheel aligner approved by VW/Audi. Only the adjusting device - VAS 6430- and basic adjusting device set - VAS 6430/1- with accompanying night vision assistant calibrating device - VAS 6430/6- are permissible for use in calibrating the night vision system.

14.1.2 Overview of fitting locations - night vision system

1 - Light switch - E1- with sensor for night vision system - E680-

- ❑ Removing and installing ⇒ Electrical system; Rep. gr. 96 ; Controls; Overview of fitting locations - controls in dash panel .

2 - Control unit for night vision system - J853-

- ❑ Fitting location in front left footwell.
- ❑ Removing and installing ⇒ page 184

3 - Camera for night vision system - R212-

- ❑ Removing and installing ⇒ page 181
- ❑ Calibration ⇒ Front and all-wheel drive running gear; Rep. gr. 44 ; night vision system; calibrating night vision system

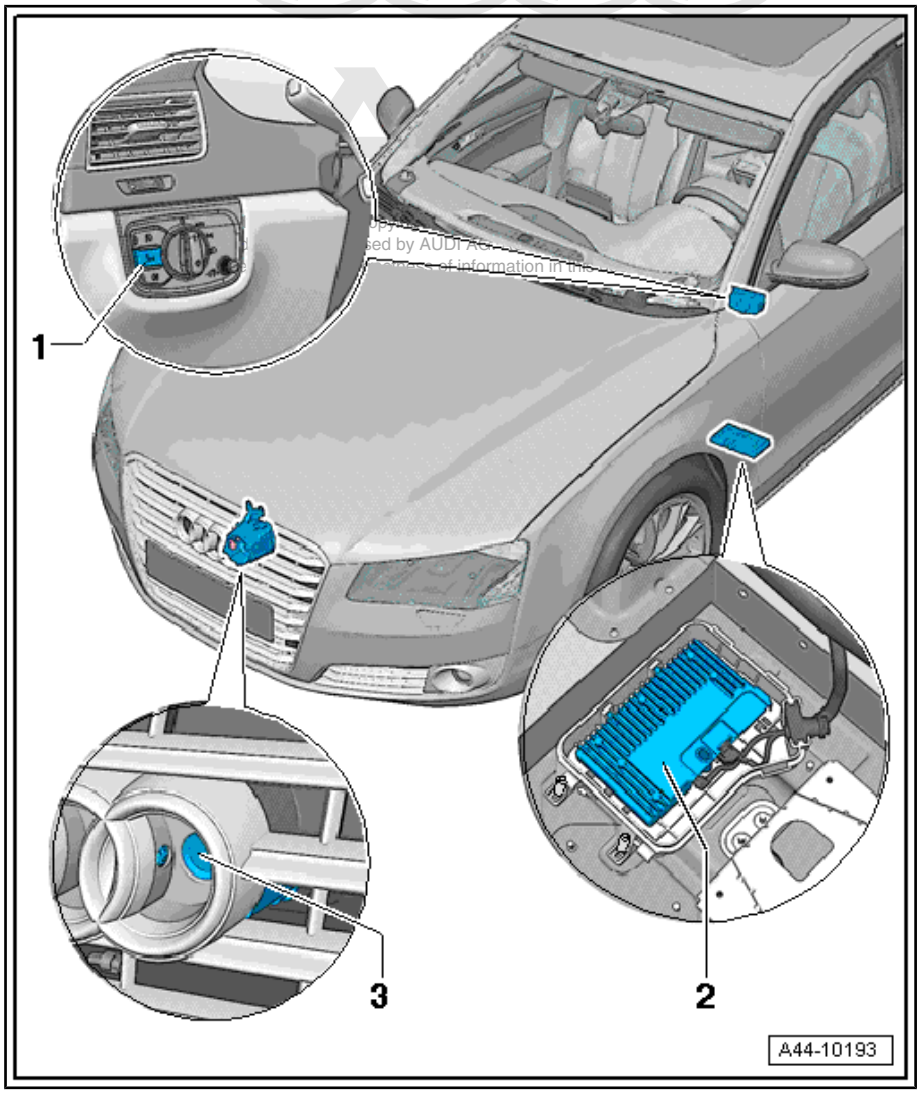

14.1.3 Exploded view - camera for night vision system - R212-

1 - Retaining plate

2 - Bolt
- ❑ 5 Nm

3 - Bolt
- ❑ 6 Nm

4 - Retaining plate
- ❑ with adjuster screw and mounting for washer jet

5 - Camera for night vision system - R212-

6 - 6-pin connector - T6d-

7 - Seal
- ❑ Renew if removed

8 - Protective window
- ❑ Removing and installing

Note

If the protective window is no longer watertight due to the damage, the camera for night vision system - R212- must be replaced completely.

9 - Cover
- ❑ with quick-release fastener

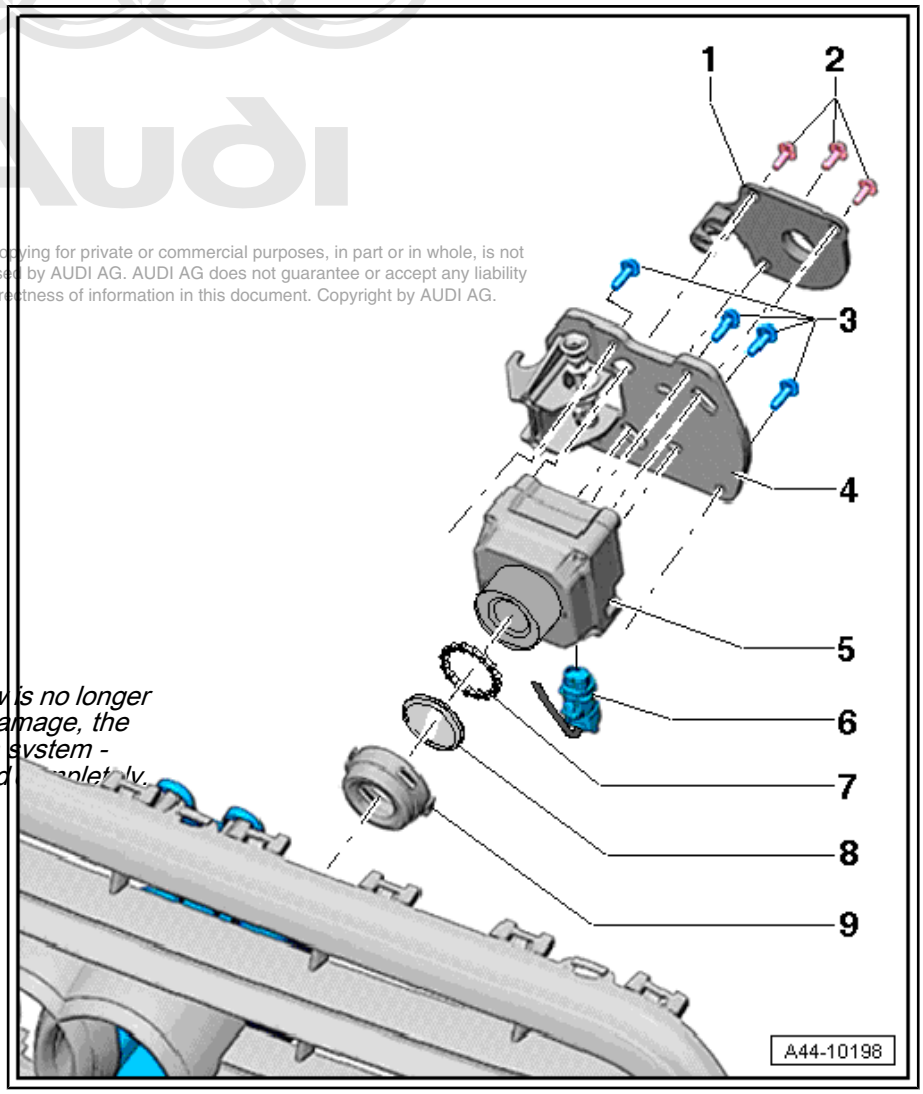

Protected by copyright. Copying for private or commercial purposes, in part or in whole, is not permitted unless authorised by AUDI AG. AUDI AG does not guarantee or accept any liability with respect to the correctness of information in this document. Copyright by AUDI AG.

14.2 Removing and installing camera for night vision system

Special tools and workshop equipment required

- ♦ Torque wrench - V.A.G 1783-

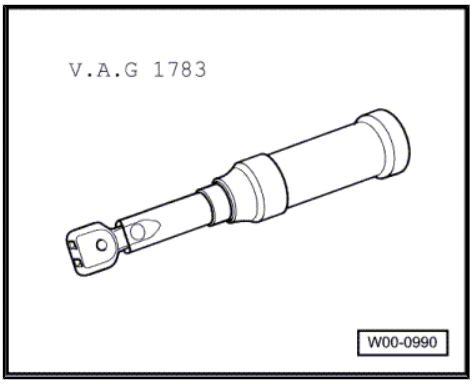

♦ Hose clamps up to 25 mm - 3094-

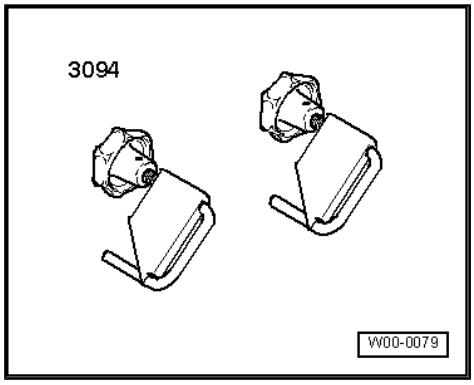

Removing

– Remove front lock carrier cover ⇒ General body repairs, exterior; Rep. gr. 50 ; Lock carrier; Exploded view - lock carrier .

– Remove the bolts from the left and right of the front bumper cover.

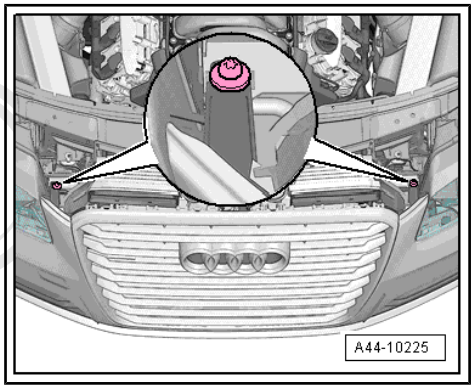

– Remove the left and right air intake connections -arrows- if installed.

Protected by copyright. Copyright for private or commercial purposes, in part or
permitted unless authorised by AUDI AG. AUDI AG does not guarantee or ac
with respect to the correctness of information in this document. Copyright

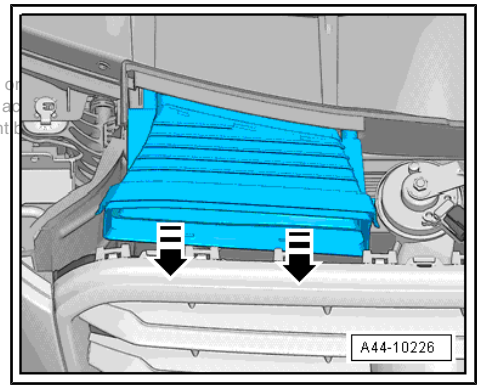

– Unscrew bolt -1- and detach bracket -2-.

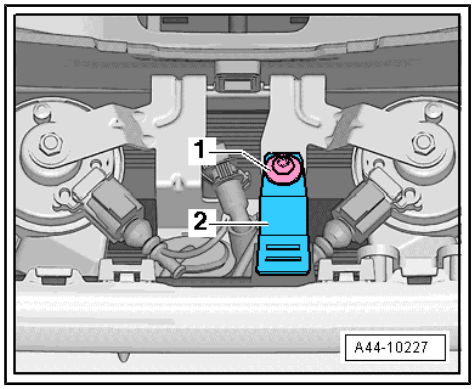

– Release retaining clip -arrow- and pull off washer fluid hose -1-.
– Clamp off washer fluid hose at an appropriate point using hose clamps up to 25 mm - 3094- .
– Remove horns and bracket from front end ⇒ Electrical system; Rep. gr. 90 ; Horn; Exploded view - horn and place to one side.

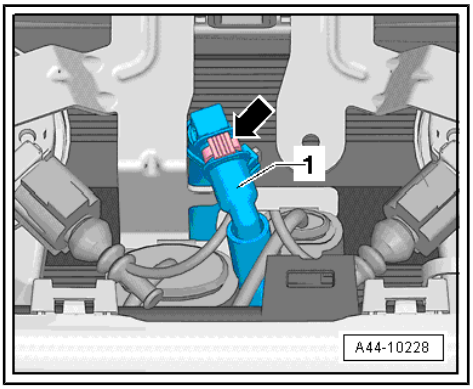

– Remove bolts -arrows-.
– The front bumper cover must be pulled forwards slightly in order for the following work to be performed.
– Detach camera for night vision system - R212- and retaining plate from bumper cover and remove upwards. Take care not to damage washer jet.
– Release connector on camera for night vision system - R212- .

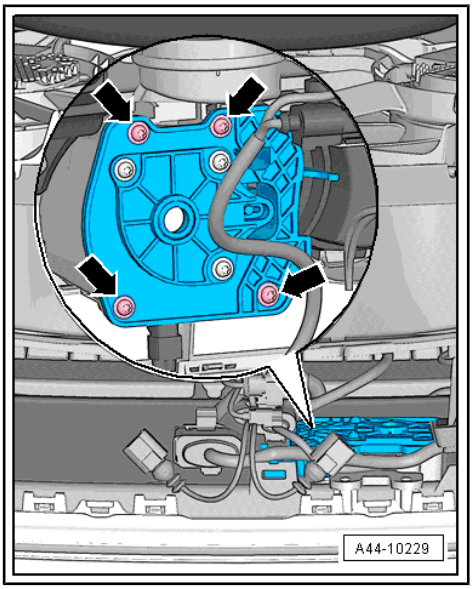

– Unscrew bolts -1- to -3- and detach camera for night vision system - R212- from retaining plate.

Removing protective window

• Camera for night vision system - R212- removed

Note

If the protective window is no longer watertight due to the damage, the camera for night vision system - R212- must be replaced completely.

Protected by copyright. Copying for private or commercial purposes, in part or in whole, is not permitted unless authorised by AUDI AG. AUDI AG does not guarantee or accept any liability with respect to the correctness of information in this document. Copyright by AUDI AG.

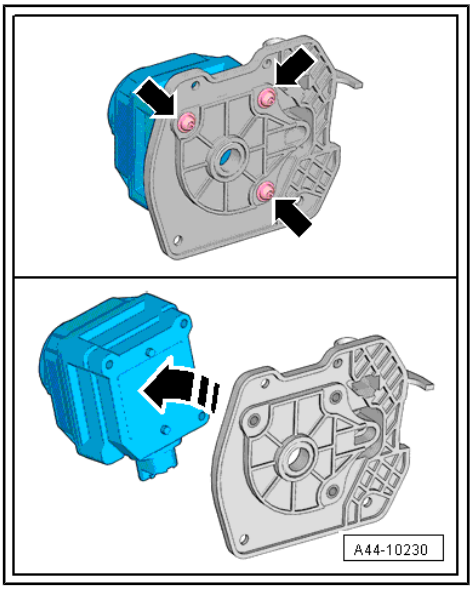

– Push together retaining lugs -arrow- and turn cover anticlockwise through 90°.

– Remove cover, protective window and seal from camera for night vision system - R212- .

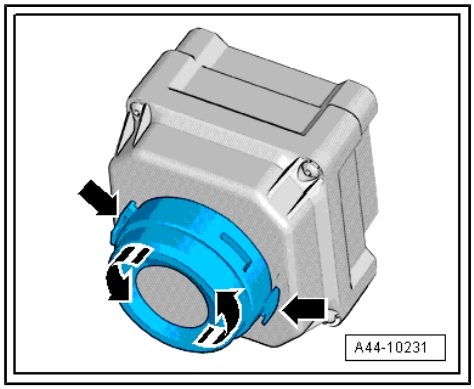

Note

Always replace the seal after removing.

Installing

– Install in reverse order. Pay attention to the following:

Tightening torques

♦ ⇒ "14.1.3 Exploded view - camera for night vision system R212 ", page 181

– Calibrate camera for night vision system⇒ Front and all-wheel drive running gear; Rep. gr. 44 ; Night vision system; calibrating night vision system .

14.3 Removing and installing control unit for night vision system

Special tools and workshop equipment required

♦ Vehicle diagnostic tester with accompanying diagnostic lead

♦ Torque wrench - V.A.G 1783-

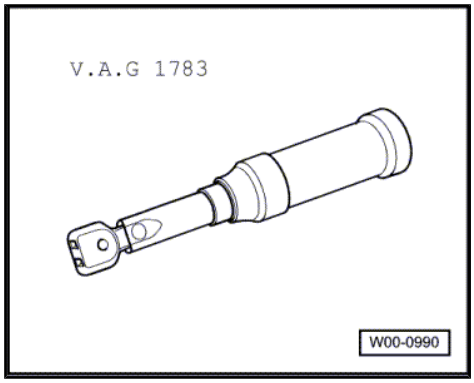

Removing

The night vision system control unit - J853- is located in the front left footwell.

Note

If control unit is to be renewed, select the "Replace control unit" function for appropriate control unit in ⇒ Vehicle diagnostic tester.

– Unscrew left front seat and push back with wiring connected⇒ General body repairs, interior; Rep. gr. 72 ; Front seats; Exploded view - front seat .

– Remove floor mat.

– Remove sill panel trim ⇒ General body repairs, interior; Rep. gr. 70 ; Passenger compartment trim; Exploded view - sill panel trim .

– Removing foot rest ⇒ General body repairs, interior; Rep. gr. 70 ; Passenger compartment trim; Exploded view - foot rest and floor covering .

Protected by copyright. Copying for private or commercial purposes, in part or in whole, is not permitted unless authorised by AUDI AG. AUDI AG does not guarantee or accept any liability with respect to the correctness of information in this document. Copyright by AUDI AG.

– Remove emergency release cover -1- -arrows-.

– Disengage the floor covering, push to one side and guide the emergency release cover -1- through the opening.

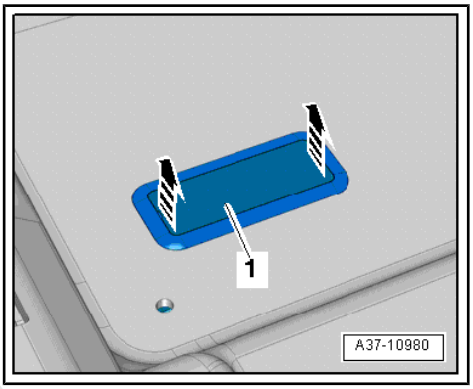

– Release clips in direction of -arrow-.

– Open cover -1-.

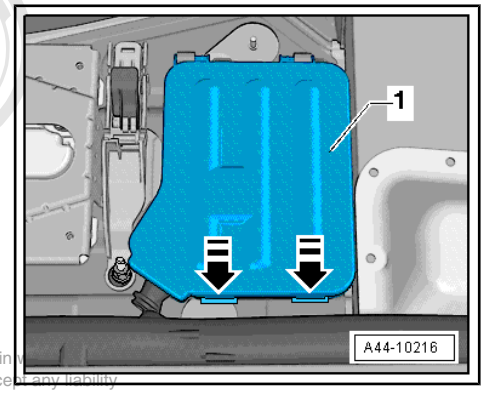

Protected by copyright. Copying for private or commercial purposes, in part or in
permitted unless authorised by AUDI AG. AUDI AG does not guarantee or accept any liability
with respect to the correctness of information in this document. Copyright by AUDI AG

– Release connectors -1- and -2- and remove from night vision system control unit - J853- -3-.

• Release connector -2- first, then connector -1-

– Press retaining lug in -direction of arrow- and remove night vision system control unit - J853- -3- from electronics box.

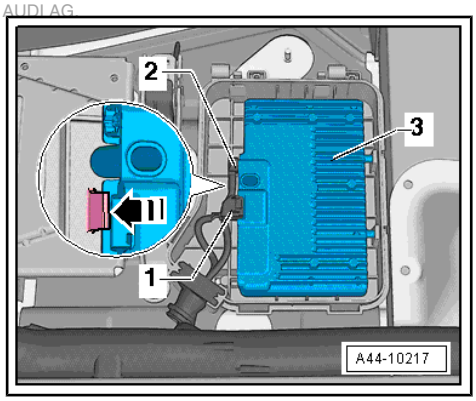

Installing

Install in reverse order.

15 Overhead view camera

⇒ “15.1 Layout - overhead view camera system”, page 186

⇒ “15.2 Overview of fitting locations - overhead view camera”, page 189

⇒ “15.3 Removing and installing control unit for overhead view camera J928 ”, page 191

⇒ “15.4 Removing and installing rear overhead view camera R246 ”, page 193

⇒ “15.5 Removing and installing front overhead view camera R243 ”, page 194

⇒ “15.6 Calibrating overhead view camera system”, page 195

⇒ “15.7 Pin assignment for control unit for overhead view camera J928 ”, page 212

15.1 Layout - overhead view camera system

The overhead view camera system consists of four cameras. They are located in the radiator grille, in both exterior mirrors and in the rear lid. The system helps the driver when parking, manoeuvring or when driving in tight spaces (such as driveways). Camera images are displayed on display unit for front information display and operating unit control unit - J685- (display).

Camera views available to be selected:

- Bird's eye view: The images from all four cameras (front overhead view camera - R243- / left overhead view camera - R244- / right overhead view camera - R245- / rear overhead view camera - R246-) give a panorama view of the whole vehicle.
- Front camera: The image from the camera in the front bumper cover (front overhead view camera - R243-) shows the area in front of the vehicle (up to the left and right edges of the bumper).
- Side cameras: The images from the cameras in the left and right exterior mirrors (left overhead view camera - R244- / right overhead view camera - R245-) show the area close to the sides of the vehicle.
- Rear camera: The image from the reversing camera in the rear lid (rear overhead view camera - R246-) shows the area behind the vehicle.

Protected by copyright. Copying for private or commercial purposes, in part or in whole, is not permitted unless authorised by AUDI AG. AUDI AG does not guarantee or accept any liability with respect to the correctness of information in this document. Copyright by AUDI AG.

Components of overhead view camera system:

- Front overhead view camera - R243-
- Left overhead view camera - R244-
- Right overhead view camera - R245-
- Rear overhead view camera - R246-
- Control unit for overhead view camera - J928-
- Control unit 1 for information electronics - J794-

Up to model year 2013, including vehicles with high-voltage electrical system

1 - Display unit for front information display and operating unit control unit - J685- in dash panel (centre)

2 - Control unit 1 for information electronics - J794- in dash panel

3 - Multimedia system operating unit - E380- in centre console (front)

4 - MOST bus

5 - Right overhead view camera - R245- in exterior mirror (right-side)

6 - Data bus diagnostic interface - J533- in luggage compartment on back panel (right-side)

7 - CAN bus, dash panel insert

8 - Rear overhead view camera - R246- in rear lid

9 - Control unit for overhead view camera - J928- in luggage compartment on back panel (left-side)

10 - Left overhead view camera - R244- in exterior mirror (left-side)

11 - FBAS wire from control unit for overhead view camera - J928-

12 - Front overhead view camera - R243- in front bumper cover

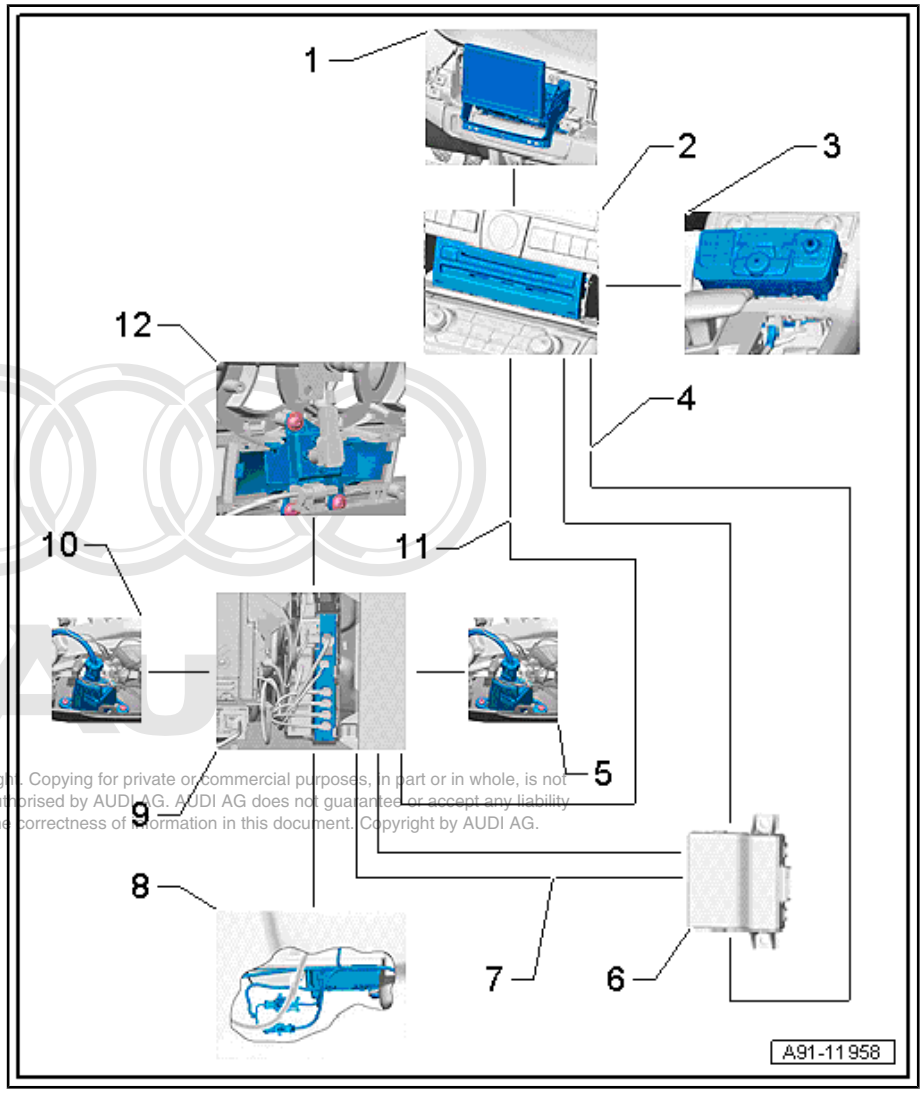

Copyright. Copying for private or commercial purposes, in part or in whole, is not permitted unless authorised by AUDI AG. AUDI AG does not guarantee or accept any liability with respect to the correctness of information in this document. Copyright by AUDI AG.

From model year 2014, excluding vehicles with high-voltage electrical system

1 - Display unit for front information display and operating unit control unit - J685- in dash panel (centre)

2 - Control unit 1 for information electronics - J794- in dash panel

3 - Multimedia system operating unit - E380- in centre console (front)

4 - MOST bus

5 - Right overhead view camera - R245- in exterior mirror (right-side)

6 - Data bus diagnostic interface - J533- in luggage compartment on back panel (right-side)

7 - CAN bus, dash panel insert

8 - Rear overhead view camera - R246- in rear lid

9 - Control unit for overhead view camera - J928- in luggage compartment on back panel (left-side)

10 - Left overhead view camera - R244- in exterior mirror (left-side)

11 - FBAS wire from control unit for overhead view camera - J928-

12 - Front overhead view camera - R243- in front bumper cover

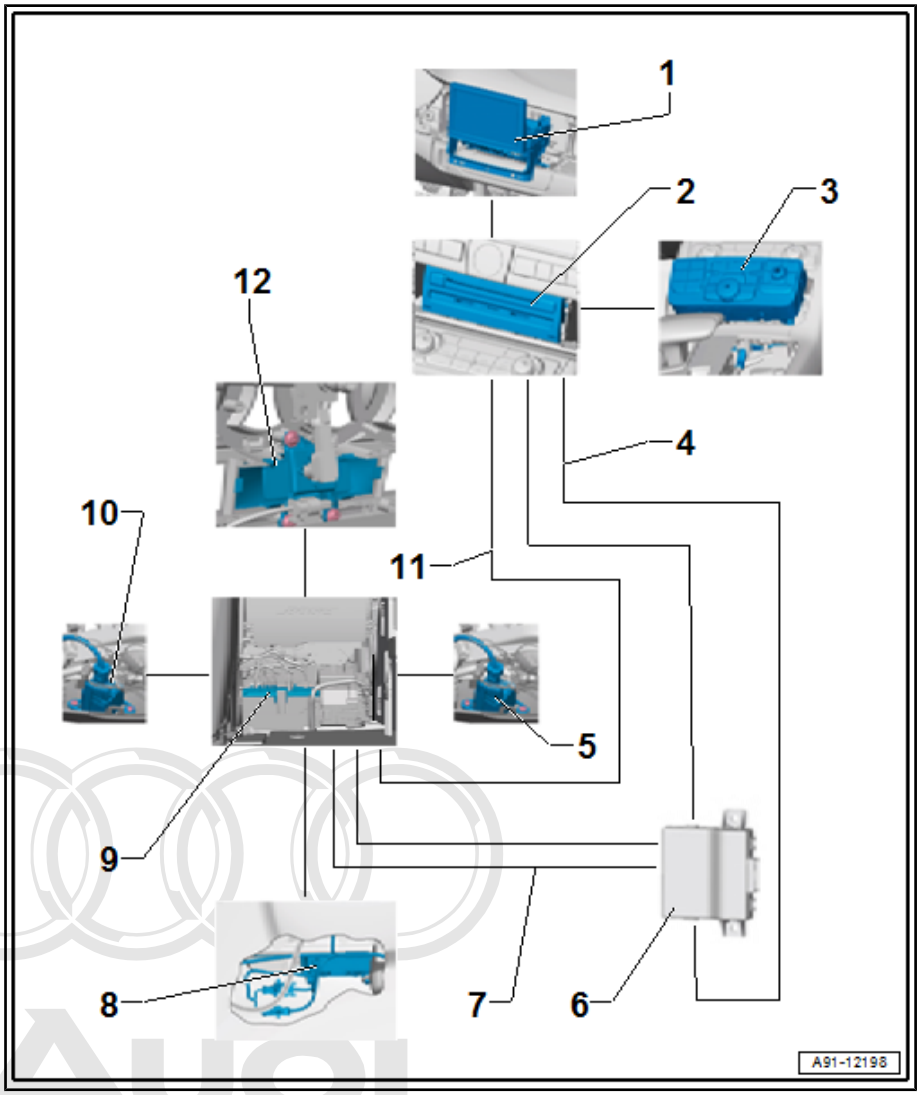

Protected by copyright. Copying for private or commercial purposes, in part or in whole, is not permitted unless authorised by AUDI AG. AUDI AG does not guarantee or accept any liability with respect to the correctness of information in this document. Copyright by AUDI AG.

As an option, other control units may also be installed.

Do not fit an additional number plate on vehicles equipped with overhead view camera system as this will impair the function of the system.

Fault finding is performed via the “Guided Fault Finding” ⇒ Vehicle diagnostic tester.

15.2 Overview of fitting locations - overhead view camera

⇒ "15.2.1 Overview of fitting locations - overhead view camera, up to model year 2013, including vehicles with high-voltage electrical system", page 189

⇒ "15.2.2 Overview of fitting locations - overhead view camera, from model year 2014, excluding vehicles with high-voltage electrical system", page 190

15.2.1 Overview of fitting locations - overhead view camera, up to model year 2013, including vehicles with high-voltage electrical system

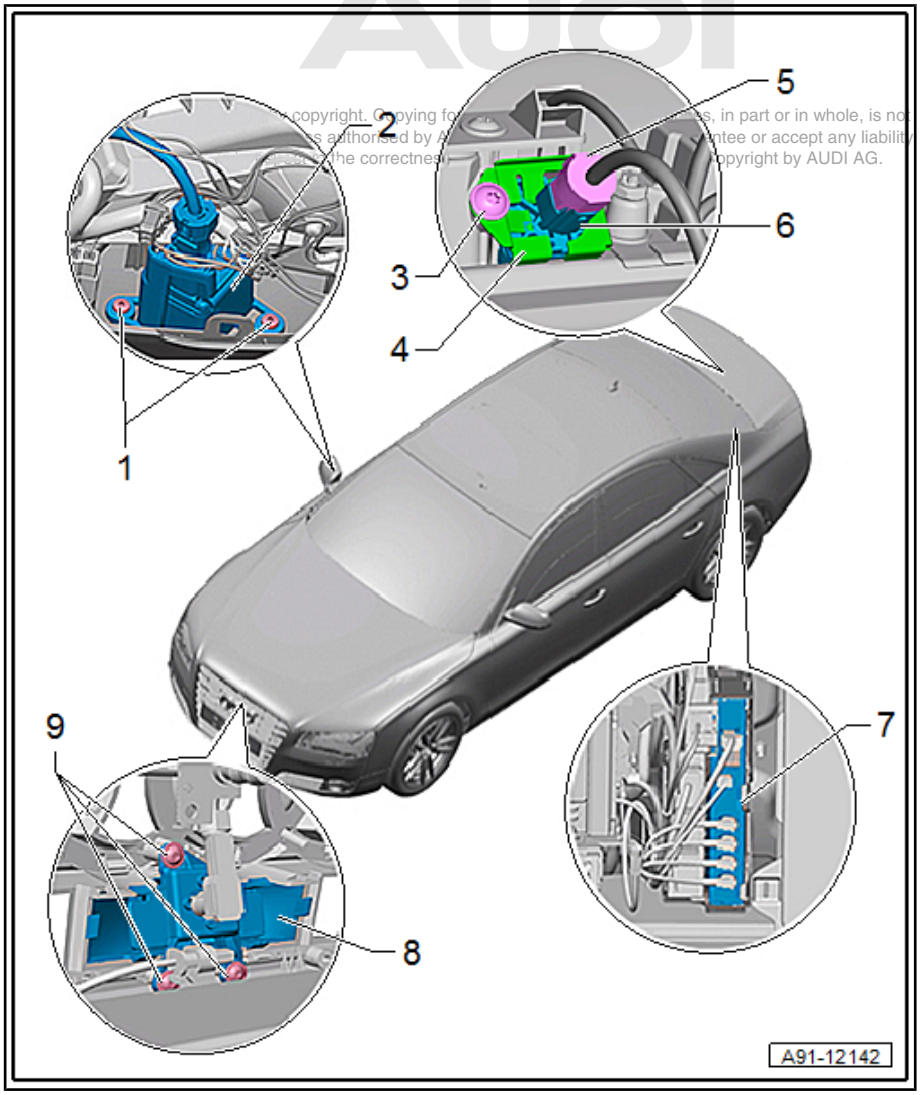

1 - Bolt

- ❑ 2x
- ❑ 2 Nm

2 - Right overhead view camera - R245- , left overhead view camera - R244-

- ❑ Removing and installing ⇒ General body repairs, exterior; Rep. gr. 66 ; Exterior mirrors; Exploded view - exterior mirror .
- ❑ Calibration ⇒ page 195

3 - Bolt

- ❑ 2 Nm

4 - Retaining plate

5 - Rear overhead view camera - R246-

- ❑ Removing and installing ⇒ page 193
- ❑ Calibration ⇒ page 195

6 - Connector

7 - Control unit for overhead view camera - J928-

- ❑ Pin assignment
- ❑ Removing and installing ⇒ page 191
- ❑ Calibration ⇒ page 195

8 - Front overhead view camera - R243-

- ❑ Removing and installing ⇒ page 194
- ❑ Calibration ⇒ page 195

9 - Bolt

- ❑ 3x
- ❑ 2 Nm

15.2.2 Overview of fitting locations - overhead view camera, from model year 2014, excluding vehicles with high-voltage electrical system

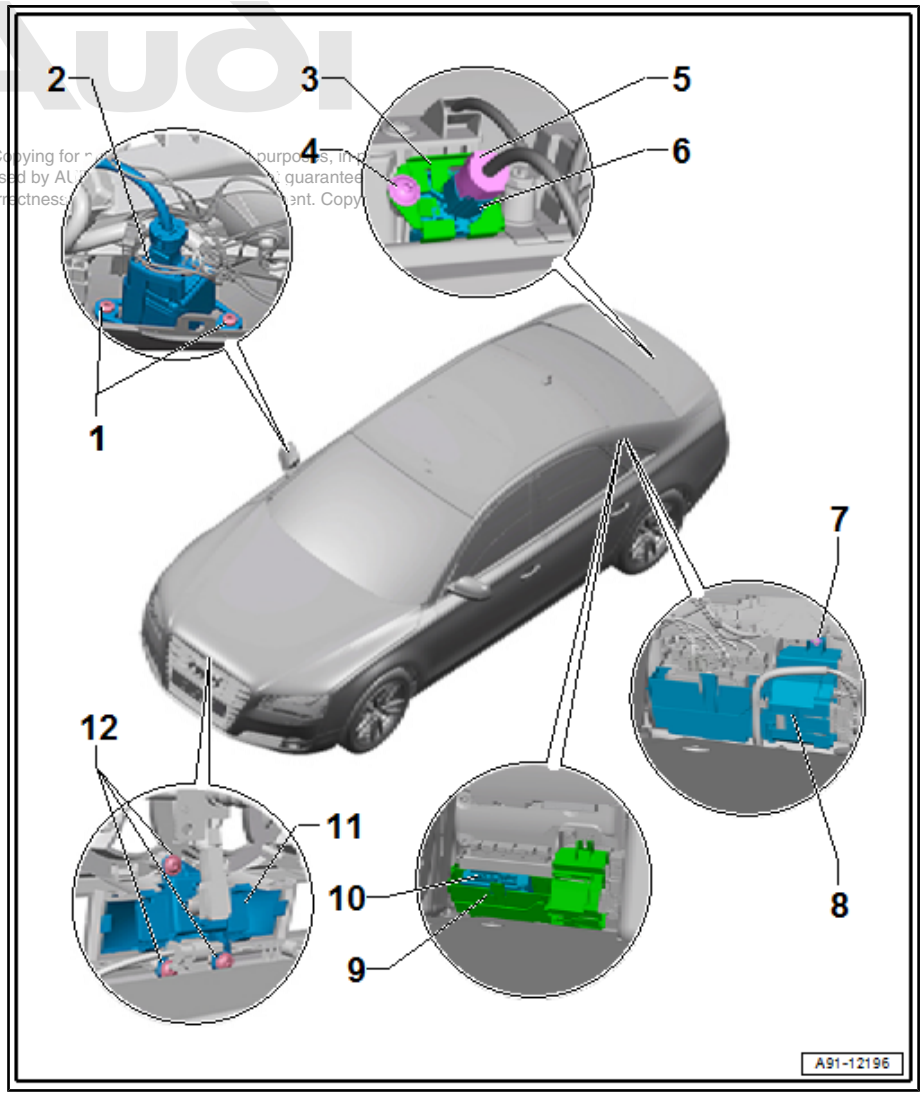

1 - Bolt

- ❑ 2x
- ❑ 2 Nm

2 - Right overhead view camera - R245- , left overhead view camera - R244-

- ❑ Removing and installing ⇒ General body repairs, exterior; Rep. gr. 66 ; Exterior mirrors; Exploded view - exterior mirror .
- ❑ Calibration ⇒ page 195

3 - Retaining plate

4 - Bolt

- ❑ 2 Nm

5 - Rear overhead view camera - R246-

- ❑ Removing and installing ⇒ page 193
- ❑ Calibration ⇒ page 195

6 - Connector

7 - Nut

- ❑ 4 Nm

8 - Bracket

9 - Bracket

10 - Control unit for overhead view camera - J928-

- ❑ Pin assignment ⇒ page 212
- ❑ Removing and installing ⇒ page 193
- ❑ Calibration ⇒ page 195

11 - Front overhead view camera - R243-

- ❑ Removing and installing ⇒ page 194
- ❑ Calibration ⇒ page 195

12 - Bolt

- ❑ 3x
- ❑ 2 Nm

15.3 Removing and installing control unit for overhead view camera - J928-

⇒ "15.3.1 Removing and installing overhead view camera control unit J928 , up to model year 2013, including vehicles with high-voltage electrical system", page 191

⇒ "15.3.2 Removing and installing overhead view camera control unit J928 , from model year 2014, excluding vehicles with high-voltage electrical system", page 193

15.3.1 Removing and installing overhead view camera control unit - J928- , up to model year 2013, including vehicles with high-voltage electrical system

The control unit for overhead view camera - J928- -1- is located in the luggage compartment on the back panel (left-side).

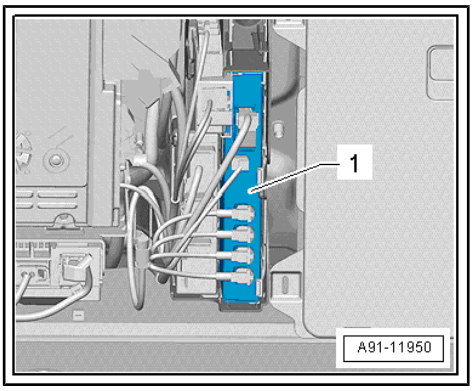

Note

If control unit is to be renewed, select the "Replace control unit" function for appropriate control unit in ⇒ Vehicle diagnostic tester.

– Switch off ignition and all electrical equipment and remove ignition key.

Removing

– Remove luggage compartment back panel trim ⇒ General body repairs, interior; Rep. gr. 70 ; Luggage compartment trim panels; Exploded view - luggage compartment side trim .

Protected by copyright. Copying for private or commercial purposes, in part or in whole, is not permitted unless authorised by AUDI AG. AUDI AG does not guarantee or accept any liability with respect to the correctness of information in this document. Copyright by AUDI AG.

The control unit for overhead view camera - J928- -1- is only wedged in the bracket.

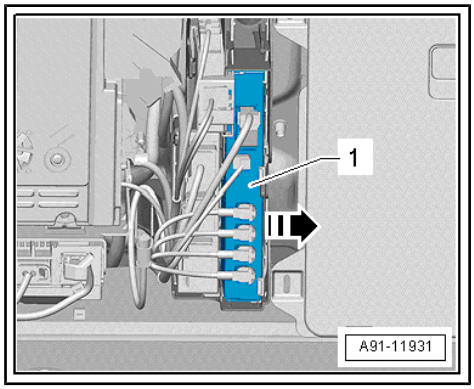

High-voltage vehicles only

Installing the high-voltage battery (hybrid battery unit - AX1-) in the luggage compartment restricts the installation space around the overhead view camera control unit - J928- . The hybrid battery unit - AX1- in the luggage compartment must be moved back and placed on the rails - T40275- first.

– Observe warning instructions for work on the high-voltage system ⇒ Electrical system; Rep. gr. 93 ; General warning instructions for work on the high-voltage system .

– Perform steps for removal of hybrid battery unit - AX1- to the point where it can be set down in the luggage compartment ⇒ Electrical system; Rep. gr. 93 ; High-voltage battery unit; Exploded view - high-voltage battery .

All vehicles

– Release and unplug connectors at control unit for overhead view camera - J928- -1-.

– Use a small screwdriver to press retainers -arrow- towards right side and pull control unit for overhead view camera - J928- out of bracket.

Installing

– Installation is carried out in reverse sequence; note the following:

Protected by copyright. Copying for private or commercial purposes, in part or in whole, is not permitted unless authorised by AUDI AG. AUDI AG does not guarantee or accept any liability with respect to the correctness of information in this document. Copyright by AUDI AG.

High-voltage vehicles only

– Observe warning instructions for work on the high-voltage system ⇒ Electrical system; Rep. gr. 93 ; General warning instructions for work on the high-voltage system .

– Install hybrid battery unit - AX1- ⇒ Electrical system; Rep. gr. 93 ; High-voltage battery unit; Exploded view - high-voltage battery .

All vehicles

– Perform calibration
⇒ “15.6 Calibrating overhead view camera system”, page 195 .

15.3.2 Removing and installing overhead view camera control unit - J928- , from model year 2014, excluding vehicles with high-voltage electrical system

The control unit for overhead view camera - J928- -1- is located in the luggage compartment on the back panel (left-side).

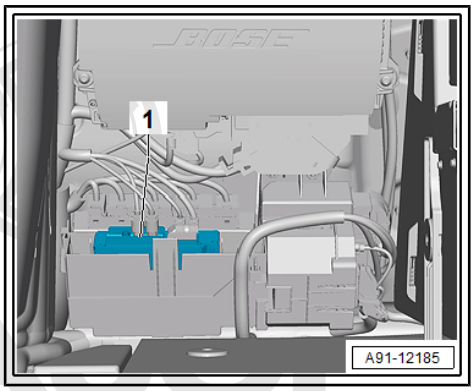

Note

If control unit is to be renewed, select the "Replace control unit" function for appropriate control unit in ⇒ Vehicle diagnostic tester.

– Switch off ignition and all electrical equipment and remove ignition key.

Removing

– Remove luggage compartment back panel trim ⇒ General body repairs, interior; Rep. gr. 70 ; Luggage compartment trim panels; Exploded view - luggage compartment side trim .

Copyright. Copying for private or commercial purposes, in part or in whole, is not permitted unless authorised by AUDI AG. AUDI AG does not guarantee or accept any liability with respect to the correctness of information in this document. Copyright by AUDI AG.

The control unit for overhead view camera - J928- -1- is only wedged in the bracket.

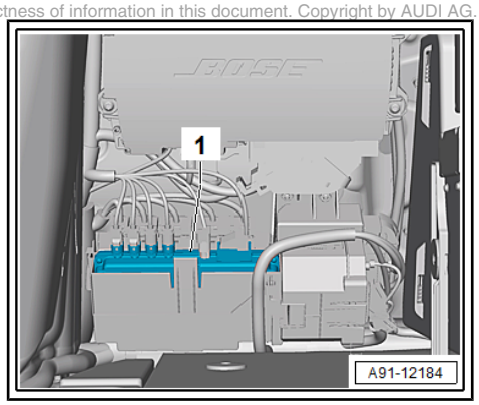

– Push catch using a small screwdriver or hand and pull overhead view camera control unit - J928- -1- out of bracket -2-.

– Release and unplug connectors at control unit for overhead view camera - J928- -1-.

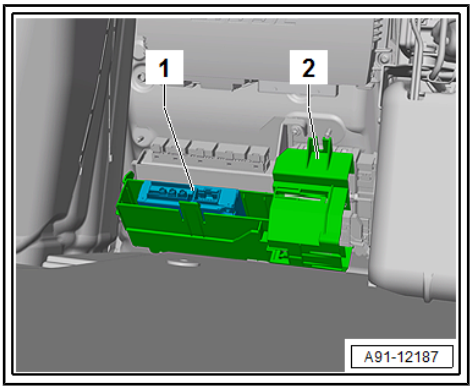

Installing

– Installation is carried out in reverse sequence; note the following:

– Perform calibration
⇒ "15.6 Calibrating overhead view camera system", page 195 .

15.4 Removing and installing rear overhead view camera - R246-

Rear overhead view camera - R246- is installed in handle in rear lid.

– Switch off ignition and all electrical equipment and remove ignition key.

Removing

The rear overhead view camera - R246- is equipped with a trailing cable. Connectors to vehicle wiring harness are located in rear lid.

– Remove rear lid trim ⇒ General body repairs, interior; Rep. gr. 70 ; Luggage compartment trim panels; Overview of fitting locations - luggage compartment trim panels .

– Release and unplug connectors -4- at rear overhead view camera - R246- -1-.

– Remove bolt -3-.

– Detach retaining plate -2-.

– Pull rear overhead view camera - R246- -1- out of handle.

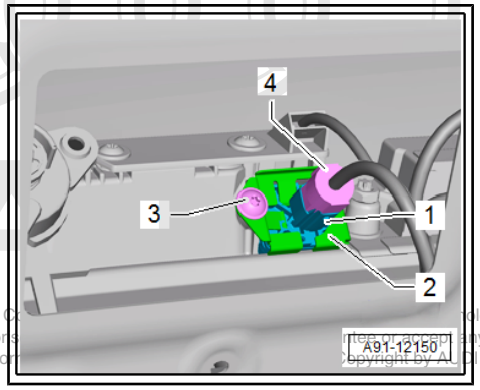

Protected by copyright. Copying for private or public use, is not permitted unless authorised by AUDI AG. No liability with respect to the correctness of copied data. Copyright by AUDI AG.

Installing

– Install in reverse sequence of removal.

– Close rear lid.

If the rear overhead view camera - R246- has been renewed, it must be re-adapted before it is calibrated.

Use ⇒ Vehicle diagnostic tester to do so.

– Perform calibration ⇒ page 195 .

Tightening torques

♦ ⇒ “15.2.1 Overview of fitting locations - overhead view camera, up to model year 2013, including vehicles with high-voltage electrical system”, page 189

♦ ⇒ “15.2.2 Overview of fitting locations - overhead view camera, from model year 2014, excluding vehicles with high-voltage electrical system”, page 190

15.5 Removing and installing front overhead view camera - R243-

Front overhead view camera - R243- is fitted in bumper cover between Audi rings (between camera for night vision system - R212- and garage door operation control unit - J530-).

– Switch off ignition and all electrical equipment and remove ignition key.

Removing

– Remove front bumper cover ⇒ General body repairs, exterior; Rep. gr. 63 ; Bumper (front); Exploded view - bumper cover .

– Remove radiator grille from bumper cover ⇒ General body repairs, exterior; Rep. gr. 66 ; Radiator grille/front trim panel; Exploded view - radiator grille .

– Remove bolts -arrows- on front overhead view camera - R243- -2-.

– Remove front overhead view camera - R243- -2- from bumper cover and unplug connector -1-.

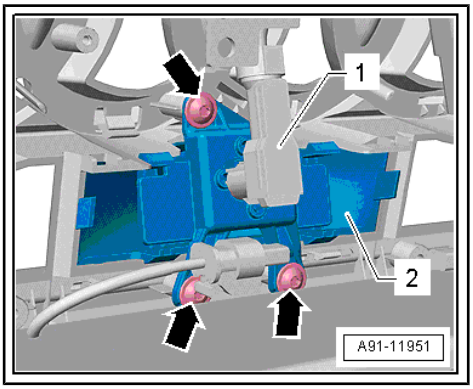

Installing

– Install in reverse sequence of removal.

If the front overhead view camera - R243- has been renewed, it must be re-adapted before it is calibrated.

Use ⇒ Vehicle diagnostic tester to do so.

– Perform calibration ⇒ page 195 .

Tightening torques

- ⇒ “15.2.1 Overview of fitting locations - overhead view camera, up to model year 2013, including vehicles with high-voltage electrical system”, page 189
- ⇒ “15.2.2 Overview of fitting locations - overhead view camera, from model year 2014, excluding vehicles with high-voltage electrical system”, page 190

15.6 Calibrating overhead view camera system

⇒ “15.6.1 Setting up and aligning calibration unit VAS 6350 with calibration unit for overhead view camera VAS 6350/6 ”, page 195

⇒ “15.6.2 Calibrating front overhead view camera R243 ”, page 199

⇒ “15.6.3 Calibrating left overhead view camera R244 / right overhead view camera R245 ”, page 203

⇒ “15.6.4 Calibrating rear overhead view camera R246 ”, page 207

15.6.1 Setting up and aligning calibration unit - VAS 6350- with calibration unit for overhead view camera - VAS 6350/6-

After performing service work on the vehicle it might be necessary to re-calibrate the overhead view camera system. This is required after:

- Renewal of one or more cameras
- Renewal of overhead view camera - J928- (all cameras must be re-calibrated)
- Repair work on components in which a camera is installed or which affect camera installation position
- Wheel alignment
- Misalignment in overlapping areas of individual camera images

If rear overhead view camera - J928- is renewed, all cameras must be re-calibrated.

Requirements for calibration

- Camera lenses must be clean. Clean.
- Check camera images on display unit for front information display and operating unit control unit - J685- . If the image is

Reproduction or disclosure to third parties or use for commercial purposes, in part or in whole, is not permitted unless authorised by AUDI AG. AUDI AG does not guarantee or accept any liability with respect to the correctness of information in this document. Copyright by AUDI AG.

affected by a damaged camera, renew this camera. If the image is not straight, check that this camera is properly secured.

- Both exterior mirrors must be folded out.
- Vehicle must be positioned on a firm and even surface.
- There must be sufficient space around the vehicle (at least 2 m).
- Parking brake must be activated.
- Steering wheel must be in centre position, wheels must be straight.
- On vehicles with air suspension, “auto” mode must be active and the running gear must have been set to normal air spring level using ⇒ Vehicle diagnostic tester.
- All doors and the rear lid must be closed.
- There must not be anyone inside the vehicle.
- Vehicle must not be loaded (unladen weight).
- The battery charger must be connected.
- The ignition must be switched on.
- The system must be active and must be being displayed on the display unit for front information display and operating unit control unit - J685- .
- Do not move vehicle during the calibration process.

If all cameras require calibration, they should be calibrated in the following order:

- Front overhead view camera - R243-
- Rear overhead view camera - R246-
- Left overhead view camera - R244-
- Right overhead view camera - R245-

Special tools and workshop equipment required

- Calibration unit - VAS 6350-

Protected by copyright. Copying for private or commercial purposes, in part or in whole is not permitted unless authorised by AUDI AG. AUDI AG does not guarantee or accept any liability with respect to the correctness of information in this document. Copyright by AUDI AG.

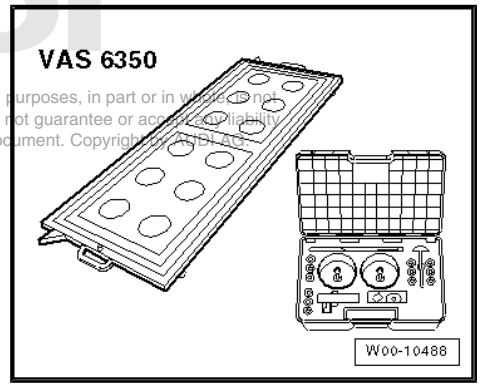

- Calibration unit for overhead view camera - VAS 6350/6-

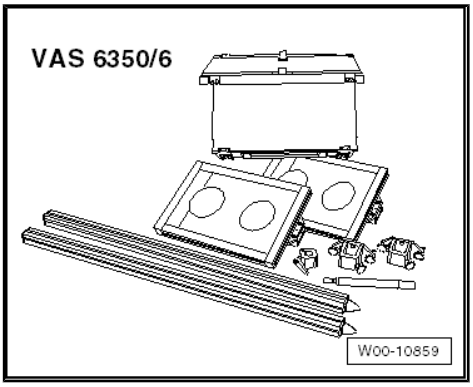

- ⇒ Vehicle diagnostic tester

The calibration unit - VAS 6350- consists of the following items:

- Calibration field
- Wheel centre mounting - VAS 6350/1-
- Spacing laser - VAS 6350/2-
- Linear laser - VAS 6350/3-

The calibration unit for overhead view camera - VAS 6350/6- consists of the following items:

- Support post with board (left-side) - VAS 6350/6-1-
- Support post with board (right-side) - VAS 6350/6-2-
- Post mounting (left-side) - VAS 6350/6-3-
- Post mounting (right-side) - VAS 6350/6-4-
- Guide pin - VAS 6350/6-5-
- Mounting for linear laser - VAS 6350/6-6-

Protected by copyright. Copying for private or commercial purposes, in part or in whole, is not permitted unless authorised by AUDI AG. AUDI AG does not guarantee or accept any liability with respect to the correctness of information in this document. Copyright by AUDI AG.

Setting up calibration unit - VAS 6350- with calibration unit for overhead view camera - VAS 6350/6-

Support post with board (left-side) - VAS 6350/6-1- and support post with board (right-side) - VAS 6350/6-2- must stand perpendicular to the ground.

– Move calibration field of calibration unit for overhead view camera - VAS 6350/6- to a horizontal position.

– To do so, turn plastic feet beneath calibration field of calibration unit - VAS 6350- to make air bubble in spirit level move exactly to centre of display -arrow-.

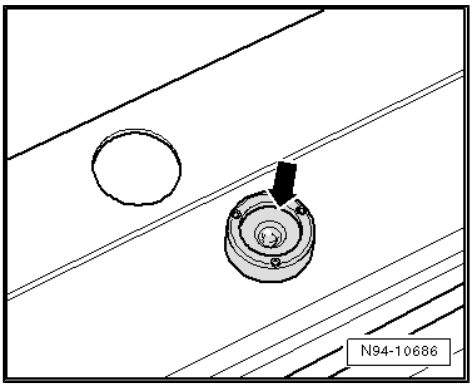

WARNING

Make sure no light is reflected on calibration unit for overhead view camera - VAS 6350/6- .

Reflected light impairs the view of the cameras and therefore it may be impossible to perform calibration.

– Align the support post with board (left-side) - VAS 6350/6-1- -1- and the support post with board (right-side) - VAS 6350/6-2- -2- with the scale of the calibration unit - VAS 6350- to -B- (77.5) on both sides.

– Align the height of the support post with board (left-side) - VAS 6350/6-1- -1- and the support post with board (right-side) - VAS 6350/6-2- -2- so that dimension -A- between the bottom edge of the black measurement field (NOT the aluminium frame) and the top surface of the calibration field of the calibration unit - VAS 6350- is 150 mm.

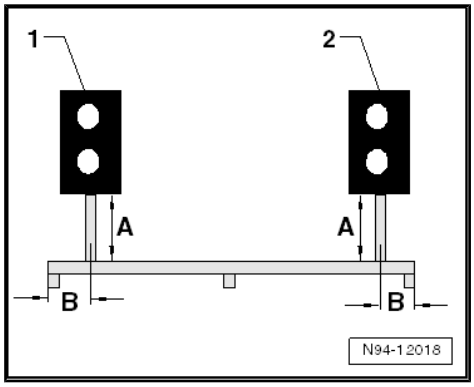

The brackets on the outside of the calibration field of the calibration unit - VAS 6350- must always be flush with the outer edge of the black line on the measurement field when distances are being measured.

Set up positions of calibration unit - VAS 6350- with calibration unit for overhead view camera - VAS 6350/6-

1 - Setup for calibration of front overhead view camera - R243-

Protected by copyright. Copying for private or commercial purposes, in part or in whole, is not permitted unless authorised by AUDI AG. AUDI AG does not guarantee or accept any liability with respect to the correctness of information in this document. Copyright by AUDI AG.

2 - Front overhead view camera - R243-

❑ Calibrating ⇒ page 199

3 - Right overhead view camera - R245-

❑ Calibrating ⇒ page 203

4 - Setup for calibration of right overhead view camera - R245-

5 - Rear overhead view camera - R246-

❑ Calibrating ⇒ page 207

6 - Setup for calibration of rear overhead view camera - R246-

7 - Setup for calibration of left overhead view camera - R244-

8 - Left overhead view camera - R244-

❑ Calibrating ⇒ page 203

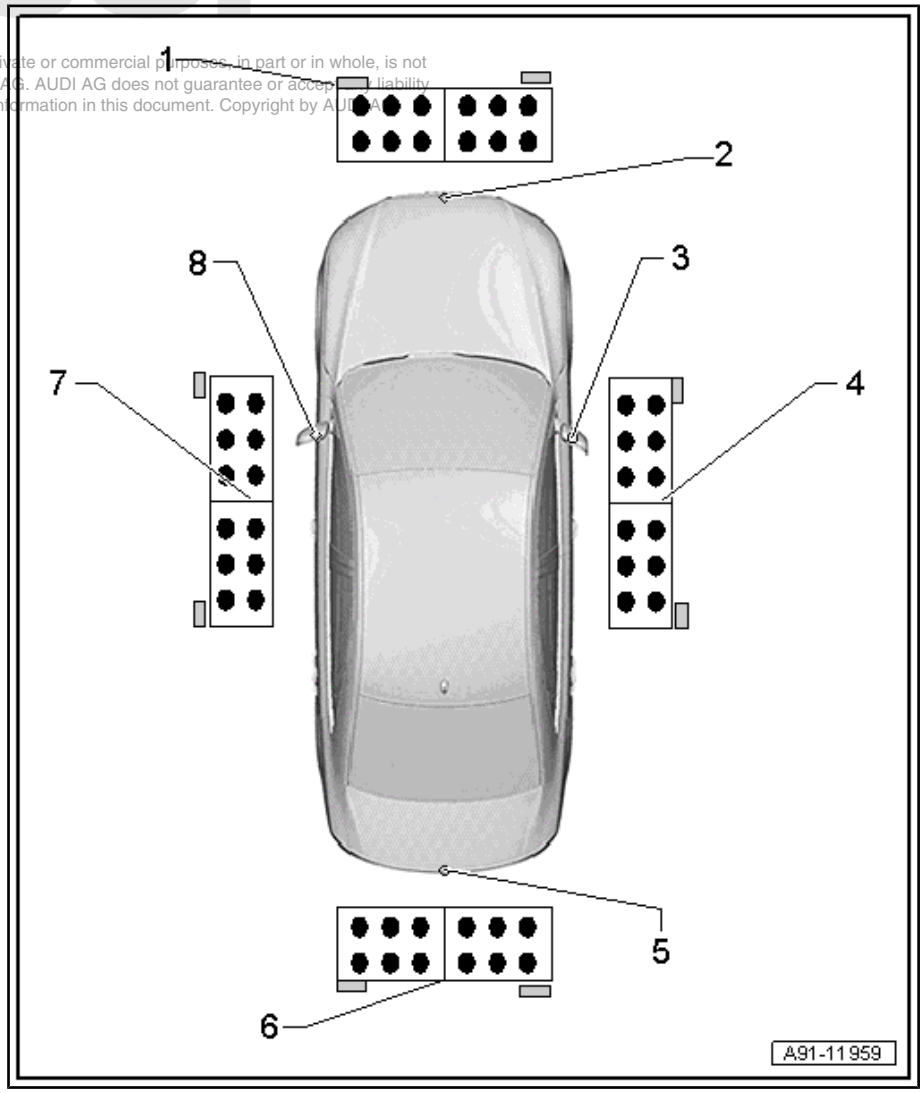

WARNING

Make sure no light is reflected on calibration unit for overhead view camera - VAS 6350/6- .

Reflected light impairs the view of the cameras and therefore it may be impossible to perform calibration.

15.6.2 Calibrating front overhead view camera - R243-

Front overhead view camera - R243- is fitted in bumper cover between Audi rings (between camera for night vision system - R212- and garage door operation control unit - J530-).

Special tools and workshop equipment required

- Calibration unit - VAS 6350-

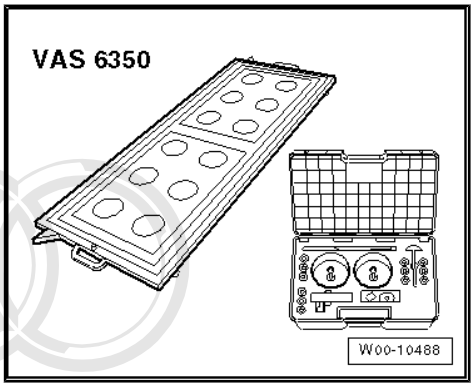

- Calibration unit for overhead view camera - VAS 6350/6-

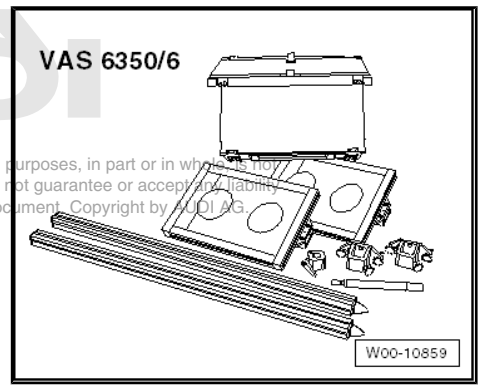

Protected by copyright. Copying for private or commercial purposes, in part or in whole, is not permitted unless authorised by AUDI AG. AUDI AG does not guarantee or accept any liability with respect to the correctness of information in this document. Copyright by AUDI AG.

- ⇒ Vehicle diagnostic tester

– Ensure requirements are met ⇒ page 195 .

– Set up and align calibration unit - VAS 6350- with calibration unit for overhead view camera - VAS 6350/6- ⇒ page 195 .

– Connect ⇒ Vehicle diagnostic tester.

Setting up calibration unit

Fit wheel centre mounting - VAS 6350/1- :

– Check bolt circle of wheels.

– Prepare wheel centre mountings - VAS 6350/1- as required.

– To do so, secure three wheel bolt adapters to each wheel centre mounting - VAS 6350/1- to match the hole circle.

– Position paddles on both wheel centre mountings - VAS 6350/1- and secure each paddle with clamping bolt.

– Fit wheel centre mountings - VAS 6350/1- onto wheel bolts on rear wheels.

The wheel centre mountings - VAS 6350/1- are kept in position by the O-rings in the adapters.

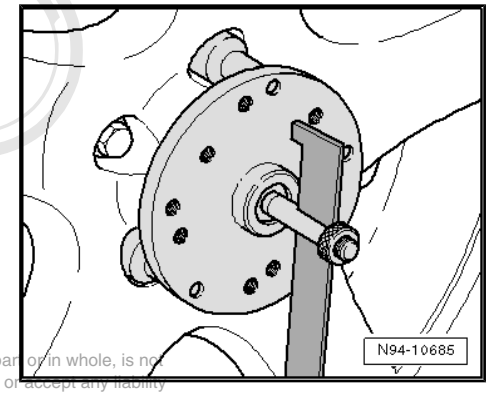

Note

When fitting the wheel centre mountings - VAS 6350/1- onto the wheels, make sure that they are not mounted on any "anti-theft" wheel bolts that might be installed.

– Use clamping bolts to adjust paddles so that they are free to move just slightly above the ground. Make sure the paddles can move freely.

Protected by copyright. Copying for private or commercial purposes, in part or in whole, is not permitted unless authorised by AUDI AG. AUDI AG does not guarantee or accept any liability with respect to the correctness of information. Copyright by AUDI AG.

Alignment of calibration unit - VAS 6350- with calibration unit for overhead view camera - VAS 6350/6- :

– After setting up calibration unit - VAS 6350- with calibration unit for overhead view camera - VAS 6350/6- -1-, position it centrally between 400 mm and 600 mm -dimension A- in front of the vehicle (in front of bumper cover).

– Move calibration unit - VAS 6350- with calibration unit for overhead view camera - VAS 6350/6- to a horizontal position.

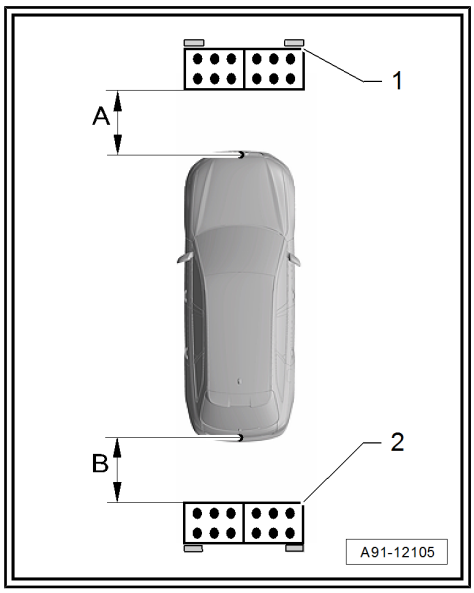

– To do so, turn plastic feet beneath calibration field of calibration unit - VAS 6350- to make air bubble in spirit level move exactly to centre of display -arrow-.

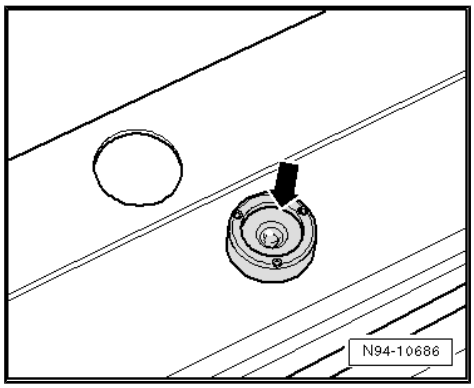

WARNING

Make sure no light is reflected on calibration unit for overhead view camera - VAS 6350/6- .

Reflected light impairs the view of the cameras and therefore it may be impossible to perform calibration.

– Secure linear laser - VAS 6350/3- -4- centrally at the location provided on the calibration unit for overhead view camera - VAS 6350/6- .

– Switch on linear laser - VAS 6350/3- -4- and align calibration field of calibration unit - VAS 6350- with calibration unit for overhead view camera - VAS 6350/6- so that laser beam shines onto centre of Audi rings on front of vehicle.

– Check whether Audi rings on front of vehicle are central. Re-adjust laser beam accordingly.

Measuring gap:

– Switch on spacing laser - VAS 6350/2- .

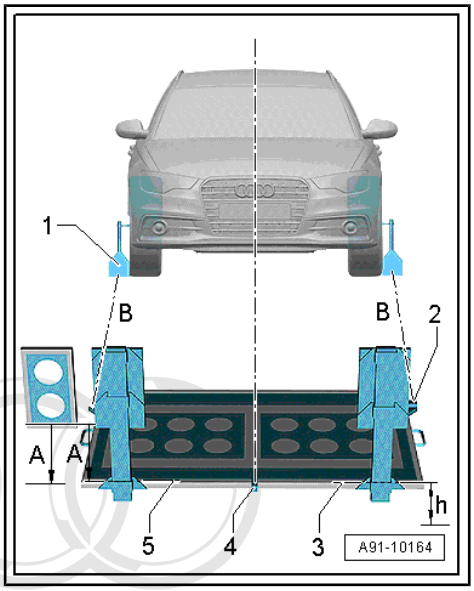

The following display will appear:

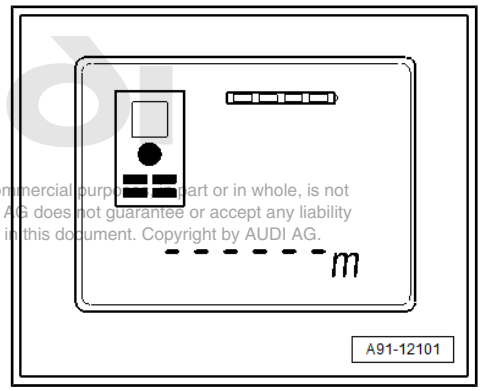

Protected by copyright. Copying for private or commercial purposes, in part or in whole, is not permitted unless authorised by AUDI AG. AUDI AG does not guarantee or accept any liability with respect to the correctness of information in this document. Copyright by AUDI AG.

The display will show how the spacing laser - VAS 6350/2- should be positioned. Press the appropriate key.

1 - Position at front edge

2 - Position at rear edge

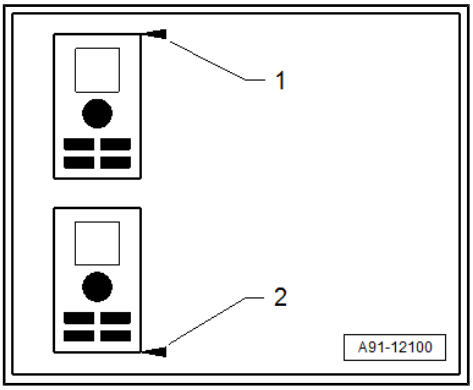

– Hold spacing laser - VAS 6350/2- -2- on one side of calibration field of calibration unit - VAS 6350- so that rear edge is flush at bracket. Spacing laser - VAS 6350/2- -2- must make firm contact with bracket.

– Briefly press the measurement button.

The laser will switch on.

– Make sure that laser beam from spacing laser - VAS 6350/2- -2- hits lower, larger part of paddle -1-.

If this is not the case, position of paddles must be corrected accordingly using clamping bolts on wheel centre mounting - VAS 6350/1- .

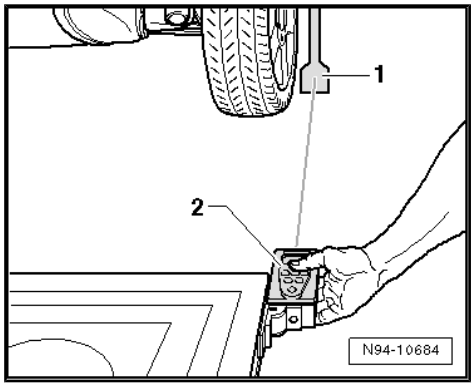

– Hold spacing laser - VAS 6350/2- in locating bracket on calibration field of calibration unit - VAS 6350- with one hand while laser beam is visible on paddle.

– Now press measurement button briefly to measure distance.

– Perform same measuring procedure for rear wheel on other side of calibration field of calibration unit - VAS 6350- .

Measured distance value must be identical on both sides.

If values are not identical:

– Adjust calibration unit - VAS 6350- with calibration unit for overhead view camera - VAS 6350/6- until values on both sides are identical.

When adjusting calibration unit - VAS 6350- with calibration unit for overhead view camera - VAS 6350/6- , make sure that linear laser - VAS 6350/3- on calibration unit for overhead view camera - VAS 6350/6- still hits centre of Audi rings and spirit level display also remains in the centre. Correct if necessary.

– Make a note of the dimension measured.

Measuring dimension -h-:

– Measure height of calibration unit - VAS 6350- -2- (dimension -h-) from top surface of calibration field of calibration unit - VAS 6350- -2- (not aluminium frame) to floor. Perform the measurement at the hole provided in the calibration field of the calibration unit - VAS 6350- -2-.

Ensure that spacing laser - VAS 6350/2- -1- is correctly adjusted (position at front edge).

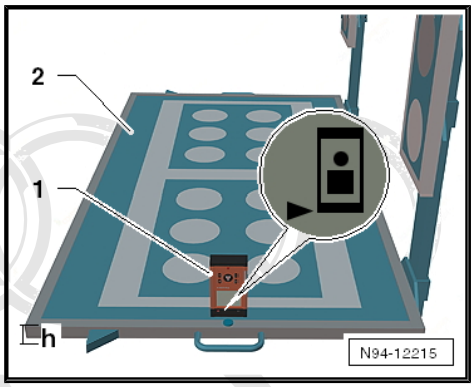

Protected by copyright. Copying for private or commercial purposes, in part or in whole, is not permitted unless authorised by AUDI AG. AUDI AG does not guarantee or accept any liability with respect to the correctness of information in this document. Copyright by AUDI AG.

The display will show how the spacing laser - VAS 6350/2- should be positioned. Press the appropriate key.

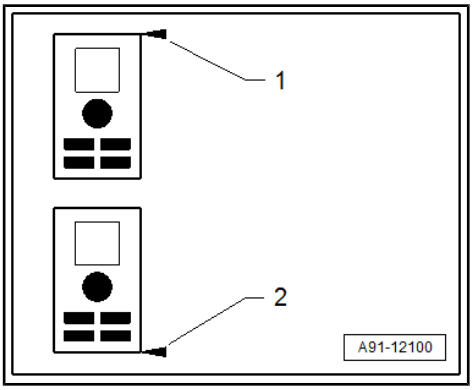

1 - Position at front edge

2 - Position at rear edge

Now enter measured distance value -h- and dimension in millimetres in ⇒ Vehicle diagnostic tester.

Performing calibration

⇒ Vehicle diagnostic tester is connected.

– Select `Diagnosis` mode and start diagnosis.

– Select `Test plan` tab.

– Select `Own test` then the following options one after the other:

- Body
- Electrical system
- 01 - Self-diagnosis compatible systems
- 6C - Control unit for overhead view camera | J928
- 6C - Control unit for overhead view camera, functions
- 6C - Calibration (Rep. gr. 91)

Further assistance is given by ⇒ Vehicle diagnostic tester during calibration procedure.

> ⚠ **WARNING**
>
> *Make sure no light is reflected on calibration unit for overhead view camera - VAS 6350/6- .*
>
> *Reflected light impairs the view of the cameras and therefore it may be impossible to perform calibration.*

15.6.3 Calibrating left overhead view camera - R244- / right overhead view camera - R245-

Left overhead view camera - R244- and right overhead view camera - R245- are installed in left and right exterior mirror respectively.

Copyright by AUDI AG. Any reproduction or transmission of these documents, in part or in whole, is not permitted without the written consent of AUDI AG. AUDI AG does not guarantee or accept any liability with respect to the correctness of information in this document. Copyright by AUDI AG.

The following describes the calibration process for the left overhead view camera - R244- . The calibration process for the right overhead view camera - R245- is similar.

Special tools and workshop equipment required

♦ Calibration unit - VAS 6350-

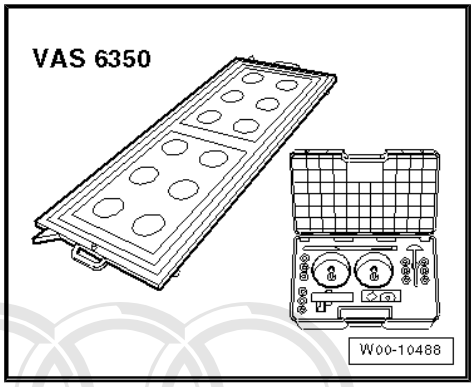

♦ Calibration unit for overhead view camera - VAS 6350/6-

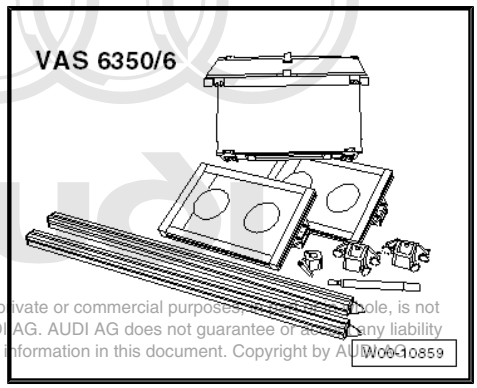

Protected by copyright. Copying for private or commercial purposes, in whole, is not permitted unless authorised by AUDI AG. AUDI AG does not guarantee or assume any liability with respect to the correctness of information in this document. Copyright by AUDI AG.

♦ ⇒ Vehicle diagnostic tester

– Ensure requirements are met ⇒ page 195 .

– Set up and align calibration unit - VAS 6350- with calibration unit for overhead view camera - VAS 6350/6- ⇒ page 195 .

– Connect ⇒ Vehicle diagnostic tester.

Setting up calibration unit

Fit wheel centre mounting - VAS 6350/1- :

– Check bolt circle of wheels.

– Prepare wheel centre mountings - VAS 6350/1- as required. Use spacers.

– To do so, secure three wheel bolt adapters to wheel centre mounting - VAS 6350/1- to match the hole circle.

– Position paddle on wheel centre mounting - VAS 6350/1- and secure paddle with clamping bolt.

– Fit wheel centre mounting - VAS 6350/1- onto wheel bolts on front left wheel.

The wheel centre mounting - VAS 6350/1- is kept in position and secured by the O-rings in the adapters.

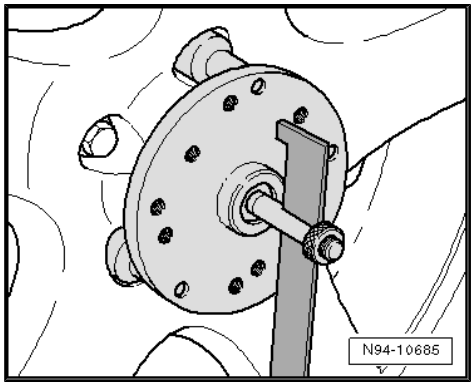

Note

When fitting the wheel centre mounting - VAS 6350/1- onto the wheel, make sure that it is not mounted on any anti-theft wheel bolts that might be installed.

– After setting up the calibration unit - VAS 6350- with calibration unit for overhead view camera - VAS 6350/6- -4-, position it next to the vehicle.

– Using clamping bolt, adjust paddle -2- so that it can move freely slightly above calibration field of calibration unit - VAS 6350- -4-.

Fitting linear laser - VAS 6350/3- :

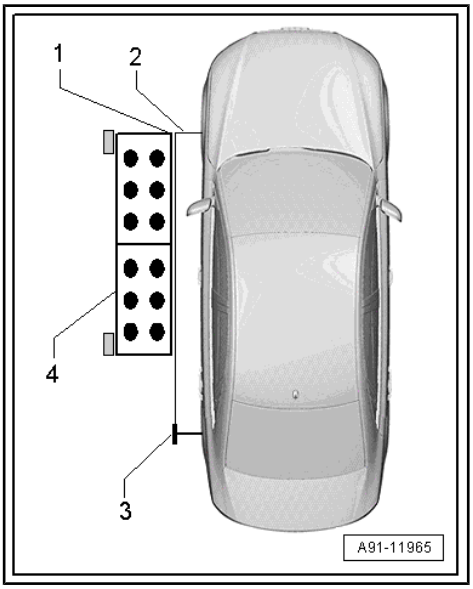

Protected by copyright. Copying for private or commercial purposes, in part or in whole, is not permitted unless authorised by AUDI AG. AUDI AG does not guarantee or accept any liability with respect to the correctness of information. Copyright by AUDI AG.

– Use ratchet (3/8-inch) to screw guide pin - VAS 6350/6-5- -2- into rear left wheel as far as stop and fit mounting for linear laser - VAS 6350/6-6- together with linear laser - VAS 6350/3- -1-.

– Slide mounting for linear laser - VAS 6350/6-6- so that outer edge of guide pin - VAS 6350/6-5- is flush with outer edge of laser housing -arrow- and pull lever tight.

Alignment of calibration unit - VAS 6350- with calibration unit for overhead view camera - VAS 6350/6- :

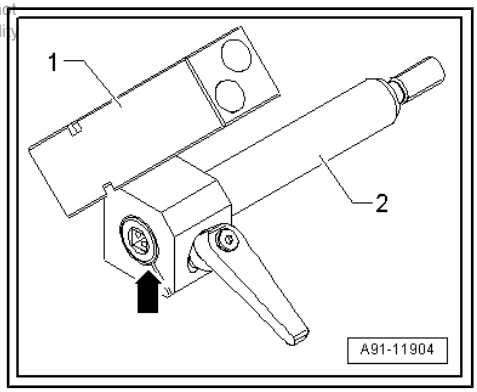

– Switch on linear laser - VAS 6350/3- -3- and adjust laser beam forwards in direction of wheel centre mounting - VAS 6350/1- -2- so that a line appears on calibration field of calibration unit - VAS 6350- -4-.

– Align calibration field of calibration unit - VAS 6350- -4- so that outer side of black line along length of calibration field of calibration unit - VAS 6350- -4- is located exactly on laser beam.

– Align calibration field of calibration unit - VAS 6350- -4- so that outer side of black line -1- aligns exactly with hanging paddle on wheel centre mounting - VAS 6350/1- -2-.

– Move calibration unit - VAS 6350- with calibration unit for overhead view camera - VAS 6350/6- to a horizontal position.

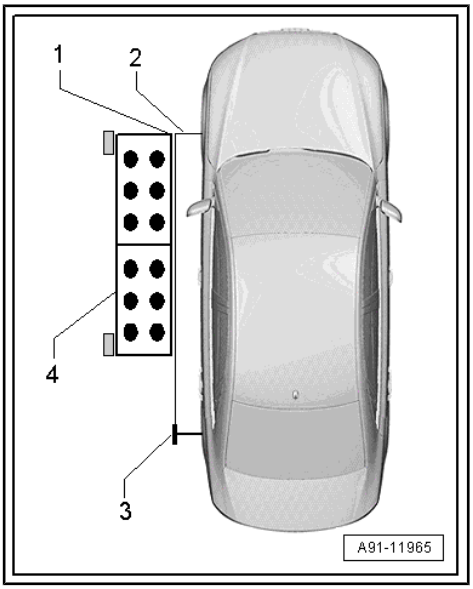

– To do so, turn plastic feet beneath calibration field of calibration unit - VAS 6350- to make air bubble in spirit level move exactly to centre of display -arrow-.

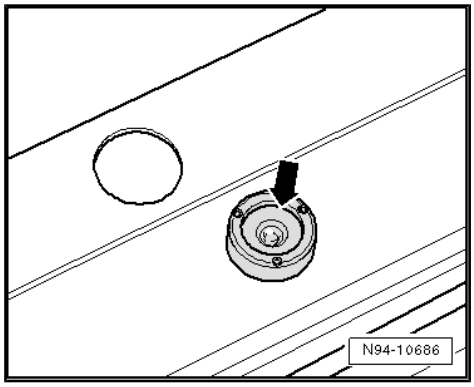

WARNING

Make sure no light is reflected on calibration unit for overhead view camera - VAS 6350/6- .

Reflected light impairs the view of the cameras and therefore it may be impossible to perform calibration.

Measuring dimension -h-:

– Measure height of calibration unit - VAS 6350- -2- (dimension -h-) from top surface of calibration field of calibration unit - VAS 6350- -2- (not aluminium frame) to floor. Perform the measurement at the hole provided in the calibration field of the calibration unit - VAS 6350- -2-.

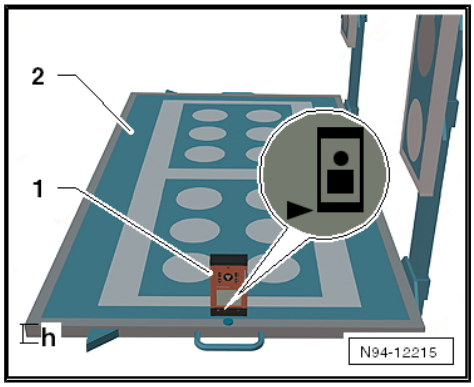

Ensure that spacing laser - VAS 6350/2- -1- is correctly adjusted (position at front edge).

Protected by copyright. Copying for private or commercial purposes, in part or in whole, is not permitted unless authorised by AUDI AG. AUDI AG does not guarantee or accept any liability with respect to the correctness of information in this document. Copyright by AUDI AG.

The display will show how the spacing laser - VAS 6350/2- should be positioned. Press the appropriate key.

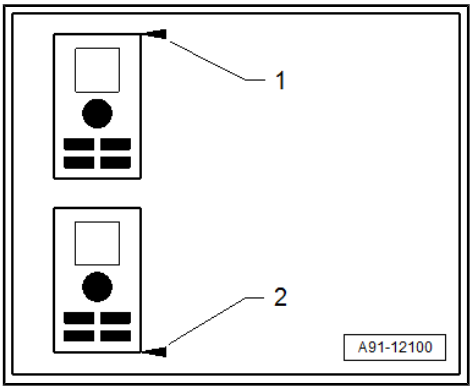

1 - Position at front edge

2 - Position at rear edge

Now enter measured distance value -h- and dimension in millimetres in ⇒ Vehicle diagnostic tester.

Performing calibration

⇒ Vehicle diagnostic tester is connected.

– Select `Diagnosis` mode and start diagnosis.

– Select `Test plan` tab.

– Select `Own test` then the following options one after the other:

- Body
- Electrical system
- 01 - Self-diagnosis compatible systems
- 6C - Control unit for overhead view camera | J928
- 6C - Control unit for overhead view camera, functions
- 6C - Calibration (Rep. gr. 91)

Further assistance is given by ⇒ Vehicle diagnostic tester during calibration procedure.

> ⚠ **WARNING**
>
> *Make sure no light is reflected on calibration unit for overhead view camera - VAS 6350/6- .*
>
> *Reflected light impairs the view of the cameras and therefore it may be impossible to perform calibration.*

15.6.4 Calibrating rear overhead view camera - R246-

Protected by copyright. Copying for private or commercial purposes, in part or in whole, is not permitted unless authorised by AUDI AG. AUDI AG does not guarantee or accept any liability with respect to the correctness of information in this document. Copyright by AUDI AG.

Rear overhead view camera - R246- is installed in handle in rear lid.

Special tools and workshop equipment required

- Calibration unit - VAS 6350-

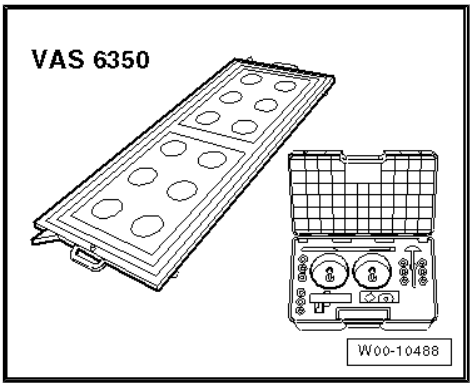

Protected by copyright. Copying for private or commercial purposes, in part or in whole, is not permitted unless authorised by AUDI AG. AUDI AG does not guarantee or accept any liability with respect to the correctness of information in this document. Copyright by AUDI AG

♦ Calibration unit for overhead view camera - VAS 6350/6-

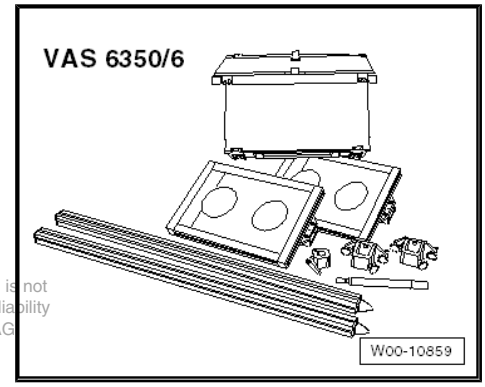

♦ ⇒ Vehicle diagnostic tester

– Ensure requirements are met ⇒ page 195 .

– Set up and align calibration unit - VAS 6350- with calibration unit for overhead view camera - VAS 6350/6-
⇒ “15.6.1 Setting up and aligning calibration unit VAS 6350 with calibration unit for overhead view camera VAS 6350/6 ”, page 195 .

– Connect ⇒ Vehicle diagnostic tester.

Setting up calibration unit

Fit wheel centre mounting - VAS 6350/1- :

– Check bolt circle of wheels.

– Prepare wheel centre mountings - VAS 6350/1- as required. Use spacers.

– To do so, secure three wheel bolt adapters to each wheel centre mounting - VAS 6350/1- to match the hole circle.

– Position paddles on both wheel centre mountings - VAS 6350/1- and secure each paddle with clamping bolt.

– Fit wheel centre mountings - VAS 6350/1- onto wheel bolts on rear wheels.

The wheel centre mountings - VAS 6350/1- are kept in position by the O-rings in the adapters.

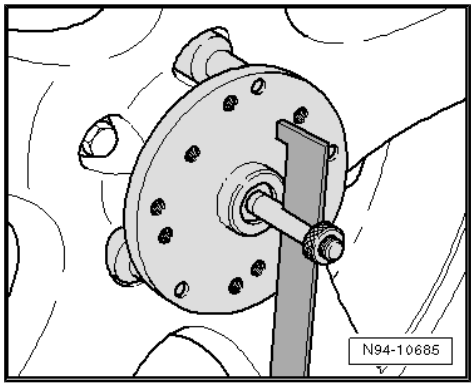

Note

When fitting the wheel centre mountings - VAS 6350/1- onto the wheels, make sure that they are not mounted on any “anti-theft” wheel bolts that might be installed.

– Use clamping bolts to adjust paddles so that they are free to move just slightly above the ground. Make sure the paddles can move freely.

Alignment of calibration unit - VAS 6350- with calibration unit for overhead view camera - VAS 6350/6- :

– After setting up calibration unit - VAS 6350- with calibration unit for overhead view camera - VAS 6350/6- -2-, position it centrally between 400 mm and 600 mm -dimension B- at rear of the vehicle (behind rear bumper cover).

– Move calibration field of calibration unit - VAS 6350- to a horizontal position.

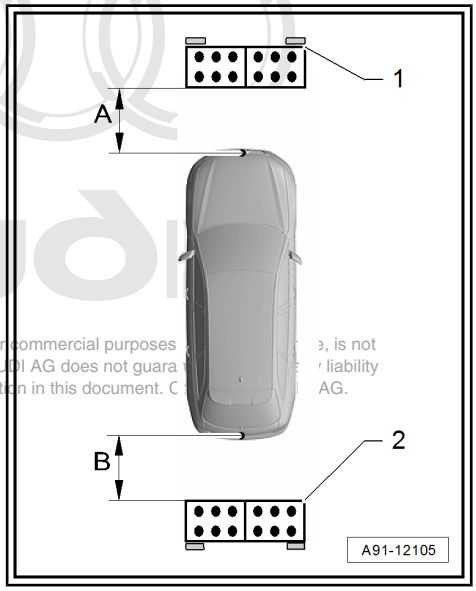

Protected by copyright. Copying for private or commercial purposes, is not permitted unless authorised by AUDI AG. AUDI AG does not guarantee liability with respect to the correctness of information in this document. ©
AG.

– To do so, turn plastic feet beneath calibration field of calibration unit - VAS 6350- to make air bubble in spirit level move exactly to centre of display -arrow-.

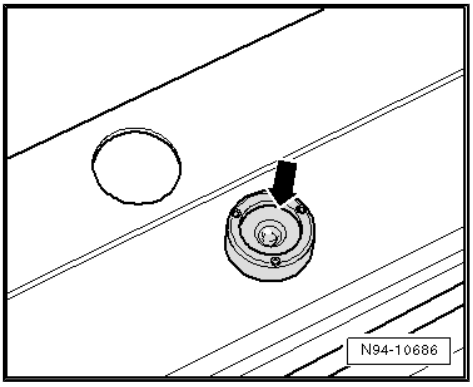

> ⚠ WARNING
>
> *Make sure no light is reflected on calibration unit for overhead view camera - VAS 6350/6- .*
>
> *Reflected light impairs the view of the cameras and therefore it may be impossible to perform calibration.*

– Secure linear laser - VAS 6350/3- -4- centrally at the location provided on the calibration field of calibration unit - VAS 6350- .

– Switch on linear laser - VAS 6350/3- -4- on calibration field of calibration unit - VAS 6350- and align entire calibration unit - VAS 6350- with calibration unit for overhead view camera - VAS 6350/6- so that beam of linear laser - VAS 6350/3- shines onto centre of Audi rings on rear of vehicle.

– Check whether Audi rings on back of vehicle are central. Readjust laser beam accordingly.

Measuring gap:

– Switch on spacing laser - VAS 6350/2- .

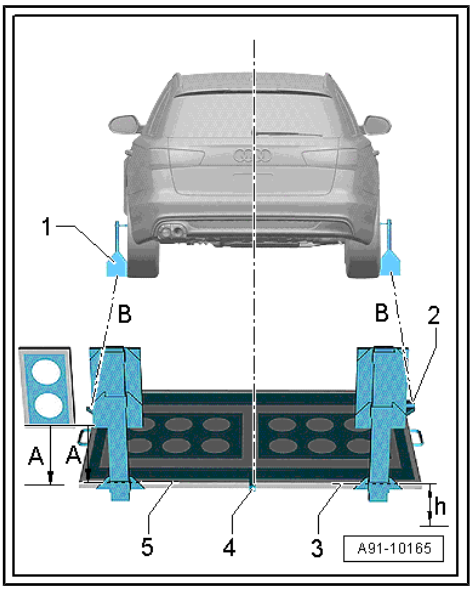

The following display will appear:

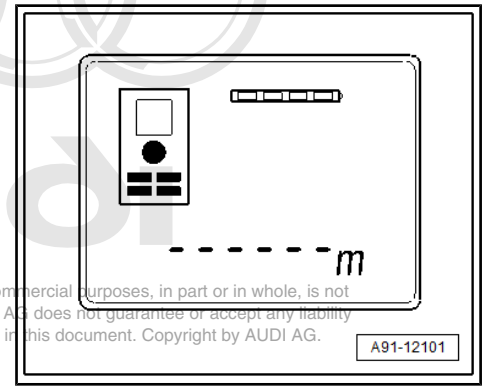

Protected by copyright. Copying for private or commercial purposes, in part or in whole, is not permitted unless authorised by AUDI AG. AUDI AG does not guarantee or accept any liability with respect to the correctness of information in this document. Copyright by AUDI AG.

The display will show how the spacing laser - VAS 6350/2- should be positioned. Press the appropriate key.

1 - Position at front edge

2 - Position at rear edge

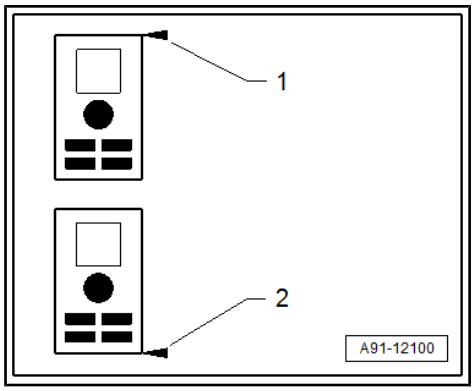

– Hold spacing laser - VAS 6350/2- -2- on one side of calibration unit - VAS 6350- so that rear edge is flush at bracket. Spacing laser - VAS 6350/2- -2- must make firm contact with bracket.

– Briefly press the measurement button.

The laser will switch on.

– Make sure that laser beam from spacing laser - VAS 6350/2- -2- hits lower, larger part of paddle -1-.

If this is not the case, position of paddles must be corrected accordingly using clamping bolts on wheel centre mounting - VAS 6350/1- .

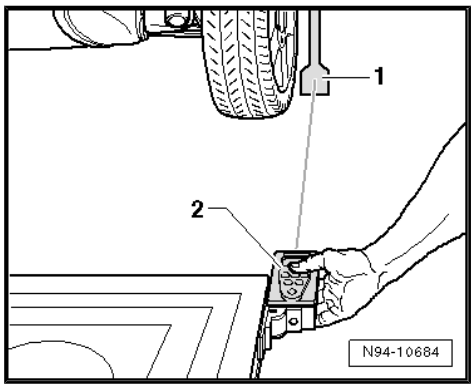

– Hold spacing laser - VAS 6350/2- in locating bracket on calibration unit - VAS 6350- with one hand while laser beam is visible on paddle.

– Now press measurement button briefly to measure distance.

– Perform same measuring procedure for rear wheel on other side of calibration unit - VAS 6350- .

Measured distance value must be identical on both sides.

If values are not identical:

– Adjust calibration field of calibration unit - VAS 6350- until values on both sides are identical.

When adjusting calibration field of calibration unit - VAS 6350- , make sure that linear laser - VAS 6350/3- on calibration unit - VAS 6350- still hits centre of Audi rings and spirit level display also remains in the centre. Correct if necessary.

– Make a note of the dimension measured.

Measuring dimension -h-:

– Measure height of calibration unit - VAS 6350- -2- (dimension -h-) from top surface of calibration field of calibration unit - VAS 6350- -2- (not aluminium frame) to floor. Perform the measurement at the hole provided in the calibration field of the calibration unit - VAS 6350- -2-.

Ensure that spacing laser - VAS 6350/2- -1- is correctly adjusted (position at front edge).

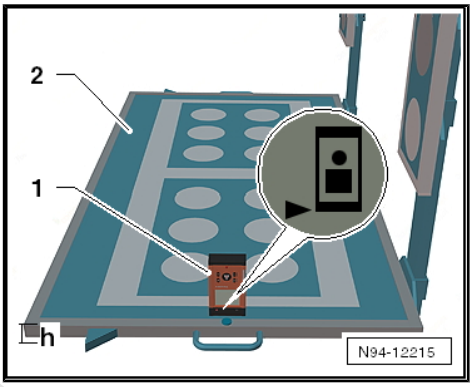

The display will show how the spacing laser - VAS 6350/2- should be positioned. Press the appropriate key.

1 - Position at front edge

2 - Position at rear edge

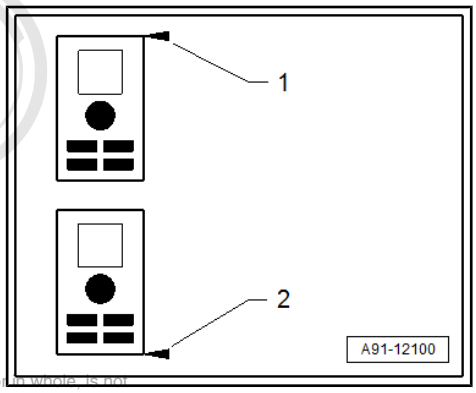

Now enter measured distance value -h- and dimension in millimetres in ⇒ Vehicle diagnostic tester.

Performing calibration

⇒ Vehicle diagnostic tester is connected.

– Select `Diagnosis` mode and start diagnosis.

– Select `Test plan` tab.

– Select `Own test` then the following options one after the other:

- Body
- Electrical system
- 01 - Self-diagnosis compatible systems
- 6C - Control unit for overhead view camera | J928
- 6C - Control unit for overhead view camera, functions
- 6C - Calibration (Rep. gr. 91)

Further assistance is given by ⇒ Vehicle diagnostic tester during calibration procedure.

Protected by copyright. Copying for private or commercial purposes, in part or in whole, is not permitted unless authorised by AUDI AG. AUDI AG does not guarantee or accept any liability with respect to the correctness of information in this document. Copyright by AUDI AG.

WARNING

Make sure no light is reflected on calibration unit for overhead view camera - VAS 6350/6- .

Reflected light impairs the view of the cameras and therefore it may be impossible to perform calibration.

15.7 Pin assignment for control unit for overhead view camera - J928-

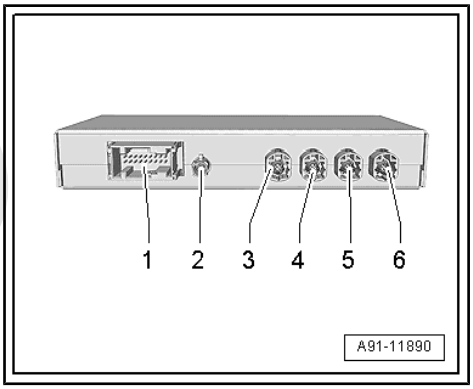

Control unit for overhead view camera - J928-

1 - 18-pin connector - T18f-

2 - FBAS output (T2lt) to control unit 1 for information electronics - J794-

3 - FBAS input (T5av) from left overhead view camera - R244-

4 - FBAS input (T5aw) from right overhead view camera - R245-

5 - FBAS input (T5ax) from front overhead view camera - R243-

6 - FBAS input (T5ay) from rear overhead view camera - R246-

Note

Protected by copyright. Copying for private or commercial purposes, in part or in whole, is not permitted unless authorised by AUDI AG. AUDI AG does not guarantee or accept any liability with respect to the correctness of information in this document. Copyright by AUDI AG.

Contacts which are not listed are not used.

1 - 18-pin connector - T18f-

1 - Terminal 30

2 - CAN bus High, convenience

10 - CAN bus Low, convenience

12 - Terminal 31

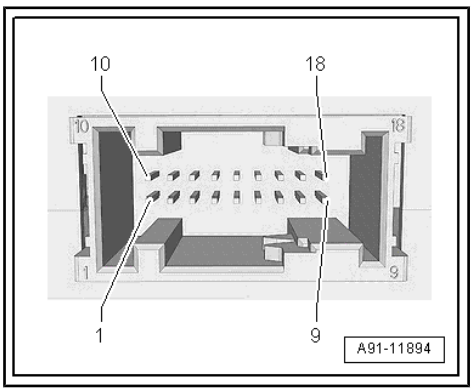

FBAS input

1 - Power

2 - LVDS (–)

3 - LIN
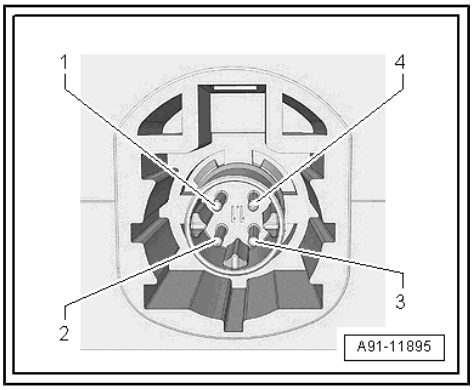
4 - LVDS (+)