Workshop Manual

Audi A8 2003 ➤

General body repairs, interior

Edition 07.2011

Protected by copyright. Copying for private or commercial purposes, in part or in whole, is not permitted unless authorised by AUDI AG. AUDI AG does not guarantee or accept any liability with respect to the correctness of information in this document. Copyright by AUDI AG.

List of Workshop Manual Repair GroupsList of Workshop Manual Repair GroupsList of Workshop Manual Repair Groups

Repair Group

00 - Technical data
68 - Interior equipment
69 - Passenger protection
70 - Trim, insulation
72 - Seat frames
74 - Seat - padding, covers
76 - Gas, water, electricity

Protected by copyright. Copying for private or commercial purposes, in part or in whole, is not permitted unless authorised by AUDI AG. AUDI AG does not guarantee or accept any liability with respect to the correctness of information in this document. Copyright by AUDI AG.

Technical information should always be available to the foremen and mechanics, because their careful and constant adherence to the instructions is essential to ensure vehicle road-worthiness and safety. In addition, the normal basic safety precautions for working on motor vehicles must, as a matter of course, be observed.

All rights reserved.
No reproduction without prior agreement from publisher.

Copyright © 2011 Audi AG, Ingolstadt

A0051006120

Contents

00 - Technical data . . . 1
1 Routing and attaching pipes/hoses and wiring . . . 1
2 Contact corrosion . . . 2

68 - Interior equipment . . . 3
1 Shelves / trim panels . . . 3
1.1 Exploded view of glove box/knee bolster . . . 4
1.2 Removing and installing glove box/knee bolster . . . 5
1.3 Removing and installing glove box lid . . . 7
1.4 Removing and installing cushioning mechanism for glove box lid/knee bolster . . . 9
1.5 Exploded view of storage compartment/knee bolster (driver's side) . . . 9
1.6 Removing and installing storage compartment/knee bolster (driver's side) . . . 10
1.7 Removing storage box from storage compartment and installing . . . 11
1.8 Removing and installing steering column trim . . . 12
1.9 Removing and installing coin holder . . . 13
2 Removing and installing centre console without extension . . . 16
2.1 Centre console without extension - overview of fitting locations . . . 17
2.2 Exploded view of centre console without extension . . . 18
2.3 Removing and installing centre console . . . 19
2.4 Removing and installing floor covering rod (rear and front) . . . 29
2.5 Removing and installing air conditioner operating unit (front) . . . 29
2.6 Removing and installing ashtray (front) . . . 31
2.7 Renewing trim for ashtray (front) . . . 32
2.8 Removing and installing cigarette lighter (front) . . . 33
2.9 Removing and installing trim for centre console with multimedia operating unit . . . 33
2.10 Removing and installing front centre console cup holder . . . 34
2.11 Removing and installing rear vent (2-zone climate control) . . . 35
2.12 Removing and installing trim for rear centre console (rear vent, 2-zone climate control) . . . 37
2.13 Removing and installing rear cigarette lighter (rear vent, 2-zone climate control) . . . 37
2.14 Removing and installing storage compartment (rear) . . . 38
2.15 Renewing trim for storage compartment (rear) . . . 38
2.16 Removing and installing centre console storage compartment (one-piece centre armrest) . . . 39
2.17 Removing and installing centre console storage compartment (split centre armrest) . . . 39
2.18 Removing and installing rear vent (4-zone climate control) . . . 41
2.19 Removing and installing rear air conditioner operating unit (4-zone climate control) . . . 43
2.20 Removing and installing rear cigarette lighter (rear vent, 4-zone climate control) . . . 44
2.21 Removing and installing trim for rear centre console (rear vent, 4-zone climate control) . . . 44
2.22 Removing and installing rear air distributor and rear air duct (2 and 4-zone climate control) . . . 45
2.23 Removing and installing rear vent warm air and cold air flap control motor (left-side/right-side) . . . 46
2.24 Removing and installing rear centre console temperature sensor (left-side/right-side) . . . 47
2.25 Removing and installing centre console bracket, centre armrest bracket and bracket for air conditioner operating unit/ashtray (front) . . . 47
3 Removing and installing centre console with extension . . . 49
3.1 Centre console with extension - overview of fitting locations . . . 49
3.2 Exploded view of centre console with extension . . . 50
3.3 Removing and installing centre console with extension . . . 51
3.4 Removing and installing extension for centre console . . . 59
3.5 Removing and installing cup holder unit with small storage compartment lid . . . 61
3.6 Removing and installing small storage compartment . . . 61
3.7 Removing and installing lid for cup holder and small storage compartment . . . 62

Protected by copyright. Copying for private or commercial purposes, in part or in whole, is not permitted unless authorised by AUDI AG. AUDI AG does not guarantee or accept any liability with respect to the correctness of information in this document. Copyright by AUDI AG.

3.8 Removing and installing frame for cup holder unit with small storage compartment lid 62
3.9 Removing and installing large storage compartment 63
3.10 Removing and installing sliding cover for large storage compartment 64
3.11 Removing and installing sockets in large storage compartment 64
3.12 Removing and installing bracket for centre console extension 65
3.13 Bracket for centre console extension (front) 67
3.14 Bracket for centre console extension (rear) 68
3.15 Removing and installing rear air distributor and rear air duct 68
3.16 Removing and installing intermediate piece for air duct 70
3.17 Removing and installing rear vent and rear Climatronic operating and display unit 71
3.18 Removing and installing centre console storage compartment (split centre armrest) 72
4 Front centre armrest (one-piece) 75
4.1 Removing and installing centre armrest (one-piece) 75
4.2 Dismantling and assembling centre armrest (one-piece) 77
4.3 Removing and installing bracket for centre armrest 78
4.4 Removing and installing centre armrest stop 79
4.5 Removing and installing carrier for centre armrest 80
4.6 Removing and installing padding for centre armrest (one-piece) 81
4.7 Removing and installing cover panel for centre armrest (one-piece) 82
4.8 Removing and installing gas strut for centre armrest 82
5 Front centre armrest (split) 84
5.1 Removing and installing centre armrest (split) 84
5.2 Removing and installing lower support (split centre armrest) 85
5.3 Dismantling and assembling centre armrest (split) 86
5.4 Removing and installing cover panel for centre armrest (split) 87
5.5 Removing and installing padding for centre armrest (split) 87
5.6 Removing and installing split centre armrest storage compartment 88
5.7 Removing and installing lower cover panel for centre armrest (split) 88
5.8 Removing and installing trim 89
5.9 Removing and installing storage compartment light 90
5.10 Separating centre armrest (split) 90
6 Interior mirror 92
6.1 Removing and installing interior mirror 92
6.2 Checking operation of automatic anti-dazzle interior mirror 93

69 - Passenger protection 94
1 Safety regulations and test methods for pyrotechnic, electrical and mechanical components of the restraint system 94
1.1 General safety regulations 95
1.2 Storage, transportation and disposal of airbag, belt tensioner and battery isolator units (pyrotechnic components) 96
1.3 Additional safety regulations for side airbag 97
1.4 Additional safety regulations for curtain airbag 97
1.5 Safety regulations for crash sensors (pressure sensors) for front side airbag 98
1.6 Additional safety regulations for working on seat occupied sensor for front passenger's airbag deactivation - country-specific 98
1.7 Procedure for dealing with seat occupied sensor for front passenger's airbag deactivation following a crash - country-specific 99
1.8 Replacing pyrotechnic, electrical and mechanical components of restraint system following an accident 99
1.9 Checking airbag fastening elements following an accident 101
1.10 Accident not involving airbag triggering 101
1.11 Checking seat belts 102
1.12 Checking webbing 102
1.13 Checking automatic belt retractor (locking action) 103
1.14 Visual inspection of buckle 104

Protected by copyright. Copying for private or commercial purposes, in part or in whole, is not permitted unless authorised by AUDI AG. AUDI AG does not make any representation or guarantee or accept any liability with respect to the correctness of information in this document. Copyright by AUDI AG.

1.15 Functional test of buckle . . . 104
1.16 Checking guide fittings and latch plate . . . 104
1.17 Checking fastening elements and anchorage points following an accident . . . 104
1.18 Checking child seat restraint function for additional child seats (not for driver's seat belt) - country-specific . . . 105
1.19 Checking child seat anchors after an accident (Isofix, Top Tether) . . . 105
1.20 Checking belt-fastened sensor for rear three-point seat belts with belt tensioner . . . 105

2 Seat belts . . . 106
2.1 Seat belt anchorage points (block diagram) . . . 106
2.2 Outer floor panel anchorage point . . . 107
2.3 Removing and installing three-point seat belt . . . 107
2.4 Removing and installing belt height adjuster . . . 109
2.5 Removing and installing rear three-point seat belt . . . 109
2.6 Removing and installing third rear three-point seat belt (fixed rear seat backrest) . . . 111
2.7 Removing and installing rear outer floor panel anchorage point . . . 113
2.8 Removing and installing rear outer floor panel anchorage point with electrically operated individual seats . . . 114
2.9 Centre floor panel anchorage points . . . 114
2.10 Removing and installing centre floor panel anchorage points (buckle) with electrically operated individual seats . . . 116
2.11 Replacing belt buckle . . . 116
2.12 Replacing buckle for seat-occupied sensor for front passenger's airbag deactivation (country-specific) . . . 116

3 Servicing airbag . . . 118
3.1 General view of fitting locations . . . 118
3.2 Removing and installing airbag control unit (J 234) . . . 119
3.3 Removing and installing battery cut-off relay J655 . . . 120
3.4 Removing and installing battery isolation igniter N253 . . . 121

4 Servicing driver side airbag N95 . . . 123
4.1 Removing and installing driver side airbag unit N95 . . . 123
4.2 Removing and installing steering wheel . . . 126
4.3 Removing and installing airbag coil connector and return ring with slip ring F138 . . . 128

5 Servicing front passenger side airbag N131 . . . 130
5.1 Removing and installing front passenger side airbag N131 . . . 130
5.2 Removing and installing key operated switch to deactivate front passenger side airbag E224 . . . 132
5.3 Service installation of key operated switch to deactivate front passenger side airbag E224 . . . 133
5.4 Removing and installing „PASSENGER AIRBAG OFF“ lamp K145 . . . 134

6 Servicing side airbags . . . 135
6.1 Removing and installing front side airbag . . . 135
6.2 Removing and installing rear side airbag . . . 137
6.3 Removing and installing rear side airbag (individual electrically operated rear seat) . . . 139

7 Servicing curtain airbag . . . 142
7.1 Removing and installing curtain airbag . . . 142
7.2 Removing and installing rear deformation element (Saloon) . . . 144
7.3 Removing and installing rear deformation element (vehicles with long wheelbase) . . . 145
7.4 Removing and installing front deformation element . . . 147

8 Removing and installing knee airbag . . . 149
8.1 Removing and installing driver's knee airbag . . . 149
8.2 Removing and installing front passenger's knee airbag . . . 150
8.3 Removing and installing deformation element for driver's knee airbag . . . 152
8.4 Removing and installing deformation element for front passenger's knee airbag . . . 154

9 Servicing seat-occupied sensor for front passenger's airbag deactivation (country-specific) . . . 156
9.1 Removing and installing seat occupied sensor . . . 156

Protected by copyright. Copying for private or commercial purposes, in part or in whole, is not permitted unless authorised by AUDI AG. AUDI AG does not guarantee or accept any liability with respect to the correctness of information in this document. Copyright by AUDI AG.

9.2 Replacing rigid foam inserts . . . 161
10 Deactivation of rear side airbag with fixed backrest . . . 162
10.1 Deactivation . . . 162
10.2 Activation . . . 162
11 Deactivation of rear side airbag with individual electrically operated rear seats . . . 164
11.1 Deactivation . . . 164
11.2 Activation . . . 164
12 Servicing airbag crash sensors . . . 166
12.1 Removing and installing front airbag crash sensor . . . 166
12.2 Removing and installing front side airbag crash sensor . . . 168
12.3 Removing and installing rear side airbag (curtain airbag) crash sensor . . . 169
13 Removing and installing ISOFIX holder . . . 171
13.1 Rear ISOFIX holder with fixed rear seat backrest . . . 171
13.2 Removing and installing rear ISOFIX holder with electrically operated individual seats . . . 173
14 Child seat anchor (USA, Canada) . . . 174
14.1 Removing and installing child seat anchor . . . 174

70 - Trim, insulation . . . 175

1 Front door trim panels . . . 175
1.1 Exploded view of fitting locations . . . 175
1.2 Exploded view of door trim cable routing . . . 176
1.3 Removing and installing front door trim . . . 176
1.4 Removing and installing trim panel . . . 178
1.5 Replacing front door trim decorative trim . . . 178
1.6 Removing and installing insulation . . . 181
1.7 Removing and installing armrest . . . 182
1.8 Removing and installing window regulator switch module . . . 183
1.9 Dismantling armrest . . . 183
1.10 Removing and installing mirror adjustment switch . . . 184
1.11 Removing and installing interior door handle with central locking system switch . . . 184
1.12 Removing and installing door warning light and footwell light . . . 185
1.13 Removing and installing interior monitor switch module . . . 185
1.14 Removing and installing hinged pocket with mount . . . 185
1.15 Removing and installing hinged pocket . . . 187
1.16 Removing and installing filler neck compartment lid/rear lid release switch . . . 187
2 Rear door trim panels . . . 188
2.1 Exploded view of fitting locations . . . 188
2.2 Exploded view of door trim cable routing . . . 189
2.3 Removing and installing rear door trim . . . 189
2.4 Removing and installing trim panel . . . 192
2.5 Removing and installing insulation . . . 192
2.6 Removing and installing armrest . . . 193
2.7 Removing and installing window regulator switch module . . . 193
2.8 Removing and installing door warning light and footwell light . . . 194
2.9 Removing and installing treble loudspeaker trim . . . 194
2.10 Removing and installing treble loudspeaker . . . 195
2.11 Removing and installing triangular trim . . . 195
2.12 Removing and installing interior door handle with central locking system switch . . . 195
2.13 Removing and installing hinged pocket with mount . . . 196
2.14 Removing and installing hinged pocket without mount . . . 197
2.15 Removing and installing glasses compartment - vehicles with long wheelbase only . . . 198
2.16 Removing and installing mechanical sun blind . . . 198
2.17 Removing and installing hook for sun blind . . . 199
2.18 Removing and installing electric sun blind . . . 200
3 Dash panel . . . 210

Protected by copyright. Copying for private or commercial purposes, in part or in whole, is not permitted unless authorised by AUDI AG. AUDI AG does not guarantee or accept any liability with respect to the correctness of information in this document. Copyright by AUDI AG.

3.1 Exploded view of fitting locations . . . 210
3.2 Removing and installing left trim panel . . . 211
3.3 Removing and installing trim panel with switch module on right . . . 212
3.4 Removing and installing dash panel vent . . . 213
3.5 Removing and installing dash panel insert trim panel . . . 214
3.6 Removing and installing trim panel for display unit for front information display and operating unit control unit J685 . . . 216
3.7 Removing and installing trim panel above glove compartment . . . 217
3.8 Removing and installing left or right defroster vent . . . 219
3.9 Removing and installing sunlight penetration photosensor G107 with cap . . . 220
3.10 Removing and installing centre defroster vent . . . 220
3.11 Removing and installing indirect ventilation trim panel . . . 221
3.12 Removing and installing left dash panel end trim . . . 223
3.13 Removing and installing right dash panel end trim . . . 223
3.14 Removing and installing dash panel . . . 224

4 Central tube . . . 241
4.1 Exploded view of fitting locations . . . 241
4.2 Separating dash panel from central tube . . . 241

5 Roof trim . . . 245
5.1 Removing moulded headliner . . . 245
5.2 Removing and installing sun visor . . . 247
5.3 Removing and installing sun visor mount . . . 247
5.4 Removing and installing roof reinforcement . . . 248

6 Trim panels . . . 249
6.1 Removing and installing upper A-pillar trim . . . 250
6.2 Removing and installing roof grab handle . . . 251
6.3 Removing and installing lower A-pillar trim . . . 253
6.4 Removing and installing upper and lower A-pillar intermediate piece . . . 253
6.5 Removing and installing foot rest . . . 253
6.6 Removing and installing upper B-pillar trim . . . 254
6.7 Removing and installing lower B-pillar trim . . . 256
6.8 Removing and installing C-pillar trim . . . 256
6.9 Removing and installing rear wheel housing trim . . . 258
6.10 Removing and installing D-pillar trim . . . 258
6.11 Removing and installing coat hook . . . 260
6.12 Removing and installing narrow D-pillar trim . . . 260
6.13 Removing and installing roof end trim . . . 262
6.14 Removing and installing rear shelf . . . 262
6.15 Removing and installing electric rear window sun blind . . . 264
6.16 Removing and installing rear shelf replacement parts . . . 266
6.17 Removing and installing floor covering . . . 267
6.18 Removing and installing box for tool kit and hazard warning triangle . . . 268
6.19 Removing and installing rear lid trim . . . 269
6.20 Removing and installing emergency release handle . . . 270
6.21 Removing and installing grip moulding . . . 271
6.22 Removing and installing button to close rear lid in luggage compartment E406 . . . 271
6.23 Removing and installing rear cross panel trim . . . 272
6.24 Removing and installing luggage compartment side trim . . . 273
6.25 Removing and installing luggage compartment socket . . . 274
6.26 Removing and installing ventilation grille . . . 274
6.27 Separating luggage compartment side trim and drip rail trim/assembling . . . 275
6.28 Removing and installing back panel trim . . . 275
6.29 Removing and installing luggage compartment floor covering . . . 277
6.30 Removing and installing rear shelf lower trim . . . 278
6.31 Removing and installing fastening rings . . . 278

Protected by copyright. Copying for private or commercial purposes, in part or in whole, is not permitted unless authorised by AUDI AG. AUDI AG does not guarantee or accept any liability with respect to the correctness of information in this document. Copyright by AUDI AG.

72 - Seat frames . . . 280

1 Front seats (memory seat, electrically operated seat) . . . 280
1.1 Removing and installing seat . . . 282
1.2 Connecting airbag adapter VAS 6229 . . . 284
1.3 Unplugging connector for side airbag . . . 285
1.4 Pin assignment of emergency power supply connector . . . 285
1.5 Removing and installing front runner cover . . . 286
1.6 Removing and installing rear runner cover . . . 287
1.7 Bump stop for front passenger's seat (USA) . . . 288
1.8 Removing and installing front seat backrest . . . 288
1.9 Replacing seat pan . . . 291
1.10 Removing and installing side trim on sill panel side . . . 292
1.11 Removing and installing side trim on tunnel side . . . 293
1.12 Removing and installing front trim . . . 293
1.13 Removing and installing seat side trim holder . . . 294
1.14 Removing and installing seat adjustment switch . . . 295
1.15 Removing and installing switch for 4-way lumbar support . . . 295
1.16 Removing and installing seat and steering column adjustment control unit with memory J136 / front passenger seat adjustment with memory control unit J521 . . . 295
1.17 Removing and installing connector point . . . 296
1.18 Removing and installing seat longitudinal adjustment motor . . . 296
1.19 Replacing seat upper frame . . . 299
1.20 Replacing seat pan . . . 301
1.21 Removing and installing safety latch . . . 301
1.22 Removing and installing seat height adjustment motor . . . 302
1.23 Removing and installing seat angle adjustment motor . . . 304
1.24 Removing and installing seat cushion extension motor . . . 305
1.25 Removing and installing backrest adjustment motor . . . 306
1.26 Removing and installing upper backrest cover panel . . . 309
1.27 Removing and installing lower backrest cover panel . . . 310
1.28 Removing and installing 4-way lumbar support . . . 311
1.29 Removing and installing lumbar support adjustment motors . . . 312
1.30 Removing and installing head restraint adjustment motor . . . 313
1.31 Removing and installing upper backrest adjustment motor . . . 314
1.32 Removing and installing electrically operated head restraint . . . 315
1.33 Removing and installing motor for head restraint adjustment with active head restraint unit . . . 316
1.34 Removing and installing seat ventilation unit (seat pan) . . . 317
1.35 Removing and installing seat ventilation unit (backrest) . . . 317
1.36 Removing rear footwell light . . . 318
1.37 Electrically operated front seat wiring . . . 318

2 Rear seats . . . 332
2.1 Removing and installing rear seat bench . . . 333
2.2 Removing and installing rear seat backrest . . . 334
2.3 Removing and installing centre armrest . . . 335
2.4 Dismantling centre armrest . . . 336
2.5 Removing and installing cup holder . . . 336
2.6 Removing and installing centre mount . . . 336
2.7 Removing and installing head restraints . . . 337
2.8 Removing and installing centre head restraint . . . 338
2.9 Removing and installing centre head restraint blind . . . 338
2.10 Dismantling centre head restraint . . . 339
2.11 Removing and installing slide-in locking mechanism for centre head restraint . . . 339
2.12 Removing and installing backrest mat . . . 340

3 Electrically operated individual rear seats . . . 341

Protected by copyright. Copying for private or commercial purposes, in part or in whole, is not permitted unless authorised by AUDI AG. AUDI AG does not guarantee or accept any liability with respect to the correctness of information in this document. Copyright by AUDI AG.

3.1 Exploded view of electrically operated individual rear seat components . . . 341
3.2 Removing and installing centre section . . . 341
3.3 Removing and installing seat pan . . . 342
3.4 Removing and installing individual rear seat . . . 343
3.5 Removing and installing backrest holder . . . 344
3.6 Seat centre section holders . . . 344
3.7 Removing and installing backrest centre section . . . 345
3.8 Removing and installing release handle for backrest centre section . . . 345
3.9 Removing and installing rear shelf trim and filler piece . . . 346
3.10 Removing and installing mounting plate for control units . . . 347
3.11 Separating rear seat adjustment with memory control unit J522 from mounting plate . . . 347
3.12 Separating driver side J674 and front passenger side J675 rear seat ventilation control unit from mounting plate . . . 348
3.13 Removing and installing side trim on sill panel side . . . 349
3.14 Removing and installing lumbar support adjustment switch . . . 350
3.15 Removing and installing seat adjustment switch . . . 350
3.16 Removing and installing side trim on tunnel side . . . 350
3.17 Removing and installing front trim . . . 351
3.18 Removing and installing seat ventilation unit (seat pan) . . . 351
3.19 Removing and installing seat ventilation unit (backrest) . . . 351
3.20 Removing and installing rear left seat V227 and rear right seat V228 rake adjustment motor . . . 353
3.21 Removing and installing rear left seat V87 and rear right seat V88 longitudinal adjustment motor . . . 354
3.22 Removing and installing upper backrest adjustment motor V232 . . . 355
3.23 Removing and installing rear left seat V127 and rear right V128 lumbar support longitudinal adjustment motor with four-way lumbar support . . . 356
3.24 Removing and installing rear left seat lumbar support height adjustment motor V225 and V225 . . . 357
3.25 Removing and installing outer seat belt retainer . . . 358
3.26 Removing and installing head restraint . . . 358

74 - Seat - padding, covers . . . 359

1 Front seat covers and padding (memory seat, electrically operated seat) . . . 359
1.1 Removing and installing seat pan cover and padding (sports seat) . . . 360
1.2 Removing and installing seat cushion extension trim . . . 362
1.3 Removing and installing seat side padding and cover . . . 363
1.4 Removing and installing backrest cover and padding (sports seat, standard seat) . . . 364
1.5 Removing head restraint guides . . . 366
1.6 Removing head restraint guides (convenience seat) . . . 366
1.7 Removing and installing seat heating element (sports seat) . . . 367
1.8 Removing and installing seat side padding heating elements (bonded) . . . 367
1.9 Removing and installing backrest heating element . . . 368
1.10 Removing and installing backrest heating elements (bonded) . . . 368
1.11 Removing and installing head restraint cover and padding . . . 369

2 Rear seat covers and padding . . . 370
2.1 Removing and installing cover and padding for rear seat bench . . . 371
2.2 Removing and installing cover and padding for rear seat backrest . . . 373
2.3 Removing head restraint guides with backrest in position . . . 375
2.4 Removing head restraint guides with backrest removed . . . 375
2.5 Removing and installing head restraint cover and padding . . . 376

3 Covers and padding for electrically operated individual rear seats . . . 377
3.1 Removing and installing cover and padding for seat pan . . . 377
3.2 Removing and installing cover and padding for individual rear seat . . . 379
3.3 Removing and installing centre section cover . . . 382
3.4 Removing head restraint guides . . . 382
3.5 Removing and installing head restraint cover and padding . . . 382

Reproduction, copyright, distribution to third parties and other commercial purposes, in whole or in part, in any form, is not permitted unless authorised by AUDI AG. AUDI AG does not guarantee or accept any liability with respect to the correctness of information in this document. Copyright by AUDI AG.

3.6 Removing and installing seat heating element 383
3.7 Removing and installing backrest heating element 383

76 - Gas, water, electricity 384

1 Servicing refrigerator box 384
1.1 Exploded view of components 384
1.2 Removing and installing refrigerator box 385
1.3 Removing and installing thermostat 386
1.4 Removing and installing contact switch for refrigerator box interior light 387
1.5 Removing and installing LED for operation indicator 388
1.6 Removing and installing LED for refrigerator box interior light 390
1.7 Removing and installing battery monitor 390
1.8 Removing and installing control unit for refrigerator box compressor 391

Protected by copyright. Copying for private or commercial purposes, in part or in whole, is not permitted unless authorised by AUDI AG. AUDI AG does not guarantee or accept any liability with respect to the correctness of information in this document. Copyright by AUDI AG.

00 – Technical data

1 Routing and attaching pipes/hoses and wiring

Make sketches or take photographs when unfastening or removing and installing hydraulic and pneumatic pipes or electrical wires. This ensures re-installation at the original location.

Protected by copyright. Copying for private or commercial purposes, in part or in whole, is not permitted unless authorised by AUDI AG. AUDI AG does not guarantee or accept any liability with respect to the correctness of information in this document. Copyright by AUDI AG.

2 Contact corrosion

Contact corrosion can occur if unsuitable fasteners (bolts, nuts, washers etc.) are used on the vehicle.

For this reason, only fasteners with a special surface coating are fitted.

In addition, all rubber and plastic parts and all adhesives are made of non-conductive materials.

Always install new parts as listed in the Parts catalogue if you are not sure whether used parts can be reused.

Important:

- We recommend using genuine replacement parts only, as these have been checked and are compatible with aluminium.
- We recommend using Audi Genuine Accessories.
- Damage caused by contact corrosion is not covered by the warranty.

Protected by copyright. Copying for private or commercial purposes, in part or in whole, is not permitted unless authorised by AUDI AG. AUDI AG does not guarantee or accept any liability with respect to the correctness of information in this document. Copyright by AUDI AG.

68 – Interior equipment

1 Shelves / trim panels

Overview

- ⇒ „1.1 Exploded view of glove box/knee bolster“, page 4
- ⇒ „1.2 Removing and installing glove box/knee bolster“, page 5
- ⇒ „1.3 Removing and installing glove box lid“, page 7
- ⇒ „1.4 Removing and installing cushioning mechanism for glove box lid/knee bolster“, page 9
- ⇒ „1.5 Exploded view of storage compartment/knee bolster (driver's side)“, page 9
- ⇒ „1.6 Removing and installing storage compartment/knee bolster (driver's side)“, page 10
- ⇒ „1.7 Removing storage box from storage compartment and installing“, page 11
- ⇒ „1.8 Removing and installing steering column trim“, page 12
- ⇒ „1.9 Removing and installing coin holder“, page 13

Protected by copyright. Copying for private or commercial purposes, in part or in whole, is not permitted unless authorised by AUDI AG. AUDI AG does not guarantee or accept any liability with respect to the correctness of information in this document. Copyright by AUDI AG.

1.1 Exploded view of glove box/knee bolster

1 - Glove box/knee bolster
- ❑ Removing and installing ⇒ page 5

2 - Wiring harness for glove box
- ❑ Attaching ⇒ page 4

3 - Bolts (2x), 4 Nm

4 - Support (left-side)

5 - Dash panel

6 - Central tube

7 - Support (right-side)

8 - Speed nut (2x)

9 - Dash panel end trim (right-side)

10 - Bolts (2x), 4 Nm

11 - Clips (4x)

12 - Bolts (2x), 4 Nm

13 - Bolts (3x), 4 Nm

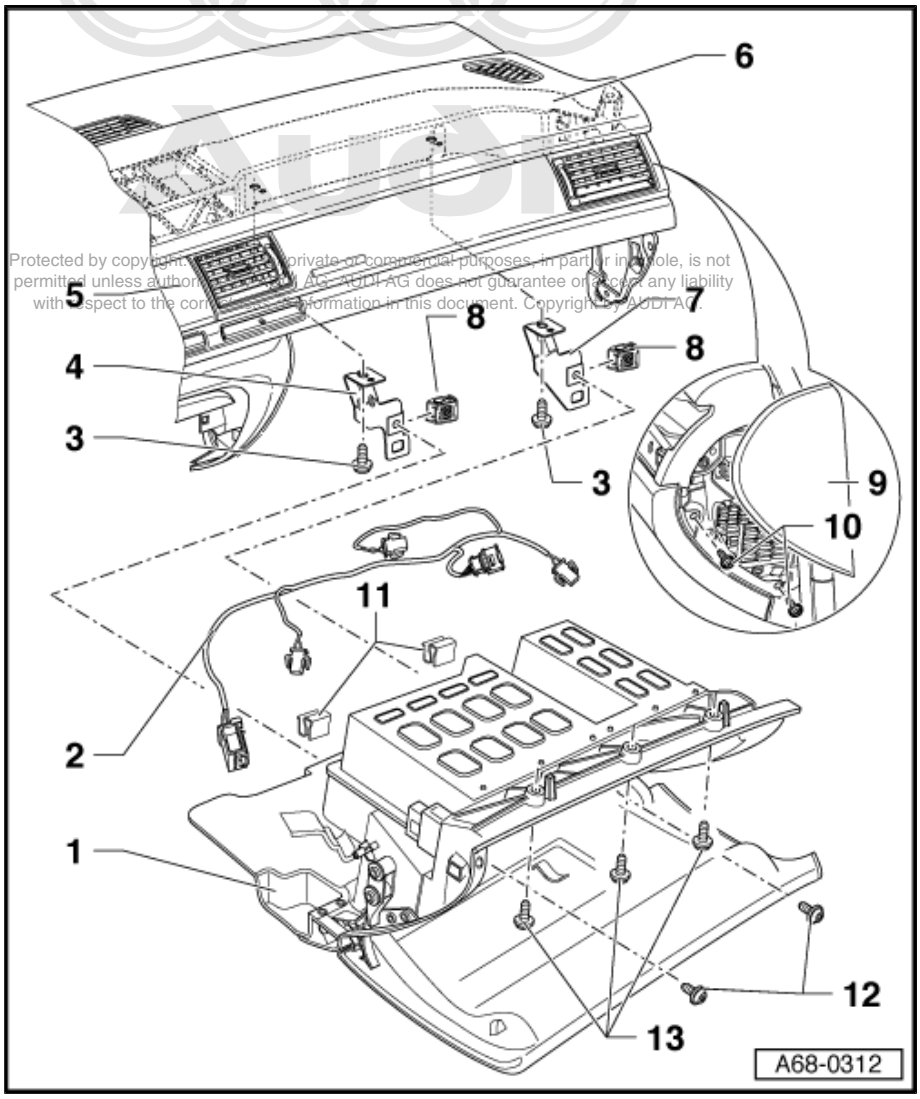

Protected by copyright. Use for private or commercial purposes, in part or in whole, is not permitted unless authorised by AUDI AG. AUDI AG does not guarantee or accept any liability with respect to the correctness of information in this document. Copyright by AUDI AG

Securing wiring harness for glove box

Wiring harness -1- for glove box is secured with clips -arrows-.

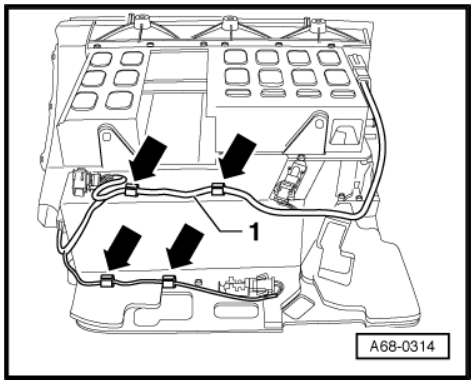

1.2 Removing and installing glove box/knee bolster

Special tools and workshop equipment required

- Removal wedge -3409-
- Protective cap - VAS 6223/9-
- Radio release tool - T10057-

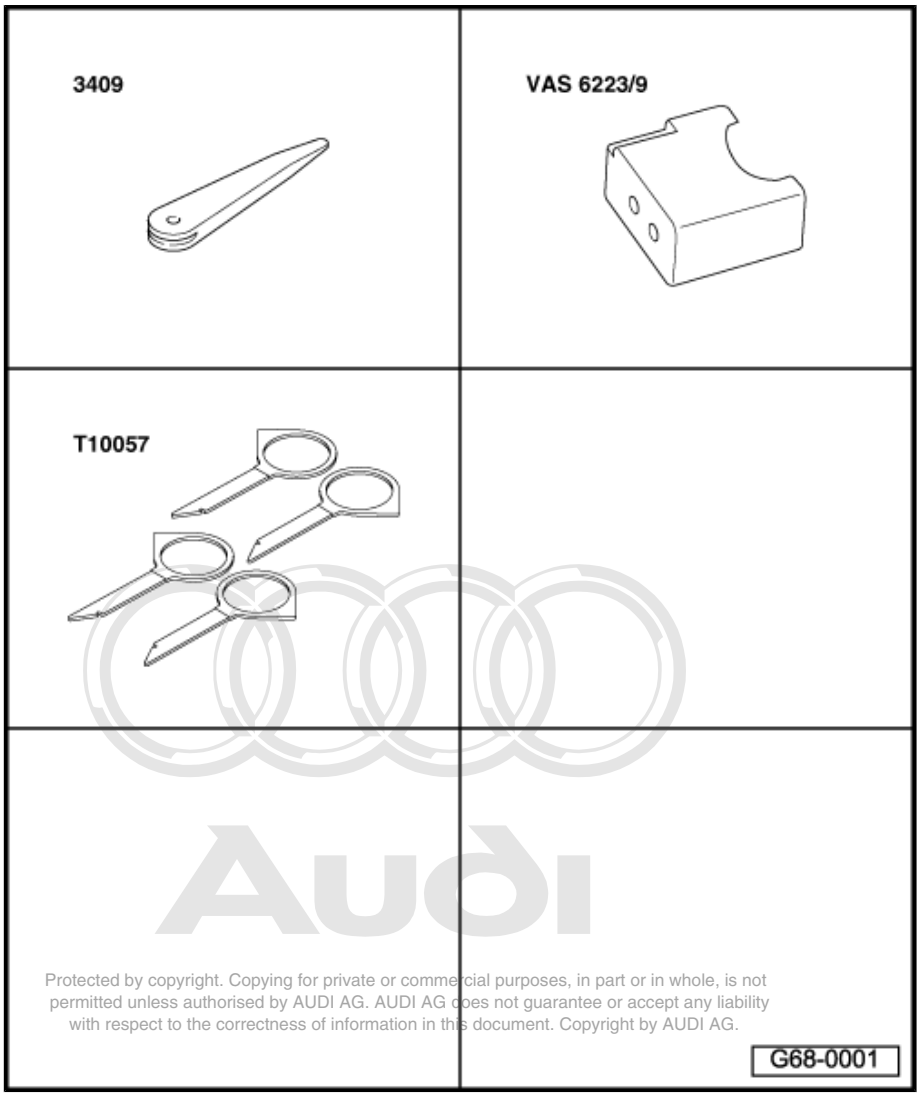

Protected by copyright. Copying for private or commercial purposes, in part or in whole, is not permitted unless authorised by AUDI AG. AUDI AG does not guarantee or accept any liability with respect to the correctness of information in this document. Copyright by AUDI AG.

Removing

> ⚠ **WARNING**
>
> *Observe safety regulations for pyrotechnic components* *⇒ page 94* .

– Vehicles with knee airbag: With ignition switched on, disconnect battery earth wire ⇒ Electrical system; Rep. gr. 27 .

– Use screwdriver to prise off dash panel end trim (right-side) -arrow-.

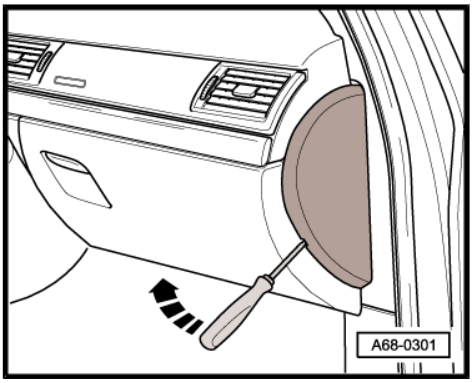

– If fitted, remove CD changer as follows:

– Insert two keys of radio release tool -T10057- into front of CD changer.

♦ Top L - top left

♦ Top R - top right

– Pull CD changer out of mounting frame.

– Unplug electrical connector.

– Unplug connector for optical fibre.

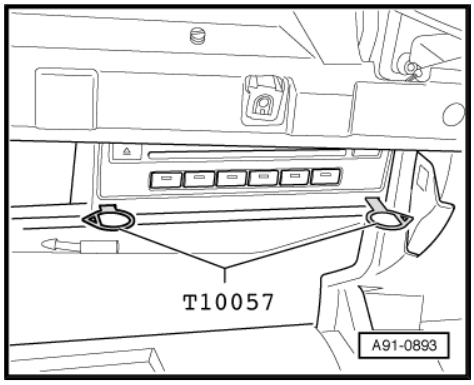

– Cover open wiring harness connector -2- of optical fibre cable with protective cap -VAS 6223/9- -Item 1-.

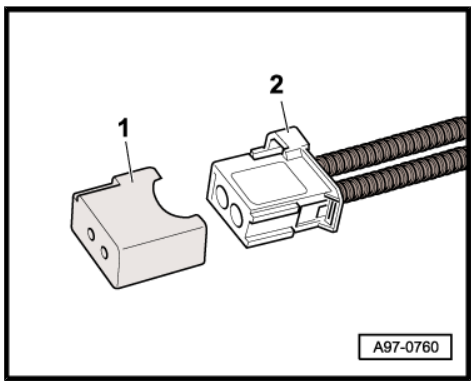

Note

The protective cap is designed to prevent the end face of the optical fibre from becoming soiled or damaged, as this would impair light transmission.

– Press catches on CD changer and pull release keys out of CD changer.

– If fitted, remove storage compartment from glove box. To do so, use small screwdriver to release retaining tabs -1- and -2- in -direction of arrow-.

– Pull storage compartment out of glove box.

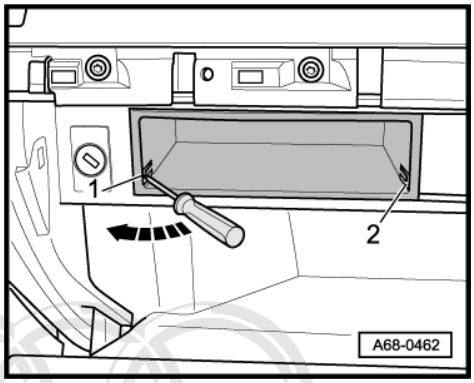

– Remove bolts -arrows-.

– Remove bolts -1- and -2-.

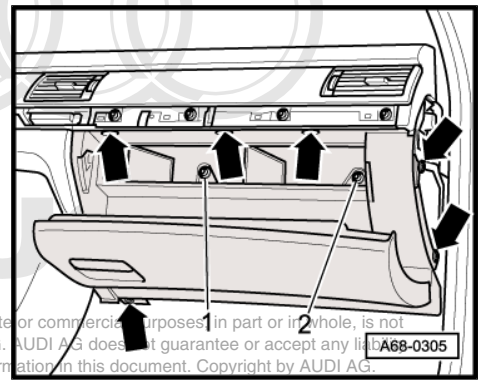

Protected by copyright. Copying for private or commercial purposes, in part or in whole, is not permitted unless authorised by AUDI AG. AUDI AG does not guarantee or accept any liability with respect to the correctness of information in this document. Copyright by AUDI AG.

– Unplug electrical connector -1- for glove box wiring harness -2- from supply lead -3-.

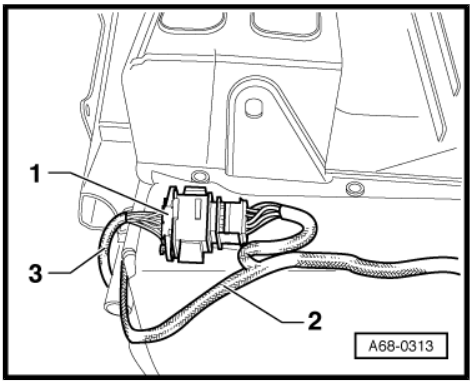

– On vehicles with knee airbag: Pull catch -2- in direction of arrow and unplug electrical connectors -1- and -3-.

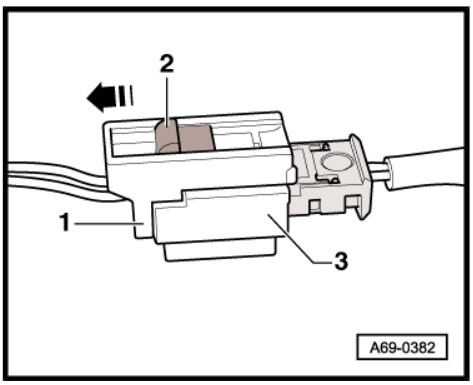

– Remove glove box.

Installing

Installation is carried out in reverse order; note the following:

– With ignition switched on, connect battery earth wire ⇒ Electrical system; Rep. gr. 27 .

Tightening torque:

Glove box to dash panel: 4 Nm

Reproduction by copying or copying for private or commercial purposes, in part or in whole, is not permitted unless authorised by AUDI AG. AUDI AG does not guarantee or accept any liability with respect to the correctness of information in this document. Copyright by AUDI AG.

1.3 Removing and installing glove box lid

Special tools and workshop equipment required

♦ Torque wrench -V.A.G 1783/-

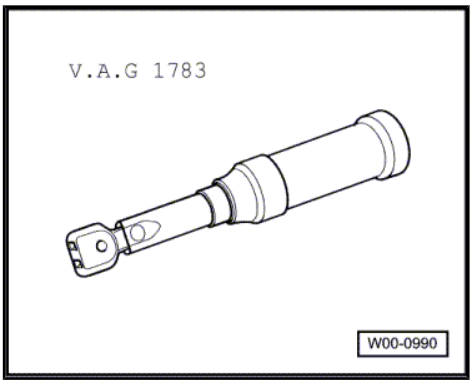

Removing

– Remove glove box ⇒ page 3 .

– Pull pivot pin -1- out of cushioning mechanism for glove box lid.

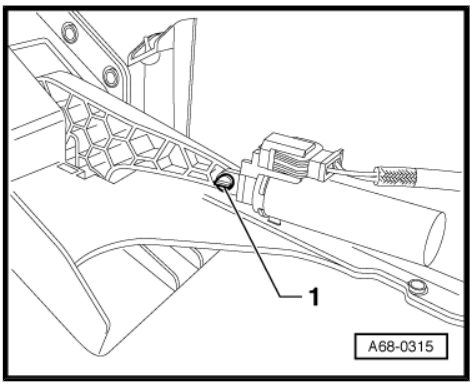

– Unscrew bolts -1-.
– Detach stop -2-.
– Open glove box.

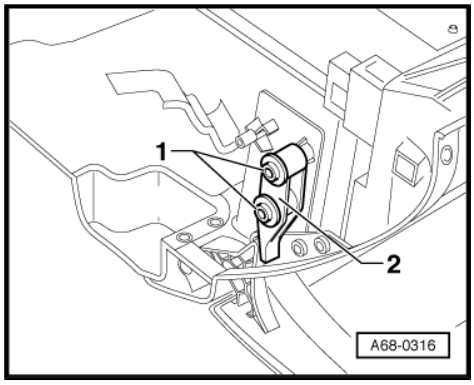

– Remove pin -1- on left side of glove box.

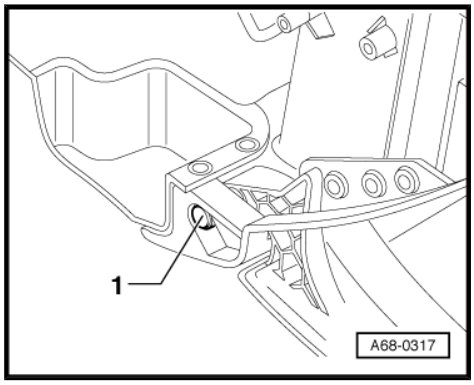

– Remove pin -1- on right side of glove box.
– Detach glove box lid.

Installing

Install in reverse order of removal.

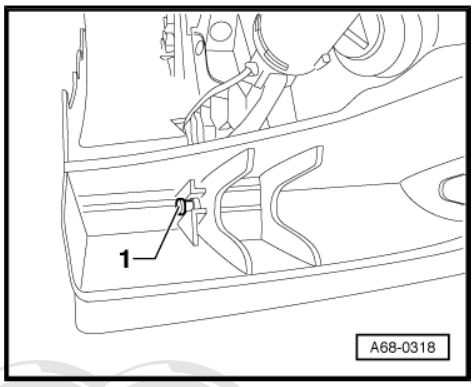

Tightening torque:

1 - Bolts (2x), 2 Nm

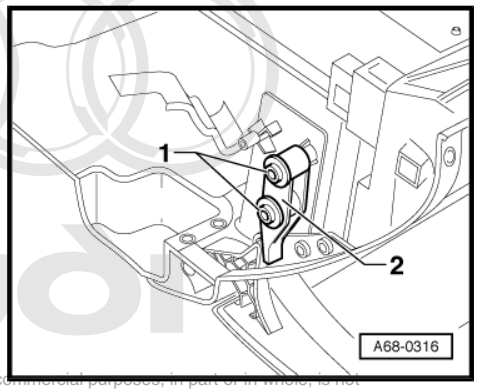

Protected by copyright. Copying for private or commercial purposes, in part or in whole, is not permitted unless authorised by AUDI AG. AUDI AG does not guarantee or accept any liability with respect to the correctness of information in this document. Copyright by AUDI AG.

1.4 Removing and installing cushioning mechanism for glove box lid/knee bolster

Removing

– Remove glove box ⇒ page 3 .
– Open glove box.
– Unplug electrical connector -2-.
– Pull out pivot pin -1-.
– Release cushioning mechanism for glove box lid -3- in clockwise direction and detach cushioning mechanism.

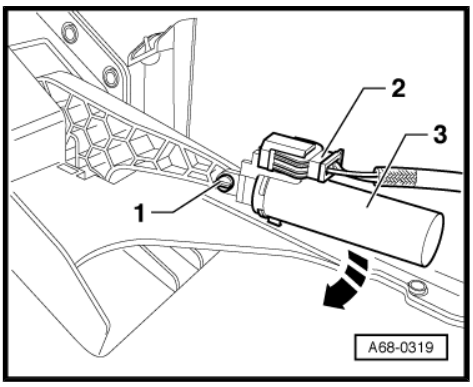

Installing

Install in reverse order of removal.

1.5 Exploded view of storage compartment/knee bolster (driver's side)

Protected by copyright. Copying for private or commercial purposes, in part or in whole, is not permitted unless authorised by AUDI AG. AUDI AG does not guarantee or accept any liability with respect to the correctness of information in this document. Copyright by AUDI AG.

1 - Storage compartment/knee bolster (driver's side)

- ❑ Removing and installing ⇒ page 10

2 - Storage box

- ❑ Removing and installing ⇒ page 11

3 - Bolts (2x), 4 Nm

4 - Pivot pin (2x)

- ❑ For securing storage box

5 - Bolts (2x), 4 Nm

6 - Support (left-side)

7 - Speed nut (2x)

8 - Support (right-side)

9 - Dash panel end trim (left-side)

10 - Dash panel

11 - Entry and start authorisation switch -E415-

- ❑ Removing and installing ⇒ Electrical system; Rep. gr. 96

12 - Bolts (2x), 4 Nm

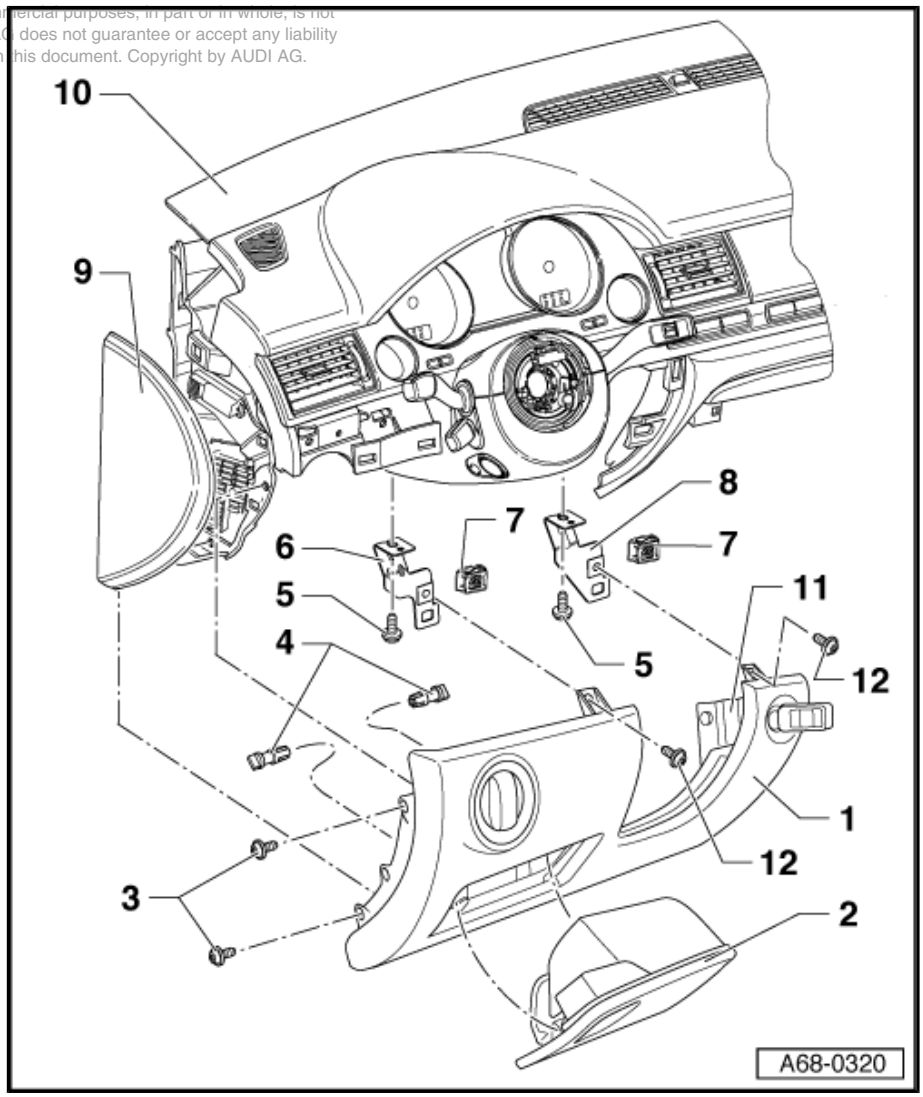

1.6 Removing and installing storage compartment/knee bolster (driver's side)

Special tools and workshop equipment required

- Removal wedge -3409-

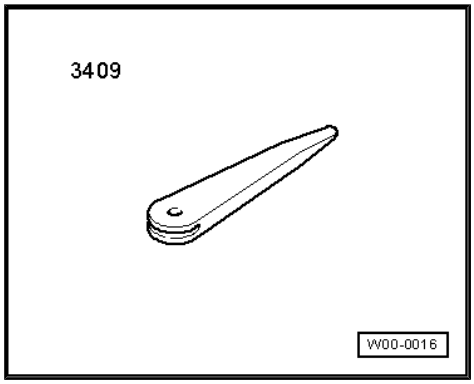

Removing

> **WARNING**
>
> *Observe safety regulations for pyrotechnic components* *⇒ page 94* *.*

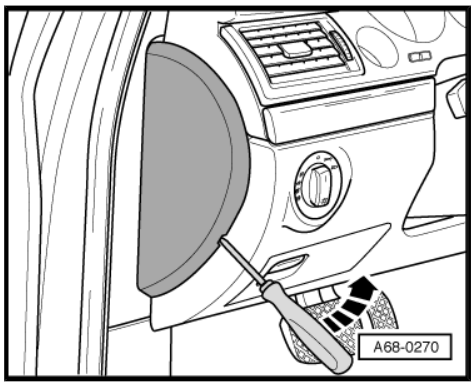

– Vehicles with knee airbag: With ignition switched on, disconnect battery earth wire ⇒ Electrical system; Rep. gr. 27 .

– Use screwdriver to prise off dash panel end trim (left-side) -arrow-.

– Carefully separate trim panel -1- from dash panel using removal wedge -3409- -arrows-.

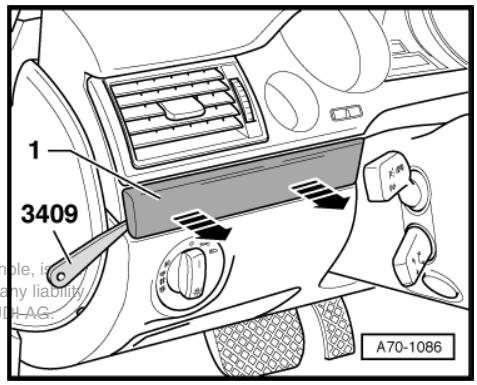

Protected by copyright. Copying for private or commercial purposes, in part or in whole, is not permitted unless authorised by AUDI AG. AUDI AG does not guarantee or accept any liability with respect to the correctness of information in this document. Copyright by AUDI AG.

– Open coin holder.

– Slide trim for coin holder to left out of fastener -arrow- and detach.

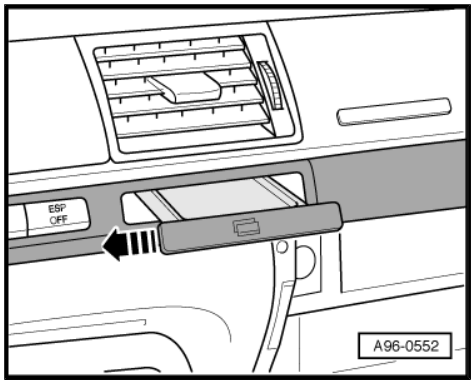

– Open glove box.

– Starting from above glove box, carefully separate trim panel -1- with switch module from dash panel using removal wedge -3409- .

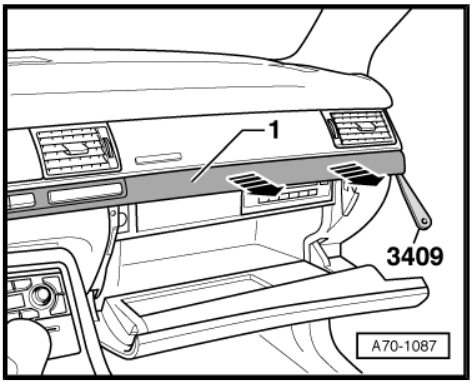

Note

Take particular care when unfastening clip at end of trim panel closest to driver.

– Unplug electrical connector.

– Unscrew driver's storage compartment -arrows-.

– Unplug electrical connectors.

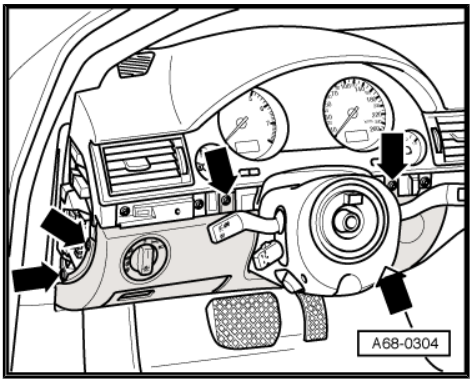

Protected by copyright. Copying for private or commercial purposes, in part or in whole, is not permitted unless authorised by AUDI AG. AUDI AG does not guarantee or accept any liability with respect to the correctness of information in this document. Copyright by AUDI AG.

– On vehicles with knee airbag: Pull catch -2- in direction of arrow and unplug electrical connectors -1- and -3-.

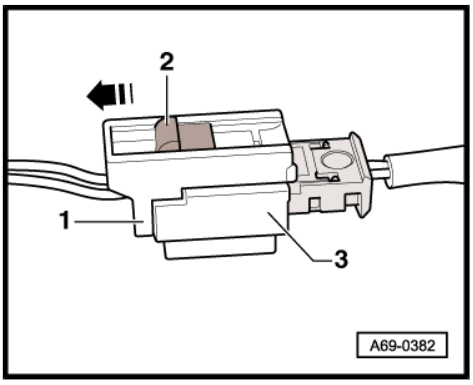

Installing

Installation is carried out in reverse order; note the following:

– When fitting trim panel -1- with switch panel make sure both catches are inserted in centre of trim panel between dash panel and monitor housing -arrows-.

– With ignition switched on, connect battery earth wire ⇒ Electrical system; Rep. gr. 27 .

Tightening torque:

Storage compartment (driver's side) to dash panel: 4 Nm

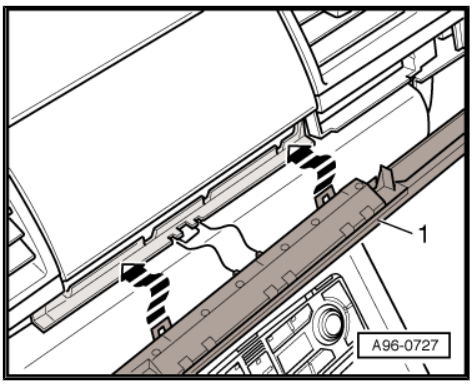

1.7 Removing storage box from storage compartment and installing

Removing

– Remove storage compartment (driver's side) ⇒ page 10 .
– Destroy expanding section -arrows- of pivot pin -2-.
– Pull pivot pin -2- out of mounting.
– Take storage box -3- out of storage compartment (driver's side) -1-.

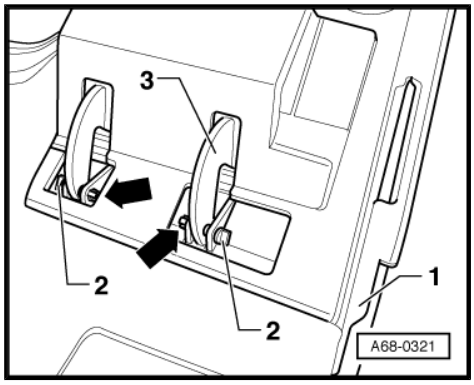

Installing

Installation is carried out in reverse order; note the following:

– Renew pivot pins.
– Make sure pivot pins engage fully.

1.8 Removing and installing steering column trim

Special tools and workshop equipment required

♦ Torque wrench -V.A.G 1783-

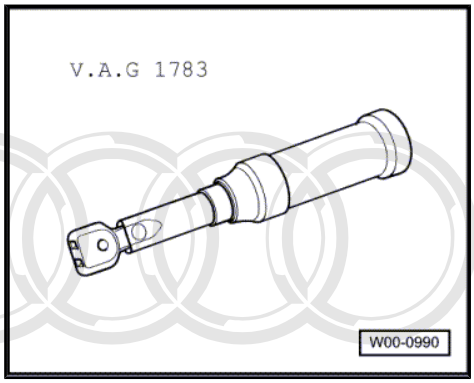

♦ Special screwdriver T8 -T40056 A-

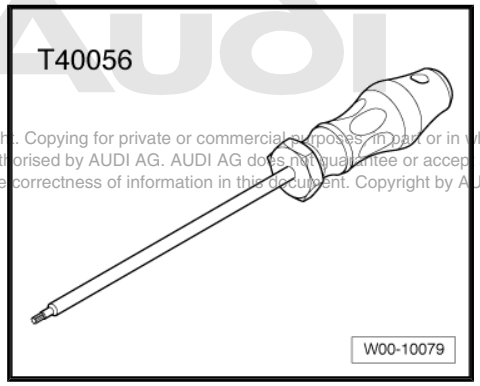

Protected by copyright. Copying for private or commercial purposes, in part or in whole, is not permitted unless authorised by AUDI AG. AUDI AG does not guarantee or accept any liability with respect to the correctness of information in this document. Copyright by AUDI AG.

Removing

– Lower steering wheel as far as possible towards rear, making use of the full range of the steering column adjuster.
– Remove airbag unit and steering wheel ⇒ page 123 .
– Remove storage compartment (driver side) ⇒ page 9 .

Vehicles with mechanically adjustable steering column

– Slacken off bolt -2-.
– Detach handle -1-.

3 - Steering column trim

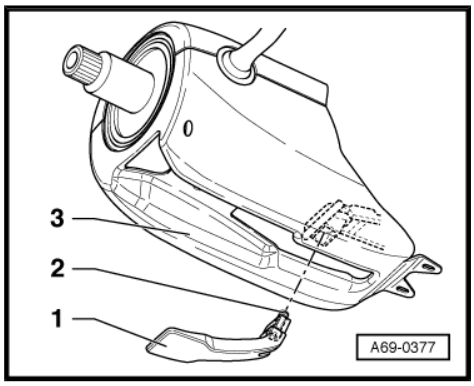

All vehicles (continued)

– Unscrew bolts -5- (2x).
– Remove bolt -4-.
– Unscrew Torx bolts -3- (2x) using special screwdriver T8 - T40056 A- .
– Separate trim (top) -2- for steering column switch module from trim (bottom) -1- and detach both parts.

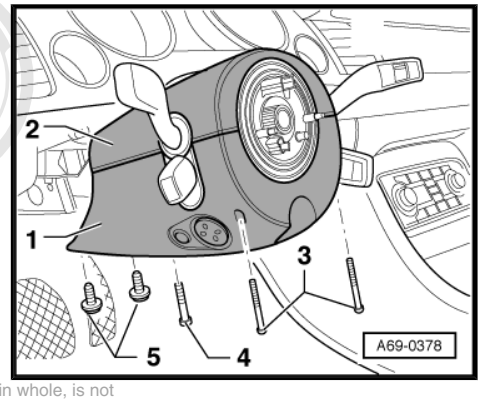

Installing

Installation is carried out in reverse order; note the following:

– Engage upper trim in hooks of lower trim, press both parts together and screw them on.

Reproduction of this document or parts thereof in any form or by any means, in part or in whole, is not permitted unless authorised by AUDI AG. AUDI AG does not guarantee or accept any liability with respect to the correctness of information in this document. Copyright by AUDI AG.

1.8.1 Tightening torques

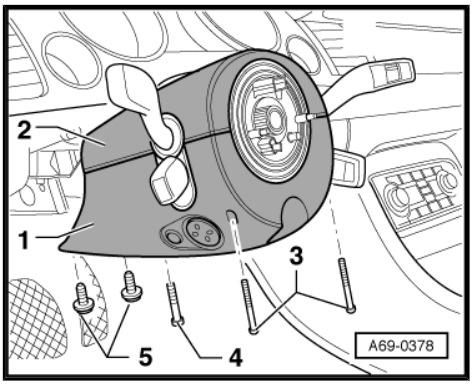

3 - Torx bolt T8, 0.5 Nm

4 - Bolt, 4 Nm

5 - Bolt, 4 Nm

Bolt for handle (mechanically adjustable steering column): 3 Nm

1.9 Removing and installing coin holder

Special tools and workshop equipment required

♦ Removal wedge -3409-

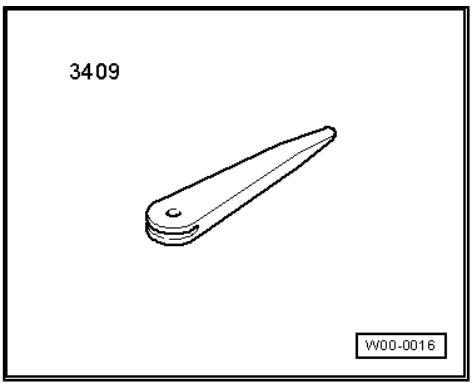

♦ Hook -3438-

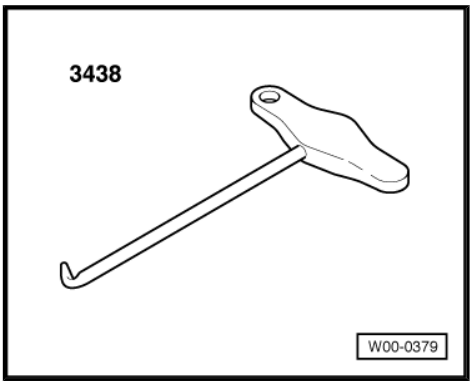

Removing

– Open coin holder.
– Slide trim for coin holder to left out of fastener -arrow- and detach.

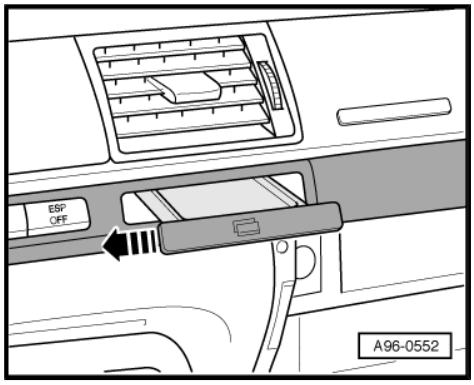

– Open glove box.
– Starting from above glove box, carefully separate trim panel -1- with switch module from dash panel using removal wedge -3409- .
– Detach trim panel with switch panel in direction of -arrow-.

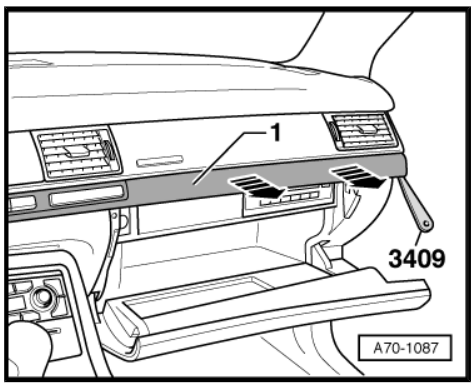

Note

Take particular care when unfastening clip at end of trim panel closest to driver.

– Unplug electrical connector.

– Turn knurled wheel -3- of left air vent above glove box fully up.
– Above bottom slat -2-, insert jeweller's screwdriver -1- in each of the two air vent clips.
– Alternating between left and right side, pull air vent out of opening, taking care to ensure that jeweller's screwdrivers remain in position.

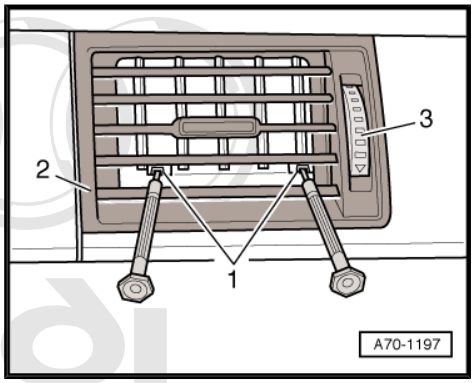

Note

If necessary, use hook -3438- to pull air vent out of opening.

– Unplug connector at air vent.

Protected by copyright. Copying for private or commercial purposes, in part or in whole, is not permitted unless authorised by AUDI AG. AUDI AG does not guarantee or accept any liability with respect to the correctness of information in this document. Copyright by AUDI AG.

– Release retaining tabs -1- of coin holder.
– Pull coin holder out of dash panel -arrow-.
– Unplug connector on back of coin holder.

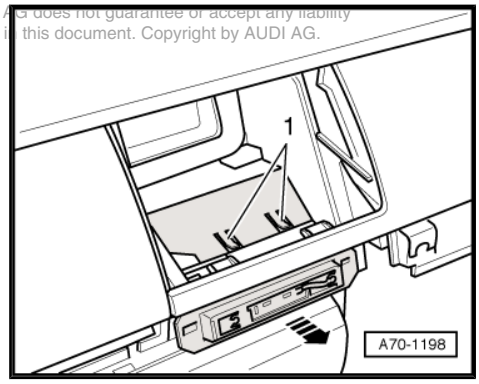

Installing

Installation is carried out in reverse order; note the following:

– When fitting trim panel -1- with switch panel make sure both catches are inserted in centre of trim panel between dash panel and monitor housing -arrows-.

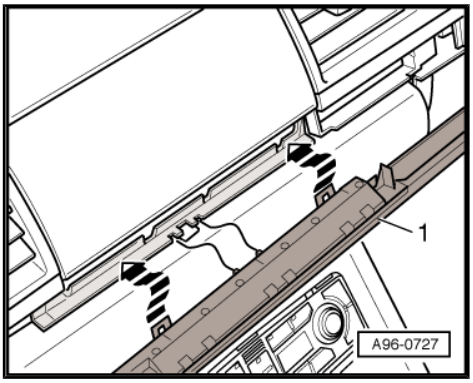

Protected by copyright. Copying for private or commercial purposes, in part or in whole, is not permitted unless authorised by AUDI AG. AUDI AG does not guarantee or accept any liability with respect to the correctness of information in this document. Copyright by AUDI AG.

2 Removing and installing centre console without extension

Overview

- ⇒ „2.1 Centre console without extension - overview of fitting locations“, page 17
- ⇒ „2.2 Exploded view of centre console without extension“, page 18
- ⇒ „2.3 Removing and installing centre console“, page 19
- ⇒ „2.4 Removing and installing floor covering rod (rear and front)“, page 29
- ⇒ „2.5 Removing and installing air conditioner operating unit (front)“, page 29
- ⇒ „2.6 Removing and installing ashtray (front)“, page 31
- ⇒ „2.7 Renewing trim for ashtray (front)“, page 32
- ⇒ „2.8 Removing and installing cigarette lighter (front)“, page 33
- ⇒ „2.9 Removing and installing trim for centre console with multimedia operating unit“, page 33
- ⇒ „2.10 Removing and installing front centre console cup holder“, page 34
- ⇒ „2.11 Removing and installing rear vent (2-zone climate control)“, page 35
- ⇒ „2.12 Removing and installing trim for rear centre console (rear vent, 2-zone climate control)“, page 37
- ⇒ „2.13 Removing and installing rear cigarette lighter (rear vent, 2-zone climate control)“, page 37
- ⇒ „2.14 Removing and installing storage compartment (rear)“, page 38
- ⇒ „2.15 Renewing trim for storage compartment (rear)“, page 38
- ⇒ „2.16 Removing and installing centre console storage compartment (one-piece centre armrest)“, page 39
- ⇒ „2.17 Removing and installing centre console storage compartment (split centre armrest)“, page 39
- ⇒ „2.18 Removing and installing rear vent (4-zone climate control)“, page 41
- ⇒ „2.19 Removing and installing rear air conditioner operating unit (4-zone climate control)“, page 43
- ⇒ „2.20 Removing and installing rear cigarette lighter (rear vent, 4-zone climate control)“, page 44
- ⇒ „2.21 Removing and installing trim for rear centre console (rear vent, 4-zone climate control)“, page 44
- ⇒ „2.22 Removing and installing rear air distributor and rear air duct (2 and 4-zone climate control)“, page 45
- ⇒ „2.23 Removing and installing rear vent warm air and cold air flap control motor (left-side/right-side)“, page 46
- ⇒ „2.24 Removing and installing rear centre console temperature sensor (left-side/right-side)“, page 47

Protected by copyright. Copying for private or commercial purposes, in part or in whole, is not permitted unless authorized by AUDI AG. AUDI AG does not guarantee or accept any liability with respect to the correctness of information in this document. Copyright by AUDI AG.

2.1 Centre console without extension - overview of fitting locations

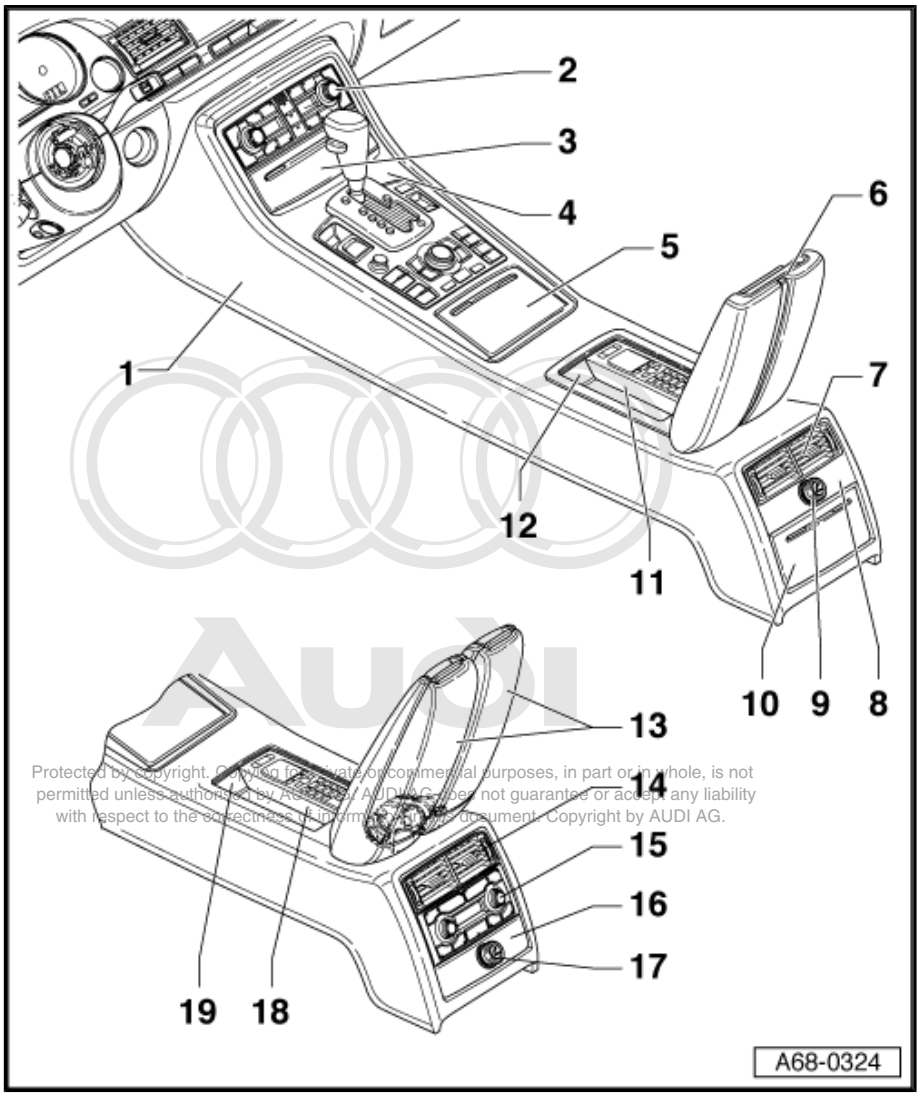

Protected by copyright. Copying for private or commercial purposes, in part or in whole, is not permitted unless authorised by AUDI AG. AUDI AG does not guarantee or accept any liability with respect to the correctness of information in this document. Copyright by AUDI AG.

1 - Centre console

- ❑ Removing and installing ⇒ page 19

2 - Air conditioner operating unit (front)

- ❑ Removing and installing ⇒ page 29

3 - Ashtray (front)

- ❑ Removing and installing ⇒ page 31

4 - Trim for centre console with multimedia operating unit

- ❑ Removing and installing ⇒ page 33

5 - Front centre console cup holder

- ❑ Removing and installing ⇒ page 34

6 - Centre armrest (one-piece)

- ❑ Removing and installing ⇒ page 75
- ❑ Dismantling and assembling ⇒ page 77

7 - Rear vent (2-zone climate control)

- ❑ Removing and installing ⇒ page 35

8 - Trim for rear centre console

- ❑ Removing and installing ⇒ page 37

9 - Cigarette lighter (rear)

- ❑ Removing and installing ⇒ page 37

10 - Storage compartment (rear)

- ❑ Removing and installing ⇒ page 38

11 - Handset cradle

- ❑ Removing and installing ⇒ Rep. gr. 91

12 - Storage compartment

- ❑ Removing and installing ⇒ page 39

13 - Centre armrest (split)

- ❑ Removing and installing ⇒ page 84

14 - Rear vent (4-zone climate control)

- ❑ Removing and installing ⇒ page 41

15 - Air conditioner operating unit (rear)

- ❑ Removing and installing ⇒ page 43

16 - Trim for rear centre console

- ❑ Removing and installing ⇒ page 44

17 - Cigarette lighter (rear)

- ❑ Removing and installing ⇒ page 44

18 - Handset cradle

- ❑ Removing and installing ⇒ Rep. gr. 91

19 - Storage compartment

- ❑ Removing and installing ⇒ page 39

2.2 Exploded view of centre console without extension

1 - Centre console without extension

- ❑ Removing and installing ⇒ page 19

2 - Bolts (4x), 4 Nm

3 - Bolts (4x), 4 Nm

4 - Bolts/nuts (2x), 4 Nm

5 - Rear floor covering rod (right-side)

- ❑ Removing and installing ⇒ page 29

6 - Rear floor covering rod (left-side)

- ❑ Removing and installing ⇒ page 29

7 - Bracket for centre console (centre)

- ❑ Removing and installing ⇒ page 47

8 - Front floor covering rod (left-side)

- ❑ Removing and installing ⇒ page 29

9 - Bolts (2x), 4 Nm

10 - Dash panel

11 - Bolts (2x), 4 Nm

12 - Front floor covering rod (right-side)

- ❑ Removing and installing ⇒ page 29

13 - Air duct (rear)

- ❑ Removing and installing ⇒ page 45

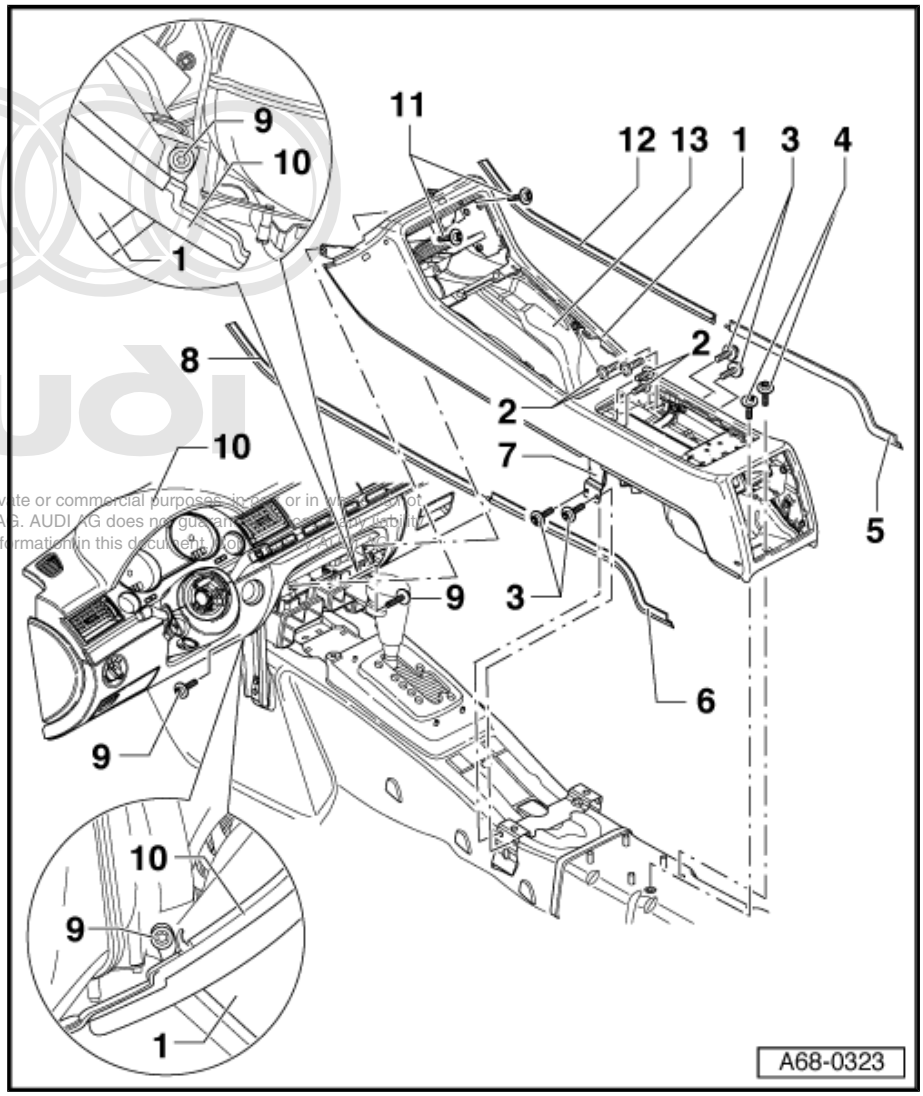

Audi
Protected by copyright. Copying for private or commercial purposes, in part or in whole, is not permitted unless authorised by AUDI AG. AUDI AG does not guarantee or assume any liability with respect to the correctness of information in this document.

2.3 Removing and installing centre console

Special tools and workshop equipment required

- Removal wedge -3409-
- Protective cap - VAS 6223/9-
- Radio release tool - T10057-

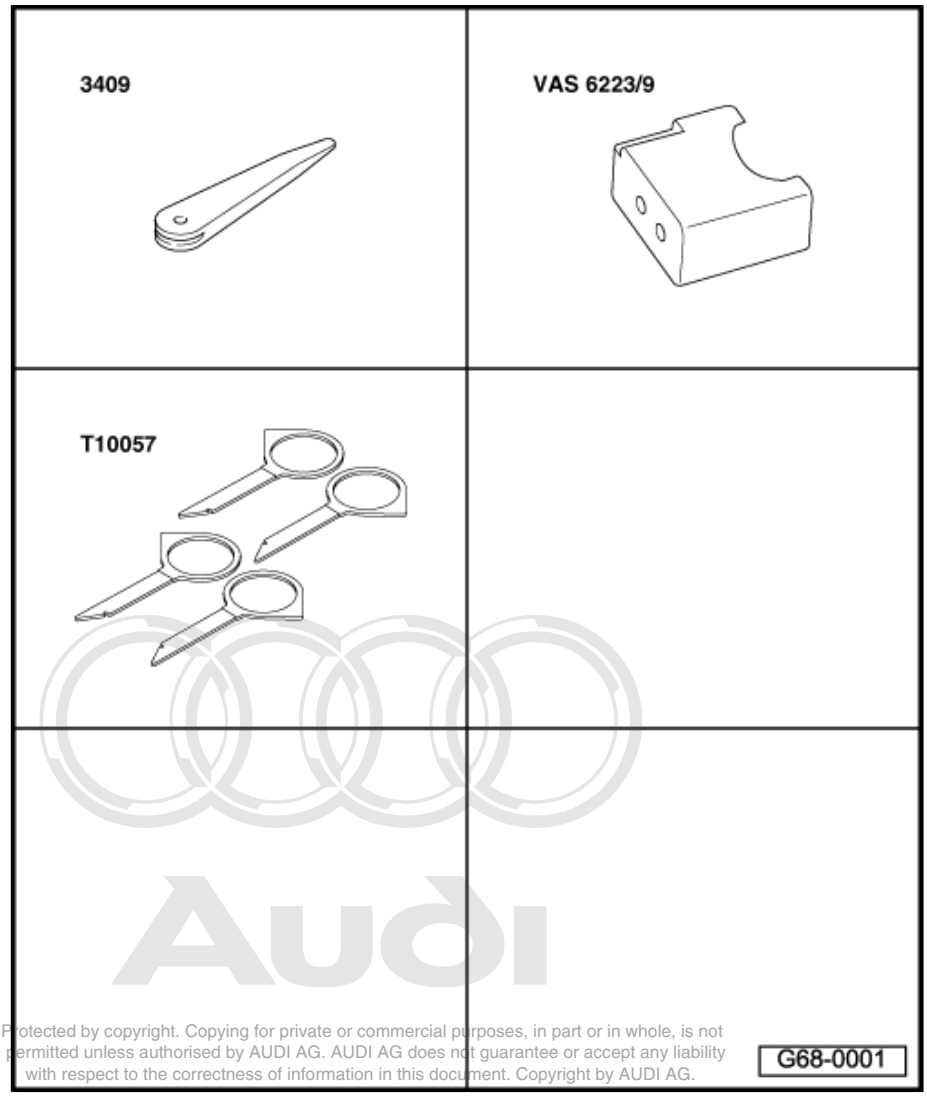

Protected by copyright. Copying for private or commercial purposes, in part or in whole, is not permitted unless authorised by AUDI AG. AUDI AG does not guarantee or accept any liability with respect to the correctness of information in this document. Copyright by AUDI AG.

Removing

Note

All cable ties unfastened or cut open on removal are to be re-attached at the same location on installation.

– Move front seats to rearmost position and set backrests to 45° position.

WARNING

Observe safety regulations for pyrotechnic components ⇒ page 94 .

– With ignition switched on, disconnect battery earth wire ⇒ Electrical system; Rep. gr. 27 .

– Remove airbag unit and steering wheel ⇒ page 123 .

– Use screwdriver to prise off dash panel end trim (left-side) -arrow-.

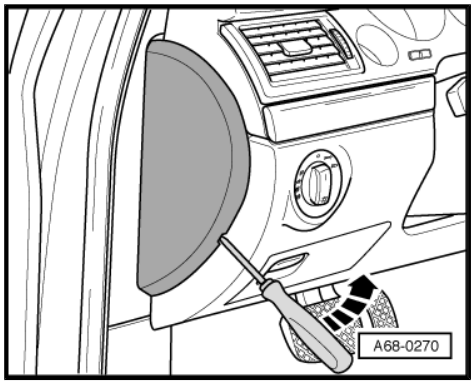

– Carefully separate trim panel -1- from dash panel using removal wedge -3409- -arrows-.

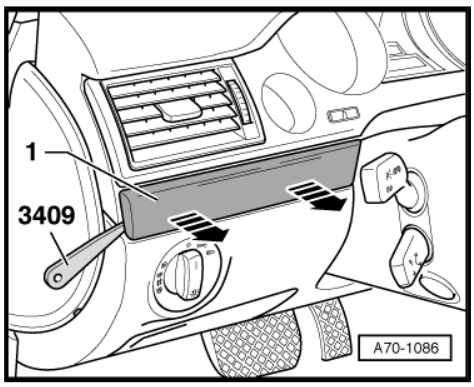

– Open coin holder.
– Slide trim for coin holder to left out of fastener -arrow- and detach.

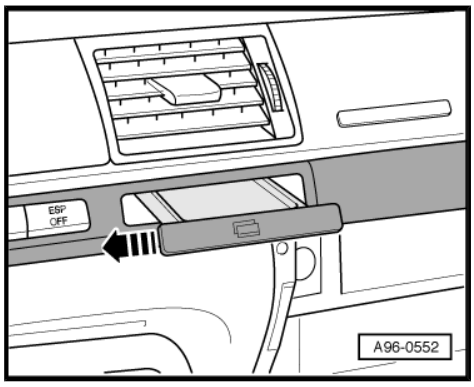

Protected by copyright. Copying for private or commercial purposes, in part or in whole, is not permitted unless authorised by AUDI AG. AUDI AG does not guarantee or accept any liability with respect to the correctness of information in this document. Copyright by AUDI AG.

– Open glove box.
– Starting from above glove box, carefully separate trim panel -1- with switch module from dash panel using removal wedge -3409- .

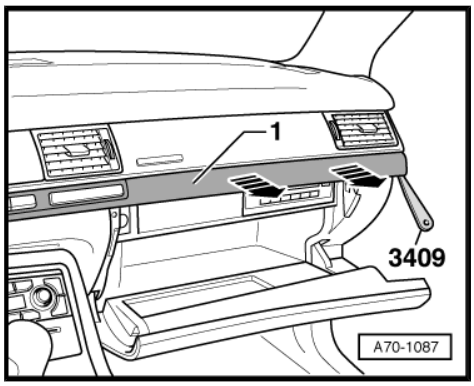

Note

Take particular care when unfastening clip at end of trim panel closest to driver.

– Unplug electrical connector.

– Unscrew driver's storage compartment -arrows-.
– Unplug electrical connectors.

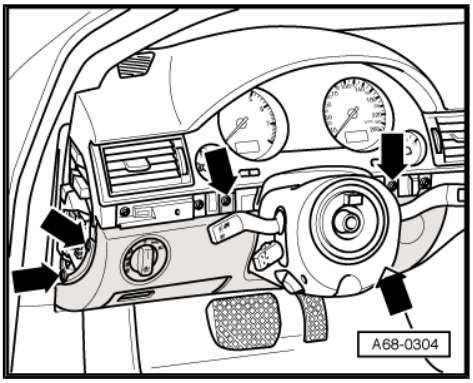

– On vehicles with knee airbag: Pull catch -2- in direction of arrow and unplug electrical connectors -1- and -3-.

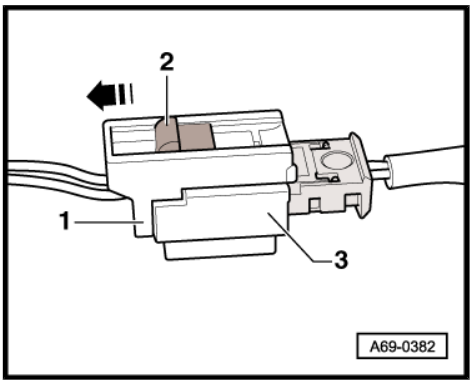

– Use screwdriver to prise off dash panel end trim (right-side) -arrow-.

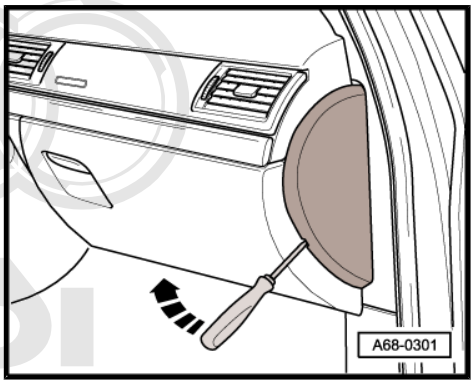

Protected by copyright. Copying for private or commercial purposes, in part or in whole, is not permitted unless authorised by AUDI AG. AUDI AG does not guarantee or accept any liability with respect to the correctness of information in this document. Copyright by AUDI AG.

– If fitted, remove CD changer as follows:
– Insert two keys of radio release tool -T10057- into front of CD changer.
♦ Top L - top left
♦ Top R - top right
– Pull CD changer out of mounting frame.
– Unplug electrical connector.
– Unplug connector for optical fibre.

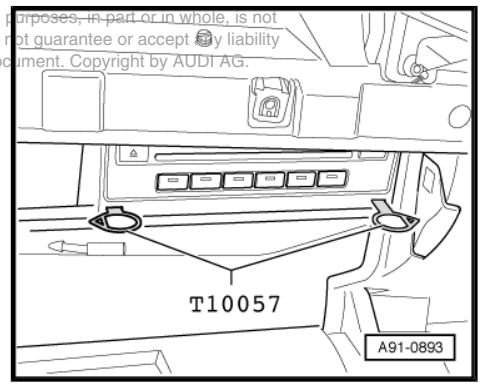

– Cover open wiring harness connector -2- of optical fibre cable with protective cap -VAS 6223/9- -Item 1-.

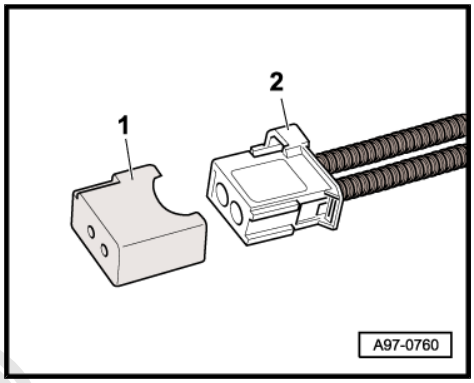

Note

The protective cap is designed to prevent the end face of the optical fibre from becoming soiled or damaged, as this would impair light transmission.

– Press catches on CD changer and pull release keys out of CD changer.

– If fitted, remove storage compartment from glove box. To do so, use small screwdriver to release retaining tabs -1- and -2- in -direction of arrow-.

– Pull storage compartment out of glove box.

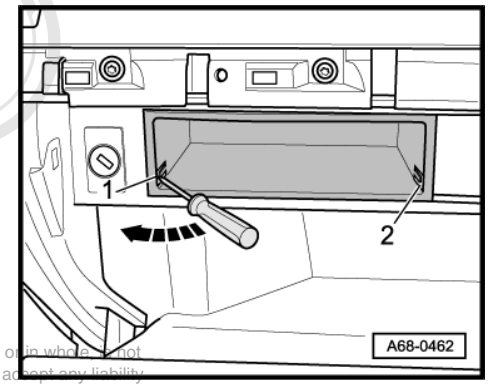

Protected by copyright. Copying for private or commercial purposes, in part or in whole, is not permitted unless authorised by AUDI AG. AUDI AG does not guarantee or accept any liability with respect to the correctness of information in this document. Copyright by AUDI AG.

– Remove bolts -arrows-.

– Remove bolts -1- and -2-.

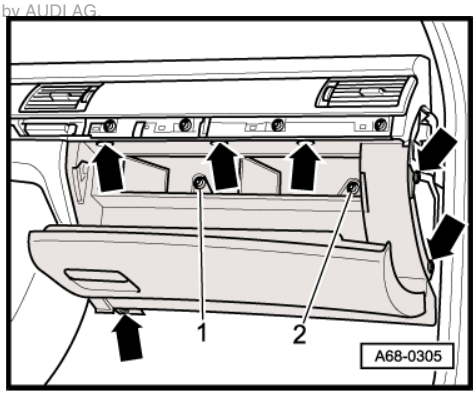

– Unplug electrical connector -1- for glove box wiring harness -2- from supply lead -3-.

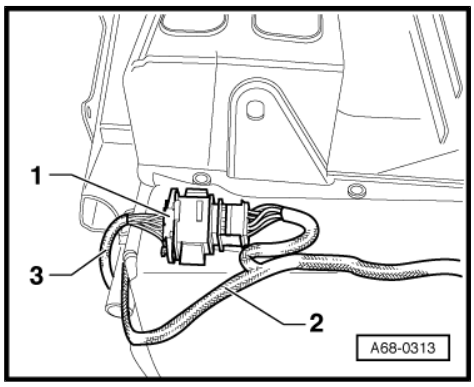

– On vehicles with knee airbag: Pull catch -2- in direction of arrow and unplug electrical connectors -1- and -3-.
– Remove glove box.

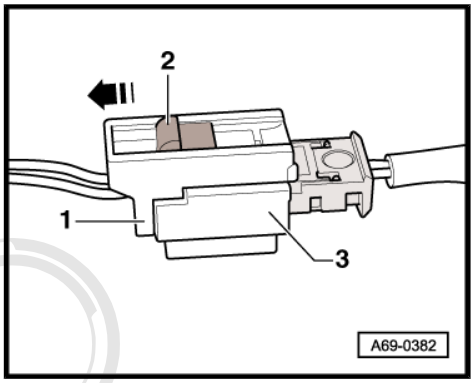

Vehicles without Climatronic operating and display unit (rear):

– Open ashtray (rear) -2-.
– Detach trim -1- from mounting frame -arrow-.
– Close ashtray.

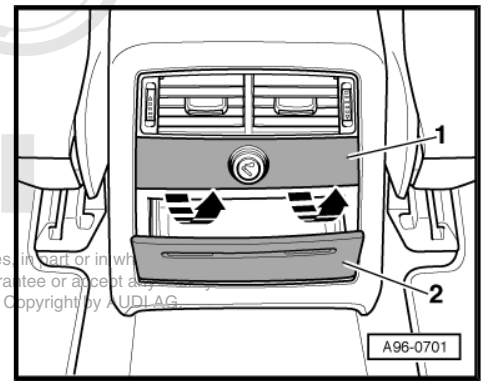

Protected by copyright. Copying for private or commercial purposes, in part or in whole, is not permitted unless authorised by AUDI AG. AUDI AG does not guarantee or accept any liability with respect to the correctness of information in this document. Copyright by AUDI AG.

– Detach ashtray from mounting frame in direction of -arrow-.

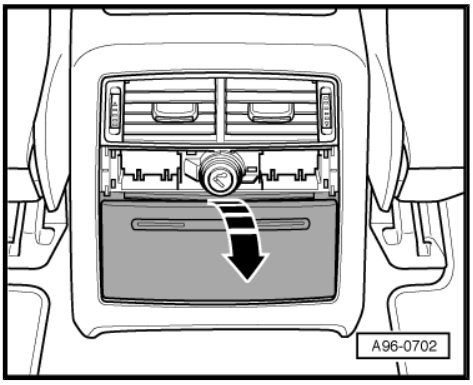

Vehicles with Climatronic operating and display unit (rear):

– Prise trim -1- off mounting frame using removal wedge -3409- -arrow-.

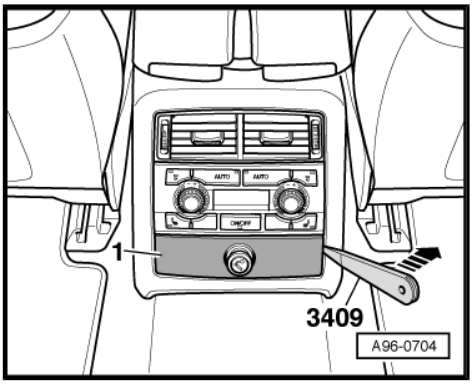

All vehicles:

– Remove bolts -arrows-.

– Detach mounting frame -1- with air vents and ashtray/rear Climatronic operating and display unit.

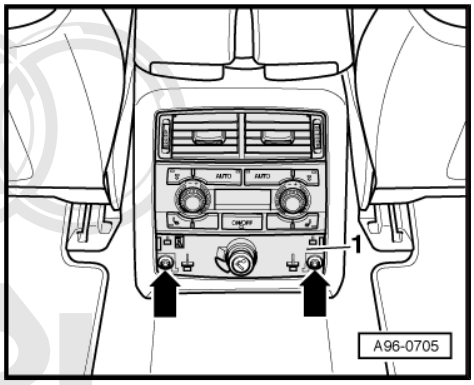

Protected by copyright. Copying for private or commercial purposes, in part or in whole, is not permitted unless authorised by AUDI AG. AUDI AG does not guarantee or accept any liability with respect to the correctness of information in this document. Copyright by AUDI AG.

Note

To unplug electrical connector at rear Climatronic operating and display unit, press catch -1-, turn retaining bracket in direction of -arrow- and unplug connector.

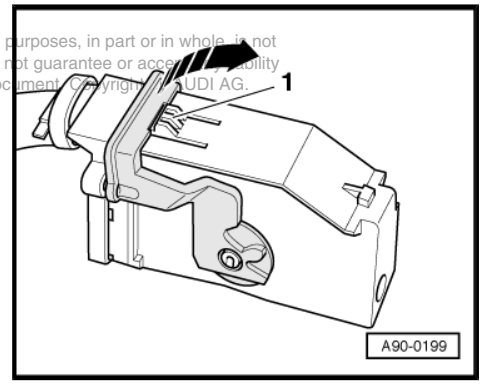

– Unplug electrical connectors -1 ... 4-.

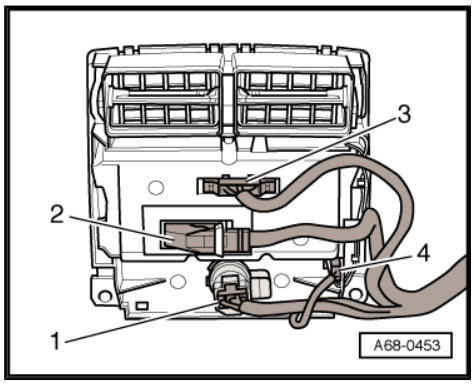

– Remove nuts -arrows- for rear centre console.

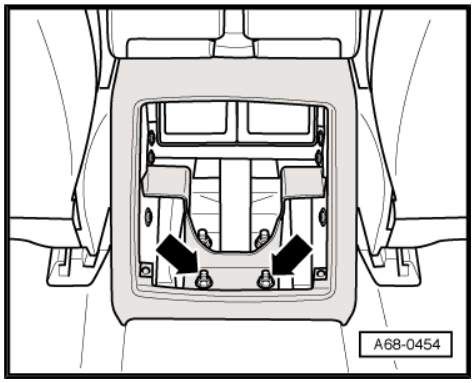

Vehicles with split centre armrest:

– Fold centre armrests upwards.

– Lift off trim for armrest hinge -arrow-.

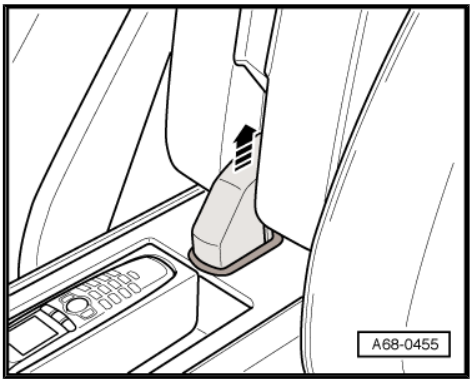

– Remove bolts -arrows-.

– Unplug connectors for storage compartment illumination (accessible through opening for rear ventilation).

– Lift off centre armrests.

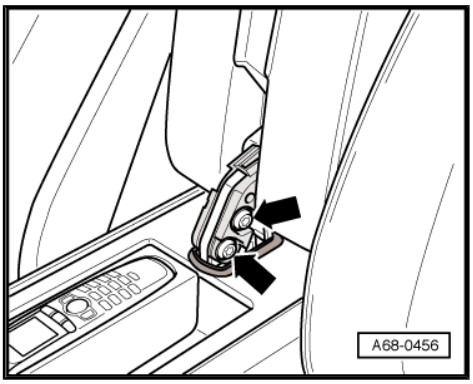

Protected by copyright. Copying or distribution of this document, in part or in whole, is not permitted unless authorised by AUDI AG. AUDI AG does not guarantee or accept any liability with respect to the correctness of information in this document. Copyright by AUDI AG.

Vehicles with one-piece centre armrest:

– Fold centre armrest upwards.

All vehicles:

– Use removal wedge -3409- to prise front corners of storage compartment out of centre console -arrow 1- and pull storage compartment forwards -arrow 2-.

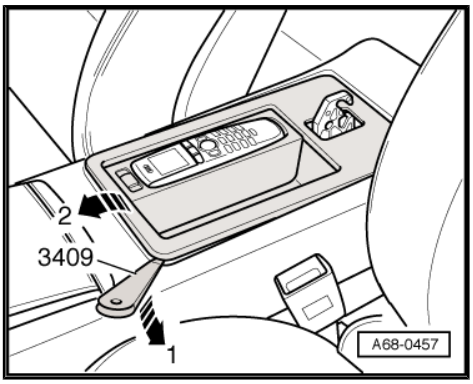

– Unplug electrical connectors -1- and -2- and detach storage compartment.

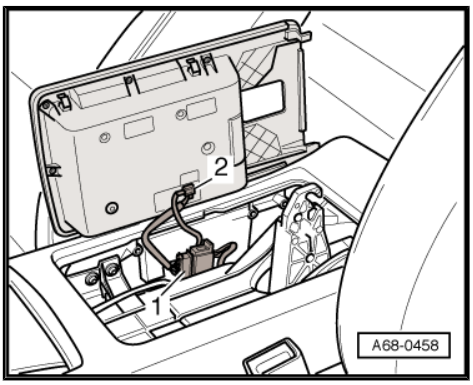

– Unplug electrical connectors -1-.
– Remove bolts -arrows- on both sides of centre console.

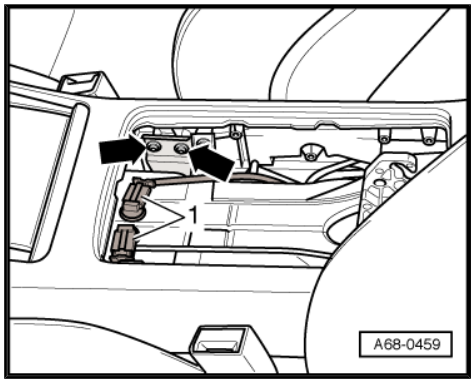

– Press button -arrow- and take out insert -1- for ashtray (front).

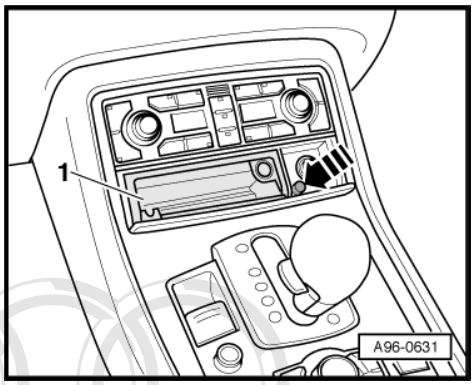

– Unscrew bolt -arrow- and remove housing for front ashtray.
– Unplug electrical connector.

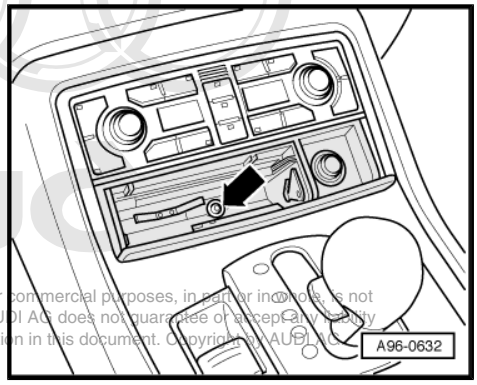

Protected by copyright. Copying for private or commercial purposes, in part or in whole, is not permitted unless authorised by AUDI AG. AUDI AG does not guarantee or accept any liability with respect to the correctness of information in this document. Copyright by AUDI AG.

– Lift off centre console switch trim -arrows-.
– Unplug electrical connectors.

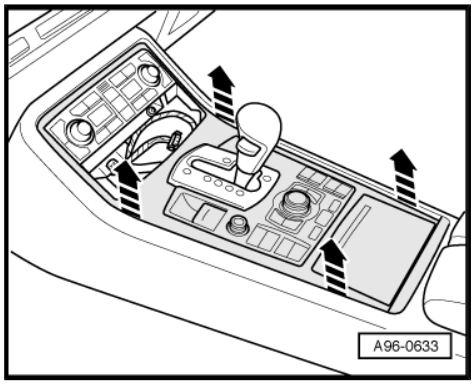

– Unscrew bolts -2-.
– Release retaining springs -1- with small screwdriver -arrow-.
– Swivel top edge of Climatronic control unit -J255- to rear.
– Take Climatronic control unit out of mounting.

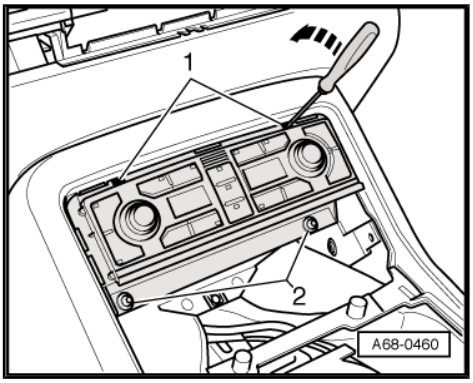

– Unplug electrical connectors -A ... E- by releasing retaining tab -G-.
– Unplug electrical connector -F-.

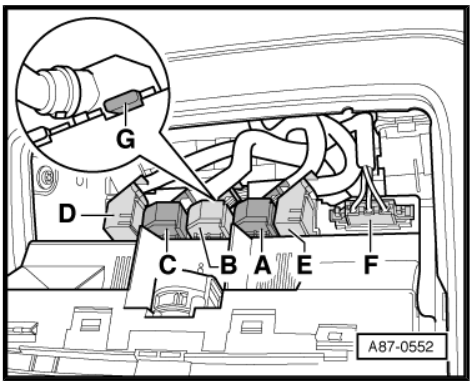

– Remove bolts -arrows-.

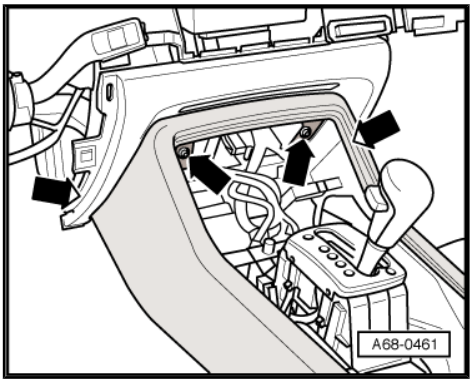

– Use screwdriver, for example, to press on rocker -A- of selector lever manual release mechanism.
– At the same time, move selector lever from „P“ to „D“.

Protected by copyright. Copying for private or commercial purposes, in part or in whole, is not permitted unless authorised by AUDI AG. AUDI AG does not guarantee or accept any liability with respect to the correctness of information in this document. Copyright by AUDI AG.

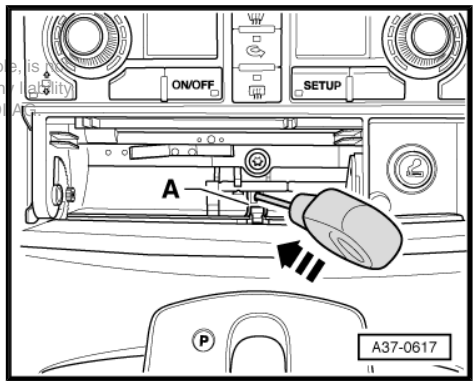

– Turn collar -1- to left and push it down as far as it will go.
– Lift off knob -2- for selector lever.

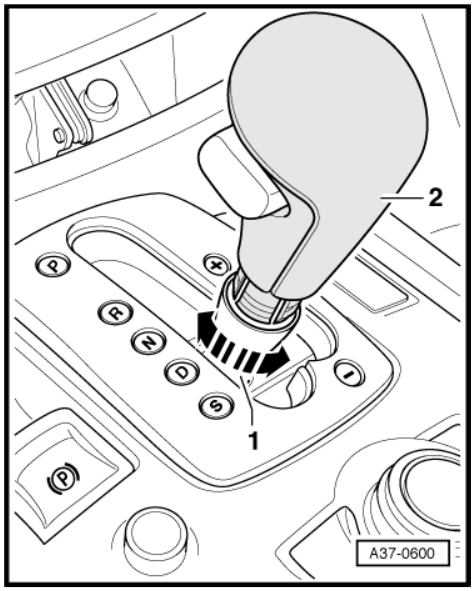

– Release fasteners -1- on either side of shift mechanism -arrow- and lift up trim panel -3-.
– Unplug electrical connector -2- and detach trim panel.
– Raise centre console at rear and unplug connectors on underside of centre console.
– Detach centre console towards rear.

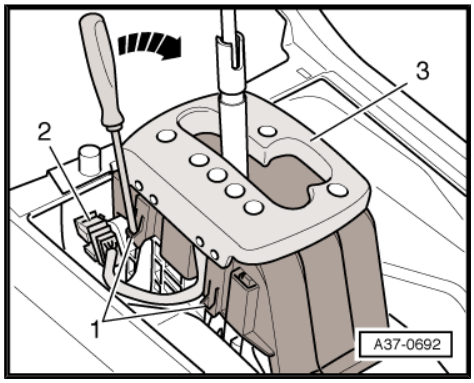

Installing

Installation is carried out in reverse order; note the following:

– When fitting trim panel -1- with switch panel make sure both catches are inserted in centre of trim panel between dash panel and monitor housing -arrows-.
– With ignition switched on, connect battery earth wire ⇒ Electrical system; Rep. gr. 27 .

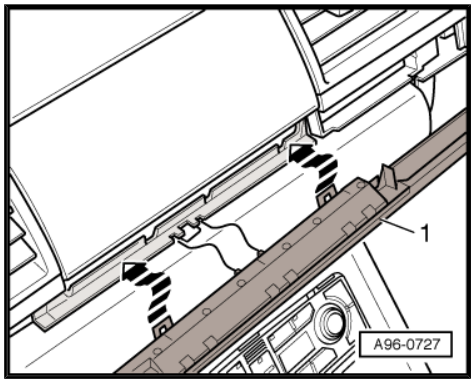

Tightening torques

Component		Nm
Centre console to:	Body	4
	Dash panel	4
Split armrest to support		18
Air vents to rear centre console		2.5
Storage compartment (driver side) to:	Central tube	4
	Dash panel	4
Glove box to:	Central tube	4
	Dash panel	4

Protected by copyright. Copying for private or commercial purposes, in part or in whole, is not permitted unless authorised by AUDI AG. AUDI AG does not guarantee or accept any liability with respect to the correctness of information in this document. Copyright by AUDI AG.

2.4 Removing and installing floor covering rod (rear and front)

Removing

– Pull floor covering out of rods at front and rear.

– Unclip floor covering rods from centre console.

Installing

Note

Always start by fitting rear left or right floor covering rod.

– Position rods -1- and -2- on floor covering -3-.

– Make sure floor covering -3- is correctly positioned in clips -5-.

– Attach rods -1- and -2- to centre console -4-.

– Press floor covering -3- into position. Rods must engage in centre console clips -5-.

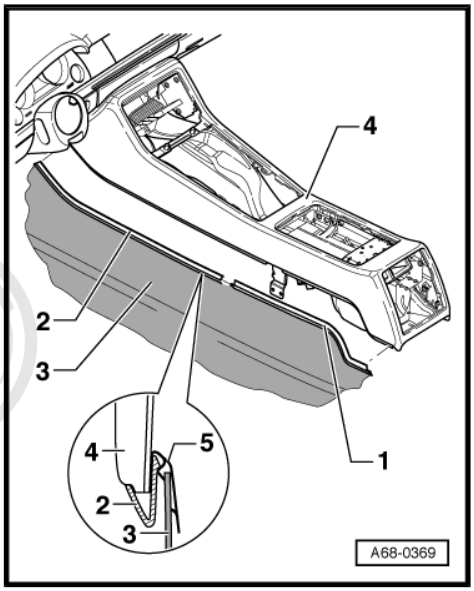

2.5 Removing and installing air conditioner operating unit (front)

Protected by copyright. Copying for private or commercial purposes, in part or in whole, is not permitted unless authorised by AUDI AG. AUDI AG does not guarantee or accept any liability with respect to the correctness of information in this document. Copyright by AUDI AG.

Special tools and workshop equipment required

♦ Torque wrench -V.A.G 1783/-

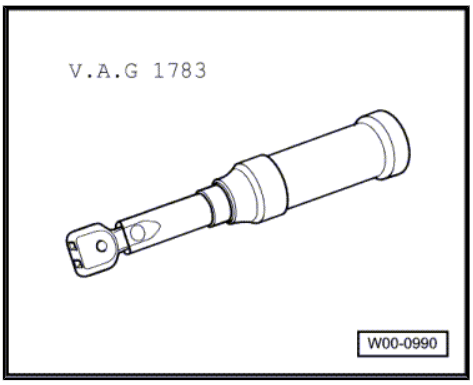

Removing

– Move selector lever to „S“.

– Switch off ignition.

Removing ashtray (front)

– Open ashtray (front).
– Press button -arrow-.
– Pull out ashtray insert -1-.

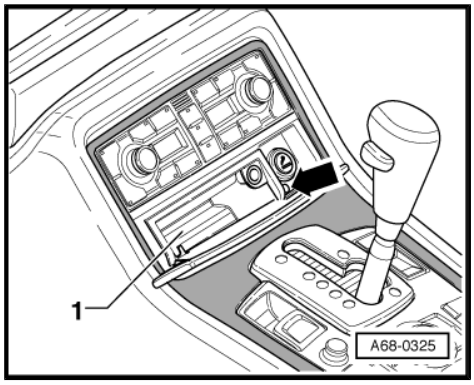

– Remove bolt -1-.
– Pull front ashtray -2- out of centre console.
– Unplug electrical connector.

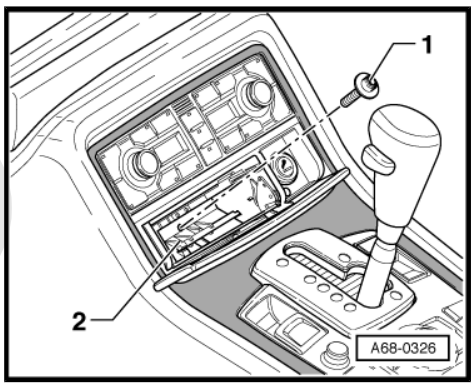

Removing trim for centre console with multimedia operating unit

– Lift off trim for centre console with multimedia operating unit -1-.

2 - Pin

3 - Spring clip

4 - Centre console

– Unplug electrical connectors.
– Detach trim for centre console with multimedia operating unit.

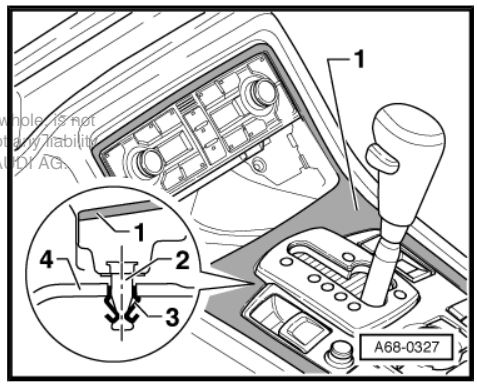

Protected by copyright. Copying for private or commercial purposes, in part or in whole, is not permitted unless authorised by AUDI AG. AUDI AG does not guarantee or accept any liability with respect to the correctness of information in this document. Copyright by AUDI AG.

Removing air conditioner operating unit (front)

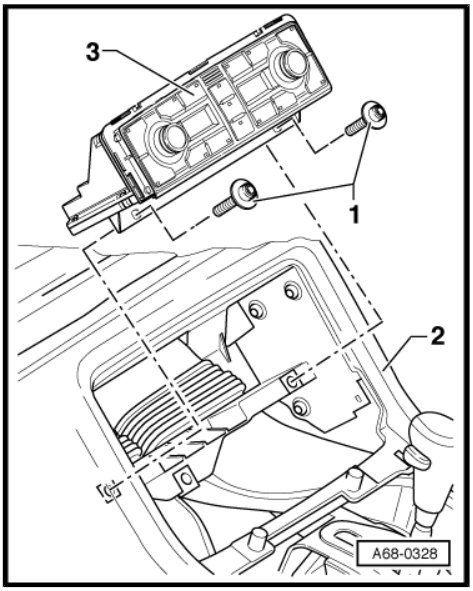

– Unscrew bolts -1- (2x).
– Pull air conditioner operating unit (front) -3- out of centre console -2-.
– Unplug electrical connectors.
– Take out air conditioner operating unit (front).

Installing

Install in reverse order of removal. Observe the following:

Observe following sequence when fitting trim for centre console with multimedia operating unit, air conditioner operating unit (front) and ashtray (front):

– Plug in connectors.
– Insert air conditioner operating unit (front) in centre console, but do not bolt on.
– Plug in electrical connectors at multimedia operating unit.
– Clip trim for centre console with multimedia operating unit into centre console.
– Centrally align trim for centre console with multimedia operating unit.
– Tighten air conditioner operating unit (front) to specified torque.
– Install ashtray (front) ⇒ page 31 .

Tightening torques

Air conditioner operating unit (front) to centre console: 4 Nm

All other tightening torques can be found in the relevant section.

Protected by copyright. Copying for private or commercial purposes, in part or in whole, is not permitted unless authorised by AUDI AG. AUDI AG does not guarantee or accept any liability with respect to the correctness of information in this document. Copyright by AUDI AG.

2.6 Removing and installing ashtray (front)

Special tools and workshop equipment required

♦ Torque wrench -V.A.G 1783/-

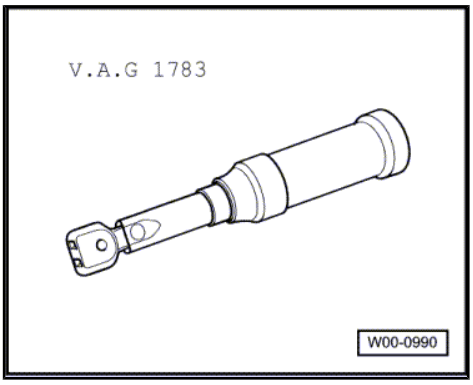

Removing

– Move selector lever to „S“.
– Switch off ignition.
– Open ashtray (front).
– Press button -arrow-.
– Pull out ashtray insert -1-.

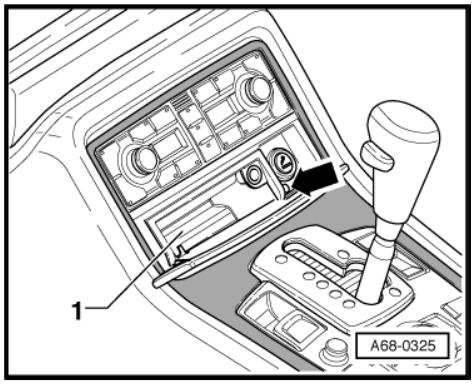

Protected by copyright. Copying for private or commercial purposes, in part or in whole, is not permitted unless authorised by AUDI AG. AUDI AG does not guarantee or accept any liability with respect to the correctness of information in this document. Copyright by AUDI AG.

– Remove bolt -1-.
– Pull ashtray (front) -2- out of centre console.
– Unplug electrical connector.

Installing

Install in reverse order of removal.

Tightening torque:

Ashtray (front) to centre console: 4 Nm

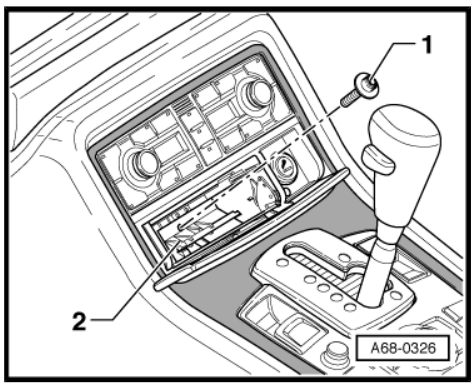

2.7 Renewing trim for ashtray (front)

Removing

– Remove ashtray (front) ⇒ page 31 .
– Press lug -1- out of spring clip -2-.
– Detach trim -3-.

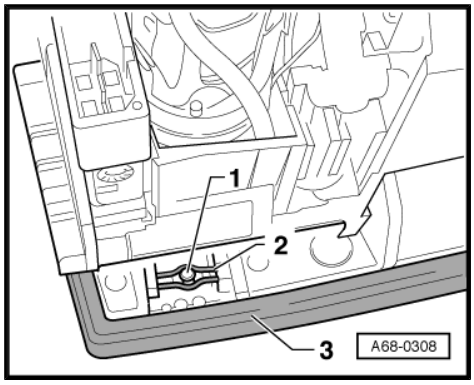

Installing

– Position upper edge of trim -1- on tabs -3- of ashtray cover -2-.

4 - Pin

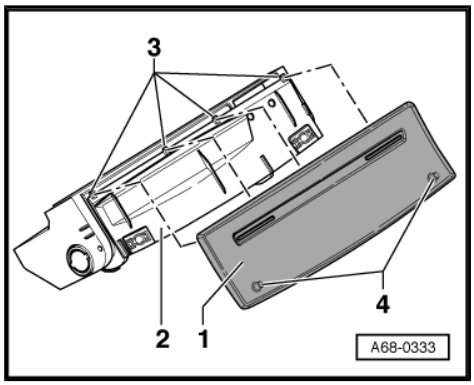

– Press on lower edge of trim -3- to engage lugs -1- in spring clips -2-.

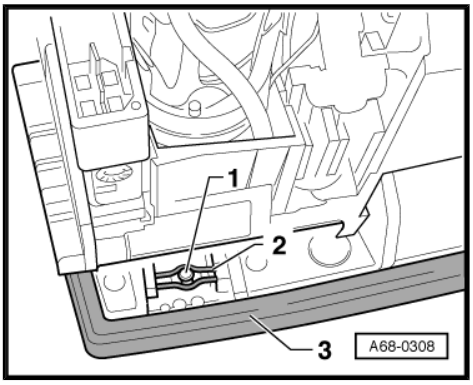

2.8 Removing and installing cigarette lighter (front)

Cigarette lighter -2- installed in front ashtray -1- cannot be renewed separately.

If defective, renew cigarette lighter together with front ashtray.

Removing and installing ashtray (front) ⇒ page 31

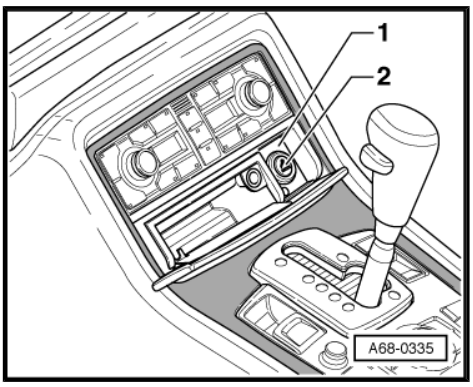

2.9 Removing and installing trim for centre console with multimedia operating unit

Removing

– Switch off ignition.

– Remove ashtray (front) ⇒ page 31 .

Removing trim for centre console with multimedia operating unit

– Lift trim for centre console -3- with multimedia operating unit -4- and front centre console cup holder -5- off centre console -1-.

Protected by copyright. Copying for private or commercial purposes, in part or in whole, is not permitted unless authorised by AUDI AG. AUDI AG does not guarantee or accept any liability with respect to the correctness of information in this document. Copyright by AUDI AG.

6 - Spring clip

– Unplug electrical connectors.

– Detach trim for centre console with multimedia operating unit and front centre console cup holder.

– Remove multimedia operating unit ⇒ Rep. gr. 91 .

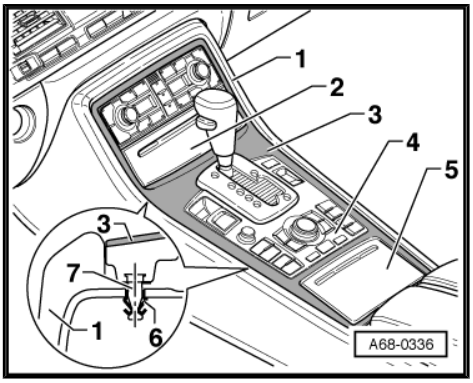

Removing centre console cup holder

– Unscrew bolts -1- (4x).

– Detach front centre console cup holder -2- from trim for centre console with multimedia operating unit -3-.

Installing

Install in reverse order of removal.

Tightening torques

Refer to appropriate section for tightening torques.

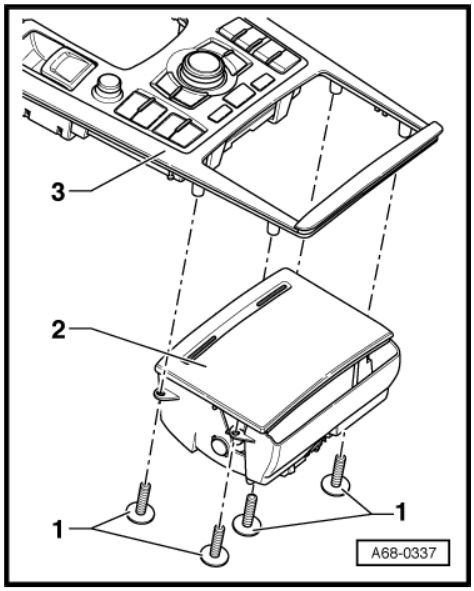

2.10 Removing and installing front centre console cup holder

Special tools and workshop equipment required

♦ Torque wrench -V.A.G 1783/-

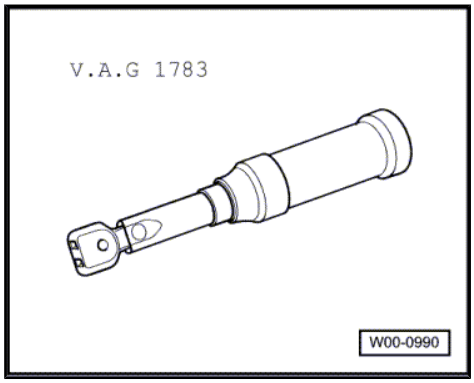

Protected by copyright. Copying for private or commercial purposes, in part or in whole, is not permitted unless authorised by AUDI AG. AUDI AG does not guarantee or accept any liability with respect to the correctness of information in this document. Copyright by AUDI AG.

Removing

– Remove trim for centre console with multimedia operating unit ⇒ page 33 .

– Unscrew bolts -1- (4x).

– Detach front centre console cup holder -2- from trim for centre console with multimedia operating unit -3-.

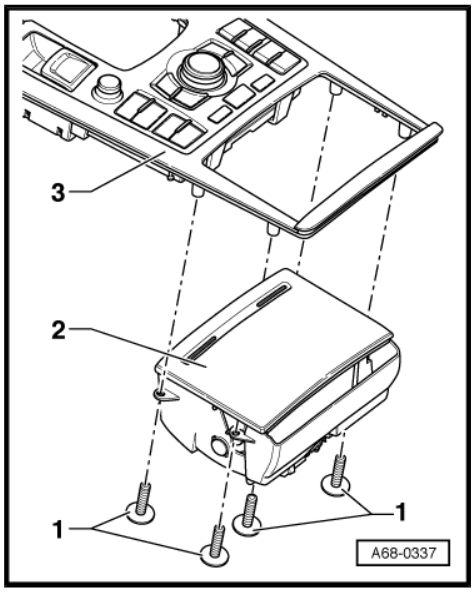

– Open front centre console cup holder -1-.

– Take out cup holder insert -2-.

Installing

Install in reverse order of removal.

Tightening torque:

Front centre console cup holder to trim for centre console with multimedia operating unit: 4 Nm

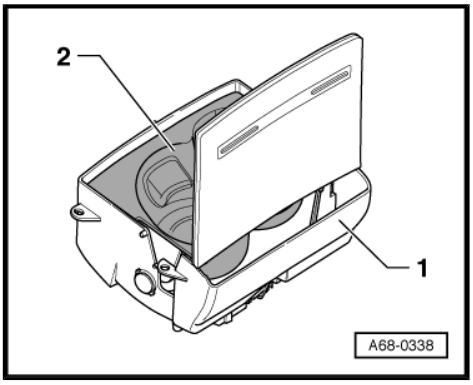

2.11 Removing and installing rear vent (2-zone climate control)

Special tools and workshop equipment required

♦ Torque wrench -V.A.G 1783/-

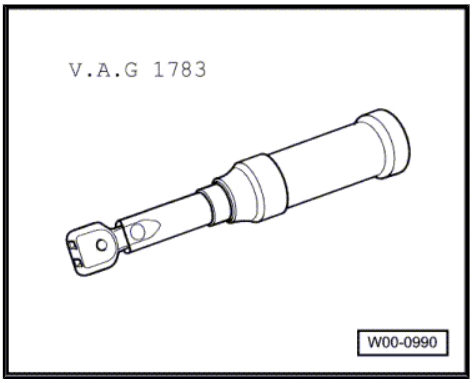

Removing

Removal is described for a rear vent (2-zone climate control) without seat potentiometer.

The removal procedure with seat potentiometer is similar.

2.11.1 Removing storage compartment (rear)

– Switch off ignition.

– Pull storage compartment (rear) -1- out of centre console -2-.

3 - Trim for rear centre console

4 - Rear vent (2-zone climate control)

5 - Cigarette lighter (rear)

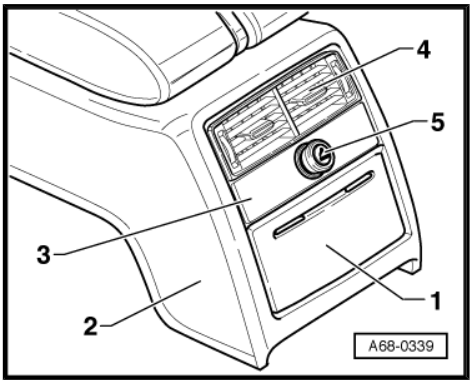

Protected by copyright. Copying for private or commercial purposes, in part or in whole, is not permitted unless authorised by AUDI AG. AUDI AG does not guarantee or accept any liability with respect to the correctness of information in this document. Copyright by AUDI AG.

2.11.2 Removing rear vent (2-zone climate control)

– Unscrew bolts -1- (2x).

– Pull rear vent (2-zone climate control) -2- out of centre console -3-.

– Unplug electrical connectors.

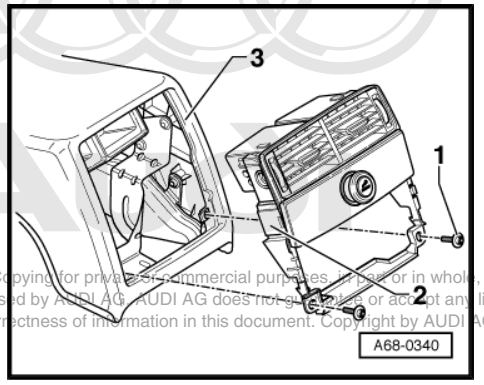

Protected by copyright. Copying for private or commercial purposes, in part or in whole, is not permitted unless authorised by AUDI AG. AUDI AG does not guarantee or accept any liability with respect to the correctness of information in this document. Copyright by AUDI AG.

2.11.3 Removing trim for rear centre console

– Unclip trim for rear centre console -1-.

2 - Rear vent (2-zone climate control)

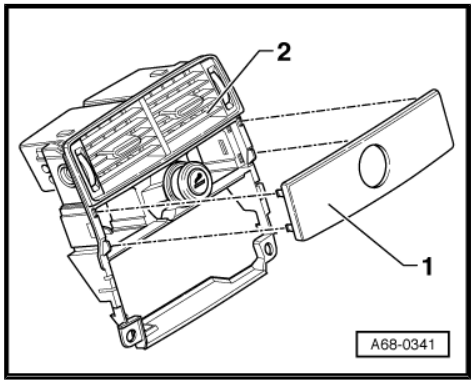

2.11.4 Removing cigarette lighter

– Turn cigarette lighter -1- as far as it will go in direction of arrow.

– Pull cigarette lighter out of mounting in rear vent.

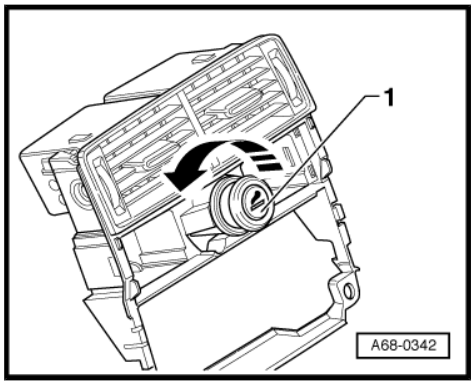

2.11.5 Installing

Install in reverse order of removal. Observe the following:

♦ Observe sequence when fitting cigarette lighter and trim for rear centre console.

– Plug in electrical connector.

– Insert cigarette lighter with spring pin -1- in mounting -2- in rear vent.
– Turn cigarette lighter clockwise as far as stop.
– Clip trim for rear centre console into rear vent (2-zone climate control).

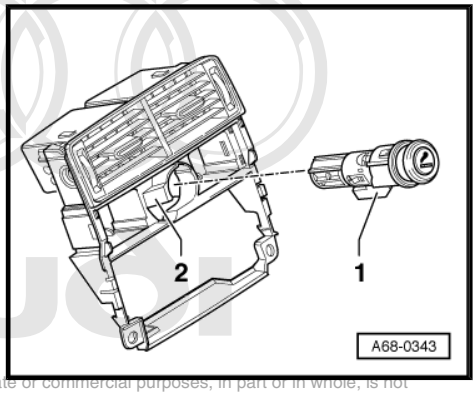

Protected by copyright. Copying for private or commercial purposes, in part or in whole, is not permitted unless authorised by AUDI AG. AUDI AG does not guarantee or accept any liability with respect to the correctness of information in this document. Copyright by AUDI AG.

2.11.6 Tightening torque:

Rear vent (2-zone climate control): 4 Nm

2.12 Removing and installing trim for rear centre console (rear vent, 2-zone climate control)

Removing

– Unclip trim for rear centre console -1-.

2 - Rear vent (2-zone climate control)

Installing

Install in reverse order of removal.

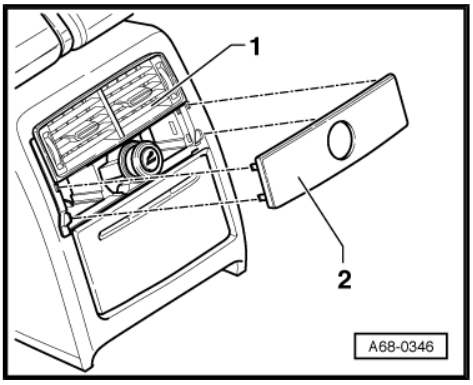

2.13 Removing and installing rear cigarette lighter (rear vent, 2-zone climate control)

Removing

– Switch off ignition.
– Unclip trim for rear centre console -1-.
– Turn cigarette lighter -2- as far as it will go in direction of arrow.
– Pull cigarette lighter out of mounting in rear vent.
– Unplug electrical connector.

Installing

Install in reverse order of removal. Observe the following:

♦ Observe sequence when fitting cigarette lighter and trim for rear centre console.
– Plug in electrical connector.

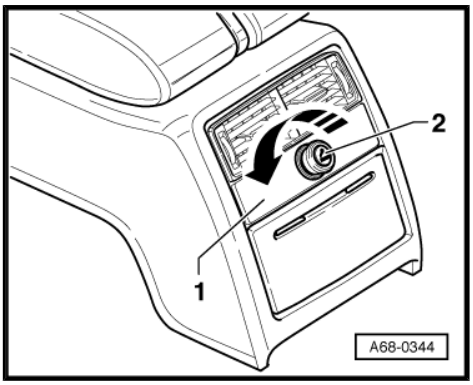

– Insert cigarette lighter with spring pin -1- in mounting -2- in rear vent.
– Turn cigarette lighter clockwise as far as stop.
– Clip trim for rear centre console into rear vent (2-zone climate control).

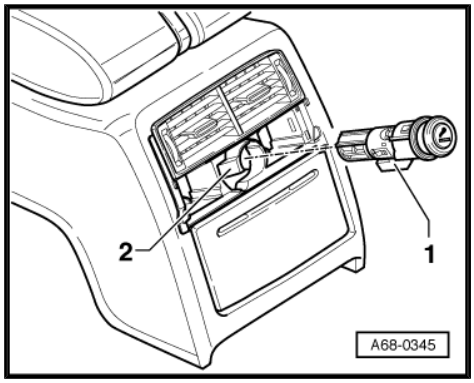

2.14 Removing and installing storage compartment (rear)

Removing

– Switch off ignition.
– Pull storage compartment (rear) -1- out of centre console -2-.
– Unplug electrical connector.

Installing

Install in reverse order of removal.

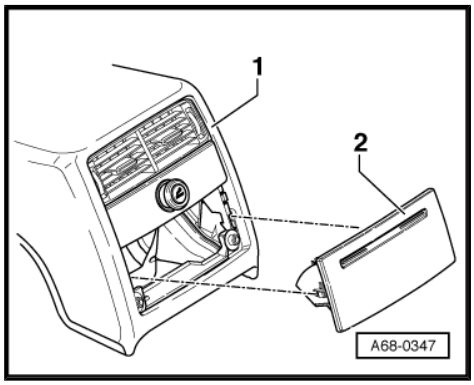

2.15 Renewing trim for storage compartment (rear)

Removing

– Remove storage compartment (rear) ⇒ page 38 .
– Press lug -1- out of spring clip -2-.
– Detach trim -3-.

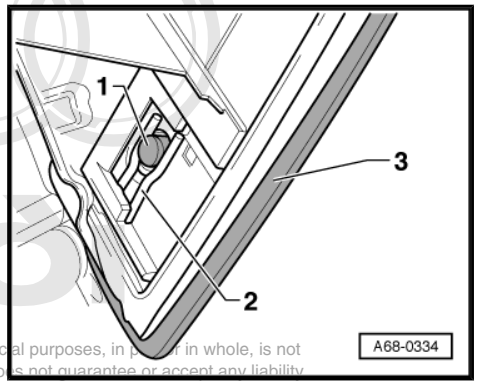

Protected by copyright. Copying for private or commercial purposes, in part or in whole, is not permitted unless authorised by AUDI AG. AUDI AG does not guarantee or accept any liability with respect to the correctness of information in this document. Copyright by AUDI AG.

Installing

– Position upper edge of trim -1- on tabs -3- of storage compartment lid -2-.

4 - Pin

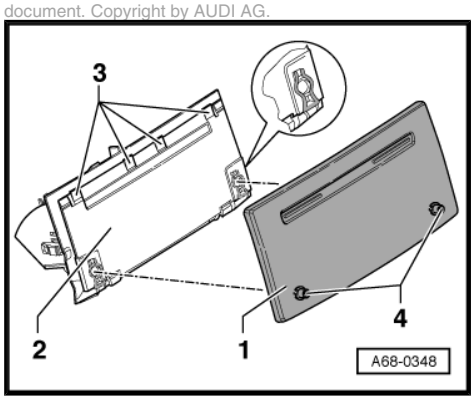

– Press on lower edge of trim -3- to engage lugs -1- in spring clips -2-.

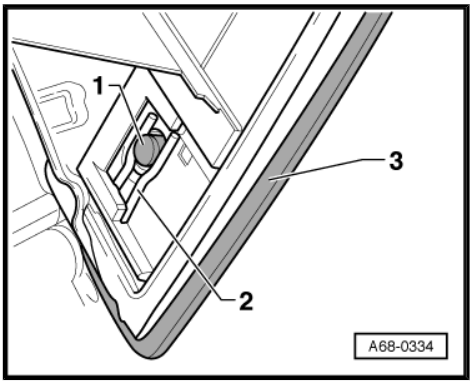

2.16 Removing and installing centre console storage compartment (one-piece centre armrest)

1 - Storage compartment

❑ With handset cradle (optional)

♦ Removing

– Switch off ignition.
– Swivel centre armrest upwards.
– Unclip storage compartment -1-.
– Swivel storage compartment upwards and at the same time pull it in direction of travel out of centre console -2-.
– Unplug connector on vehicles with handset cradle -3-.
– Take out storage compartment -1-.

♦ Installing

Install in reverse order of removal.

2 - Centre console

3 - Handset cradle

❑ Removing and installing ⇒ Rep. gr. 91

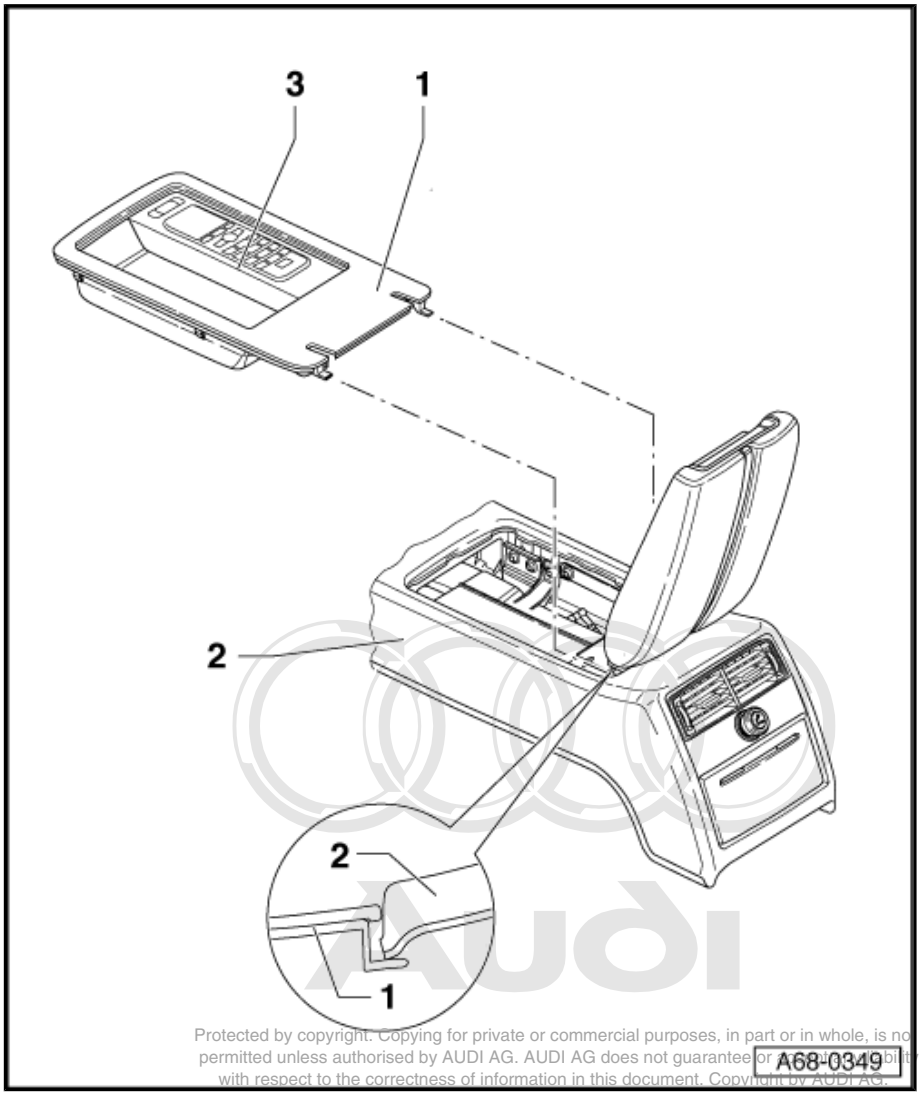

Protected by copyright. Copying for private or commercial purposes, in part or in whole, is not permitted unless authorised by AUDI AG. AUDI AG does not guarantee or assume any liability with respect to the correctness of information in this document. Copyright by AUDI AG.

2.17 Removing and installing centre console storage compartment (split centre armrest)

Special tools and workshop equipment required

♦ Torque wrench -V.A.G 1410-

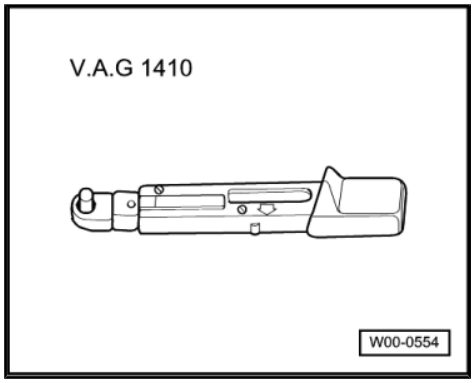

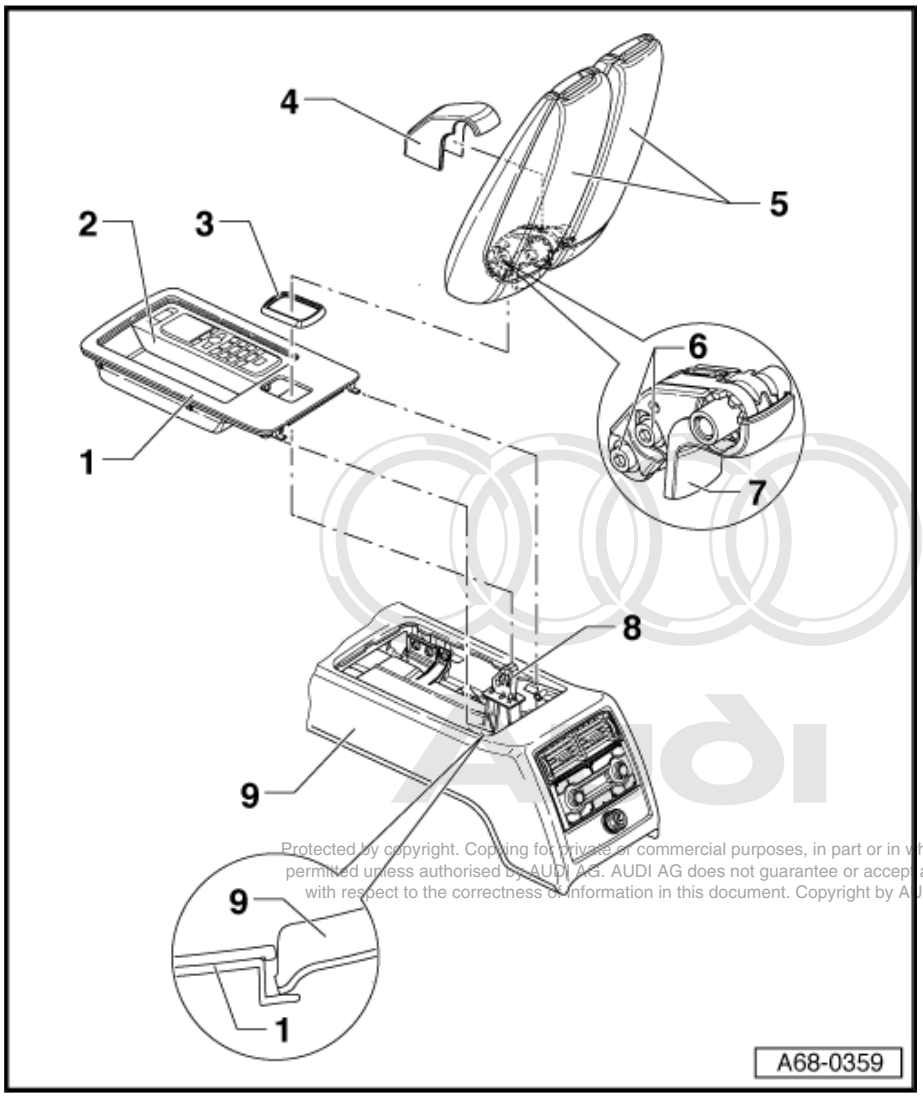

Protected by copyright. Copying for private or commercial purposes, in part or in whole, is not permitted unless authorised by AUDI AG. AUDI AG does not guarantee or accept any liability with respect to the correctness of information in this document. Copyright by AUDI AG.

1 - Storage compartment

❑ With handset cradle (optional)

♦ Removing

- Switch off ignition.
- Swivel centre armrest -5- upwards.
- Detach upper support trim -4-.
- Unscrew bolts -6- (2x).
- Detach centre armrest -5- from lower support -8-.
- Unclip grommet -3-.
- Unclip storage compartment -1-.
- Swivel storage compartment upwards and at the same time pull it in direction of travel out of centre console -9-.
- Unplug connector on vehicles with handset cradle -2-.
- Take out storage compartment -1-.

♦ Installing

Install in reverse order of removal.

2 - Handset cradle

❑ Removing and installing ⇒ Rep. gr. 91

3 - Grommet

4 - Upper support trim

5 - Centre armrest

❑ Split version

6 - Bolts (2x), 18 Nm

❑ Included in scope of delivery of centre armrest

7 - Upper support

❑ Included in scope of delivery of centre armrest

8 - Lower support

9 - Centre console

2.18 Removing and installing rear vent (4-zone climate control)

Special tools and workshop equipment required

- Torque wrench -V.A.G 1783/-

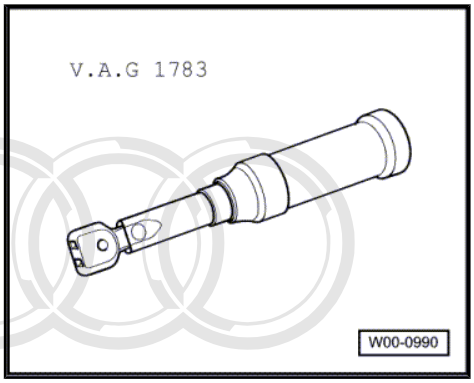

2.18.1 Overview of fitting locations

1 - Trim for rear centre console

2 - Cigarette lighter (rear)

3 - Air conditioner operating unit (rear)

4 - Rear vent (4-zone climate control)

5 - Centre console

– Switch off ignition.

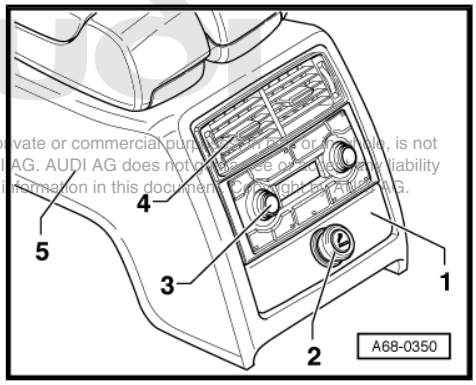

Protected by copyright. Copying for private or commercial purposes, in part or in whole, is not permitted unless authorised by AUDI AG. AUDI AG does not guarantee or assume any liability with respect to the correctness of information in this document. Copyright by AUDI AG.

2.18.2 Removing rear vent (4-zone climate control)

– Unclip trim for rear centre console -1-.

– Unscrew bolts -2- (2x).

– Pull rear vent (4-zone climate control) -4- out of centre console -3-.

– Unplug electrical connectors.

– Take out rear vent (4-zone climate control).

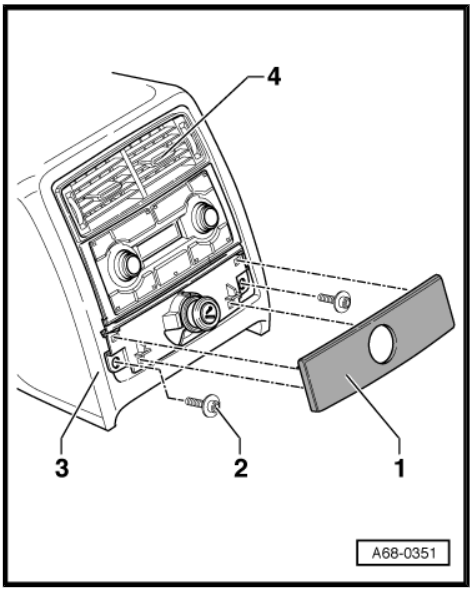

2.18.3 Removing air conditioner operating unit (rear)

– Pull air conditioner operating unit (rear) -1- out of rear vent (4-zone climate control) -2-.

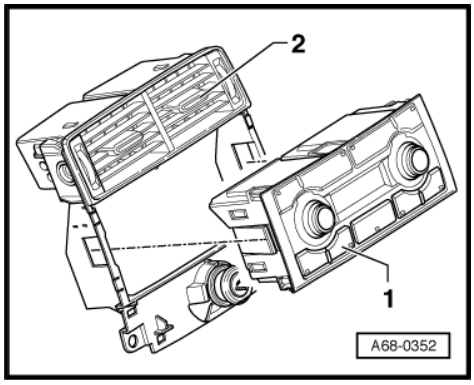

2.18.4 Removing and installing cigarette lighter (rear)

– Turn cigarette lighter -1- as far as it will go in direction of arrow.

– Pull cigarette lighter out of mounting in rear vent.

Install in reverse order of removal. Observe the following:

♦ Observe sequence when fitting cigarette lighter and trim for rear centre console.

– Plug in connectors.

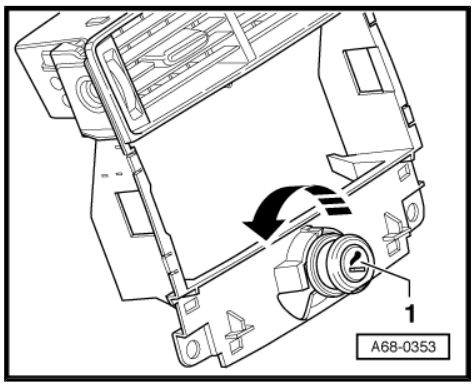

– Insert cigarette lighter with spring pin -1- in mounting -2- in rear vent.

– Turn cigarette lighter clockwise as far as stop.

– Install rear vent (4-zone climate control in centre console).

– Clip trim for rear centre console into rear vent (4-zone climate control).

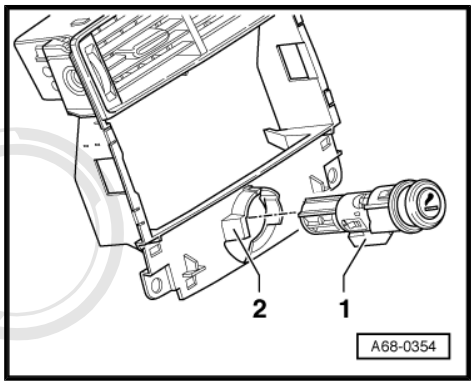

2.18.5 Tightening torque:

Rear vent (4-zone climate control) to centre console: 4 Nm

Protected by copyright. Copying for private or commercial purposes, in part or in whole, is not permitted unless authorised by AUDI AG. AUDI AG does not guarantee or accept any liability with respect to the correctness of information in this document. Copyright by AUDI AG.

2.19 Removing and installing rear air conditioner operating unit (4-zone climate control)

Removing

– Switch off ignition.

– Unclip trim for rear centre console -1-.

2 - Rear vent (4-zone climate control)

3 - Centre console

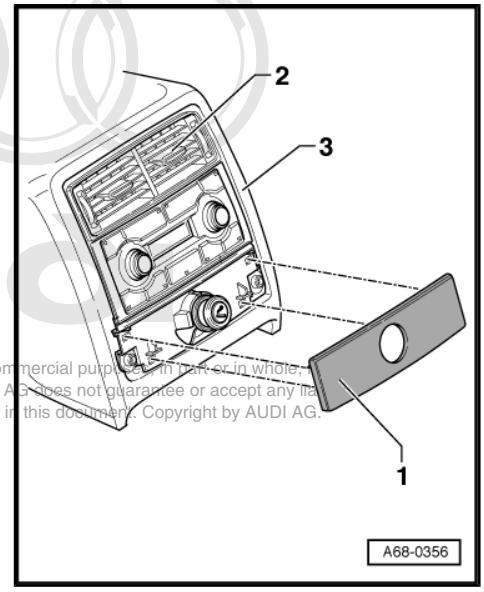

Protected by copyright. Copying for private or commercial purposes, in part or in whole, is not permitted unless authorised by AUDI AG. AUDI AG does not guarantee or accept any liability with respect to the correctness of information in this document. Copyright by AUDI AG.

– Pull air conditioner operating unit (rear) -1- out of centre console -2-.

– Unplug electrical connectors.

– Take out air conditioner operating unit (rear).

Installing

Install in reverse order of removal.

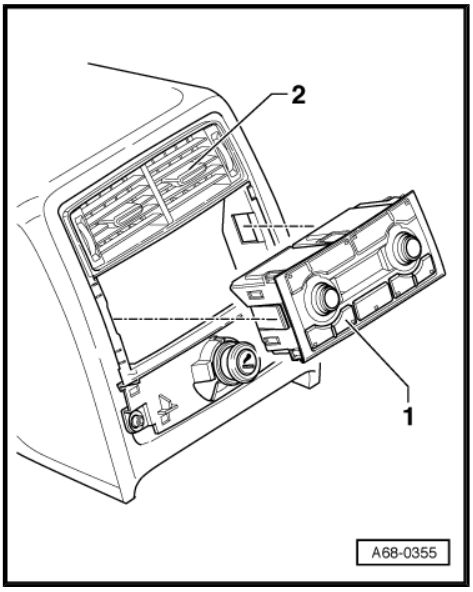

2.20 Removing and installing rear cigarette lighter (rear vent, 4-zone climate control)

Removing

– Switch off ignition.

– Unclip trim for rear centre console -1-.

– Turn cigarette lighter -2- as far as it will go in direction of arrow.

– Pull cigarette lighter out of mounting in rear vent.

– Unplug electrical connector.

Installing

Install in reverse order of removal. Observe the following:

♦ Observe sequence when fitting cigarette lighter and trim for rear centre console.

– Plug in electrical connector.

Protected by copyright. Copying for private or commercial purposes, in part or in whole, is not permitted unless authorised by AUDI AG. AUDI AG does not guarantee or accept any liability with respect to the correctness of information in this document. Copyright by AUDI AG.

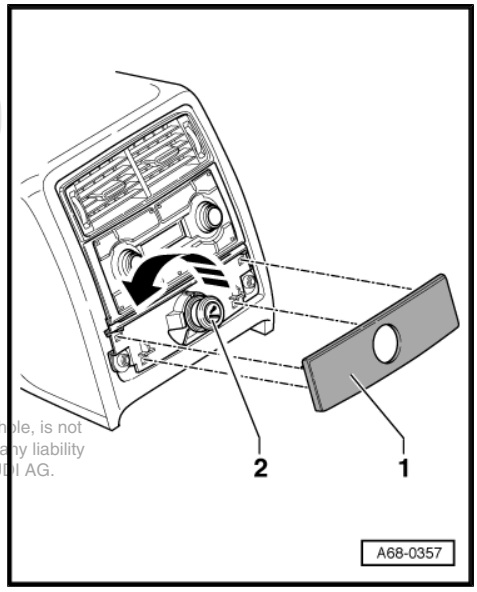

– Insert cigarette lighter with spring pin -1- in mounting -2- in rear vent.

– Turn cigarette lighter clockwise as far as stop.

– Clip trim for rear centre console into rear vent (4-zone climate control).

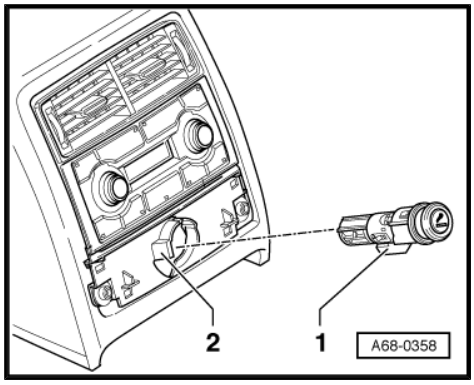

2.21 Removing and installing trim for rear centre console (rear vent, 4-zone climate control)

Removing

– Unclip trim for rear centre console -1-.

2 - Rear vent (4-zone climate control)

3 - Centre console

Installing

Install in reverse order of removal.

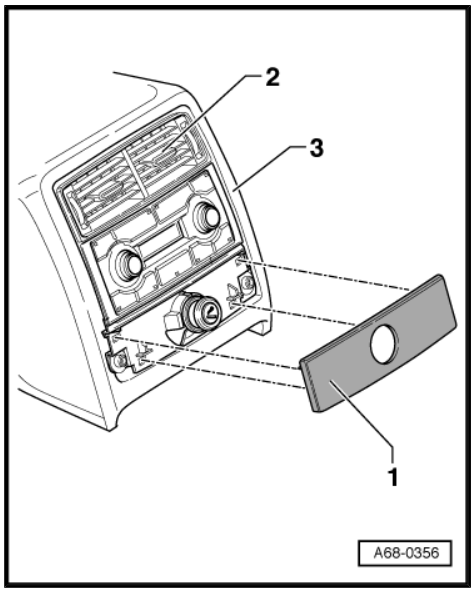

2.22 Removing and installing rear air distributor and rear air duct (2 and 4-zone climate control)

Special tools and workshop equipment required

♦ Torque wrench -V.A.G 1783/-

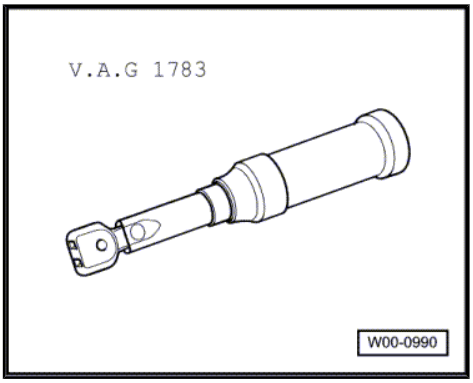

1 - Centre console

2 - Bolts (4x), 2 Nm

3 - Centre console air distributor

2-zone climate control
- ❑ Rear left vent warm air and cold air flap control motor (-V220-) -4-

4-zone climate control
- ❑ Rear left vent warm air and cold air flap control motor (-V220-) -4-
- ❑ Rear right vent warm air and cold air flap control motor (-V221-) -5-
- ❑ Rear left centre console temperature sensor (-G311-) -7-
- ❑ Rear right centre console temperature sensor (-G312-) -6-

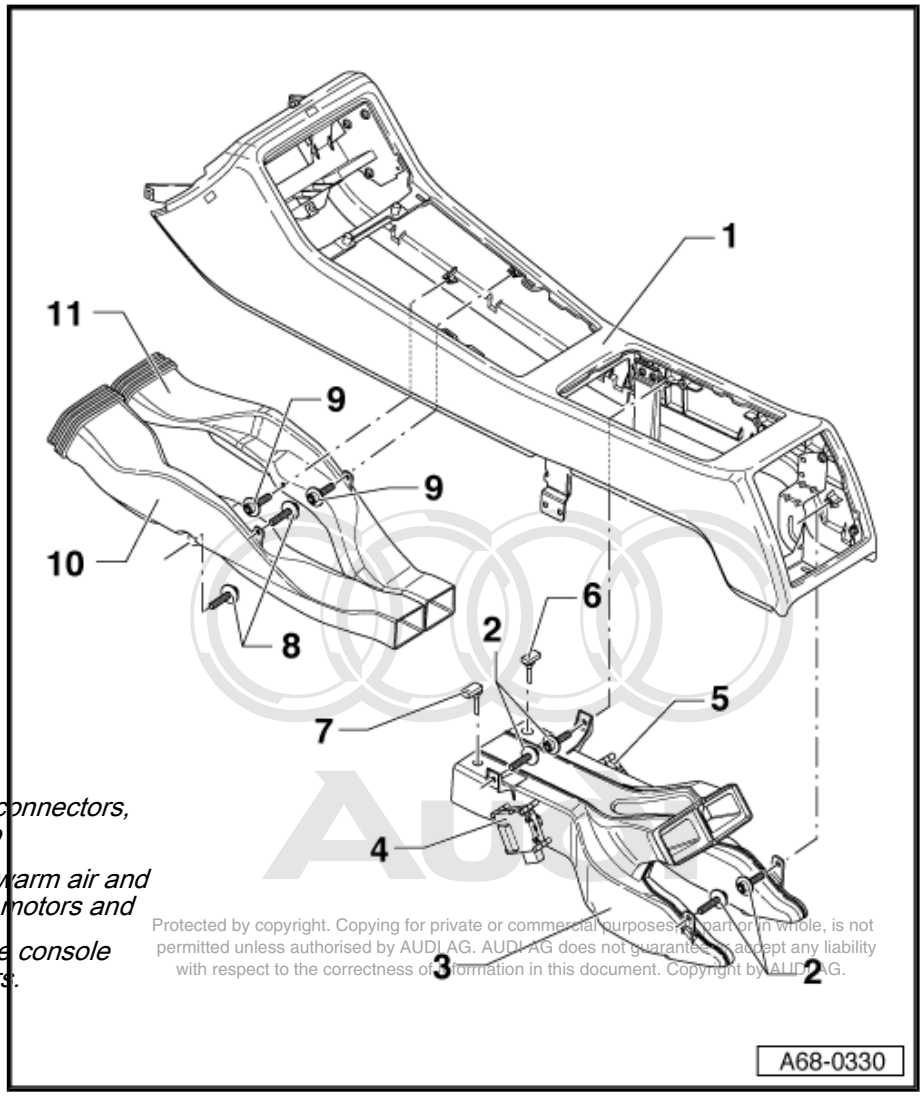

Protected by copyright. Copying for private or commercial purposes, in part or in whole, is not permitted unless authorised by AUDI AG. AUDI AG does not guarantee or accept any liability with respect to the correctness of information in this document. Copyright by AUDI AG.

♦ Removing

Note

- ♦ *Before unplugging connectors, mark assignment to*
- ♦ *Rear left/right vent warm air and cold air flap control motors and*
- ♦ *Rear left/right centre console temperature sensors.*

– Remove centre console ⇒ page 19 .
– Remove bolts -8- and -9- (4x).
– Pull rear left -10- and rear right -11- air ducts out of centre console air distributor -3-.

Vehicles with 2-zone climate control

– Unplug electrical connectors at rear left vent warm air and cold air flap control motor (-V220-).

Vehicles with 4-zone climate control

- Unplug electrical connectors at rear left (-V220-) -4- and rear right (-V221-) -5- vent warm air and cold air flap control motors.
- Unplug electrical connectors at rear left (-G311-) -7- and rear right (-G312-) -6- centre console temperature sensors.

All vehicles (continued)

- Unscrew bolts -2- (4x).
- Take out centre console air distributor -3-.

♦ Installing

Install in reverse order of removal. Observe the following:

- Observe correct assignment when plugging in connectors at rear left (-V220-) -4- and rear right (-V221-) -5- vent warm air and cold air flap control motors.
- Observe correct assignment when plugging in connectors at rear left (-G311-) -7- and rear right (-G312-) -6- centre console temperature sensors.

4 - Rear left vent warm air and cold air flap control motor -V220-

❑ For 2 and 4-zone climate control

❑ Removing and installing ⇒ Rep. gr. 87

5 - Rear right vent warm air and cold air flap control motor -V221-

❑ For 4-zone climate control

❑ Removing and installing ⇒ Rep. gr. 87

6 - Rear right centre console temperature sensor -G312-

❑ For 4-zone climate control

❑ Removing and installing ⇒ Rep. gr. 87

Protected by copyright. Copying for private or commercial purposes, in part or in whole, is not permitted unless authorised by AUDI AG. AUDI AG does not guarantee or accept any liability with respect to the correctness of information in this document. Copyright by AUDI AG.

7 - Rear left centre console temperature sensor -G311-

❑ For 4-zone climate control

❑ Removing and installing ⇒ Rep. gr. 87

8 - Bolts (2x), 2 Nm

9 - Bolts (2x), 2 Nm

10 - Rear air duct (left-side)

♦ Removing

- Remove centre console ⇒ page 19 .
- Unscrew bolts -8- (2x).
- Pull rear left air duct out of centre console air distributor -3-.

♦ Installing

Install in reverse order of removal.

11 - Rear air duct (right-side)

♦ Removing

- Remove centre console ⇒ page 19 .
- Unscrew bolts -9- (2x).
- Pull rear right air duct out of centre console air distributor -3-.

♦ Installing

Install in reverse order of removal.

2.23 Removing and installing rear vent warm air and cold air flap control motor (left-side/right-side)

♦ Removing and installing rear left vent warm air and cold air flap control motor -V220- ⇒ Rep. gr. 87

- Removing and installing rear right vent warm air and cold air flap control motor -V221- ⇒ Rep. gr. 87

2.24 Removing and installing rear centre console temperature sensor (left-side/ right-side)

- Removing and installing rear left centre console temperature sensor -G311- ⇒ Rep. gr. 87
- Removing and installing rear right centre console temperature sensor -G312- ⇒ Rep. gr. 87

2.25 Removing and installing centre console bracket, centre armrest bracket and bracket for air conditioner operating unit/ ashtray (front)

Special tools and workshop equipment required

- Torque wrench -V.A.G 1783/-

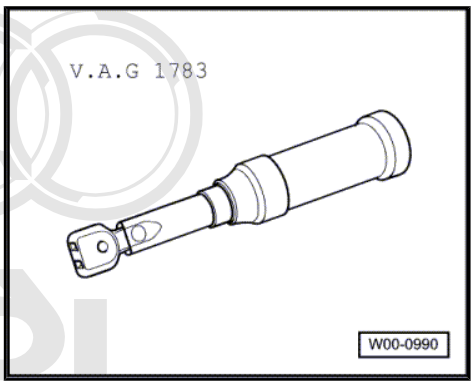

Protected by copyright. Copying for private or commercial purposes, in part or in whole, is not permitted unless authorised by AUDI AG. AUDI AG does not guarantee or accept any liability with respect to the correctness of information in this document. Copyright by AUDI AG.

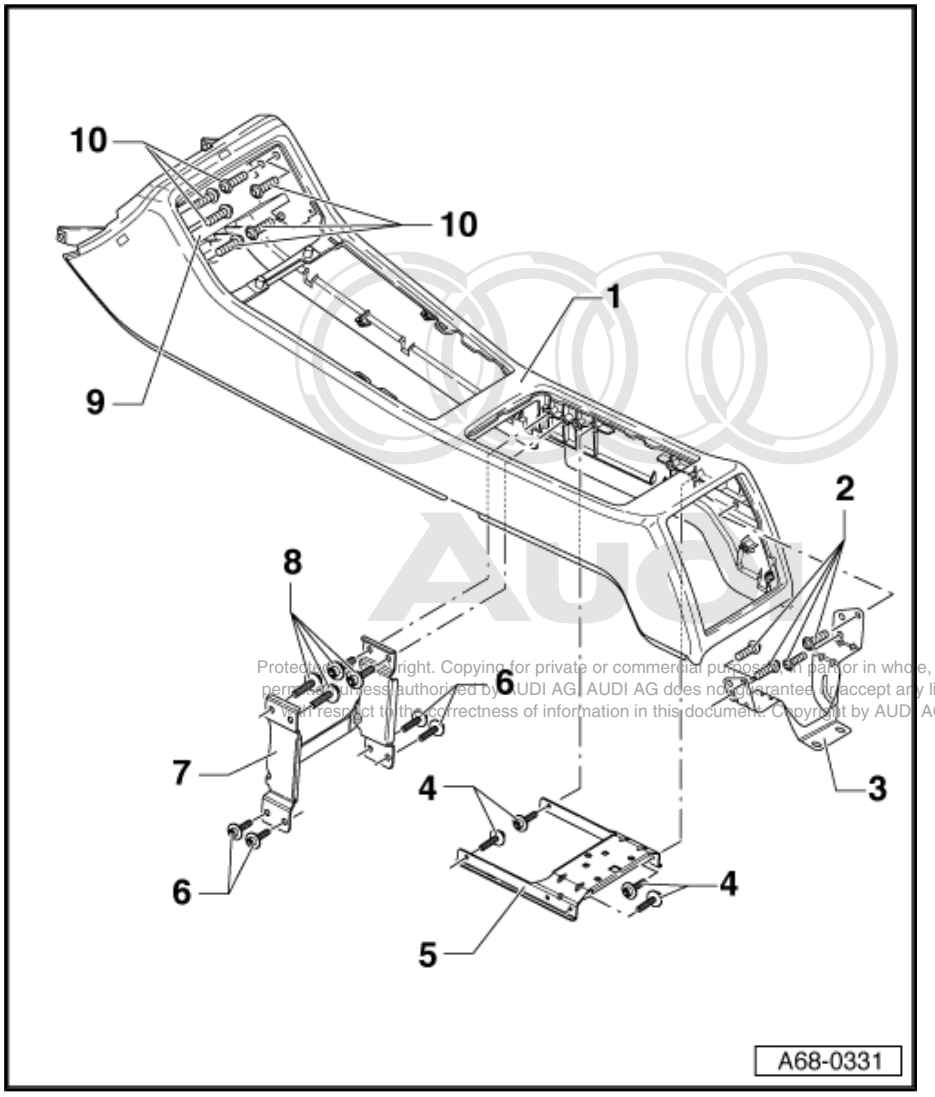

Protected by copyright. Copying for private or commercial purposes, in part or in whole, is not permitted unless authorized by AUDI AG. AUDI AG does not guarantee or accept any liability with respect to the correctness of information in this document. Copyright by AUDI AG.

1 - Centre console

2 - Bolts (4x), 4 Nm

3 - Bracket for rear centre console

- Removing
  - Remove centre console ⇒ page 19 .
  - Remove rear air ducts ⇒ page 45 .
  - Remove centre console air distributor ⇒ page 45 .
  - Unscrew bolts -2- (4x).
  - Take out bracket for rear centre console -3-.
- Installing

Install in reverse order of removal.

4 - Bolts (4x), 4 Nm

5 - Bracket for centre armrest

- Removing
  - Remove centre armrest ⇒ page 75 .
  - Remove centre console ⇒ page 19 .
  - Remove rear air ducts ⇒ page 45 .
  - Remove centre console air distributor ⇒ page 45 .
  - Unscrew bolts -4- (4x).
  - Take out bracket for centre armrest -5-.
- Installing

Install in reverse order of removal.

6 - Bolts (4x), 4 Nm

7 - Bracket for centre console (centre)

- Removing
  - Remove centre console ⇒ page 19 .
  - Unscrew bolts -6- (4x).
  - Take out bracket (centre) for centre console -7-.
- Installing

Install in reverse order of removal.

8 - Bolts (4x), 4 Nm

9 - Bracket for air conditioner operating unit/ashtray (front)

- Removing
  - Remove centre console ⇒ page 19 .
  - Remove rear air ducts ⇒ page 45 .
  - Unscrew bolts -10- (6x).
  - Take out bracket for air conditioner operating unit/ashtray (front) -9-.
- Installing

Install in reverse order of removal.

10 - Bolts (6x), 4 Nm

3 Removing and installing centre console with extension

3.1 Centre console with extension - overview of fitting locations

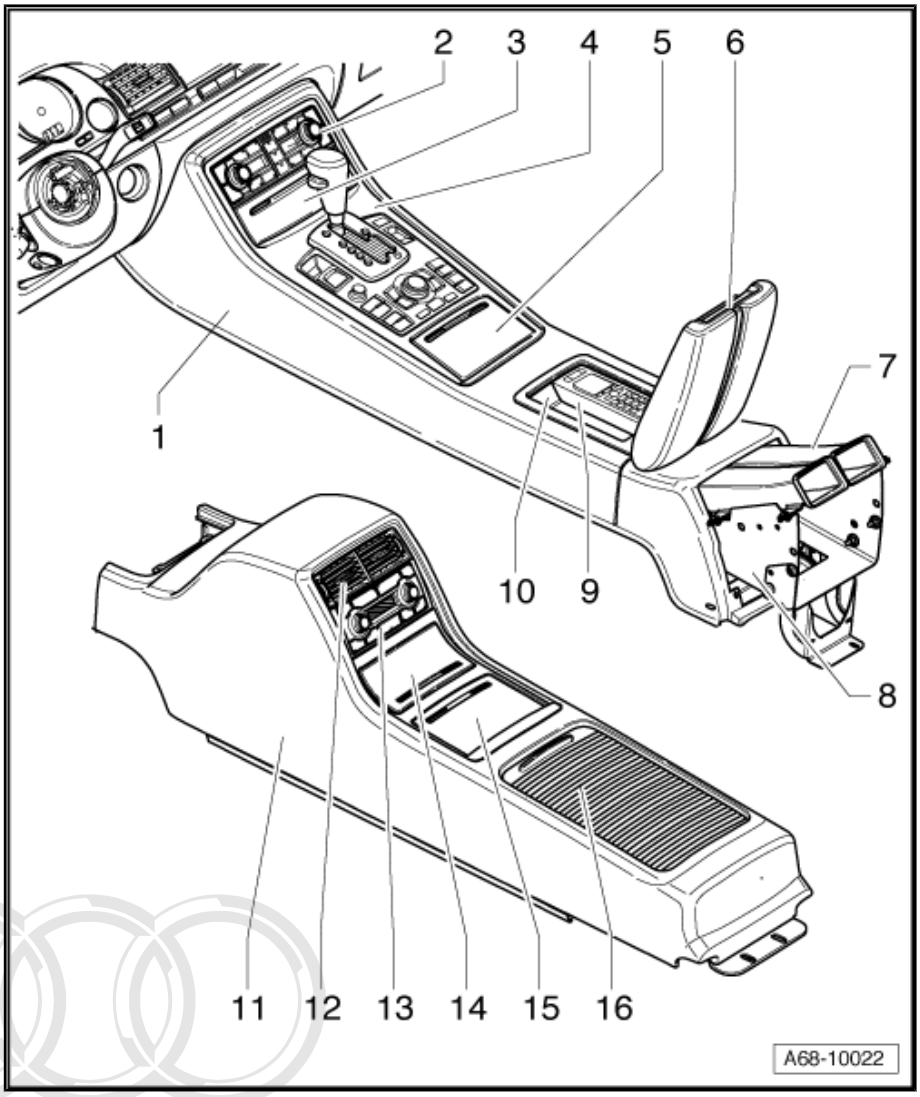

1 - Centre console with extension

- ❑ Removing and installing ⇒ page 51

2 - Air conditioner operating unit (front)

- ❑ Removing and installing ⇒ page 29

3 - Ashtray (front)

- ❑ Removing and installing ⇒ page 31

4 - Trim for centre console with multimedia operating unit

- ❑ Removing and installing ⇒ page 33

5 - Front centre console cup holder

- ❑ Removing and installing ⇒ page 34

6 - Centre armrest

- ❑ One-piece, removing and installing ⇒ page 75
- ❑ One-piece, dismantling and assembling ⇒ page 77
- ❑ Split, removing and installing ⇒ page 84
- ❑ Split, dismantling and assembling ⇒ page 86

7 - Intermediate piece for air ducts

- ❑ Removing and installing ⇒ page 70

8 - Bracket for centre console extension

- ❑ Removing and installing ⇒ Item 4 (page 66)

9 - Handset cradle

- ❑ Removing and installing ⇒ Rep. gr. 91

Protected by copyright. Copying for private or commercial purposes, in part or in whole, is not permitted unless authorised by AUDI AG. AUDI AG does not guarantee or accept any liability with respect to the correctness of information in this document. Copyright by AUDI AG.

10 - Storage compartment

- ❑ Removing and installing ⇒ page 72

11 - Extension for centre console

- ❑ Removing and installing ⇒ page 59

12 - Rear vent

- ❑ Removing and installing ⇒ page 71

13 - Air conditioner operating unit (rear)

- ❑ Removing and installing ⇒ page 71

14 - Storage compartment (small)

- ❑ Removing and installing ⇒ page 61
- ❑ Removing and installing small storage compartment lid ⇒ page 62

15 - Cup holder (rear)

- ❑ Removing and installing ⇒ page 61
- ❑ Removing and installing cup holder lid ⇒ page 62

16 - Storage compartment (large)

- ❑ Removing and installing ⇒ page 63
- ❑ Removing and installing sliding cover for large storage compartment ⇒ page 64

3.2 Exploded view of centre console with extension

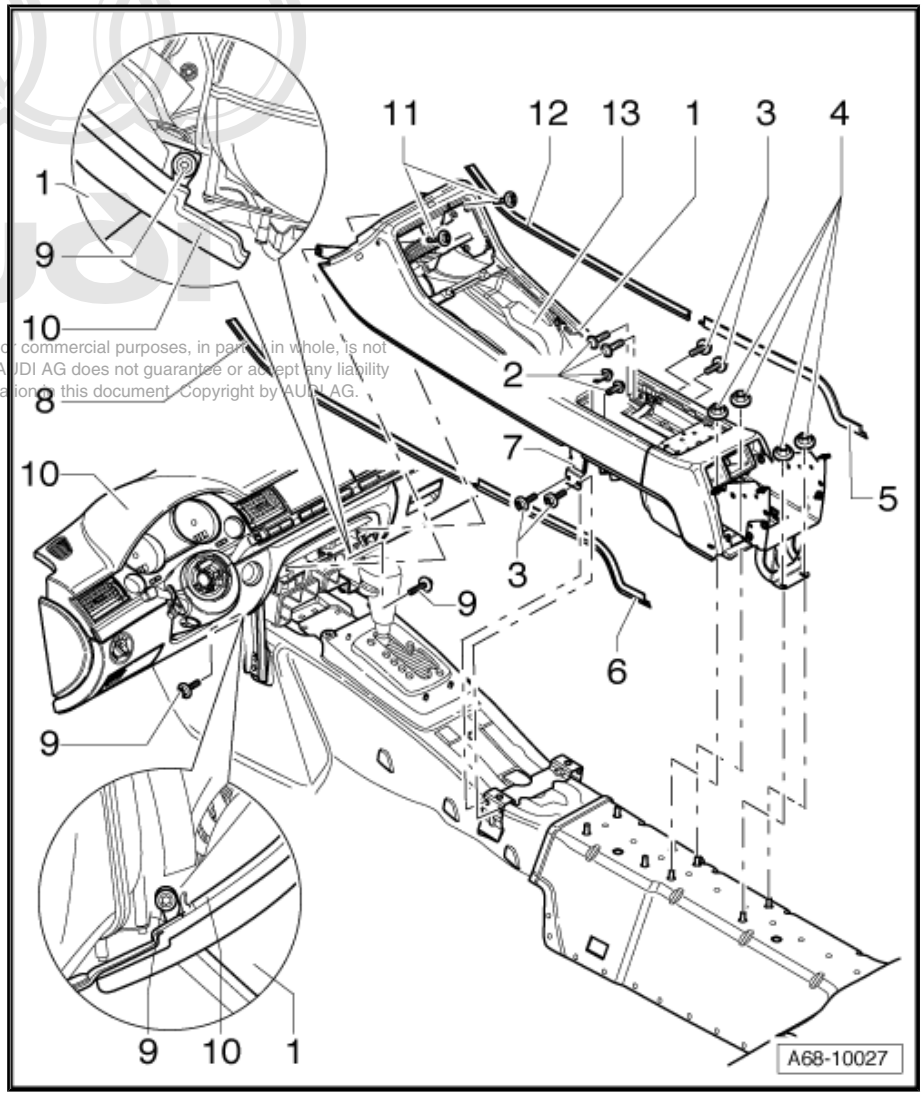

1 - Centre console with extension

- ❑ Removing and installing ⇒ page 51

2 - Bolts (4x), 4 Nm

3 - Bolts (4x), 4 Nm

4 - Nuts (4x), 4 Nm

5 - Rear floor covering rod (right-side)

- ❑ Removing and installing ⇒ page 29

Protected by copyright. Copying for private or commercial purposes, in part or in whole, is not permitted unless authorised by AUDI AG. AUDI AG does not guarantee or accept any liability with respect to the correctness of information in this document. Copyright by AUDI AG.

6 - Rear floor covering rod (left-side)

- ❑ Removing and installing ⇒ page 29

7 - Bracket for centre console (centre)

- ❑ Removing and installing ⇒ Item 1 (page 66)

8 - Front floor covering rod (left-side)

- ❑ Removing and installing ⇒ page 29

9 - Bolts (2x), 4 Nm

10 - Dash panel

11 - Bolts (2x), 4 Nm

12 - Front floor covering rod (right-side)

- ❑ Removing and installing ⇒ page 29

13 - Air duct (rear)

- ❑ Left-side: removing and installing ⇒ Item 10 (page 70)
- ❑ Right-side: removing and installing ⇒ Item 11 (page 70)

3.3 Removing and installing centre console with extension

Special tools and workshop equipment required

- Removal wedge -3409-
- Protective cap - VAS 6223/9-
- Radio release tool - T10057-

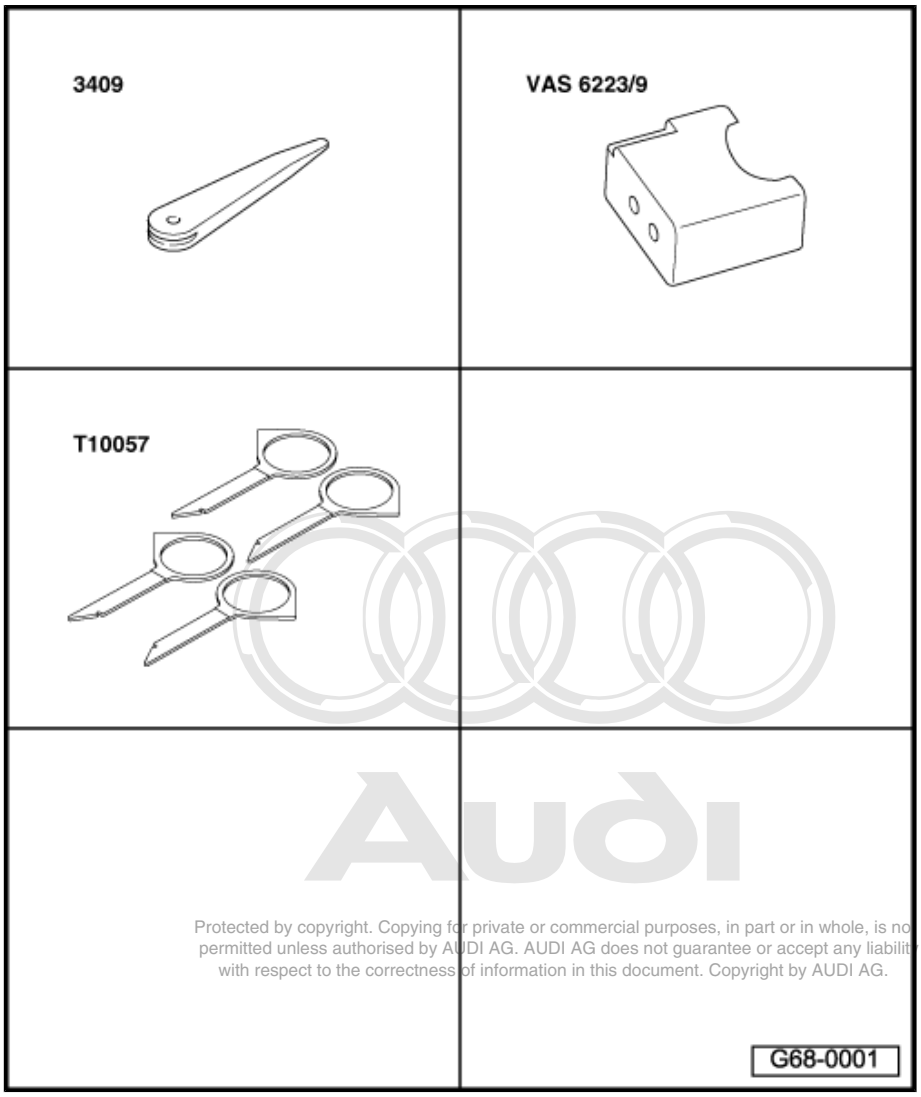

Protected by copyright. Copying for private or commercial purposes, in part or in whole, is not permitted unless authorised by AUDI AG. AUDI AG does not guarantee or accept any liability with respect to the correctness of information in this document. Copyright by AUDI AG.

Removing

Note

All cable ties unfastened or cut open on removal are to be re-attached at the same location on installation.

– Remove extension for centre console ⇒ page 59 .

– Unscrew nuts at rear ⇒ Item 4 (page 50) .

– Move front seats to rearmost position and set backrests to 45° position.

WARNING

Observe safety regulations for pyrotechnic components *⇒ page 94* *.*

– With ignition switched on, disconnect battery earth wire ⇒ Electrical system; Rep. gr. 27 .

– Remove airbag unit and steering wheel ⇒ page 123 .

– Use screwdriver to prise off dash panel end trim (left-side) -arrow-.

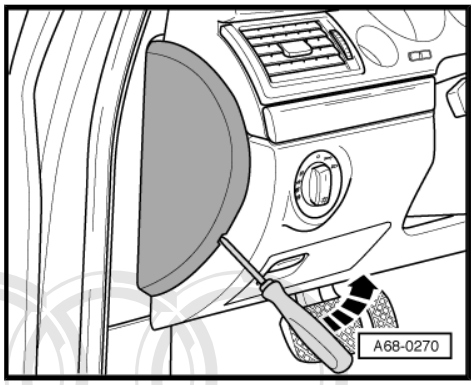

– Carefully separate trim panel -1- from dash panel using removal wedge -3409- -arrows-.

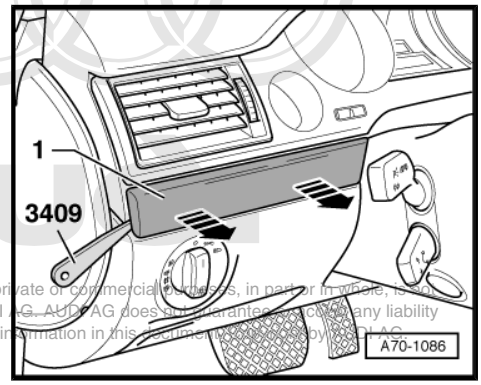

Protected by copyright. Copying for private or commercial purposes, in part or in whole, is not permitted unless authorised by AUDI AG. AUDI AG does not guarantee or accept any liability with respect to the correctness of information in this document. Copyright by AUDI AG.

– Open coin holder.

– Slide trim for coin holder to left out of fastener -arrow- and detach.

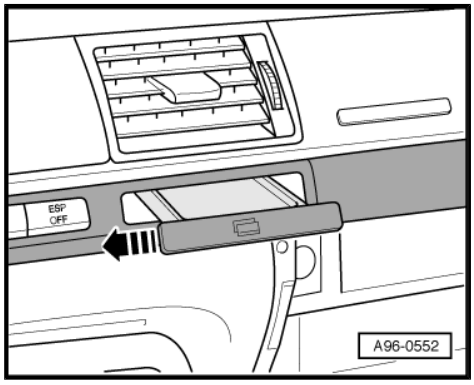

– Open glove box.

– Starting from above glove box, carefully separate trim panel -1- with switch module from dash panel using removal wedge -3409- .

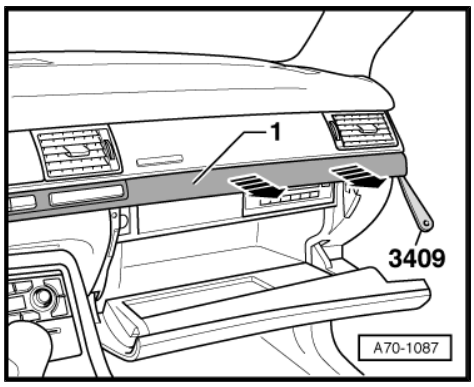

Note

Take particular care when unfastening clip at end of trim panel closest to driver.

– Unplug electrical connector.

– Unscrew driver's storage compartment -arrows-.
– Unplug electrical connectors.

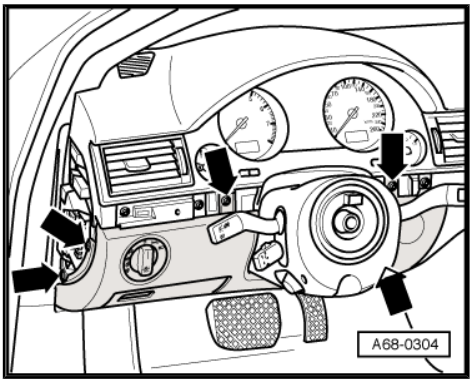

– On vehicles with knee airbag: Pull catch -2- in direction of arrow and unplug electrical connectors -1- and -3-.

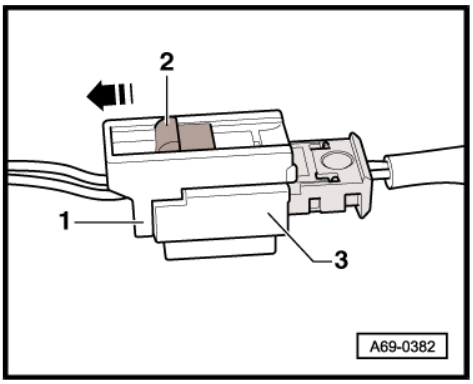

– Use screwdriver to prise off dash panel end trim (right-side) -arrow-.

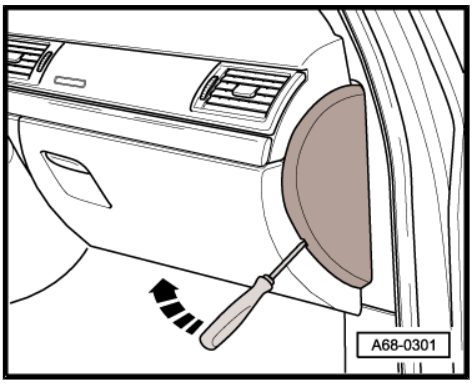

– If fitted, remove CD changer as follows:
– Insert two keys of radio release tool -T10057- into front of CD changer.
♦ Top L - top left
♦ Top R - top right
– Pull CD changer out of mounting frame.
– Unplug electrical connector.
– Unplug connector for optical fibre.

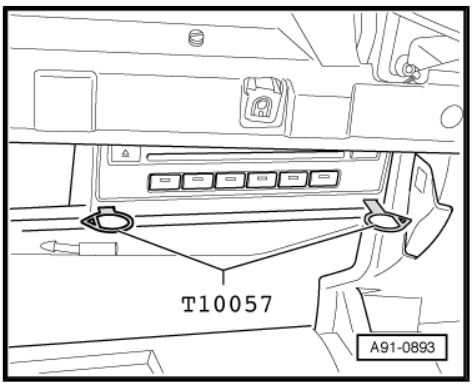

Protected by copyright. Copying for private or commercial purposes, in part or in whole, is not permitted unless authorised by AUDI AG. AUDI AG does not guarantee or accept any liability with respect to the correctness of information in this document. Copyright by AUDI AG.

– Cover open wiring harness connector -2- of optical fibre cable with protective cap -VAS 6223/9- -Item 1-.

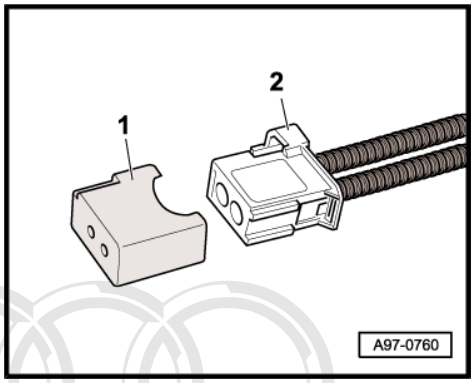

Note

The protective cap is designed to prevent the end face of the optical fibre from becoming soiled or damaged, as this would impair light transmission.

– Press catches on CD changer and pull release keys out of CD changer.

– If fitted, remove storage compartment from glove box. To do so, use small screwdriver to release retaining tabs -1- and -2- in -direction of arrow-.

– Pull storage compartment out of glove box.

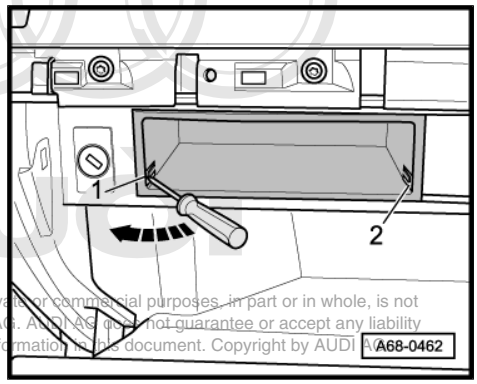

Protected by copyright. Copying for private or commercial purposes, in part or in whole, is not permitted unless authorised by AUDI AG. AUDI AG does not guarantee or accept any liability with respect to the correctness of information in this document. Copyright by AUDI AG.

– Remove bolts -arrows-.

– Remove bolts -1- and -2-.

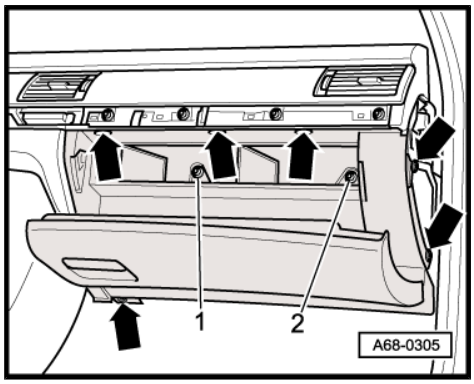

– Unplug electrical connector -1- for glove box wiring harness -2- from supply lead -3-.

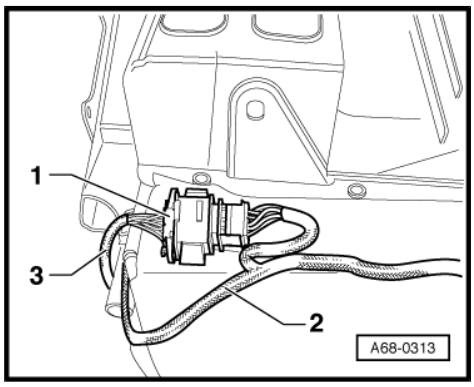

– On vehicles with knee airbag: Pull catch -2- in direction of arrow and unplug electrical connectors -1- and -3-.
– Remove glove box.

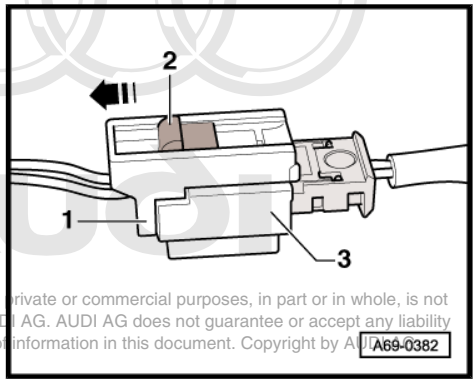

Protected by copyright. Copying for private or commercial purposes, in part or in whole, is not permitted unless authorised by AUDI AG. AUDI AG does not guarantee or accept any liability with respect to the correctness of information in this document. Copyright by AUDI AG.

Vehicles with split centre armrest:

– Fold centre armrests upwards.
– Lift off trim for armrest hinge -arrow-.

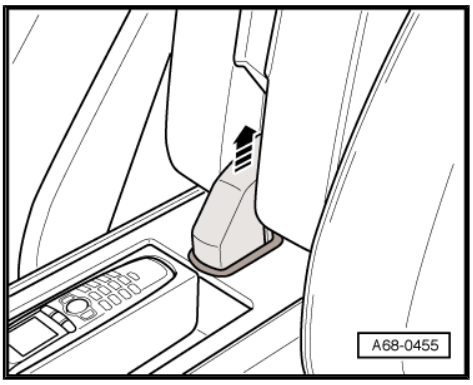

– Remove bolts -arrows-.
– Unplug connectors for storage compartment illumination (accessible through opening for rear ventilation).
– Lift off centre armrests.

Vehicles with one-piece centre armrest:

– Fold centre armrest upwards.

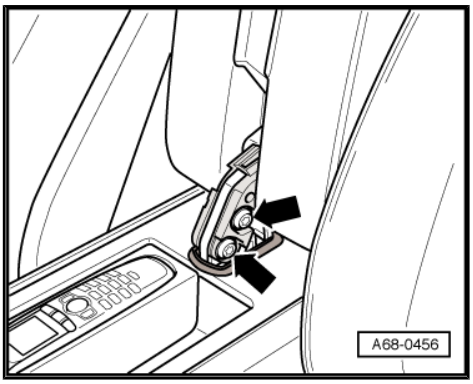

All vehicles:

– Use removal wedge -3409- to prise front corners of storage compartment out of centre console -arrow 1- and pull storage compartment forwards -arrow 2-.

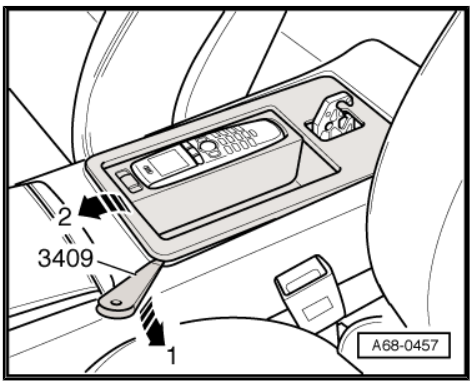

– Unplug electrical connectors -1- and -2- and detach storage compartment.

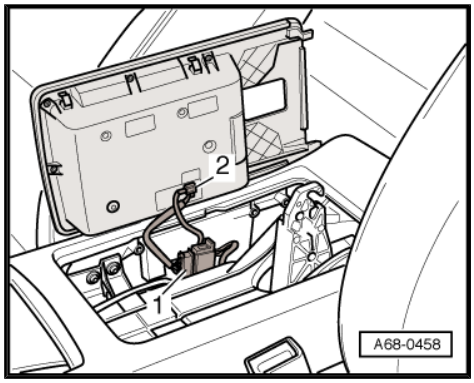

– Unplug electrical connectors -1-.
– Remove bolts -arrows- on both sides of centre console.

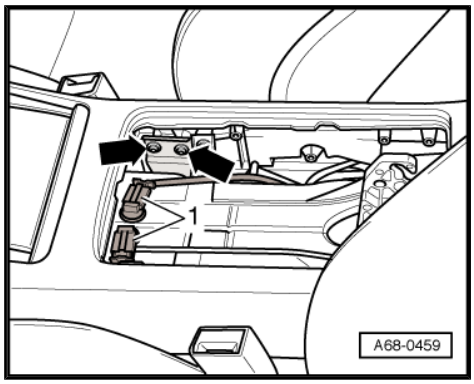

– Press button -arrow- and take out insert -1- for ashtray (front).

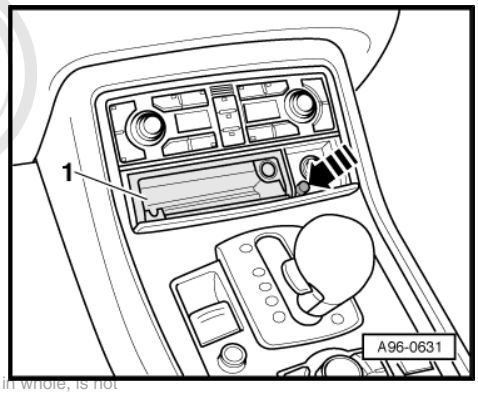

Protected by copyright. Copying for private or commercial purposes, in part or in whole, is not permitted unless authorised by AUDI AG. AUDI AG does not guarantee or accept any liability with respect to the correctness of information in this document. Copyright by AUDI AG.

– Unscrew bolt -arrow- and remove housing for front ashtray.
– Unplug electrical connector.

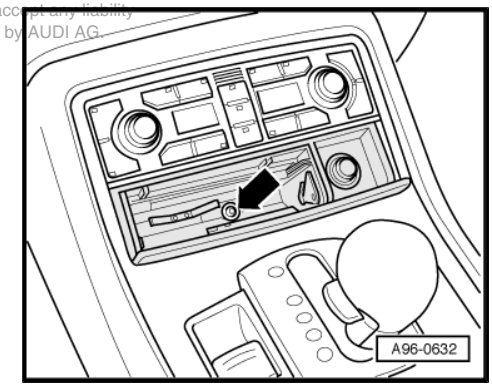

– Lift off centre console switch trim -arrows-.
– Unplug electrical connectors.

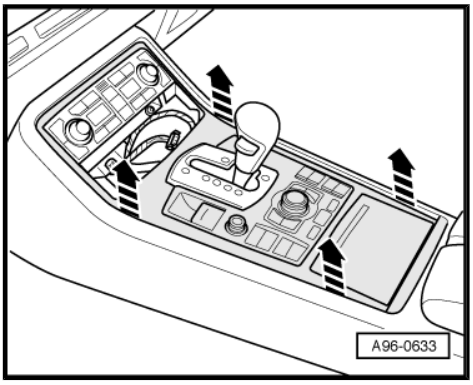

– Unscrew bolts -2-.
– Release retaining springs -1- with small screwdriver -arrow-.
– Swivel top edge of Climatronic control unit -J255- to rear.
– Take Climatronic control unit out of mounting.

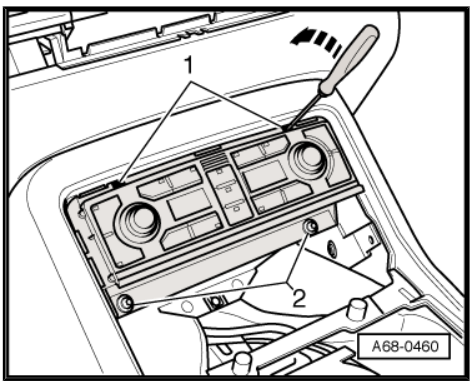

– Unplug electrical connectors -A ... E- by releasing retaining tab -G-.
– Unplug electrical connector -F-.

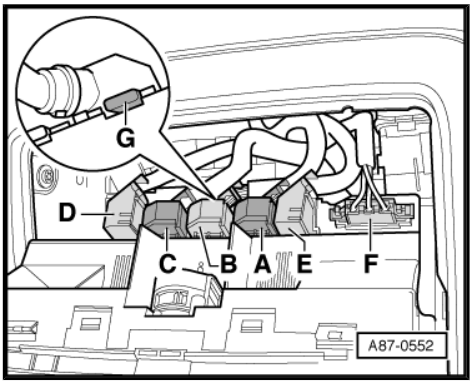

– Remove bolts -arrows-.

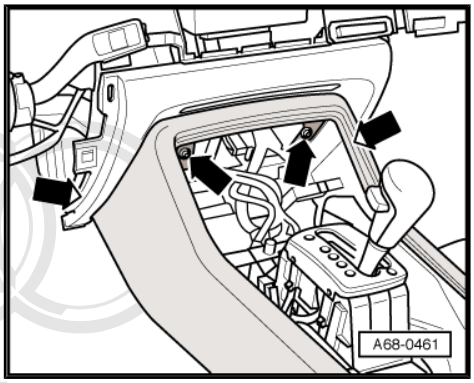

Protected by copyright. Copying for private or commercial purposes, in part or in whole, is not permitted unless authorised by AUDI AG. AUDI AG does not guarantee or accept any liability with respect to the correctness of information in this document. Copyright by AUDI AG.

– Use screwdriver, for example, to press on rocker -A- of selector lever manual release mechanism.
– At the same time, move selector lever from „P“ to „D“.

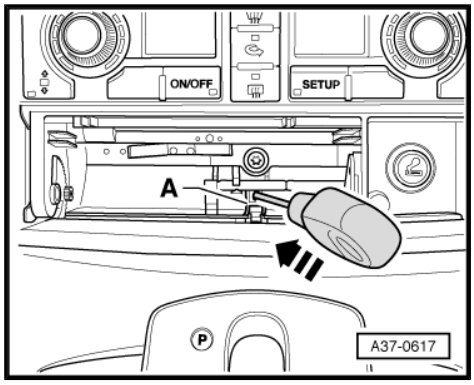

– Turn collar -1- to left and push it down as far as it will go.
– Lift off knob -2- for selector lever.

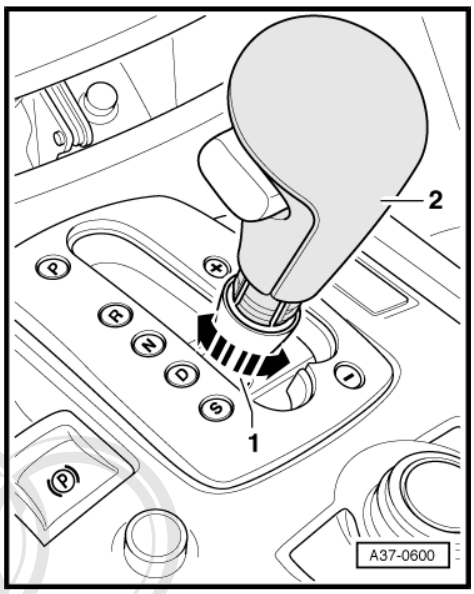

– Release fasteners -1- on either side of shift mechanism -arrow- and lift up trim panel -3-.
– Unplug electrical connector -2- and detach trim panel.
– Raise centre console at rear and unplug connectors on underside of centre console.
– Detach centre console towards rear.

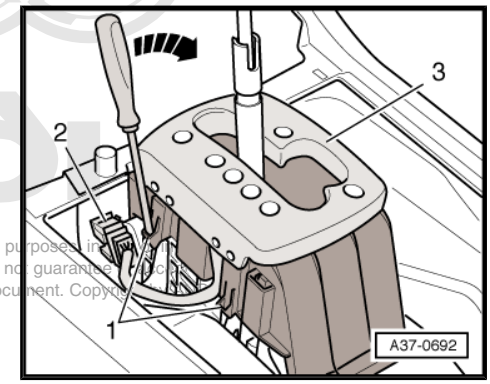

Installing

Installation is carried out in reverse order; note the following:

Protected by copyright. Copying for private or commercial purposes, in part or in whole, is not permitted unless authorised by AUDI AG. AUDI AG does not guarantee or accept any liability with respect to the correctness of information in this document. Copyright by AUDI AG.

– When fitting trim panel -1- with switch panel make sure both catches are inserted in centre of trim panel between dash panel and monitor housing -arrows-.

– With ignition switched on, connect battery earth wire ⇒ Electrical system; Rep. gr. 27 .

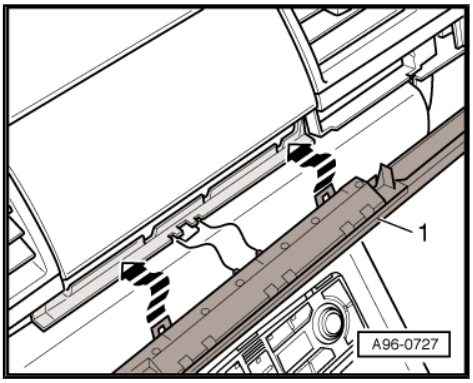

Tightening torques

Component		Nm
Centre console to:	Body	4
	Dash panel	4
Split armrest to support		18
Air vents to rear centre console		2.5
Storage compartment (driver side)	Central tube	4
to:	Dash panel	4
Glove box to:	Central tube	4
	Dash panel	4

Protected by copyright. Copying for private or commercial purposes, in part or in whole, is not permitted unless authorised by AUDI AG. AUDI AG does not guarantee or accept any liability with respect to the correctness of information in this document. Copyright by AUDI AG.

3.4 Removing and installing extension for centre console

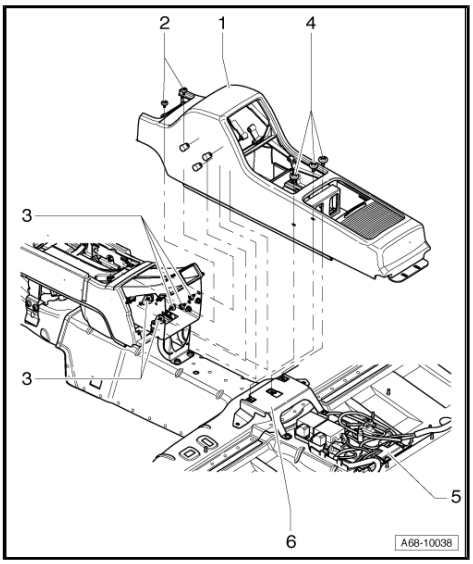

Special tools and workshop equipment required

♦ Torque wrench -V.A.G 1410-

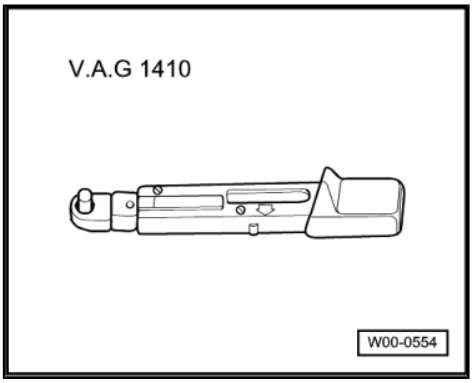

1 - Extension for centre console

Removing

- Remove centre armrest (one-piece ⇒ page 75 , split ⇒ page 84).
- Remove storage compartment ⇒ page 72 .
- Remove cup holder unit with small storage compartment lid ⇒ page 61 .
- Move both seats to foremost position and backrests to upright position.
- Remove rear vent and rear Climatronic operating and display unit ⇒ page 71 .
- Remove bolts -2- (2x).
- Unscrew bolts -3- (6x).
- Remove bolts -4- (3x).
- Unplug connectors to sockets -2- and to large storage compartment light.
- Lift out extension for centre console -2- to front.

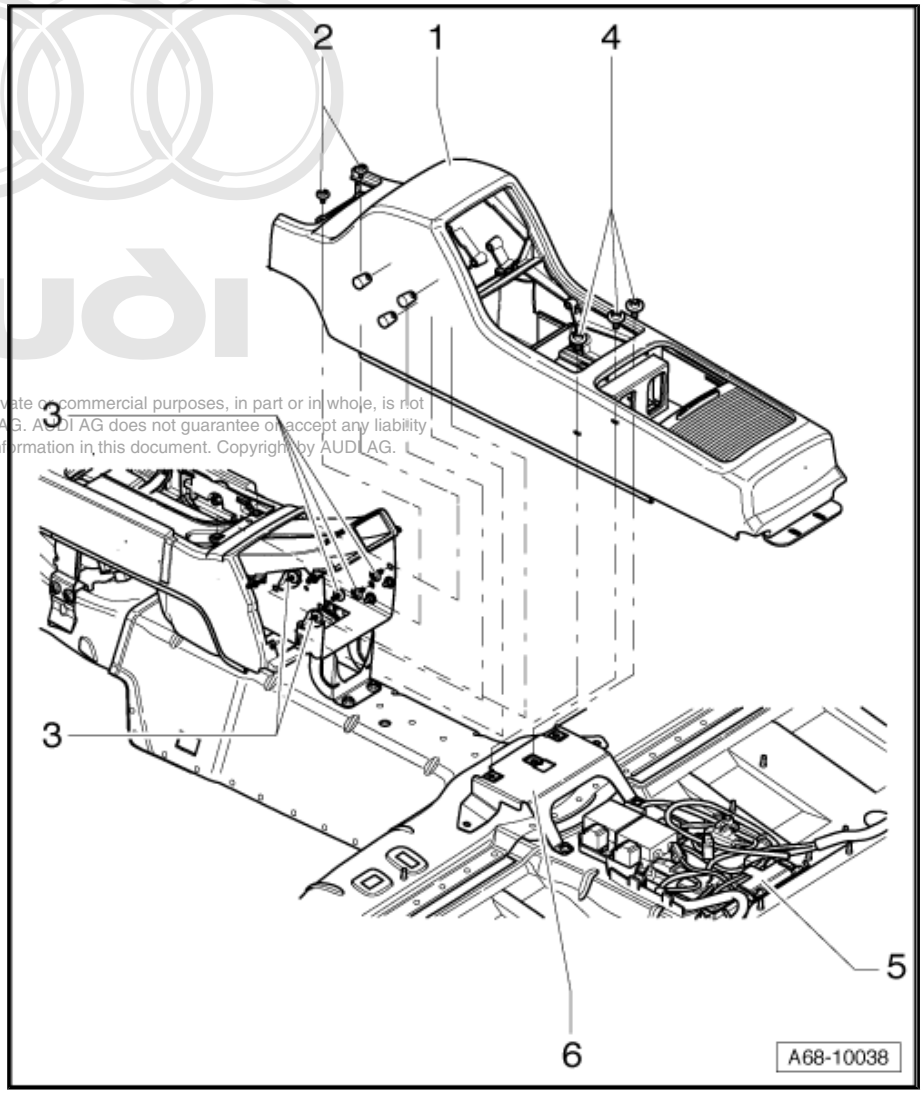

Personal data protection right. Copying for private or commercial purposes, in part or in whole, is not permitted unless authorised by AUDI AG. AUDI AG does not guarantee or accept any liability with respect to the correctness of information in this document. Copyright by AUDI AG.

Installing

Install in reverse order of removal.

2 - Bolts (2x), 4 Nm

3 - Bolts (6x), 4 Nm

4 - Bolts (3x), 4 Nm

5 - Rear brackets

- ❑ Removing and installing ⇒ page 68

6 - Front brackets

- ❑ Removing and installing ⇒ page 67

3.5 Removing and installing cup holder unit with small storage compartment lid

– Open lid of small storage compartment -4-.
– Unclip cover panels -3- (2x).

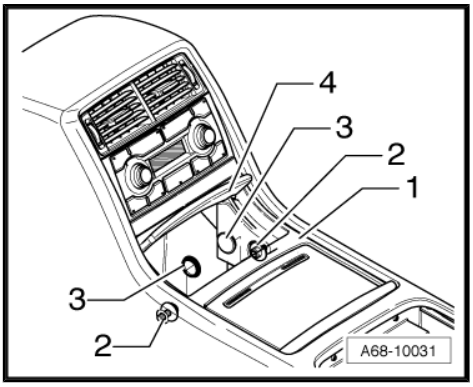

– Remove bolts -2-.
– Close lid of small storage compartment -4-.
– Pull cup holder unit -1- with retaining tabs -2- upwards out of mountings -3-.
– Unplug connector to cup holder unit -1-.

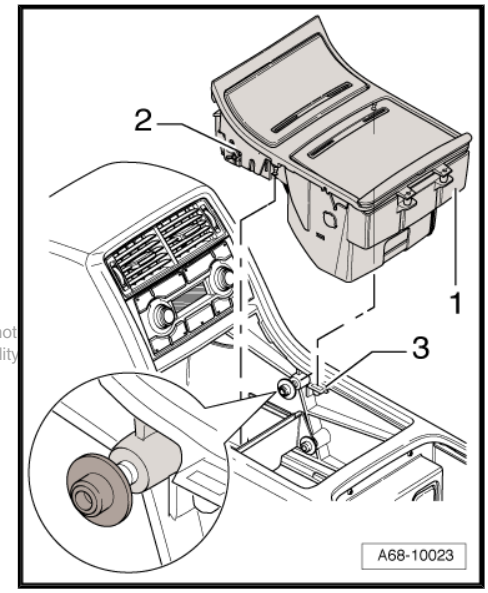

Protected by copyright. Copying for private or commercial purposes, in part or in whole, is not permitted unless authorised by AUDI AG. AUDI AG does not guarantee or accept any liability with respect to the correctness of information in this document. Copyright by AUDI AG.

3.6 Removing and installing small storage compartment

Special tools and workshop equipment required

♦ Torque wrench -V.A.G 1410-

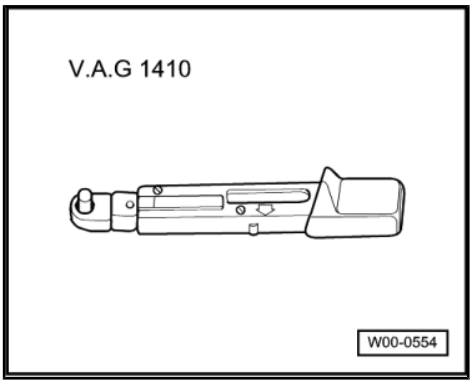

– Remove extension for centre console ⇒ page 59 .
– Unscrew bolts -3- (6x). 2.5 Nm
– Take out small storage compartment -2- downwards.

1 - Extension for centre console

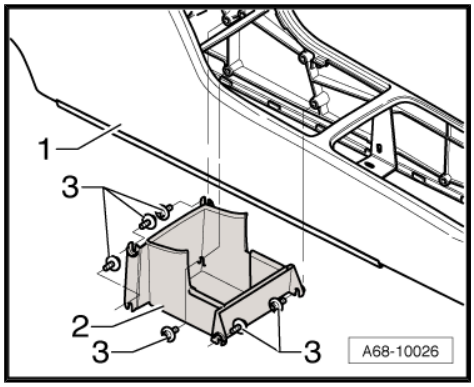

3.7 Removing and installing lid for cup holder and small storage compartment

Special tools and workshop equipment required

♦ Torque wrench -V.A.G 1410-

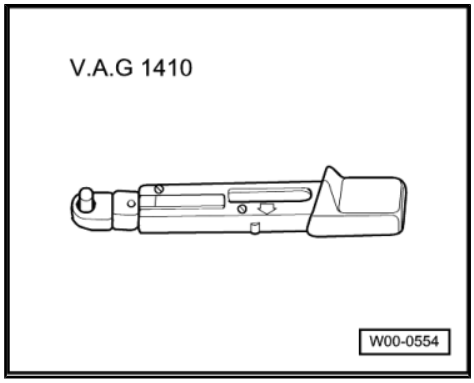

Lid for cup holder

– Remove cup holder unit with small storage compartment lid -3- ⇒ page 61 .
– Carefully unclip trim for cup holder -2- from rear.
– When installing: Clip trim for cup holder -2- into mountings -3-.

Lid for small storage compartment

– Remove cup holder unit with small storage compartment lid -3- ⇒ page 61 .
– Carefully unclip trim for small storage compartment -4- from rear.
– When installing: Clip trim for small storage compartment -4- into mountings -5-.

1 - Cup holder unit with small storage compartment lid

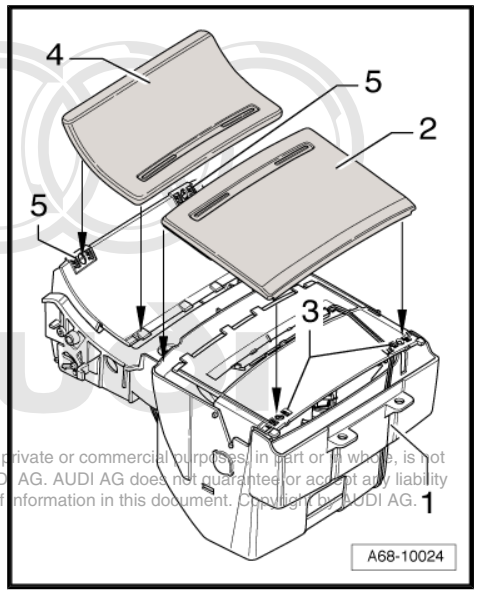

Protected by copyright. Copying for private or commercial purposes, in part or in whole, is not permitted unless authorised by AUDI AG. AUDI AG does not guarantee or accept any liability with respect to the correctness of information in this document. Copyright by AUDI AG.

3.8 Removing and installing frame for cup holder unit with small storage compartment lid

Special tools and workshop equipment required

♦ Torque wrench -V.A.G 1410-

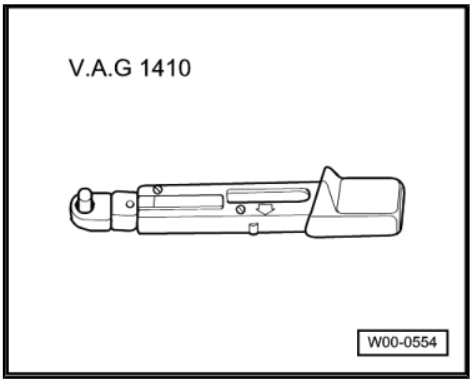

– Remove cup holder unit with small storage compartment lid -3- ⇒ page 61 .
– Remove bolts -2- (4x).
– Lift off frame -1-.

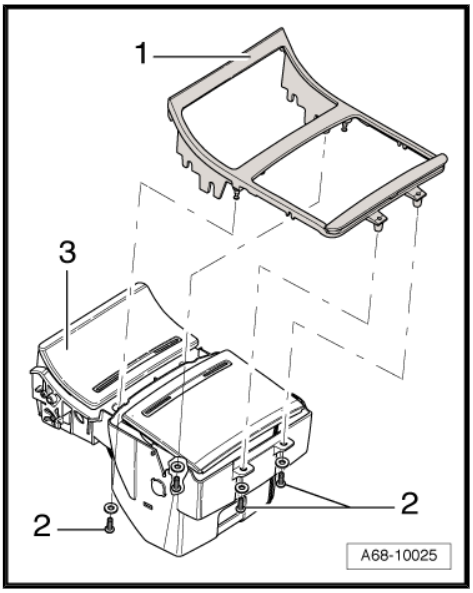

3.9 Removing and installing large storage compartment

Special tools and workshop equipment required

♦ Torque wrench -V.A.G 1410-

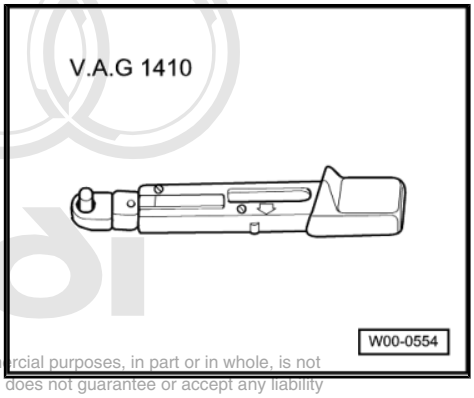

Protected by copyright. Copying for private or commercial purposes, in part or in whole, is not permitted unless authorised by AUDI AG. AUDI AG does not guarantee or accept any liability with respect to the correctness of information in this document. Copyright by AUDI AG.

– Remove extension for centre console ⇒ page 59 .
– Unscrew bolt -3-. 2.5 Nm
– Unscrew bolts -2- (6x). 2.5 Nm
– Take out large storage compartment -1- downwards.

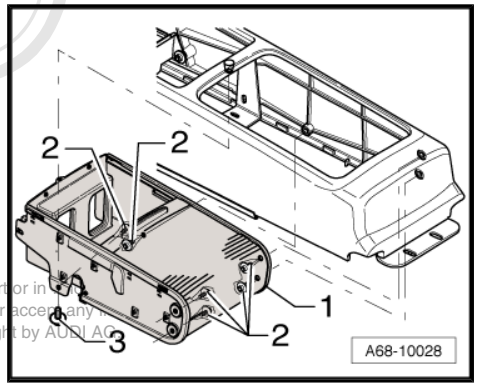

Protected by copyright. Copying for private or commercial purposes, in part or in whole, is not permitted unless authorised by AUDI AG. AUDI AG does not guarantee or accept any liability with respect to the correctness of information in this document. Copyright by AUDI AG.

3.10 Removing and installing sliding cover for large storage compartment

Special tools and workshop equipment required

♦ Torque wrench -V.A.G 1410-

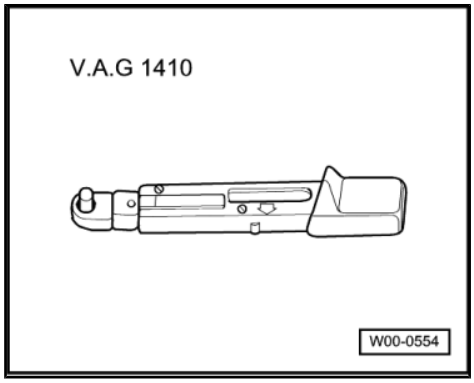

Removing

– Remove extension for centre console ⇒ page 59 .
– Remove large storage compartment ⇒ page 63 .
– Slacken off bolts -6- (2x) by a few turns.
– Release tabs -4- (2x) in direction of arrow.
– Pull out sliding cover -3- downwards.

Installing

– Insert sliding cover -3- from bottom.
– Pull sliding cover -3- forwards as far as it will go (completely close large storage compartment).
– Clip in tabs -4- at lugs -5-.
– Tighten bolts -6-.

1 - Storage compartment (large)

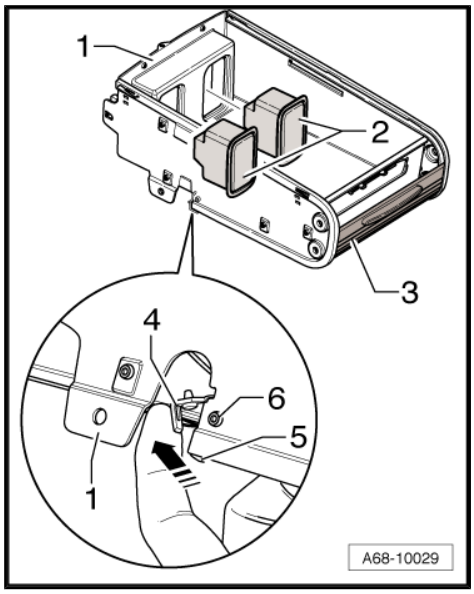

3.11 Removing and installing sockets in large storage compartment

Special tools and workshop equipment required

♦ Torque wrench -V.A.G 1410-

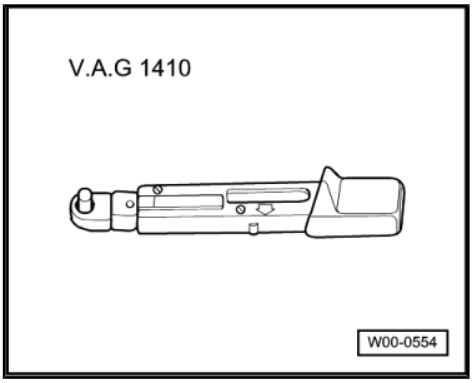

– Remove extension for centre console ⇒ page 59 .
– Press out large storage compartment -1- by carefully pressing retaining tabs of sockets -2- inwards using a flat screwdriver.
– Unplug connectors to sockets -2-.

Protected by copyright. Copying for private or commercial purposes, in part or in whole, is not permitted unless authorised by AUDI AG. AUDI AG does not guarantee or assume any liability with respect to the correctness of information in this document. Copyright by AUDI AG.

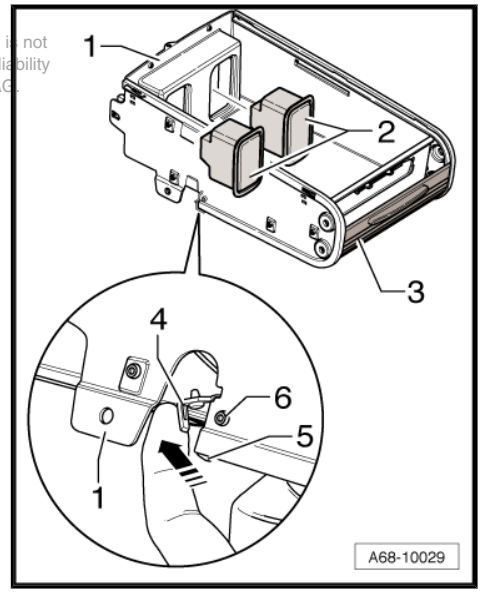

3.12 Removing and installing bracket for centre console extension

Special tools and workshop equipment required

♦ Torque wrench -V.A.G 1783/-

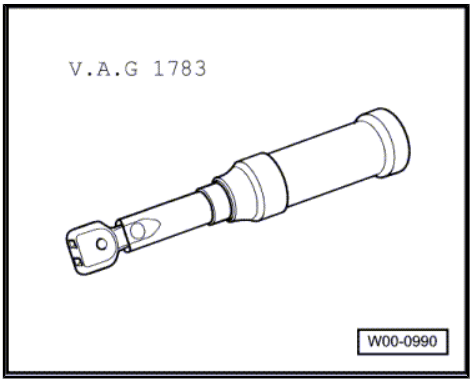

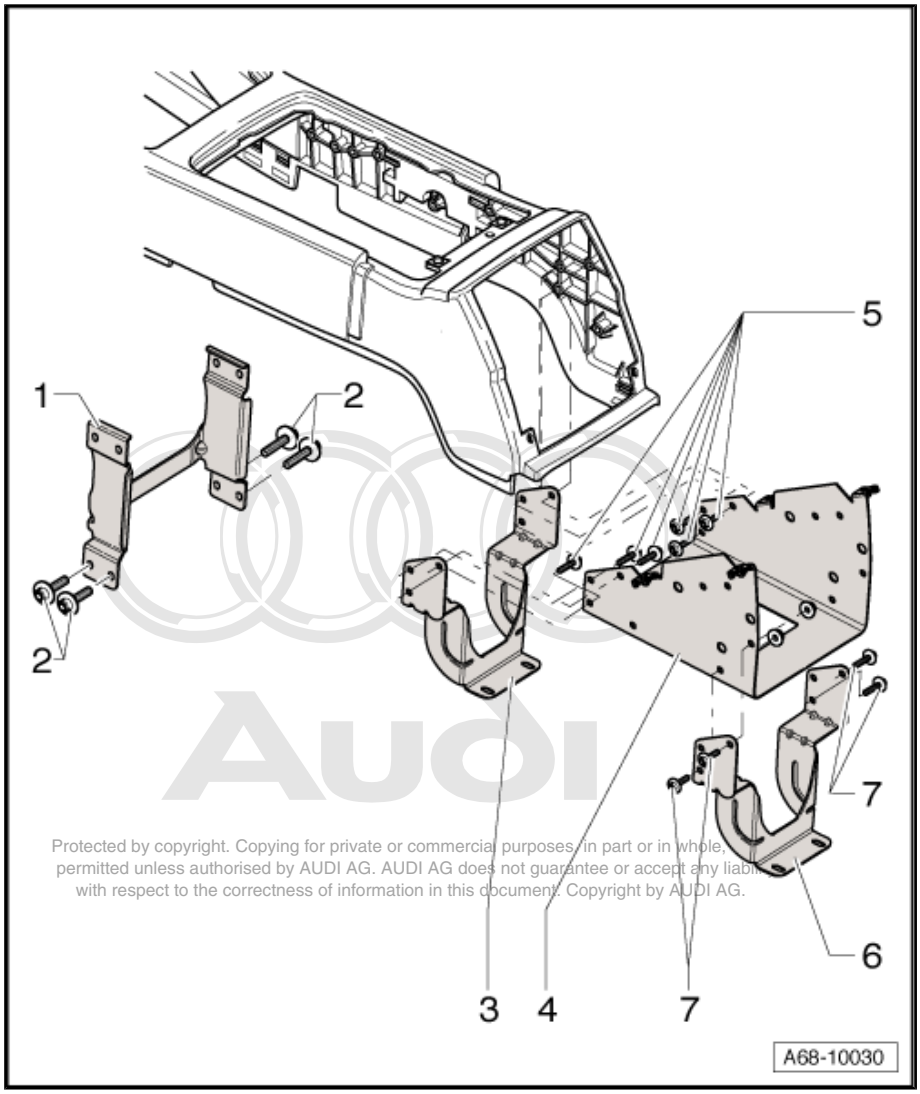

Protected by copyright. Copying for private or commercial purposes, in part or in whole, permitted unless authorised by AUDI AG. AUDI AG does not guarantee or accept any liability with respect to the correctness of information in this document. Copyright by AUDI AG.

1 - Bracket for centre console (centre)

Removing

- Remove extension for centre console ⇒ page 59 .
- Remove centre console ⇒ page 51 .
- Unscrew bolts -2- (4x).
- Detach bracket (centre) for centre console -1-.

Installing

Install in reverse order of removal.

2 - Bolts (4x), 4 Nm

3 - Bracket for centre console (rear)

Removing

- Remove extension for centre console ⇒ page 59 .
- Remove air duct intermediate piece ⇒ page 70 .
- Remove centre console ⇒ page 51 .
- Unscrew bolts -5- (6x).
- Pull out intermediate piece -4- towards rear.
- Pull out rear centre console bracket -3- downwards.

Installing

Install in reverse order of removal.

4 - Intermediate piece

Removing

- Remove extension for centre console ⇒ page 59 .
- Remove air duct intermediate piece ⇒ page 70 .
- Remove bolts -7- (4x).
- Unscrew bolts -5- (6x).
- Pull out intermediate piece -4- towards rear.

Installing

Install in reverse order of removal.

5 - Bolts (6x), 4 Nm

6 - Bracket for centre console extension

Removing

- Remove extension for centre console ⇒ page 59 .
- Remove air duct intermediate piece ⇒ page 70 .
- Remove bolts -7- (4x).
- Unscrew bolts -5- (6x).
- Pull out intermediate piece -4- towards rear.
- Unscrew nuts for bracket for centre console extension -6- ⇒ Item 4 (page 50) .
- Take out bracket for centre console extension -6-.

Protected by copyright. Copying for private or commercial purposes, in part or in whole, is not permitted unless authorised by AUDI AG. AUDI AG does not guarantee or assume any liability with respect to the correctness of information in this document. Copyright by AUDI AG.

Installing

Install in reverse order of removal.

7 - Bolts (4x), 4 Nm

3.13 Bracket for centre console extension (front)

Special tools and workshop equipment required

- Torque wrench -V.A.G 1410-

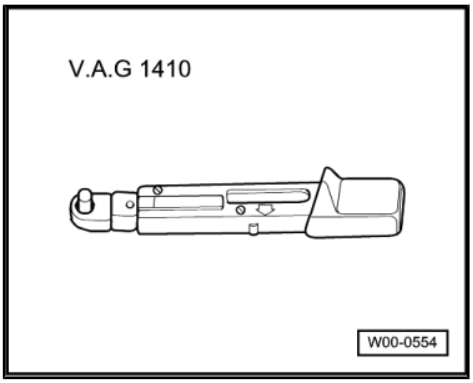

- Remove extension for centre console ⇒ page 59 .
- Unscrew bolts -3- (2x) for electrically operated single seats -4-. 40 Nm
- Remove nuts -2- (2x). 4 Nm
- Slightly lift electrically operated single seats -4-; if necessary slacken off more bolts at electrically operated single seats -4-.
- Take out bracket -1-.

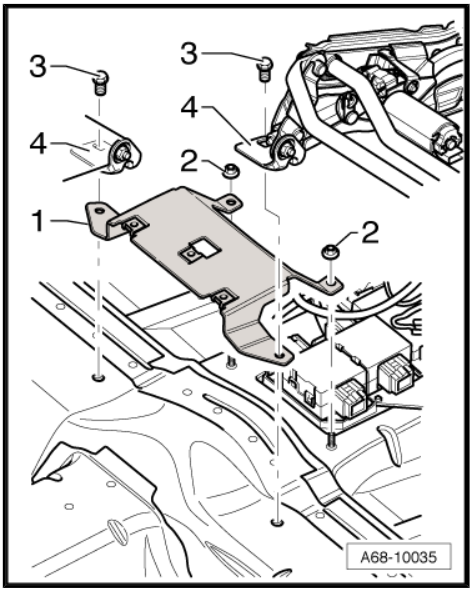

3.14 Bracket for centre console extension (rear)

Special tools and workshop equipment required

- Torque wrench -V.A.G 1410-

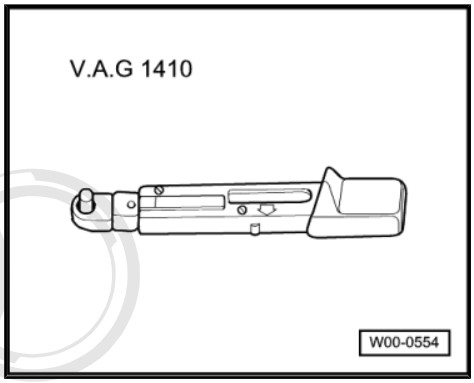

- Remove extension for centre console ⇒ page 59 .
- Remove centre section of backrest ⇒ page 345 .
- Remove nuts -2- (2x). 4 Nm
- Take out bracket -1-.

Protected by copyright. Copying for private or commercial purposes, in part or in whole, is not permitted unless authorised by AUDI AG. AUDI AG does not guarantee or accept any liability with respect to the correctness of information in this document. Copyright by AUDI AG.

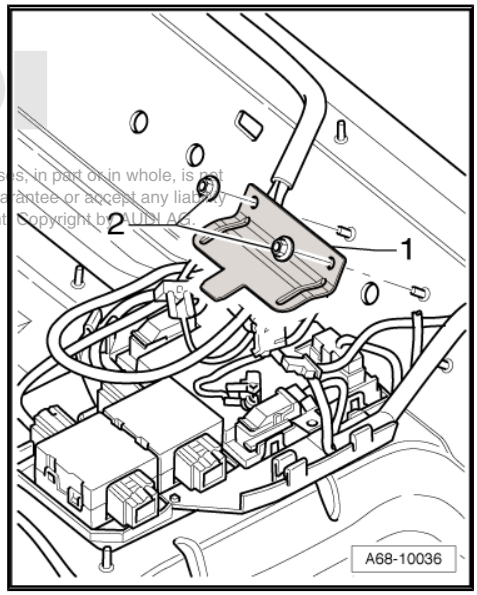

3.15 Removing and installing rear air distributor and rear air duct

Special tools and workshop equipment required

- Torque wrench -V.A.G 1783/-

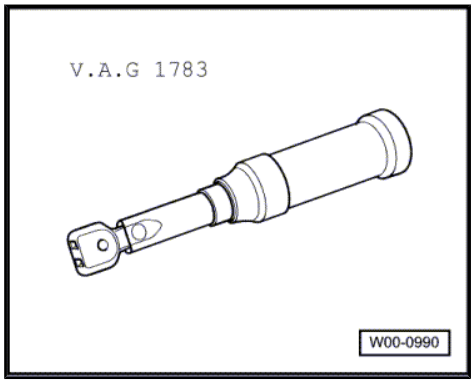

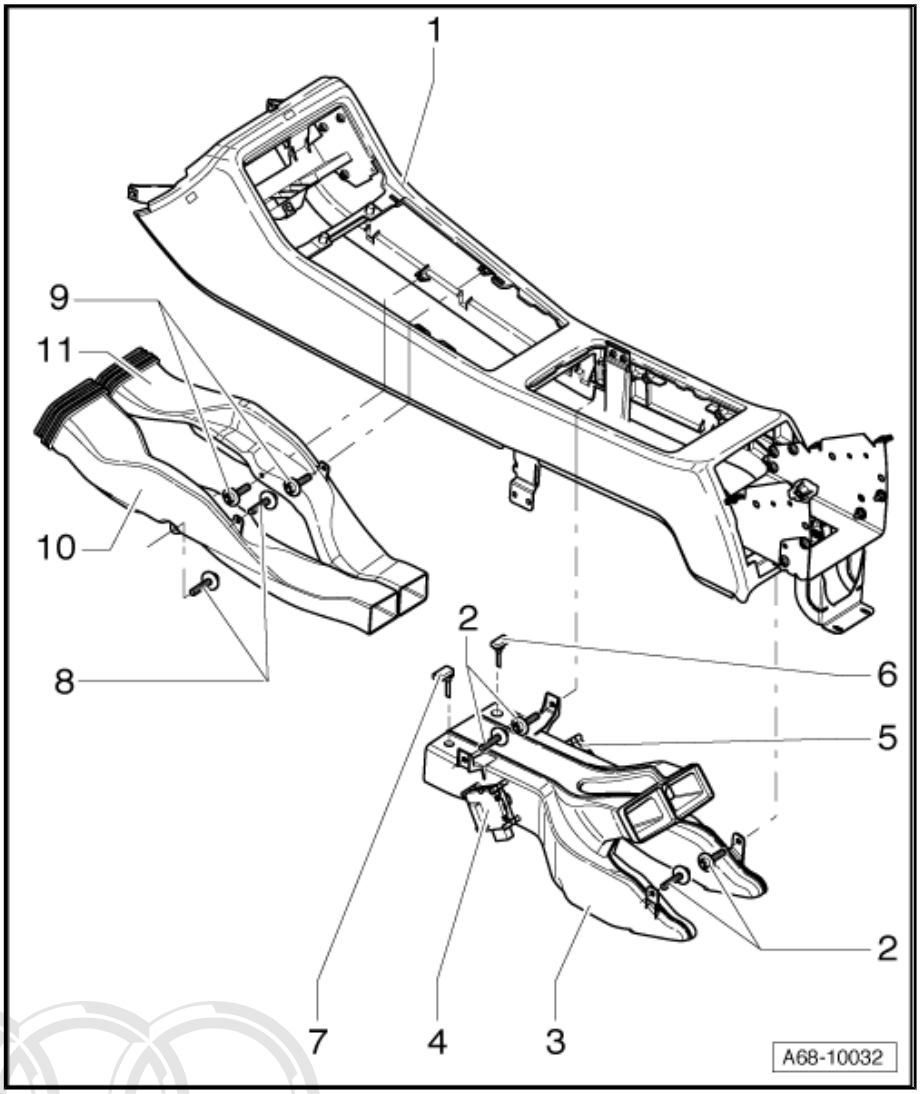

1 - Centre console with extension

2 - Bolts (4x), 2 Nm

3 - Centre console air distributor

- ❑ Rear left vent warm air and cold air flap control motor (-V220-) -4-
- ❑ Rear right vent warm air and cold air flap control motor (-V221-) -5-
- ❑ Rear left centre console temperature sensor (-G311-) -7-
- ❑ Rear right centre console temperature sensor (-G312-) -6-

Removing

Note

– Remove extension for centre console ⇒ page 59 .

– Remove centre console for extension ⇒ page 51 .

– Remove bolts -8- and -9- (4x).

– Pull rear left -10- and rear right -11- air ducts out of centre console air distributor -3-.

– Unplug electrical connectors at rear left (-V220-) -4- and rear right (-V221-) -5- vent warm air and cold air flap control motors.

– Unplug electrical connectors at rear left (-G311-) -7- and rear right (-G312-) -6- centre console temperature sensors.

– Unscrew bolts -2- (4x).

– Take out centre console air distributor -3-.

Installing

Protected by copyright. Copying for private or commercial purposes, in part or in whole, is not permitted unless authorised by AUDI AG. AUDI AG does not guarantee or accept any liability with respect to the correctness of information. Copyright © AUDI AG.

Install in reverse order of removal. Observe the following:

– Observe correct assignment when plugging in connectors at rear left (-V220-) -4- and rear right (-V221-) -5- vent warm air and cold air flap control motors.

– Observe correct assignment when plugging in connectors at rear left (-G311-) -7- and rear right (-G312-) -6- centre console temperature sensors.

4 - Rear left vent warm air and cold air flap control motor -V220-

- ❑ Removing and installing ⇒ Rep. gr. 87

5 - Rear right vent warm air and cold air flap control motor -V221-

- ❑ Removing and installing ⇒ Rep. gr. 87

6 - Rear right centre console temperature sensor -G312-

❑ Removing and installing ⇒ Rep. gr. 87

7 - Rear left centre console temperature sensor -G311-

❑ Removing and installing ⇒ Rep. gr. 87

8 - Bolts (2x), 2 Nm

9 - Bolts (2x), 2 Nm

10 - Rear air duct (left-side)

Removing

– Remove extension for centre console ⇒ page 59 .

– Remove centre console for extension ⇒ page 51 .

– Unscrew bolts -8- (2x).

– Pull rear left air duct out of centre console air distributor -3-.

Installing

Install in reverse order of removal.

11 - Rear air duct (right-side)

Protected by copyright. Copying for private or commercial purposes, in part or in whole, is not permitted unless authorised by AUDI AG. AUDI AG does not guarantee or accept any liability with respect to the correctness of information in this document. Copyright by AUDI AG.

Removing

– Remove extension for centre console ⇒ page 59 .

– Remove centre console for extension ⇒ page 51 .

– Unscrew bolts -9- (2x).

– Pull rear right air duct out of centre console air distributor -3-.

Installing

Install in reverse order of removal.

3.16 Removing and installing intermediate piece for air duct

Special tools and workshop equipment required

♦ Torque wrench -V.A.G 1410-

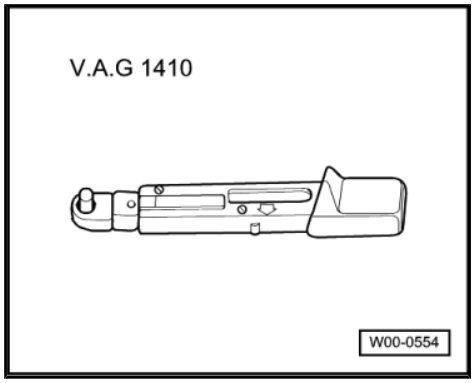

– Remove extension for centre console ⇒ page 59 .
– Remove bolts -2- (4x). 2.5 Nm
– Pull out intermediate piece for air duct -1- towards rear.

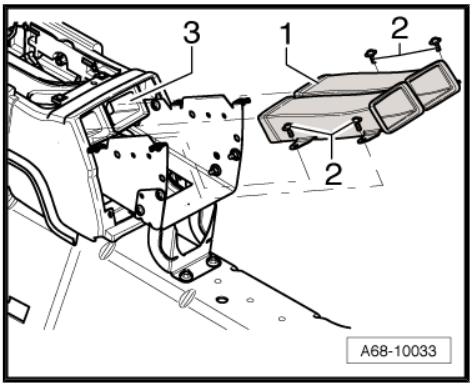

3.17 Removing and installing rear vent and rear Climatronic operating and display unit

Special tools and workshop equipment required

♦ Torque wrench -V.A.G 1410-

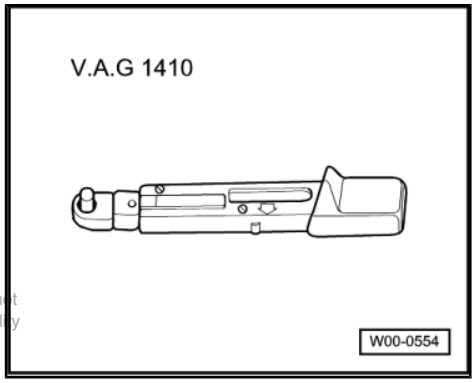

Protected by copyright. Copying for private or commercial purposes, in part or in whole, is not permitted unless authorised by AUDI AG. AUDI AG does not guarantee or accept any liability with respect to the correctness of information in this document. Copyright by AUDI AG.

1 - Extension for centre console

2 - Rear vent

- Remove cup holder unit with small storage compartment lid ⇒ page 61 .
- Remove bolts -4-.
- Pull out rear vent unit -2- and in doing so unplug connectors ⇒ page 72
- Press out air conditioner operating unit -3- from rear.

3 - Air conditioner operating unit (rear)

- Remove cup holder unit with small storage compartment lid ⇒ page 61 .
- Remove bolts -4-.
- Pull out rear vent unit -2- and in doing so unplug connectors ⇒ page 72
- Press out air conditioner operating unit -3- from rear.

4 - Bolts (2x), 2.5 Nm

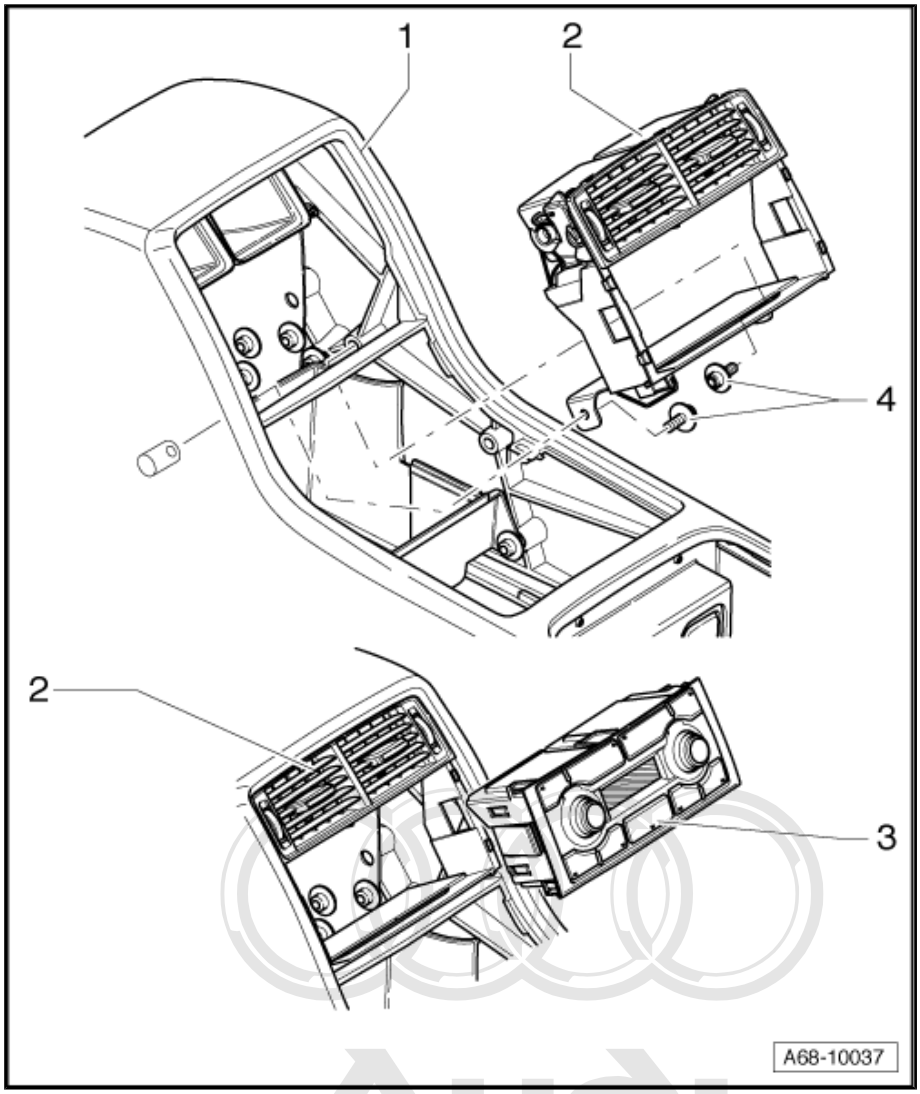

Unplugging connector for air conditioner operating unit

- To unplug electrical connector at rear Climatronic operating and display unit, press catch -1-, turn retaining bracket in direction of -arrow- and unplug connector.

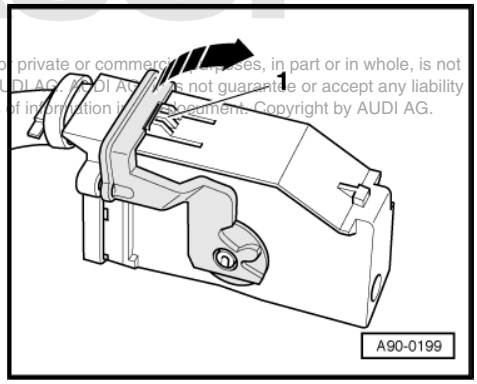

Copying for private or commercial purposes, in part or in whole, is not permitted unless authorised by AUDI AG. AUDI AG does not guarantee or accept any liability with respect to the correctness of information in this document. Copyright by AUDI AG.

3.18 Removing and installing centre console storage compartment (split centre armrest)

Special tools and workshop equipment required

♦ Torque wrench -V.A.G 1410-

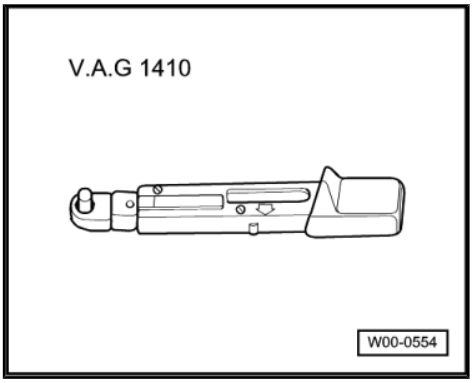

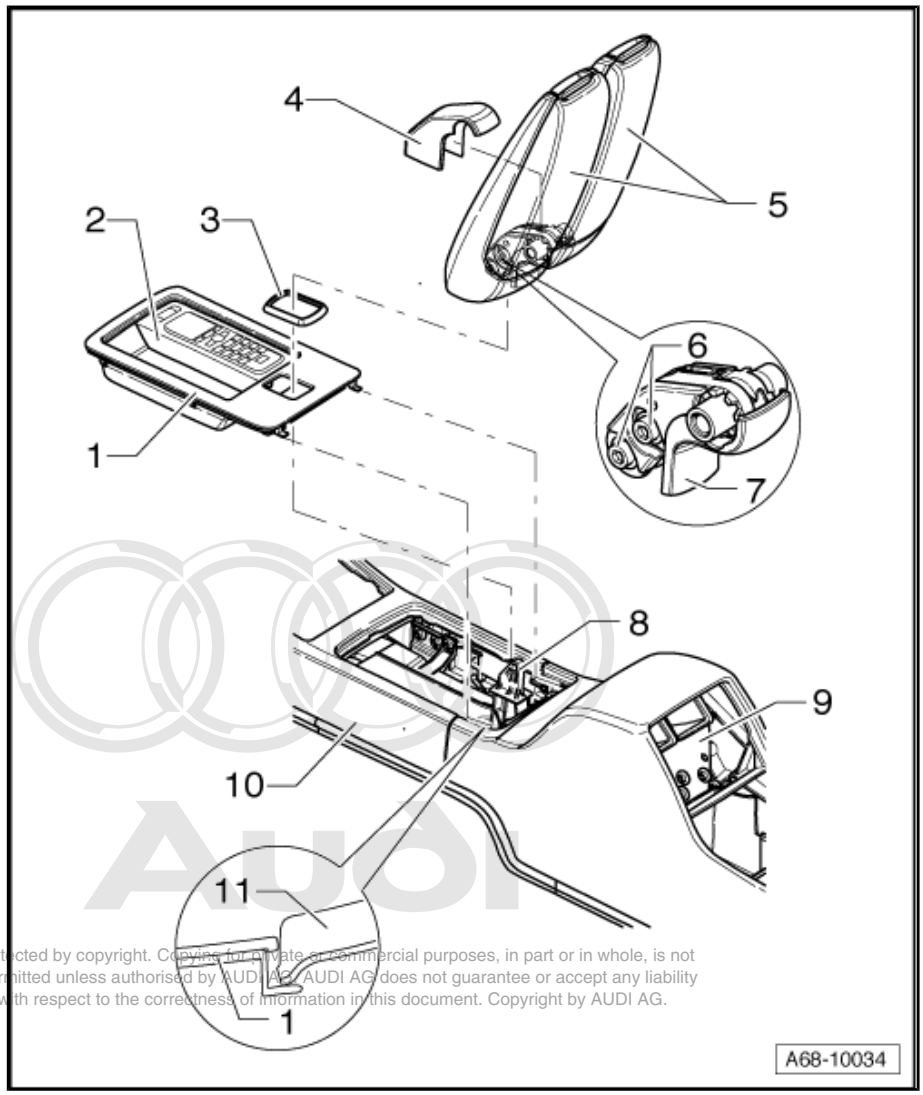

Protected by copyright. Copying for private or commercial purposes, in part or in whole, is not permitted unless authorised by AUDI AG. AUDI AG does not guarantee or accept any liability with respect to the correctness of information in this document. Copyright by AUDI AG.

1 - Storage compartment

❑ With handset cradle (optional)

♦ Removing

– Switch off ignition.
– Swivel centre armrest -5- upwards.
– Detach upper support trim -4-.
– Unscrew bolts -6- (2x).
– Detach centre armrest -5- from lower support -8-.
– Unclip grommet -3-.
– Unclip storage compartment -1-.
– Swivel storage compartment upwards and at the same time pull it in direction of travel out of centre console -10- / extension for centre console -11-.
– Unplug connector on vehicles with handset cradle -2-.
– Take out storage compartment -1-.

♦ Installing

Install in reverse order of removal.

2 - Handset cradle

❑ Removing and installing
⇒ Rep. gr. 91

3 - Grommet

4 - Upper support trim

5 - Centre armrest

6 - Bolts (2x), 18 Nm

❑ Included in scope of delivery of centre armrest

7 - Upper support

❑ Included in scope of delivery of centre armrest

8 - Lower support

9 - Opening for vent

- ❑ Centre armrest connector is located in opening for vent - 9-.

10 - Centre console with extension

11 - Extension for centre console

Protected by copyright. Copying for private or commercial purposes, in part or in whole, is not permitted unless authorised by AUDI AG. AUDI AG does not guarantee or accept any liability with respect to the correctness of information in this document. Copyright by AUDI AG.

4 Front centre armrest (one-piece)

Overview

- ⇒ „4.1 Removing and installing centre armrest (one-piece)“, page 75
- ⇒ „4.2 Dismantling and assembling centre armrest (one-piece)“, page 77
- ⇒ „4.3 Removing and installing bracket for centre armrest“, page 78
- ⇒ „4.4 Removing and installing centre armrest stop“, page 79
- ⇒ „4.5 Removing and installing carrier for centre armrest“, page 80
- ⇒ „4.6 Removing and installing padding for centre armrest (one-piece)“, page 81
- ⇒ „4.7 Removing and installing cover panel for centre armrest (one-piece)“, page 82
- ⇒ „4.7 Removing and installing cover panel for centre armrest (one-piece)“, page 82
- ⇒ „4.8 Removing and installing gas strut for centre armrest“, page 82

Protected by copyright. Copying for private or commercial purposes, in part or in whole, is not permitted unless authorised by AUDI AG. AUDI AG does not guarantee or accept any liability with respect to the correctness of information in this document. Copyright by AUDI AG.

4.1 Removing and installing centre armrest (one-piece)

Special tools and workshop equipment required

- Torque wrench -V.A.G 1783/-

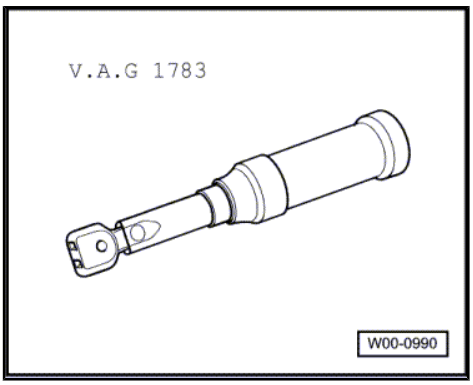

1 - Centre armrest

❑ One-piece version

♦ Removing

– Switch off ignition.
– Swivel centre armrest -1- upwards.
– Remove storage compartment ⇒ page 39 .
– Unscrew bolts -4- (3x).
– Detach centre armrest -1- from bracket for centre armrest -3-.

♦ Installing

Install in reverse order of removal.

2 - Centre console

3 - Bracket for centre armrest

4 - Bolts (3x), 4 Nm

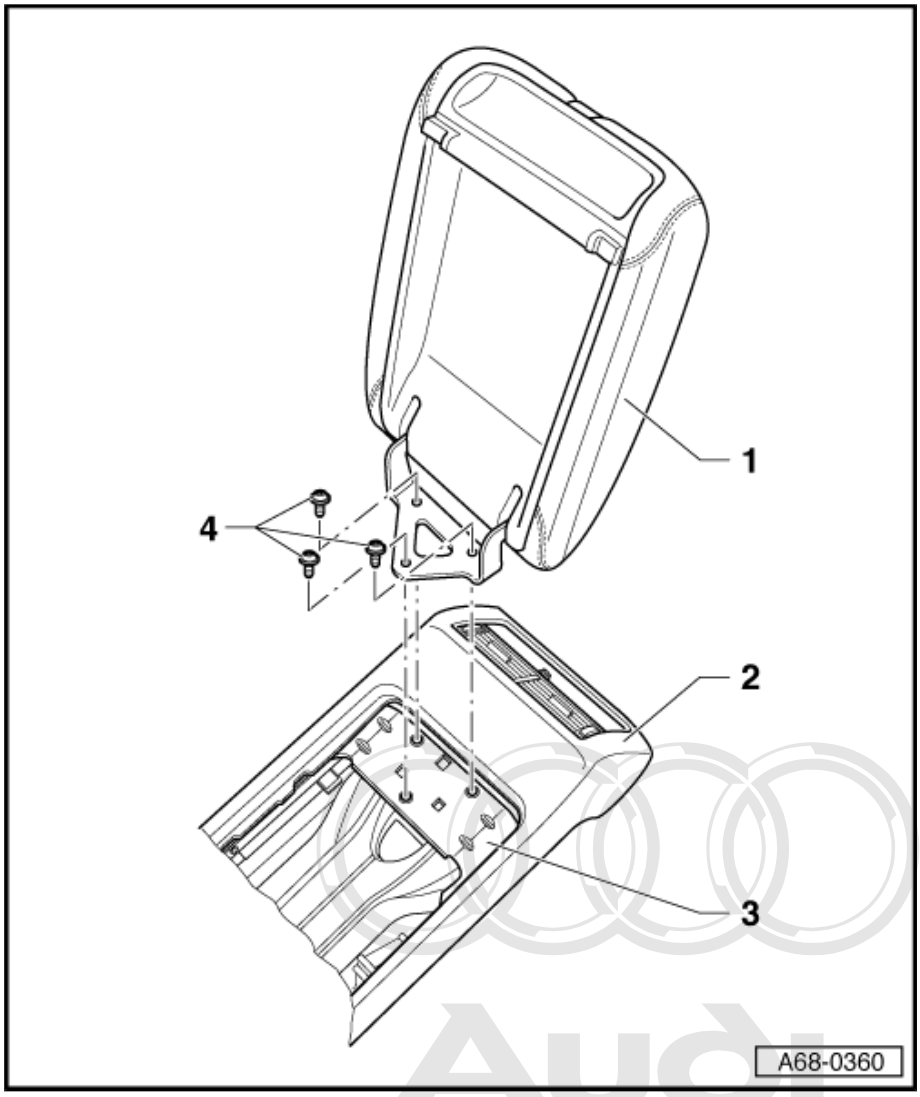

Protected by copyright. Copying for private or commercial purposes, in part or in whole, is not permitted unless authorised by AUDI AG. AUDI AG does not guarantee or accept any liability with respect to the correctness of information in this document. Copyright by AUDI AG.

4.2 Dismantling and assembling centre armrest (one-piece)

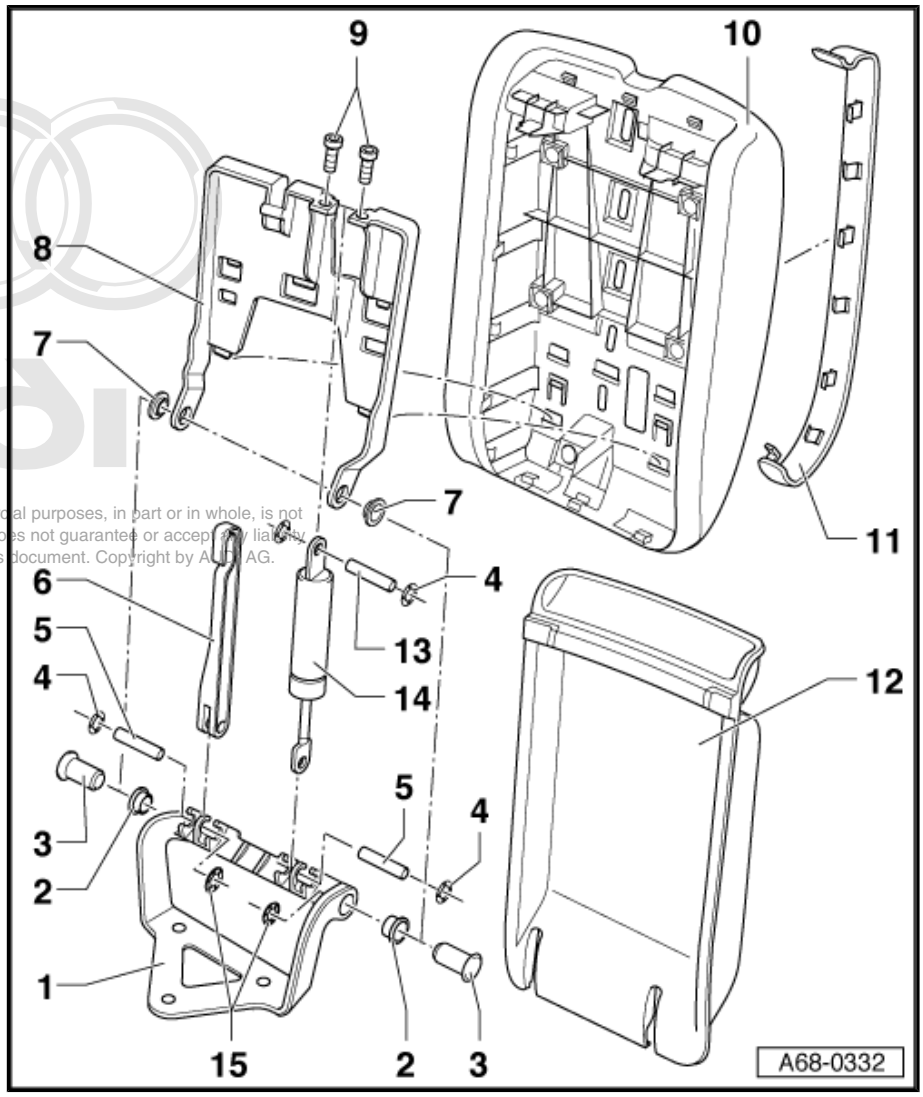

1 - Bracket
- ❑ Removing and installing ⇒ page 78

2 - Bush
- ❑ For bracket ⇒ Item 1 (page 77)

3 - Pivot pin

4 - Securing clip
- ❑ Always renew after removing

5 - Pin

6 - Stop
- ❑ Removing and installing ⇒ page 79

Protected by copyright. Copying for private or commercial purposes, in part or in whole, is not permitted unless authorised by AUDI AG. AUDI AG does not guarantee or accept any liability with respect to the correctness of information in this document. Copyright by AUDI AG.

7 - Bush
- ❑ For carrier ⇒ Item 8 (page 77)

8 - Carrier
- ❑ Removing and installing ⇒ page 80

9 - Bolts (2x), 2 Nm

10 - Padding
- ❑ Removing and installing ⇒ page 81

11 - Trim strip
- ❑ Discontinued

12 - Cover
- ❑ Removing and installing ⇒ page 82

13 - Pin

14 - Gas strut
- ❑ Removing and installing ⇒ page 82

15 - Securing clip
- ❑ Always renew after removing

4.3 Removing and installing bracket for centre armrest

Removing

– Remove centre armrest ⇒ page 75 .

– Starting at bottom -arrow-, carefully prise cover -1- off padding -2-.

– Take out cover.

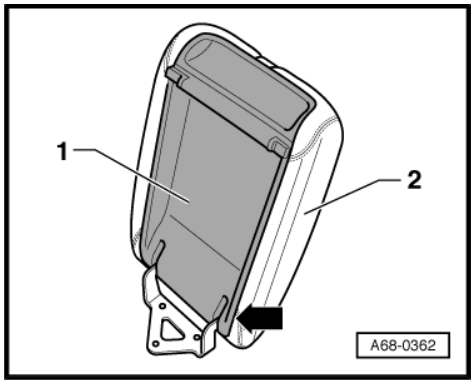

– Press down retaining tabs -1-.

– At the same time, press carrier -2- in direction of -arrow- until lugs of carrier are disengaged from guides of padding -3-.

– Take bracket with carrier out of padding.

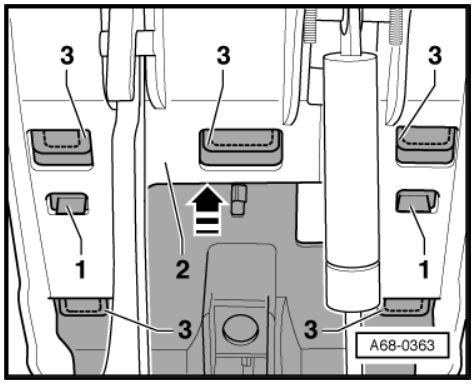

– Prise off securing clip -1-.

– Remove pins -2-. Use mandrel if necessary.

– Prise off securing clip -6-.

– Remove pin -7-. Use mandrel if necessary.

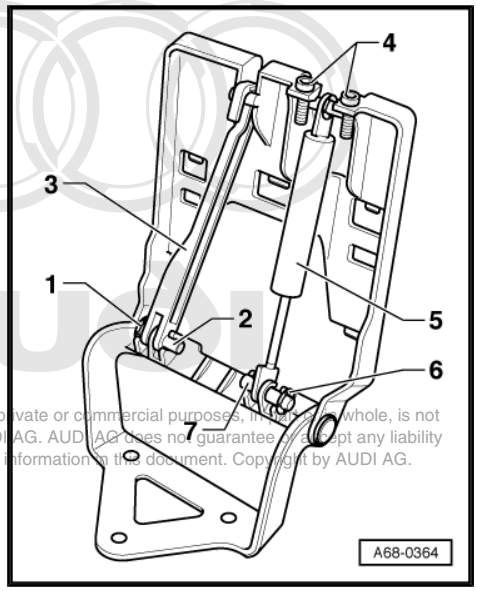

Protected by copyright. Copying for private or commercial purposes, in part or in whole, is not permitted unless authorised by AUDI AG. AUDI AG does not guarantee or accept any liability with respect to the correctness of information in this document. Copyright by AUDI AG.

– Prise out securing clips -arrows-.
– Pull out pivot pins -1- and -3-.

1 - Bracket

2 - Carrier

Installing

Install in reverse order of removal. Observe the following:

– Always renew securing clips following removal.
– Make sure carrier and padding fully engage.

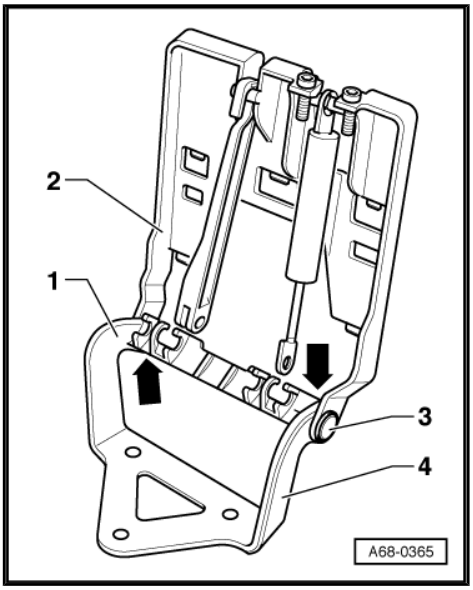

4.4 Removing and installing centre armrest stop

Protected by copyright. Copying for private or commercial purposes, in part or in whole, is not permitted unless authorised by AUDI AG. AUDI AG does not guarantee or accept any liability with respect to the correctness of information in this document. Copyright by AUDI AG.

Removing

– Remove centre armrest ⇒ page 75 .
– Starting at bottom -arrow-, carefully prise cover -1- off padding -2-.
– Take out cover.

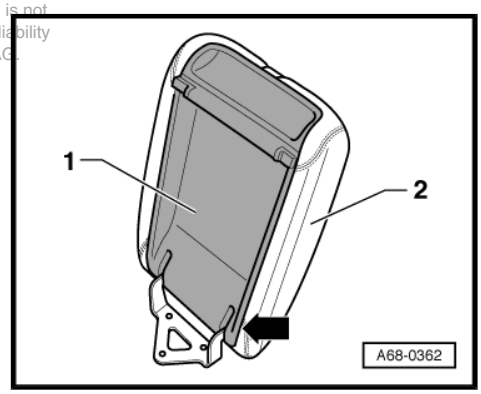

– Press down retaining tabs -1-.
– At the same time, press carrier -2- in direction of -arrow- until lugs of carrier are disengaged from guides of padding -3-.
– Take bracket with carrier out of padding.

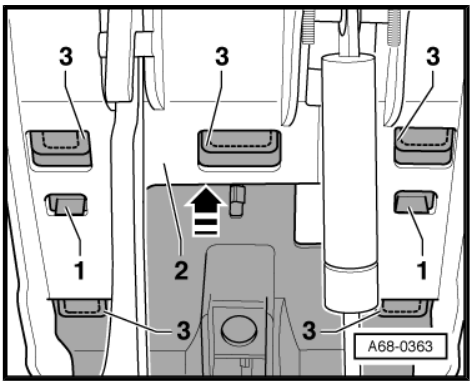

– Prise off securing clip -1-.
– Remove pins -2-. Use mandrel if necessary.
– Disengage stop -3- at top of carrier.

Installing

Install in reverse order of removal. Observe the following:

– Always renew securing clip following removal.
– Make sure carrier and padding fully engage.

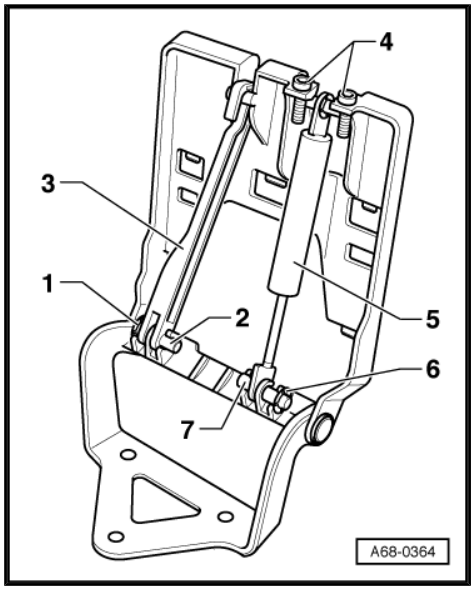

4.5 Removing and installing carrier for centre armrest

Removing

– Remove centre armrest ⇒ page 75 .
– Starting at bottom -arrow-, carefully prise cover -1- off padding -2-.
– Take out cover.

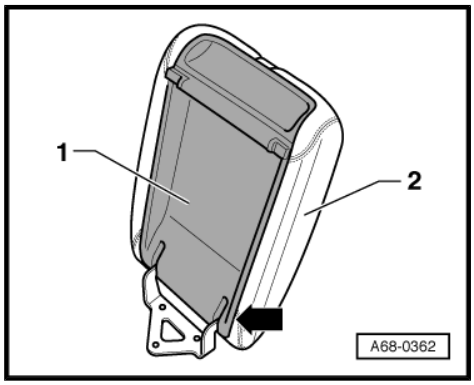

– Press down retaining tabs -1-.
– At the same time, press carrier -2- in direction of -arrow- until lugs of carrier are disengaged from guides of padding -3-.
– Take bracket with carrier out of padding.

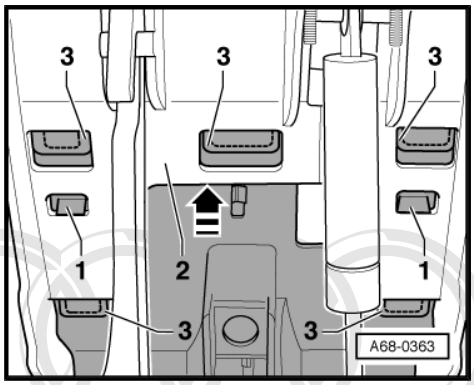

Protected by copyright. Copying for private or commercial purposes, in part or in whole, is not permitted unless authorised by AUDI AG. AUDI AG does not guarantee or accept any liability with respect to the correctness of information in this document. Copyright by AUDI AG.

– Prise off securing clip -1-.
– Remove pins -2-. Use mandrel if necessary.
– Disengage stop -3- at top of carrier.
– Prise off securing clip -6-.
– Remove pin -7-. Use mandrel if necessary.
– Unscrew bolts -4- (2x).
– Take out gas strut -5-.

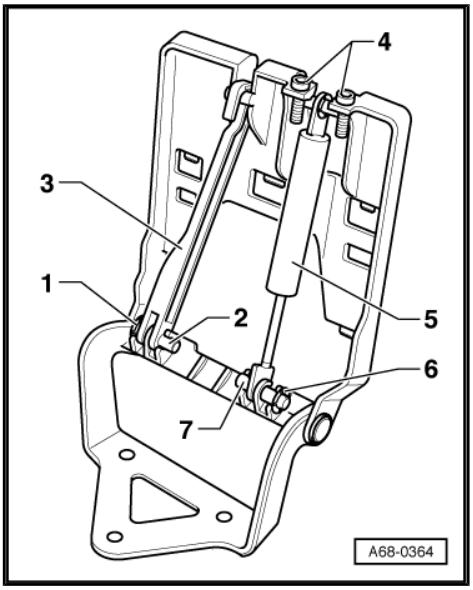

– Prise out securing clips -arrows-.
– Pull out pivot pins -1- and -3-.

1 - Bracket

2 - Carrier

Installing

Install in reverse order of removal. Observe the following:

– Always renew securing clips following removal.
– Make sure carrier and padding fully engage.

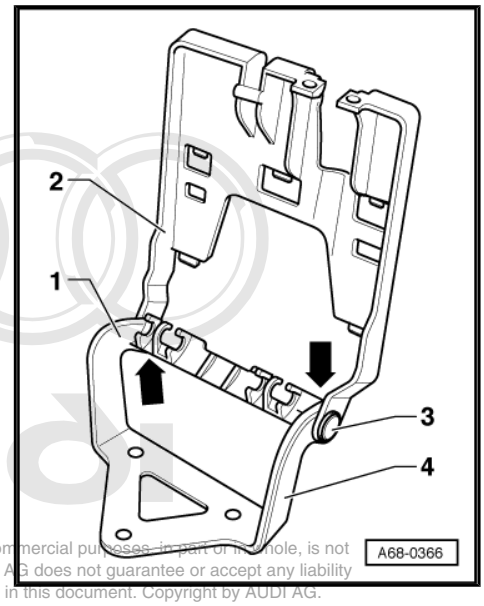

Protected by copyright. Copying for private or commercial purposes, in part or in whole, is not permitted unless authorised by AUDI AG. AUDI AG does not guarantee or accept any liability with respect to the correctness of information in this document. Copyright by AUDI AG.

4.6 Removing and installing padding for centre armrest (one-piece)

Removing

– Remove centre armrest ⇒ page 75 .
– Starting at bottom -arrow-, carefully prise cover -1- off padding -2-.
– Take out cover.

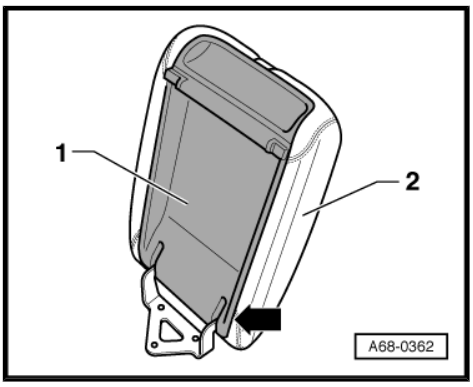

– Press down retaining tabs -1-.
– At the same time, press carrier -2- in direction of -arrow- until lugs of carrier are disengaged from guides of padding -3-.
– Detach padding from bracket with carrier.

Installing

Install in reverse order of removal. Observe the following:

– Make sure carrier and padding fully engage.

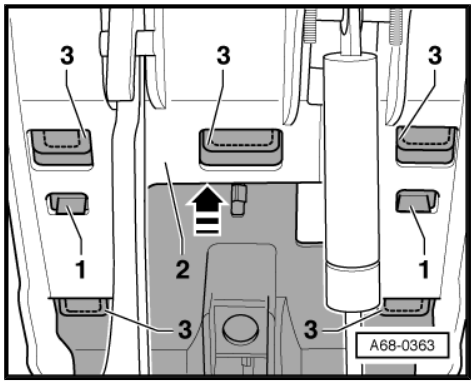

4.7 Removing and installing cover panel for centre armrest (one-piece)

Removing

– Remove centre armrest ⇒ page 75 .
– Starting at bottom -arrow-, carefully prise cover -1- off padding -2-.
– Take out cover.

Installing

Install in reverse order of removal.

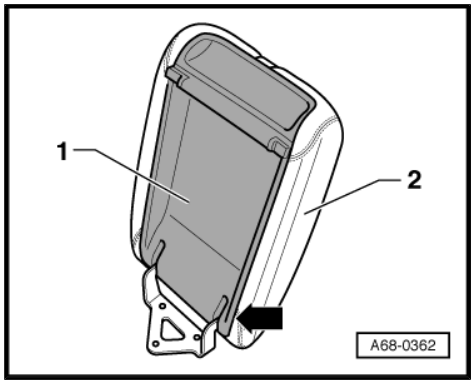

4.8 Removing and installing gas strut for centre armrest

Removing

– Remove centre armrest ⇒ page 75 .
– Starting at bottom -arrow-, carefully prise cover -1- off padding -2-.
– Take out cover.

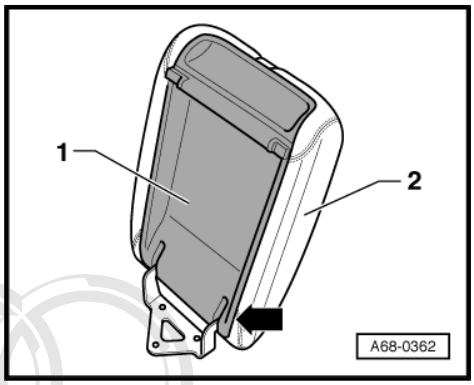

– Press down retaining tabs -1-.
– At the same time, press carrier -2- in direction of -arrow- until lugs of carrier are disengaged from guides of padding -3-.
– Take bracket with carrier out of padding.

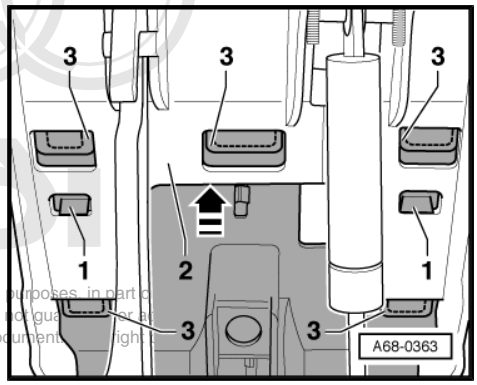

Protected by copyright. Copying for private or commercial purposes, in part or
permitted unless authorised by AUDI AG. AUDI AG does not guarantee or as
with respect to the correctness of information in this document. Copyright

– Prise off securing clip -6-.
– Remove pin -7-. Use mandrel if necessary.
– Unscrew bolts -4- (2x).
– Take out gas strut -5-.

Installing

Install in reverse order of removal. Observe the following:

– Always renew securing clip following removal.
– Make sure carrier and padding fully engage.

Tightening torque:

Bolts in carrier for securing gas strut ⇒ Item 9 (page 77) , ⇒ Item 9 (page 77)

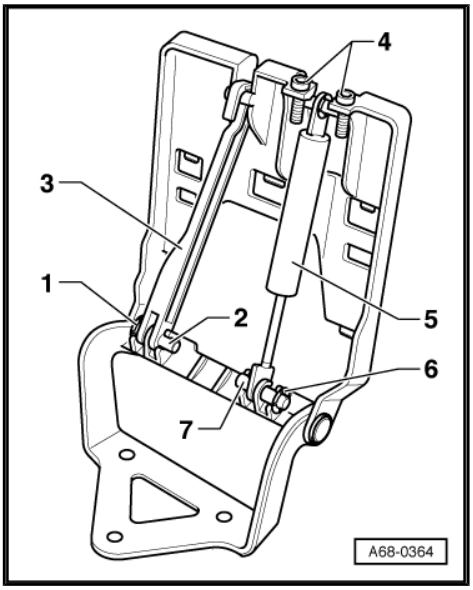

Protected by copyright. Copying for private or commercial purposes, in part or in whole, is not permitted unless authorised by AUDI AG. AUDI AG does not guarantee or accept any liability with respect to the correctness of information in this document. Copyright by AUDI AG.

5 Front centre armrest (split)

Overview

- ⇒ „5.1 Removing and installing centre armrest (split)“, page 84
- ⇒ „5.2 Removing and installing lower support (split centre armrest)“, page 85
- ⇒ „5.3 Dismantling and assembling centre armrest (split)“, page 86
- ⇒ „5.4 Removing and installing cover panel for centre armrest (split)“, page 87
- ⇒ „5.5 Removing and installing padding for centre armrest (split)“, page 87
- ⇒ „5.6 Removing and installing split centre armrest storage compartment“, page 88
- ⇒ „5.7 Removing and installing lower cover panel for centre armrest (split)“, page 88
- ⇒ „5.8 Removing and installing trim“, page 89
- ⇒ „5.9 Removing and installing storage compartment light“, page 90
- ⇒ „5.10 Separating centre armrest (split)“, page 90

Protected by copyright. Copying for private or commercial purposes, in part or in whole, is not permitted unless authorised by AUDI AG. AUDI AG does not guarantee or accept any liability with respect to the correctness of information in this document. Copyright by AUDI AG.

5.1 Removing and installing centre armrest (split)

Special tools and workshop equipment required

- Torque wrench -V.A.G 1410-

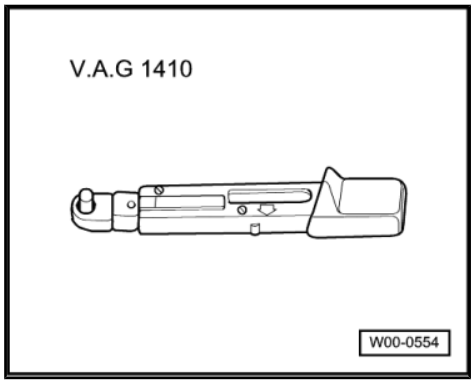

1 - Centre armrest

- ❑ Split version

♦ Removing

- – Switch off ignition.
- – Swivel centre armrest -1- upwards.
- – Detach upper support trim -9-.
- – Unscrew bolts -3- (2x).
- – Detach centre armrest -1- from lower support -6-.

♦ Installing

Install in reverse order of removal.

2 - Upper support

- ❑ Included in scope of delivery of centre armrest

3 - Bolts (2x), 18 Nm

4 - Centre console

5 - Nuts (4x), 18 Nm

6 - Lower support

- ❑ Removing and installing ⇒ page 85

7 - Storage compartment

- ❑ Removing and installing ⇒ page 39

8 - Grommet

9 - Upper support trim

- ❑ Clipped in

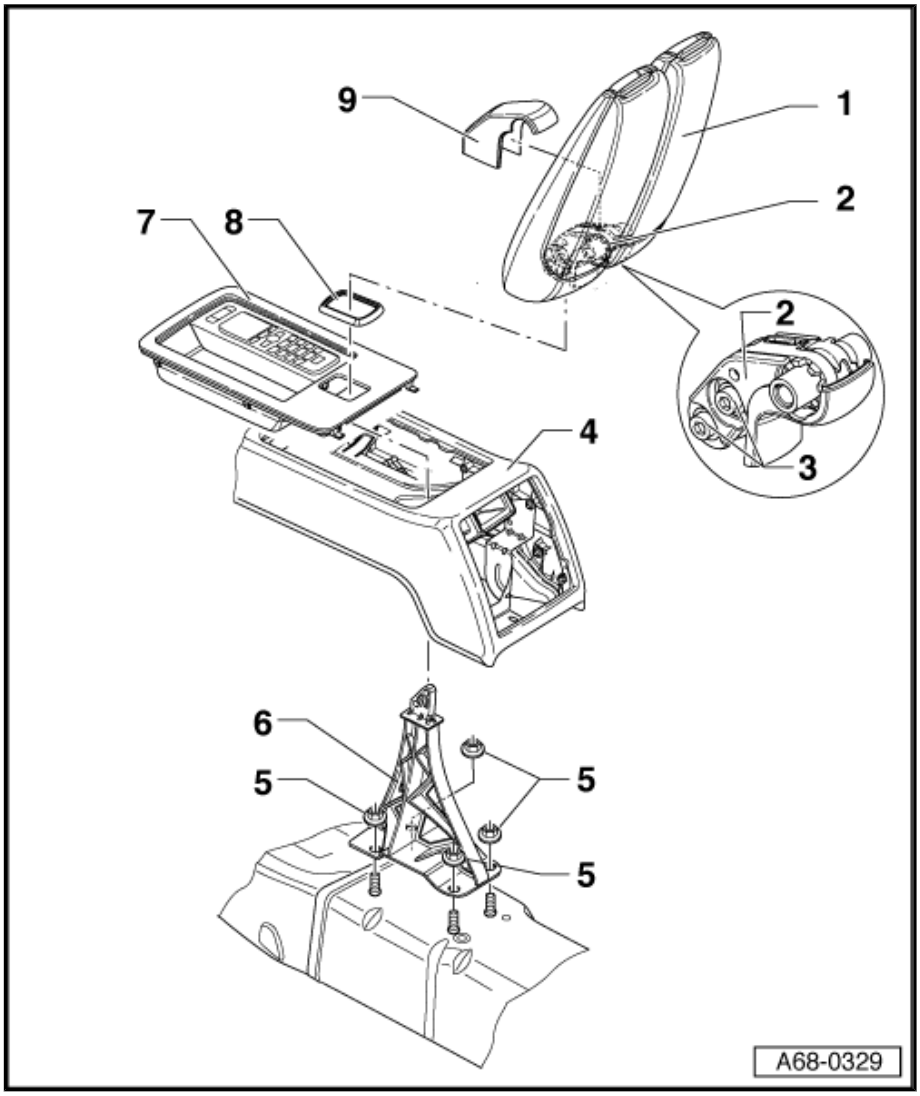

5.2 Removing and installing lower support (split centre armrest)

Special tools and workshop equipment required

♦ Torque wrench -V.A.G 1410-

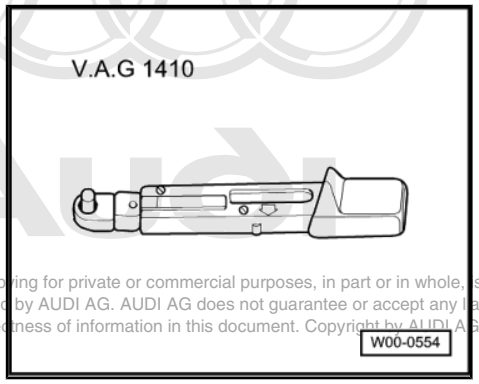

Protected by copyright. Copying for private or commercial purposes, in part or in whole, is not permitted unless authorised by AUDI AG. AUDI AG does not guarantee or accept any liability with respect to the correctness of information in this document. Copyright by AUDI AG.

Removing

– Remove centre armrests ⇒ page 84 .
– Remove centre console ⇒ page 19 .
– Unscrew nuts -1- (4x).
– Detach lower support -2- from threaded pins.

Installing

Install in reverse order of removal.

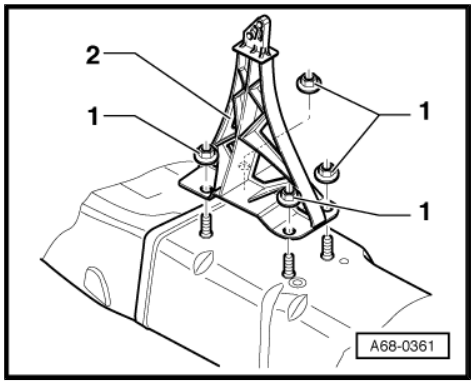

5.2.1 Tightening torque:

Lower support to floor of vehicle ⇒ Item 5 (page 85)

5.3 Dismantling and assembling centre armrest (split)

Protected by copyright. Copying for private or commercial purposes, in part or in whole, is not permitted unless authorised by AUDI AG. AUDI AG does not guarantee or accept any liability with respect to the correctness of information in this document. Copyright by AUDI AG.

1 - Cover
- ❑ Removing and installing ⇒ page 87

2 - Padding
- ❑ Removing and installing ⇒ page 87

3 - Button
- ❑ For opening centre armrest

4 - Spring
- ❑ For button ⇒ Item 3 (page 86)
- ❑ Not fixed in position

5 - Bolts (5x), 0.7 Nm

6 - Storage compartment light
- ❑ LED
- ❑ Renew if defective
- ❑ Removing and installing ⇒ page 90

7 - Carrier with adjuster
- ❑ Dismantling carrier with adjuster is not intended
- ❑ It is only permissible to separate the two individual armrests

8 - Storage compartment
- ❑ Removing and installing ⇒ page 88

9 - Trim
- ❑ For carrier with adjuster
- ❑ Removing and installing ⇒ page 89

10 - Cover (bottom)
- ❑ Removing and installing ⇒ page 88

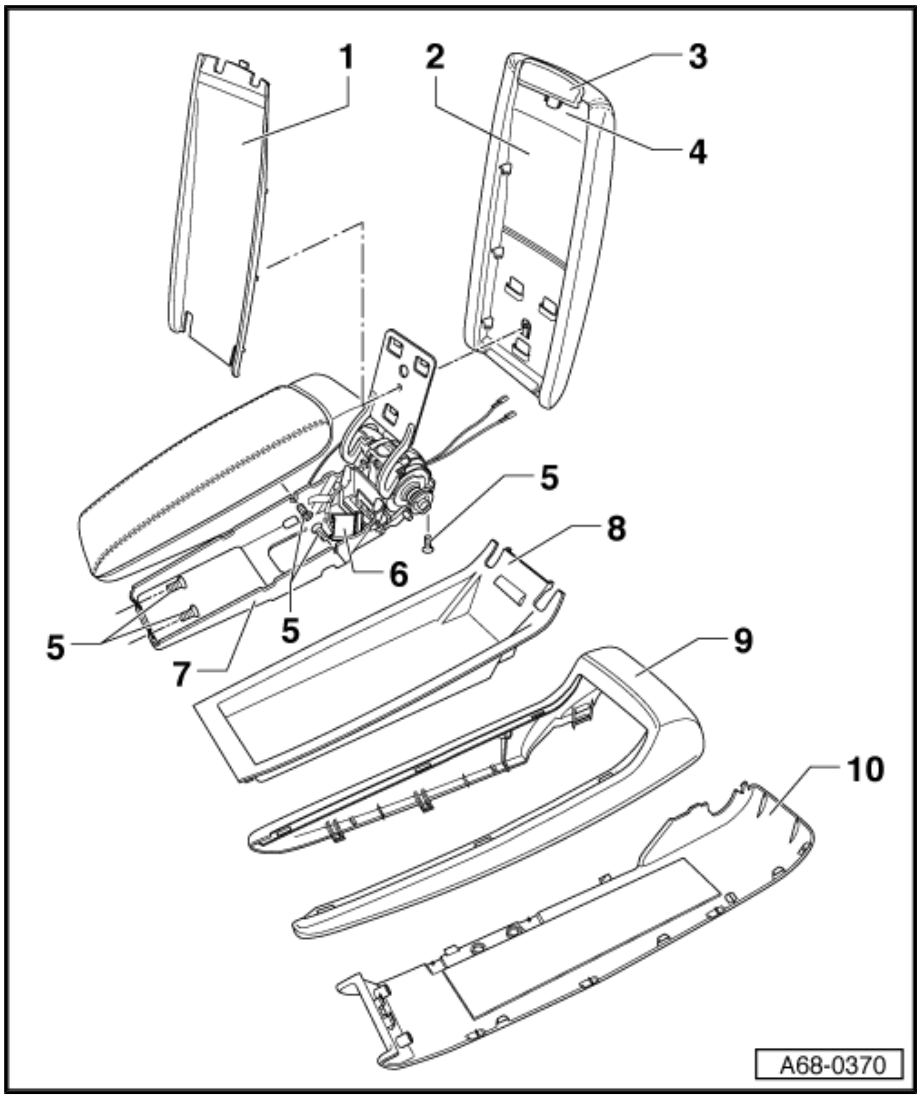

5.4 Removing and installing cover panel for centre armrest (split)

Note

- *Never press button in padding after removing cover panel.*
- *Pressing button would cause inserted spring to be ejected.*

Removing

– Remove centre armrest (split) ⇒ page 84 .

– Open centre armrest.

– Starting at bottom -arrow-, carefully prise cover -1- off padding -3-.

– Pull out cover panel -1- downwards.

Installing

– Slide cover panel -1- beneath button -2-.

– Clip cover panel -1- to padding -3-.

– Install centre armrest (split) ⇒ page 84 .

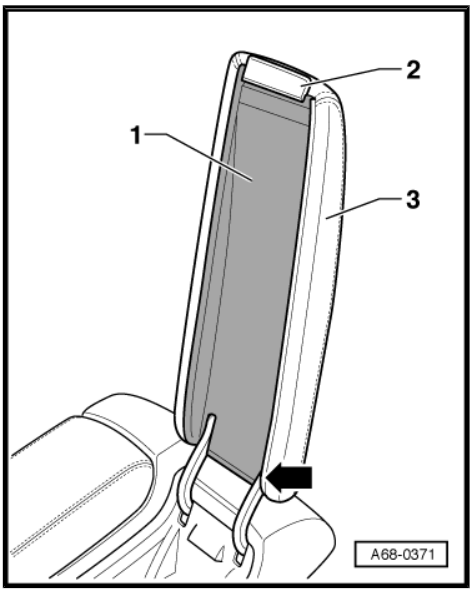

5.5 Removing and installing padding for centre armrest (split)

Removing

– Remove centre armrest (split) ⇒ page 84 .

– Open centre armrest.

– Remove cover panel ⇒ page 87 .

– Press padding -1- in direction of -arrow- until lugs of carrier -2- are disengaged from guides of padding -1- and retaining tab -3- is released.

Protected by copyright. Copying for private or commercial purposes, in part or in whole, is not permitted unless authorised by AUDI AG. AUDI AG does not guarantee or accept any liability with respect to the correctness of information in this document. Copyright by AUDI AG.

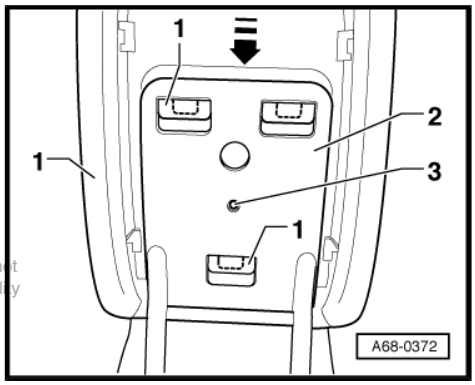

Note

- *Never press button in padding after removing cover panel.*
- *Pressing button would cause inserted spring to be ejected.*

– After disengaging tabs of carrier -2- detach padding -1-.

Installing

Installation is carried out in reverse order; note the following:

– Make sure carrier and padding fully engage.

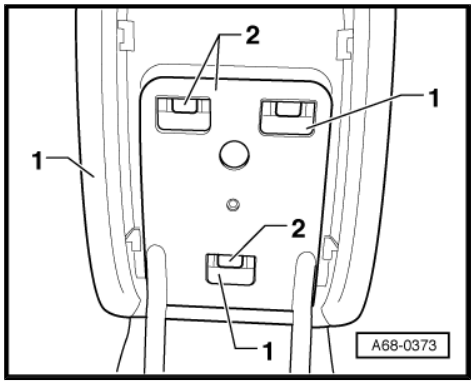

5.6 Removing and installing split centre armrest storage compartment

Removing

Note

Storage compartment can be removed and installed with armrest in position.

– Open centre armrest.

– Starting at front -arrow-, carefully prise storage compartment -1- off trim -2- and lower cover panel -3-.

– Pull out storage compartment -1- towards front.

– Unclip light.

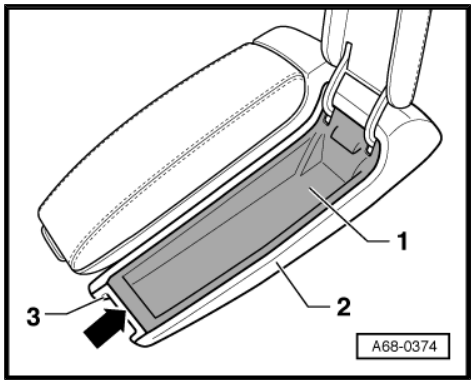

Installing

– Clip in light.

– Engage storage compartment -1- at rear in area of arms -arrow A-.

– Press storage compartment -1- to rear and at the same time engage it by pressing in direction of arrow.

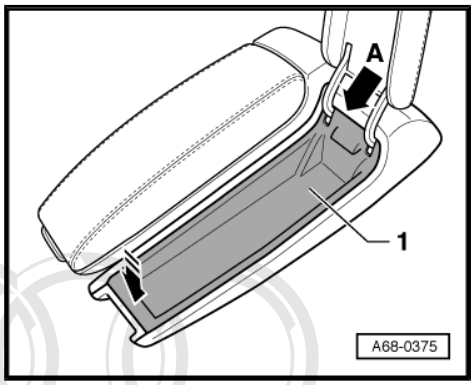

5.7 Removing and installing lower cover panel for centre armrest (split)

Removing

– Remove centre armrest (split) ⇒ page 84 .

– Open centre armrest.

– Remove storage compartment ⇒ page 88 .

– Unscrew bolts -2- (2x).

1 - Cover (bottom)

3 - Carrier with adjuster

4 - Trim

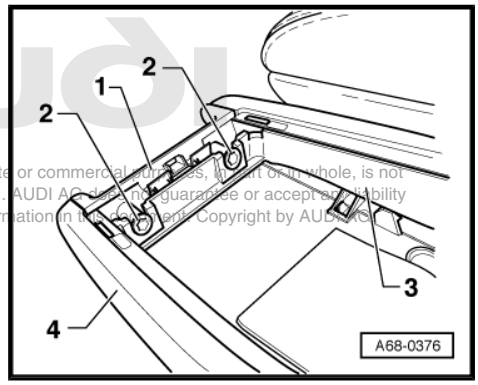

Protected by copyright. Copying for private or commercial purposes, in part or in whole, is not permitted unless authorised by AUDI AG. AUDI AG does not guarantee or accept any liability with respect to the correctness of information in this document. Copyright by AUDI AG.

– Starting on side at front -arrow-, carefully prise lower cover panel -1- off side section -2-.
– Detach lower cover panel -1-.

Installing

Install in reverse order of removal.

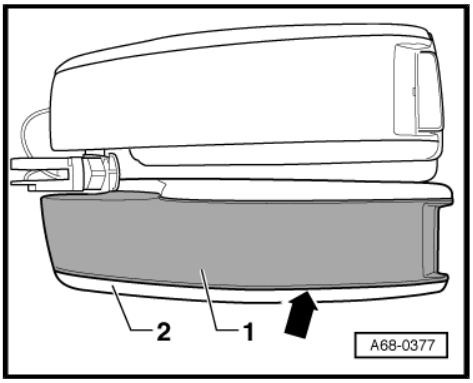

5.7.1 Tightening torque:

♦ Cover (bottom) to carrier with adjuster: 0.7 Nm

5.8 Removing and installing trim

Removing

– Remove centre armrest (split) ⇒ page 84 .
– Remove storage compartment ⇒ page 88 .
– Remove lower cover panel ⇒ page 88 .
– Unscrew bolts -1- (2x).

2 - Trim

3 - Carrier with adjuster

Protected by copyright. Copying for private or commercial purposes, in part or in whole, is not permitted unless authorised by AUDI AG. AUDI AG does not guarantee or assume any liability with respect to the correctness of information in this document. Copyright by AUDI AG.

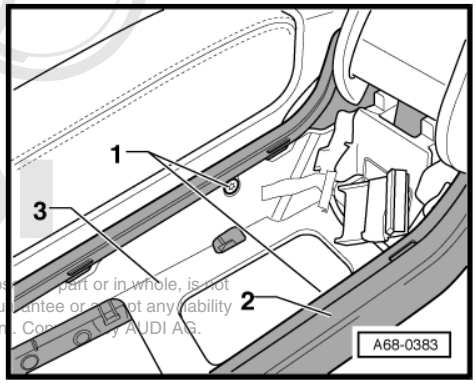

– Remove bolt -2-.
– Detach trim -1-.

Installing

Install in reverse order of removal.

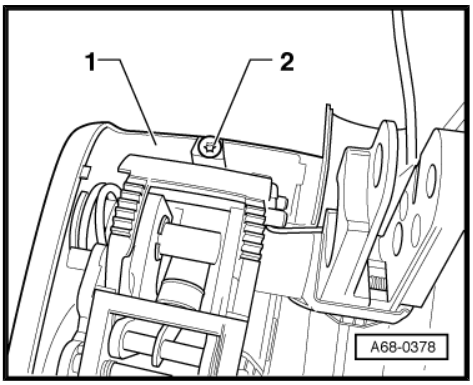

5.8.1 Tightening torque:

♦ Trim to carrier with adjuster: 0.7 Nm

5.9 Removing and installing storage compartment light

Removing

– Remove centre armrest (split) ⇒ page 84 .
– Remove storage compartment -1- ⇒ page 88 .
– Unclip light -2-.
– Unfasten adhesive strips.

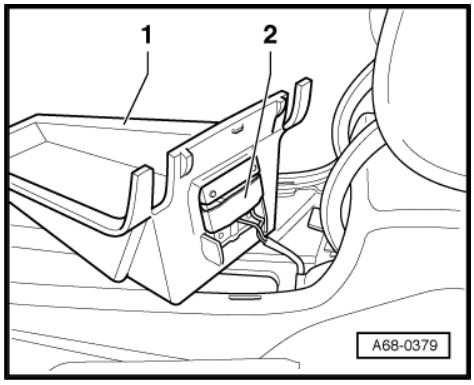

– Remove speed nut -1-.

2 - Wire for storage compartment light

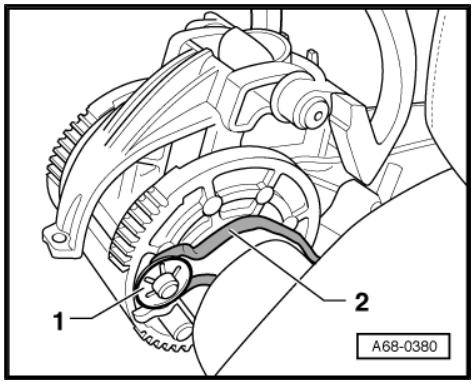

– Take wires -1- and -2- out of locators -arrow-.

Installing

Installation is carried out in reverse order; note the following:

– Route wires in locators at support for split centre armrest.
– Fix wires in position with adhesive tape.
– Make sure wires are neither trapped nor strained as centre armrests move.

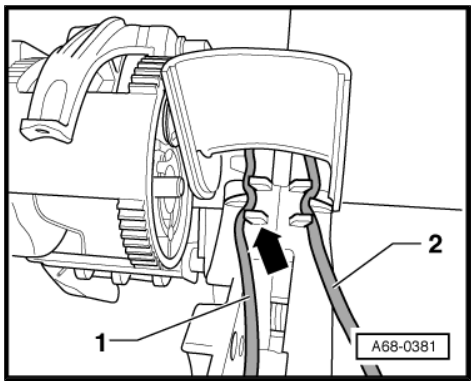

5.10 Separating centre armrest (split)

Special tools and workshop equipment required

♦ Torque wrench -V.A.G 1410-

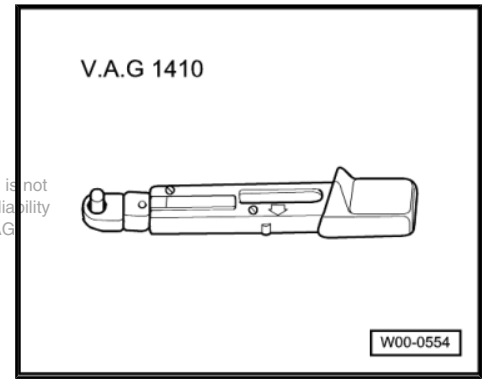

Protected by copyright. Copying for private or commercial purposes, in part or in whole, is not permitted unless authorised by AUDI AG. AUDI AG does not guarantee or accept any liability with respect to the correctness of information in this document. Copyright by AUDI AG

Separating

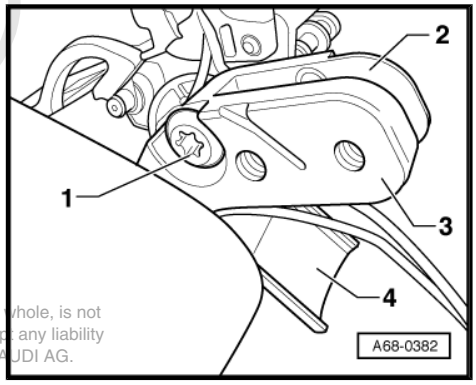

- Remove centre armrest (split) ⇒ page 84 .
- Remove bolt -1-.
- Separate centre armrests.
- Detach upper support trim -4-.

5 - Centre armrest (right-side)

Protected by copyright. Copying for private or commercial purposes, in part or in whole, is not permitted unless authorised by AUDI AG. AUDI AG does not guarantee or accept any liability with respect to the correctness of information in this document. Copyright by AUDI AG.

Assembling

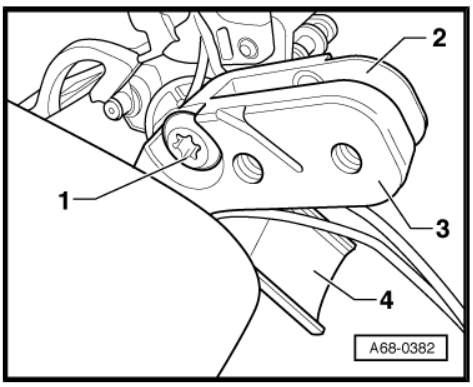

- Fit upper support trim -4-.
- Assemble centre armrest.
- Raise centre armrests (topmost position).
- Move the two centre armrests to the same position by adjusting half support -2- or -3-.
- Screw both half supports -2- and -3- together.
- Mark mutual positioning of half supports.
- Fold down centre armrests (lowest position). Position of both centre armrests must be the same.
- If this is not the case, slacken off bolt -1-.
- Adjust mutual positions of half supports -2- and -3-.
- Repeat this adjustment procedure until position of centre armrests is the same in both top and bottom settings.
- Install centre armrest (split) ⇒ page 84 .

Tightening torque:

Bolted joints of half supports: 15 Nm

6 Interior mirror

Overview

- ⇒ „6.1 Removing and installing interior mirror“, page 92
- ⇒ „6.2 Checking operation of automatic anti-dazzle interior mirror“, page 93

6.1 Removing and installing interior mirror

Note

- *Mirror must be removed if ball joint is not clipped in.*
- *Ball joint must be clipped in whilst removed, at the same time feeding through wiring harness.*

Protected by copyright. Copying for private or commercial purposes, in part or in whole, is not permitted unless authorised by AUDI AG. AUDI AG does not guarantee or accept any liability with respect to the correctness of information in this document. Copyright by AUDI AG.

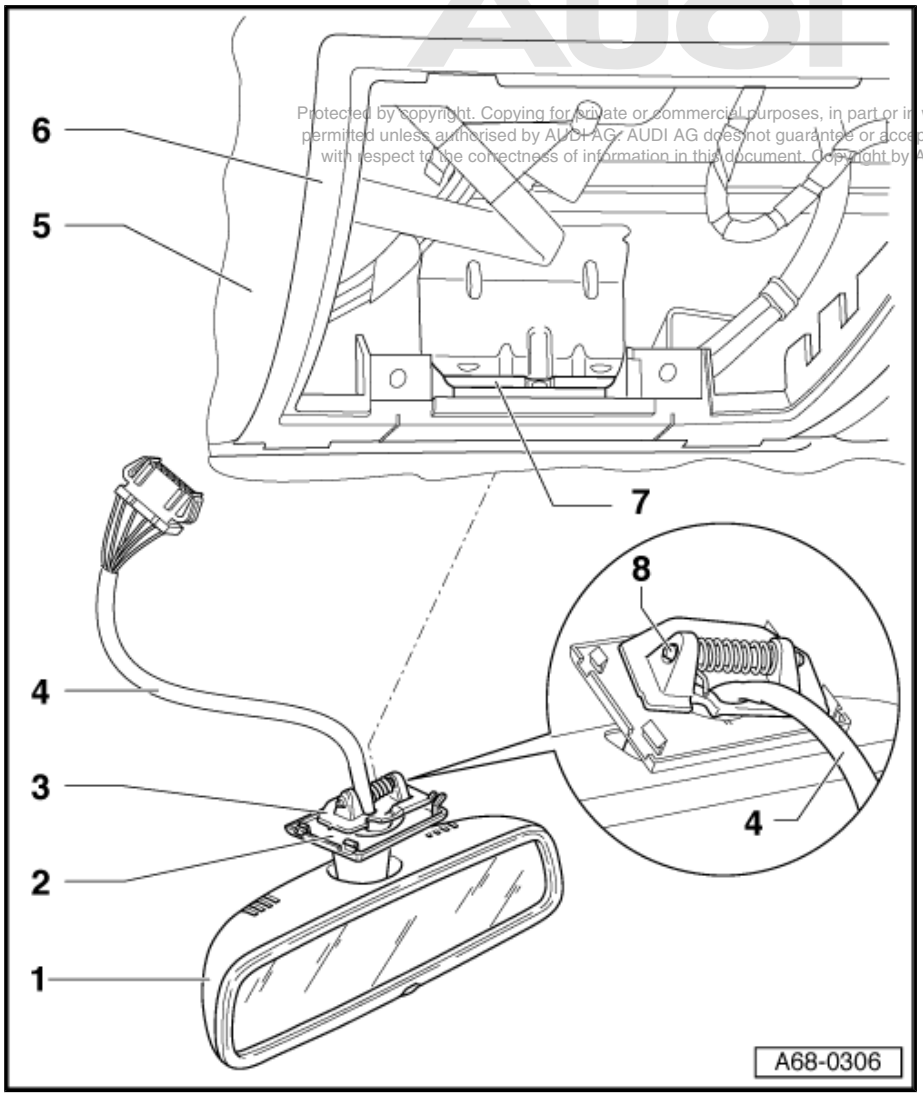

1 - Interior mirror

❑ With automatic anti-dazzle function

Removing

- Remove roof module (front) ⇒ Electrical system; Rep. gr. 96 .
- Unplug connector of wire -4- from roof module (front).
- Use screwdriver to prise out interior mirror on left side between mounting plate -7- and mirror base -3-.
- Detach interior mirror.

Installing

- Prior to installation, check that locking pin -8- is engaged.
- Guide wire -4- through mirror base opening in frame for front roof module.
- Insert right side of mirror base -3-.
- Clip in mirror base trim -2- on right side.
- On left side, press mirror base trim -2- with mirror base -3- upwards until locking pin -8- engages.
- Plug in connector of wire -4- at roof module.
- Install roof module (front) ⇒ Electrical system; Rep. gr. 96 .

2 - Mirror base trim

3 - Mirror base

4 - Wire

❑ Interior mirror - roof module (front)

5 - Moulded headliner

6 - Frame for roof module (front)

7 - Base plate

8 - Locking pin

6.2 Checking operation of automatic anti-dazzle interior mirror

Note

- *Interior mirror is fitted.*
- *Ignition is switched on.*
- *Reverse gear is not engaged.*

6.2.1 Test sequence

– Cover or mask photo sensor -arrow- on housing side -1-.

– Aim beam of flashlight or similar at photosensor -arrow- on mirror side -2-.

- Interior mirror should darken quickly.

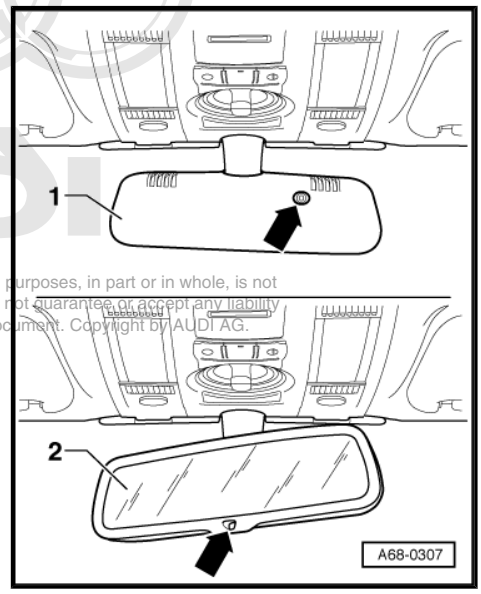

Protected by copyright. Copying for private or commercial purposes, in part or in whole, is not permitted unless authorised by AUDI AG. AUDI AG does not guarantee or accept any liability with respect to the correctness of information in this document. Copyright by AUDI AG.

69 – Passenger protection

1 Safety regulations and test methods for pyrotechnic, electrical and mechanical components of the restraint system

Overview

- ⇒ „1.1 General safety regulations“, page 95
- ⇒ „1.2 Storage, transportation and disposal of airbag, belt tensioner and battery isolator units (pyrotechnic components)“, page 96
- ⇒ „1.3 Additional safety regulations for side airbag“, page 97
- ⇒ „1.4 Additional safety regulations for curtain airbag“, page 97
- ⇒ „1.5 Safety regulations for crash sensors (pressure sensors) for front side airbag“, page 98
- ⇒ „1.6 Additional safety regulations for working on seat occupied sensor for front passenger's airbag deactivation - country-specific“, page 98
- ⇒ „1.7 Procedure for dealing with seat occupied sensor for front passenger's airbag deactivation following a crash - country-specific“, page 99
- ⇒ „1.8 Replacing pyrotechnic, electrical and mechanical components of restraint system following an accident“, page 99
- ⇒ „1.9 Checking airbag fastening elements following an accident“, page 101
- ⇒ „1.10 Accident not involving airbag triggering“, page 101
- ⇒ „1.11 Checking seat belts“, page 102
- ⇒ „1.12 Checking webbing“, page 102
- ⇒ „1.13 Checking automatic belt retractor (locking action) “, page 103
- ⇒ „1.14 Visual inspection of buckle “, page 104
- ⇒ „1.15 Functional test of buckle “, page 104
- ⇒ „1.16 Checking guide fittings and latch plate “, page 104
- ⇒ „1.17 Checking fastening elements and anchorage points following an accident“, page 104
- ⇒ „1.18 Checking child seat restraint function for additional child seats (not for driver's seat belt) - country-specific “, page 105
- ⇒ „1.19 Checking child seat anchors after an accident (Isofix, Top Tether)“, page 105
- ⇒ „1.20 Checking belt-fastened sensor for rear three-point seat belts with belt tensioner“, page 105

Reproduction prohibited. Copying for private or commercial purposes, in part or in whole, is not permitted unless authorised by AUDI AG. AUDI AG does not guarantee or accept any liability with respect to the correctness of information in this document. Copyright by AUDI AG.

1.1 General safety regulations

Note

Pyrotechnic components are:

- Airbag units
- Belt tensioners
- Belt force limiters (depending on equipment)
- Battery isolators (depending on equipment)

General

- Testing, fitting and servicing work are only to be performed by qualified personnel.
- There are no replacement intervals for airbag units.
- Never check using a test lamp, voltmeter or ohmmeter.
- Pyrotechnic components are only to be checked in situ using vehicle diagnostic, testing and information systems approved by the manufacturer.
- The battery earth strap must be disconnected with the ignition SWITCHED ON when working on pyrotechnic components and the airbag control unit -J234- . Then cover the negative terminal.
- A waiting time of 10 seconds is necessary after disconnecting the battery.
- The battery must be connected with the ignition SWITCHED ON. There must not be anyone in the vehicle when doing so. Exception: Vehicles with battery in passenger compartment. When doing so, keep away from the operating range of the airbags and seat belts.
- Heed the measures to be taken after connecting the battery ⇒ Electrical system; Rep. gr. 27 .
- Before handling pyrotechnic components of the restraint system (for example to unplug the connector), the person concerned must discharge static by touching earthed metal parts, for instance by briefly grasping hold of the door striker plate.
- Always wash hands after touching ignited pyrotechnic components of the restraint system.
- Pyrotechnic components are neither to be opened nor repaired; always use new parts (risk of injury).
- Pyrotechnic components which have been dropped onto a hard surface or reveal signs of damage are no longer to be fitted.
- Pyrotechnic components must be fitted immediately after removal from their transportation containers.
- Return the pyrotechnic component to its transportation container if work has to be interrupted.
- Pyrotechnic components are never to be left unattended.
- Other than the person performing the work, there should be no-one in the vehicle when connecting pyrotechnic components of the restraint system.
- Pyrotechnic components are never to be treated with grease, cleaning agents or the like.

Protected by copyright. Copying for private or commercial purposes, in part or in whole, is not permitted unless authorised by AUDI AG. AUDI AG does not guarantee or accept any liability with respect to the correctness of information in this document. Copyright by AUDI AG.

- Airbag units must be replaced if any contamination such as oils, greases, lacquers, paints or solvents has penetrated into the fabric.
- Pyrotechnic components are not to be exposed to temperatures in excess of 100 °C even for brief periods.

Special notes on driver's and front passenger's airbags

- Following removal, driver's and front passenger's airbag units are to be stored with the cushioned side facing upwards.

Always keep to the following sequence when replacing airbag units:

1 - Remove the old airbag unit and set it down with the cushioned side facing upwards.

2 - Remove the new airbag unit from the transportation container and set it down with the cushioned side facing upwards.

3 - Immediately place the old airbag unit in the transportation container.

4 - Install the new airbag unit in the vehicle.

Special notes for belt tensioners

- Belt tensioner units are to be handled with the utmost care on removal and installation. There is a high risk of damage and injury if belt tensioner units are not handled correctly.
- Always replace belt tensioner units showing signs of mechanical damage (dents, cracks).
- Never point the open end of a belt tensioner at another person.
- When connecting the belt tensioner unit, all mechanical parts (including those of the three-point seat belt) must be properly attached. If the belt tensioner unit cannot be connected due to a lack of space, the webbing must be completely retracted prior to connection. There is then no increased safety risk if the other safety precautions are observed. This primarily applies to disconnection of the battery and the discharging of static by the person performing the work before connecting the belt tensioner unit.
- Depending on the nature of the crash, the belt tensioner may have been ignited but NOT the belt force limiter. These items are to be treated as non-ignited components.

1.2 Storage, transportation and disposal of airbag, belt tensioner and battery isolator units (pyrotechnic components)

- Storage is subject to the applicable national legislation.
- Transportation is governed by national and international legal provisions which specify the details of packaging, marking, labelling and accompanying documentation.
- In line with national legislation, non-ignited pyrotechnic components are to be sent for proper recycling in the original packaging. Please ask your importer for details.
- Only fully ignited pyrotechnic components can be disposed of as commercial refuse.

Copyright by AUDI AG. Copyright. Copying for private or commercial purposes, in part or in whole, is not permitted unless authorised by AUDI AG. AUDI AG does not guarantee or accept any liability with respect to the correctness of information in this document. Copyright by AUDI AG.

WARNING

- *This does not apply to belt tensioners operating on the Wankel principle. These are to be treated in the same manner as non-ignited pyrotechnic components (for example airbags, seat belts, pyrotechnic battery isolators).*
- *Reason: It is not possible with the equipment available to workshops to check whether all the ignition stages of Wankel-type belt tensioners have been ignited.*

1.3 Additional safety regulations for side airbag

Protected by copyright. Copying for private or commercial purposes, in part or in whole, is not permitted unless authorised by AUDI AG. AUDI AG does not guarantee or accept any liability with respect to the correctness of information in this document. Copyright by AUDI AG.

- It is advisable to use genuine seat covers.
- Use is never to be made of seat covers or loose covers not specially approved for use on Audi seats with side airbags.
- The backrest foam fill is not to be cut away in the area of the side airbag.
- On installation, the seam in the area of the side airbag must be straight.
- All upholstery clips (metal and plastic clips) must be replaced.
- It is advisable to use genuine clips only.
- On installation, all clips must be fitted in the same positions as on removal.
- If the cover is damaged (tears, burn marks, etc.) in the area of the side airbag, it is always to be replaced for safety reasons, as otherwise the side airbag will not inflate properly.
- The backrest cover in the area of the side airbag is never to be repaired (on account of special thread and precisely defined seam).
- Always replace the backrest padding after the side airbags have been triggered.
- All damaged components must be replaced after an accident. The airbag unit can be re-used if there are no signs of damage.
- If side airbag units are replaced, remove the airbag number sticker from the new unit and affix it over the old one on the seat pan.
- Never pierce the cover in the area of the airbag and the seat occupied sensor, front passenger side -G128- with an upholstery needle or similar pointed objects.

1.4 Additional safety regulations for curtain airbag

- Prior to installation, always visually inspect the trim for damage.
- Trim repairs (upper A-pillar, B, C and D-pillar trim) are not permitted.
- On installation, make sure the trim is firmly attached.
- When performing repairs behind the curtain airbag always remove the entire module.
- Curtain airbag modules are to be handled with the utmost care on removal and installation to avoid possible damage.

- Following removal, place curtain airbag modules in the transportation container or set down on a clean, flat surface on a sheet.
- Following body repairs in the curtain airbag area, the body must be checked for weld spatter, deformation and abrasion (compare to opposite side).
- Always keep a firm hold on the gas generator while ever it is NOT bolted on (during transportation, removal and installation etc.).
- Never twist, wring, knot, throw, pull, hang up, squash, squeeze, pinch or trap curtain airbag modules.
- Folding is acceptable provided that this does not cause any damage (particularly to the protective sheath).

1.5 Safety regulations for crash sensors (pressure sensors) for front side airbag

The side airbag crash sensors react to changes in pressure and are thus to be treated with the utmost care. Heed the following:

- Always pay attention to the correct installation position: Only install at the envisaged fitting location in the door.
- Protect crash sensors against impact: Crash sensors which have been dropped are not to be re-used. Remove the crash sensor for bodywork operations at the door.
- The crash sensor is matched to the volume of air inside the door: Operation of the crash sensor will be impaired by deformation of the door which reduces the air space in the door.
- Avoid major contamination of the crash sensor: Do not use compressed air in the vicinity of the crash sensor. Protect the crash sensor against filings or drilling swarf (e.g. on service installation of door loudspeakers). Do not use cavity sealant or spray oil in the area of the crash sensor.
- Protection against high/low temperatures: Avoid exposure to heat, for instance when painting or performing other bodywork operations. The crash sensors are never to be exposed to temperatures of less than –40 °C (e.g. in non-air conditioned aircraft cargo holds).
- Protect the crash sensor against damp both in storage and during installation work.

The crash sensor will only function properly if there is a reliable seal at the door following assembly. Heed the following:

- Ensure correct fitting of all components (e.g. cover panel, loudspeaker, door trim).
- The door trim retaining clips provide a seal for the system. Replace the retaining clips if necessary.

1.6 Additional safety regulations for working on seat occupied sensor for front passenger's airbag deactivation - country-specific

- Following repair work on the front passenger's seat involving »disengagement« of the seat and/or backrest cover, basic setting of the seat occupied recognition control unit must always be performed ⇒ Vehicle diagnostic tester
- The seat occupied sensor mat is not to be kinked.

Reproduction or copying for private or commercial purposes, in part or in whole, is not permitted unless authorised by AUDI AG. AUDI AG does not guarantee or accept any liability with respect to the correctness of information in this document. Copyright by AUDI AG.

- The mat must be replaced if no longer properly sealed (service kit).
- The seat occupied sensor pressure hose is not to be kinked.
- Take care not to drop components of the seat occupied sensor (service kit) onto a hard surface, avoid contact with grease and make sure there is no risk of damage caused by sharp objects.
- The mat, the pad and all covers must be laid such that there are no creases.
- When fitting, pay attention to the correct installation position of the seat padding and seat cover.
- Replace all upholstery staples/clips and ensure correct positioning on the seat.
- With the airbags 8.R and 9.*, basic setting of the system is only possible at temperatures between 0 °C and +40 °C (for the airbag 10.* only between 5° and 35°C).
- Make sure there are no objects lying on the seat prior to and during basic setting.
- The use of loose seat covers - such as cushions - impairs operation of the seat occupied sensor and thus functioning of the airbag system.

1.7 Procedure for dealing with seat occupied sensor for front passenger's airbag deactivation following a crash - country-specific

Protected by copyright. Copying for private or commercial purposes, in part or in whole, is not permitted unless authorised by AUDI AG. AUDI AG does not guarantee or accept any liability with respect to the correctness of information in this document. Copyright by AUDI AG.

- Whenever the airbag or front passenger's belt tensioner has been triggered, basic setting of the seat occupied recognition control unit must always be performed ⇒ Vehicle diagnostic tester.
- If the seat rail and/or seat pan are/is replaced after an accident on account of deformation, the seat occupied sensor must be replaced with the „seat occupied sensor service kit“. Basic setting of the seat occupied sensor control unit must then be performed ⇒ Vehicle diagnostic tester.

1.8 Replacing pyrotechnic, electrical and mechanical components of restraint system following an accident

Special tools and workshop equipment required

- Vehicle diagnostic tester

Note

- *The airbag control unit can be used with airbag generation 8.* »not 8.R« for up to two side airbag and/or belt tensioner triggering operations.*
- *The airbag control unit can be used with airbag generation 9.*, 10.* and 8.R for up to two side airbag, driver's airbag, front passenger's airbag and/or belt tensioner triggering operations.*
- *The fault display „Control unit defective“ appears after triggering for the third time.*

The airbag control unit must be replaced:

- In the event of driver's/front passenger's airbag triggering „however not with airbag generation 9.*, 10.* and 8.R“ ⇒ page 99
- After three side airbag, driver's airbag, front passenger's airbag or belt tensioner triggering operations
- If the housing is damaged
- In the event of tunnel deformation within a 200 mm radius of the control unit

Always replace the following:

- All airbag units triggered
- The battery isolation igniter -N253-

Additionally, if the front passenger's airbag has been triggered:

- Dash panel
- Deformed supports for front passenger's module (must not be bent back into shape)
- All front airbag sensors at front end
- All other lateral acceleration sensors in the event of deformation of the anchorage points in the area of the sensors

Additionally, if the driver's airbag has been triggered:

- Return ring with slip ring
- All front airbag sensors at front end
- All other lateral acceleration sensors in the event of deformation of the anchorage points in the area of the sensors

Additionally, if the side airbag has been triggered:

- Pressure sensors on the side on which triggering has taken place
- Lateral acceleration sensors on the side on which triggering has taken place
- Cover
- Padding
- Folding rear seat backrest: Side padding (if provided)
- All other lateral acceleration sensors in the event of deformation of the anchorage points in the area of the sensors

Additionally:

- All automatic belt retractors with triggered belt tensioners
- All automatic belt retractors with triggered belt force limiters (depending on equipment)
- Buckles for all automatic belt retractors with triggered belt tensioners
- Belt height adjusters (mechanical and electrical) for all automatic belt retractors with triggered belt tensioners

Protected by copyright. Copying for private or commercial purposes, in part or in whole, is not permitted unless authorised by AUDI AG. AUDI AG does not guarantee or accept any liability with respect to the correctness of information in this document. Copyright by AUDI AG.

– If belt tensioner and/or belt force limiter triggering is suspected, connect up a vehicle diagnostic tester .

– Check whether a crash entry has been made in the airbag control unit in the »Guided fault-finding« routine under „15 - Airbag“.

– Check whether the fault „Resistance too high“ has been entered simultaneously for the belt tensioner and/or belt force limiter. Triggered belt tensioners and/or belt force limiters must satisfy both conditions. „Prerequisite: Airbag control unit not yet replaced“.

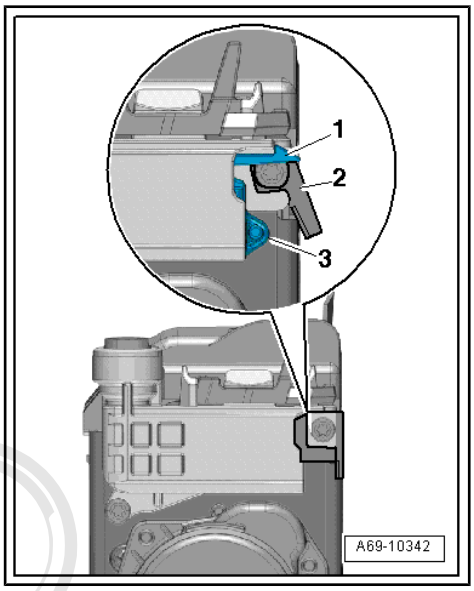

Note

- *The fault „Resistance too high“ may also have been entered in the case of an open circuit in the wiring. There is then not normally any crash entry.*
- *Depending on the crash situation, the belt tensioner may have been triggered but »NOT« the belt force limiter. The disposal procedure for pyrotechnic components is then to be heeded* *⇒ page 96* *.*
- *Also heed: Section on checking of seat belts* *⇒ page 102* *.*
- *Triggered belt force limiters can be identified from the following:*
- *Pin -1- and lug -3- ejected from housing of belt force limiter at automatic belt retractor.*
- *Tab -2- no longer vertical but facing outwards at an angle.*

– If parts of the belt system are removed on account of an accident, the belt system bolts are to be replaced.

– The following must also be replaced if necessary (visual inspection): All damaged components

– After replacing airbag units or the control unit, affix labels (tear-off portion only) to the registration card and forward the registration card to the appropriate Regional Sales Centre or importer for recording purposes.

Protected by copyright. Copying for private or commercial purposes, in part or in whole, is not permitted unless authorised by AUDI AG. AUDI AG does not guarantee or accept any liability with respect to the correctness of information in this document. Copyright by AUDI AG.

1.9 Checking airbag fastening elements following an accident

Always replace all damaged fastening elements. Bending back into shape or »forcing« is not permitted.

The following components must be checked after triggering of the corresponding airbag.

If the front passenger's airbag has been triggered:

- Dash panel central tube; stress-free fitting of the front passenger's airbag supports and the front passenger's airbag unit must be possible. Otherwise the central tube is also to be replaced.
- Check the glove compartment for damage. If damaged, the glove compartment must be replaced.

If the driver's airbag has been triggered:

- Steering wheel: Remove the steering wheel and set it down on the rim on a flat surface. The full area of the rim must lie flat. Otherwise the steering wheel is to be replaced.
- Check the steering wheel for smoke marks. Replace the steering wheel if such marks are found.

1.10 Accident not involving airbag triggering

- Pyrotechnic component replacement is not necessary if the airbag warning lamp -K75- does not indicate a fault. Seat belts are to be checked separately.

1.11 Checking seat belts

WARNING

The seat belt system is always to be subjected to systematic checking after an accident. If the test items reveal damage, customers are to be made aware of the need for belt replacement.

Test items

- Checking webbing ⇒ page 102
- Checking automatic belt retractor (locking action) ⇒ page 103
- Visual inspection of buckle ⇒ page 104
- Functional test of buckle ⇒ page 104
- Checking guide fittings and latch plate ⇒ page 104
- Checking fastening elements and anchorage points ⇒ page 104
- Checking child seat restraint function for additional child seats (not for driver's seat belt) - country-specific ⇒ page 105

Protected by copyright. Copying for private or commercial purposes, in part or in whole, is not permitted unless authorised by AUDI AG. AUDI AG does not guarantee or accept any liability with respect to the correctness of information in this document. Copyright by AUDI AG.

Caution

If customers refuse to have damaged seat belts replaced, an appropriate note to this effect is to be made in the Service booklet.

1.12 Checking webbing

Sequence of operations

– Pull the webbing as far as it will go out of the automatic belt retractor or lap belt adjuster.

– Check the webbing for dirt and, if necessary, wash with mild soap solution ⇒ Owner's manual .

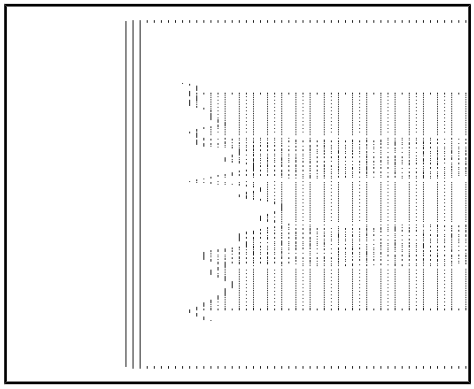

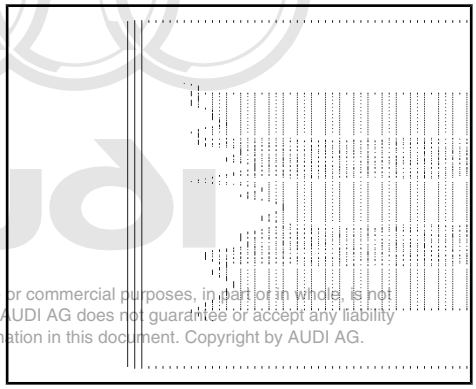

Protected by copyright. Copying for private or commercial purposes, in part or in whole, is not permitted unless authorised by AUDI AG. AUDI AG does not guarantee or accept any liability with respect to the correctness of information in this document. Copyright by AUDI AG.

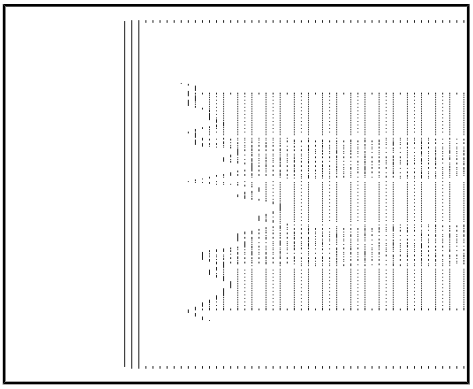

- If either of the following illustrated examples of damage (1 and 2) is found on a crash vehicle, replace the seat belt complete with the buckle.
- If damage as illustrated under points 1, 2 or 3 is determined on a vehicle which has not been involved in an accident, it is sufficient to replace the damaged belt only.
- 1 - Webbing cut, torn or chafed
- 2 - Frayed fabric at edge of belt
- 3 - Burn marks caused by cigarettes or the like

1.13 Checking automatic belt retractor (locking action)

The automatic belt retractor has two locking functions.

♦ The first locking function is triggered by pulling the belt quickly out of the automatic belt retractor (accelerated belt unwinding).

Check 1

– Tug the webbing firmly to pull it out of the automatic belt retractor.

- No locking effect - replace seat belt complete with buckle.
- In the event of problems when pulling out or retracting the belt, start by checking whether the automatic belt retractor has changed position.
- The second locking function is triggered by altering vehicle motion (vehicle-dependent locking function).

Check 2

> ⚠ WARNING
>
> *For safety reasons, the test drive should be performed on a road with no traffic so as not to endanger other road users.*

– Fasten seat belt.

– Accelerate the vehicle to 20 km/h and then press the foot brake to implement emergency braking.

- If the belt is not locked by the locking mechanism on braking, replace the seat belt complete with the buckle.

1.14 Visual inspection of buckle

– Examine the buckle for cracks and flaking.

• If damage is found, replace the seat belt complete with the buckle.

1.15 Functional test of buckle

Checking buckle

– Insert the latch plate in the buckle until it is heard to engage. Pull firmly on the webbing to check whether the locking mechanism has engaged.

• If the latch plate fails to engage properly in the buckle even once in the course of a minimum of 5 tests, replace the seat belt complete with the buckle.

Checking release function

– Release the seat belt by pressing with a finger on the buckle button. If the webbing is slack, the latch plate must be released automatically from the buckle.

• Carry out the test at least 5 times. If the latch plate is not released even just once, replace the seat belt complete with the buckle.

WARNING

Never use lubricants to eliminate noise or if the buckle buttons are stiff.

Protected by copyright. Copying for private or commercial purposes, in part or in whole, is not permitted unless authorised by AUDI AG. AUDI AG does not guarantee or accept any liability with respect to the correctness of information in this document. Copyright by AUDI AG.

1.16 Checking guide fittings and latch plate

After being subjected to load (seat belt fastened in an accident) plastic-covered fittings of the belt system exhibit fine parallel scoring marks (on the other hand, wear caused by frequent use can be seen from uniformly smooth patches).

– Examine for deformation, flaking and cracks in the plastic.

• If scoring and/or damage is found, replace the seat belt complete with the buckle.

1.17 Checking fastening elements and anchorage points following an accident

♦ Latch plate deformed (strained)

♦ No height adjustment function

♦ Anchorage points (seat, pillar, vehicle floor) deformed or thread damaged

• If component damage is found, replace the seat belt complete with the buckle.

• If parts of the belt system are removed on account of an accident, the belt system bolts are to be replaced.

• Replace anchorage points.

Note

In the event of damage not resulting from an accident (for example wear) only the corresponding damaged part is to be replaced.

1.18 Checking child seat restraint function for additional child seats (not for driver's seat belt) - country-specific

The complete belt assembly (including the side trim) must be fitted for checking this function.

Activation of restraint function

- Pull out the webbing as far as possible.

Correct function

- The belt should be heard to retract.
- If retraction is stopped, the belt can no longer be pulled out again.

Deactivation

- Allow the belt to retract as far as the last approx. 100 mm.
- The restraint function must be deactivated at the latest when the belt has been retracted as far as the last 100 mm. The belt then re-assumes its normal function.

1.19 Checking child seat anchors after an accident (Isofix, Top Tether)

Test items

- After an accident, the child seat anchors are to be checked for damage and deformation.
- Child seat anchors welded or bolted to the body or seats/ backrests are not to be repaired or straightened.
- Child seat anchors bolted to the body or seats/backrests must be replaced in the event of damage or deformation.
- The bolts for securing the child seat anchors are to be replaced if the holder is damaged.

1.20 Checking belt-fastened sensor for rear three-point seat belts with belt tensioner

– Connect up a vehicle diagnostic tester and select the vehicle system „15 - Airbag“ from the list. The ignition must be switched on when doing so.

– Read measured value block, display group 004.

Protected by copyright. Copying for private or commercial purposes, in part or in whole, is not permitted unless authorised by AUDI AG. AUDI AG does not guarantee or accept any liability with respect to the correctness of information in this document. Copyright by AUDI AG.

Belt fully retracted: Display on vehicle diagnostic tester - no -

Latch plate engaged in buckle and belt additionally extended by dimension - L -: Display on vehicle diagnostic tester - yes -

- Extension dimension - L - is 350 mm for both left and right belt.
- Extension dimension - L - is 350 mm for centre belt.

Then pull out the belt as far as it will go. When doing so, the display on the vehicle diagnostic tester must remain on - yes -.

Then retract the belt as far as dimension - L - without releasing the latch plate, the display on the vehicle diagnostic tester must remain on - yes -.

Release the latch plate and slowly retract the webbing. At the latest on reaching a residual length of 100 mm, the display must switch from - yes - to - no -.

Belt fully retracted: Display on vehicle diagnostic tester - no -

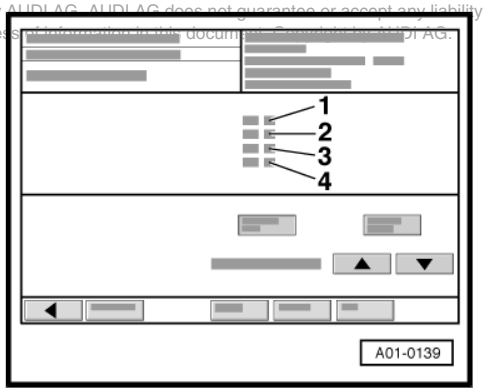

2 Seat belts

2.1 Seat belt anchorage points (block diagram)

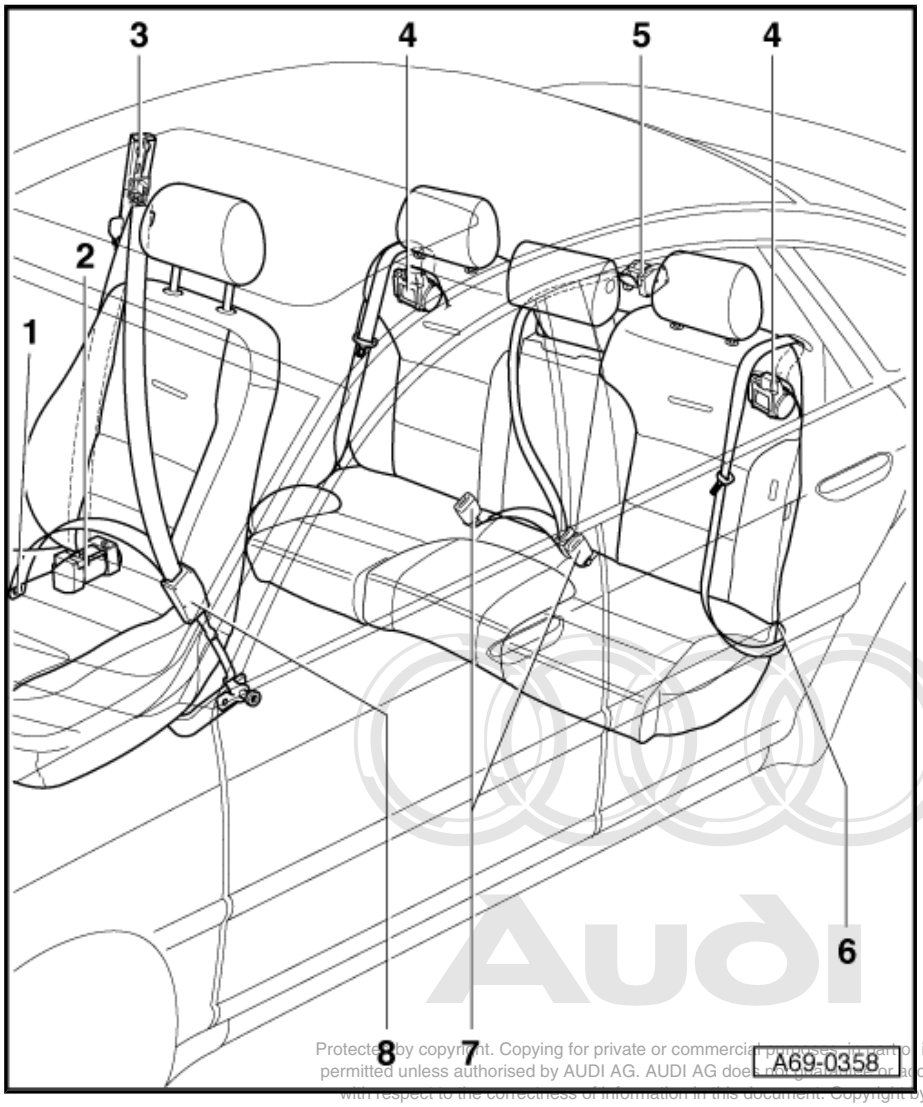

Protected by copyright. Copying for private or commercial purposes, in part or in whole, is not permitted unless authorised by AUDI AG. AUDI AG does not guarantee or accept any liability with respect to the correctness of information in this document. Copyright by AUDI AG.

1 - Outer floor panel anchorage point

- ❑ Removing, Page ⇒ page 107

2 - Three-point seat belt

- ❑ Removing, Page ⇒ page 107

3 - Belt height adjuster

- ❑ Removing, Page ⇒ page 109
- ❑ Always replace belt height adjuster after belt tensioner triggering with belt fastened

4 - Rear three-point seat belt

- ❑ Removing, Page ⇒ page 109

5 - Third rear three-point seat belt

- ❑ Removing, Page ⇒ page 111

6 - Anchorage point: rear outer floor panel

- ❑ Removing with fixed rear seat backrest, Page ⇒ page 113
- ❑ Removing with electrically operated individual rear seats ⇒ page 114

7 - Centre floor panel anchorage points (buckle)

- ❑ Removing with fixed rear seat bench, Page ⇒ page 114
- ❑ Removing with electrically operated individual rear seats ⇒ page 116
- ❑ Always replace belt buckle after belt tensioner triggering with belt fastened

8 - Buckle anchorage point

- ❑ Replacing ⇒ page 116
- ❑ Replacing with seat occupied sensor for front passenger's airbag deactivation »Country-specific«, front passenger side only ⇒ page 116
- ❑ Always replace belt buckle after belt tensioner triggering with belt fastened

2.2 Outer floor panel anchorage point

2.2.1 Removing and installing belt end fitting

1 - Front seat

2 - Belt end fitting

♦ Removing

– Move the front seat -1- as far upwards and to the rear as possible.
– Use a screwdriver to prise out the holder -3- and slide out the belt end fitting -2- in arrow direction.

♦ Installing

– Turn the webbing through 180°.
– Position the belt end fitting -2- over the large opening.
– Engage the belt end fitting -2- in direction opposite to arrow.

3 - Holder

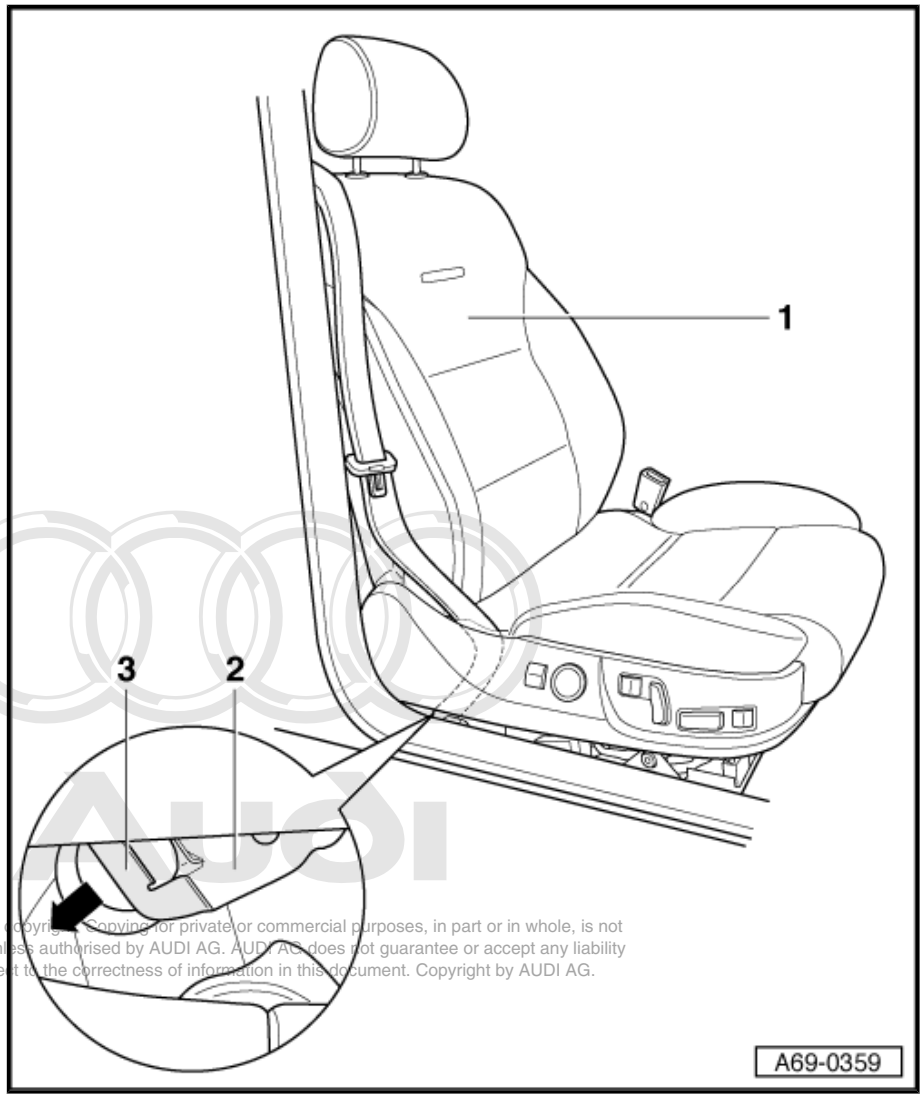

Protected by copyright. Copying for private or commercial purposes, in part or in whole, is not permitted unless authorised by AUDI AG. AUDI AG does not guarantee or accept any liability with respect to the correctness of information in this document. Copyright by AUDI AG.

2.3 Removing and installing three-point seat belt

Special tools and workshop equipment required

♦ Torque wrench -V.A.G 1332-

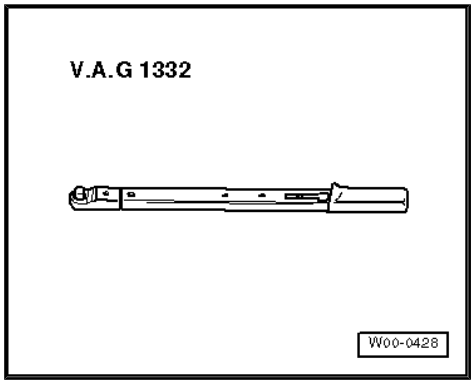

1 - Guide fitting

2 - Nut

3 - Upper B-pillar trim

4 - Belt

5 - Outer floor panel anchorage point

6 - Belt reel/belt tensioner

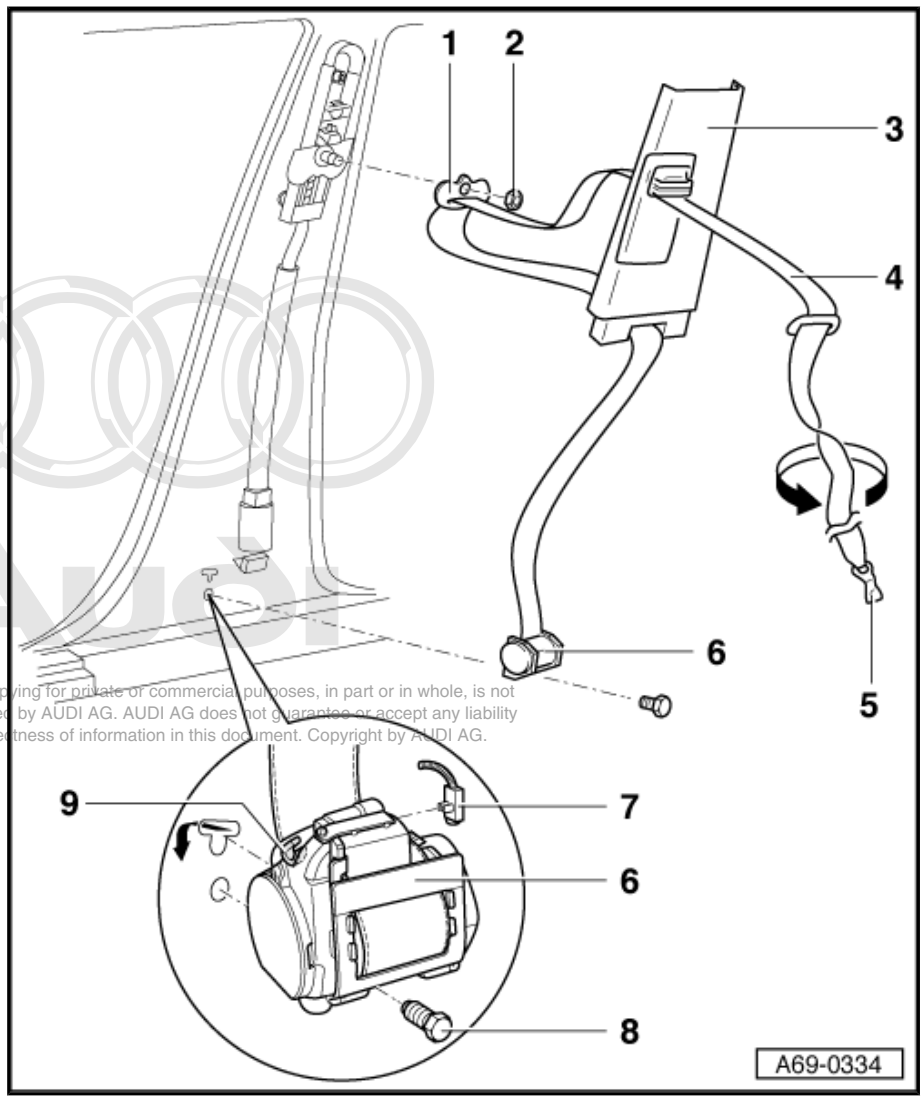

♦ Removing

> ⚠ **WARNING**
>
> *Keed the safety regulations for pyrotechnic components ⇒ page 94 .*
>
> *Keed the disposal regulations for pyrotechnic components ⇒ page 96 .*

– With the ignition switched on, disconnect the battery earth wire ⇒ Electrical system; Rep. gr. 27 .
– Remove the outer floor panel anchorage point ⇒ page 107 .
– Remove the lower B-pillar trim ⇒ page 256 .
– Remove the upper B-pillar trim ⇒ page 254 .
– Unscrew the nut -2-.
– Detach the guide fitting -1-.
– Use a screwdriver to unfasten the locking element at the connector -7- and unplug the connector.
– Unscrew the bolt -8-.
– Disengage the belt reel -6-.

♦ Installing

♦

– Engage the locating pin on the back of the belt reel -6- in arrow direction.

– Screw in the bolt -8-.

– Make sure the connector -7- engages properly.

Protected by copyright. Copying for private or commercial purposes, in part or in whole, is not permitted unless authorised by AUDI AG. AUDI AG does not guarantee or accept any liability with respect to the correctness of information in this document. Copyright by AUDI AG.

– Press the cable of the connector -7- into the clip -9-.

– Screw on the guide fitting -1- with the bolt -2-. The guide fitting must settle automatically in usage direction.

– Continue installing the three-point seat belt in the reverse order of removal.

– Make sure the three-point seat belt is not impeded by cables, wires, insulation, etc.

> ⚠ **WARNING**
> *There must not be anyone in the vehicle when connecting the battery.*

– With the ignition switched on, connect the battery earth wire ⇒ Electrical system; Rep. gr. 27 .

7 - Connector

8 - Bolt

❑ Tightening torque 55 Nm.

9 - Clip

2.4 Removing and installing belt height adjuster

♦ Removing

– Remove the lower B-pillar trim ⇒ page 256 .

– Remove the upper B-pillar trim ⇒ page 254 .

– Remove the three-point seat belt ⇒ page 107 and ⇒ page 176 .

– Unplug the connector -4-.

– Unscrew the bolts -3- (2x).

– Unscrew the bolt -2-.

– Lift out the belt height adjuster -1-.

♦ Installing

– Install the belt height adjuster -1- in the reverse order of removal.

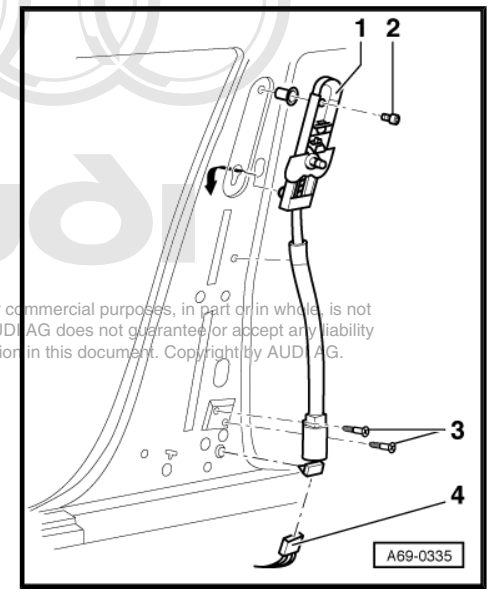

Protected by copyright. Copying for private or commercial purposes, in part or in whole, is not permitted unless authorised by AUDI AG. AUDI AG does not guarantee or accept any liability with respect to the correctness of information in this document. Copyright by AUDI AG.

2.5 Removing and installing rear three-point seat belt

Special tools and workshop equipment required

♦ Torque wrench -V.A.G 1332-

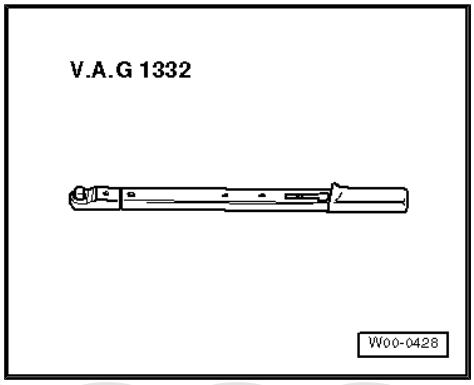

1 - Webbing

2 - Webbing guide trim

3 - Rear shelf

4 - Opening in webbing guide trim

5 - Belt tensioner connector

6 - Clip

7 - Cable

8 - Belt reel/belt tensioner

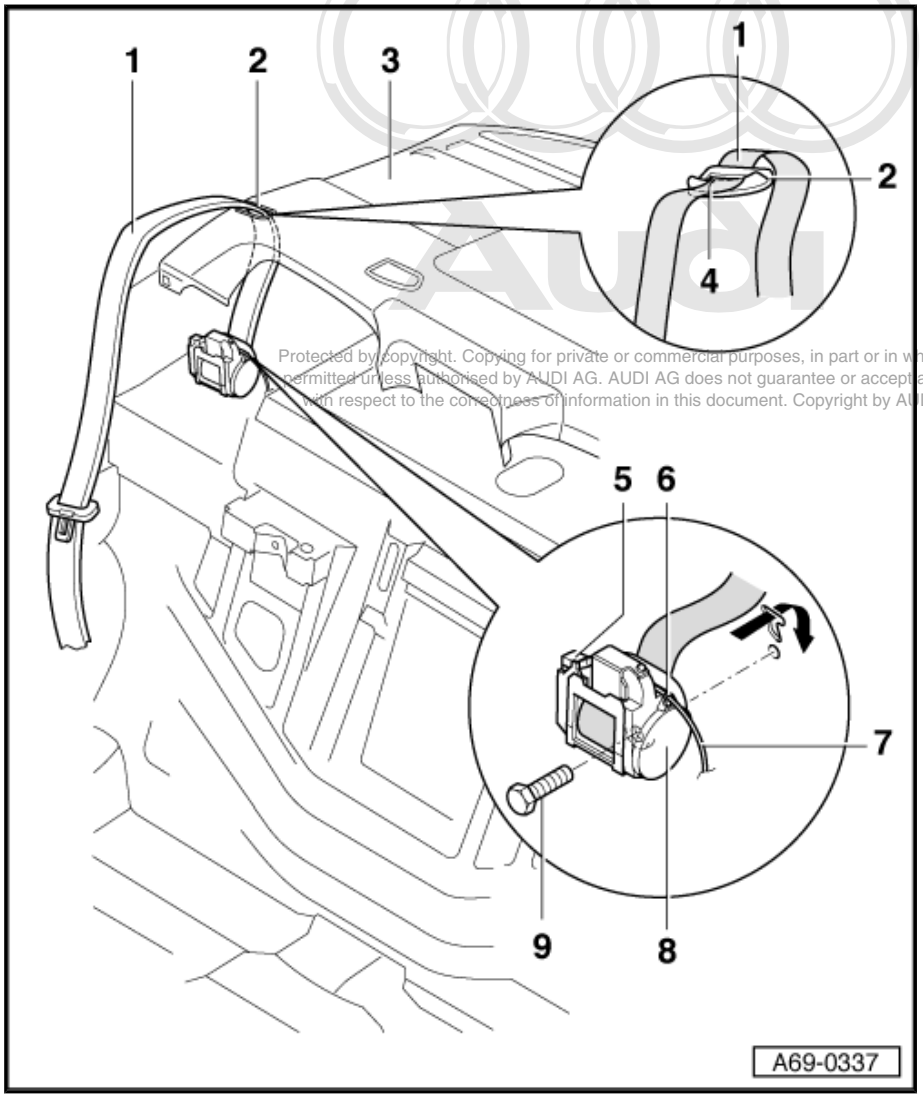

Protected by copyright. Copying for private or commercial purposes, in part or in whole, is not permitted unless authorised by AUDI AG. AUDI AG does not guarantee or accept any liability with respect to the correctness of information in this document. Copyright by AUDI AG.

♦ Removing

> ⚠ WARNING
>
> *Heed the safety regulations for pyrotechnic components ⇒ page 94 .*
>
> *Heed the disposal regulations for pyrotechnic components ⇒ page 96 .*

– With the ignition switched on, disconnect the battery earth wire ⇒ Electrical system; Rep. gr. 27 .
– Remove the rear seat bench ⇒ page 333 .
– Remove the rear seat backrest ⇒ page 334 .
– Remove the rear outer floor panel anchorage point ⇒ page 113 .
– Unscrew the bolt -9-.
– Unplug the belt tensioner connector -5-.
– Disengage the belt reel -8-.

♦ Installing

– Engage the belt reel -8- in arrow direction.

– Make sure the cable -7- is secured at the clip -6-.

– Continue installing the belt reel -8- in the reverse order of removal.

WARNING

There must not be anyone in the vehicle when connecting the battery.

– With the ignition switched on, connect the battery earth wire ⇒ Electrical system; Rep. gr. 27 .

– Check the belt-fastened sensor ⇒ page 105 .

9 - Bolt

❑ Tightening torque 55 Nm.

2.6 Removing and installing third rear three-point seat belt (fixed rear seat backrest)

Special tools and workshop equipment required

Protected by copyright. Copying for private or commercial purposes, in part or in whole, is not permitted unless authorised by AUDI AG. AUDI AG does not guarantee or accept any liability with respect to the correctness of information in this document. Copyright by AUDI AG.

♦ Torque wrench -V.A.G 1332-

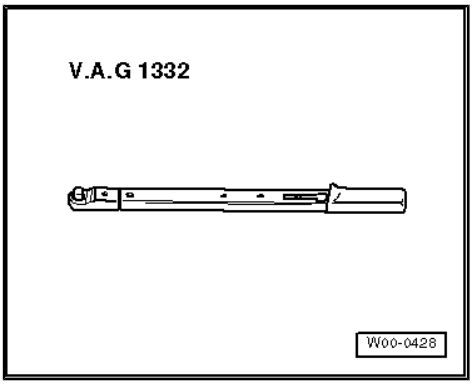

1 - Third rear three-point seat belt

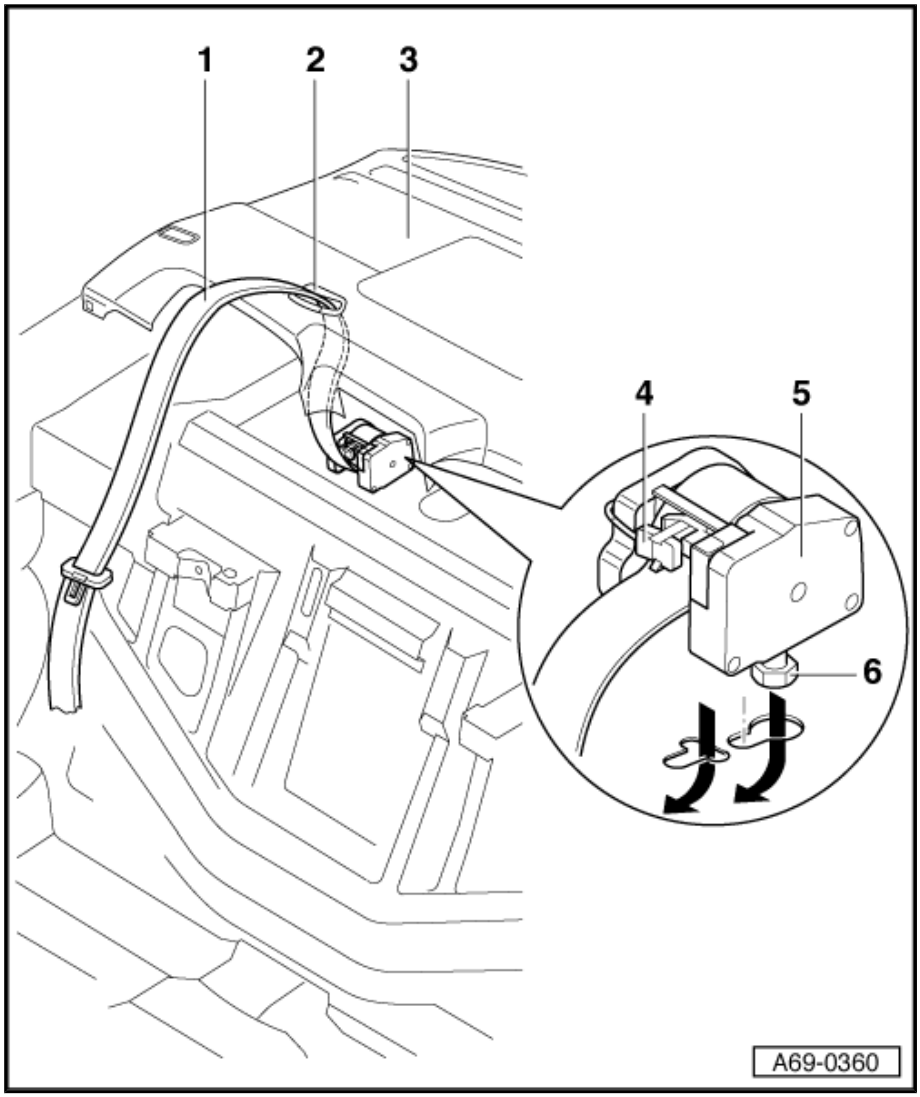

♦ Removing

> ⚠ **WARNING**
> *Keed the safety regulations for pyrotechnic components ⇒ page 94 .*
>
> *Keed the disposal regulations for pyrotechnic components ⇒ page 96 .*

– With the ignition switched on, disconnect the battery earth wire ⇒ Electrical system; Rep. gr. 27 .
– Remove the rear seat bench ⇒ page 333 .
– Remove the rear seat backrest ⇒ page 334 .
– Remove the rear shelf ⇒ page 262 .
– Remove the rear centre floor panel anchorage point ⇒ page 114 .
– Unscrew the bolt -6-.
– Unplug the belt tensioner connector -4-.
– Disengage the belt reel -5-.

♦ Installing

– Engage the belt reel -5- in arrow direction.

– Continue installing the third rear three-point seat belt -1- in the reverse order of removal.

> ⚠ **WARNING**
> *There must not be anyone in the vehicle when connecting the battery.*

– With the ignition switched on, connect the battery earth wire ⇒ Electrical system; Rep. gr. 27 .

– Check the belt-fastened sensor ⇒ page 105 .

2 - Webbing guide trim

3 - Rear shelf

4 - Belt tensioner connector

by copyright. Copying for private or commercial purposes, in part or in whole, is not permitted unless authorised by AUDI AG. AUDI AG does not guarantee or accept any liability respect to the correctness of information in this document. Copyright by AUDI AG.

5 - Belt reel/belt tensioner

6 - Bolt

❑ Tightening torque 55 Nm.

2.7 Removing and installing rear outer floor panel anchorage point

Special tools and workshop equipment required

- ♦ Torque wrench -V.A.G 1332-

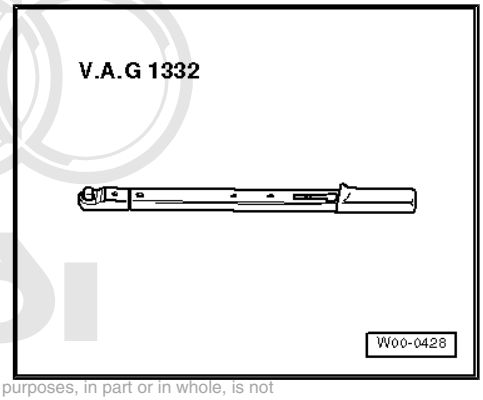

Protected by copyright. Copying for private or commercial purposes, in part or in whole, is not permitted unless authorised by AUDI AG. AUDI AG does not guarantee or accept any liability with respect to the correctness of information in this document. Copyright by AUDI AG.

- Remove the rear seat bench ⇒ page 333 .
- Remove the rear seat backrest ⇒ page 176 and ⇒ page 334 .
- Unscrew the bolt -2-.
- Disengage the anchorage point -1-.
- ♦ Installing

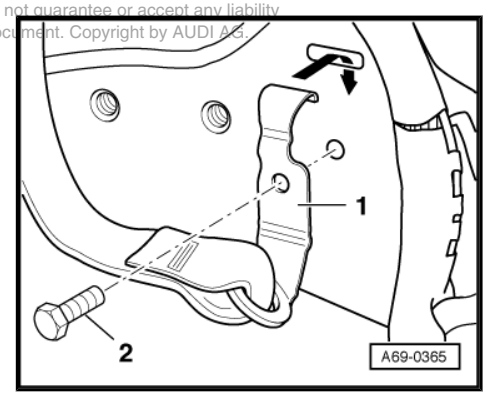

- Engage the anchorage point -1- in arrow direction.
- Screw in the bolt -2-.
- ♦ Tightening torque 55 Nm.

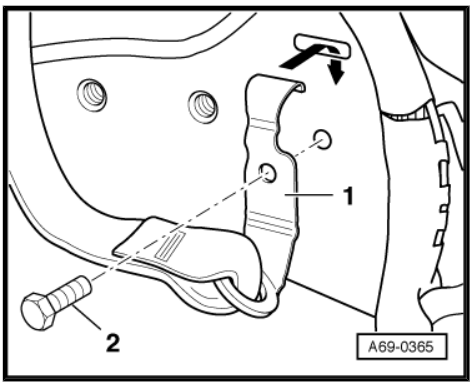

2.8 Removing and installing rear outer floor panel anchorage point with electrically operated individual seats

– Remove the seat pan ⇒ page 342 .
– Thread the webbing -5- out of the webbing holder -4-.
– Disengage the webbing holder -4- at the lug -3-.
– Pull the webbing holder -4- forwards in arrow direction.
– Unscrew the nut -2-. Tightening torque 55 Nm.
– Take out the seat belt retainer -1-.

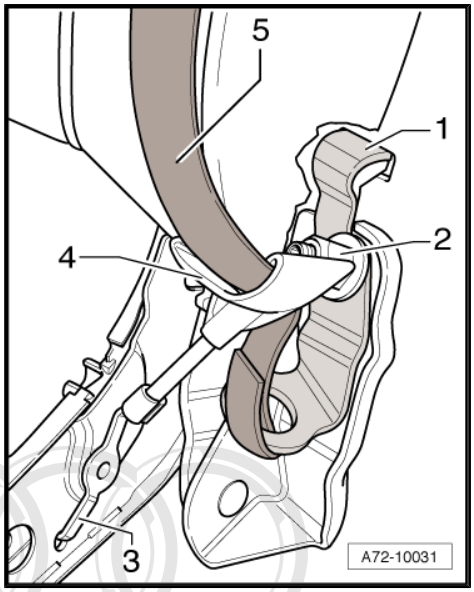

2.9 Centre floor panel anchorage points

Special tools and workshop equipment required

♦ Torque wrench -V.A.G 1332-

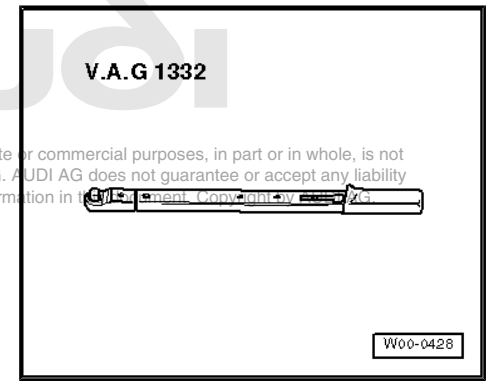

Protected by copyright. Copying for private or commercial purposes, in part or in whole, is not permitted unless authorised by AUDI AG. AUDI AG does not guarantee or accept any liability with respect to the correctness of information in this document. Copyright by AUDI AG

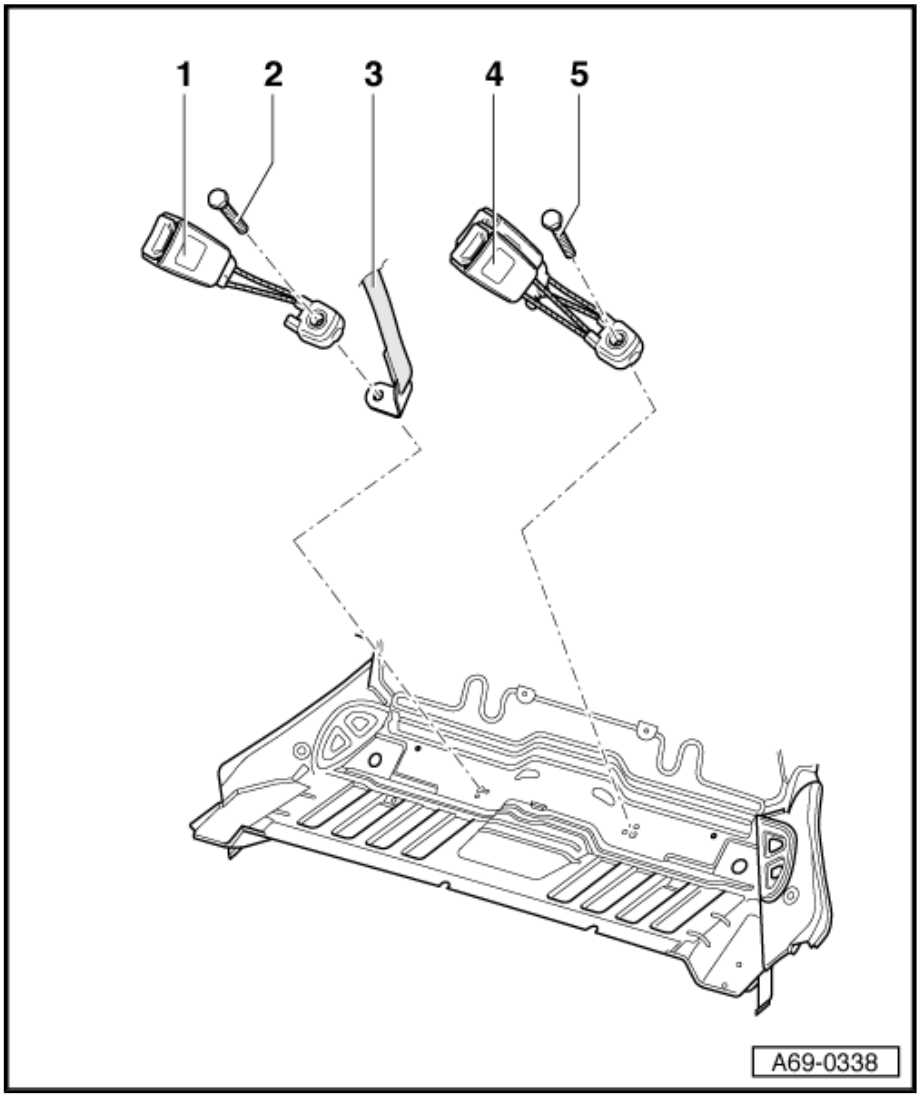

1 - Right belt buckle

❑ Always replace belt buckle after belt tensioner triggering with belt fastened

♦ Removing

– Remove the rear seat bench ⇒ page 333 .
– Unscrew the bolt -2-.
– Detach the buckle -1- and the lap belt -3-.

♦ Installing

– Always use genuine bolts.

– Make sure the buckle and the lap belt anchorage point engage in the locating studs.

2 - Bolt

❑ Tightening torque 55 Nm.

3 - Lap belt with anchorage point

4 - Left buckles and lap belt

❑ Always replace belt buckle after belt tensioner triggering with belt fastened

♦ Removing

– Remove the rear seat bench ⇒ page 333 .
– Unscrew the bolt -5-.
– Detach the buckles -4-.

♦ Installing

– Always use genuine bolts.

– Make sure the buckles engage in the locating studs.

5 - Bolt

❑ Tightening torque 55 Nm.

Protected by copyright. Copying for private or commercial purposes, in part or in whole, is not permitted unless authorised by AUDI AG. AUDI AG does not guarantee or accept any liability with respect to the correctness of information in this document. Copyright by AUDI AG.

2.10 Removing and installing centre floor panel anchorage points (buckle) with electrically operated individual seats

– Vehicles with no centre console extension: Remove the centre section ⇒ page 341 .

– Vehicles with centre console extension: Remove the long centre console ⇒ page 59 .

– Unscrew the bolt -2-. 35 Nm.

– Detach the belt buckle -1-.

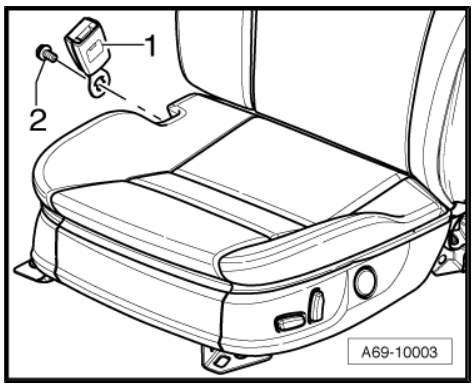

2.11 Replacing belt buckle

Special tools and workshop equipment required

♦ Torque wrench -V.A.G 1331-

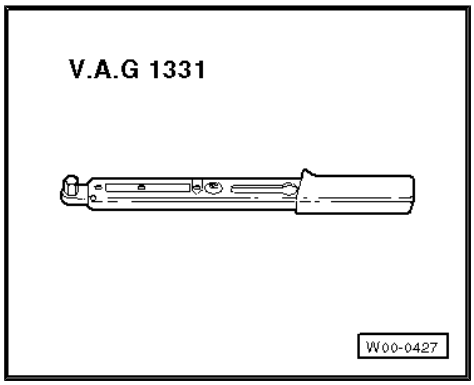

Removing:

– Remove the seat ⇒ page 282 .

– Unfasten the cable -4- at the clip -3-.

– Unfasten the cable tie -2-.

– Unplug the connector -5-.

– Unscrew the bolt -6-.

– Detach the belt buckle -1-.

Installing:

♦ Install in reverse order. Pay attention to the following when doing so.

– Replace the buckle attachment bolt.

Tightening torque:

Component	Nm
Bolt for buckle attachment	34

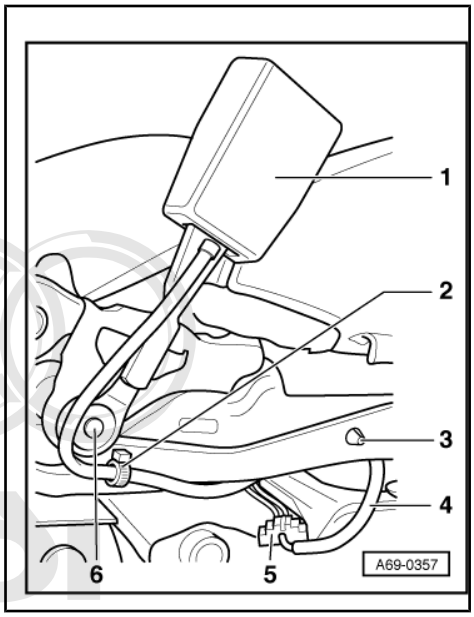

Protected by copyright. Copying for private or commercial purposes, in part or in whole, is not permitted unless authorised by AUDI AG. AUDI AG does not guarantee or accept any liability with respect to the correctness of information in this document. Copyright by AUDI AG.

2.12 Replacing buckle for seat-occupied sensor for front passenger's airbag deactivation (country-specific)

Special tools and workshop equipment required

♦ Torque wrench -V.A.G 1331-

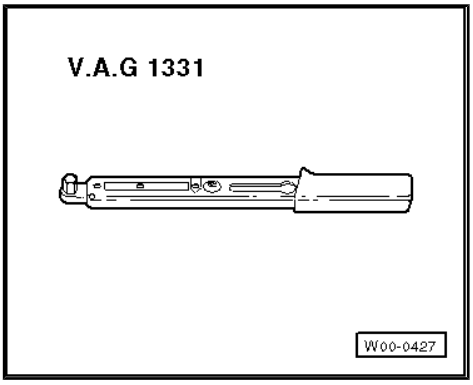

Removing:

Note

The buckle for the seat-occupied sensor for front passenger's airbag deactivation is only fitted on the front passenger's seat.

WARNING

The buckle for the seat occupied sensor for front passenger's airbag deactivation is always to be replaced following triggering of the front passenger's belt tensioner.

Protected by copyright. Copying for private or commercial purposes, in part or in whole, is not permitted unless authorised by AUDI AG. AUDI AG does not guarantee or accept any liability with respect to the correctness of information in this document. Copyright by AUDI AG.

– Remove the seat ⇒ page 282 .
– Remove the side trim on the tunnel side -1- ⇒ page 293 .
– Disconnect the wiring harness -3- at the connector leading to the wiring harness of the seat occupied recognition control unit -J706- and unfasten the clip at the seat.
– Screw out the bolt -2- with which the buckle -6- is attached and detach the buckle -6-.

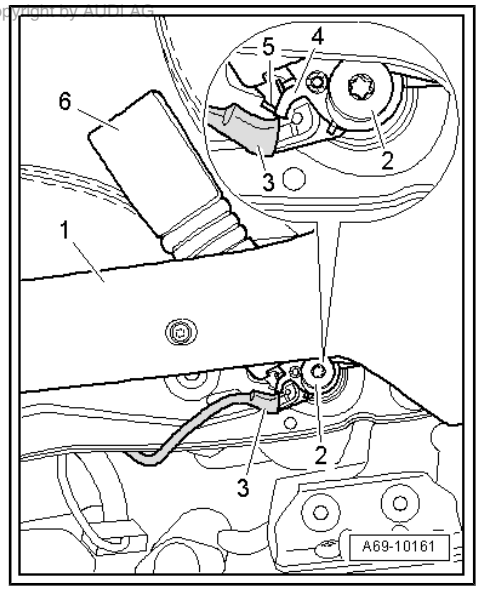

Installing:

♦ Install in reverse order. Pay attention to the following when doing so.
– Replace the buckle attachment bolt.
– When fitted, the lug at the buckle -4- must be positioned in the recess -5- of the seat.

Note

If the buckle for the seat-occupied sensor for front passenger's airbag deactivation is replaced, the report form for the seat-occupied sensor with the serial number and bar code sticker of the new buckle must be completed and sent to the importer.

Tightening torque:

Component	Nm
Bolt for buckle attachment	34

3 Servicing airbag

3.1 General view of fitting locations

Protected by copyright. Copying for private or commercial purposes, in part or in whole, is not permitted unless authorised by AUDI AG. AUDI AG does not guarantee or accept any liability with respect to the correctness of information in this document. Copyright by AUDI AG.

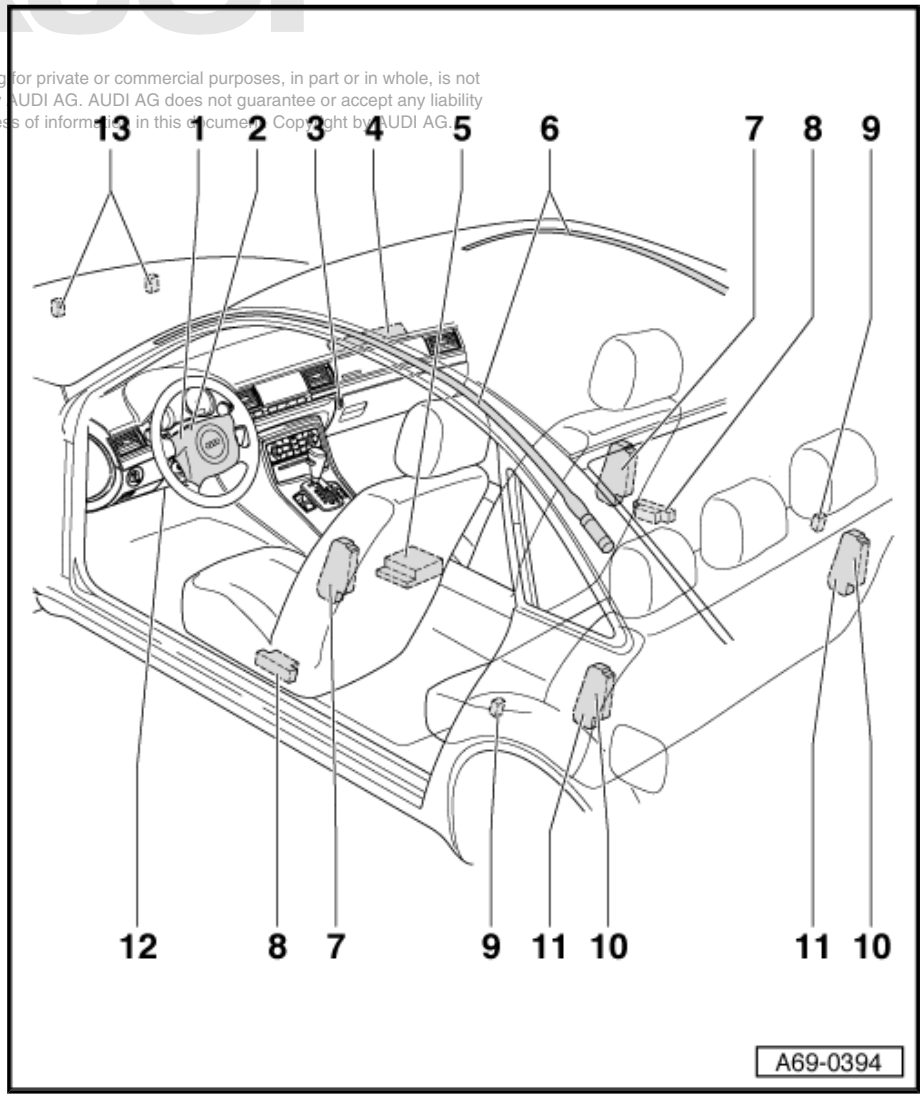

1 - Driver's airbag unit

- ❑ Removing and installing ⇒ page 123

2 - Return ring with slip ring

- ❑ Removing and installing ⇒ page 128

3 - „PASSENGER AIRBAG OFF“ lamp

- ❑ Removing and installing ⇒ page 134

4 - Key switch for deactivation of passenger airbag

- ❑ Removing and installing ⇒ page 132

5 - Front passenger's airbag unit

- ❑ Removing and installing ⇒ page 130
- ❑ Deactivation and activation possible via key switch.

6 - Airbag control unit

- ❑ Removing and installing ⇒ page 119

7 - Curtain airbag

- ❑ Removing and installing ⇒ page 142

8 - Front side airbag

- ❑ Removing and installing ⇒ page 135

9 - Front side airbag lateral acceleration sensor

- ❑ Removing and installing ⇒ page 168

10 - Rear side airbag (curtain airbag) lateral acceleration sensor

- ❑ Removing and installing ⇒ page 169

11 - Rear side airbag

- ❑ Removing and installing ⇒ page 137
- ❑ Blocking and activation ⇒ page 162

12 - Rear side airbag (individual seats)

- ❑ Removing and installing ⇒ page 139
- ❑ Blocking and activation ⇒ page 162

13 - Diagnostic connector

14 - Front airbag lateral acceleration sensor

- ❑ Removing and installing ⇒ page 166

3.2 Removing and installing airbag control unit (J 234)

Special tools and workshop equipment required

- Torque wrench -V.A.G 1410/-

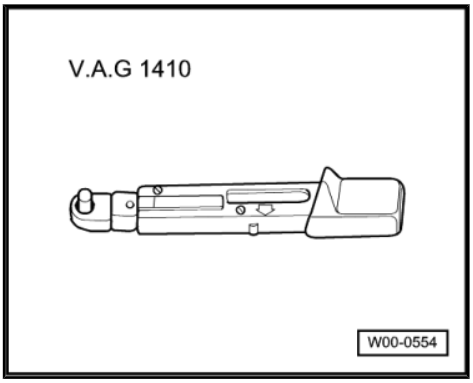

- Removing

> **WARNING**
>
> - *Heed the safety regulations for pyrotechnic components ⇒ page 94 .*
> - *Heed the disposal regulations for pyrotechnic components ⇒ page 96 .*

– With the ignition switched on, disconnect the battery earth wire ⇒ Electrical system; Rep. gr. 27 .

– Remove the centre console ⇒ page 19 .

– Detach the insulation at the perforation.

– Open the catch -3- at the connector -4-.

– Unplug the connector -4-.

– Unscrew the nuts -2- (3x).

- Tightening torque 9 Nm.

– Detach the control unit -1-.

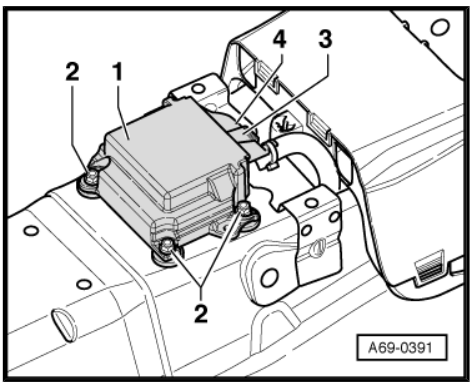

Protected by copyright. Copying for private or commercial purposes, in part or in whole, is not permitted unless authorised by AUDI AG. AUDI AG does not guarantee or accept any liability with respect to the correctness of information in this document. Copyright by AUDI AG.

♦ Installing

– Install the control unit -1- in the reverse order of removal.

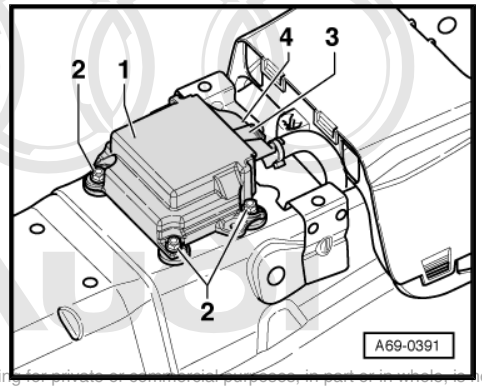

> ⚠ **WARNING**
>
> ***There must not be anyone in the vehicle when connecting the battery.***

– With the ignition switched on, connect the battery earth wire ⇒ Electrical system; Rep. gr. 27 .

Protected by copyright. Copying for private or commercial purposes, in part or in whole, is not permitted unless authorised by AUDI AG. AUDI AG does not guarantee or accept any liability with respect to the correctness of information in this document. Copyright by AUDI AG.

Note

♦ *If the airbag warning lamp -K75- indicates a fault following installation, the event recorder must be interrogated, erased and interrogated again ⇒ Vehicle diagnostic tester.*

♦ *The control unit must be encoded after replacement ⇒ Vehicle diagnostic tester.*

3.3 Removing and installing battery cut-off relay -J655-

Note

♦ *The vehicle electrical system voltage is disconnected when performing the control element test (as of software version S082 and S084 the button is no longer triggered in the control element test) or in the event of an accident.*

♦ *The battery cut-off relay -J655- interrupts the circuit electrically. The battery cut-off relay -J655- must always be replaced after triggering.*

Removal with button

– Open the cover -8-.

– Unscrew the bolt -7-.

– Unscrew the terminal -3-.

– Unscrew the terminal -4-.

– Unclip the connector -6- at the retainer tabs -5- (2x).

– Unplug the connector -6-.

♦ Installing

– Install the battery terminal isolator -2- in the reverse order of removal.

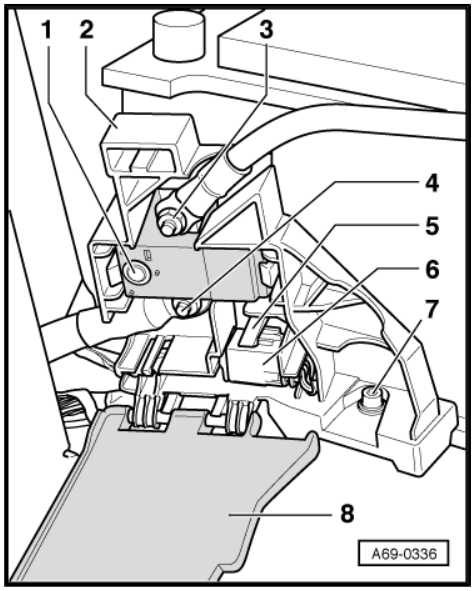

Removal without button

– Open the cover -7-.
– Unscrew the bolt -6-.
– Unscrew the terminal -3-.
– Unscrew the terminal -2-.
– Unclip the connector -5- at the retainer tabs -4- (2x).
– Unplug the connector -5-.
♦ Installing
– Install the battery terminal isolator -1- in the reverse order of removal.

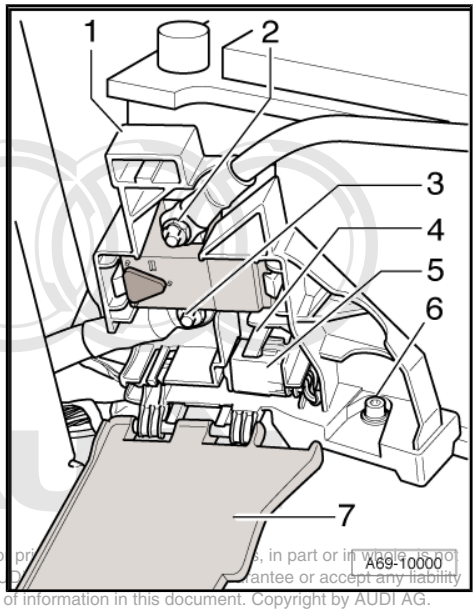

Protected by copyright. Copying for pri... s, in part or in whole, is not permitted unless authorised by AU... antee or accept any liability with respect to the correctness of information in this document. Copyright by AUDI AG.

3.4 Removing and installing battery isolation igniter -N253-

Special tools and workshop equipment required

♦ Vehicle diagnostic tester
♦ Torque wrench -V.A.G 1331-

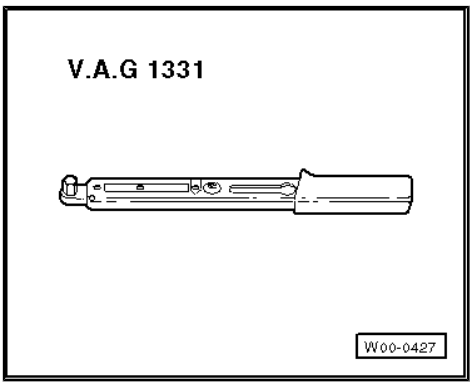

Note

If the airbag warning lamp -K75- lights following an accident, use the ⇒ Vehicle diagnostic tester to check whether crash data have been stored. If this is the case, check whether an entry has been made in the fault memory for the battery isolation igniter -N253- (Fault »001 Resistance too high«). If so, the battery isolation igniter -N253- must be replaced.

Fitting location: In luggage compartment on right beneath side cover for luggage compartment trim

Removing:

> ⚠ **WARNING**
>
> - *Heed the safety regulations for pyrotechnic components ⇒ page 94 .*
> - *Heed the disposal regulations for pyrotechnic components ⇒ page 96 .*

– With the ignition switched on, disconnect the battery earth wire ⇒ Electrical system; Rep. gr. 27 .

– Open the cover -1- for the battery isolation igniter -N253- .

> ⚠ **WARNING**
>
> *Before unplugging the connector, discharge static by briefly touching the door striker plate for example.*

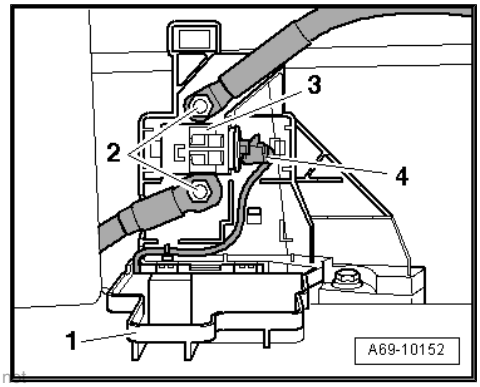

– Release the catch of the connector -4- and unplug the connector.

– Unscrew the nuts -2- (2x) and take out the battery isolation igniter -N253- .

Protected by copyright. Copying for private or commercial purposes, in part or in whole, is not permitted unless authorised by AUDI AG. AUDI AG does not guarantee or accept any liability with respect to the correctness of information in this document. Copyright by AUDI AG.

Installing:

> ⚠ **WARNING**
>
> *Heed the safety regulations for pyrotechnic components ⇒ page 94 .*

– Install in reverse order, paying attention to the following:

– Comply with the specified tightening torque ⇒ page 122 .

– When plugging in the connector, make sure it engages and locks properly.

> ⚠ **WARNING**
>
> *There must not be anyone in the vehicle when connecting the battery.*

– With the ignition switched on, connect the battery earth wire ⇒ Electrical system; Rep. gr. 27 .

– As a final step, interrogate the event recorder of the airbag control unit -J234- and deal with any faults ⇒ Vehicle diagnostic tester.

Tightening torques:

Component	Nm
Battery isolation igniter -N253-	20

4 Servicing driver side airbag -N95-

Block diagram

- ⇒ „4.1 Removing and installing driver side airbag unit N95 “, page 123
- ⇒ „4.2 Removing and installing steering wheel“, page 126
- ⇒ „4.3 Removing and installing airbag coil connector and return ring with slip ring F138 “, page 128

4.1 Removing and installing driver side airbag unit -N95-

Protected by copyright. Copying for private or commercial purposes, in part or in whole, is not permitted unless authorised by AUDI AG. AUDI AG does not guarantee or accept any liability with respect to the correctness of information in this document. Copyright by AUDI AG.

Special tools and workshop equipment required

- Torque wrench -V.A.G 1410/-

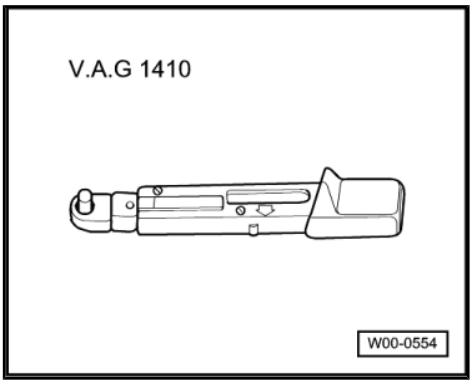

Note

- *The airbag unit removal and installation operations are the same for all steering wheel versions.*
- *The only difference between the airbag units is the number of connectors:*
- *Plug for coil connector and - as additional equipment - connector for multi-function steering wheel*
- *Removal and installation are described on the basis of a heated 4-spoke multi-function steering wheel with Tiptronic.*

1 - Steering wheel

- ❑ Removing and installing ⇒ page 126

2 - Torx bolts -T30- (2x), 7 Nm

3 - Cap

- ❑ For Torx bolt ⇒ Item 2 (page 124) -

4 - Multi-point socket head bolt

- ❑ Tightening torque ⇒ Item 4 (page 127)
- ❑ Always replace after removing

5 - Airbag unit -N95-

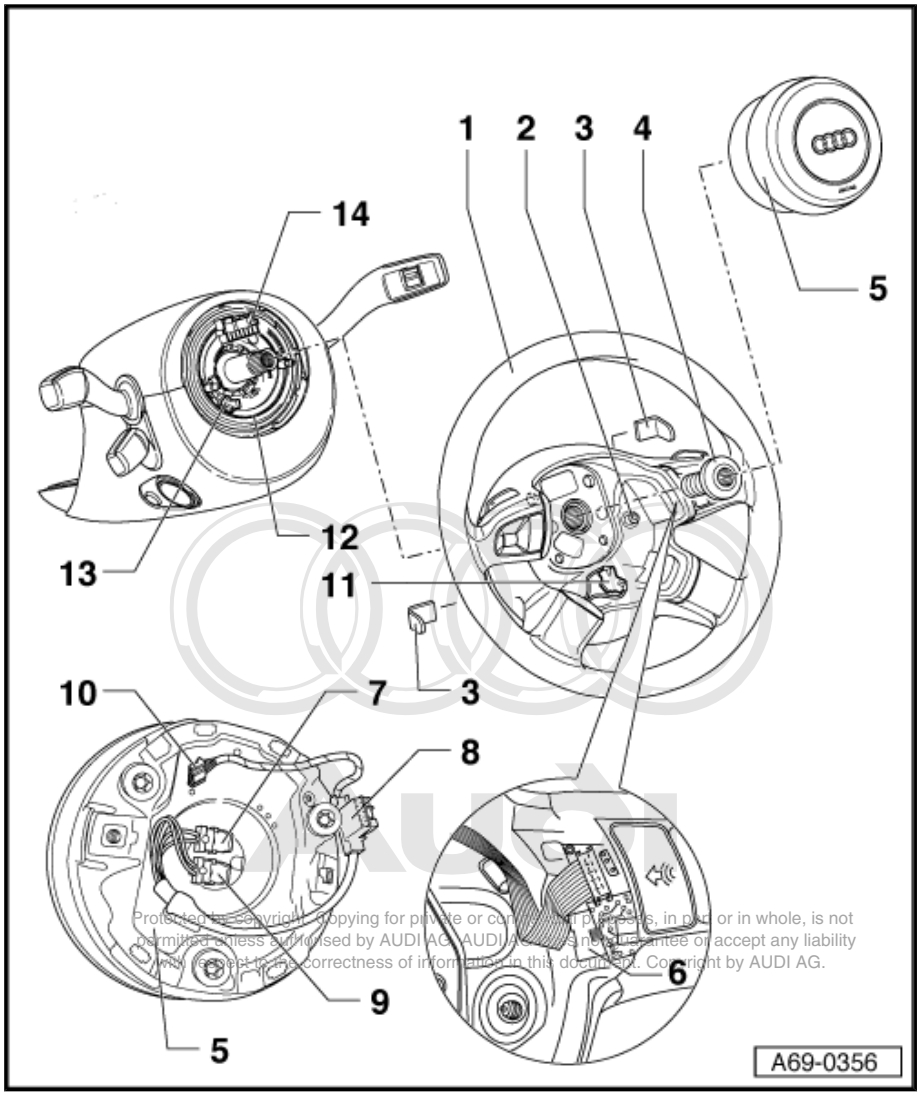

Protected by copyright. Copying for private or commercial purposes, in part or in whole, is not permitted unless authorised by AUDI AG. AUDI AG does not guarantee or accept any liability with respect to the correctness of information in this document. Copyright by AUDI AG.

♦ Removing

> ⚠ **WARNING**
>
> *Heed the safety regulations for pyrotechnic components* *⇒ page 94* *.*
>
> *Heed the disposal regulations for pyrotechnic components* *⇒ page 96* *.*

- With the ignition switched on, disconnect the battery earth wire ⇒ Electrical system; Rep. gr. 27 .
- Pull the steering wheel out and up as far as possible.
- Turn the steering wheel -1- to the centre position (wheels in straight-ahead position).
- Turn the steering wheel -1- approx. 80° to the right out of the centre position.
- Unclip the cap -3-.
- Slacken off the Torx bolt -2-.
- Turn the steering wheel -1- approx. 160° to the left.
- Unclip the cap -3-.
- Slacken off the Torx bolt -2-.

Note

Before unplugging the connectors, discharge static by briefly touching the door striker plate or vehicle body.

- Disconnect the plug -8- for the coil connector.
- Multi-function steering wheel: Unplug the connector for the multi-function steering wheel -10- from the multi-function coupling -6- in the steering wheel.
- Set down the airbag unit -5- with the impact cushion facing upwards.

♦ Installing

Note

- *Take care not to scratch the trim frame at the steering wheel when fitting the airbag unit.*
- *Make sure the connector and catch are heard to fully engage.*
- *Take care not to trap any wires.*

– Turn the steering wheel -1- to the centre position (spoke must be horizontal).

– Hold the airbag unit -5- in front of the steering wheel. Make sure the word „Airbag“ is legible (horizontal).

– Multi-function steering wheel: Plug in the connector for the multi-function steering wheel -10- at the multi-function coupling -6- in the steering wheel.

– Route the wiring for the multi-function steering wheel in the foam compartment provided.

Protected by copyright. Copying for private or commercial purposes, in part or in whole, is not permitted unless authorised by AUDI AG. AUDI AG does not make any representation or warranty or guarantee or accept any liability with respect to the correctness of information in this document. Copyright by AUDI AG.

– Connect the plug for the coil connector -8- to the coupling for the airbag unit -14- at the return ring with slip ring -12-.

– Position the airbag unit -5- in the steering wheel.

– Turn the steering wheel -1- approx. 80° to the right out of the centre position.

– Screw in the Torx bolt -2- by approx. 2 turns.

– Turn the steering wheel -1- approx. 160° to the left.

– Screw in the Torx bolt -2- by approx. 2 turns.

– Sound the horn 3x to achieve alignment.

– Avoid further contact with the airbag unit.

– Tighten the Torx bolts -2- to the specified torque.

– Clip in the caps -3-. Make sure the caps engage properly.

WARNING

There must not be anyone in the vehicle when connecting the battery.

– With the ignition switched on, connect the battery earth wire ⇒ Electrical system; Rep. gr. 27 .

Note

If the airbag warning lamp -K75- indicates a fault following installation, the event recorder must be interrogated, erased and interrogated again ⇒ Vehicle diagnostic tester.

6 - Multi-function coupling

❑ For multi-function steering wheel

❑ For ease of illustration, the multi-function coupling is shown with the trim frame detached

7 - Connector for airbag unit

❑ Mechanically encoded to prevent interchange

8 - Plug for coil connector

9 - Connector for airbag unit

- ❑ Mechanically encoded to prevent interchange

10 - Connector for multi-function steering wheel

11 - Connector for heated steering wheel

12 - Return ring with slip ring

13 - Coupling for heated steering wheel

14 - Coupling for airbag unit

4.2 Removing and installing steering wheel

Special tools and workshop equipment required

- Torque wrench -V.A.G 1410/-

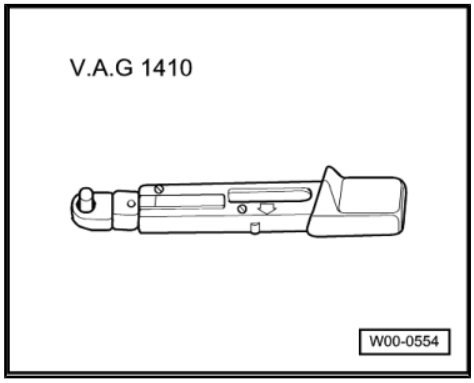

- Torque wrench -V.A.G 1332-

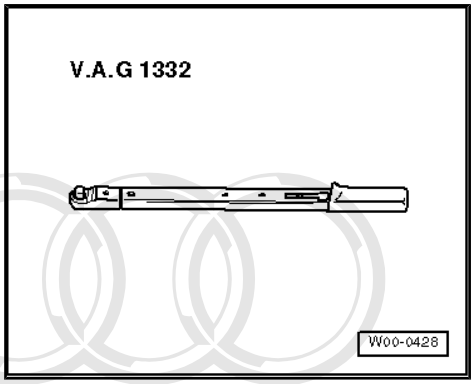

Note

- *The steering wheel removal and installation operations are the same for all steering wheel versions.*
- *On heated steering wheels, the connector for the heated steering wheel is also to be unplugged.*

Protected by copyright. Copying for private or commercial purposes, in part or in whole, is not permitted unless authorised by AUDI AG. AUDI AG does not guarantee or accept any liability with respect to the correctness of information in this document. Copyright by AUDI AG.

1 - Steering wheel

- Remove the airbag unit -5- ⇒ page 123 .
- Move the steering wheel to the centre position (wheels in straight-ahead position).
- Screw out the multi-point socket head bolt -4-.
- Heated steering wheel: Unplug the connector for heated steering wheel -11-.
- If the steering wheel to be removed is to be re-installed, mark the position of the steering wheel with respect to the steering column.
- Detach the steering wheel -1-.

♦ Installing

The wheels must be in straight-ahead position when installing the steering wheel.

- Attach the steering wheel -1-.

On installing the steering wheel removed: Make sure the marks on the steering column and steering wheel coincide.

On fitting a new steering wheel (no marks): The steering wheel must be mounted in centre position (spoke horizontal and wheels in straight-ahead position).

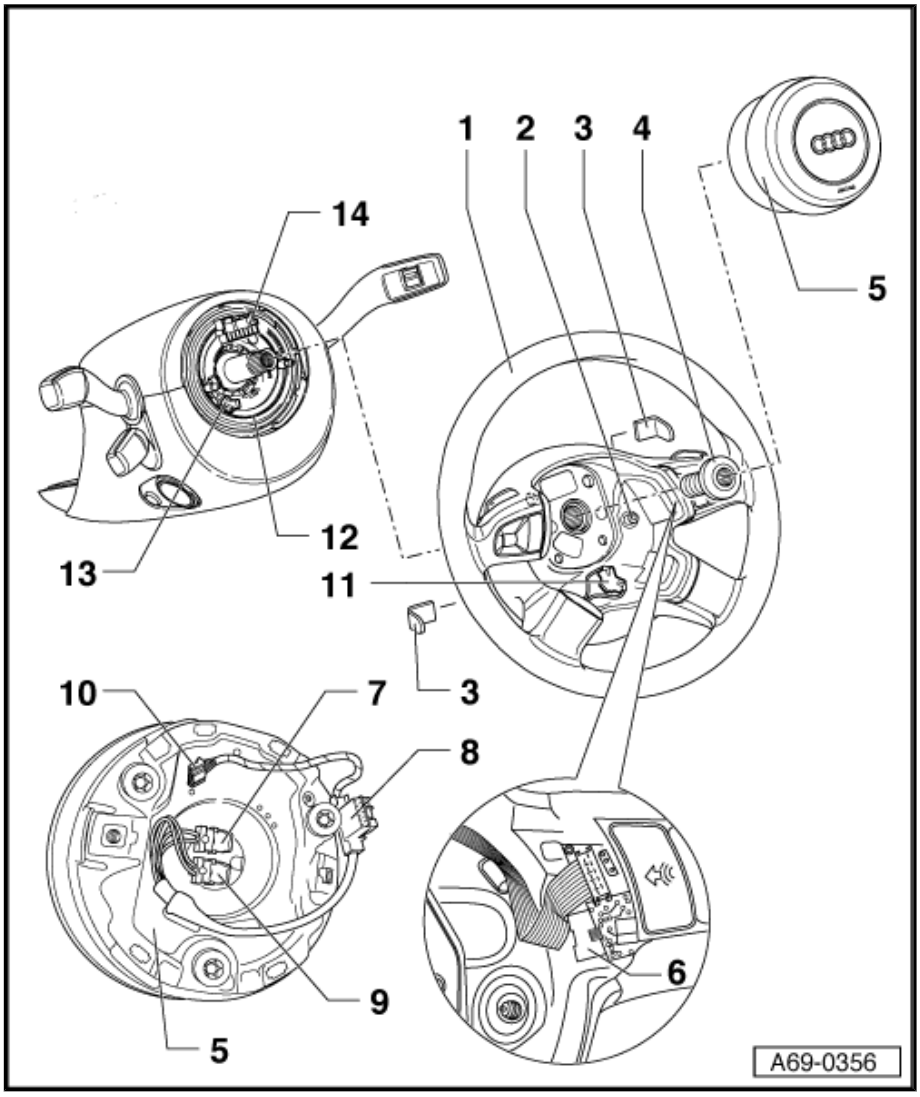

- Screw in a new multi-point socket-head bolt -4- and tighten to the specified torque.
- Heated steering wheel: Plug in the connector for heated steering wheel -11- at the coupling for heated steering wheel -13-. The connector -11- must be heard to fully engage.
- Fit the airbag unit ⇒ Page ⇒ page 123 .
- Perform a test drive.
- If the steering wheel is not straight, remove it again and adjust it on the steering column splines.

2 - Torx bolts -T30- (2x)

❑ Tightening torque ⇒ Item 2 (page 124)

3 - Cap

4 - Multi-point socket head bolt 50 Nm

5 - Airbag unit

6 - Multi-function coupling

❑ For multi-function steering wheel

Protected by copyright. Copying for private or commercial purposes, in part or in whole, is not permitted unless authorised by AUDI AG. AUDI AG does not guarantee or accept any liability with respect to the correctness of information in this document. Copyright by AUDI AG.

7 - Connector for airbag unit

❑ Mechanically encoded to prevent interchange

8 - Plug for coil connector

9 - Connector for airbag unit

❑ Mechanically encoded to prevent interchange

10 - Connector for multi-function steering wheel

11 - Connector for heated steering wheel

12 - Return ring with slip ring

13 - Coupling for heated steering wheel

14 - Coupling for airbag unit

4.3 Removing and installing airbag coil connector and return ring with slip ring - F138-

Special tools and workshop equipment required

- Screwdriver T8 -T40056 A-

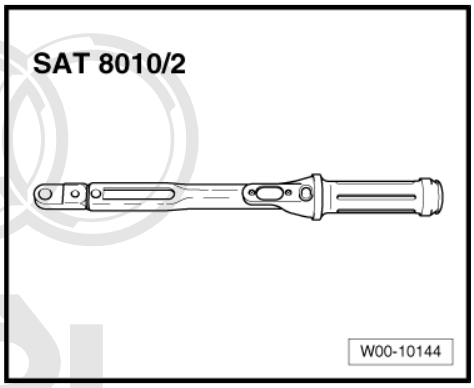

Protected by copyright. Copying for private or commercial purposes, in part or in whole, is not permitted unless authorised by AUDI AG. AUDI AG does not guarantee or accept any liability with respect to the correctness of information in this document. Copyright by AUDI AG.

Note

- *The return ring with slip ring must be removed and installed in the centre position (wheels in straight-ahead position).*
- *The new return ring with slip ring is secured in the centre position with a cable tie or shear ring.*

Removing

– Move the adjustable steering column down as far as it will go and pull out as far as the stop.

– Remove the steering wheel ⇒ page 126 .

– Remove the driver's storage compartment ⇒ page 9 .

Vehicles with mechanically adjustable steering column

– Slacken off the bolt -2-.

– Detach the handle -1-.

3 - Steering column trim

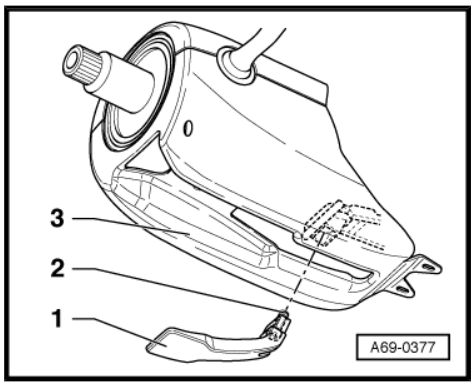

All vehicles (continued)

– Screw out the bolts -5- (2x).
– Screw out the bolt -4-.
– Screw out the Torx bolts -3- (2x) using the screwdriver T8 - T40056 A- .
– Separate the upper trim -2- for the steering column switch module from the lower trim -1- and detach both parts.

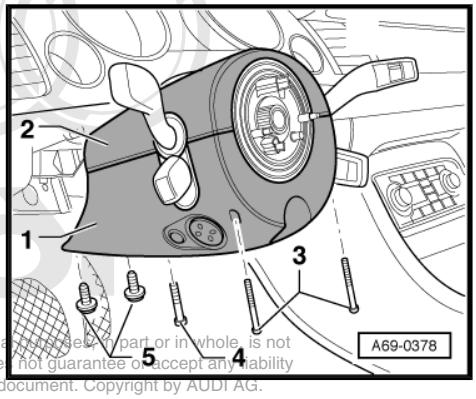

Protected by copyright. Copying for private or commercial purposes, in part or in whole, is not permitted unless authorised by AUDI AG. AUDI AG does not guarantee or accept any liability with respect to the correctness of information in this document. Copyright by AUDI AG.

– Unplug the connector -1-.
– Carefully release the fasteners -arrows- and detach the return ring with slip ring from the steering column switch module.

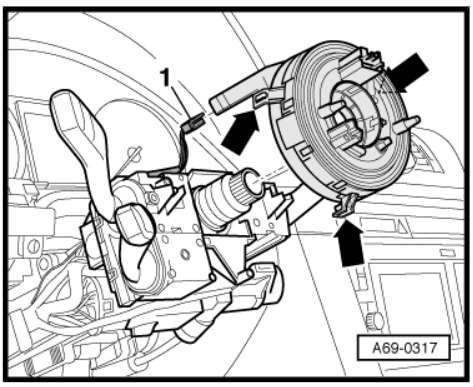

Installing

Install in reverse order. Pay attention to the following:

– Make sure all 3 fasteners of the steering column switch module and the connector are properly engaged.
– Engage the upper trim in the hooks of the lower trim, press both parts together and screw them on.
– Calibration must be performed for the steering angle sender on vehicles with a steering angle sender in the return ring with slip ring ⇒ Vehicle diagnostic tester.

4.3.1 Tightening torques

⇒ page 13 , Removing and installing steering column switch module trim

5 Servicing front passenger side airbag -N131-

Block diagram

- ⇒ „5.1 Removing and installing front passenger side airbag N131 “, page 130
- ⇒ „5.2 Removing and installing key operated switch to deactivate front passenger side airbag E224 “, page 132
- ⇒ „5.3 Service installation of key operated switch to deactivate front passenger side airbag E224 “, page 133
- ⇒ „5.4 Removing and installing PASSENGER AIRBAG OFF lamp K145 “, page 134

5.1 Removing and installing front passenger side airbag -N131-

Special tools and workshop equipment required

- Torque wrench -V.A.G 1410/-

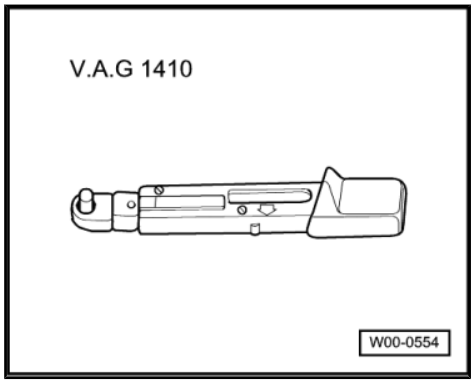

Protected by copyright. Copying for private or commercial purposes, in part or in whole, is not permitted unless authorised by AUDI AG. AUDI AG does not guarantee or accept any liability with respect to the correctness of information in this document. Copyright by AUDI AG.

1 - Front passenger's airbag unit

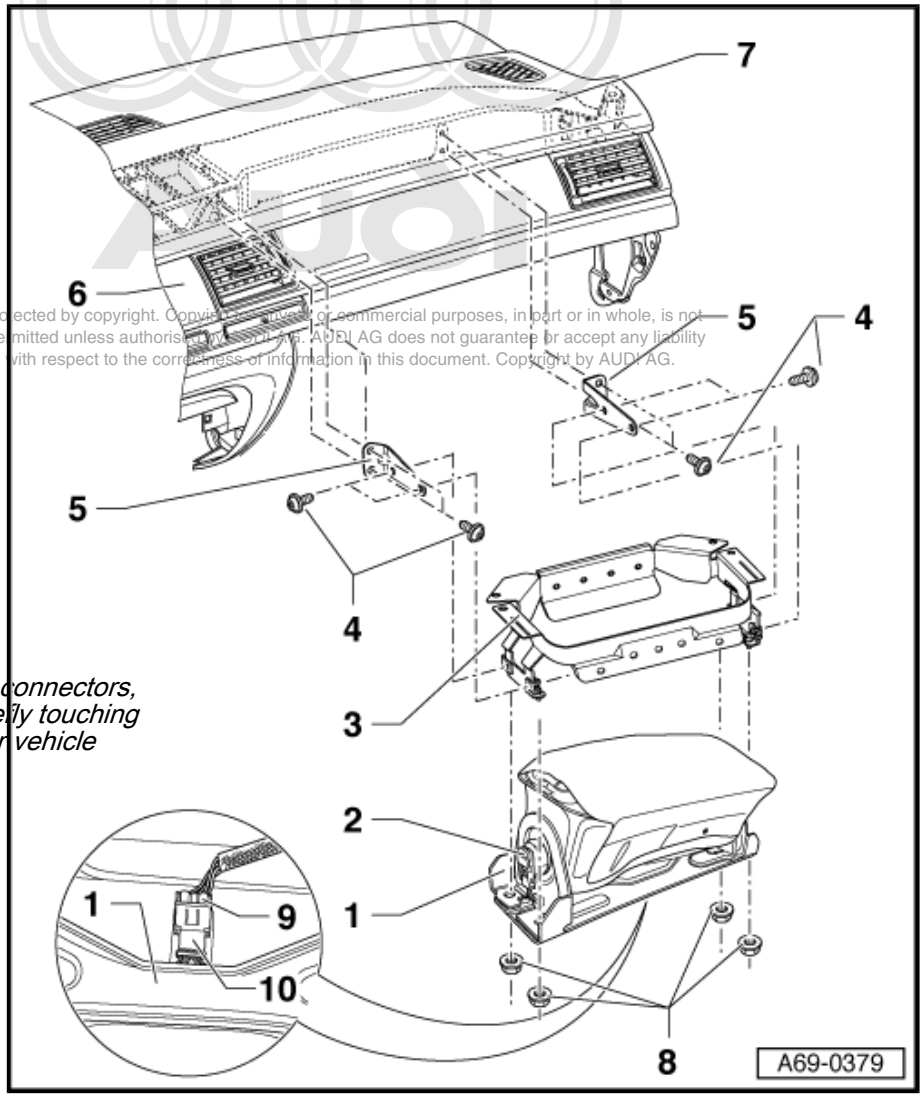

Protected by copyright. Copying for private or commercial purposes, in part or in whole, is not permitted unless authorised by AUDI AG. AUDI AG does not guarantee or accept any liability with respect to the correctness of information in this document. Copyright by AUDI AG.

♦ Removing

> **WARNING**
> *Keed the safety regulations for pyrotechnic components ⇒ page 94 .*
>
> *Keed the disposal regulations for pyrotechnic components ⇒ page 96 .*

– With the ignition switched on, disconnect the battery earth wire ⇒ Electrical system; Rep. gr. 27 .
– Remove the glove compartment ⇒ page 5 .

> **Note**
>
> *Before unplugging the connectors, discharge static by briefly touching the door striker plate or vehicle body.*

– Unplug the connector for the airbag unit -9- from the coupling -10-.

> **WARNING**
> *Never unplug the connector -2- at the front passenger's airbag unit.*

– Unscrew the nuts -8- (4x).
– Take out the airbag unit -1- downwards.
– Set down the airbag unit -1- with the impact cushion facing upwards.

♦ Installing

Install in reverse order. Pay attention to the following:
– Replace the airbag fastening elements after airbag triggering:

♦ Securing element -Item ⇒ Item 5 (page 132) -. Dash panel with airbag guide -Item ⇒ Item 6 (page 132) - and -Item ⇒ Item 3 (page 132) -. Bolt -Item ⇒ Item 4 (page 132) -. Nut -Item ⇒ Item 8 (page 132) -

– Make sure the connector for the airbag unit -9- is heard to fully engage with the coupling at the airbag unit -10-.

> **WARNING**
> *There must not be anyone in the vehicle when connecting the battery.*

– With the ignition switched on, connect the battery earth wire ⇒ Electrical system; Rep. gr. 27 .

Note

If the airbag warning lamp -K75- indicates a fault following installation, the event recorder must be interrogated, erased and interrogated again ⇒ Vehicle diagnostic tester.

Protected by copyright. Copying for private or commercial purposes, in part or in whole, is not permitted unless authorised by AUDI AG. AUDI AG does not guarantee or accept any liability with respect to the correctness of information in this document. Copyright by AUDI AG.

2 - Connector

WARNING

Never unplug the connector -2- at the front passenger's airbag unit.

3 - Airbag guide

- ❑ Riveted to dash panel
- ❑ Cannot be replaced separately
- ❑ Must be replaced together with dash panel after airbag triggering

4 - Bolts (8x), 4 Nm

- ❑ Must be replaced after airbag triggering.

5 - Securing elements (2x)

- ❑ Must be replaced after airbag triggering.
- ❑ Remove the front passenger's airbag unit.
- ❑ Screw out the bolts -4- (8x).
- ❑ Take out the securing elements -5-.

6 - Dash panel

7 - Central tube

8 - Nuts (4x), 5 Nm

- ❑ Must be replaced after airbag triggering.

9 - Connector for airbag unit

10 - Coupling for airbag unit

5.2 Removing and installing key operated switch to deactivate front passenger side airbag -E224-

Removing

WARNING

Heed the safety regulations for pyrotechnic components ***⇒ page 94*** ***.***

– With the ignition switched on, disconnect the battery earth wire ⇒ Electrical system; Rep. gr. 27 .

– Remove the glove compartment ⇒ page 5 .

– Unplug the connector -1-.
– Press on the retaining springs -arrows- with a screwdriver.
– Press out the key operated switch to deactivate front passenger side airbag -2- to the front.

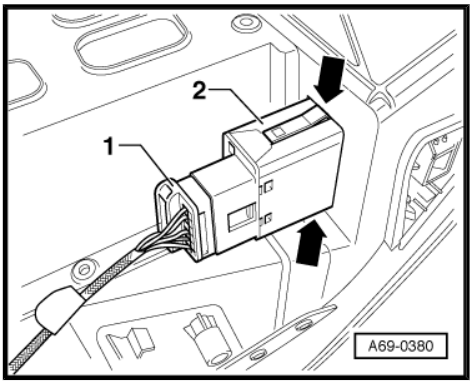

– Insert the key -3- in the lock -2-.
– Destroy the key switch -1- with the key -3- inserted.
– Break out the lock -2-.

Installing

– Press the lock -2- with the key -3- inserted into the new key switch -1- until the lock -2- engages.

Perform further installation of the key operated switch to deactivate front passenger side airbag in the reverse order of removal. Pay attention to the following:

– Make sure the key switch is properly engaged in the glove compartment.
– Switch on the ignition after installing the key switch.

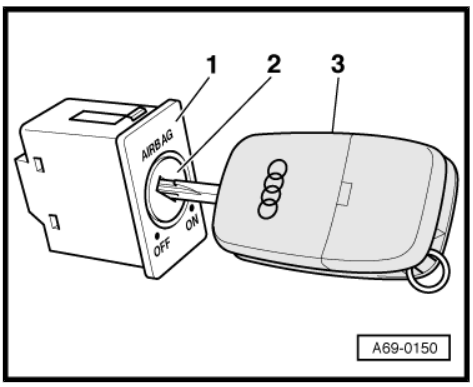

> ⚠ WARNING
>
> *There must not be anyone in the vehicle when connecting the battery.*

– With the ignition switched on, connect the battery earth wire ⇒ Electrical system; Rep. gr. 27 .

Note

If the airbag warning lamp -K75- indicates a fault following installation, the event recorder must be interrogated, erased and interrogated again ⇒ Vehicle diagnostic tester.

5.3 Service installation of key operated switch to deactivate front passenger side airbag -E224-

Protected by copyright. Copying for private or commercial purposes, in part or in whole, is not permitted unless authorised by AUDI AG. AUDI AG does not guarantee or accept any liability with respect to the correctness and completeness of the information, software, products and services.

For service installation of the key operated switch to deactivate front passenger side airbag, refer to

5.4 Removing and installing „PASSENGER AIRBAG OFF“ lamp -K145-

The „PASSENGER AIRBAG OFF“ lamp -1- (-K145-) is located in the trim panel with switch module. It cannot be replaced separately.

In the event of failure of the „PASSENGER AIRBAG OFF“ lamp, the front centre console operating unit must be replaced as part of the trim panel with switch module. ⇒ Rep. gr. 91

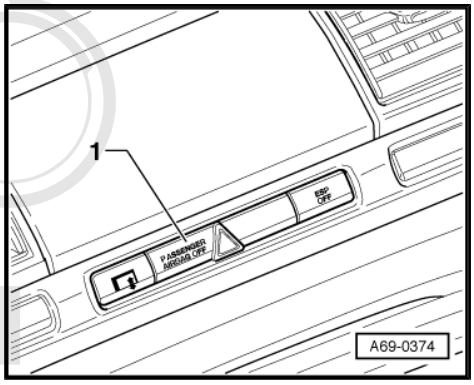

Protected by copyright. Copying for private or commercial purposes, in part or in whole, is not permitted unless authorised by AUDI AG. AUDI AG does not guarantee or accept any liability with respect to the correctness of information in this document. Copyright by AUDI AG.

6 Servicing side airbags

Block diagram

- ⇒ „6.1 Removing and installing front side airbag“, page 135
- ⇒ „6.2 Removing and installing rear side airbag“, page 137
- ⇒ „6.3 Removing and installing rear side airbag (individual electrically operated rear seat)“, page 139

6.1 Removing and installing front side airbag

Special tools and workshop equipment required

Protected by copyright. Copying for private or commercial purposes, in part or in whole, is not permitted unless authorised by AUDI AG. AUDI AG does not guarantee or accept any liability with respect to the correctness of information in this document. Copyright by AUDI AG.

- Torque wrench -V.A.G 1410/-

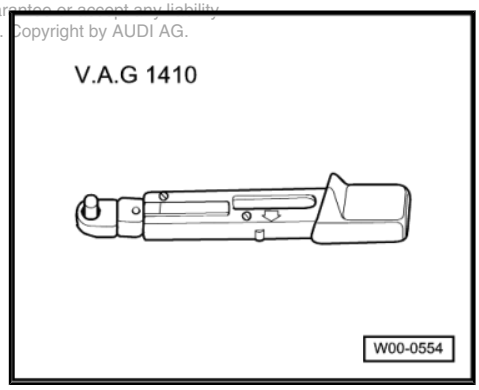

1 - Cover

2 - Holder (2x)

3 - Holder (2x)

4 - Driver's/passenger's side airbag

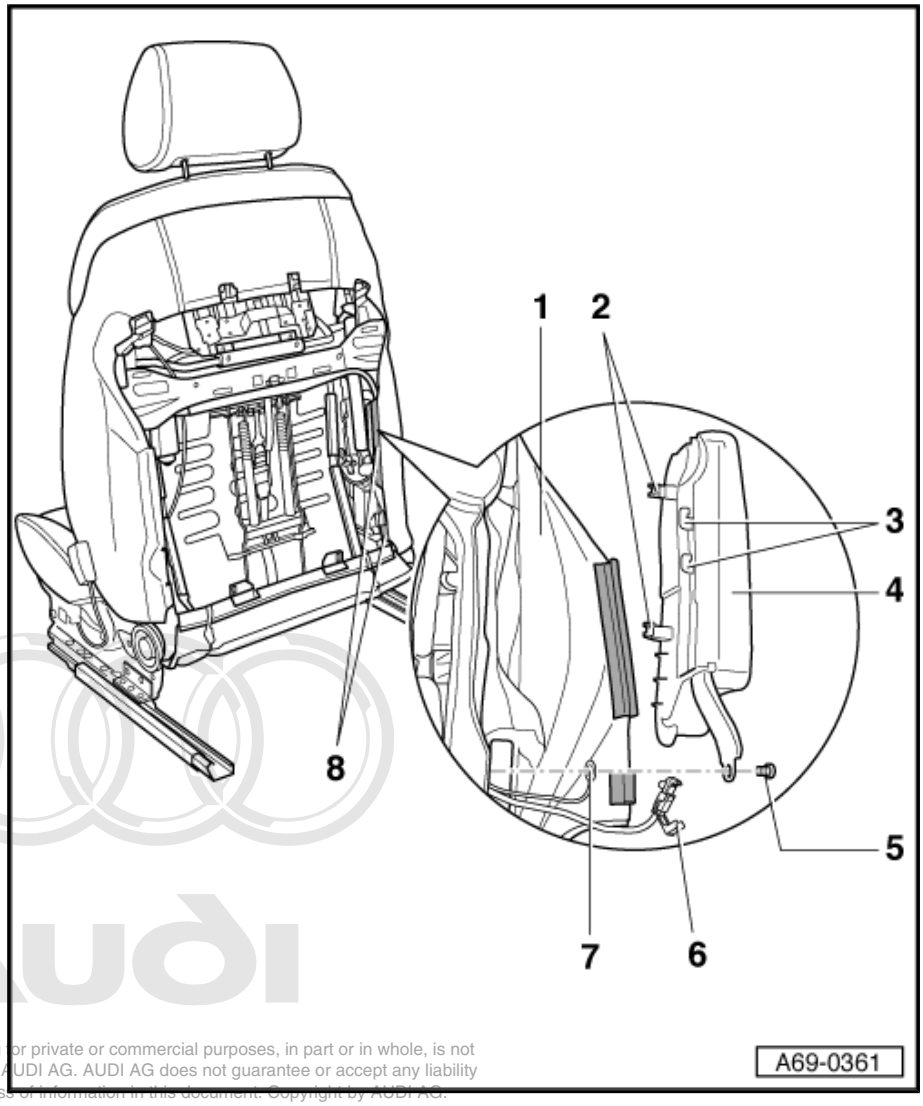

♦ Removing

> ⚠ **WARNING**
>
> *Keed the safety regulations for pyrotechnic components ⇒ page 94 .*
>
> *Keed the disposal regulations for pyrotechnic components ⇒ page 96 .*

– With the ignition switched on, disconnect the battery earth wire ⇒ Electrical system; Rep. gr. 27 .
– Remove the seat ⇒ page 282 .
– Remove the upper backrest cover panel ⇒ page 309 .
– Remove the lower backrest cover panel ⇒ page 310 .
– Use a screwdriver to prise out the side fastening strips -8- (2x).
– Fold the cover -1- forwards.
– Unplug the connector for the side airbag -6- ⇒ page 137 .
– Unscrew the bolt -5-.
– Press the side airbag -4- downwards and detach the side airbag -4- to the front.

The reproduction, distribution and copying or private or commercial purposes, in part or in whole, is not permitted unless authorized by AUDI AG. AUDI AG does not guarantee or accept any liability with respect to the correctness of information in this document. Copyright by AUDI AG.

♦ Installing

– Engage the side airbag -4- at the holders -2- (2x) in the backrest frame.

– Engage the holders -3- (2x) and press the side airbag -4- upwards as far as it will go.

– Replace the bolt -5-.

– Screw on the earth cable -7- with the side airbag -4-.

– Continue installing the side airbag -4- in reverse order.

> ⚠ **WARNING**
>
> *There must not be anyone in the vehicle when connecting the battery.*

– With the ignition switched on, connect the battery earth wire ⇒ Electrical system; Rep. gr. 27 .

Note

If the airbag warning lamp -K75- indicates a fault following installation, the event recorder must be interrogated, erased and interrogated again ⇒ Vehicle diagnostic tester.

5 - Bolt

- ❑ Tightening torque 7.5 Nm.

6 - Side airbag connector

7 - Earth cable

8 - Side fastening strips (2x)

Unplugging side airbag connector

– Unfasten the securing clip -1-.

– Unplug the connector -2-.

Protected by copyright. Copying for private or commercial purposes, in part or in whole, is not permitted unless authorised by AUDI AG. AUDI AG does not guarantee or accept any liability with respect to the correctness of information in this document. Copyright by AUDI AG.

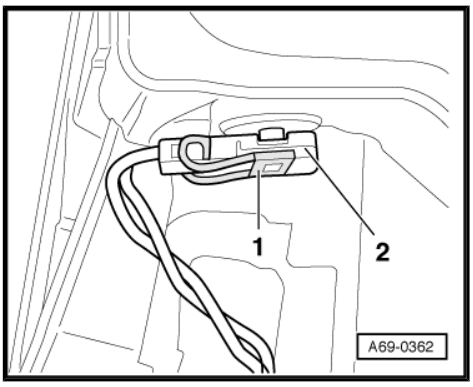

6.2 Removing and installing rear side airbag

Special tools and workshop equipment required

- Fastening tool -VAS 6138-

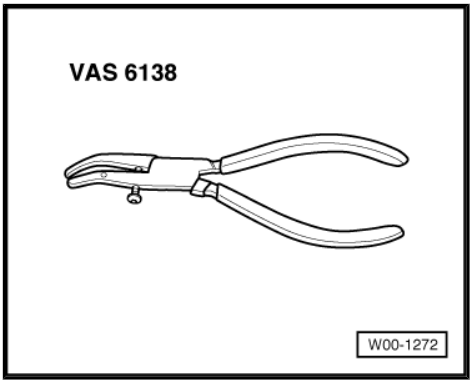

- Fastening tool -VAS 6273-

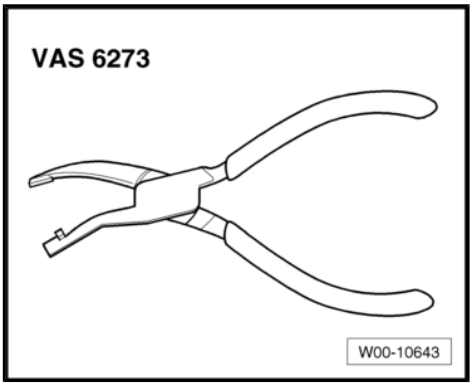

1 - Zip

2 - Rear side airbag on driver's/ front passenger's side

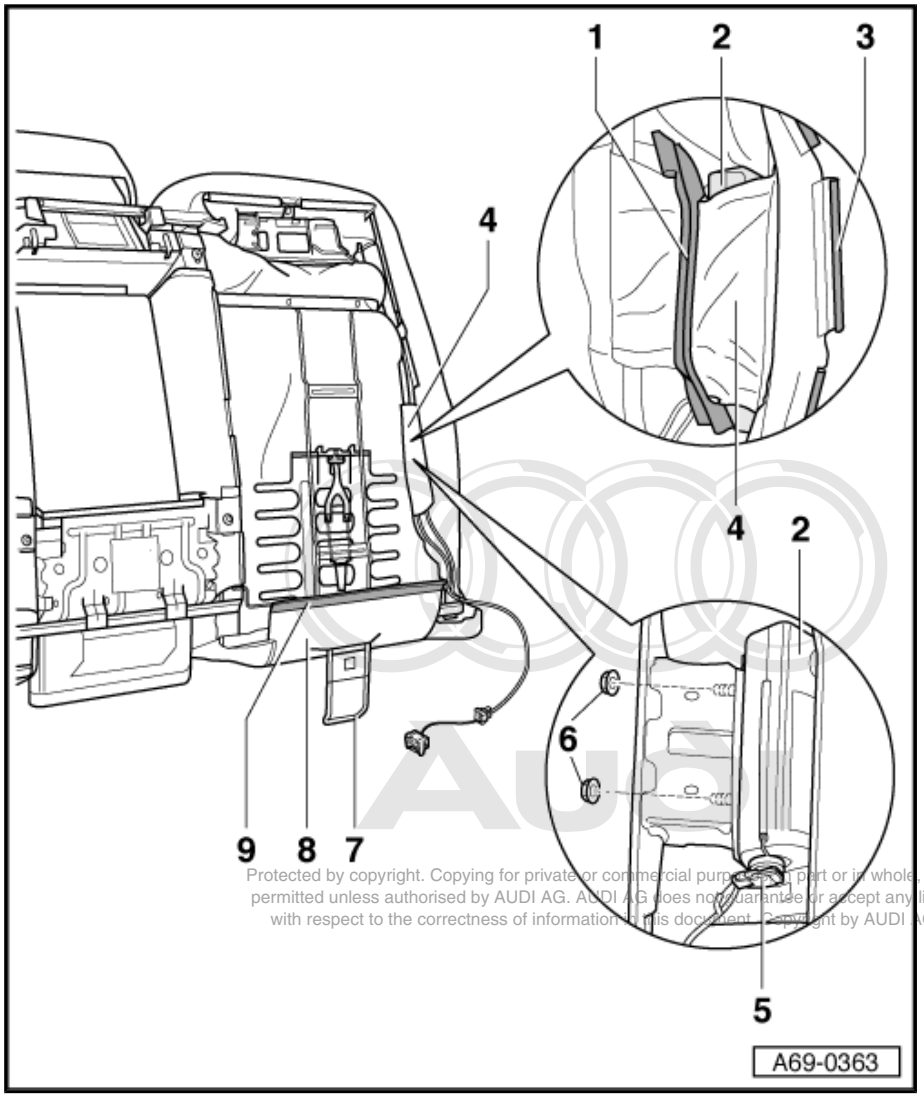

Protected by copyright. Copying for private or commercial purposes, in part or in whole, is not permitted unless authorised by AUDI AG. AUDI AG does not guarantee or accept any liability with respect to the correctness of information in this document. Copyright by AUDI AG.

♦ Removing

> ⚠ WARNING
>
> *Keed the safety regulations for pyrotechnic components ⇒ page 94 .*
>
> *Keed the disposal regulations for pyrotechnic components ⇒ page 96 .*

- With the ignition switched on, disconnect the battery earth wire ⇒ Electrical system; Rep. gr. 27 .
- Remove the rear seat bench ⇒ page 333 .
- Remove the rear seat backrest ⇒ page 334 .
- Use a screwdriver to prise out the side fastening strips -3-.
- Use a screwdriver to prise out the lower fastening strip -9-.
- Pull the lower cover -8- over the bracket -7-.
- Fold over the cover in the area of the side airbag -2-.
- Unfasten the zip -1- at the protective cover for the side airbag -4-.
- Unfasten the catch at the connector for the side airbag -5- and unplug the connector.
- Fold over the cover and padding in the area of the side airbag -2- so as to provide access to the back of the side airbag.
- Unscrew the nuts -6- (2x).
- Take out the side airbag -2-.

♦ Installing

- Install the side airbag -2- in the reverse order of removal.
- Close the zip -1- at the protective cover for the side airbag -4- using the fastening tool -VAS 6138- or fastening tool -VAS 6273- (different zips fitted).

> ⚠ WARNING
>
> *There must not be anyone in the vehicle when connecting the battery.*

- With the ignition switched on, connect the battery earth wire ⇒ Electrical system; Rep. gr. 27 .

Note

If the airbag warning lamp -K75- indicates a fault following installation, the event recorder must be interrogated, erased and interrogated again ⇒ Vehicle diagnostic tester.

3 - Side fastening strips

4 - Protective cover for side airbag

5 - Connector for side airbag

6 - Nuts (2x)

7 - Bracket

8 - Cover

9 - Lower fastening strip

6.3 Removing and installing rear side airbag (individual electrically operated rear seat)

Special tools and workshop equipment required

- Upholstery clip pliers -V.A.G 1634-

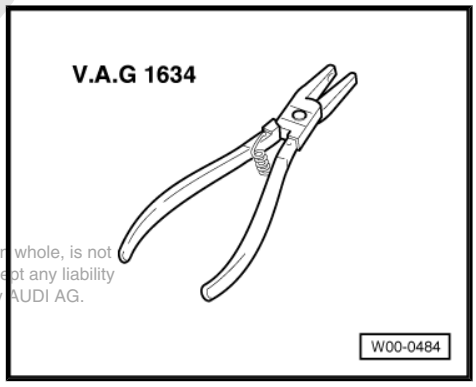

Protected by copyright. Copying for private or commercial purposes, in part or in whole, is not permitted unless authorised by AUDI AG. AUDI AG does not guarantee or accept any liability with respect to the correctness of information in this document. Copyright by AUDI AG.

1 - Nuts (2x)

Tightening torque 6 Nm.

2 - Side airbag

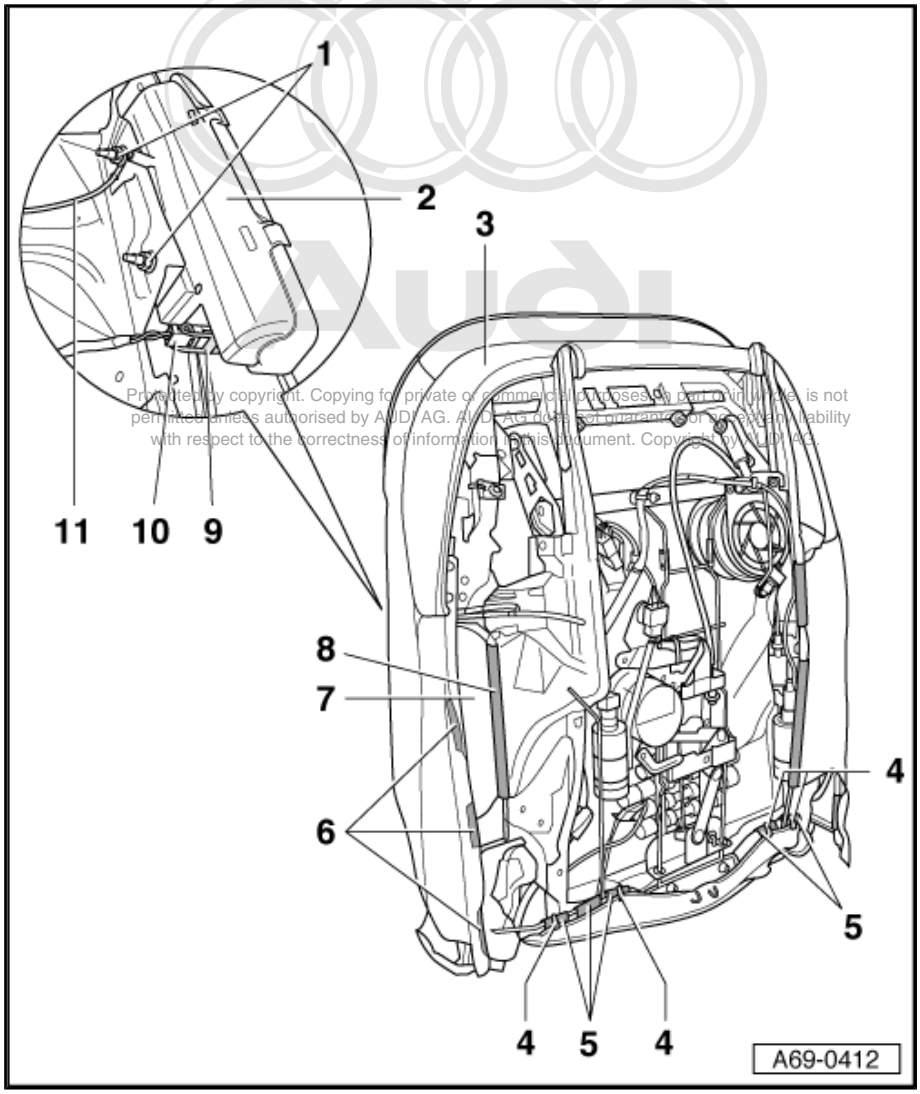

Protected by copyright. Copying for private or commercial purposes, in part or in whole, is not permitted unless authorised by AUDI AG. AUDI AG does not guarantee or assume any liability with respect to the correctness of information in this document. Copyright by AUDI AG.

♦ Removing

> ⚠ **WARNING**
>
> *Keed the safety regulations for pyrotechnic components ⇒ page 94 .*
>
> *Keed the disposal regulations for pyrotechnic components ⇒ page 96 .*

- With the ignition switched on, disconnect the battery earth wire ⇒ Electrical system; Rep. gr. 27 .
- Remove the seat pan ⇒ page 342 .
- Remove the individual rear seat ⇒ page 343 .
- Use a screwdriver to prise out the side fastening strips -6- (3x).
- Unfasten the fastening strip -8- at the protective cover -7-.
- Pinch off the upholstery clips -4- (4x).
- Use a screwdriver to prise out the lower fastening strips -5- (5x).
- Fold over the cover and padding in the area of the side airbag -2- so as to provide access to the back of the side airbag.
- Unfasten the securing clip -9-.
- Unplug the connector -10-.
- Unscrew the nuts -1- (2x).
- Take out the side airbag -2-.

♦ Installing

- Screw the earth cable -11- with the upper nut -1- to the side airbag -2-.
- Continue installing the side airbag -2- in the reverse order of removal.
- Use the upholstery stapler V.A.G 1634 to fit the new upholstery clips.

> ⚠ **WARNING**
>
> *There must not be anyone in the vehicle when connecting the battery.*

- With the ignition switched on, connect the battery earth wire ⇒ Electrical system; Rep. gr. 27 .

Note

3 - Cover

4 - Upholstery clips (4x)

5 - Lower fastening strips (5x)

6 - Side fastening strips (3x)

7 - Protective cover for side airbag

8 - Fastening strip

9 - Catch

10 - Connector for side airbag

11 - Earth cable

Protected by copyright. Copying for private or commercial purposes, in part or in whole, is not permitted unless authorised by AUDI AG. AUDI AG does not guarantee or accept any liability with respect to the correctness of information in this document. Copyright by AUDI AG.

7 Servicing curtain airbag

Block diagram

- ⇒ „7.1 Removing and installing curtain airbag“, page 142
- ⇒ „7.2 Removing and installing rear deformation element (Saloon)“, page 144
- ⇒ „7.3 Removing and installing rear deformation element (vehicles with long wheelbase)“, page 145
- ⇒ „7.4 Removing and installing front deformation element“, page 147

7.1 Removing and installing curtain airbag

Special tools and workshop equipment required

- Torque wrench -V.A.G 1783-

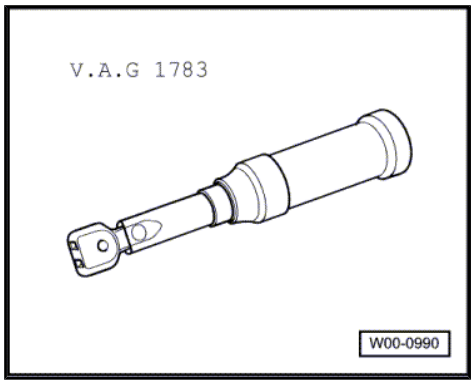

Protected by copyright. Copying for private or commercial purposes, in part or in whole, is not permitted unless authorised by AUDI AG. AUDI AG does not guarantee or accept any liability with respect to the correctness of information in this document. Copyright by AUDI AG.

1 - Clip

2 - Wiring harness

3 - Curtain airbag connector on airbag

4 - Curtain airbag connector on body

5 - Bolt

6 - Releasing lug

7 - Nut

❑ Tightening torque 5.5 Nm.

8 - Stud

9 - Holder

10 - Elongated hole

11 - Curtain airbag

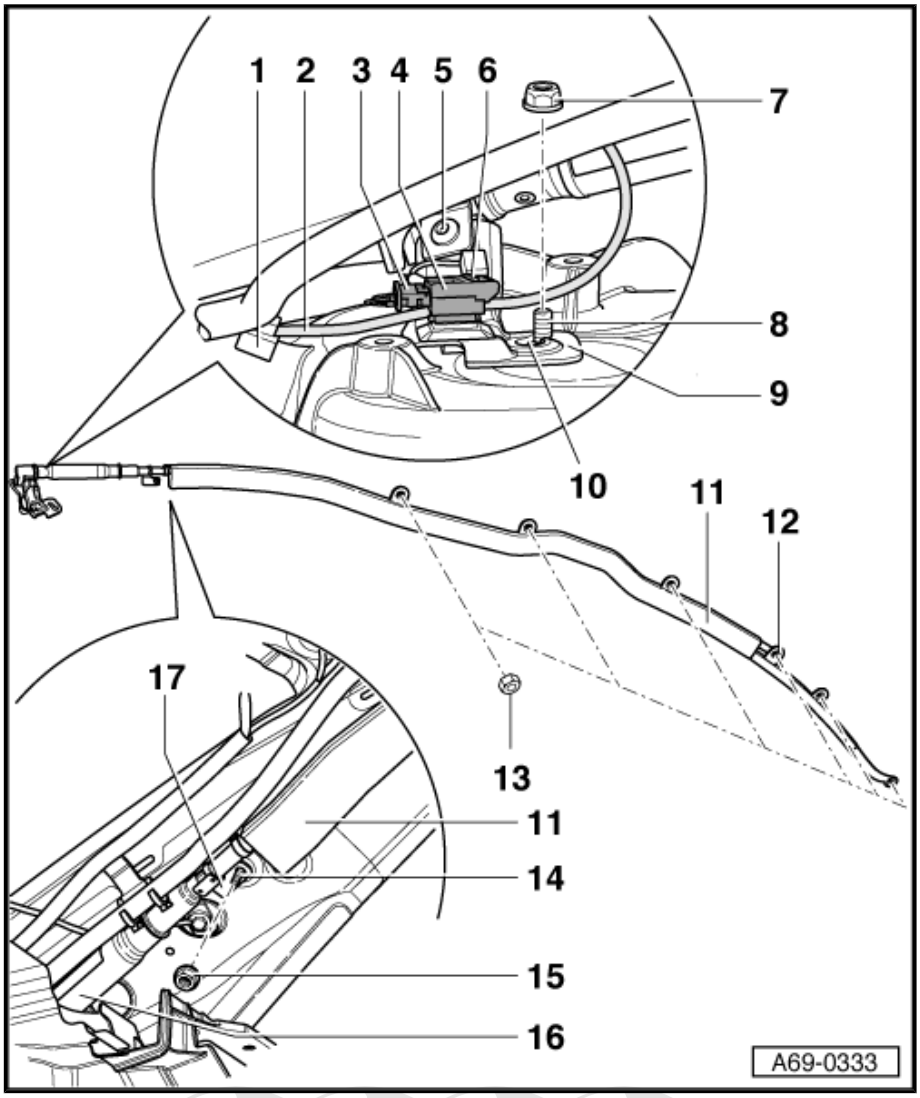

♦ Removing

> **WARNING**
>
> *Heed the safety regulations for pyrotechnic components ⇒ page 94 .*
>
> *Heed the disposal regulations for pyrotechnic components ⇒ page 96 .*

– With the ignition switched on, disconnect the battery earth wire ⇒ Electrical system; Rep. gr. 27 .
– Remove the sun visor ⇒ page 247 .
– Remove the roof grab handles ⇒ page 251 .
– Remove the upper A-pillar trim ⇒ page 250 .
– Remove the coat hook ⇒ page 260 .
– Remove the D-pillar trim ⇒ page 258 .
– Remove the rear shelf ⇒ page 262 .
– Unscrew the nuts -13- (6x).
– Unscrew the nut -15-.
– Unfasten the wiring harness -2- at the clip -1-.
– Pull the release tab -6- and unplug the connector on the body -4-.
– Unplug the connector on the airbag -3-.
– Unscrew the nut -7-.
– Lift the wiring harness -2- and pull out the holder -9-.
– Take the curtain airbag -1- out of the vehicle.

♦ Installing

Protected by copyright. Copying for private or commercial purposes, in part or in whole, is not permitted unless authorised by AUDI AG. AUDI AG does not guarantee or accept any liability with respect to the correctness of information in this document. Copyright by AUDI AG.

> **WARNING**
>
> *Always heed the curtain airbag installation sequence*

– Engage the holder -9- by way of the elongated hole -10- in the threaded pin -8- and attach the nut -7-.

– Engage the holder -17- in the threaded pin -14- and attach the nut -15-.

– Engage the curtain airbag in each threaded pin and attach the nuts -13- (6x).

– Press on the gas generator -16-.

– Make sure the threaded pin -8- is in contact with the rear stop of the elongated hole -10-.

– Tighten the nuts -7- and -15-.

– Tighten the nut -13- at the holder -12-.

– Consecutively tighten the nuts -13- (5x).

– Secure the wiring harness -2- at the clip -1-.

WARNING

There must not be anyone in the vehicle when connecting the battery.

– With the ignition switched on, connect the battery earth wire ⇒ Electrical system; Rep. gr. 27 .

Note

If the airbag warning lamp -K75- indicates a fault following installation, the event recorder must be interrogated, erased and interrogated again ⇒ Vehicle diagnostic tester.

12 - Holder

13 - Nuts (6x)

❑ Tightening torque 5.5 Nm.

14 - Stud

15 - Nut

❑ Tightening torque 5.5 Nm.

16 - Gas generator

17 - Holder

7.2 Removing and installing rear deformation element (Saloon)

Protected by copyright. Copying for private or commercial purposes, in part or in whole, is not permitted unless authorised by AUDI AG. AUDI AG does not guarantee or accept any liability with respect to the correctness of information in this document. Copyright by AUDI AG.

Special tools and workshop equipment required

♦ Torque wrench -V.A.G 1783-

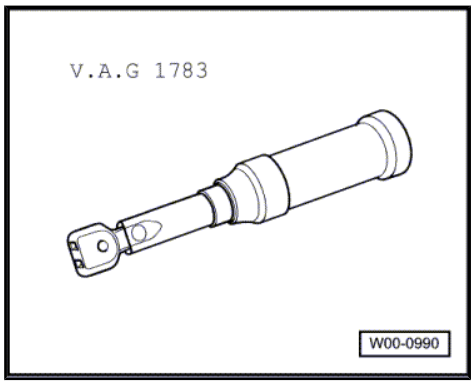

1 - Deformation element

♦ Removing

> ⚠ **WARNING**
> *Heed the safety regulations for pyrotechnic components ⇒ page 94 .*

– With the ignition switched on, disconnect the battery earth wire ⇒ Electrical system; Rep. gr. 27 .
– Remove the sun visor ⇒ page 247 .
– Remove the roof grab handles ⇒ page 251 .
– Remove the upper A-pillar trim ⇒ page 250 .
– Remove the coat hook ⇒ page 260 .
– Remove the D-pillar trim ⇒ page 258 .
– Remove the rear shelf ⇒ page 262 .
– Remove the curtain airbag ⇒ page 142 .
– Unscrew the nuts -2- (3x).
– Take out the deformation element -1-.

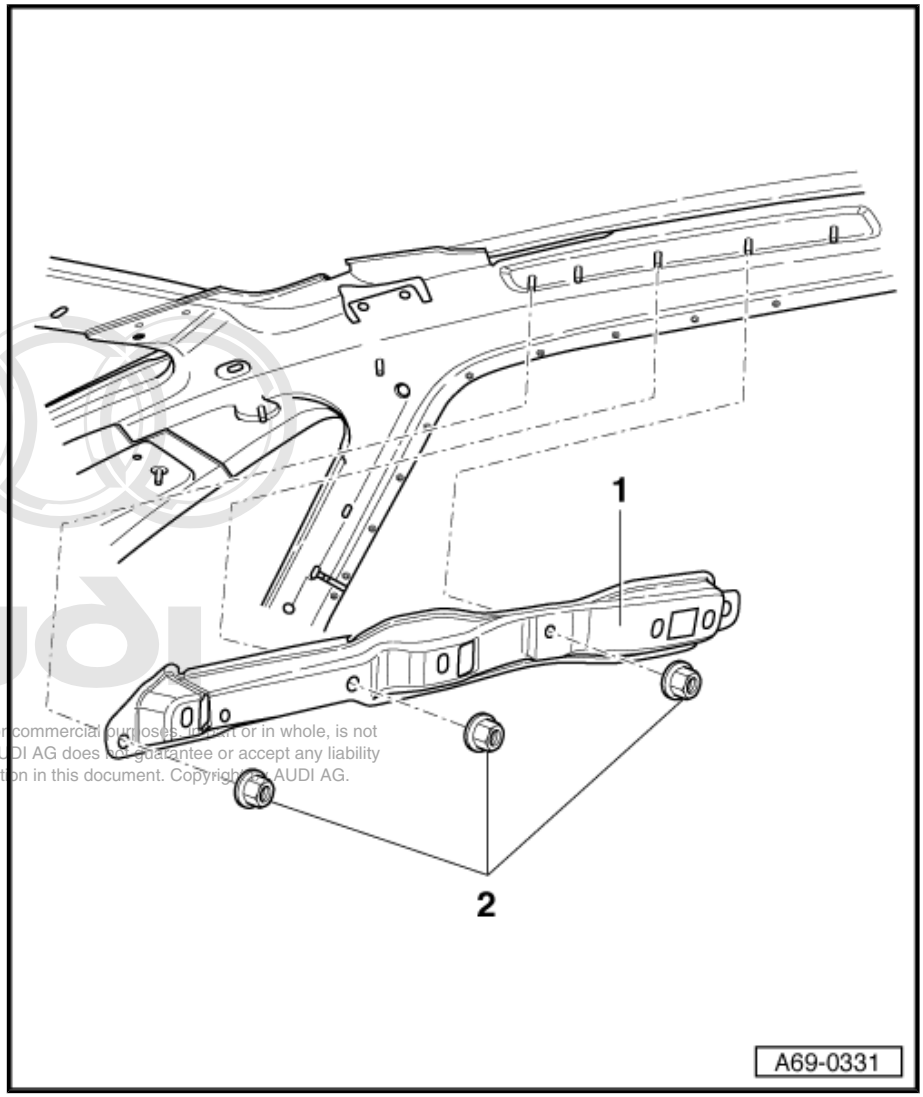

Protected by copyright. Copying for private or commercial purposes, in part or in whole, is not permitted unless authorised by AUDI AG. AUDI AG does not guarantee or accept any liability with respect to the correctness of information in this document. Copyright by AUDI AG.

♦ Installing

– Install the deformation element -1- in the reverse order of removal.

> ⚠ **WARNING**
> *There must not be anyone in the vehicle when connecting the battery.*

– With the ignition switched on, connect the battery earth wire ⇒ Electrical system; Rep. gr. 27 .

2 - Nuts (3x)

❑ Tightening torque 4 Nm.

7.3 Removing and installing rear deformation element (vehicles with long wheelbase)

Special tools and workshop equipment required

♦ Torque wrench -V.A.G 1783-

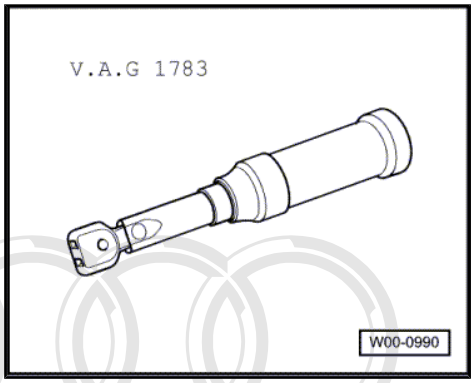

1 - Deformation element

♦ Removing

> ⚠ **WARNING**
> *Heed the safety regulations for pyrotechnic components ⇒ page 94 .*

– With the ignition switched on, disconnect the battery earth wire ⇒ Electrical system; Rep. gr. 27 .
– Remove the sun visor ⇒ page 247 .
– Remove the roof grab handles ⇒ page 251 .
– Remove the upper A-pillar trim ⇒ page 250 .
– Remove the coat hook ⇒ page 260 .
– Remove the D-pillar trim ⇒ page 258 .
– Remove the rear shelf ⇒ page 262 .
– Remove the curtain airbag ⇒ page 142 .
– Unscrew the nuts -2- (4x).
– Take out the deformation element -1-.

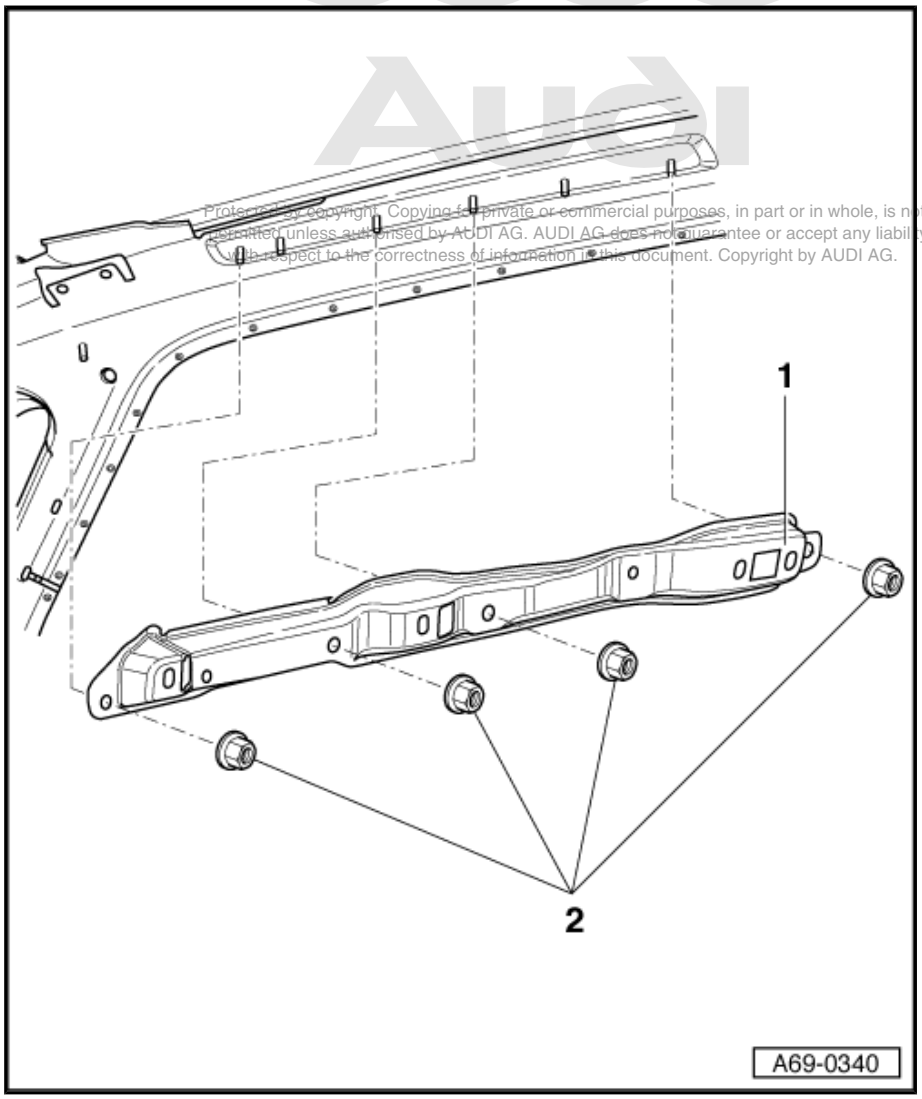

Protected by Copyright. Copying for private or commercial purposes, in part or in whole, is not permitted unless authorised by AUDI AG. AUDI AG does not guarantee or accept any liability with respect to the correctness of information in this document. Copyright by AUDI AG.

♦ Installing

– Install the deformation element -1- in the reverse order of removal.

> ⚠ **WARNING**
> *There must not be anyone in the vehicle when connecting the battery.*

– With the ignition switched on, connect the battery earth wire ⇒ Electrical system; Rep. gr. 27 .

2 - Nuts (4x)

❑ Tightening torque 4 Nm.

7.4 Removing and installing front deformation element

Special tools and workshop equipment required

- Torque wrench -V.A.G 1783-

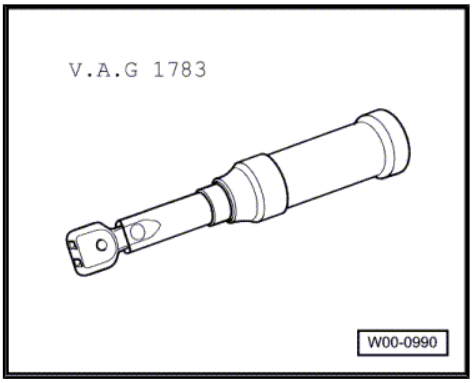

1 - Deformation element

- Removing

> **WARNING**
> *Heed the safety regulations for pyrotechnic components ⇒ page 94 .*

- With the ignition switched on, disconnect the battery earth wire ⇒ Electrical system; Rep. gr. 27 .
- Remove the sun visor ⇒ page 247 .
- Remove the roof grab handles ⇒ page 251 .
- Remove the upper A-pillar trim ⇒ page 250 .
- Remove the coat hook ⇒ page 260 .
- Remove the D-pillar trim ⇒ page 258 .
- Remove the rear shelf ⇒ page 262 .
- Remove the curtain airbag ⇒ page 142 .
- Unscrew the nuts -2- (3x).
- Take out the deformation element -1-.

- Installing

- Install the deformation element -1- in the reverse order of removal.

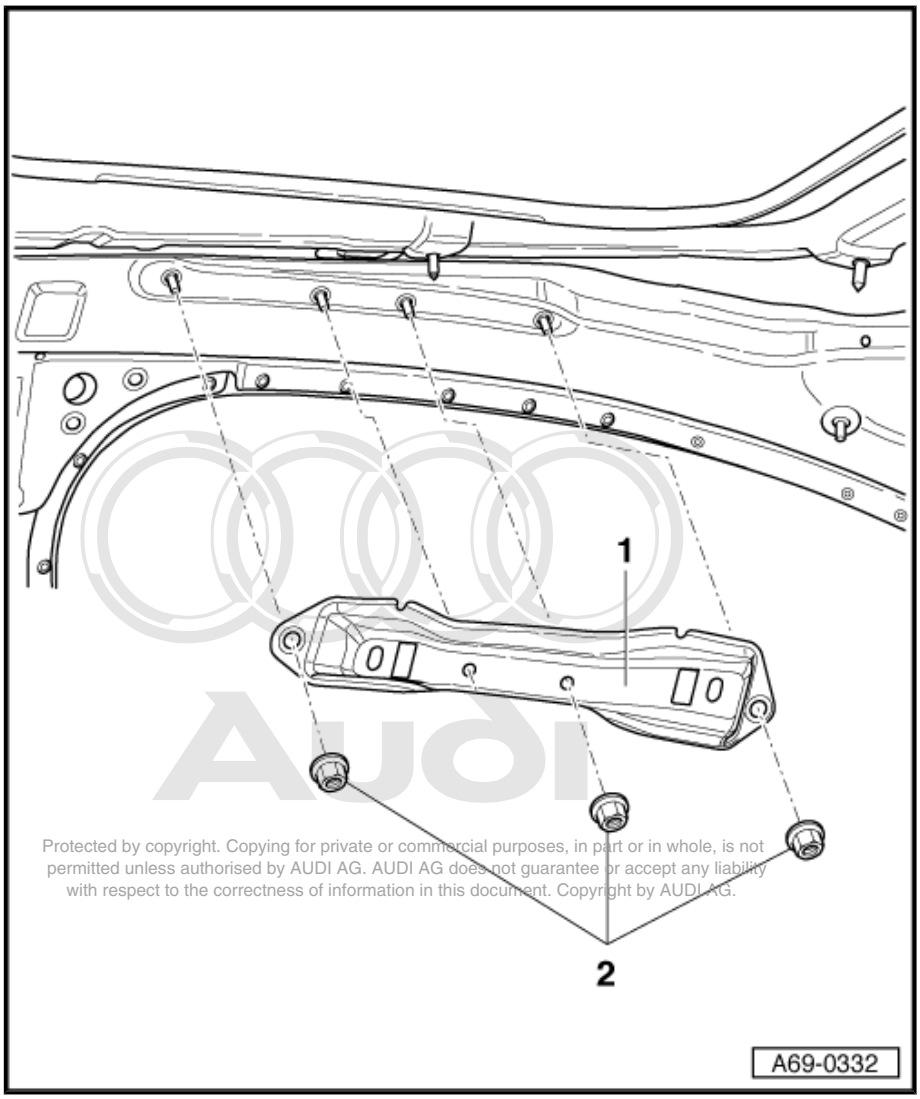

Protected by copyright. Copying for private or commercial purposes, in part or in whole, is not permitted unless authorised by AUDI AG. AUDI AG does not guarantee or accept any liability with respect to the correctness of information in this document. Copyright by AUDI AG.

> **WARNING**
> *There must not be anyone in the vehicle when connecting the battery.*

- With the ignition switched on, connect the battery earth wire ⇒ Electrical system; Rep. gr. 27 .

2 - Nuts (4x)

- ❑ Tightening torque 4 Nm.

Protected by copyright. Copying for private or commercial purposes, in part or in whole, is not permitted unless authorised by AUDI AG. AUDI AG does not guarantee or accept any liability with respect to the correctness of information in this document. Copyright by AUDI AG.

8 Removing and installing knee airbag

Block diagram

- ⇒ „8.1 Removing and installing driver's knee airbag“, page 149
- ⇒ „8.2 Removing and installing front passenger's knee airbag“, page 150
- ⇒ „8.3 Removing and installing deformation element for driver's knee airbag“, page 152
- ⇒ „8.4 Removing and installing deformation element for front passenger's knee airbag“, page 154

8.1 Removing and installing driver's knee airbag

Special tools and workshop equipment required

- Torque wrench -V.A.G 1783-

Protected by copyright. Copying for private or commercial purposes, in part or in whole, is not permitted unless authorised by AUDI AG. AUDI AG does not guarantee or accept any liability with respect to the correctness of information in this document. Copyright by AUDI AG.

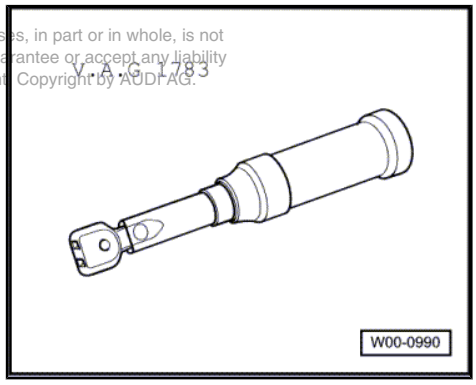

Removing

> ⚠ **WARNING**
>
> - *Heed the safety regulations for pyrotechnic components ⇒ page 94 .*
> - *Heed the disposal regulations for pyrotechnic components ⇒ page 96 .*

– With the ignition switched on, disconnect the battery earth wire ⇒ Electrical system; Rep. gr. 27 .

– Remove the driver's storage compartment ⇒ page 9 . Remember that the knee airbag is attached to the storage compartment.

– Unplug the knee airbag connector (yellow).

– To do so, pull the catch -2- in arrow direction and unplug the connectors -1- and -3-.

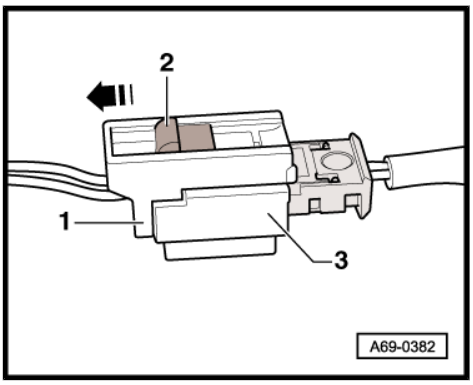

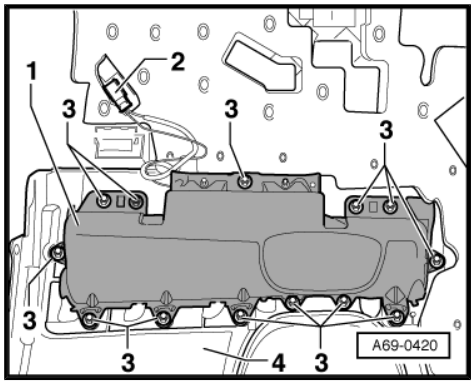

– Take out the storage compartment -4-.
– Unclip the connector -2-.
– Unscrew the nuts -3- (13x).
– Take out the driver's knee airbag -1-.
– Set down the airbag unit -1- with the impact cushion facing upwards.

Installing

Install in reverse order, paying attention to the following:

– Replace the following components after airbag triggering:
♦ Driver's storage compartment -4-
♦ Bolts for securing driver's storage compartment
♦ Nuts -3- for securing knee airbag
– Make sure the connector for the knee airbag is heard to fully engage with the coupling.

> ⚠ WARNING
>
> *There must not be anyone in the vehicle when connecting the battery.*

– With the ignition switched on, connect the battery earth wire ⇒ Electrical system; Rep. gr. 27 .

Note

If the airbag warning lamp -K75- indicates a fault following installation, the event recorder must be interrogated, erased and interrogated again ⇒ Vehicle diagnostic tester.

Tightening torques

♦ Knee airbag to driver's storage compartment: 2.5 Nm

8.2 Removing and installing front passenger's knee airbag

Special tools and workshop equipment required

♦ Torque wrench -V.A.G 1783-

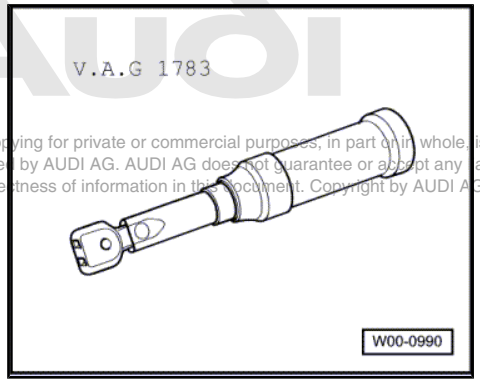

Protected by copyright. Copying for private or commercial purposes, in part or in whole, is not permitted unless authorised by AUDI AG. AUDI AG does not guarantee or accept any liability with respect to the correctness of information in this document. Copyright by AUDI AG.

Removing

Reproduction of this document for private or commercial purposes, in part or in whole, is not permitted unless authorised by AUDI AG. AUDI AG does not guarantee or accept any liability with respect to the correctness of information in this document. Copyright by AUDI AG.

WARNING

- *Heed the safety regulations for pyrotechnic components* *⇒ page 94* *.*
- *Heed the disposal regulations for pyrotechnic components* *⇒ page 96* *.*

– With the ignition switched on, disconnect the battery earth wire ⇒ Electrical system; Rep. gr. 27 .

– Remove the glove compartment ⇒ page 5 . Remember that the knee airbag is attached to the glove compartment.

– Unplug the knee airbag connector (yellow).

– To do so, pull the catch -2- in arrow direction and unplug the connectors -1- and -3-.

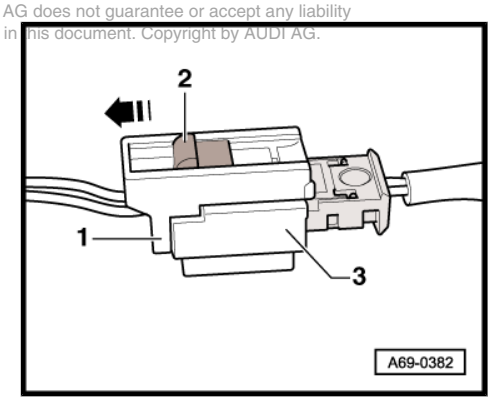

– Take out the glove compartment -2-.

– Screw out the bolts -3- (3x).

– Unclip the cover -1- at the bottom.

– Disengage the cover -1- at the top.

– Detach the cover -1-.

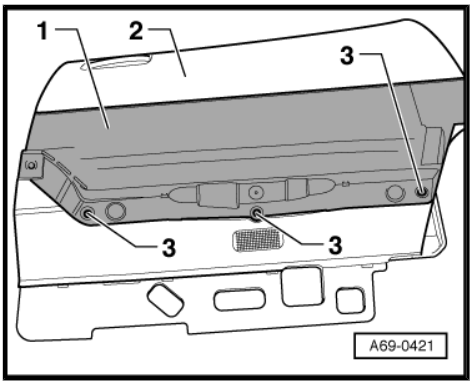

– Screw out the bolts -2- (6x) and -3- (2x).

WARNING

- *Never slacken off the bolts -arrow A-.*
- *Never unplug the connector -arrow B-.*

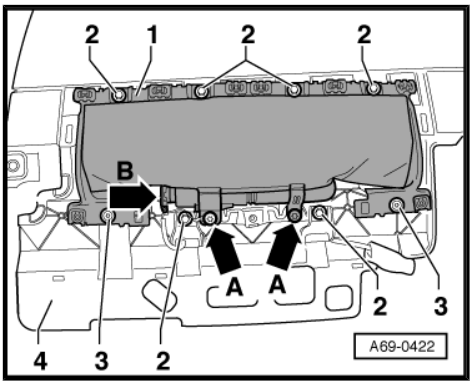

– Take out the front passenger's knee airbag -1-.

– Set down the airbag unit -1- with the impact cushion facing upwards.

4 - Glove compartment

Installing

Install in reverse order, paying attention to the following:

– Replace the following components after airbag triggering:

- Glove compartment
- Glove compartment bolts
- Bolts -2- and -3- for securing knee airbag

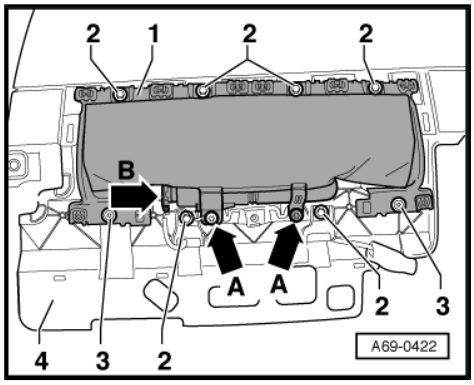

> ⚠ **WARNING**
>
> *Always replace the cover -1- following removal.*

– When fitting, start by engaging the cover -1- at the top.
– Then clip on the cover -1- at the bottom.
– Make sure the connector for the knee airbag is heard to fully engage with the coupling.

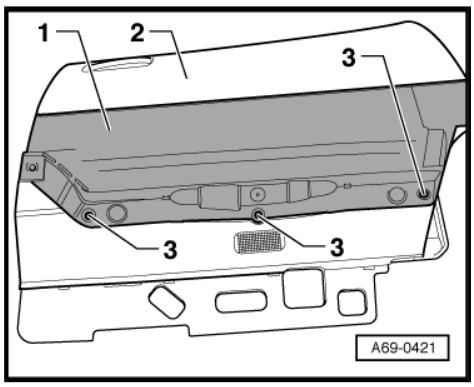

> ⚠ **WARNING**
>
> *There must not be anyone in the vehicle when connecting the battery.*

– With the ignition switched on, connect the battery earth wire ⇒ Electrical system; Rep. gr. 27 .

Note

If the airbag warning lamp -K75- indicates a fault following installation, the event recorder must be interrogated, erased and interrogated again ⇒ Vehicle diagnostic tester.

Tightening torques

- Bolt -2-: 2.5 Nm
- Bolt -3-: 2.5 Nm
- Cover to glove compartment: 2.5 Nm

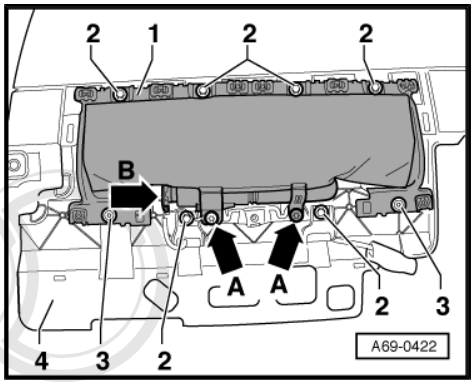

8.3 Removing and installing deformation element for driver's knee airbag

Special tools and workshop equipment required

Protected by copyright. Copying for private or commercial purposes, in part or in whole, is not permitted unless authorised by AUDI AG. AUDI AG does not guarantee or accept any liability with respect to the correctness of information in this document. Copyright by AUDI AG.

♦ Torque wrench -V.A.G 1783-

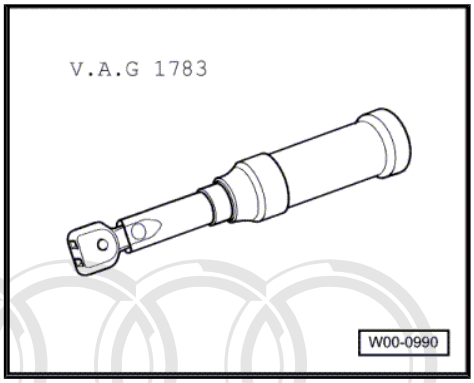

Removing

> ⚠ **WARNING**
>
> *Heed the safety regulations for pyrotechnic components* *⇒ page 94* *.*

Copyright. Copying for private or commercial purposes, in part or in whole, is not permitted unless authorised by AUDI AG. AUDI AG does not guarantee or accept any liability with respect to the correctness of information in this document. Copyright by AUDI AG.

– With the ignition switched on, disconnect the battery earth wire ⇒ Electrical system; Rep. gr. 27 .
– Remove the driver's storage compartment ⇒ page 9 . Remember that the knee airbag is attached to the storage compartment.
– Unplug the knee airbag connector (yellow).
– To do so, pull the catch -2- in arrow direction and unplug the connectors -1- and -3-.

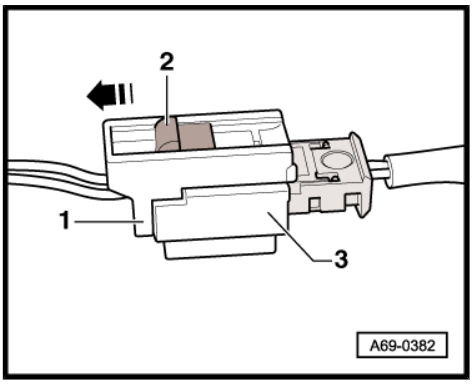

Deformation element for left knee airbag

– Unscrew the nuts -3- (2x).
– Take out the deformation element -1-.

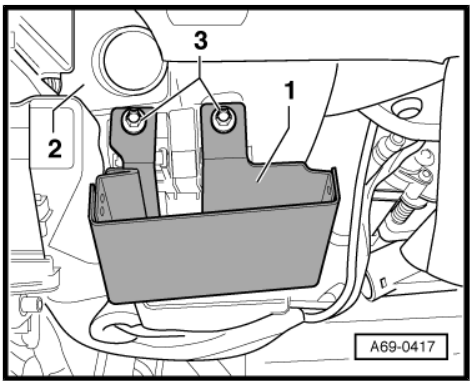

Deformation element for right knee airbag

– Screw out the bolts -2- (4x).

– Take out the deformation element -1-.

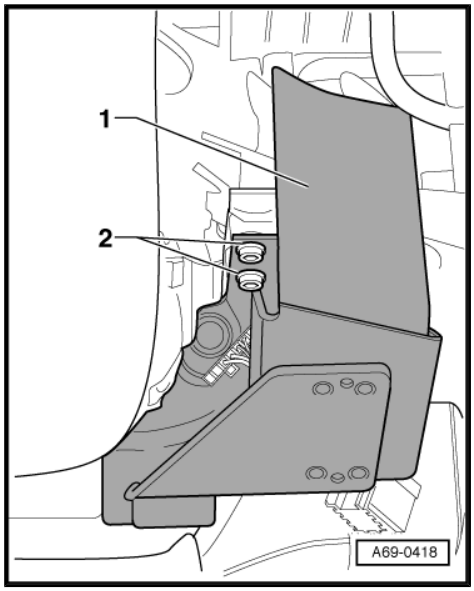

Installing

Install in reverse order, paying attention to the following:

– Make sure the connector for the knee airbag is heard to fully engage with the coupling.

> **WARNING**
>
> *There must not be anyone in the vehicle when connecting the battery.*

– With the ignition switched on, connect the battery earth wire
  ⇒ Electrical system; Rep. gr. 27 .

Note

If the airbag warning lamp -K75- indicates a fault following installation, the event recorder must be interrogated, erased and interrogated again ⇒ Vehicle diagnostic tester.

Copyright by AUDI AG. Reproduction or distribution, in whole or in part, is not permitted unless authorized by AUDI AG. AUDI AG does not guarantee or assume any liability with respect to the correctness of information in this document. Copyright by AUDI AG.

Tightening torques

- Nuts for left deformation element: 4.5 Nm
- Bolts for right deformation element: 2.5 Nm

8.4 Removing and installing deformation element for front passenger's knee airbag

Special tools and workshop equipment required

- Torque wrench -V.A.G 1783-

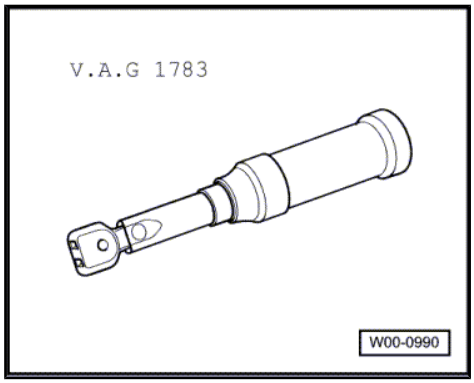

Removing

> **WARNING**
>
> *Heed the safety regulations for pyrotechnic components* *⇒ page 94* *.*

– With the ignition switched on, disconnect the battery earth wire
  ⇒ Electrical system; Rep. gr. 27 .

– Remove the glove compartment ⇒ page 5 . Remember that the knee airbag is attached to the glove compartment.

– Unplug the knee airbag connector (yellow).

– To do so, pull the catch -2- in arrow direction and unplug the connectors -1- and -3-.

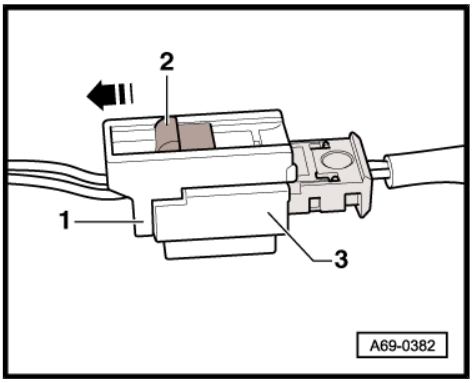

– Screw out the bolts -2- (4x).

– Detach the deformation element -1- from the central tube -3-.

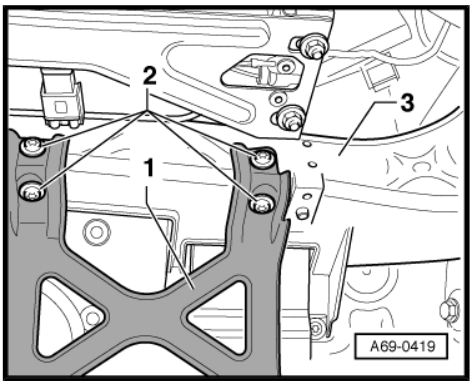

Installing

Install in reverse order, paying attention to the following:

– Make sure the connector for the knee airbag is heard to fully engage with the coupling.

WARNING

There must not be anyone in the vehicle when connecting the battery.

– With the ignition switched on, connect the battery earth wire ⇒ Electrical system; Rep. gr. 27 .

Note

If the airbag warning lamp -K75- indicates a fault following installation, the event recorder must be interrogated, erased and interrogated again ⇒ Vehicle diagnostic tester.

Tightening torques

- Deformation element to central tube: 4.5 Nm
- Glove compartment to deformation element: 2.5 Nm

Protected by copyright. Copying for private or commercial purposes, in part or in whole, is not permitted unless authorised by AUDI AG. AUDI AG does not guarantee or accept any liability with respect to the correctness of information in this document. Copyright by AUDI AG.

9 Servicing seat-occupied sensor for front passenger's airbag deactivation (country-specific)

Block diagram

- ⇒ „9.1 Removing and installing seat occupied sensor“, page 156
- ⇒ „9.2 Replacing rigid foam inserts“, page 161

9.1 Removing and installing seat occupied sensor

Special tools and workshop equipment required

- Torque wrench -V.A.G 1783-

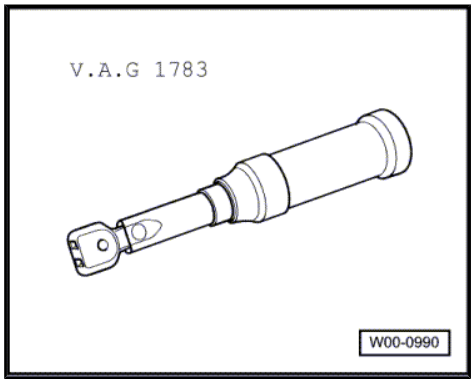

WARNING

Heed the safety regulations for pyrotechnic components ⇒ page 94 .

WARNING

The replacement part (service kit) for the seat-occupied sensor is already pre-calibrated and is never to be separated. The service kit consists of the:

- *Seat occupied recognition control unit -J706-*
- *Pressure sensor for seat occupied recognition -G452-*
- *Seat occupied sensor mat*
- *Seat padding*
- *Wiring harness*

WARNING

The seat cover must also be replaced on replacing the service kit in the A8. The seat cover must be ordered separately.

Protected by copyright. Copying for private or commercial purposes, in part or in whole, is not permitted unless authorised by AUDI AG. AUDI AG does not guarantee or accept any liability with respect to the correctness of information in this document. Copyright by AUDI AG.

Note

The seat-occupied sensor is only fitted on the front passenger's seat.

Caution

As, in the original as-delivered vehicle condition, the tabs -4- of the seat-occupied sensor mat -6- are fitted beneath the cross-piece -5- of the seat pan -1-, the seat-occupied sensor cannot be removed without it being destroyed.

In the case of service kits already fitted, the tabs -4- of the seat-occupied sensor mat -6- are positioned above the cross-piece -5- of the seat pan -1-. The service kits can thus be removed without being destroyed.

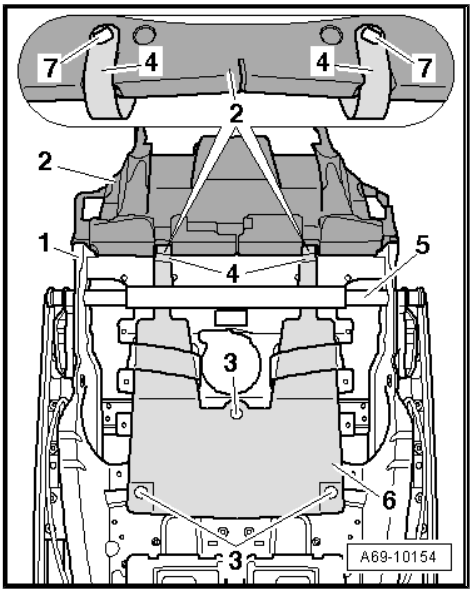

Removing seat-occupied sensor:

– Remove the front passenger's seat ⇒ page 282 .

♦ Before unplugging the connectors -3- to -5- ⇒ page 157 and taking the seat out of the vehicle, position the seat as follows for work on the seat-occupied sensor.

Protected by copyright. Copying for private or commercial purposes, in part or in whole, is not permitted unless authorised by AUDI AG. AUDI AG does not guarantee or assume any liability with respect to the correctness of information in this document. Copyright by AUDI AG.

– Move the seat in axial direction to the centre position.

– Move the seat upwards as far as it will go.

– Set the seat cushion adjuster as far forwards as it will go.

– With the ignition switched on, disconnect the battery earth wire ⇒ Electrical system; Rep. gr. 27 .

– Attach the holder for seat repair -VAS 6136- to the engine and gearbox holder -VAS 6095- .

– Attach the front seat to the holder for seat repair -VAS 6136- .

– Remove the backrest ⇒ page 288 .

– Unplug the connector -1- between the service kit and seat wiring harness.

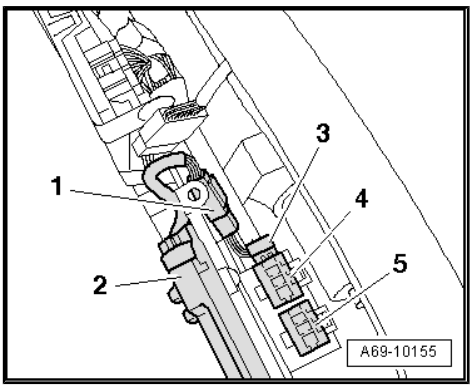

– Remove the bolts -1- (3x).
– Remove the hexagon nuts -2- (2x).
– Unfasten the clip -3-.
– Pull the retaining plate -4- carefully in arrow direction and carefully lift the retaining plate. „Take care not to deform the retaining plate“. Following the course of the cable, guide the seat occupied recognition control unit -J706- -5- through the narrow opening.

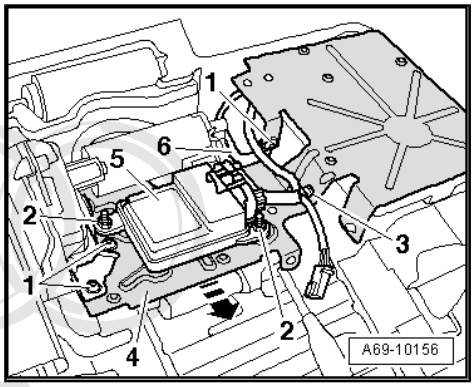

Note

In the original as-delivered vehicle condition, the cable runs beneath the holder -6-. The illustration shows the cable routing of the service kit for the seat-occupied sensor (cable routed above holder -6-).

Protected by copyright. Copying for private or commercial purposes, in part or in whole, is not permitted unless authorised by AUDI AG. AUDI AG does not guarantee or accept any liability with respect to the correctness of information in this document. Copyright by AUDI AG.

Caution

If it proves impossible to guide the seat occupied recognition control unit -J706- through the narrow opening, unplug the connector at the seat occupied recognition control unit -J706- -5- and detach the control unit. This operation is only to be performed if the seat-occupied sensor is in the original as-delivered condition (seat-occupied sensors in original as-delivered condition cannot be removed without them being destroyed).

– Detach the connector -1- of the pressure sensor for seat occupied recognition -G452- from the holder -2-.

Caution

The connector -1- is not to be unplugged.

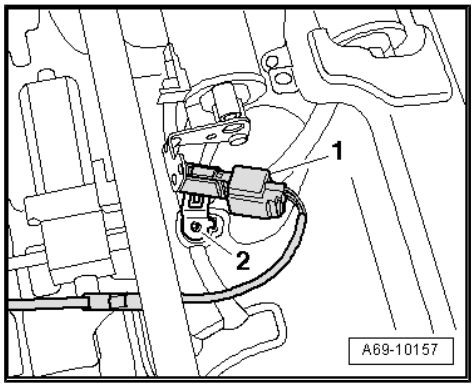

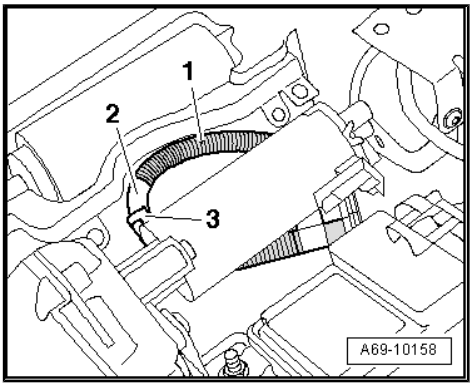

– Unclip the pressure hose -1- from the holder -3-.

– Detach the cover padding ⇒ page 360 . Separate the cover from the seat padding ⇒ page 361

Note

On account of the clips -7- (2x), the seat padding -2- is permanently connected to the seat-occupied sensor mat -6-.

Caution

The clips -7- (2x) are not to be unfastened.

– Fold back the seat padding -2-.

– Remove the anti-squeak pad.

– Remove the clips -3- (3x). Damaged clips must be replaced.

Note

2 rigid foam inserts are bonded on the seat pan -1- beneath the seat-occupied sensor mat -6-. The rigid foam inserts are required for correct functioning of the system. The rigid foam inserts are not part of the scope of delivery of the service kit. Replace the rigid foam inserts if damaged *⇒ page 161* *.*

– Pull out the seat occupied recognition control unit -J706- through the hole in the seat pan -1- (beneath the seat-occupied sensor mat -6-).

– If the tabs -4- (2x) at the seat-occupied sensor mat -6- are positioned beneath the cross-piece -5- »as shown«, the tabs -4- (2x) must be severed.

Caution

If the tabs -4- are positioned above the cross-piece -5-, a service kit has already been fitted. The tabs -4- are then not to be severed.

Protected by copyright. Copying for private or commercial purposes, in part or in whole, is not permitted unless authorised by AUDI AG. AUDI AG does not guarantee or accept any liability with respect to the correctness of information in this document. Copyright by AUDI AG.

WARNING

The pressure hose and the seat-occupied sensor mat -6- are never to be kinked.

Installing service kit for seat-occupied sensor:

WARNING

Heed the safety regulations for pyrotechnic components ***⇒ page 94*** ***.***

– Install in reverse order. Pay attention to the following.

WARNING

The replacement part (service kit) for the seat-occupied sensor is already pre-calibrated and is never to be separated. The service kit consists of the:

- *Seat occupied recognition control unit -J706-*
- *Pressure sensor for seat occupied recognition -G452-*
- *Seat occupied sensor mat*
- *Seat padding*
- *Wiring harness*

WARNING

The seat cover must also be replaced on replacing the service kit in the A8. The seat cover must be ordered separately.

– Replace damaged components.

Note

2 rigid foam inserts are bonded on the seat pan -1- beneath the seat-occupied sensor mat -6-. The rigid foam inserts are required for correct functioning of the system. The rigid foam inserts are not part of the scope of delivery of the service kit. Replace the rigid foam inserts if damaged ⇒ page 161 .

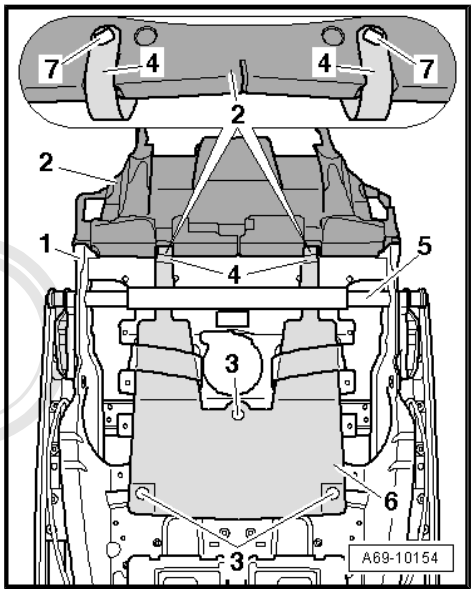

– The tabs -4- (2x) at the seat-occupied sensor mat -6- must be positioned above the cross-piece -5-.

– The anti-squeak pad must be laid without creases between the seat-occupied sensor mat -6- and the seat foam -2-.

– Position the pressure hose -1- in line with the mark -2- in the holder -3-.

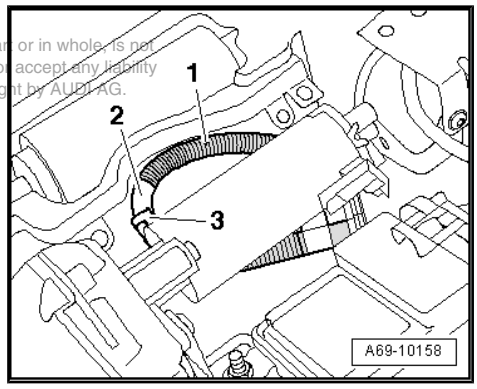

Protected by copyright. Copying for private or commercial purposes, in part or in whole, is not permitted unless authorised by AUDI AG. AUDI AG does not guarantee or accept any liability with respect to the correctness of information in this document. Copyright by AUDI AG.

– Route the cable from the seat occupied recognition control unit -J706- -5- as shown.

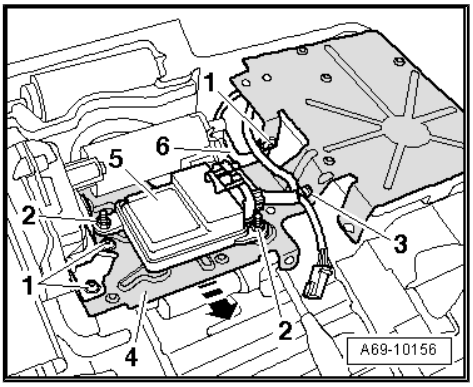

Note

In the original as-delivered vehicle condition, the cable runs beneath the holder -6-.

– Tighten the bolts -1- and the hexagon nuts -2- to torque ⇒ page 161 .

– When installing the seat pan padding, all upholstery clips must be attached/fitted at the old location:

WARNING

There must not be anyone in the vehicle when connecting the battery.

– With the ignition switched on, connect the battery earth wire ⇒ Electrical system; Rep. gr. 27 .

On installation of a new service kit and following repair work on the front passenger's seat involving »disengagement« of the seat and/or backrest cover, basic setting of the seat occupied recognition control unit must always be performed ⇒ page 99 .

– As a final step, select the function „Airbag“ in the „Guided fault-finding routine“ with the ⇒ Vehicle diagnostic tester.

This document is the property of AUDI AG. Reproduction in whole or in part or any other use of this document or its contents is not permitted without the express consent of AUDI AG. AUDI AG does not guarantee or accept any liability with respect to the correctness of information in this document. Copyright by AUDI AG.

♦ -J706 Seat occupied recognition control unit basic setting

Component	Nm
Bolt for seat occupied recognition control unit -J706-	2.5
Hexagon nut for seat occupied recognition control unit -J706-	2.5

9.2 Replacing rigid foam inserts

Damaged rigid foam inserts must be replaced.

– Remove the damaged rigid foam inserts -1- (2x).

– Clean the bonding surfaces in the area of the rigid foam inserts -1- (2x) at the seat pan -2-.

– Position the rigid foam inserts -1- (2x) at the extension of the beads -arrows- »flush with contours« on the seat pan -2-.

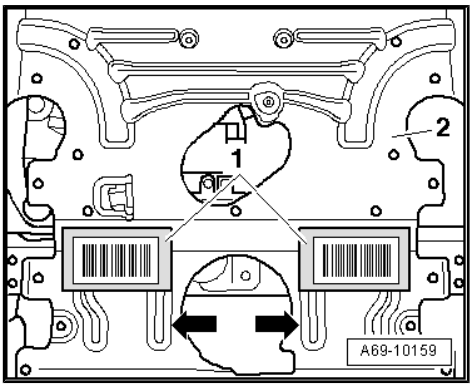

10 Deactivation of rear side airbag with fixed backrest

Block diagram

- ⇒ „10.1 Deactivation“, page 162
- ⇒ „10.2 Activation“, page 162

10.1 Deactivation

– Remove the rear seat bench ⇒ page 333 .

Note

The left and right side airbags can only be jointly deactivated. Individual side airbag deactivation is not possible.

– One connector each is provided on the left and right beneath the rear seat bench.

– Press the retainer tab -2- in arrow direction and unplug the connector -1-.

– Secure the loose connectors with cable ties.

Vehicles with no curtain airbag

– Remove the rear wheel housing trim ⇒ page 258 .

– Unplug the crash sensor connector at the C-pillar ⇒ page 169 .

– Install the rear seat bench ⇒ page 333 .

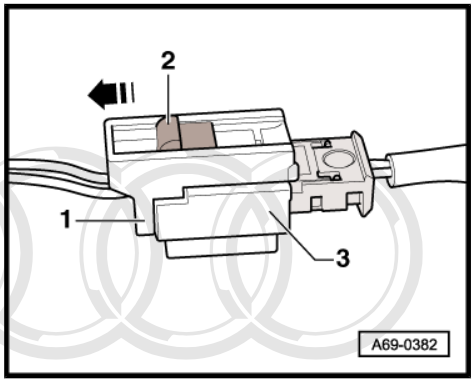

10.1.1 Rear side airbag deactivation stickers

– Affix the side airbag deactivation stickers -1- on the left and right of the frame -2- of the rear doors -arrow-.

– If local regulations require several stickers to be affixed, these are to be attached above the sticker shown.

– Alter the encoding of the airbag control unit to the option without rear side airbag ⇒ Vehicle diagnostic tester.

– Complete the registration card and forward it to the appropriate Regional Sales Centre or importer for recording purposes. Place Sheet 3 of the registration card in the customer's document wallet.

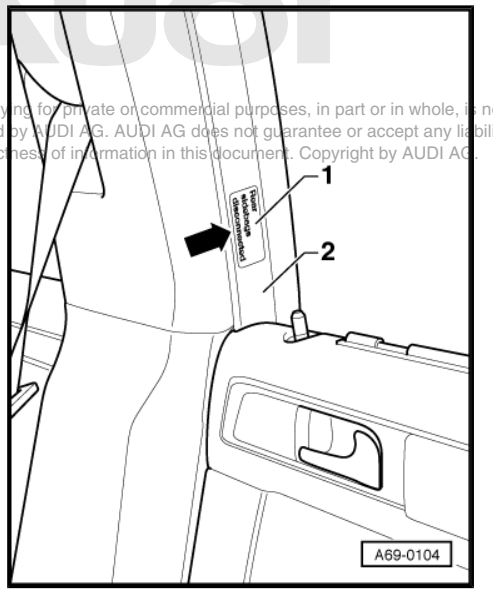

Protected by copyright. Copying for private or commercial purposes, in part or in whole, is not permitted unless authorised by AUDI AG. AUDI AG does not guarantee or accept any liability with respect to the correctness of information in this document. Copyright by AUDI AG.

10.2 Activation

– Remove the rear seat bench ⇒ page 333 .

Note

The left and right side airbags can only be jointly activated. Individual side airbag activation is not possible.

- One connector each is provided on the left and right beneath the rear seat bench.
- Cut through the connector cable ties.
- Fit the connector for the side airbag -1-.
- Remove the rear wheel housing trim ⇒ page 258 .
- Plug in the crash sensor connector at the C-pillar ⇒ page 169 .
- Install the rear wheel housing trim ⇒ page 258 .
- Install the rear seat bench ⇒ page 333 .
- Remove the side airbag deactivation stickers from the rear door frames.
- Use cleaning agent to remove any residual adhesive from the door frames.
- Alter the encoding of the airbag control unit to the option with rear side airbag ⇒ Vehicle diagnostic tester.
- Complete the registration card and forward it to the appropriate Regional Sales Centre or importer for recording purposes. Remove Sheet 3 of the registration card from the customer's document wallet.

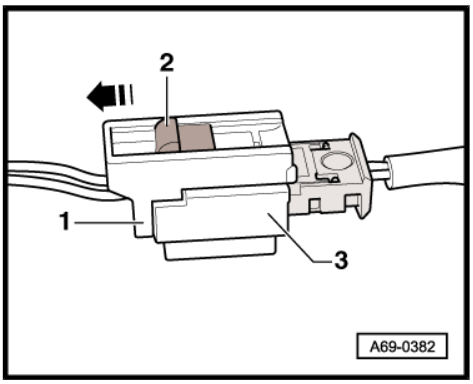

Protected by copyright. Copying for private or commercial purposes, in part or in whole, is not permitted unless authorised by AUDI AG. AUDI AG does not guarantee or accept any liability with respect to the correctness of information in this document. Copyright by AUDI AG.

11 Deactivation of rear side airbag with individual electrically operated rear seats

Block diagram

- ⇒ „11.1 Deactivation“, page 164
- ⇒ „11.2 Activation“, page 164

11.1 Deactivation

– Remove the seat pan ⇒ page 342 .

Note

- *The left and right side airbags can only be jointly deactivated. Individual side airbag deactivation is not possible.*
- *One connector each is provided on the left and right on the sill panel side of the seat frame.*

– Press the retainer tab -2- and unplug the connector -1-.

– Secure the loose connectors with cable ties.

Vehicles with no curtain airbag

– Remove the rear wheel housing trim ⇒ page 258 .

– Unplug the crash sensor connector at the C-pillar ⇒ page 169 .

All vehicles

– Install the seat pan ⇒ page 342 .

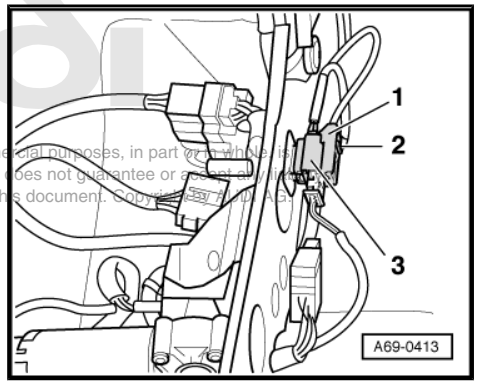

Protected by copyright. Copying for private or commercial purposes, in part or in whole, is not permitted unless authorised by AUDI AG. AUDI AG does not guarantee or assume any liability with respect to the correctness of information in this document. Copyright by AUDI AG.

11.1.1 Rear side airbag deactivation stickers

– Affix the side airbag deactivation stickers -1- on the left and right of the frame -2- of the rear doors -arrow-.

– If local regulations require several stickers to be affixed, these are to be attached above the sticker shown.

– Alter the encoding of the airbag control unit to the option without rear side airbag ⇒ Vehicle diagnostic tester.

– Complete the registration card and forward it to the appropriate Regional Sales Centre or importer for recording purposes. Place Sheet 3 of the registration card in the customer's document wallet.

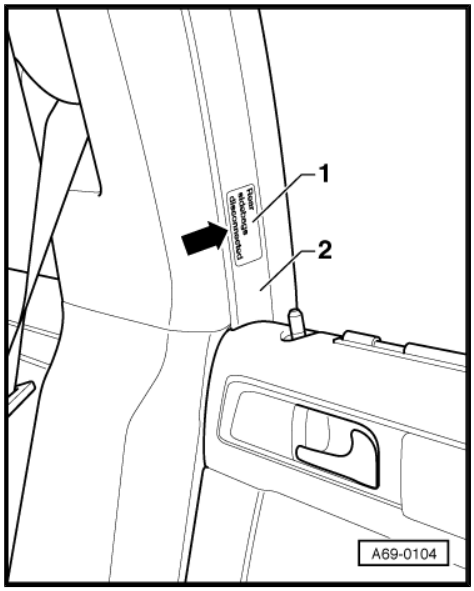

11.2 Activation

– Remove the seat pan ⇒ page 342 .

Note

- *The left and right side airbags can only be jointly activated. Individual side airbag activation is not possible.*
- *One connector each is provided on the left and right on the sill panel side of the seat frame.*

– Cut through the connector cable ties.

– Fit the connector for the side airbag -1-.

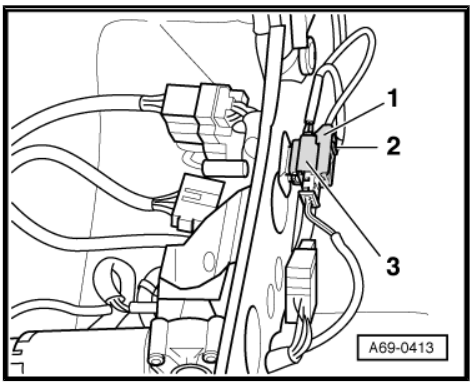

Vehicles with no curtain airbag

– Remove the rear wheel housing trim ⇒ page 258 .

– Fit the crash sensor connector at the C-pillar ⇒ page 169 .

– Install the rear wheel housing trim ⇒ page 258 .

All vehicles

– Remove the seat pan ⇒ page 342 .

– Remove the side airbag deactivation stickers from the rear door frames.

– Use cleaning agent to remove any residual adhesive from the door frames.

– Alter the encoding of the airbag control unit to the option with rear side airbag ⇒ Vehicle diagnostic tester.

– Complete the registration card and forward it to the appropriate Regional Sales Centre or importer for recording purposes. Remove Sheet 3 of the registration card from the customer's document wallet.

Protected by copyright. Copying for private or commercial purposes, in part or in whole, is not permitted unless authorised by AUDI AG. AUDI AG does not guarantee or accept any liability with respect to the correctness of information in this document. Copyright by AUDI AG.

12 Servicing airbag crash sensors

Block diagram

- ⇒ „12.1 Removing and installing front airbag crash sensor“, page 166
- ⇒ „12.2 Removing and installing front side airbag crash sensor“, page 168
- ⇒ „12.3 Removing and installing rear side airbag (curtain airbag) crash sensor“, page 169

12.1 Removing and installing front airbag crash sensor

Special tools and workshop equipment required

- Torque wrench -V.A.G 1410-

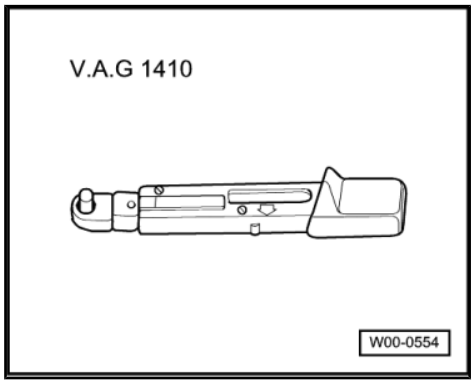

Protected by copyright. Copying for private or commercial purposes, in part or in whole, is not permitted unless authorised by AUDI AG. AUDI AG does not guarantee or accept any liability with respect to the correctness of information in this document. Copyright by AUDI AG.

1 - Front airbag crash sensor

♦ Removing

> ⚠ **WARNING**
> *Heed the safety regulations for pyrotechnic components ⇒ page 94 .*

– With the ignition switched on, disconnect the battery earth wire ⇒ Electrical system; Rep. gr. 27 .
– Remove the bumper ⇒ Rep. gr. 63 .

> ℹ **Note**
>
> *On the 3l TDI, the crash sensor on the left in the direction of travel is concealed by the air conditioner dryer cylinder. On the 3l TDI move the lock carrier to the service position to gain access to the crash sensor. ⇒ Rep. gr. 50*

– Release the tab at the yellow connector and unplug the connector.
– Unscrew the bolts -2- (2x).
– Detach the crash sensor -1-.

♦ Installing

– Install the crash sensor -1- in reverse order of removal.

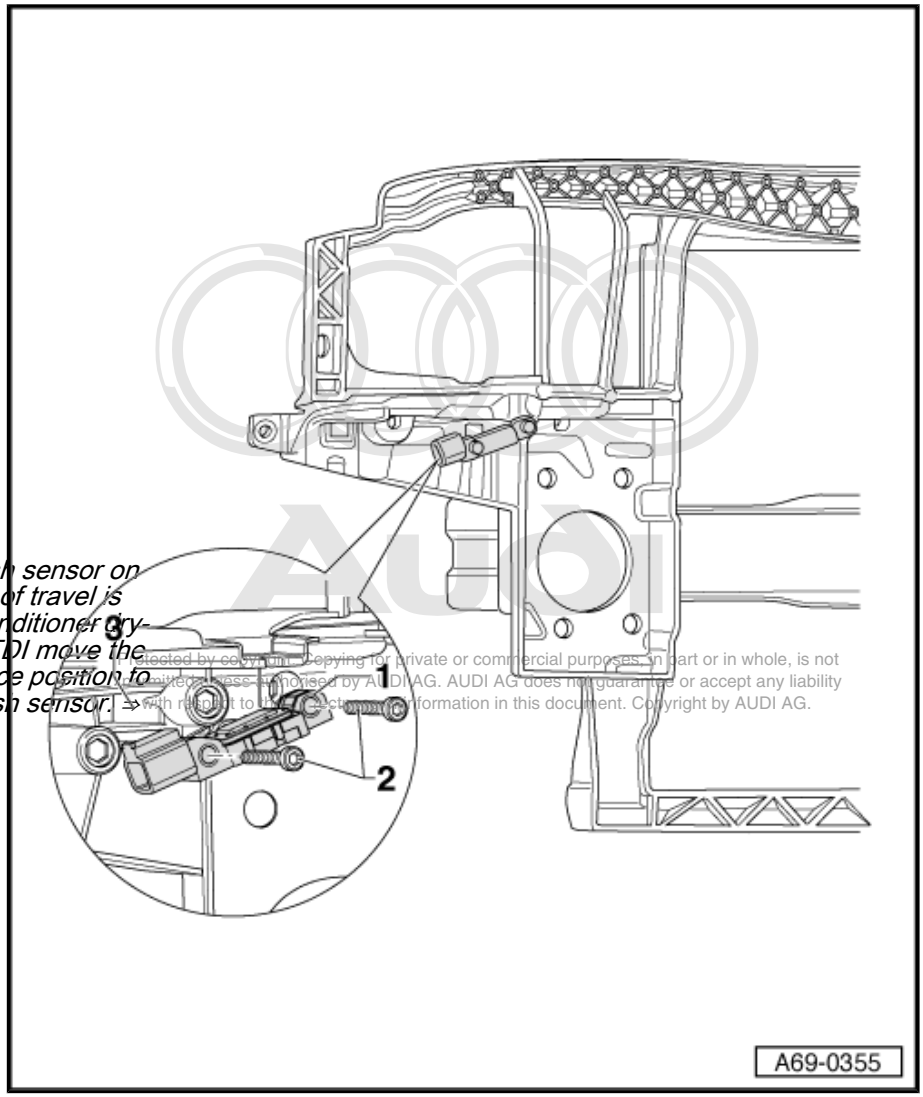

Protected by copyright. Copying for private or commercial purposes, in part or in whole, is not permitted unless authorised by AUDI AG. AUDI AG does not guarantee or accept any liability with respect to the correctness of information in this document. Copyright by AUDI AG.

> ⚠ **WARNING**
> *There must not be anyone in the vehicle when connecting the battery.*

– With the ignition switched on, connect the battery earth wire ⇒ Electrical system; Rep. gr. 27 .

> ℹ **Note**
>
> *If the airbag warning lamp -K75- indicates a fault following installation, the event recorder must be interrogated, erased and interrogated again ⇒ Vehicle diagnostic tester.*

2 - Bolts (2x)

❑ Tightening torque 9 Nm

3 - Lock carrier

12.2 Removing and installing front side air-bag crash sensor

Special tools and workshop equipment required

♦ Torque wrench -V.A.G 1410-

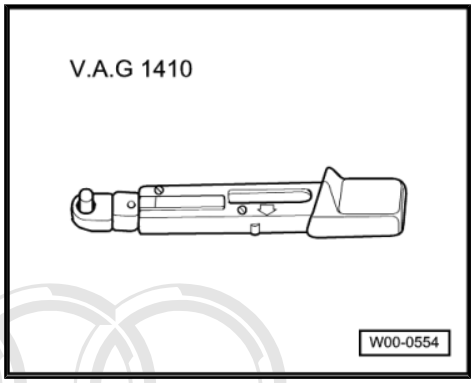

♦ Removing

> ⚠ **WARNING**
>
> *Heed the safety regulations for pyrotechnic components ⇒ page 94 .*

– With the ignition switched on, disconnect the battery earth wire ⇒ Electrical system; Rep. gr. 27 .

Protected by copyright. Copying for private or commercial purposes, in part or in whole, is not permitted unless authorised by AUDI AG. AUDI AG does not guarantee or accept any liability with respect to the correctness of information in this document. Copyright by AUDI AG.

– Remove the lower B-pillar trim ⇒ page 256 .

– Unfasten the reel. Complete seat belt removal is not necessary ⇒ page 107 .

– Unscrew the nuts -2- (2x).

– Release the tab at the yellow connector -1- and unplug the connector.

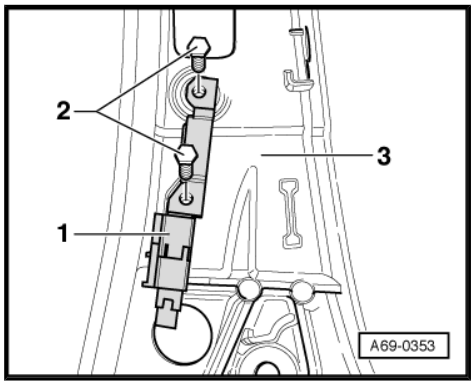

♦ Installing

– Position the crash sensor -1- on the threaded pins.
– Secure the crash sensor -1- with the nuts -2- (2x).
♦ Tightening torque 9 Nm.

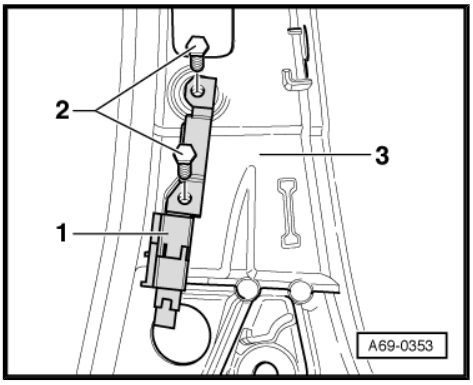

> ⚠ **WARNING**
>
> *There must not be anyone in the vehicle when connecting the battery.*

– With the ignition switched on, connect the battery earth wire ⇒ Electrical system; Rep. gr. 27 .

Note

If the airbag warning lamp -K75- indicates a fault following installation, the event recorder must be interrogated, erased and interrogated again ⇒ Vehicle diagnostic tester.

12.3 Removing and installing rear side airbag (curtain airbag) crash sensor

Special tools and workshop equipment required

♦ Torque wrench -V.A.G 1410-

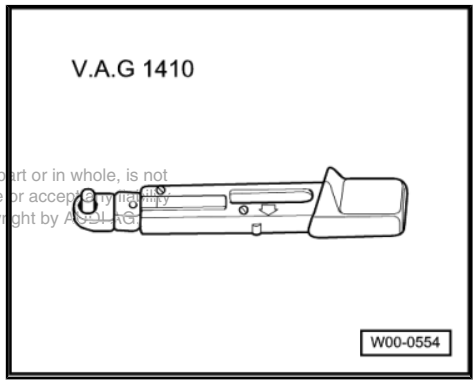

Protected by copyright. Copying for private or commercial purposes, in part or in whole, is not permitted unless authorised by AUDI AG. AUDI AG does not guarantee or accept any liability with respect to the correctness of information in this document. Copyright by AUDI AG.

♦ Removing

> ⚠ **WARNING**
>
> *Heed the safety regulations for pyrotechnic components* *⇒ page 94* *.*

– With the ignition switched on, disconnect the battery earth wire ⇒ Electrical system; Rep. gr. 27 .
– Remove the rear wheel housing trim ⇒ page 258 .

– Unscrew the bolts -2- (2x).
– Release the tab at the yellow connector and unplug the connector.

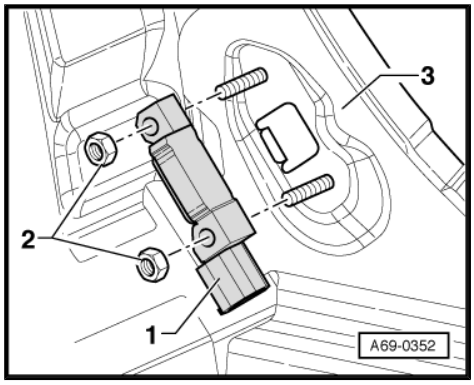

♦ Installing
– Position the crash sensor -1- on the threaded pins.
– Secure the crash sensor -1- with the nuts -2- (2x).
♦ Tightening torque 9 Nm.

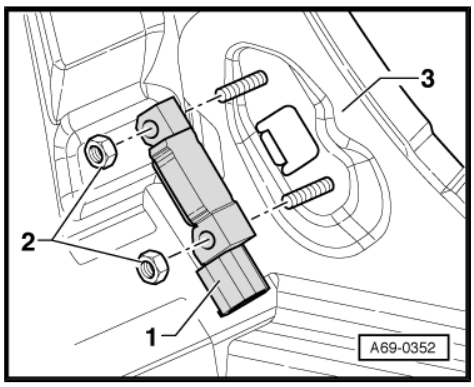

WARNING

There must not be anyone in the vehicle when connecting the battery.

– With the ignition switched on, connect the battery earth wire ⇒ Electrical system; Rep. gr. 27 .

Note

If the airbag warning lamp -K75- indicates a fault following installation, the event recorder must be interrogated, erased and interrogated again ⇒ Vehicle diagnostic tester.

Protected by copyright. Copying for private or commercial purposes, in part or in whole, is not permitted unless authorised by AUDI AG. AUDI AG does not guarantee or accept any liability with respect to the correctness of information in this document. Copyright by AUDI AG.

13 Removing and installing ISOFIX holder

Block diagram

- ⇒ „13.1 Rear ISOFIX holder with fixed rear seat backrest“, page 171
- ⇒ „13.2 Removing and installing rear ISOFIX holder with electrically operated individual seats“, page 173

13.1 Rear ISOFIX holder with fixed rear seat backrest

13.1.1 Removing and installing outer ISOFIX holder

Special tools and workshop equipment required

d by copyright. Copying for private or commercial purposes, in part or in whole, is not permitted unless authorised by AUDI AG. AUDI AG does not guarantee or accept any liability with respect to the correctness of information in this document. Copyright by AUDI AG.

- Torque wrench -V.A.G 1331-

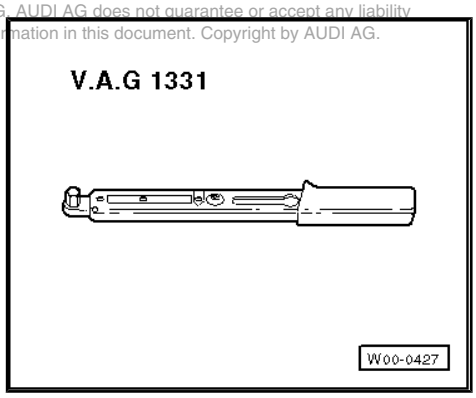

- Torque wrench -V.A.G 1332-

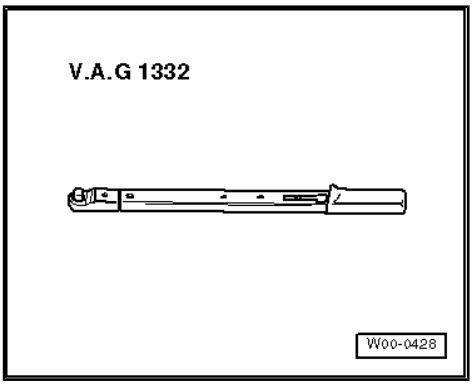

Removing

– Remove the rear seat bench ⇒ page 333 .
– Screw out the bolts -2- and -3-.
– Take out the ISOFIX holder -1-.

4 - Rear seat backrest

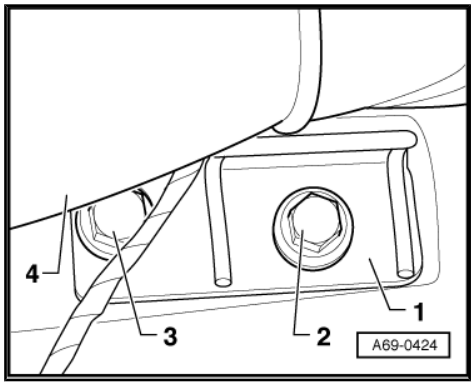

Installing

Install in reverse order, paying attention to the following:

– Replace the bolts if the ISOFIX holder was removed as part of servicing work following an accident

Tightening torques

♦ Bolt -2-: 40 Nm
♦ Bolt -3-: 55 Nm

13.1.2 Removing and installing centre ISOFIX holder

Special tools and workshop equipment required

♦ Torque wrench -V.A.G 1331-

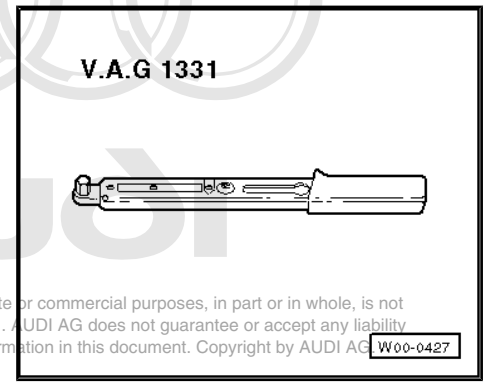

Protected by copyright. Copying for private or commercial purposes, in part or in whole, is not permitted unless authorised by AUDI AG. AUDI AG does not guarantee or accept any liability with respect to the correctness of information in this document. Copyright by AUDI AG

♦ Torque wrench -V.A.G 1332-

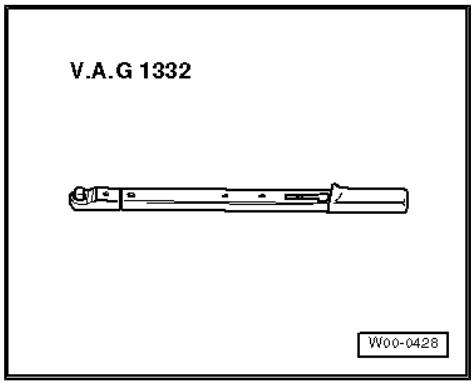

Removing

– Remove the rear seat bench ⇒ page 333 .
– Screw out the bolt -4-.
– Detach the buckle.
– Screw out the bolt -5-.
– Take out the ISOFIX holder -1-.

2 - Rear seat backrest

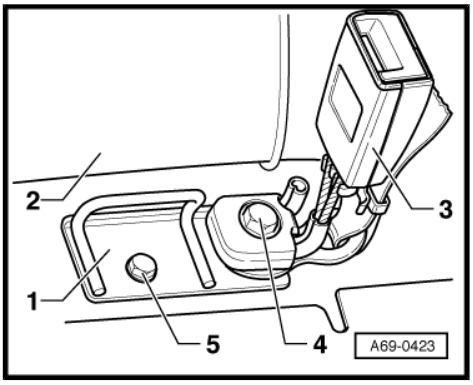

Installing

Install in reverse order, paying attention to the following:

– Pay attention to the position of the locating pin on fitting the buckle.
– Replace the bolts if the ISOFIX holder was removed as part of servicing work following an accident

Tightening torques

♦ Bolt -4-: 55 Nm
♦ Bolt -5-: 40 Nm

13.2 Removing and installing rear ISOFIX holder with electrically operated individual seats

– Remove the seat pan ⇒ page 342 .

Outer ISOFIX holder -4-

– Unscrew the bolt -2-. 40 Nm.
– Unscrew the bolt -3-. 55 Nm.
– Take out the ISOFIX holder -4-.

Centre ISOFIX holder -1-

– Unscrew the bolt -2-. 40 Nm.
– Unscrew the bolt -3-. 55 Nm.
– Slacken off the front inner bolt of the electrically operated individual seats by a few turns.
– Pull out the ISOFIX holder -1- beneath the electrically operated individual seat.
– On installation, slide the ISOFIX holder -1- beneath the electrically operated individual seat.
– The electrically operated individual seat and ISOFIX holder -1- are screwed together using the bolt -3-.

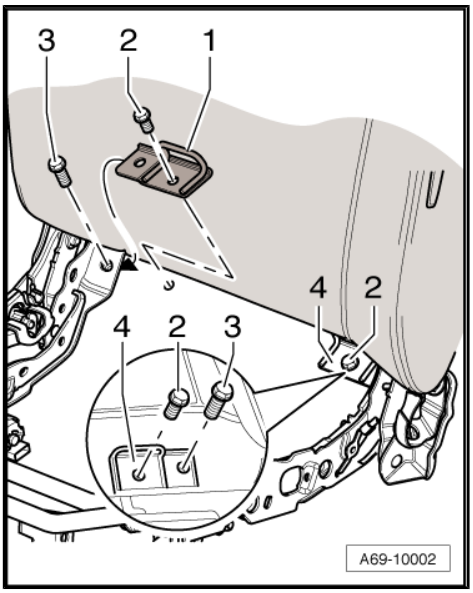

Protected by copyright. Copying for private or commercial purposes, in part or in whole, is not permitted unless authorised by AUDI AG. AUDI AG does not guarantee or accept any liability with respect to the correctness of information in this document. Copyright by AUDI AG.

14 Child seat anchor (USA, Canada)

14.1 Removing and installing child seat anchor

Special tools and workshop equipment required

- Torque wrench -V.A.G 1331-

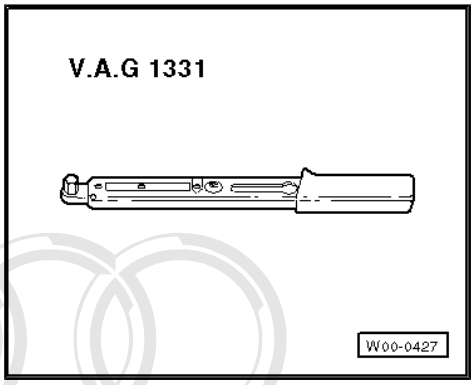

1 - Outer trim cap

- ❑ Pull out of rear shelf
- ❑ To install, place in position at rear and press downwards at front

2 - Anchor

- ♦ Removing
  - – Screw out the bolt -3-.
  - – Take out the anchor.
- ♦ Installing

Install in reverse order.

3 - Bolt, 23 Nm

4 - Spacer sleeve

5 - Holder

- ❑ For centre anchor

6 - Rear shelf cross member

7 - Centre trim cap

- ❑ Pull out of rear shelf
- ❑ To install, place in position at rear and press downwards at front

8 - Rear shelf

9 - Holder

- ❑ For outer anchor

10 - Bolt, 23 Nm

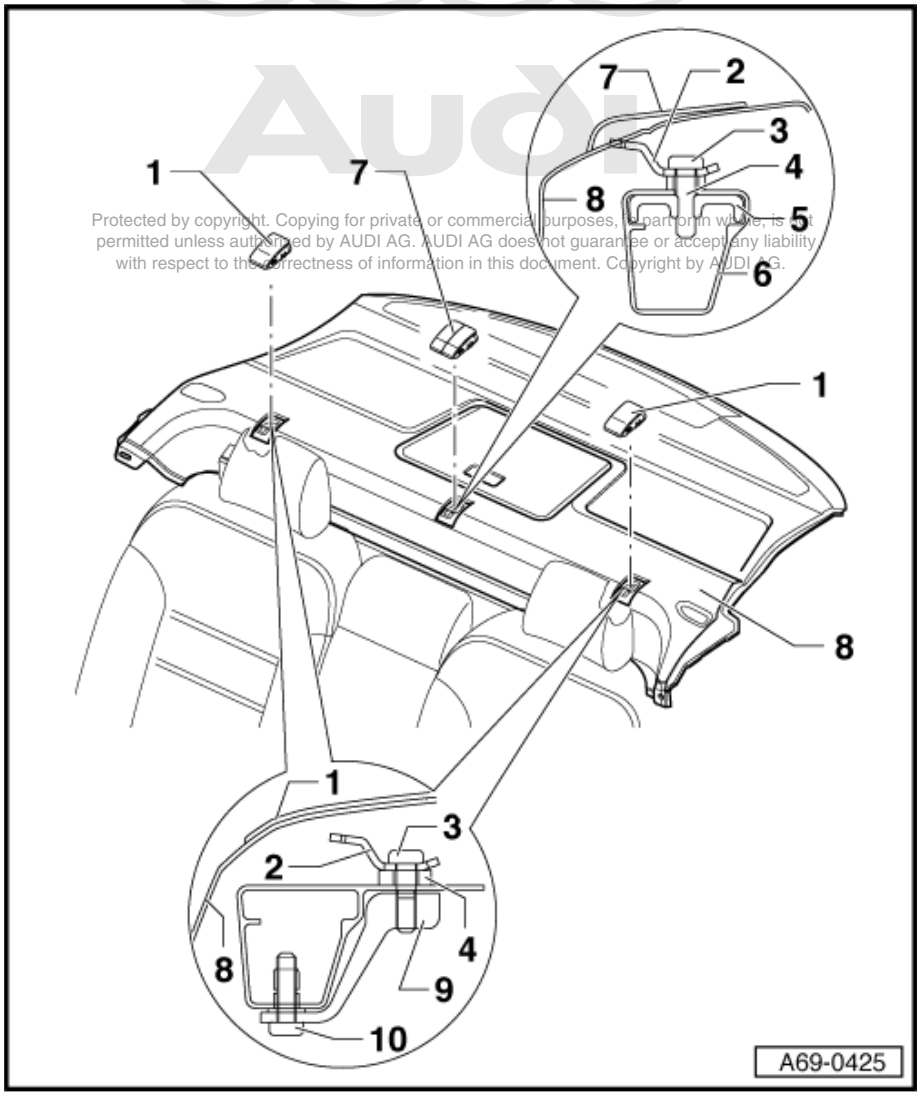

Protected by copyright. Copying for private or commercial purposes, in part or in whole, is not permitted unless authorised by AUDI AG. AUDI AG does not guarantee or accept any liability with respect to the correctness of information in this document. Copyright by AUDI AG.

70 – Trim, insulation

1 Front door trim panels

1.1 Exploded view of fitting locations

1 - Removing and installing insulation ⇒ page 181

2 - Removing and installing door trim ⇒ page 176

3 - Removing and installing trim panel ⇒ page 178

4 - Removing and installing interior door handle with central locking system switch ⇒ page 184

5 - Removing and installing mirror adjustment switch ⇒ page 184

6 - Removing and installing filler neck compartment lid/rear lid release switch ⇒ page 187

7 - Removing and installing exit light ⇒ page 185

8 - Removing and installing window regulator switch module ⇒ page 183

9 - Removing and installing hinged pocket with mount ⇒ page 185

10 - Removing and installing armrest ⇒ page 182

11 - Removing and installing door warning light ⇒ page 185

12 - Removing and installing interior monitor switch module ⇒ page 185

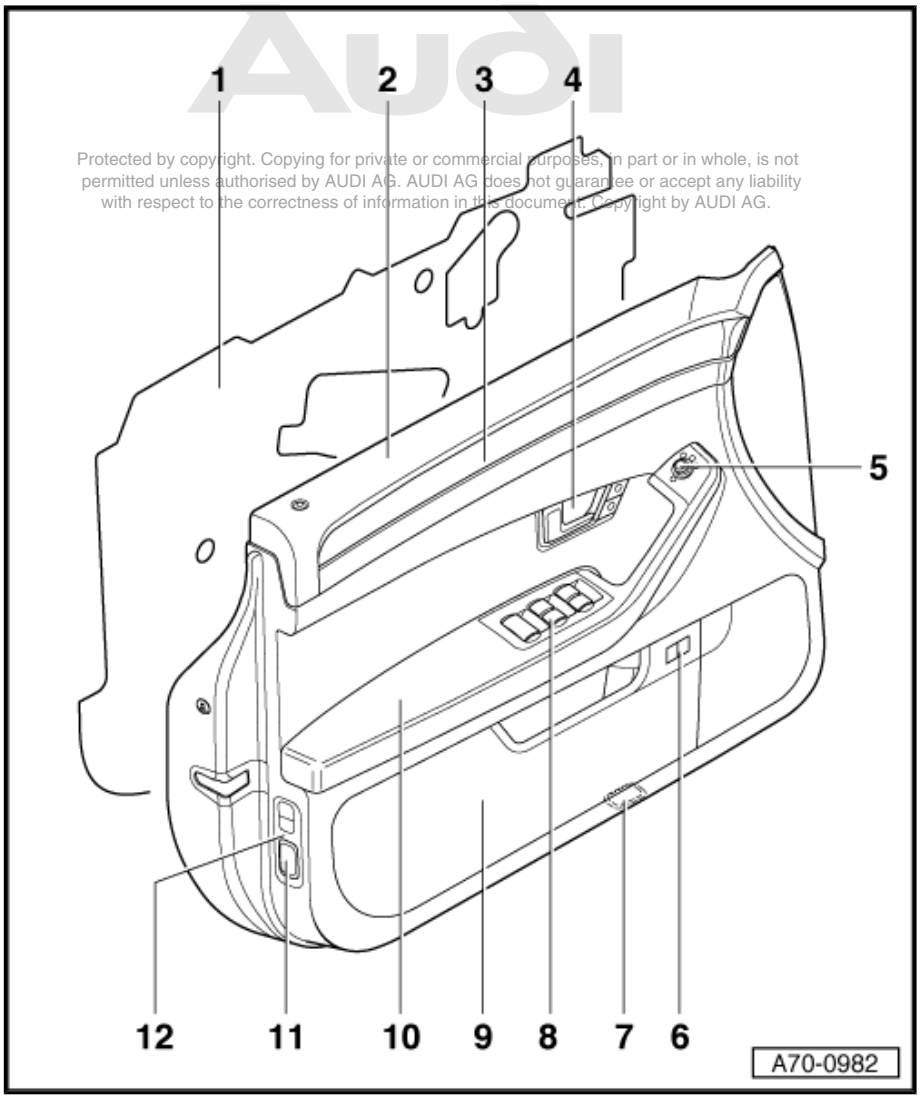

Protected by copyright. Copying for private or commercial purposes, in part or in whole, is not permitted unless authorised by AUDI AG. AUDI AG does not guarantee or accept any liability with respect to the correctness of information in this document. Copyright by AUDI AG.

1.2 Exploded view of door trim cable routing

1 - Cable to central locking switch (driver side only)

2 - Cable to interior door handle light

3 - Cable to mirror adjustment switch

4 - Cable to window regulator switch

5 - Connector for window regulator switch module and mirror adjustment switch

6 - Cable to anti-theft alarm system lighting

7 - Cable to interior monitor switch module

8 - Cable to door warning light

9 - Cable to exit light

10 - Cable to window regulator control unit cable

11 - Filler neck compartment lid/rear lid release switch module connector

12 - Cable to filler neck compartment lid/rear lid release switch module

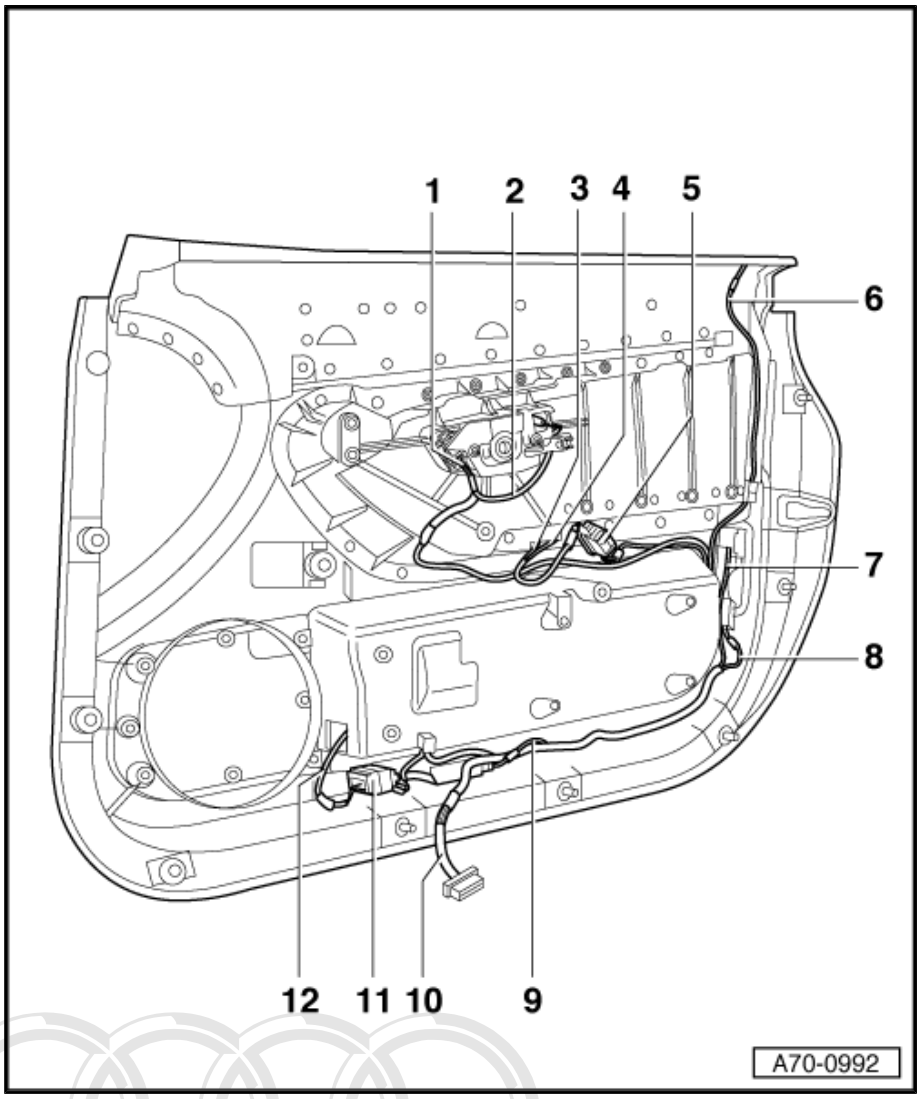

1.3 Removing and installing front door trim

Special tools and workshop equipment required

- Torque wrench -V.A.G 1410-

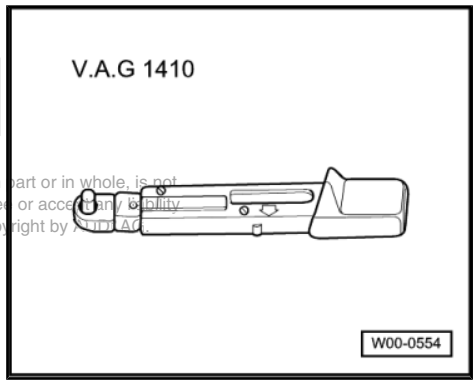

Protected by copyright. Copying for private or commercial purposes, in part or in whole, is not permitted unless authorised by AUDI AG. AUDI AG does not guarantee or accept any liability with respect to the correctness of information in this document. Copyright by AUDI AG

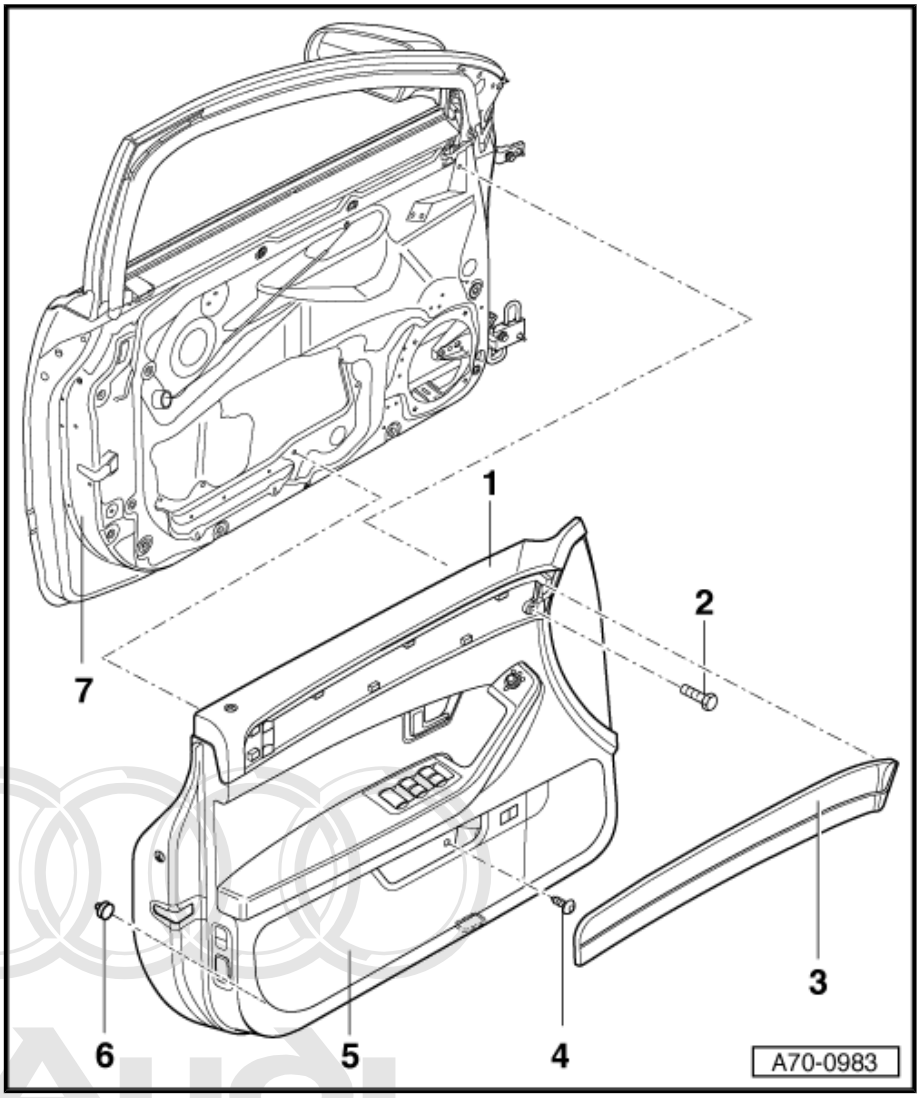

1 - Door trim

♦ Removing

– Remove the trim panel -3- ⇒ page 178 .
– Unscrew the bolt -2-.
– Close the hinged pocket -5-.
– Unscrew the bolt -4-.
– Starting at the bottom, unfasten the door trim -1- at the clips -6- (8x).
– Disengage the Bowden cable for the interior door handle ⇒ page 177
– Unplug the connector at the window regulator control unit ⇒ page 178 .

♦ Installing

– Make sure all the clips -6- are in position on the back of the door trim. Replace damaged clips ⇒ page 178

– Install the door trim -1- in the reverse order of removal.

2 - Bolt

❑ Tightening torque 4 Nm.

3 - Trim panel

4 - Bolt

❑ Tightening torque 4 Nm.

5 - Hinged pocket with mount

6 - Clips (8x)

7 - Door shell

Protected by copyright. Copying for private or commercial purposes, in part or in whole, is not permitted unless authorised by AUDI AG. AUDI AG does not guarantee or accept any liability with respect to the correctness of information in this document. Copyright by AUDI AG.

Disengaging Bowden cable for interior door handle

– Pull the Bowden cable -2- out of the guide -1-.

– Disengage the hook -3-.

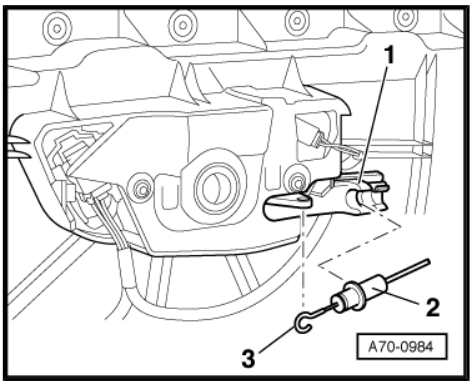

Connector at window regulator control unit

– Unfasten the securing clip -2- and unplug the connector -3- in arrow direction from the control unit -1-.

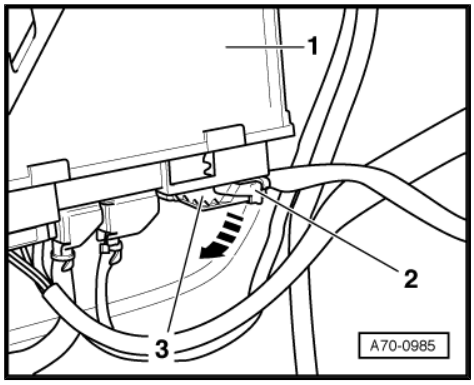

Door trim securing clip

– Press the retainer tab -2- and pull out the clip -1- in arrow direction.

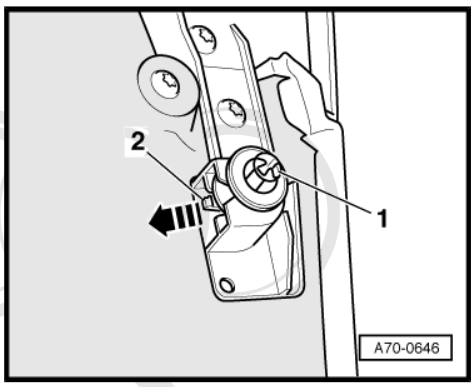

1.4 Removing and installing trim panel

♦ Removing

– Carefully prise out the trim panel -1- in arrow direction.

– Pull off the trim panel -1- to the front.

♦ Installing

– Install the trim panel -1- in the reverse order of removal.

Copyright. Copying for private or commercial purposes, in part or in whole, is not permitted unless authorised by AUDI AG. AUDI AG does not guarantee or assume any liability with respect to the correctness of information in this document. Copyright by AUDI AG.

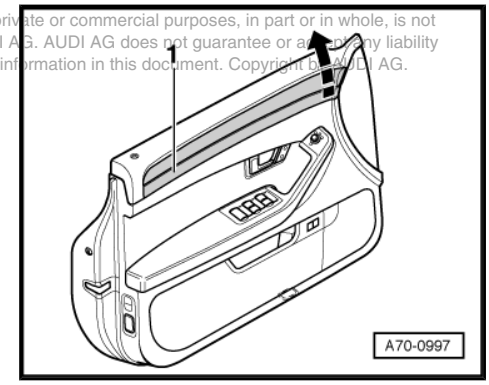

1.5 Replacing front door trim decorative trim

Special tools and workshop equipment required

♦ Removal wedge -3409-

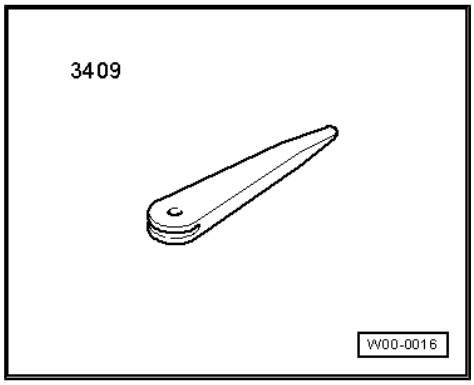

Removing wooden trim

– By prising out with the removal wedge -3409- , unclip the wooden trim -1- from front to rear from the door trim.

– To do so, apply the removal wedge -3409- as shown between the door trim -3- and the decorative trim -2-.

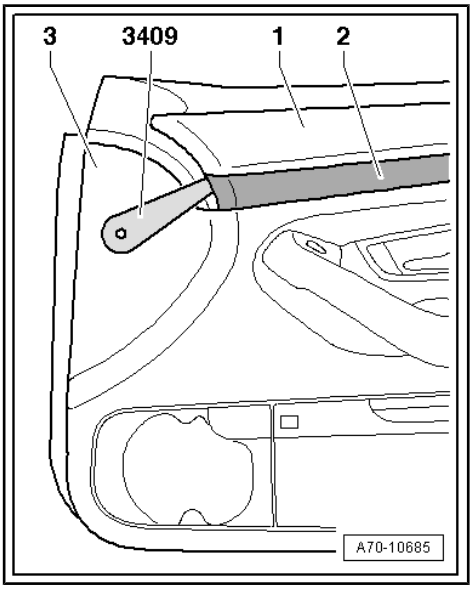

Shearing off retainers at decorative trim

– Place the wooden trim -4- on a suitable soft surface.

> ⚠ **Caution**
>
> ***Take care to avoid scratches and damage on the visible side of the wooden trim.***

– Cut off the retainers -2- on the back of the decorative trim directly above the ring clips -3-.

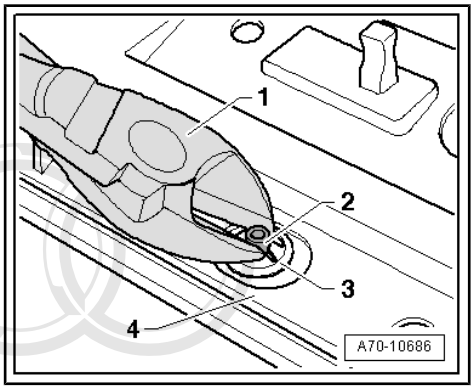

Removing ring clips

– Prise the ring clips -2- off the wooden trim -3-.

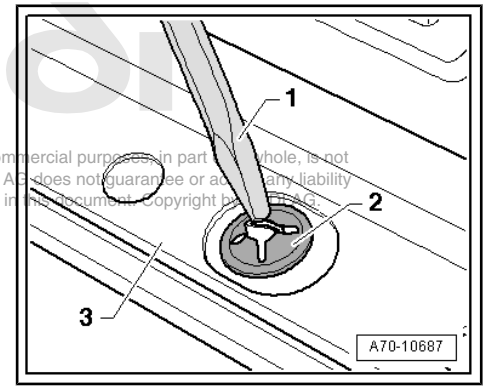

Protected by copyright. Copying for private or commercial purposes, in part or whole, is not permitted unless authorised by AUDI AG. AUDI AG does not guarantee or accept any liability with respect to the correctness of information in this document. Copyright by AUDI AG.

Detaching decorative trim

– Carefully pull the decorative trim -2- off the wooden trim holder -1-.

The decorative trim is fixed in position with double-sided adhesive tape.

– Remove the old double-sided adhesive tape from the holder of the wooden trim -1-.

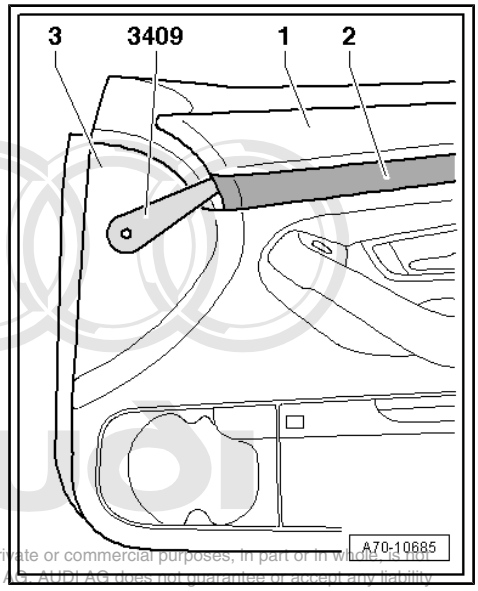

Protected by copyright. Copying for private or commercial purposes, in part or in whole, is not permitted unless authorised by AUDI AG. AUDI AG does not guarantee or accept any liability with respect to the correctness of information in this document. Copyright by AUDI AG.

Fitting new decorative trim

– Insert the decorative trim in the holder.

> ⚠ **Caution**
>
> ***Always use new double-sided adhesive tape.***

– Bond the new double-sided adhesive tape onto the holder of the wooden trim -1-.

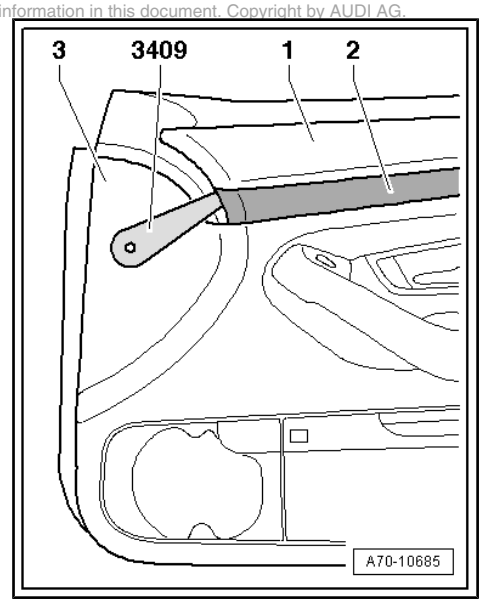

Securing decorative trim

Position the ring clips -3- on the retainers -2-.

Press the ring clips -3- onto the retainers -2-.

4 - Wooden trim with trim holder

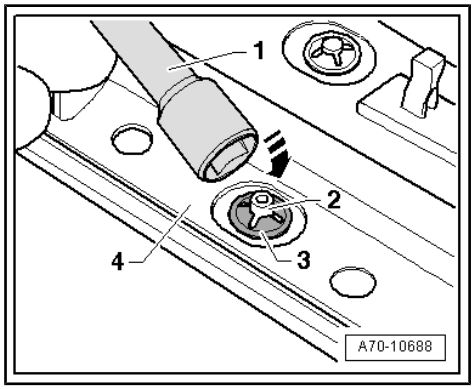

Inserting wooden trim in door trim

– Insert the wooden trim -2- with the fasteners -arrows- in the door trim -1-.

– Starting from the rear and working forwards, engage the wooden trim in the clips and press on to secure.

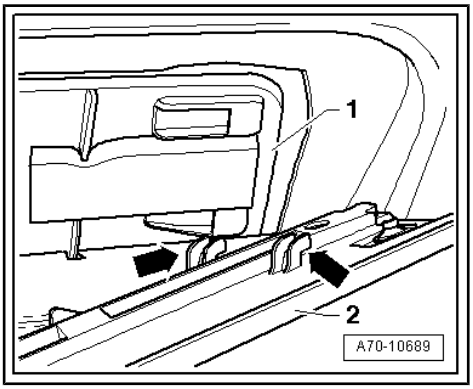

1.6 Removing and installing insulation

1 - Insulation

♦ Removing

– Remove the door trim ⇒ page 176 and ⇒ page 176 .
– Unscrew the holders -2- (3x).
– Use a screwdriver to prise off the circlips -3- (2x).
– Detach the insulation -1-.

♦ Installing

– Install the insulation -1- in the reverse order of removal.

2 - Holder (3x)

3 - Circlips (2x)

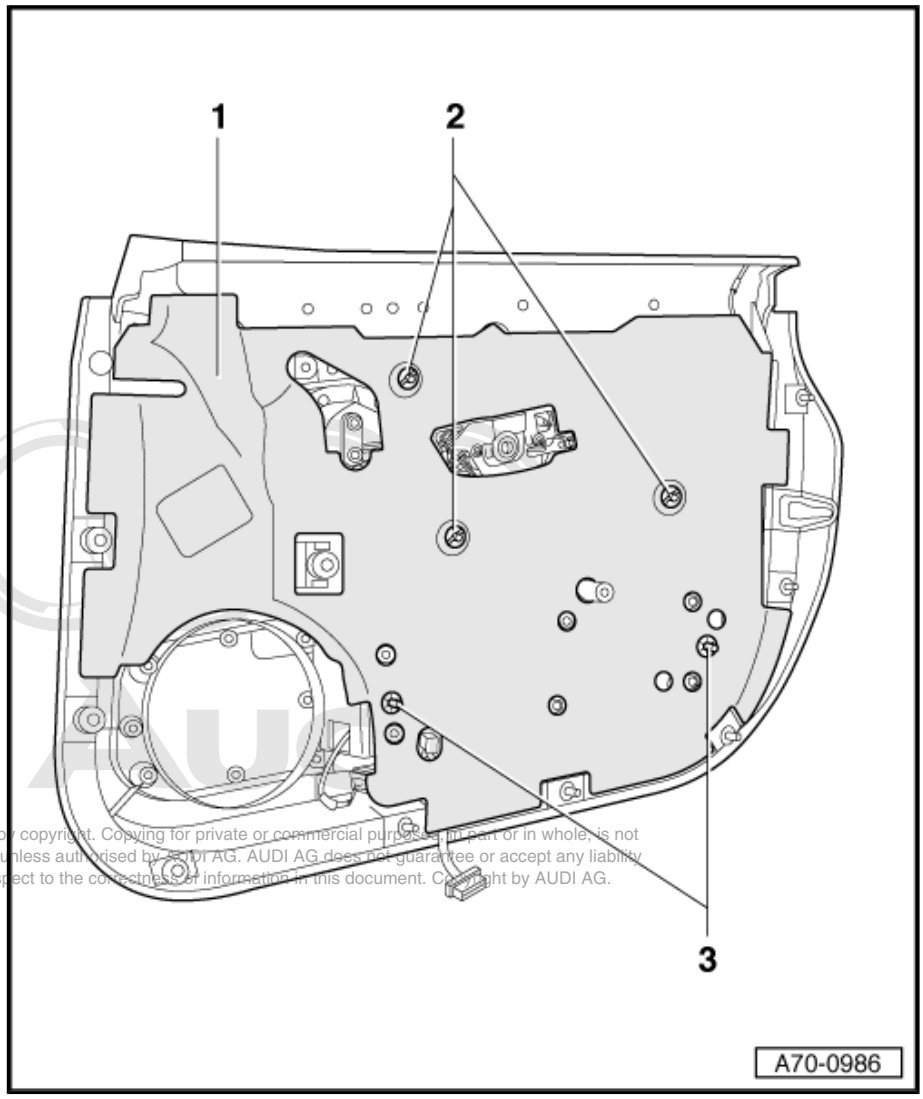

Protected by copyright. Copying for private or commercial purposes, in part or in whole, is not permitted unless authorised by AUDI AG. AUDI AG does not guarantee or accept any liability with respect to the correctness of information in this document. Copyright by AUDI AG.

1.7 Removing and installing armrest

1 - Armrest

- Removing
  - Remove the door trim ⇒ page 176 and ⇒ page 176 .
  - Remove the insulation ⇒ page 176 and ⇒ page 181 .
  - Unscrew the bolts -4- (2x).
  - Unscrew the bolts -3- (9x).
  - Unclip the connector guide -5- from the door trim -2-.
  - Unplug the connector -6-.
  - Detach the connector guide -5- from the connector -6-.
  - Detach the armrest -1-.
- Installing
  - Install the armrest -1- in the reverse order of removal.

2 - Door trim

3 - Bolts (9x)

4 - Bolts (2x)

5 - Connector guide

6 - Connector for window regulator switch module and mirror adjustment switch

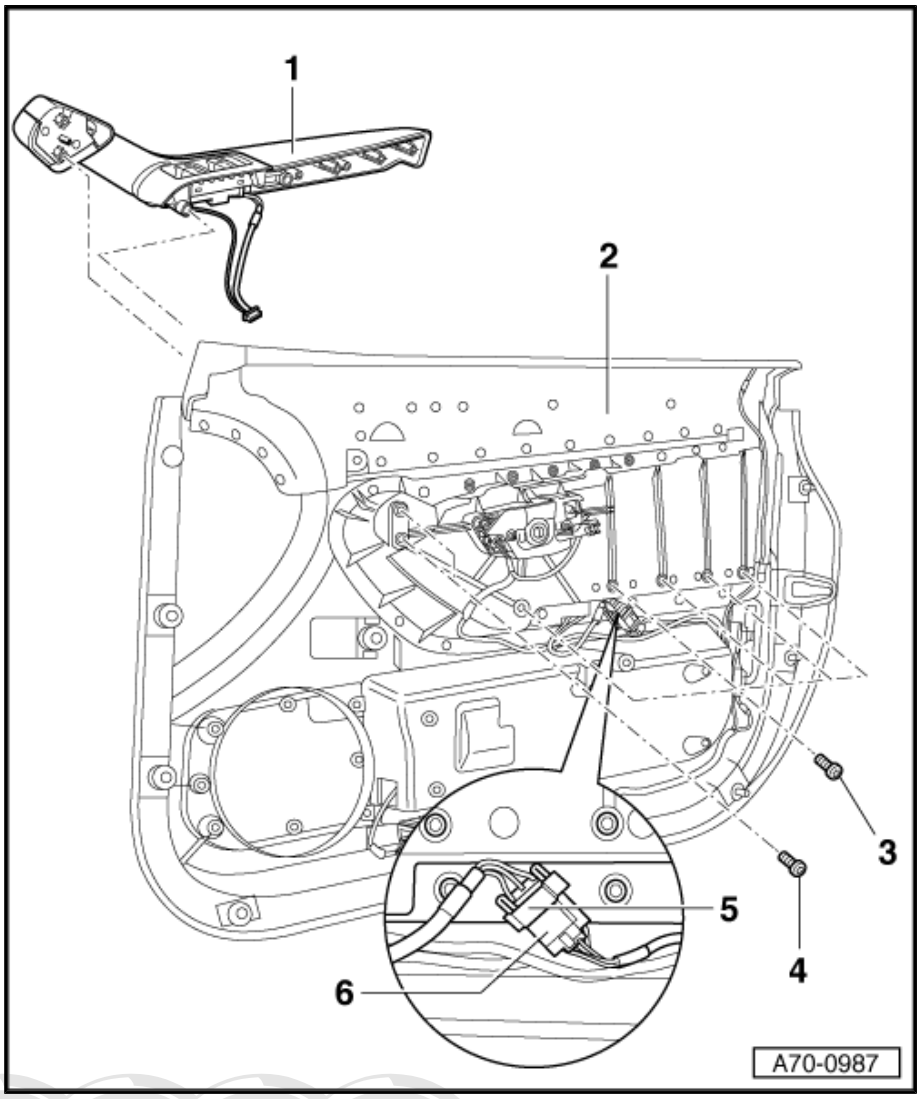

Protected by copyright. Copying for private or commercial purposes, in part or in whole, is not permitted unless authorised by AUDI AG. AUDI AG does not guarantee or accept any liability with respect to the correctness of information in this document. Copyright by AUDI AG.

1.8 Removing and installing window regulator switch module

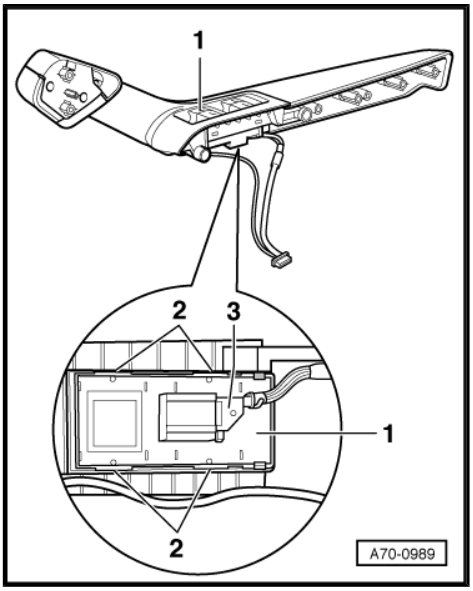

- ♦ Removing
- – Remove the door trim ⇒ page 176 .
- – Remove the insulation ⇒ page 176 and ⇒ page 181 .
- – Remove the armrest ⇒ page 182 .
- – Use a screwdriver to prise out the window regulator switch module -1- at the locations marked -2- (4x).
- – Unplug the connector -3-.
- ♦ Installing
- – Install the window regulator switch module -1- in the reverse order of removal.

1.9 Dismantling armrest

Special tools and workshop equipment required

- ♦ Torque wrench -V.A.G 1783/-

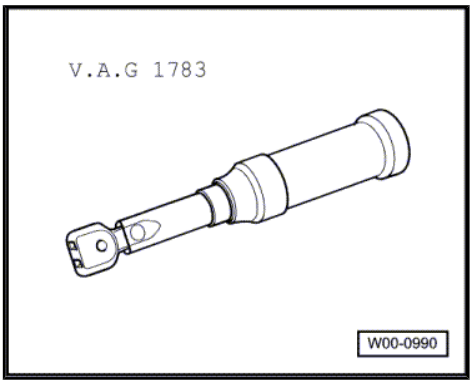

Reproduction or copying of this document in any form or for commercial purposes, in part or in whole, is not permitted unless authorised by AUDI AG. AUDI AG does not guarantee or accept any liability with respect to the correctness of information in this document. Copyright by AUDI AG.

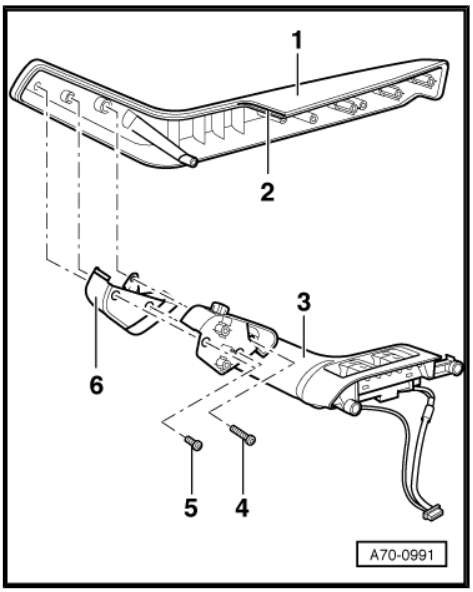

- – Remove the door trim ⇒ page 176 .
- – Remove the insulation ⇒ page 176 and ⇒ page 181 .
- – Remove the armrest ⇒ page 182
- – Unscrew the bolts -5- (2x).
- ♦ Tightening torque 2 Nm.
- – Unscrew the bolt -4-.
- ♦ Tightening torque 2 Nm.
- – Pull the front section -3- of the armrest -1- out of the guide -2-.
- – Push down the cover -6- to the rear.
- ♦ Installing
- – Assemble the armrest in the reverse order of removal.

1.10 Removing and installing mirror adjustment switch

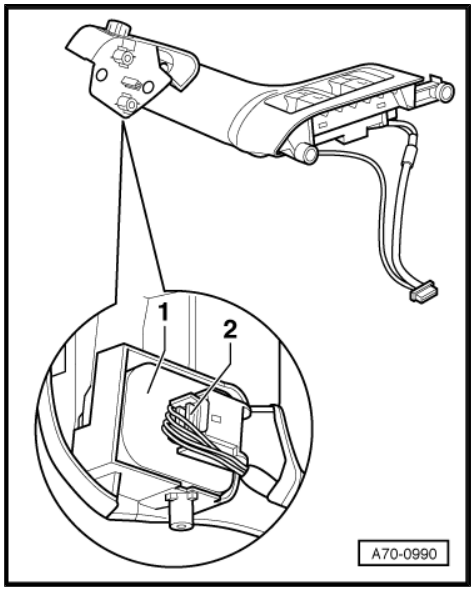

- ♦ Removing
- – Remove the door trim ⇒ page 176 .
- – Remove the insulation ⇒ page 176 and ⇒ page 181 .
- – Remove the armrest ⇒ page 182 .
- – Dismantle the armrest ⇒ page 183 .
- – Use a screwdriver to prise out the mirror adjustment switch -1-.
- – Unplug the connector -2-.
- ♦ Installing
- – Install the mirror adjustment switch -1- in the reverse order of removal.

1.11 Removing and installing interior door handle with central locking system switch

Special tools and workshop equipment required

- ♦ Torque wrench -V.A.G 1783/-

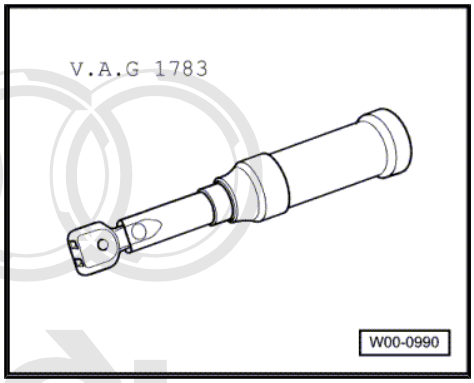

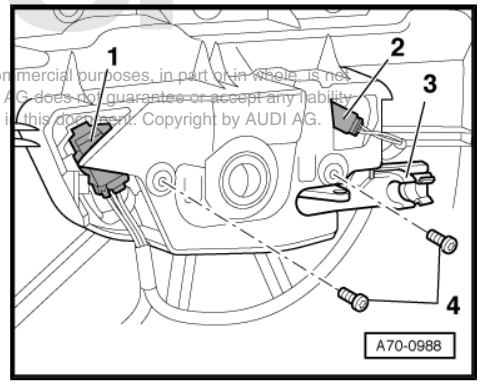

- ♦ Removing
- – Remove the door trim ⇒ page 176 .
- – Unplug the connector -1-.
- – Unplug the connector -2-.
- – Unscrew the bolts -4- (2x).
- ♦ Tightening torque 2 Nm.
- – Take out the interior door handle on the front side of the door trim.
- ♦ Installing
- – Make sure the cable of the connector -2- is positioned behind the holder -3-.
- – Install the interior door handle in the reverse order of removal.

Protected by copyright. Copying for private or commercial purposes, in part or in whole, is not permitted unless authorised by AUDI AG. AUDI AG does not guarantee or accept any liability with respect to the correctness of information in this document. Copyright by AUDI AG.

1.12 Removing and installing door warning light and footwell light

– Remove the door trim ⇒ page 176 .

– Use a screwdriver to prise out the door warning light -1- from underneath and pull out the door warning light -1- with the cable.

– Unplug the connector at the door warning light -1-.

– Use a screwdriver to prise out the exit light -2- at the front and pull out the exit light -2- with the cable.

– Unplug the connector at the exit light -2-.

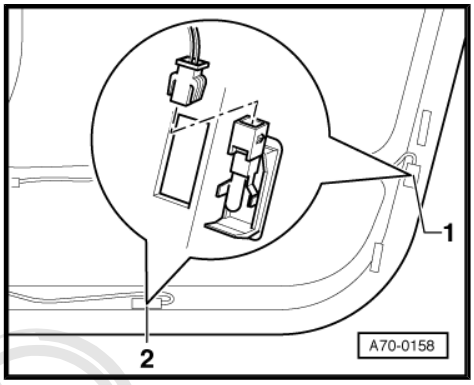

1.13 Removing and installing interior monitor switch module

♦ Door trim removed:

– Press out the interior monitor switch module -1- from the inside.

– Unplug the connectors -2- and -3-.

♦ Door trim fitted:

– Use a screwdriver to carefully prise out the interior monitor switch module -1- from above.

– Unplug the connectors -2- and -3-.

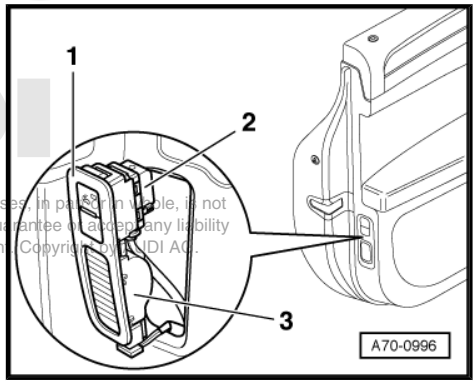

Protected by copyright. Copying for private or commercial purposes, in part or in whole, is not permitted unless authorised by AUDI AG. AUDI AG does not guarantee or accept any liability with respect to the correctness of information in this document. Copyright by AUDI AG.

1.14 Removing and installing hinged pocket with mount

Special tools and workshop equipment required

♦ Torque wrench -V.A.G 1783/-

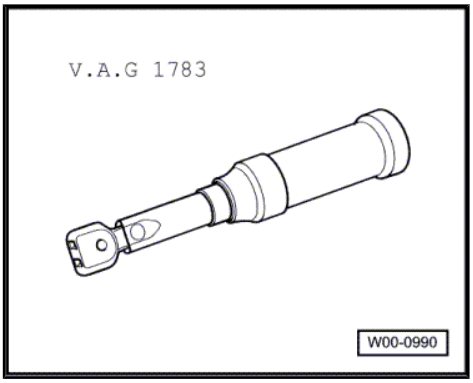

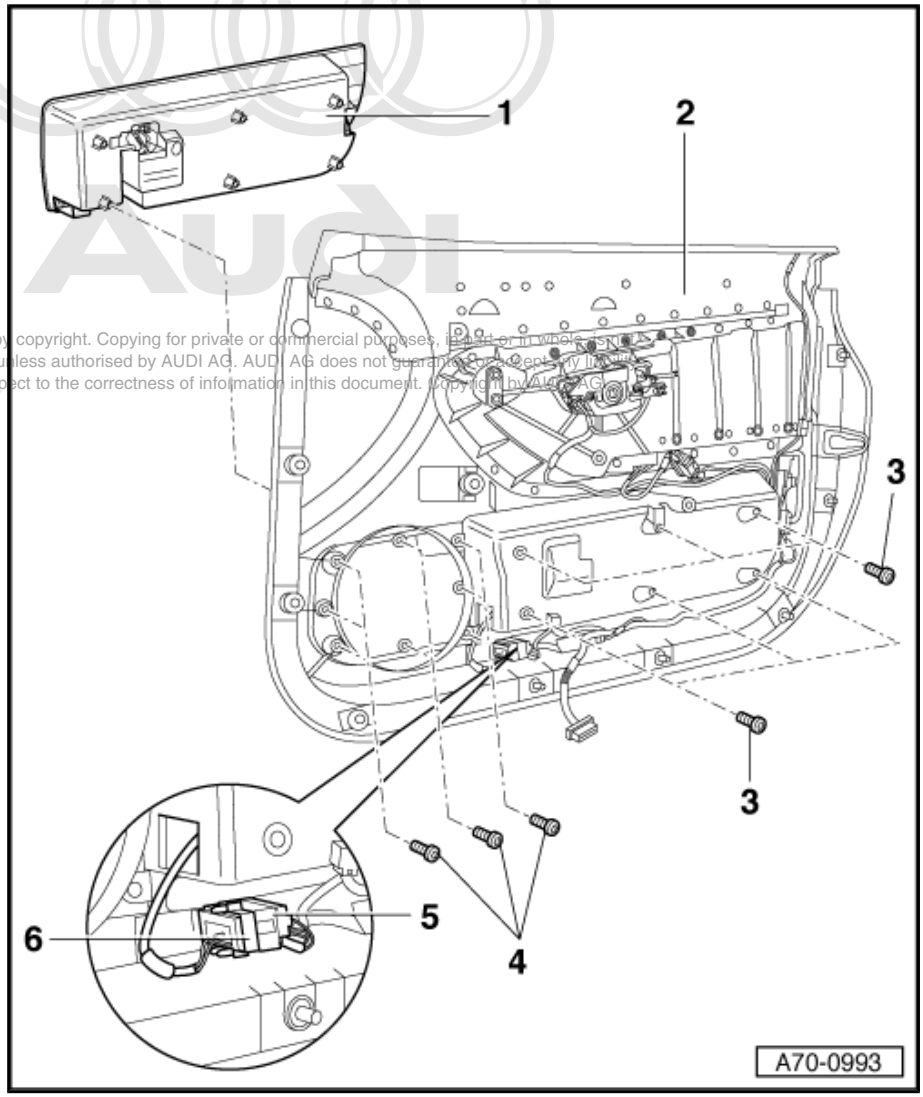

Protected by copyright. Copying for private or commercial purposes, partly or in whole is not permitted unless authorised by AUDI AG. AUDI AG does not guarantee or accept any liability with respect to the correctness of information in this document. Copyright by AUDI AG.

1 - Hinged pocket with mount

♦ Removing

- Remove the door trim ⇒ page 176 and ⇒ page 176 .
- Remove the insulation ⇒ page 176 and ⇒ page 181 .
- Unscrew the bolts -4- (8x).
- Unscrew the bolts -3- (6x).
- Unclip the connector guide -6- from the door trim -2-.
- Unplug the connector -5-.
- Detach the connector guide -6- from the connector -5-.
- Take out the hinged pocket with mount -1- on the front side of the door trim -2-.

♦ Installing

- Install the hinged pocket with mount -1- in the reverse order of removal.

2 - Door trim

3 - Bolts (6x)

❑ Tightening torque 2 Nm.

4 - Bolts (8x)

❑ Tightening torque 2 Nm.

5 - Filler neck compartment lid/ rear lid release switch module connector

6 - Connector guide

1.15 Removing and installing hinged pocket

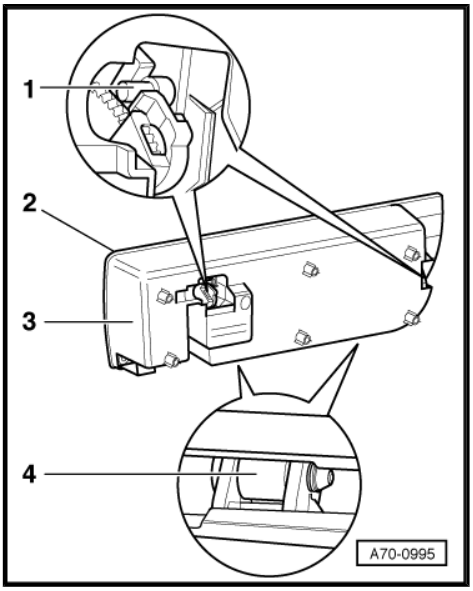

♦ Removing

– Remove the door trim ⇒ page 176 .

– Remove the insulation ⇒ page 176 and ⇒ page 181 .

– Remove the hinged pocket with mount ⇒ page 185 .

– Use pliers to pull out the pins -1- (2x).

– Use a screwdriver to prise out the pins -4- (2x).

– Detach the hinged pocket -2- from the mount -3-.

♦ Installing

– Install the hinged pocket -2- in the reverse order of removal.

1.16 Removing and installing filler neck compartment lid/rear lid release switch

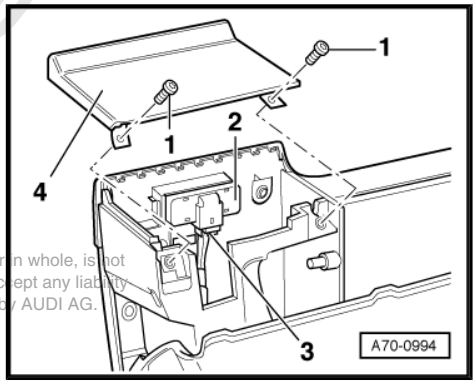

♦ Removing

– Remove the door trim ⇒ page 176 .

– Remove the insulation ⇒ page 176 and ⇒ page 181 .

– Remove the hinged pocket with mount ⇒ page 185 .

– Unscrew the bolts -1- (2x).

– Detach the cover -4-.

– Prise out the switch -2- on the right side and detach the switch -2-.

– Unplug the connector -3-.

♦ Installing

– Install the filler neck compartment lid/rear lid release switch in the reverse order of removal.

Protected by copyright. Copying for private or commercial purposes, in part or in whole, is not permitted unless authorised by AUDI AG. AUDI AG does not guarantee or accept any liability with respect to the correctness of information in this document. Copyright by AUDI AG.

2 Rear door trim panels

2.1 Exploded view of fitting locations

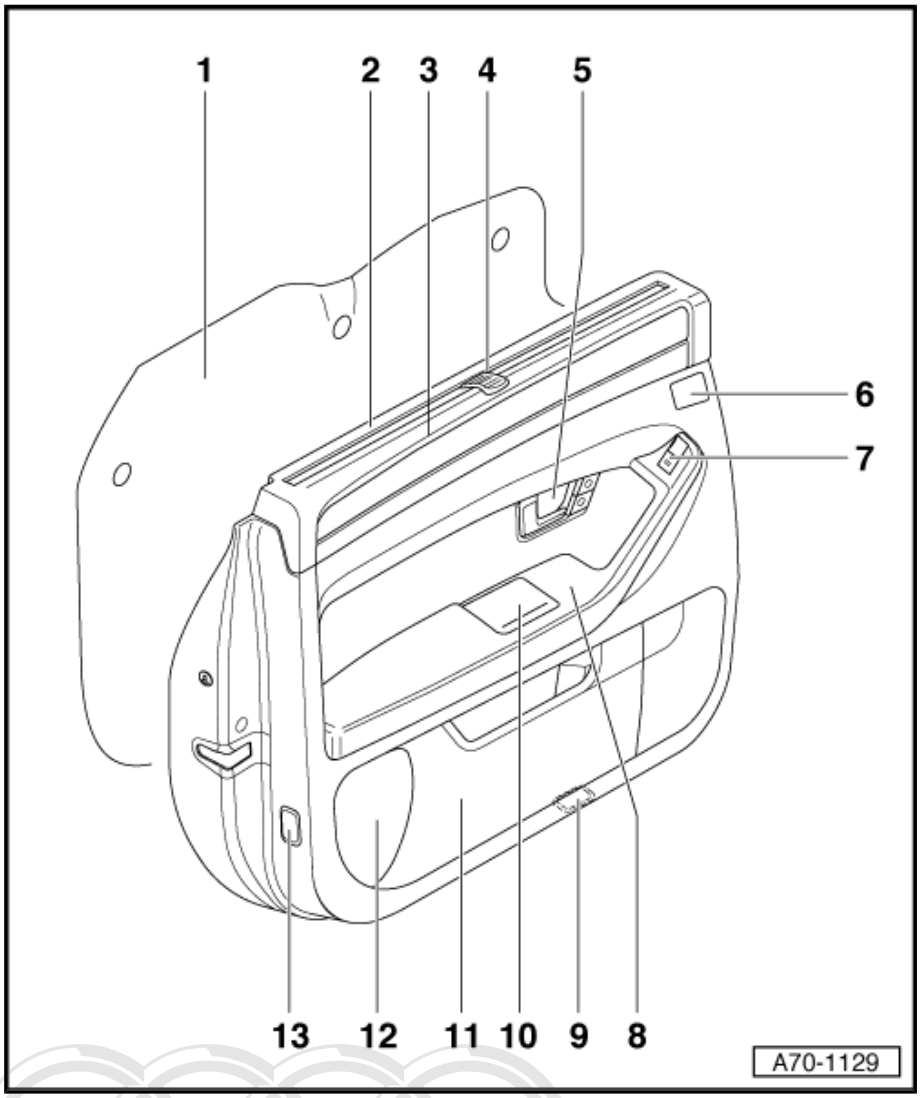

1 - Removing and installing insulation ⇒ page 192

2 - Removing and installing door trim ⇒ page 189

3 - Removing and installing trim panel ⇒ page 192

4 - Sun blind

- ❑ Removing and installing mechanical sun blind ⇒ page 198
- ❑ Removing and installing housing for electric sun blind ⇒ page 200
- ❑ Removing and installing electric sun blind drive unit ⇒ page 203
- ❑ Moving electric sun blind with defective drive unit ⇒ page 203
- ❑ Removing and installing electric sun blind control unit ⇒ page 209

5 - Removing and installing interior door handle with central locking system switch ⇒ page 195

6 - Removing and installing treble loudspeaker trim ⇒ page 195

7 - Removing and installing window regulator switch ⇒ page 193

8 - Removing and installing armrest ⇒ page 193

9 - Removing and installing exit light ⇒ page 194

10 - Ashtray

11 - Removing and installing hinged pocket with mount ⇒ page 196

12 - Removing and installing triangular trim ⇒ page 195

13 - Removing and installing door warning light ⇒ page 194

Protected by copyright. Copying for private or commercial purposes, in part or in whole, is not permitted unless authorised by AUDI AG. AUDI AG does not guarantee or accept any liability with respect to the correctness of information in this document. Copyright by AUDI AG.

2.2 Exploded view of door trim cable routing

1 - Cable to treble loudspeaker

2 - Cable to central locking switch (driver side only)

3 - Cable to interior door handle light

4 - Cable to window regulator switch

5 - Cable to ashtray light

6 - Connector for window regulator switch module and ashtray light

7 - Cable to door warning light

8 - Cable to connector at window regulator control unit

9 - Cable to exit light

10 - Cable to connector at bass loudspeaker

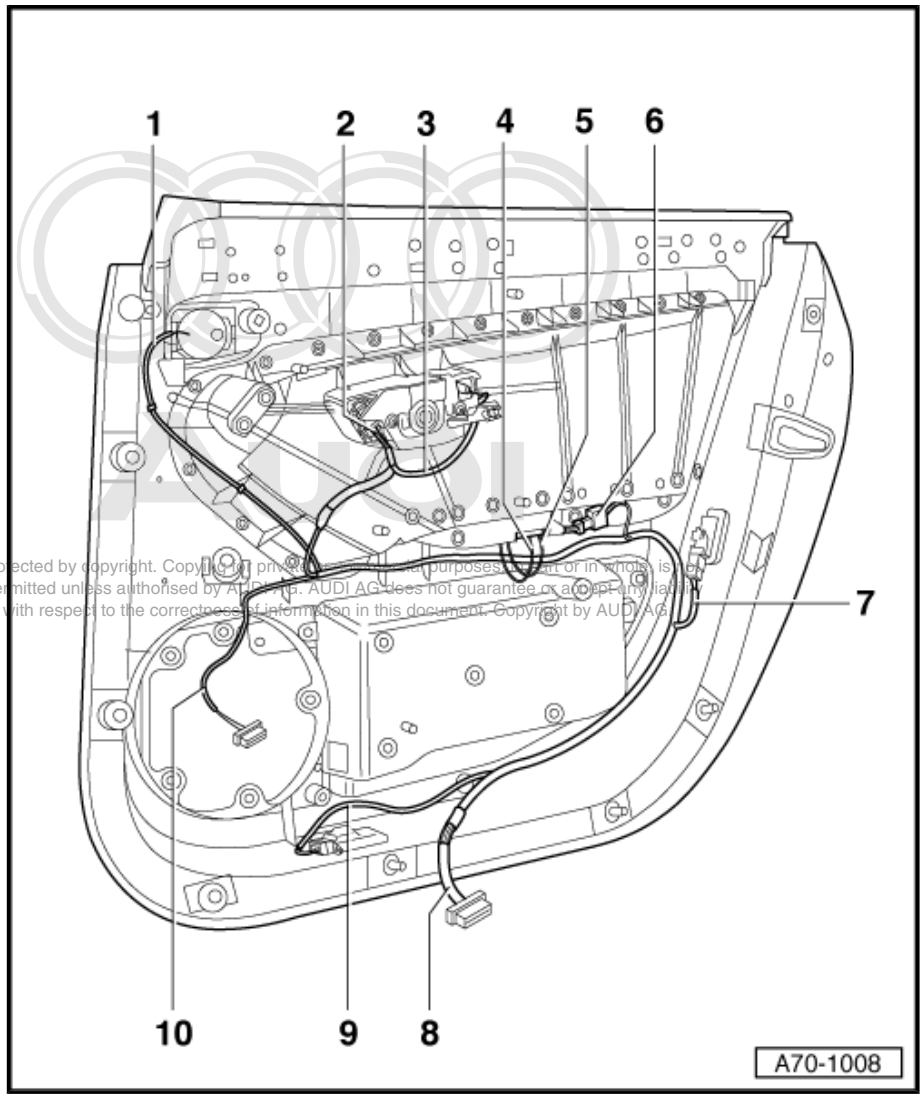

Protected by copyright. Copying for private or commercial purposes, in part or in whole, is not permitted unless authorised by AUDI AG. AUDI AG does not guarantee or accept any liability with respect to the correctness of information in this document. Copyright by AUDI AG.

2.3 Removing and installing rear door trim

Special tools and workshop equipment required

- Torque wrench -V.A.G 1410-

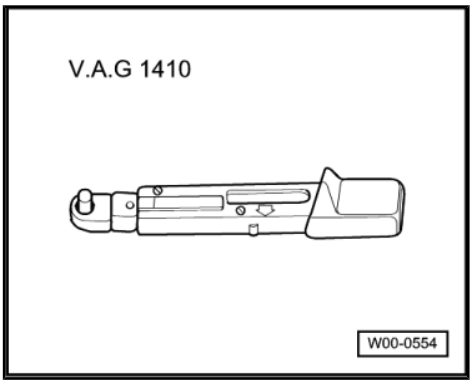

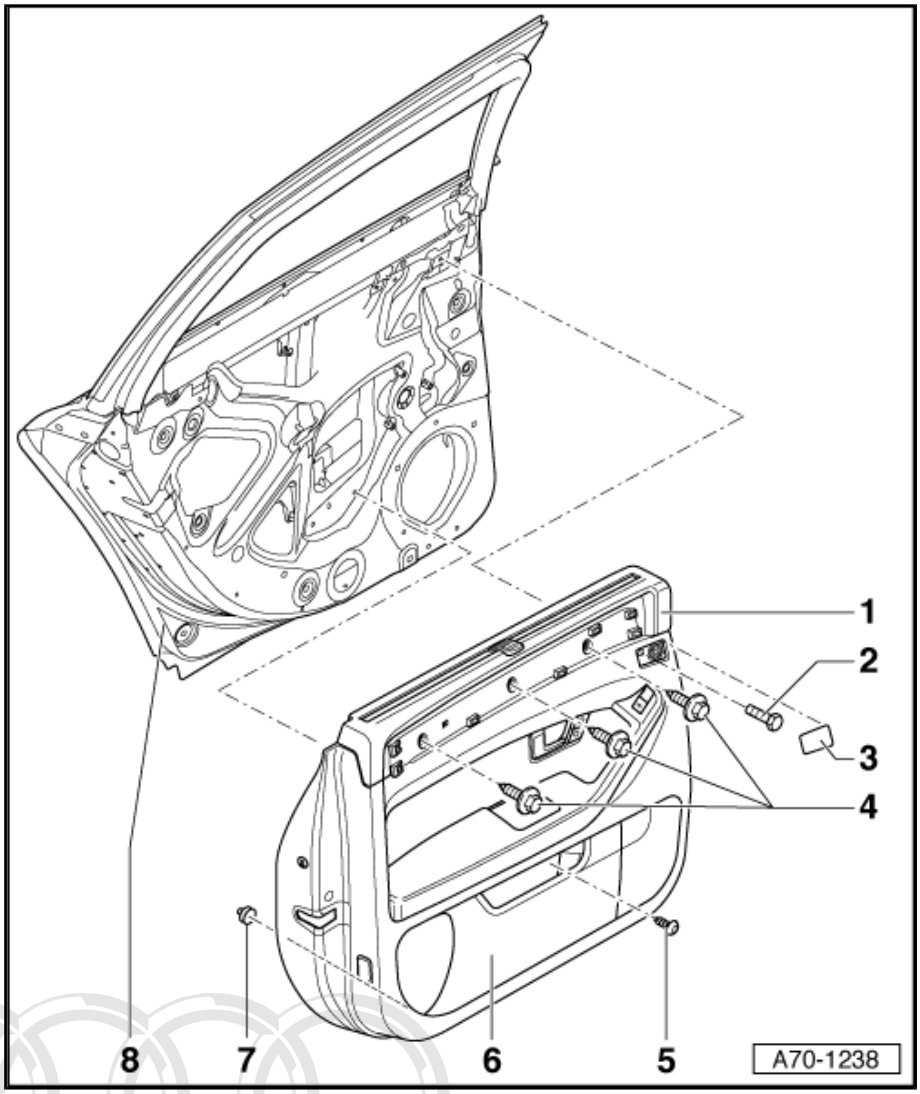

1 - Door trim

♦ Removing

- Use a screwdriver to prise out the treble loudspeaker trim -3-.
- Unscrew the bolt -2-.
- Unscrew the bolt -5-.

Do not open the hinged pocket -6-.

- Sun blind fitted: Remove the trim panel ⇒ page 192 .
- Unscrew the bolts -4-.
- Starting at the bottom, unfasten the door trim -1- at the clips -7- (8x).
- Disengage the Bowden cable for the interior door handle ⇒ page 191
- Unplug the connector at the window regulator control unit ⇒ page 191 .
- Unplug the connector at the bass loudspeaker ⇒ page 191

♦ Installing

- Make sure all the clips -7- are in position on the back of the door trim. Replace damaged clips ⇒ page 191
- Install the door trim -1- in the reverse order of removal.

2 - Bolt

❑ Vehicles with long wheelbase are fitted with a nut.

❑ Tightening torque 3 Nm.

3 - Treble loudspeaker trim

4 - Bolts

❑ Vehicles with long wheelbase are fitted with 4 bolts.

❑ Tightening torque 3 Nm.

5 - Bolt

❑ Vehicles with long wheelbase are fitted with a nut.

❑ Tightening torque 3 Nm.

Reproduction or publication of this document for commercial purposes, in part or in whole, is not permitted unless authorised by AUDI AG. AUDI AG does not guarantee or accept any liability with respect to the correctness of information in this document. Copyright by AUDI AG.

6 - Hinged pocket with mount

7 - Clips (8x)

8 - Door shell

Disengaging Bowden cable

– Pull the Bowden cable -2- out of the guide -1-.

– Disengage the hook -3-.

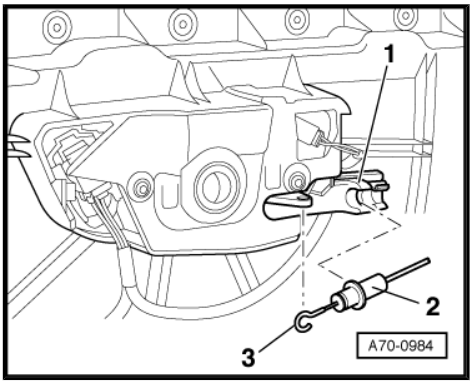

Unplugging connector at window regulator control unit

– Press in the retainer tab on the back of the connector -2- and unplug the connector -2- from the control unit -1-.

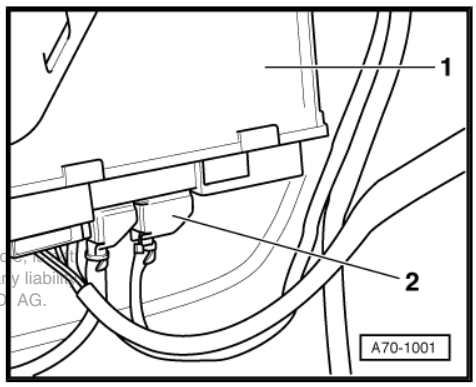

Protected by copyright. Copying for private or commercial purposes, in part or in whole, is not permitted unless authorised by AUDI AG. AUDI AG does not guarantee or accept any liability with respect to the correctness of information in this document. Copyright by AUDI AG.

Unplugging connector at bass loudspeaker

– Squeeze the holders -1- (2x) and unplug the connector -2-.

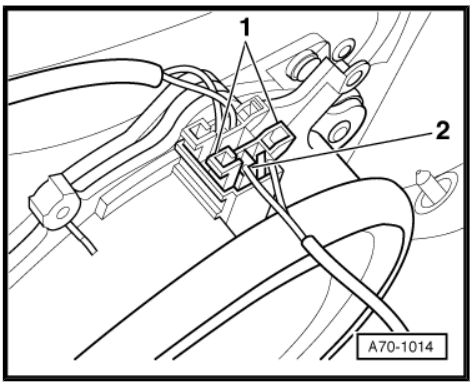

Door trim securing clip

– Press the retainer tab -2- and pull out the clip -1- in arrow direction.

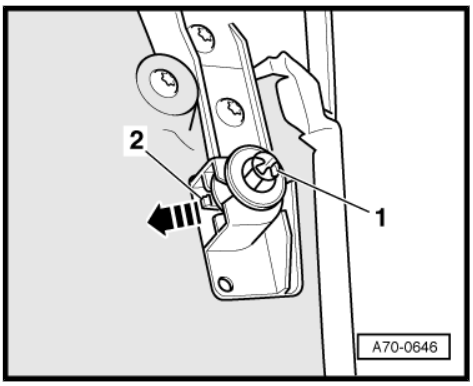

2.4 Removing and installing trim panel

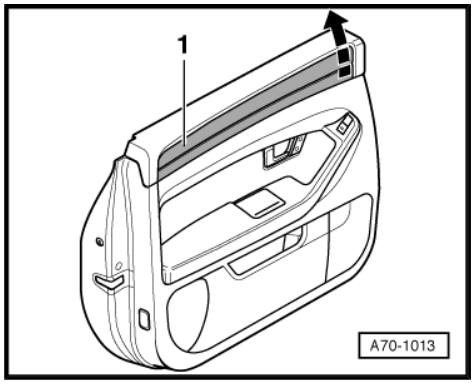

- ♦ Removing
- – Carefully prise out the trim panel -1- in arrow direction.
- – Pull off the trim panel -1- to the front.
- ♦ Installing
- – Install the trim panel -1- in the reverse order of removal.

2.5 Removing and installing insulation

1 - Insulation

- ♦ Removing
  - – Remove the door trim ⇒ page 189 .
  - – Unscrew the holders -3- (2x).
  - – Use a screwdriver to prise off the circlips -2- (2x).
  - – Detach the insulation -1-.
- ♦ Installing
  - – Install the insulation -1- in the reverse order of removal.

2 - Circlips (2x)

3 - Holder (2x)

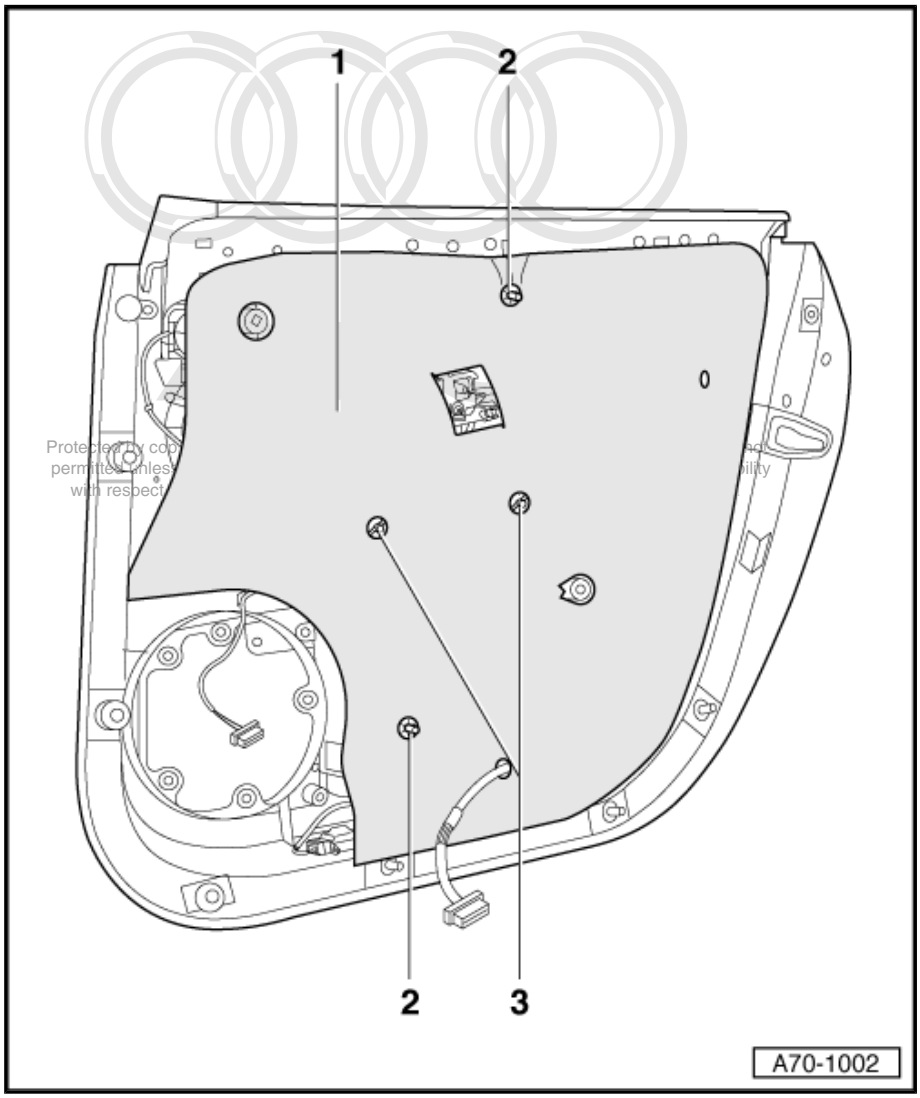

2.6 Removing and installing armrest

1 - Armrest

- Removing
  - Remove the door trim ⇒ page 189 .
  - Remove the insulation ⇒ page 192 .
  - Unscrew the bolts -2- (9x).
  - Unscrew the bolts -3- (2x).
  - Unplug the connector for the window regulator switch module -4-.
  - Detach the armrest -1-.
- Installing
  - Install the armrest -1- in the reverse order of removal.

2 - Bolts (9x)

3 - Bolts (2x)

4 - Connector for window regulator switch module

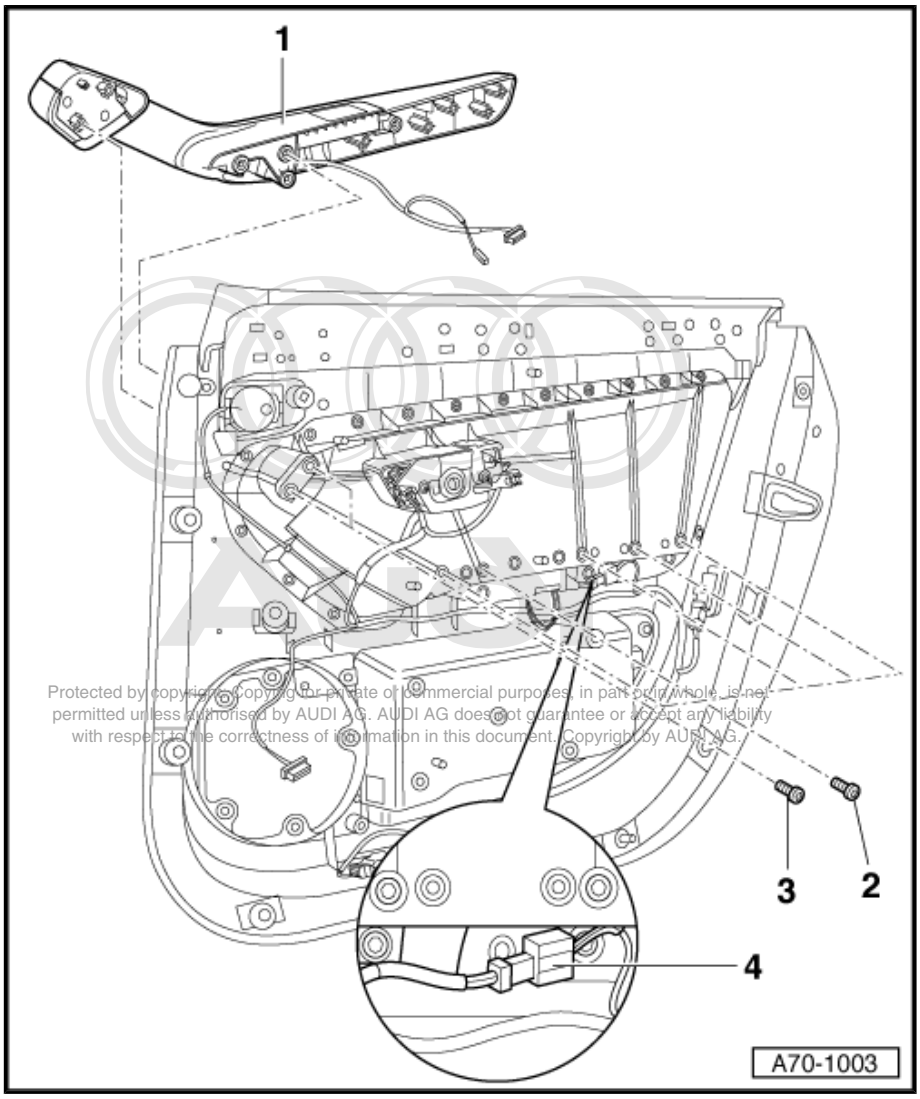

Protected by copyright. Copying for private or commercial purposes, in part or in whole, is not permitted unless authorised by AUDI AG. AUDI AG does not guarantee or accept any liability with respect to the correctness of information in this document. Copyright by AUDI AG.

2.7 Removing and installing window regulator switch module

Special tools and workshop equipment required

- Torque wrench -V.A.G 1410-

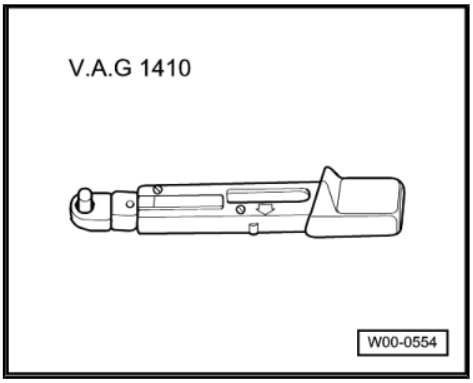

♦ Removing

– Remove the door trim ⇒ page 189 .

– Remove the insulation ⇒ page 192 .

– Remove the armrest ⇒ page 193 .

– Unscrew the bolts -5- (2x).

♦ Tightening torque 2 Nm.

– Unscrew the bolt -4-.

♦ Tightening torque 2 Nm.

– Pull the front section -3- of the armrest -1- out of the guide -2-.

– Push down the cover -6- to the rear.

– Unplug the connector on the inside of the front section -arrow-.

♦ Installing

– Install the window regulator switch module in the reverse order of removal.

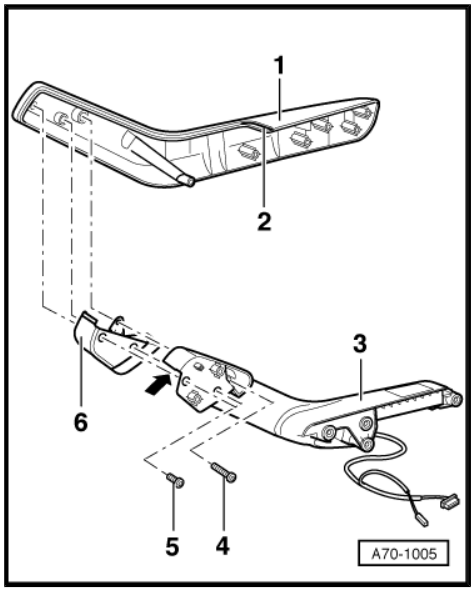

Protected by copyright. Copying for private or commercial purposes, in part or in whole, is not permitted unless authorised by AUDI AG. AUDI AG does not guarantee or accept any liability with respect to the correctness of information in this document. Copyright by AUDI AG.

2.8 Removing and installing door warning light and footwell light

– Remove the door trim ⇒ page 189 .

– Use a screwdriver to prise out the door warning light -1- from underneath and pull out the door warning light -1- with the cable.

– Unplug the connector at the door warning light -1-.

– Use a screwdriver to prise out the exit light -2- at the front and pull out the exit light -2- with the cable.

– Unplug the connector at the exit light -2-.

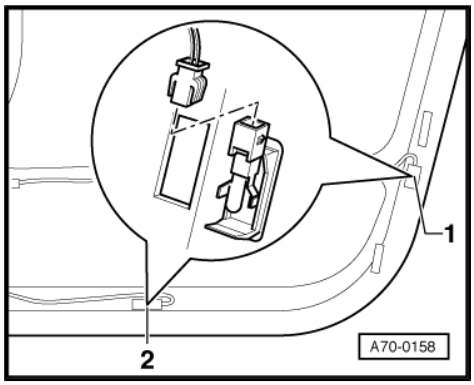

2.9 Removing and installing treble loudspeaker trim

– Use a screwdriver to carefully prise out the treble loudspeaker trim -1- in arrow direction.

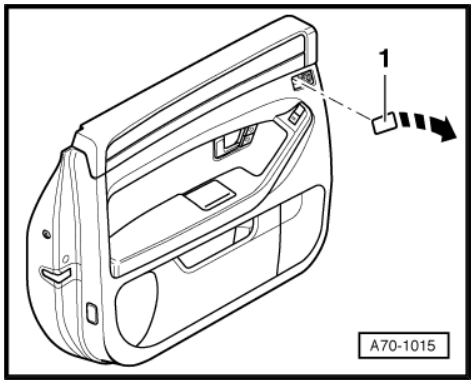

2.10 Removing and installing treble loudspeaker

– Remove the door trim ⇒ page 189 .
– Fold aside the insulation -3- in arrow direction.
– Unplug the connector -1-.
– Unclip the treble loudspeaker -2-.

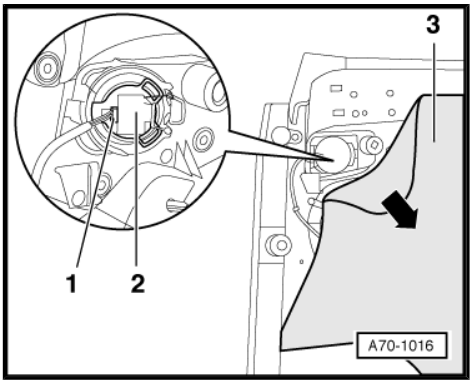

2.11 Removing and installing triangular trim

♦ Removing
– Remove the door trim ⇒ page 189 .
– Unscrew the bolts -1- (3x).
– Detach the triangular trim on the front side of the door trim.

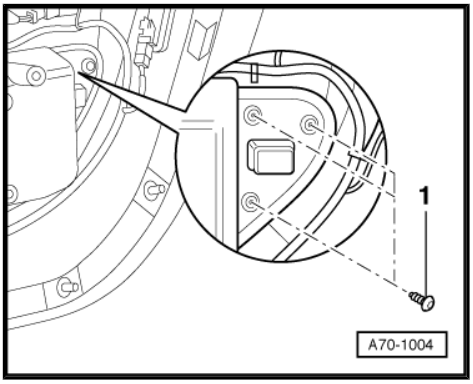

2.12 Removing and installing interior door handle with central locking system switch

Special tools and workshop equipment required

♦ Torque wrench -V.A.G 1783-

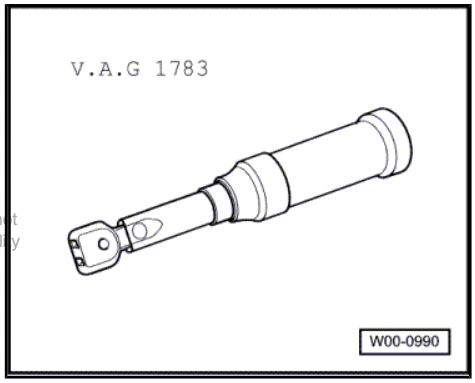

Protected by copyright. Copying for private or commercial purposes, in part or in whole, is not permitted unless authorised by AUDI AG. AUDI AG does not guarantee or accept any liability with respect to the correctness of information in this document. Copyright by AUDI AG.

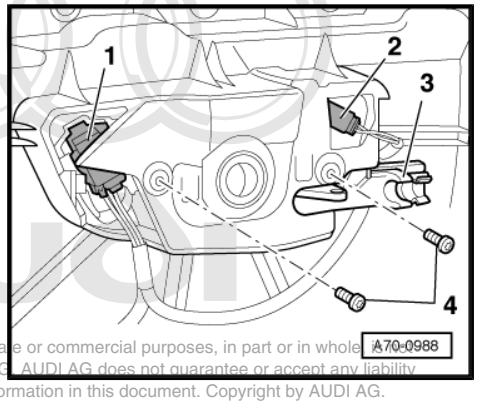

Protected by copyright. Copying for private or commercial purposes, in part or in whole, is not permitted unless authorised by AUDI AG. AUDI AG does not guarantee or accept any liability with respect to the correctness of information in this document. Copyright by AUDI AG.

♦ Removing

– Remove the door trim ⇒ page 189 .

– Remove the insulation ⇒ page 192 .

– Unplug the connector -1-.

– Unplug the connector -2-.

– Unscrew the bolts -4- (2x).

♦ Tightening torque 2 Nm.

– Take out the interior door handle on the front side of the door trim.

♦ Installing

– Make sure the cable of the connector -2- is positioned behind the holder -3-.

– Install the interior door handle in the reverse order of removal.

2.13 Removing and installing hinged pocket with mount

Special tools and workshop equipment required

♦ Torque wrench -V.A.G 1783-

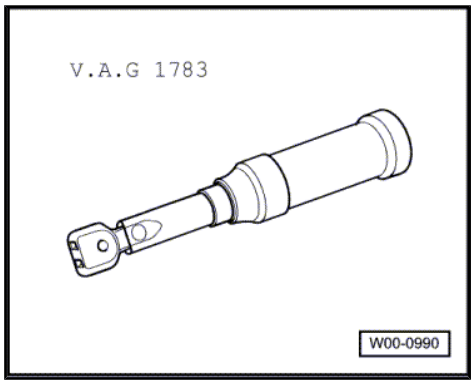

1 - Hinged pocket with mount

♦ Removing

– Remove the door trim ⇒ page 189 .
– Remove the insulation ⇒ page 192 .
– Unscrew the bolts -3- (5x).
– Unscrew the bolts -4- (7x).
– Take out the hinged pocket with mount -1- on the front side of the door trim -2-.

♦ Installing

– Install the hinged pocket with mount -1- in the reverse order of removal.

2 - Door trim

3 - Bolts (5x)

❑ Tightening torque 2 Nm.

4 - Bolts (7x)

❑ Tightening torque 2 Nm.

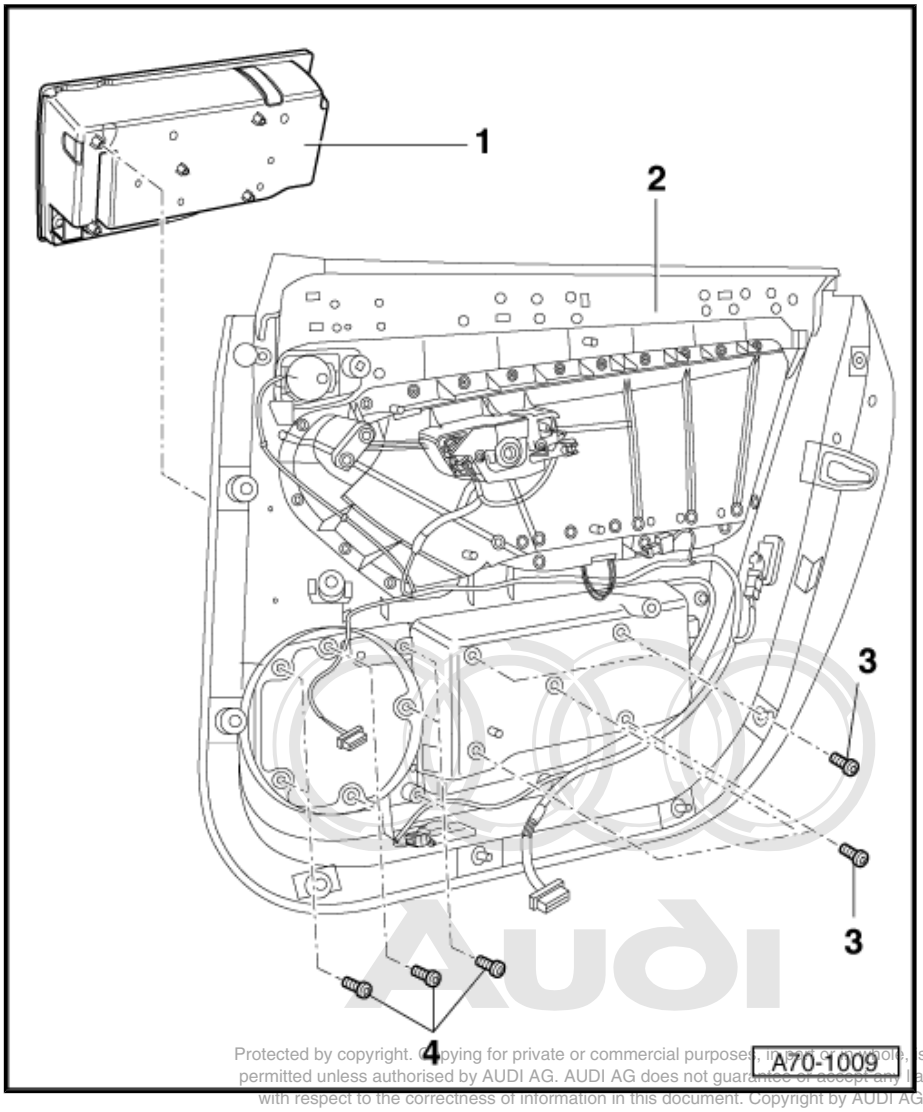

Protected by copyright. Copying for private or commercial purposes, in part or in whole, is not permitted unless authorised by AUDI AG. AUDI AG does not guarantee or accept any liability with respect to the correctness of information in this document. Copyright by AUDI AG.

2.14 Removing and installing hinged pocket without mount

♦ Removing

– Remove the door trim ⇒ page 189 .
– Remove the insulation ⇒ page 192 .
– Remove the hinged pocket with mount ⇒ page 196 .
– Use pliers to pull out the pins -1- (2x).
– Use a screwdriver to prise out the pins -4- (2x).
– Detach the hinged pocket -2- from the mount -3-.

♦ Installing

– Install the hinged pocket -2- in the reverse order of removal.

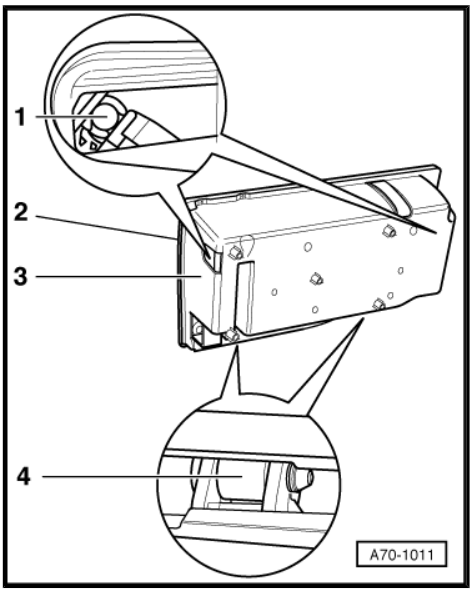

2.15 Removing and installing glasses compartment - vehicles with long wheelbase only

♦ Removing

– Remove the door trim ⇒ page 189 .

– Remove the insulation ⇒ page 192 .

– Vehicles with ambient lighting: Remove the voltage converter for the rear door ambient lighting ⇒ Electrical system; Rep. gr. 97 .

– Screw out the bolt -arrows-.

♦ Tightening torque 2 Nm.

– Take out the glasses compartment to the front of the door trim.

♦ Installing

– Install the glasses compartment in the reverse order of removal.

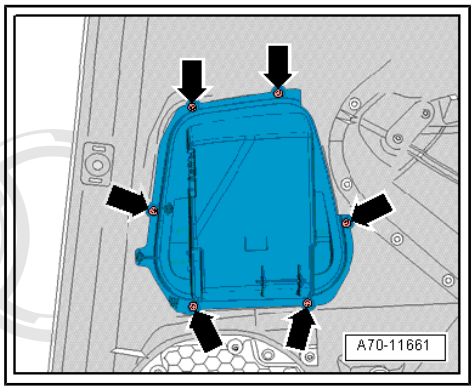

2.16 Removing and installing mechanical sun blind

Special tools and workshop equipment required

♦ Torque wrench -V.A.G 1783-

Protected by copyright. Copying for private or commercial purposes, in part or in whole, is not permitted unless authorised by AUDI AG. AUDI AG does not guarantee or accept any liability with respect to the correctness of information in this document. Copyright by AUDI AG.

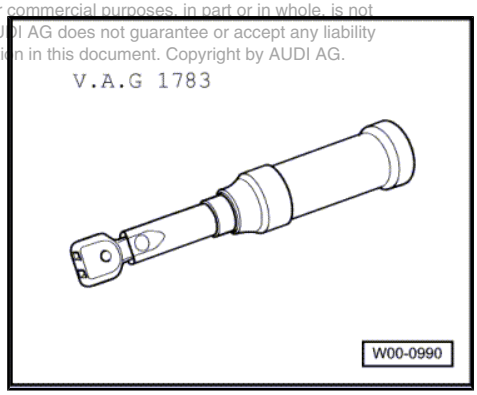

Removing

– Remove the door trim ⇒ page 189 .

– Remove the insulation ⇒ page 192 .

– Screw out the bolts -2- (5x).

– Detach the sun blind -1- from the door -3-.

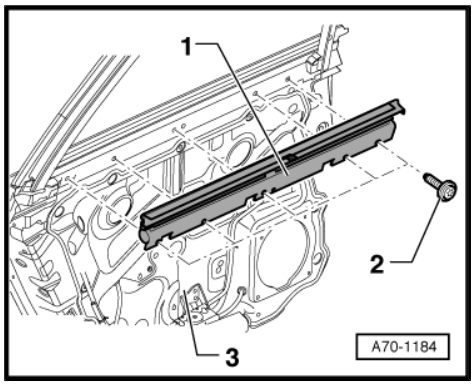

Installing

– Attach the sun blind -1- to the door -3-.
– Tighten the bolts -2- (5x) to the specified torque.
– Make sure all clips are in position on the back of the door trim.
– Replace damaged clips ⇒ page 191
– Engage the Bowden cable for the interior door handle ⇒ page 191
– Plug in the connector at the window regulator control unit ⇒ page 191
– Plug in the connector at the bass loudspeaker ⇒ page 191

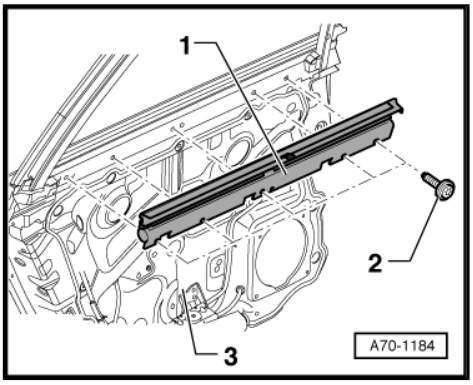

– Move the door trim -2- to the sun blind -1- and position the door trim.

Protected by copyright. Copying for private or commercial purposes, in part or in whole, is not permitted unless authorised by AUDI AG. AUDI AG does not guarantee or accept any liability with respect to the correctness of information in this document. Copyright by AUDI AG.

– Clip the door trim -2- to the sun blind -1- (4 clips).

3 - Clips

– Install the door trim ⇒ page 189 .

Tightening torque:

Sun blind to door: 3 Nm

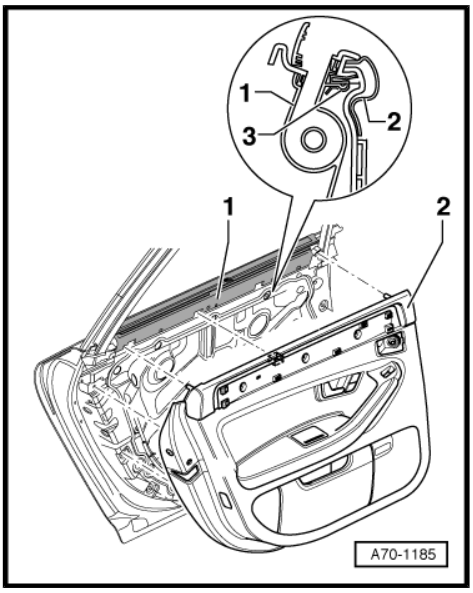

2.17 Removing and installing hook for sun blind

Removing

– Press in the pin -2- (2x) slightly in arrow direction.
– Detach the hook -1- from the door frame -3-.

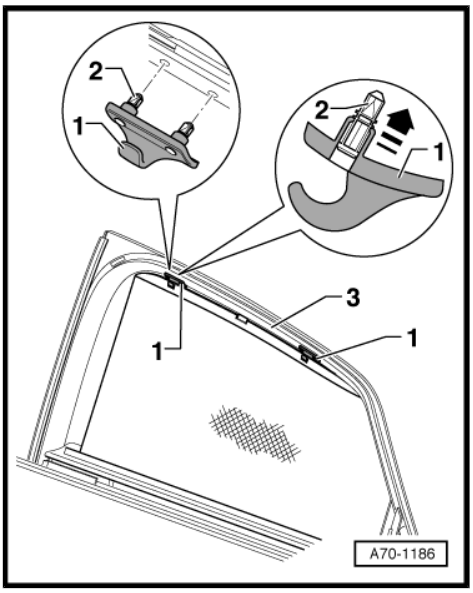

Installing

– Align the pins -2- of the hook -1- with the holes in the door frame -3-.
– Position the hook -1- on the door frame.
– Press in the pins -2- until they engage.

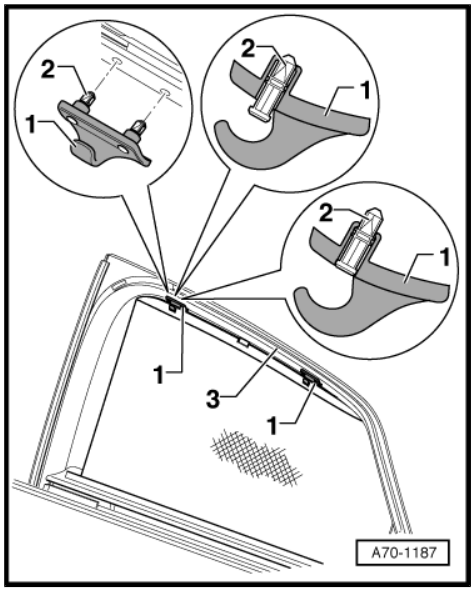

2.18 Removing and installing electric sun blind

2.18.1 Removing and installing housing for electric sun blind

Special tools and workshop equipment required

♦ Torque wrench -V.A.G 1783-

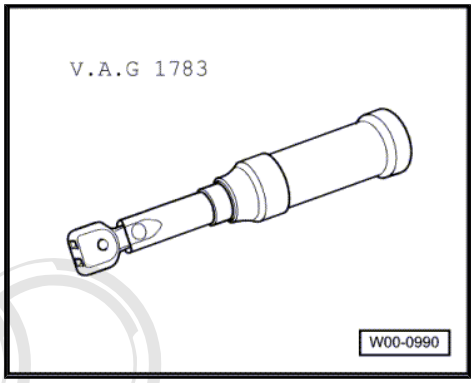

Removing

– Remove the door trim ⇒ page 189 .
– Remove the insulation ⇒ page 192 .
– Sun blind removal involves setting it to service mode. To do so, use the switch in the roof module to unwind the sun blind in the rear door.

Note

Protected by copyright. Copying for private or commercial purposes, in part or in whole, is not permitted unless authorised by AUDI AG. AUDI AG does not guarantee or accept any liability with respect to the correctness of information in this document. Copyright by AUDI AG.

Moving electric sun blind with defective drive unit *⇒ page 203* .

– Retract the sun blind in the rear door again by pressing the switch in the roof module for at least 5 seconds.
– Unplug the connector -4- to the sun blind control unit.
– Plug in the connector -4- to the sun blind control unit. This activates service mode.

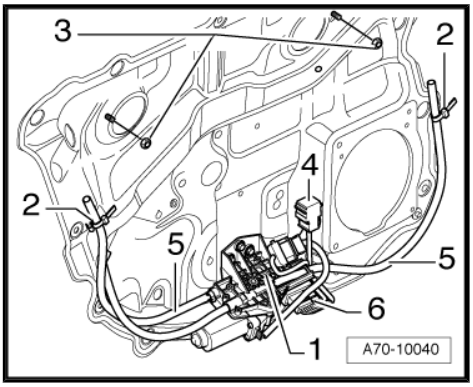

– Actuate the switch in the roof module. The sun blind extends by approx. 150 mm.
– Unscrew the window regulator motor ⇒ Rep. gr. 58 .
– Push down the door window.
– Use a small flat screwdriver to unfasten the clips -2- on the upper side between the roller -4- and the clip -2-.
– Pull the shafts -5- out of the mounts -3-. In doing so, hold the roller blind to stop it retracting.

Protected by copyright. Copying for private or commercial purposes, in part or in whole, is not permitted unless authorised by AUDI AG. AUDI AG does not guarantee or accept any liability with respect to the correctness of information in this document. Copyright by AUDI AG.

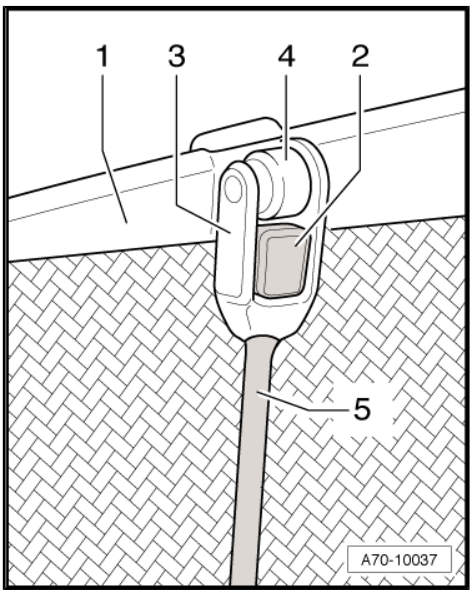

– A second mechanic is required for implementation of the next two steps.
– Hold the cover -1- open and allow the sun blind -2- to almost fully retract.

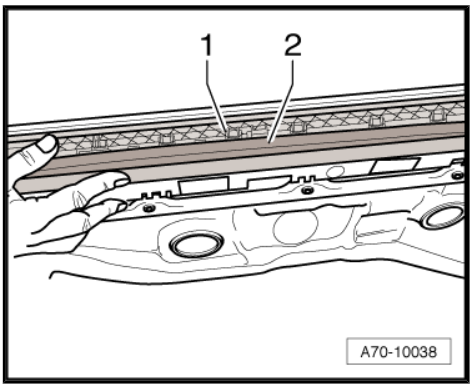

– Retract the shafts by pressing the switch in the roof module for at least 5 seconds.
– Unplug the connector -4- to the sun blind control unit.

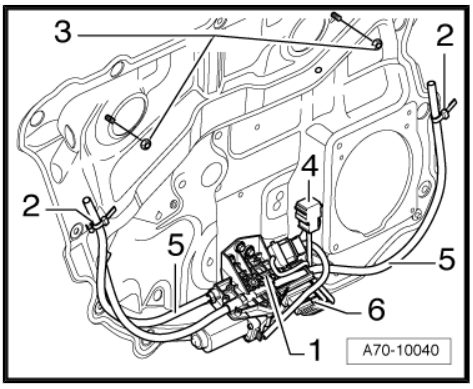

– Unscrew the bolts -2- (5x).
– Carefully lift out the sun blind housing -1-.

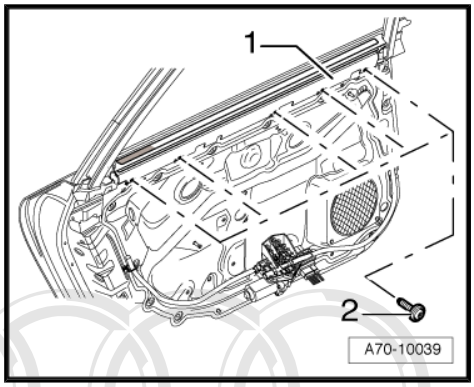

Installing

– Hold the cover -1- open.

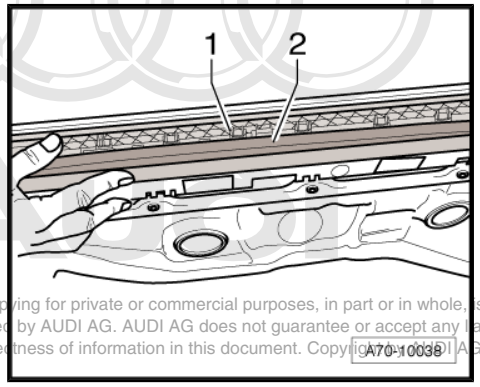

Protected by copyright. Copying for private or commercial purposes, in part or in whole, is not permitted unless authorised by AUDI AG. AUDI AG does not guarantee or accept any liability with respect to the correctness of information in this document. Copyright by AUDI AG.

– Pull the sun blind -2- slightly out of the housing.
– Slide the sun blind housing -1- onto the door frame, inserting the shafts in the sun blind housing -1- such that the ends of the shafts are visible.

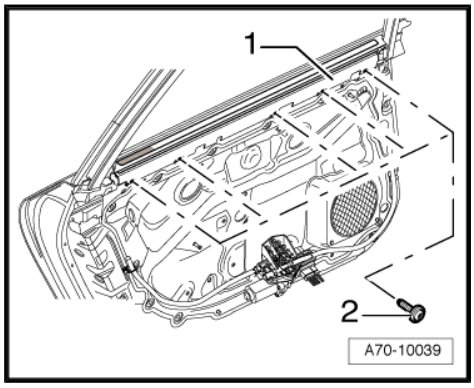

Note

The sun blind must not retract into the housing.

– Use the bolts -2- (5x) to screw on the sun blind housing. 3 Nm.

– Plug in the connector -4- to the sun blind control unit.
– Plug in the connector to the window regulator motor.

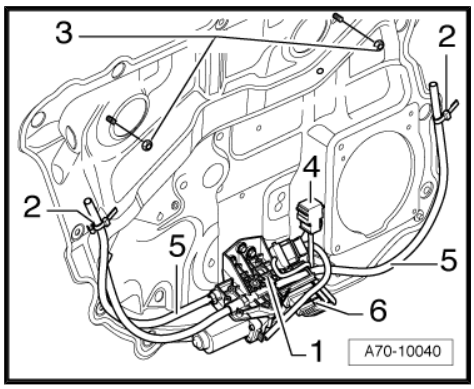

– A second mechanic is required for implementation of the next two steps.
– Open the cover of the sun blind housing again and pull out the blind slightly.
– Use the switch in the roof module to extend the shafts (approx. 150 mm).
– Pull out the sun blind until it can be engaged at the shafts.
– Fasten the clips -2- (2x).
– Use the switch in the roof module to retract the sun blind.
– Install the window regulator motor ⇒ Rep. gr. 58 .
– Close the window.

The electric sun blind must be re-adapted; proceed as follows.

– Fully extend the sun blind by way of the switch in the roof module and keep actuating the switch for at least a further 6 seconds. This starts an automatic initialisation process.
– Install the door trim ⇒ page 189

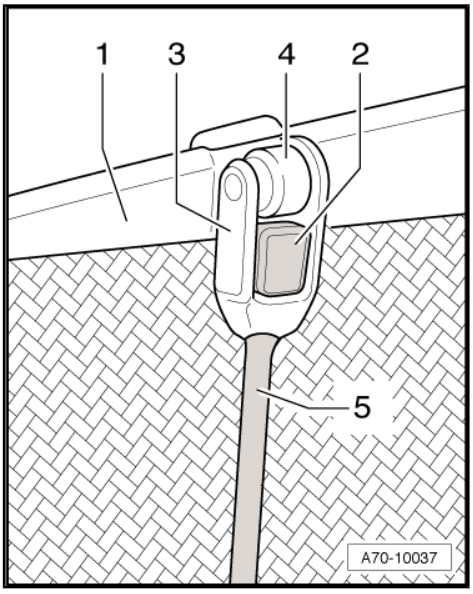

2.18.2 Moving electric sun blind with defective drive unit

Sequence of operations

– Remove the door trim ⇒ page 189 .
– Remove the insulation ⇒ page 192 .
– Sever the cable ties -2- at the conduits -5- and at the wiring harness.
– Detach the conduits from the sun blind drive unit -1-.
• The flexible shafts of the sun blind drive unit are then visible.
– Clamp the end of one of the flexible shafts in the drill chuck of a power screwdriver.
• Turning anti-clockwise extends the sun blind.
• Turning clockwise retracts the sun blind.
– Once the sun blind has moved slightly, apply the power screwdriver to the second shaft so that the sun blind moves evenly.

Protected by copyright. Copying for private or commercial purposes, in part or in whole, is not permitted unless authorised by AUDI AG. AUDI AG does not guarantee or accept any liability with respect to the correctness of information in this document. Copyright by AUDI AG.

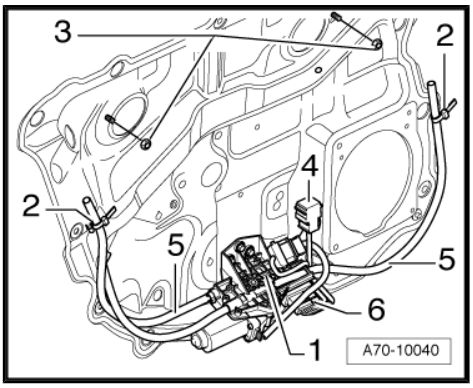

2.18.3 Removing and installing electric sun blind drive unit

Special tools and workshop equipment required

♦ Torque wrench -V.A.G 1783-

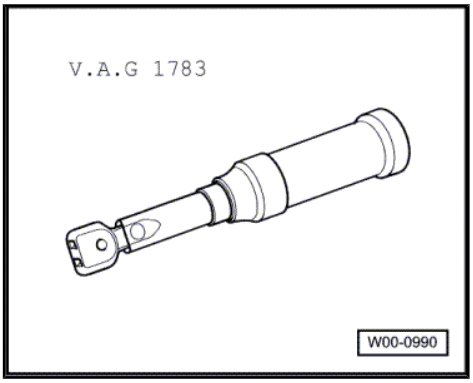

♦ Guide sleeve -T40077-

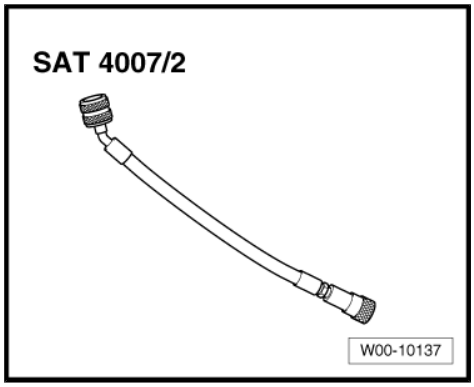

Removing

– Remove the door trim ⇒ page 189 .

– Remove the insulation ⇒ page 192 .

– Remove the electric sun blind housing ⇒ page 200 .

Note

Moving electric sun blind with defective drive unit *⇒ page 203* *.*

– Sever the cable ties -2- at the conduits -5- and at the wiring harness.

– Unplug the connector -4- to the electric sun blind drive unit -1-.

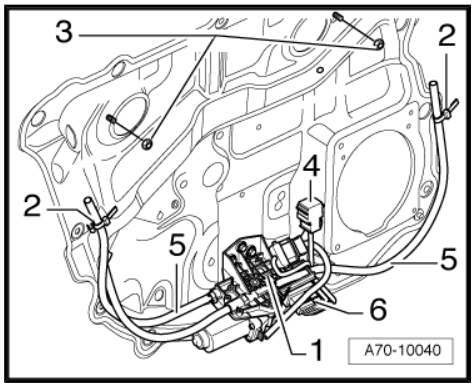

– Insert the guide sleeves -T40077- -1-.

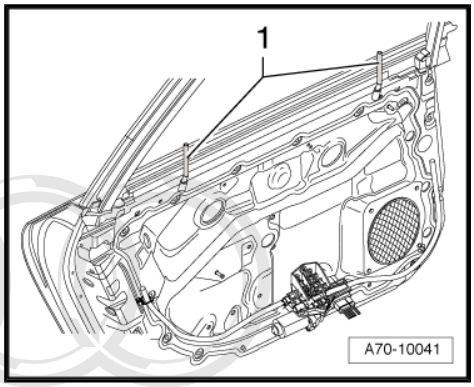

Protected by copyright. Copying for private or commercial purposes, in part or in whole, is not permitted unless authorised by AUDI AG. AUDI AG does not guarantee or accept any liability with respect to the correctness of information in this document. Copyright by AUDI AG.

– Remove the rear assembly mount ⇒ Rep. gr. 58 .
– Unscrew the nuts -3-.

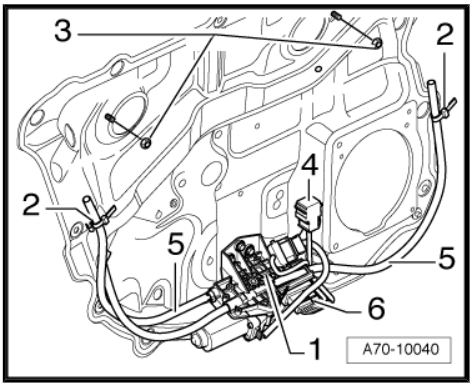

– Turn the assembly mount onto the back.
– Unfasten the hose clamps -4- (2x).
– Lift off the protective sleeves -2- (2x).
– Lift off the end caps -3- (2x).
– Detach the clamps -5- (2x) over the guide tubes -8-.
– Pull the rubber grommets -7- (2x) out of the penetrations -6-.
– Detach the rubber grommets -7- (2x) over the guide tubes -8-.

1 - Shaft
2 - Protective sleeves
3 - End caps
4 - Hose clamps
5 - Clamps
- ❑ The clamps face inwards on vehicles with long wheelbase (as shown in Fig.).
- ❑ The clamps face outwards on vehicles with short wheelbase.

6 - Penetrations in assembly mount
7 - Rubber grommet
8 - Guide tubes
9 - Assembly mount
10 - Retainer tabs

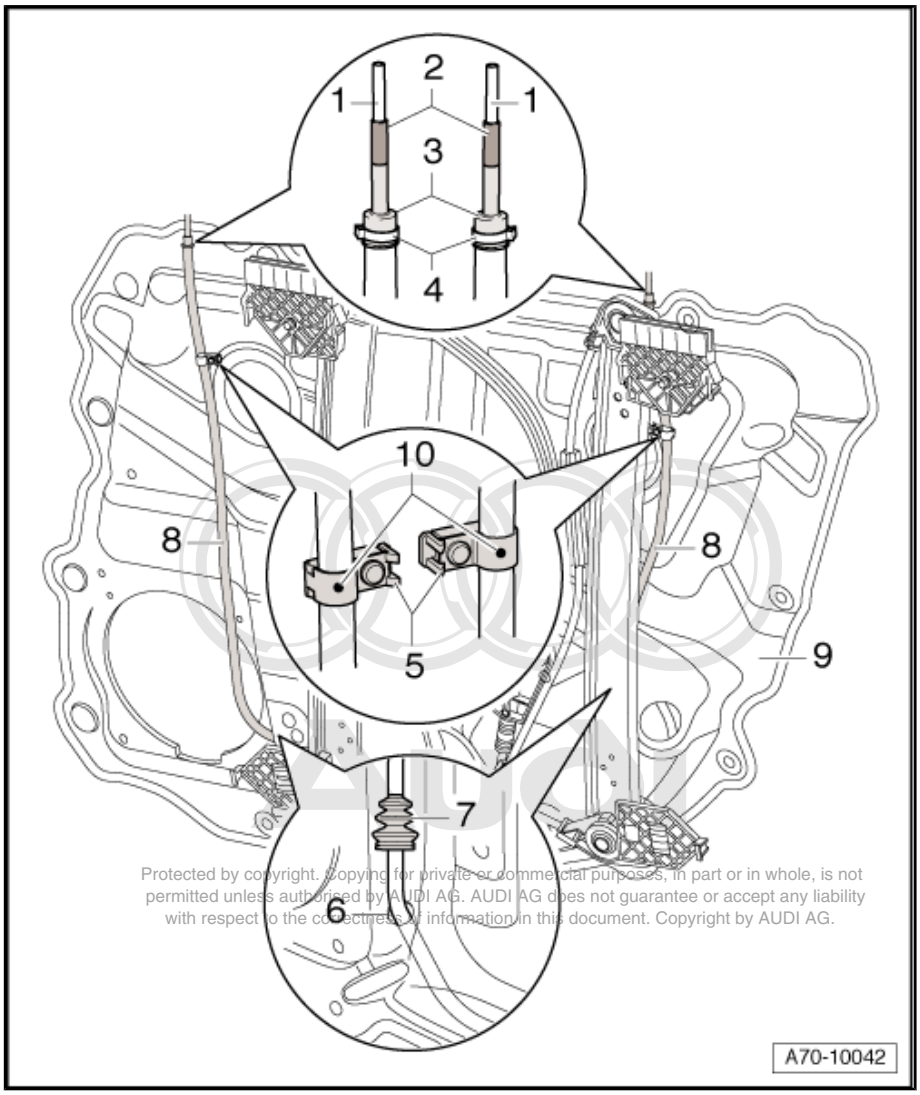

Protected by copyright. Copying for private or commercial purposes, in part or in whole, is not permitted unless authorised by AUDI AG. AUDI AG does not guarantee or accept any liability with respect to the correctness of information in this document. Copyright by AUDI AG.

– Unscrew the bolts -3-.

– Pull the electric sun blind drive unit -1- with the guide tubes -2- out of the assembly mount -4-.

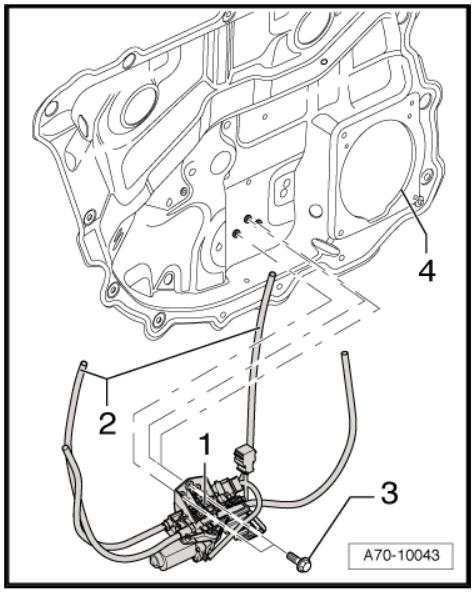

Installing

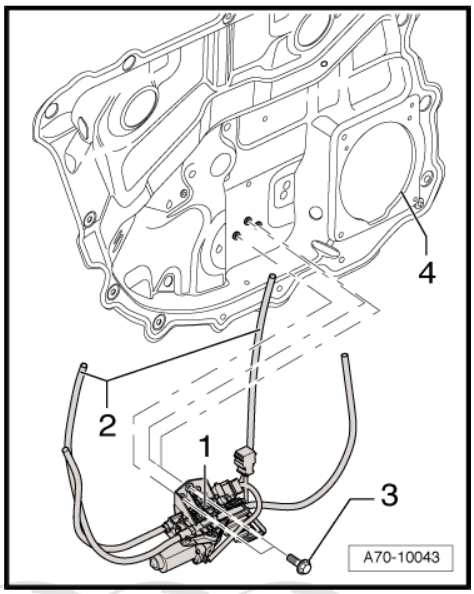

Note

New components: Remove the electric sun blind drive unit from the packaging at both guide tubes at the same time.

– Slide the electric sun blind drive unit -1- with the guide tubes -2- into the assembly mount -4-.

– Loosely screw in the bolts -3-.

– Turn the assembly mount onto the back.

– Slip the rubber grommets -7- (2x) over the guide tubes -8-.

– Press the rubber grommets -7- (2x) into the penetrations -6-.

– Vehicles with long wheelbase: Slide the clamps -5- (2x) over the guide tubes -8- such that they face one another (Fig.).

– Vehicles with short wheelbase: Slide the clamps -5- (2x) over the guide tubes -8- such that they face outwards.

– The clamps -5- must engage with the retainer tabs -10-.

– Insert the thread of the clamps -5- in the assembly mount -9-.

– Loosely screw in the nuts of the clamps -5- on the front.

– Attach the end caps -3- (2x).

– Position the hose clamps -4- (2x) such that they face outwards (Fig.).

This document is copyright. Copying for private or commercial purposes, in part or in whole, is not permitted unless authorised by AUDI AG. AUDI AG does not guarantee or accept any liability with respect to the correctness of information in this document. Copyright by AUDI AG.

1 - Shaft

2 - Protective sleeves

3 - End caps

4 - Hose clamps

5 - Clamps

- ❑ The clamps face inwards on vehicles with long wheelbase (as shown in Fig.).
- ❑ The clamps face outwards on vehicles with short wheelbase.

6 - Penetrations in assembly mount

7 - Rubber grommet

8 - Guide tubes

9 - Assembly mount

10 - Retainer tabs

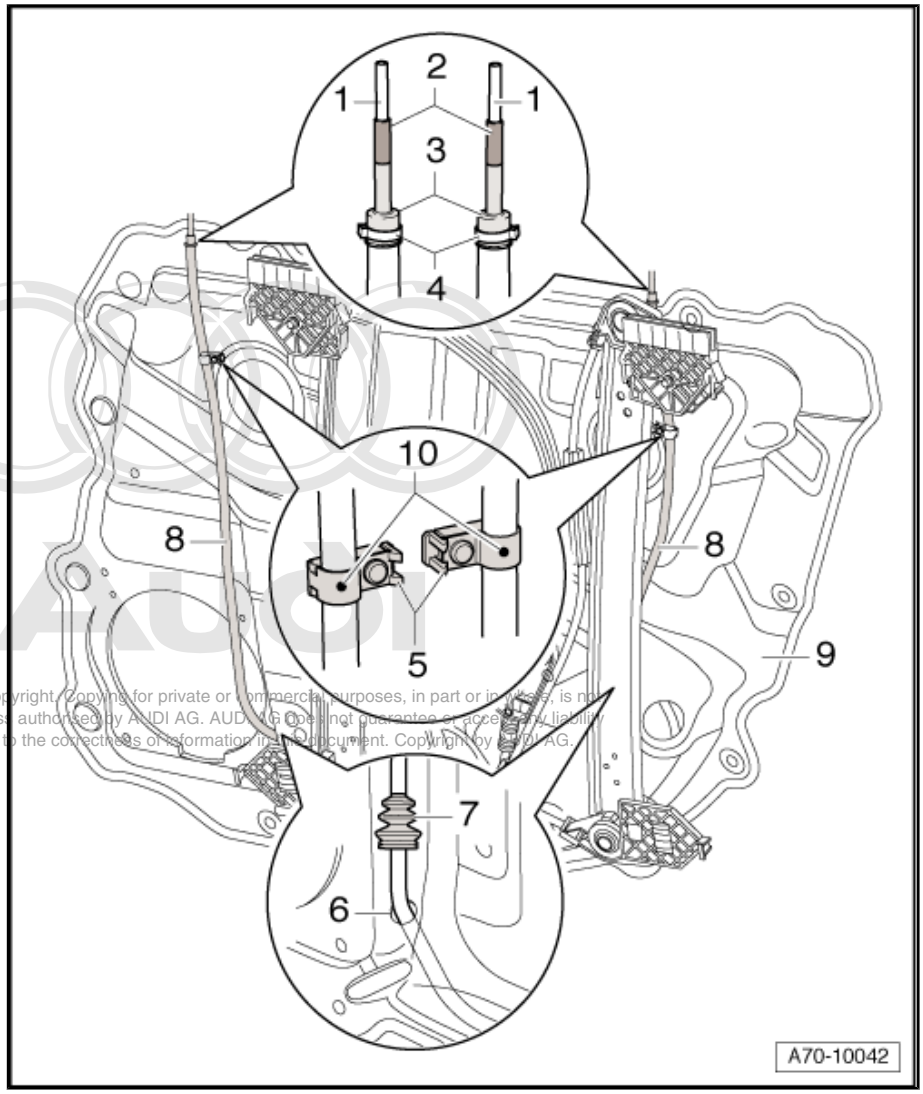

Protected by copyright. Copying for private or commercial purposes, in part or in whole, is not permitted unless authorised by AUDI AG. AUDI AG does not guarantee or accept any liability with respect to the correctness of information in this document. Copyright by AUDI AG.

– Attach the guide sleeves -1-.

– Install the rear assembly mount ⇒ Rep. gr. 58 . In doing so, guide the shafts from underneath into the guide sleeves -T40077- -1-.

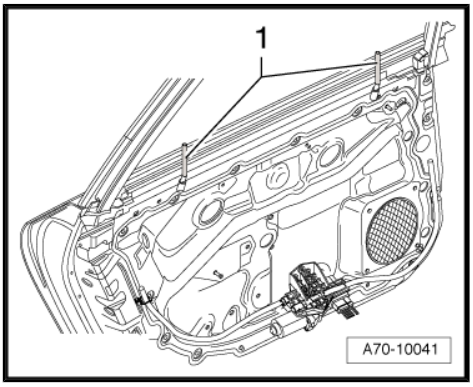

– Screw on the assembly mount. 3.5 Nm.
– Tighten the bolts -3-. 4 Nm

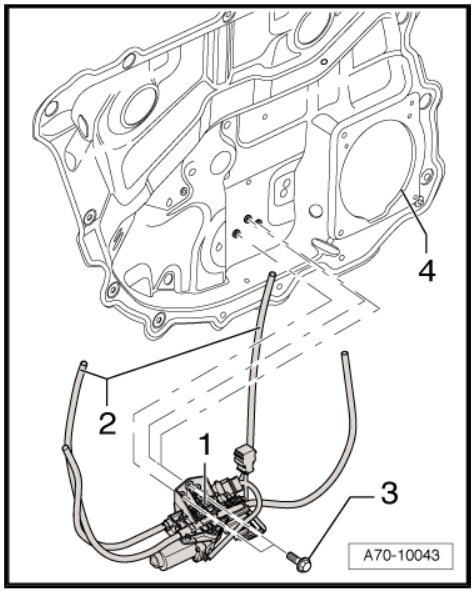

– Tighten the nuts -3-. 4 Nm.
– Fit the cable ties -2- at the conduits -5- and at the wiring harness.
– Fit the cable ties at the same positions as those unfastened or severed prior to removal.
– Plug in the connector -4- to the electric sun blind drive unit -1-.

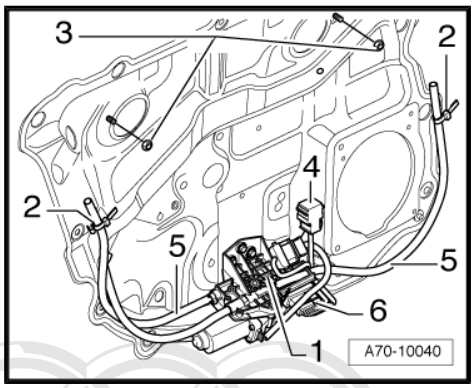

– Remove the guide sleeves -T40077- -1-.
– Attach the protective sleeves ⇒ Item 2 (page 207) .
– The protective sleeves must not rest on the door frame, but must rather be pushed through the hole as far as the end caps ⇒ Item 3 (page 207) .
– Install the electric sun blind housing ⇒ page 200 .

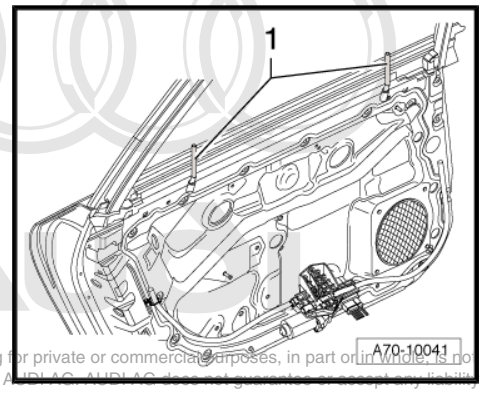

Protected by copyright. Copying for private or commercial purposes, in part or in whole, is not permitted unless authorised by AUDI AG. AUDI AG does not guarantee or accept any liability with respect to the correctness of information in this document. Copyright by AUDI AG.

2.18.4 Removing and installing side roller blind control unit -J719-

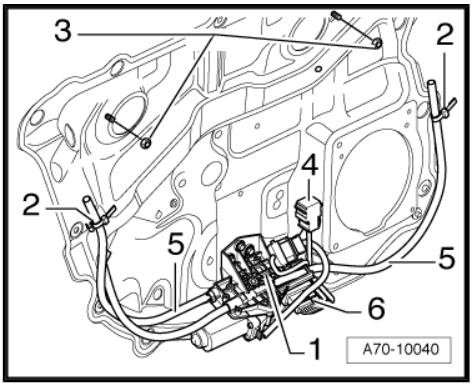

- Remove the door trim ⇒ page 189 .
- Remove the electric sun blind housing ⇒ page 200 .
- Remove the electric sun blind drive unit ⇒ page 203 .
- Release the side roller blind control unit -J719- -8- and slide the control unit -J719- -8- out of the mount.

Note

The software version is indicated as a three-digit number in small print after the genuine part number. The vehicle must not be fitted with a software version less than 004.

Protected by copyright. Copying for private or commercial purposes, in part or in whole, is not permitted unless authorised by AUDI AG. AUDI AG does not guarantee or accept any liability with respect to the correctness of information in this document. Copyright by AUDI AG.

3 Dash panel

3.1 Exploded view of fitting locations

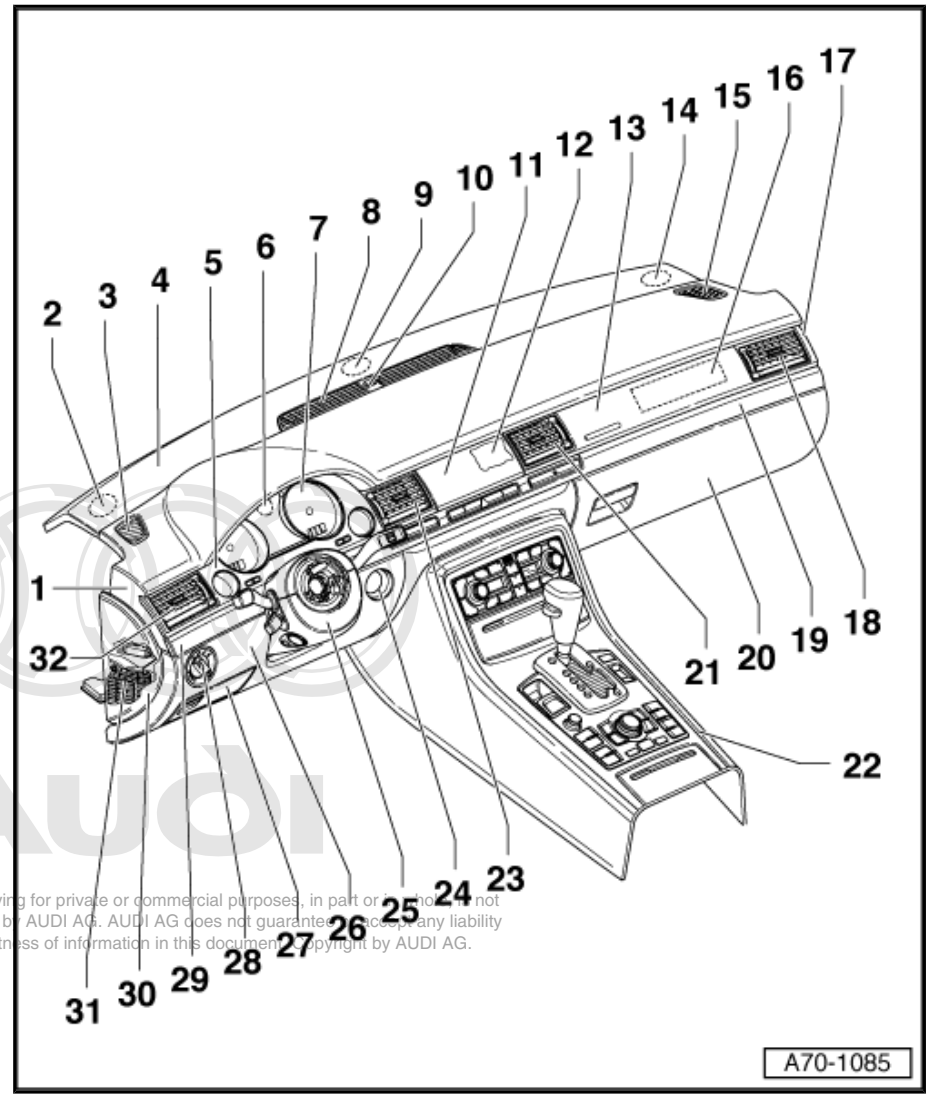

Protected by copyright. Copying for private or commercial purposes, in part or in whole, is not permitted unless authorised by AUDI AG. AUDI AG does not guarantee or accept any liability with respect to the correctness of information in this document. Copyright by AUDI AG.

1 - Dash panel

- ❑ Removing and installing ⇒ page 224

2 - Loudspeaker

- ❑ Removing and installing ⇒ Rep. gr. 91

3 - Left defroster vent

- ❑ Removing and installing ⇒ page 219

4 - Indirect ventilation trim panel

- ❑ Removing and installing ⇒ page 221

5 - Dash panel insert trim panel

- ❑ Removing and installing ⇒ page 214

6 - Front parking aid warning buzzer -H22- and headlight range control unit -J431-

- ❑ Removing and installing ⇒ Electrical system; Rep. gr. 94

7 - Dash panel insert

- ❑ Removing and installing ⇒ Electrical system; Rep. gr. 90

8 - Centre defroster vent

- ❑ Removing and installing ⇒ page 220

9 - Loudspeaker

- ❑ Removing and installing ⇒ Rep. gr. 91

10 - Sunlight penetration photosensor -G107-

- ❑ Removing and installing ⇒ page 220

11 - Trim panel for display unit for front information display and operating unit control unit -J685-

- ❑ Removing and installing ⇒ page 216

12 - Display unit for front information display and operating unit control unit -J685-

- ❑ Removing and installing ⇒ Rep. gr. 91

13 - Trim panel above glove compartment

- ❑ Removing and installing ⇒ page 217

14 - Loudspeaker

- ❑ Removing and installing ⇒ Rep. gr. 91

15 - Right defroster vent

- ❑ Removing and installing ⇒ page 219

16 - Front passenger airbag unit
- ❑ Removing and installing ⇒ page 130

17 - Right dash panel end trim
- ❑ Removing and installing ⇒ page 223

18 - Dash panel vent
- ❑ Removing and installing ⇒ page 213

19 - Trim panel with switch module on right
- ❑ Removing and installing ⇒ page 212

20 - Glove compartment
- ❑ Removing and installing ⇒ page 5

21 - Dash panel vent
- ❑ Removing and installing ⇒ page 213

22 - Centre console
- ❑ Removing and installing ⇒ page 19

23 - Dash panel vent
- ❑ Removing and installing ⇒ page 213

24 - Entry and start authorisation switch -E415-
- ❑ Removing and installing ⇒ Electrical system; Rep. gr. 94

25 - Trim for steering column
- ❑ Removing and installing ⇒ page 12

26 - Driver side storage compartment
- ❑ Removing and installing ⇒ page 9

27 - Storage box
- ❑ Removing and installing ⇒ page 11

28 - Light switch
- ❑ Removing and installing ⇒ Electrical system; Rep. gr. 96

Protected by copyright. Copying for private or commercial purposes, in part or in whole, is not permitted unless authorised by AUDI AG. AUDI AG does not guarantee or accept any liability with respect to the correctness of information in this document. Copyright by AUDI AG.

29 - Left trim panel
- ❑ Removing and installing ⇒ page 211

30 - Left dash panel end trim
- ❑ Removing and installing ⇒ page 223

31 - Left/right fuse box
- ❑ Removing and installing ⇒ Electrical system; Rep. gr. 97

32 - Dash panel vent
- ❑ Removing and installing ⇒ page 213

3.2 Removing and installing left trim panel

Special tools and workshop equipment required

♦ Removal wedge - 3409-

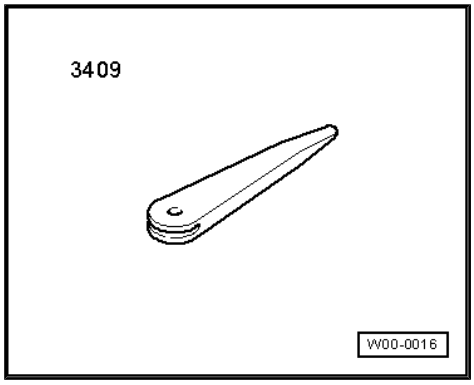

Removing

– Carefully separate the trim panel -1- from the dash panel using the removal wedge -3409- -arrows-.

Installing

Install in reverse order.

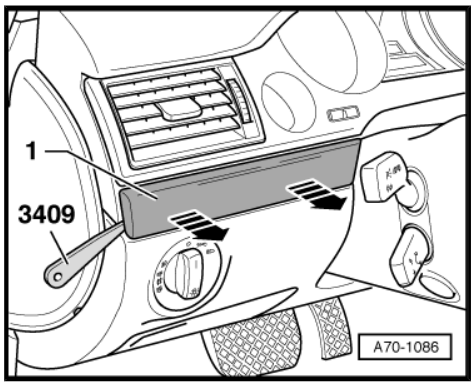

3.3 Removing and installing trim panel with switch module on right

Special tools and workshop equipment required

♦ Removal wedge -3409-

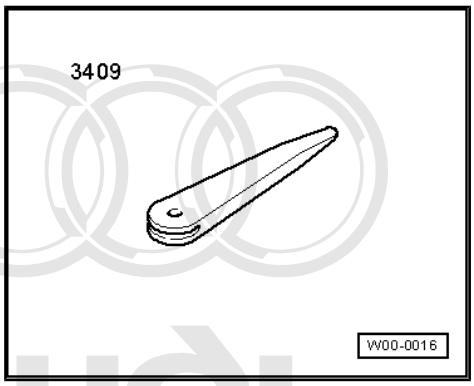

Removing

– Open the coin tray.

– Slide the trim for the coin tray to the left out of the fastener -arrow- and detach.

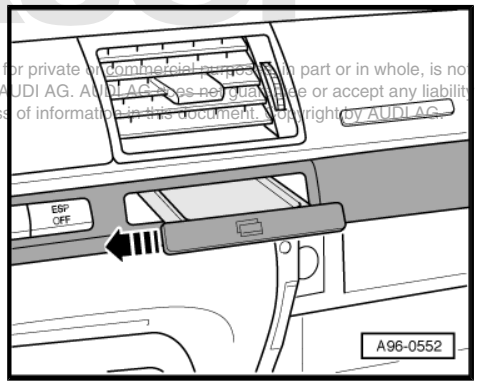

Protected by copyright. Copying for private or commercial purposes, in part or in whole, is not permitted unless authorised by AUDI AG. AUDI AG does not guarantee or accept any liability with respect to the correctness of information in this document. Copyright by AUDI AG.

– Open the glove compartment.
– Starting from above the glove compartment, carefully separate the trim panel with the switch module -1- from the dash panel using the removal wedge -3409- .
– Detach the trim panel with switch module in -arrow direction-.

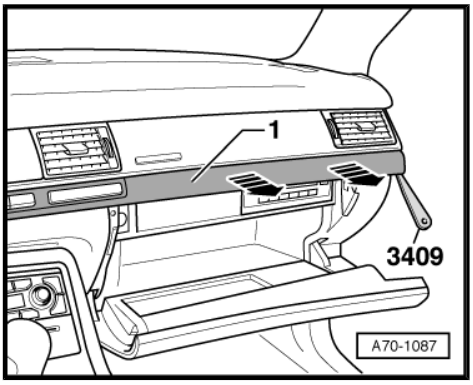

Note

Take particular care when releasing the clip at the driver side end of the trim panel.

– Unplug the connector.

Installing

Install in reverse order, paying attention to the following:

– When inserting the trim panel -1- with switch module, make sure the two fasteners in the centre of the panel are inserted between the dash panel and the monitor housing -arrows-.

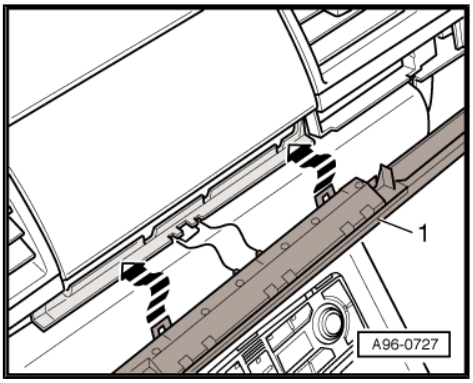

3.4 Removing and installing dash panel vent

Special tools and workshop equipment required

♦ Hook -3438-

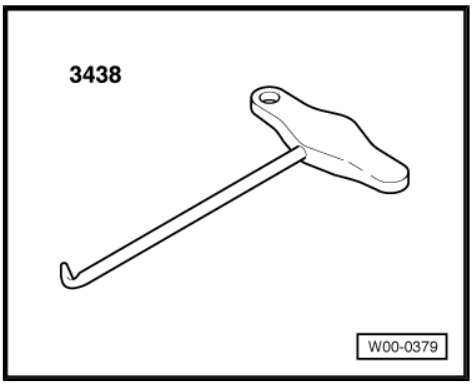

Protected by copyright. Copying for private or commercial purposes, in part or in whole, is not permitted unless authorised by AUDI AG. AUDI AG does not guarantee or accept any liability with respect to the correctness of information in this document. Copyright by AUDI AG.

Removing

– Turn the knurled wheel -3- of the air vent fully up.
– Above the bottom slat -2-, insert a jeweller's screwdriver -1- in each of the two air vent clips.
– Alternately pull the left and right side of the air vent out of the installation opening, leaving the jeweller's screwdrivers in position.

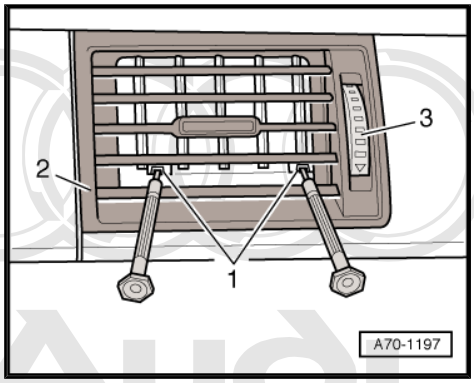

Note

If necessary, use a hook -3438- to pull the air vent out of the opening.

– Unplug the connector at the air vent.

Protected by copyright. Copying for private or commercial purposes, in part or in whole, is not permitted unless authorised by AUDI AG. AUDI AG does not guarantee or accept any liability with respect to the correctness of information in this document. Copyright by AUDI AG.

Installing

Install in reverse order.

3.5 Removing and installing dash panel insert trim panel

Special tools and workshop equipment required

♦ Removal wedge - 3409-

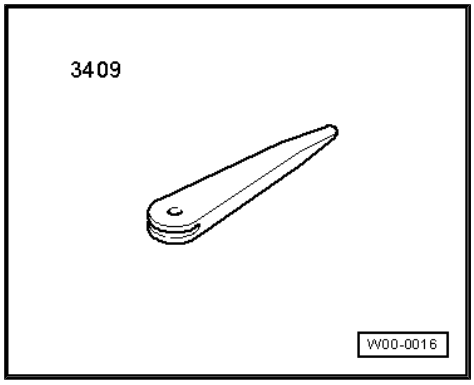

♦ Hook -3438-

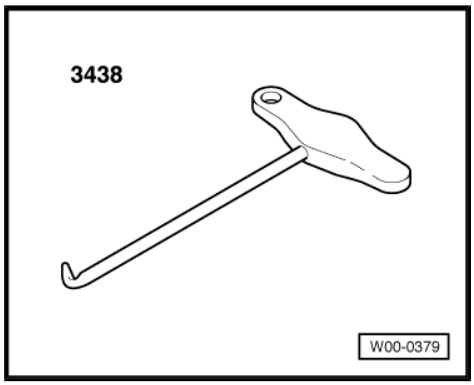

Removing

– Move the steering wheel down and to the rear as far as possible, making use of the full range of the steering column adjuster.
– Switch off the ignition and remove the ignition key.
– Carefully separate the trim panel -1- from the dash panel using the removal wedge -3409- -arrows-.

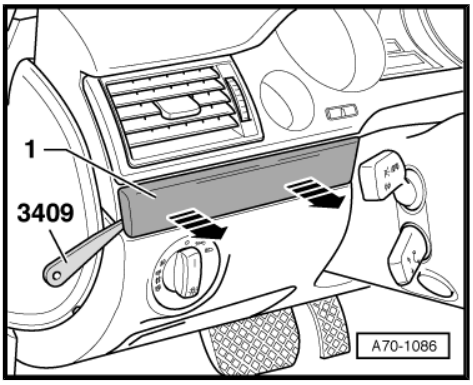

– Open the coin tray.
– Slide the trim for the coin tray to the left out of the fastener -arrow- and detach.

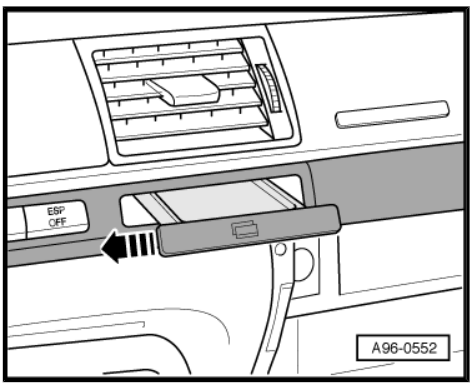

– Open the glove compartment.
– Starting from above the glove compartment, carefully separate the trim panel -1- with switch module from the dash panel using the removal wedge -3409- .
– Detach the trim panel with switch module in -arrow direction-.

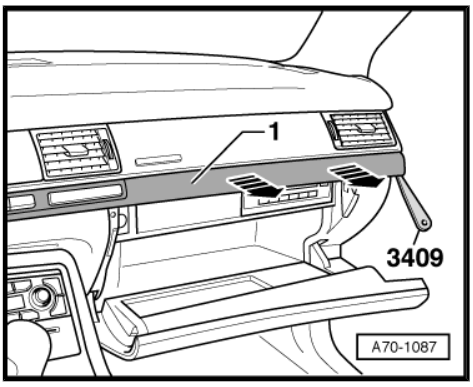

Note

Take particular care when releasing the clip at the driver side end of the trim panel.

– Unplug the connector.

– Turn the knurled wheel -3- of the air vent on the left next to the dash panel insert fully upwards.
– Above the bottom slat -2-, insert a jeweller's screwdriver -1- in each of the two air vent clips.
– Alternately pull the left and right side of the air vent out of the installation opening, leaving the jeweller's screwdrivers in position.

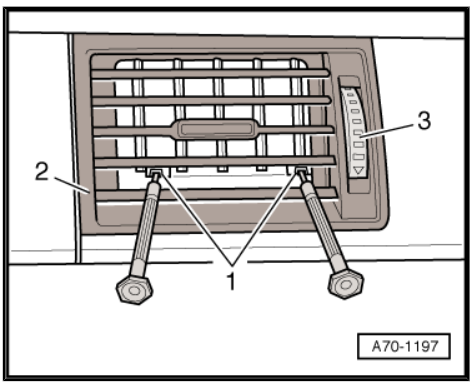

Protected by copyright. Copying or distribution of this document is not permitted unless authorised by AUDI AG. AUDI AG does not guarantee or accept any liability with respect to the correctness of information in this document. Copyright by AUDI AG.

Note

If necessary, use a hook -3438- to pull the air vent out of the opening.

– Unplug the connector at the air vent.
– Repeat the procedure at the air vent on the right next to the dash panel insert.

– Screw out the bolts -arrows-.

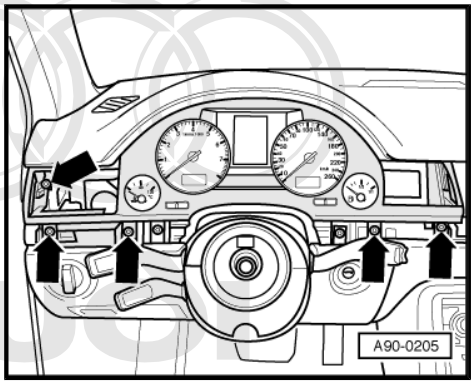

Note

Use adhesive tape to affix a cloth to protect the steering column trim and steering arms.

– Pull the trim slightly away from the dash panel insert.
– Unplug the connectors at the trim for the dash panel insert.
– Engage the turn signal indicator switch in the lower switch position.
– Actuate the flick wipe function and detach the trim for the dash panel insert in this wiper switch position.

Protected by copyright. Copying for private or commercial purposes, in part or in whole, is not permitted unless authorised by AUDI AG. AUDI AG does not guarantee or accept any liability with respect to the correctness of information in this document. Copyright by AUDI AG.

Installing

Install in reverse order.

Tightening torque:

Dash panel insert/trim for dash panel insert to dash panel: 3 Nm

3.6 Removing and installing trim panel for display unit for front information display and operating unit control unit -J685-

Special tools and workshop equipment required

♦ Removal wedge - 3409-

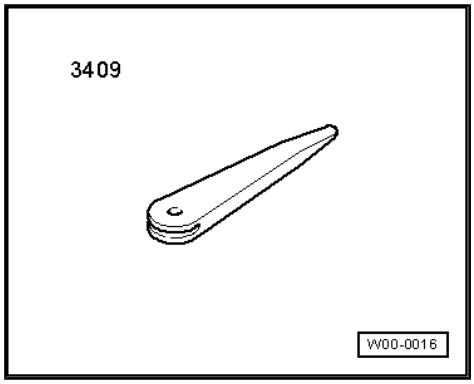

♦ Hook -3438-

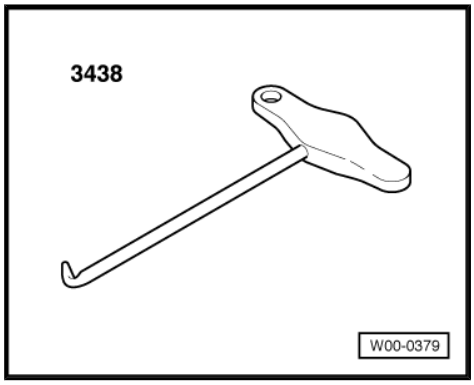

Removing

– Turn the knurled wheel -3- of the left air vent above the glove compartment fully up.
– Above the bottom slat -2-, insert a jeweller's screwdriver -1- in each of the two air vent clips.
– Alternately pull the left and right side of the air vent out of the installation opening, leaving the jeweller's screwdrivers in position.

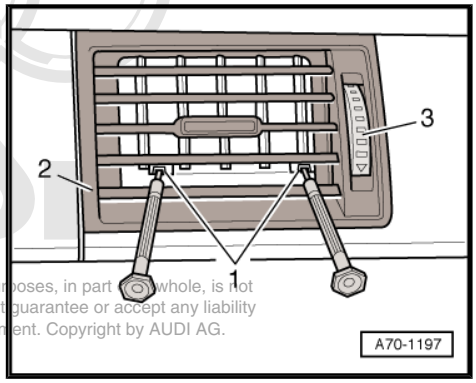

Protected by copyright. Copying for private or commercial purposes, in part or whole, is not permitted unless authorised by AUDI AG. AUDI AG does not guarantee or accept any liability with respect to the correctness of information in this document. Copyright by AUDI AG.

Note

If necessary, use a hook -3438- to pull the air vent out of the opening.

– Unplug the connector at the air vent.
– Repeat the procedure at the air vent on the right next to the dash panel insert.

– Prise off the trim panel at the bottom left and right edge using the removal wedge - 3409- -arrow 1-.
– Pull the trim panel downwards out of the display unit lugs -arrow 2-.

Installing

Install in reverse order.

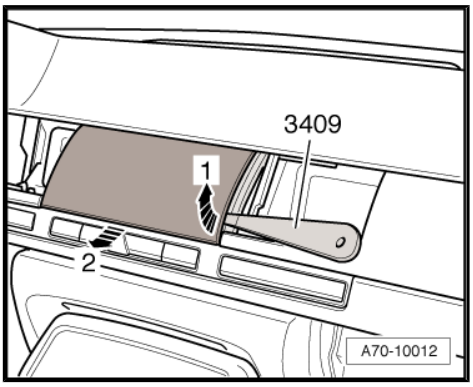

3.7 Removing and installing trim panel above glove compartment

Special tools and workshop equipment required

♦ Removal wedge - 3409-

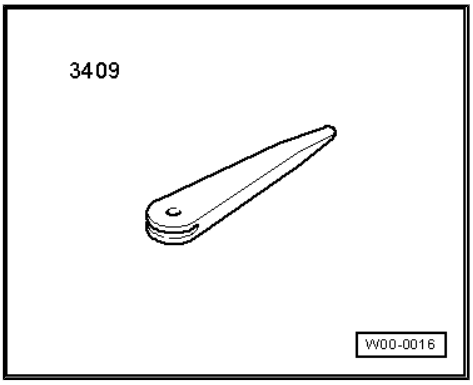

♦ Hook -3438-

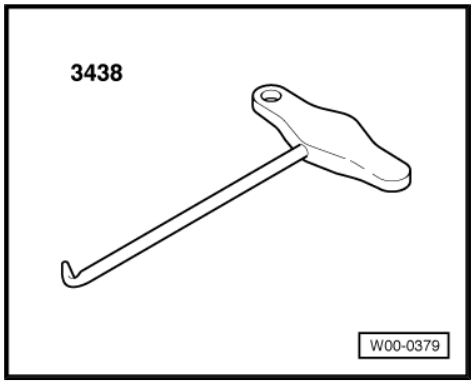

Removing

– Switch off the ignition and remove the ignition key.
– Turn the knurled wheel -3- of the left air vent above the glove compartment fully up.
– Above the bottom slat -2-, insert a jeweller's screwdriver -1- in each of the two air vent clips.
– Alternately pull the left and right side of the air vent out of the installation opening, leaving the jeweller's screwdrivers in position.

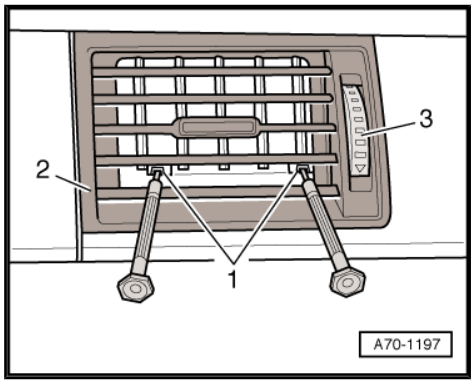

Note

If necessary, use a hook -3438- to pull the air vent out of the opening.

– Unplug the connector at the air vent.
– Repeat the procedure at the right air vent above the glove compartment.

– Open the coin tray.
– Slide the trim for the coin tray to the left out of the fastener -arrow- and detach.

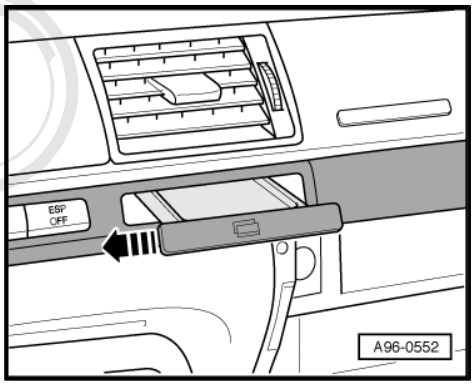

Protected by copyright. Copying for private or commercial purposes, in part or in whole, is not permitted unless authorised by AUDI AG. AUDI AG does not guarantee or accept any liability with respect to the correctness of information in this document. Copyright by AUDI AG.

– Open the glove compartment.

– Starting from above the glove compartment, carefully separate the trim panel -1- with switch module from the dash panel using the removal wedge -3409- .

– Detach the trim panel with switch module in -arrow direction-.

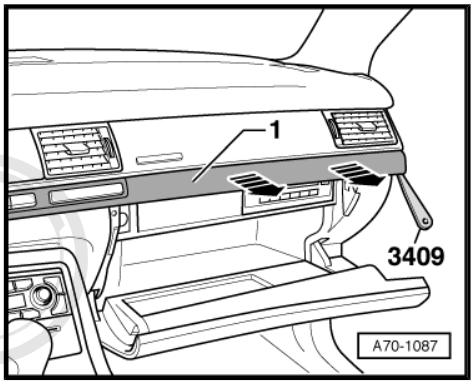

Note

Take particular care when releasing the clip at the driver side end of the trim panel.

– Unplug the connector.

– Remove the coin tray.

– Screw out the bolts -arrows-.

– Detach the trim panel -1- above the glove compartment.

Protected by copyright. Copying for private or commercial purposes, in part or in whole, is not permitted unless authorised by AUDI AG. AUDI AG does not guarantee or accept any liability with respect to the correctness of information in this document. Copyright by AUDI AG.

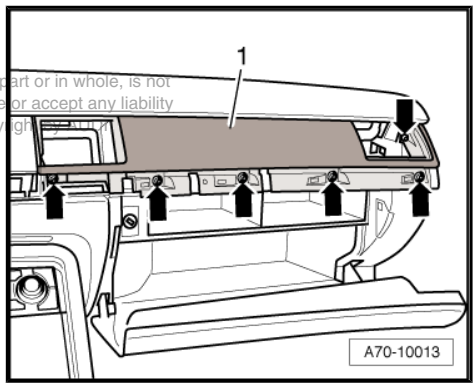

Installing

Install in reverse order, paying attention to the following:

– When inserting the trim panel -1- with switch module, make sure the two fasteners in the centre of the panel are inserted between the dash panel and the monitor housing -arrows-.

Tightening torque:

Trim panel above glove compartment to dash panel: 2.5 Nm

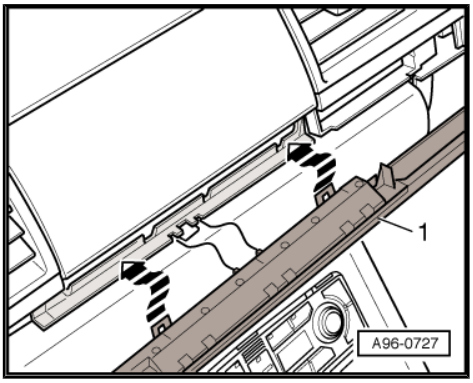

3.8 Removing and installing left or right defroster vent

Special tools and workshop equipment required

♦ Front end hook -3370-

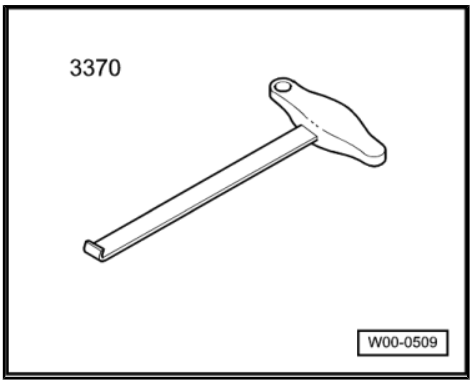

Removing

– Carefully pull off the defroster vent -1- with the front end hook -3370- in -arrow direction-.

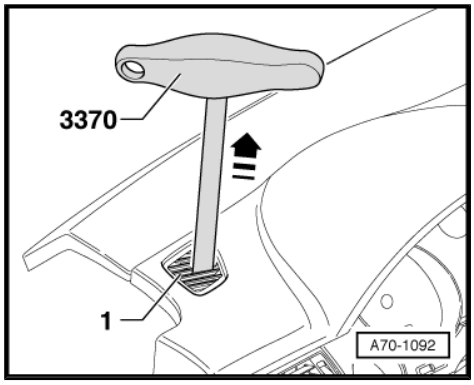

Installing

– Engage the hooks -1- of the defroster vent in the dash panel opening.

– Then engage the defroster vent -3- in the dash panel with the retaining spring -2-.

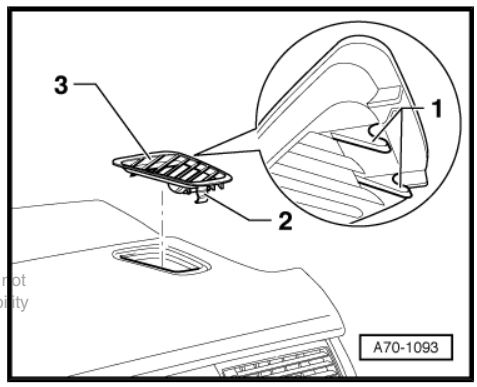

Protected by copyright. Copying for private or commercial purposes, in part or in whole, is not permitted unless authorised by AUDI AG. AUDI AG does not guarantee or accept any liability with respect to the correctness of information in this document. Copyright by AUDI AG.

3.9 Removing and installing sunlight penetration photosensor -G107- with cap

Special tools and workshop equipment required

♦ Feeler gauge

Removing

– Unclip the cap -1- with a 0.35 mm feeler gauge -2- from the centre defroster vent -arrow-.

– Prise out the sunlight penetration photosensor -G107- -Item 3- and unplug the connector.

Installing

Install in reverse order.

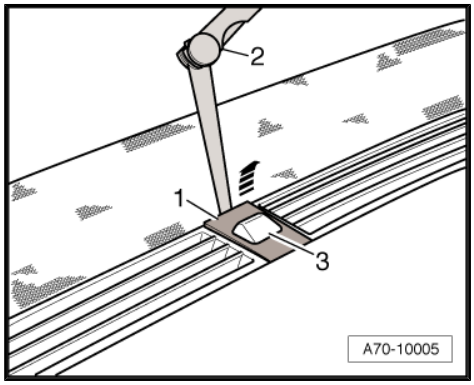

3.10 Removing and installing centre defroster vent

Special tools and workshop equipment required

♦ Removal wedge -3409-

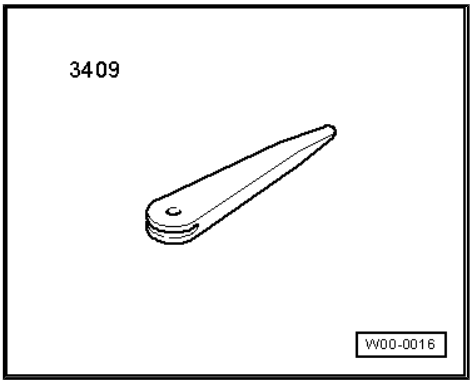

♦ Feeler gauge

Removing

– Unclip the cap -1- with a 0.35 mm feeler gauge -2- from the centre defroster vent -arrow-.

– Prise out the sunlight penetration photosensor -G107- -Item 3- and unplug the connector.

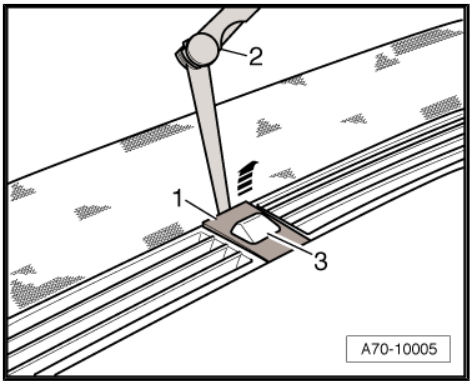

– Screw out the bolt -1-.

– Prise the centre defroster vent -2- as shown out of the dash panel using the removal wedge -3409- .

Installing

Install in reverse order.

Tightening torque:

Centre defroster vent to dash panel: 2 Nm

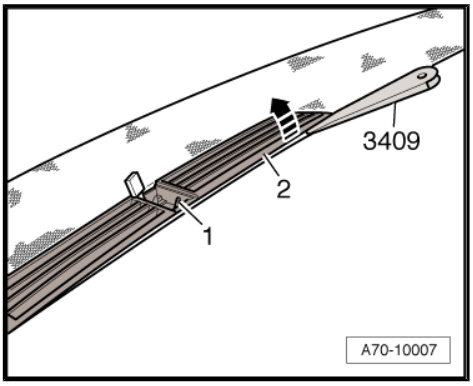

3.11 Removing and installing indirect ventilation trim panel

Special tools and workshop equipment required

♦ Removal wedge -3409-

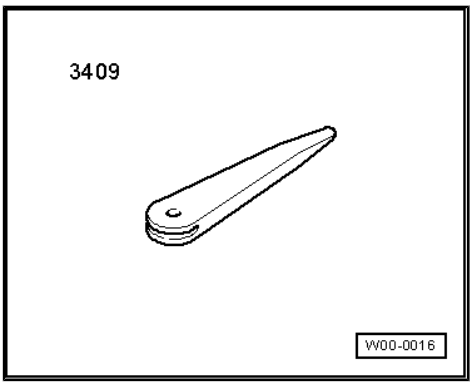

Protected by copyright. Copying for private or commercial purposes, in part or in whole, is not permitted unless authorised by AUDI AG. AUDI AG does not guarantee or accept any liability with respect to the correctness of information in this document. Copyright by AUDI AG.

♦ Feeler gauge

Removing

– Unclip the cap -1- with a 0.35 mm feeler gauge -2- from the centre defroster vent -arrow-.
– Prise out the sunlight penetration photosensor -G107- -Item 3- and unplug the connector.

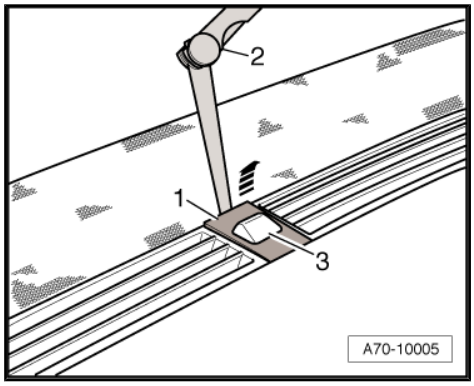

– Screw out the bolt -1-.
– Prise the centre defroster vent -2- as shown out of the dash panel using the removal wedge -3409- .

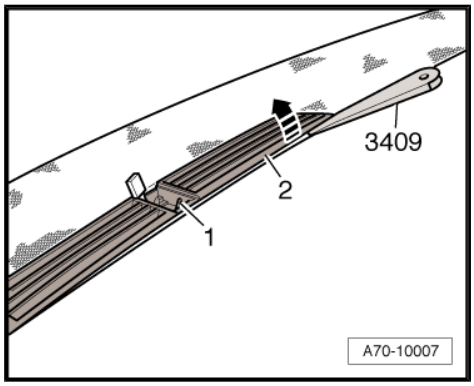

– Screw out the bolts -2-.
– Detach the indirect ventilation trim panel -1-.

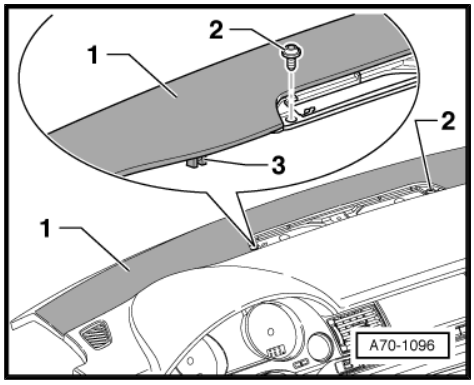

Installing

Install in reverse order, paying attention to the following:

– Make sure the clips -3- engage in the dash panel mounts.

Tightening torque:

Indirect ventilation trim panel to dash panel: 2 Nm

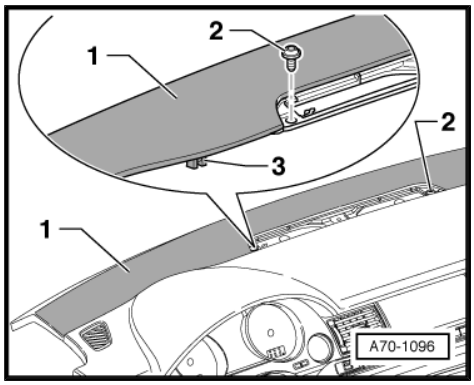

Protected by copyright. Copying for private or commercial purposes, in part or in whole, is not permitted unless authorised by AUDI AG. AUDI AG does not guarantee or accept any liability with respect to the correctness of information in this document. Copyright by AUDI AG.

3.12 Removing and installing left dash panel end trim

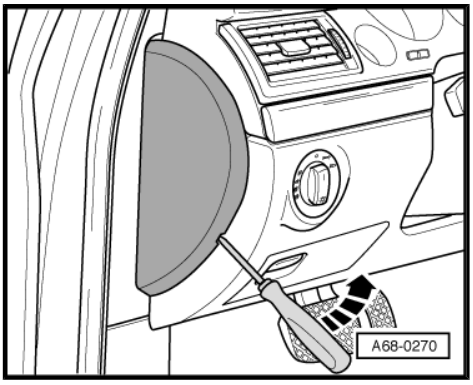

Removing

– Use a screwdriver to prise off the left dash panel end trim -arrow-.

Installing

Install in reverse order.

3.13 Removing and installing right dash panel end trim

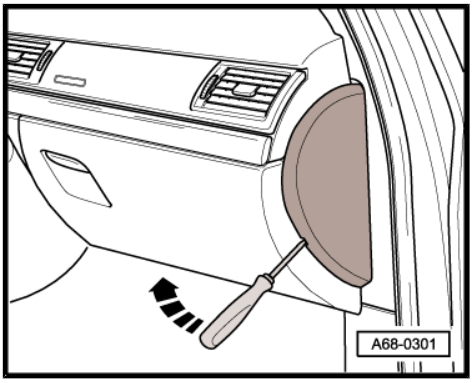

Removing

– Use a screwdriver to prise off the right dash panel end trim -arrow-.

Installing

Install in reverse order.

Protected by copyright. Copying for private or commercial purposes, in part or in whole, is not permitted unless authorised by AUDI AG. AUDI AG does not guarantee or accept any liability with respect to the correctness of information in this document. Copyright by AUDI AG.

3.14 Removing and installing dash panel

Special tools and workshop equipment required

- Removal lever -80-200-
- Removal wedge -3409-
- Hook -3438-
- Protective cap - VAS 6223/9-
- Screwdriver T8 -T40056 A-
- Radio release tool - T10057-

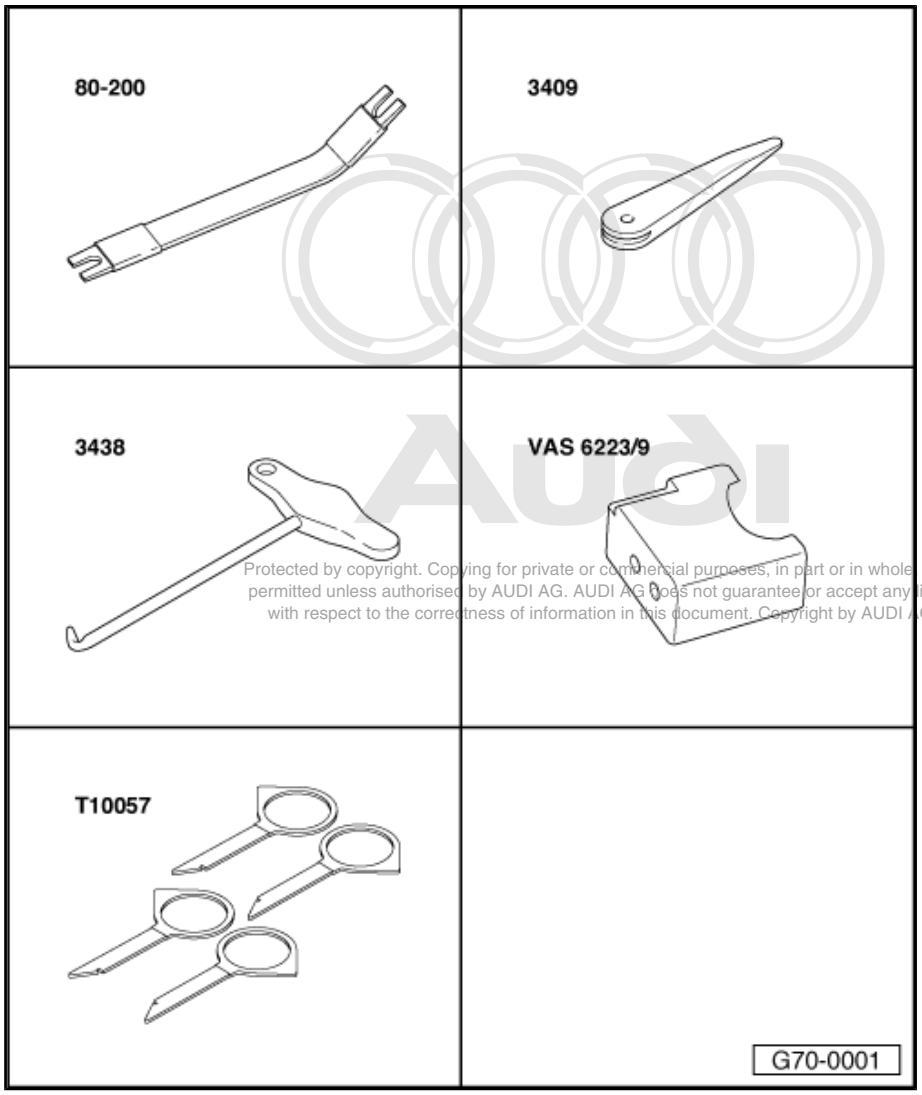

Protected by copyright. Copying for private or commercial purposes, in part or in whole, is not permitted unless authorised by AUDI AG. AUDI AG does not guarantee or accept any liability with respect to the correctness of information in this document. Copyright by AUDI AG.

3.14.1 Removing

- The display unit for front information display and operating unit control unit -J685- (MMI monitor) must be closed.

Note

All cable ties unfastened or severed on removal are to be re-attached in the same position on installation.

– Move the steering wheel down and to the rear as far as possible, making use of the full range of the steering column adjuster.

– Move the front seats to the rearmost position and set the backrests to 45° position.

WARNING

- *Heed the safety regulations for pyrotechnic components ⇒ page 94 .*
- *Heed the assignment of the airbag unit to the dash panel ⇒ Parts catalogue .*

– With the ignition switched on, disconnect the battery earth wire ⇒ Electrical system; Rep. gr. 27 .

– Remove the airbag unit and the steering wheel ⇒ page 123 .

– Use a screwdriver to prise off the left dash panel end trim -arrow-.

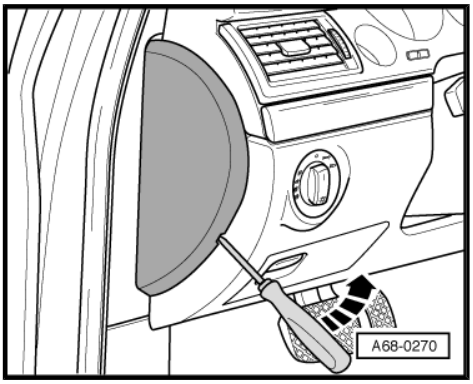

– Carefully separate the trim panel -1- from the dash panel using the removal wedge -3409- -arrows-.

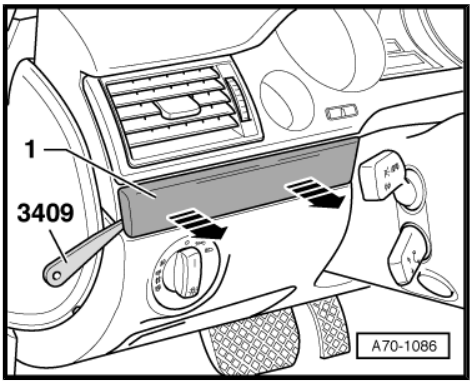

– Open the coin tray.

– Slide the trim for the coin tray to the left out of the fastener -arrow- and detach.

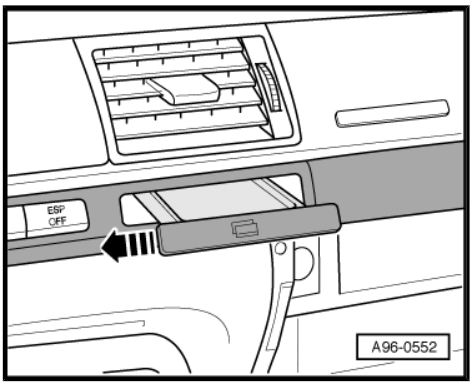

Protected by copyright. Copying for private or commercial purposes, in part or in whole, is not permitted unless authorised by AUDI AG. AUDI AG does not guarantee or accept any liability with respect to the correctness of information in this document. Copyright by AUDI AG.

– Open the glove compartment.

– Starting from above the glove compartment, carefully separate the trim panel -1- with switch module from the dash panel using the removal wedge -3409- .

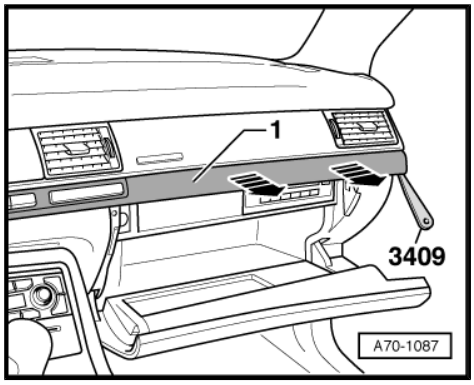

Note

Take particular care when releasing the clip at the driver side end of the trim panel.

– Unplug the connector.

– Unscrew the driver side storage compartment -arrows-.

– Unplug the connectors.

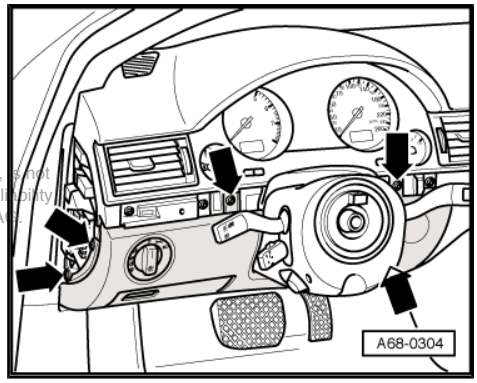

Protected by copyright. Copying for private or commercial purposes, in part or in whole, is not permitted unless authorised by AUDI AG. AUDI AG does not guarantee or accept any liability with respect to the correctness of information in this document. Copyright by AUDI AG.

– Vehicles with knee airbag: Pull the catch -2- in arrow direction and unplug the connectors -1- and -3-.

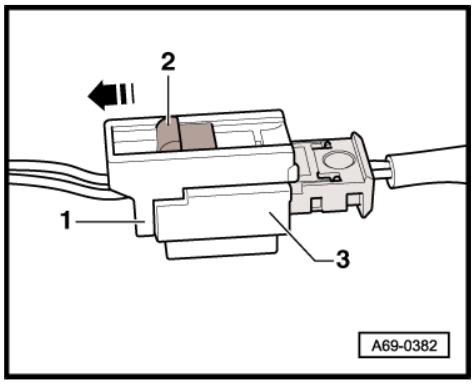

– Use a screwdriver to prise off the right dash panel end trim -arrow-.

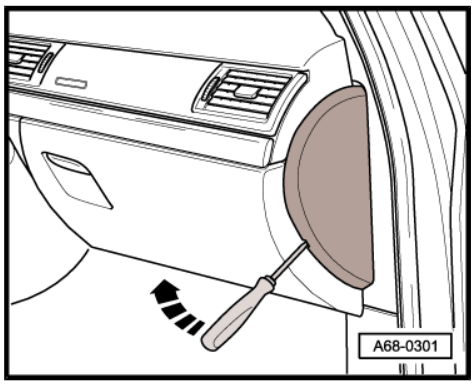

– If applicable, remove the CD changer as follows:
– Insert 2 keys of the radio release tool -T10057- in the front of the CD changer.
♦ Top L - top left
♦ Top R - top right
– Pull the CD changer out of the mounting frame.
– Unplug the connector.
– Unplug the fibre optic cable connector.

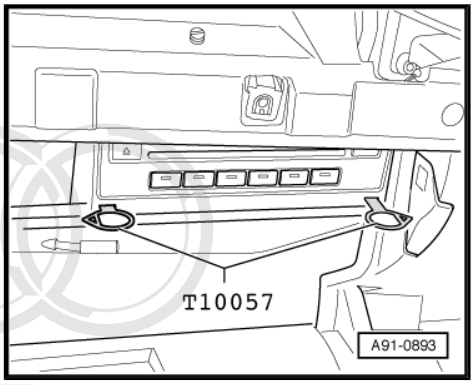

– Seal the open wiring harness connector -2- of the fibre optic cable with the protective cap -VAS 6223/9- -Item 1-.

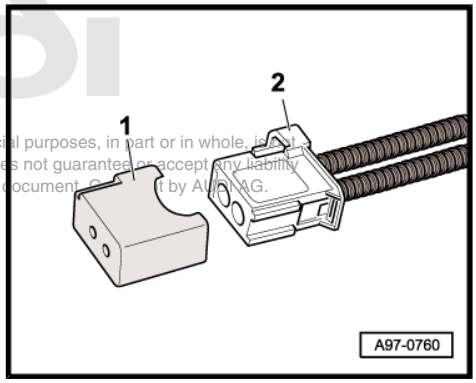

Note

The protective cap prevents contamination of or mechanical damage to the end face of the fibre optic cable which would impair light transmission.

Protected by copyright. Copying for private or commercial purposes, in part or in whole, is not permitted unless authorised by AUDI AG. AUDI AG does not guarantee or accept any liability with respect to the correctness of information in this document. Copyright by AUDI AG.

– Press the catches at the CD changer and pull the release tool out of the CD changer.

– If applicable, remove the storage compartment in the glove compartment. To do so, use a small screwdriver to release the retainer tabs -1- and -2- in -arrow direction-.
– Pull the storage compartment out of the glove compartment.

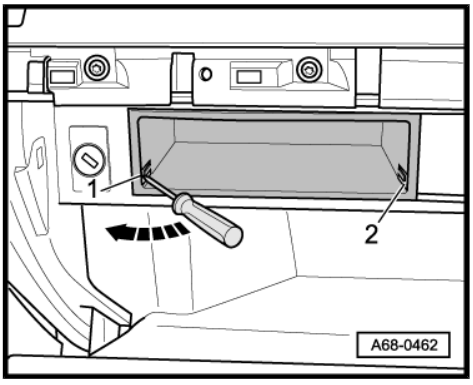

– Screw out the bolts -arrows-.
– Screw out the bolts -1- and -2-.

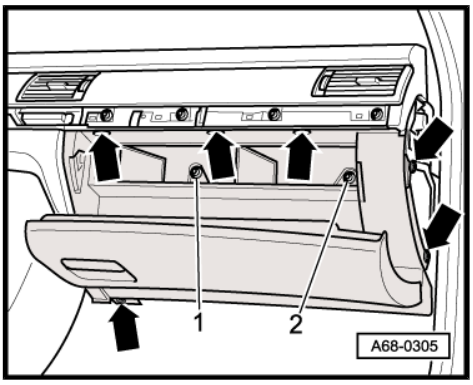

– Unplug the connector -1- for the glove compartment wiring harness -2- from the supply lead -3-.

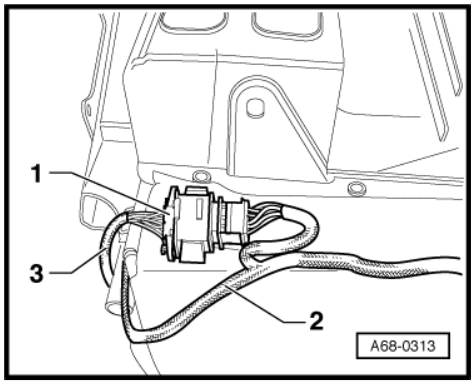

– Vehicles with knee airbag: Pull the catch -2- in arrow direction and unplug the connectors -1- and -3-.
– Detach the glove compartment.

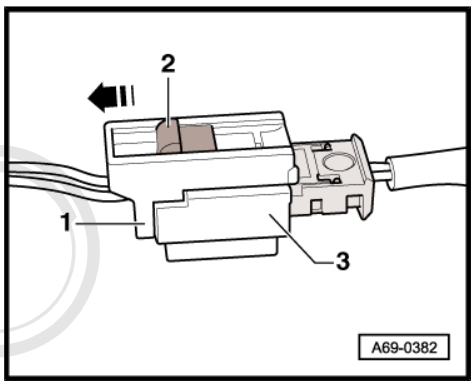

Vehicles with no rear Climatronic operating and display unit

– Open the rear ashtray -2-.
– Detach the trim -1- from the mounting frame -arrow-.
– Close the ashtray.

Protected by copyright. Copying for private or commercial purposes, in part or in whole, is not permitted unless authorised by AUDI AG. AUDI AG does not guarantee or assume any liability with respect to the correctness of information in this document. Copyright by AUDI AG.

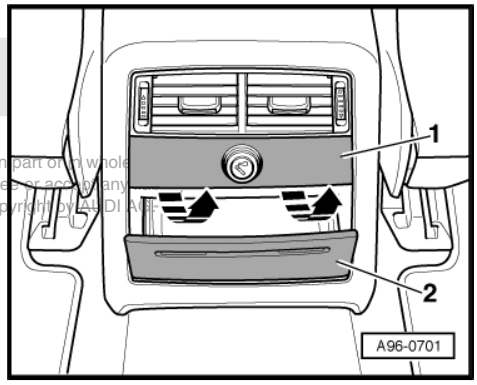

– Detach the ashtray in -arrow direction- from the mounting frame.

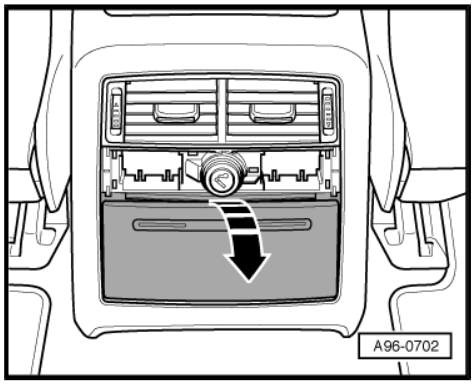

Vehicles with rear Climatronic operating and display unit

– Prise the trim -1- off the mounting frame using the removal wedge -3409- -arrow-.

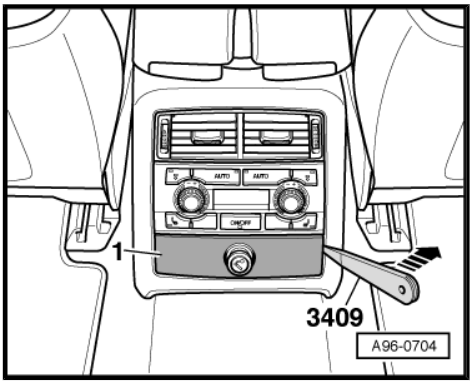

All vehicles (continued)

– Screw out the bolts -arrows-.

– Detach the mounting frame -1- with air vents and ashtray/rear Climatronic operating and display unit.

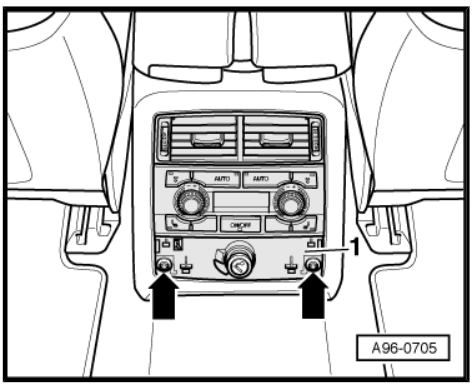

Note

To unplug the connector at the rear Climatronic operating and display unit, press the catch -1-, turn the holder in arrow direction and unplug the connector.

Protected by copyright. Copying for private or commercial purposes, in part or in whole, is not permitted unless authorised by AUDI AG. AUDI AG does not guarantee or accept any liability with respect to the correctness of information in this document. Copyright by AUDI AG.

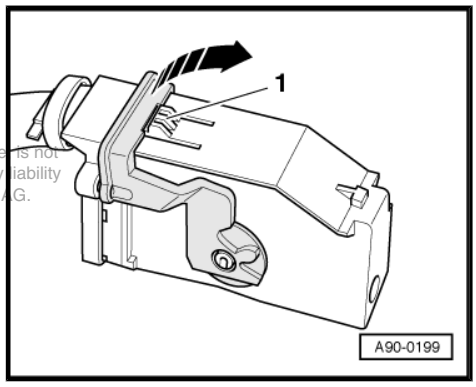

– Unplug the connectors -1 ... 4-.

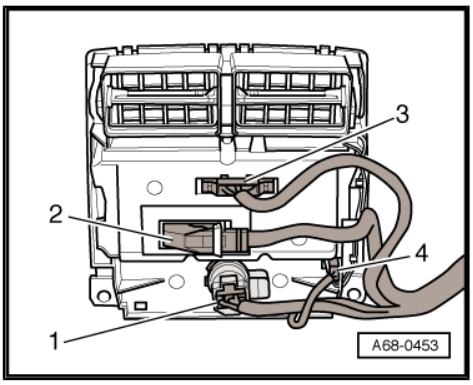

– Unscrew the nuts -arrows- for the rear centre console.

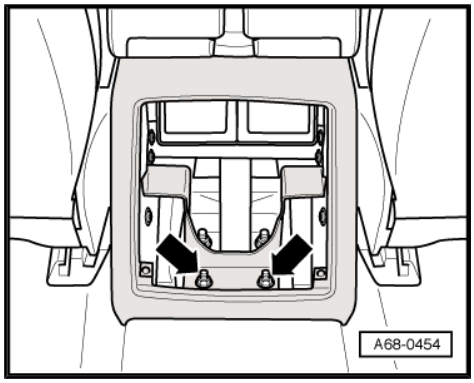

Vehicles with split centre armrest

– Fold the centre armrests upwards.
– Lift off the armrest hinge trim -arrow-.

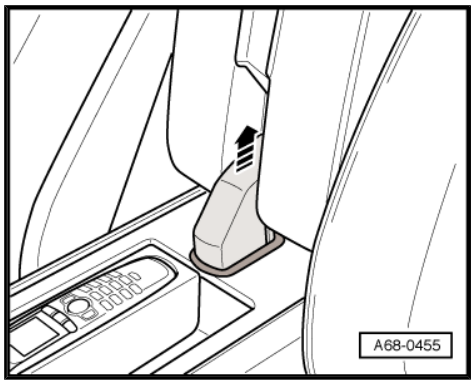

– Screw out the bolts -arrows-.
– Unplug the connectors for the storage compartment light in the centre armrests.
– Lift off the centre armrests.

Vehicles with one-piece centre armrest

– Fold the centre armrest upwards.

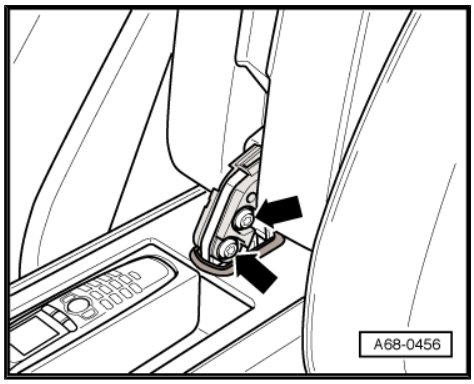

All vehicles (continued)

– Use the removal wedge -3409- to prise the front corners of the storage compartment out of the centre console -arrow 1- and pull the storage compartment forwards -arrow 2-.

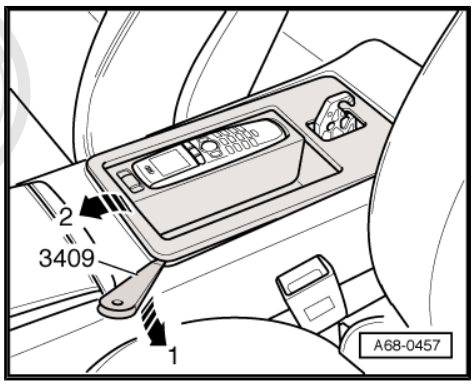

Protected by copyright. Copying for private or commercial purposes, in part or in whole, is not permitted unless authorised by AUDI AG. AUDI AG does not guarantee or accept any liability with respect to the correctness of information in this document. Copyright by AUDI AG.

– Unplug the connectors -1- and -2- and detach the storage compartment.

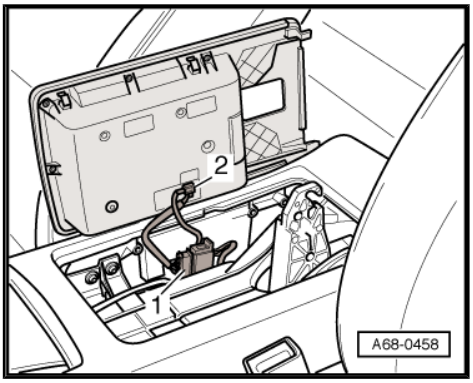

– Unplug the connectors -1-.
– Screw out the bolts -arrows- on either side of the centre console.

Protected by copyright. Copying for private or commercial purposes, in part or in whole, is not permitted unless authorised by AUDI AG. AUDI AG does not guarantee or accept any liability with respect to the correctness of information in this document. Copyright by AUDI AG.

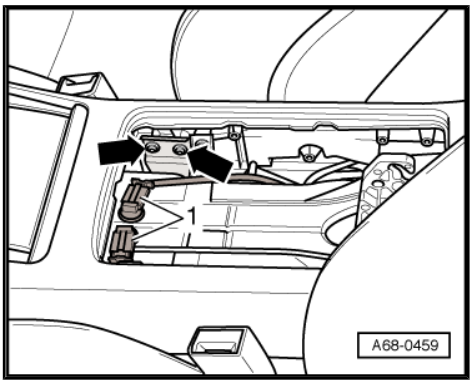

– Press the button -arrow- and take out the front ashtray insert -1-.

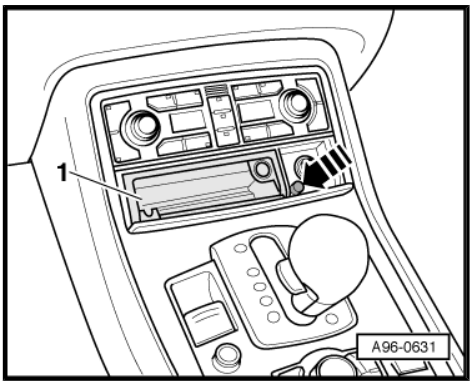

– Screw out the bolt -arrow- and remove the housing for the front ashtray.
– Unplug the connector.

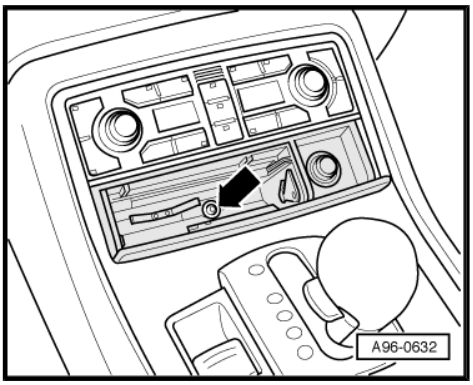

– Lift off the centre console switch trim -arrows-.
– Unplug the connectors.

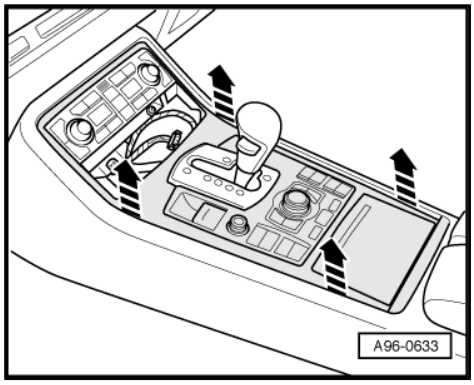

– Screw out the bolts -2-.
– Release the retaining springs -1- with a small screwdriver -arrow-.
– Swivel the top edge of the Climatronic control unit -J255- to the rear.
– Take the Climatronic control unit out of the mount.

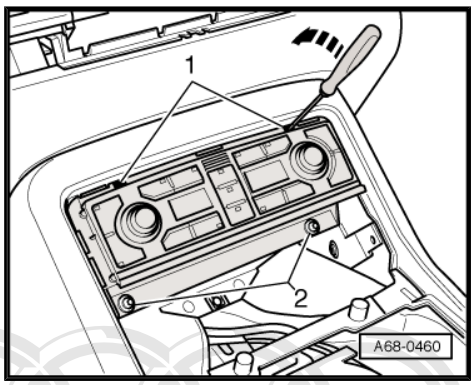

– Unplug the connectors -A ... E- by releasing the retainer tab -G-.
– Unplug the connector -F-.

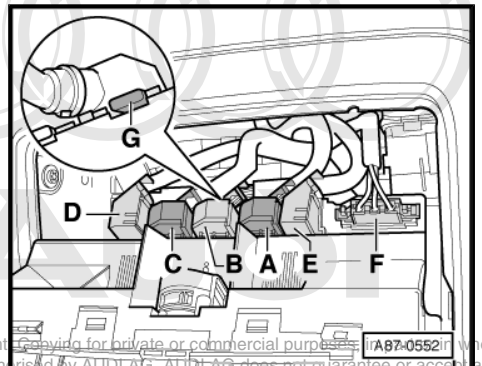

Protected by copyright. Copying for private or commercial purposes, in part or in whole, is not permitted unless authorised by AUDI AG. AUDI AG does not guarantee or accept any liability with respect to the correctness of information in this document. Copyright by AUDI AG.

– Screw out the bolts -arrows-.

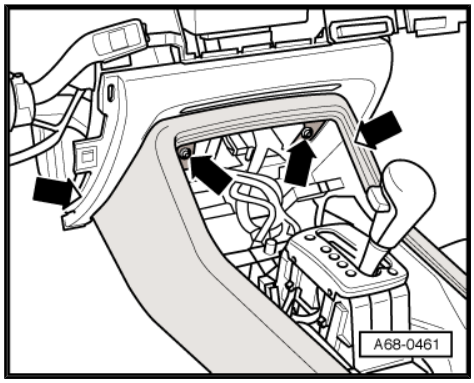

– Use a screwdriver, for example, to press on the rocker -A- of the selector lever emergency release mechanism.
– At the same time, move the selector lever from „P“ to „D“.

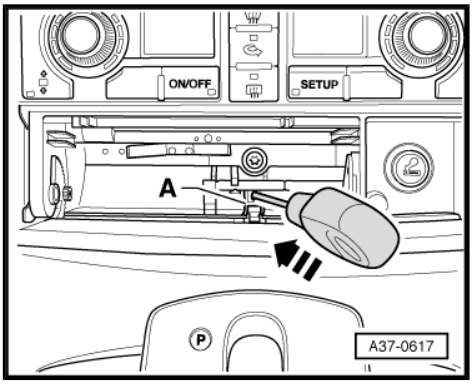

– Turn the collar -1- to the left and push it down as far as it will go.
– Lift off the knob -2- for the selector lever.

Protected by copyright. Copying for private or commercial purposes, in part or in whole, is not permitted unless authorised by AUDI AG. AUDI AG does not guarantee or accept any liability with respect to the correctness of information in this document. Copyright by AUDI AG.

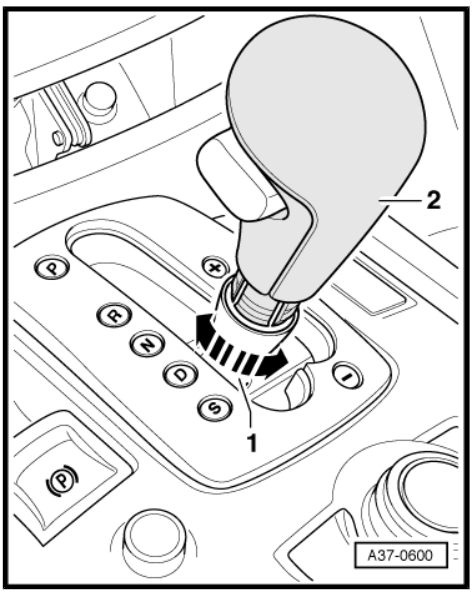

– Release the fasteners -1- on either side of the shift mechanism -arrow- and lift up the trim panel -3-.
– Unplug the connector -2- and detach the trim panel.
– Raise the centre console at the rear and unplug the connectors on the underside of the centre console.
– Detach the centre console to the rear.

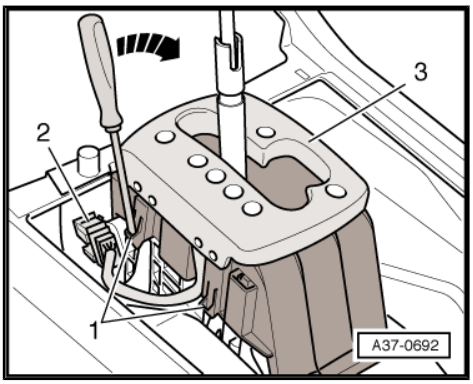

– Screw out the bolts -3- and -5- using the screwdriver T8 - T40056 A- .
– Screw out the TORX bolts -6- and the hexagon socket-head bolt -4-.
– Separate the upper trim -2- for the steering column switch from the lower trim -1- and detach both sections.

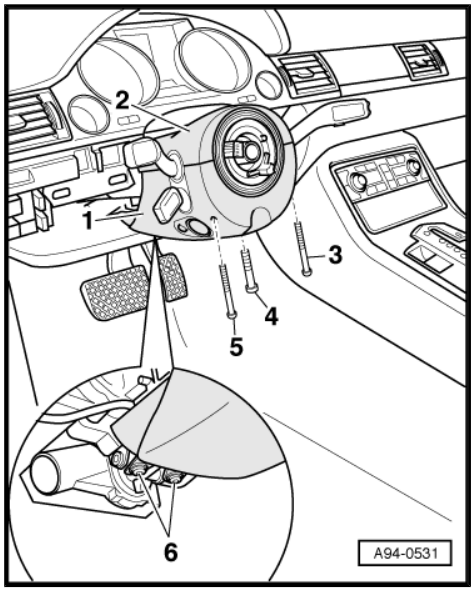

– Screw out the bolt -2-.
– Unplug the connectors -1-, -3- and -4-.
– Carefully pull off the steering column switch with the steering column electronics control unit.

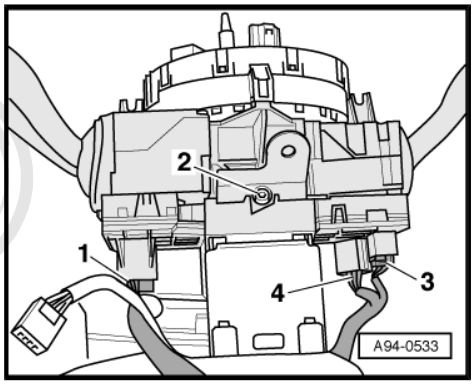

– Turn the knurled wheel -3- of the air vent on the left next to the dash panel insert fully upwards.
– Above the bottom slat -2- insert a jeweller's screwdriver -1- in each of the two air vent clips.
– Alternately pull the left and right side of the air vent out of the installation opening, leaving the jeweller's screwdrivers in position.

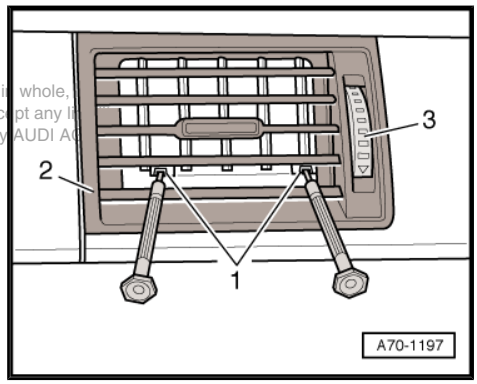

Reproduction - copyright © Copyright AUDI AG. Reproduction in part or in whole, permitted unless authorised by AUDI AG. AUDI AG does not guarantee or accept any liability with respect to the correctness of information in this document. Copyright by AUDI AG

Note

If necessary, use a hook -3438- to pull the air vent out of the opening.

– Unplug the connector at the air vent.
– Repeat the procedure at the air vent on the right next to the dash panel insert.

– Screw out the bolts -arrows-.
– Pull the trim slightly away from the dash panel insert.
– Unplug the connectors at the trim for the dash panel insert.

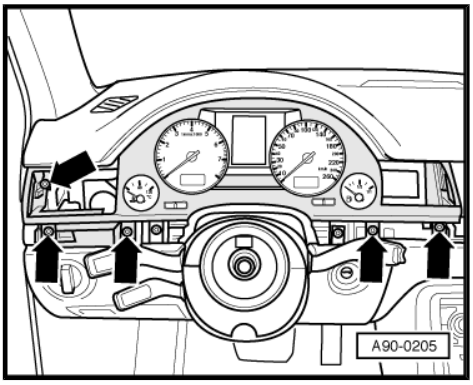

– Release the clips -arrows- on the left and right and pull the dash panel insert slightly away from the dash panel.

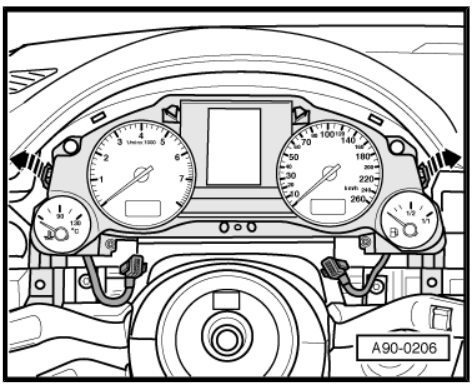

– Press the catch -1-, turn the clip in -arrow direction- and unplug the connector.
– Detach the dash panel insert.

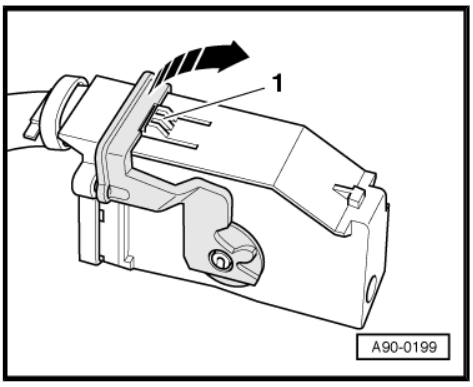

– Turn the knurled wheel -3- of the left air vent above the glove compartment fully up.
– Above the bottom slat -2-, insert a jeweller's screwdriver -1- in each of the two air vent clips.
– Alternately pull the left and right side of the air vent out of the installation opening, leaving the jeweller's screwdrivers in position.

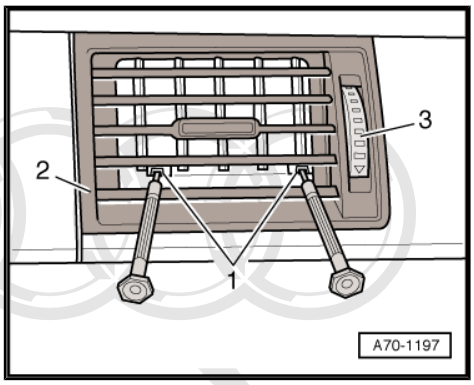

Note

If necessary, use a hook -3438- to pull the air vent out of the opening.

– Unplug the connector at the air vent.
– Repeat the procedure at the right air vent above the glove compartment.

Protected by copyright. Copying for private or commercial purposes, in part or in whole, is not permitted unless authorised by AUDI AG. AUDI AG does not guarantee or accept any liability with respect to the correctness of information in this document. Copyright by AUDI AG.

– Release the retainer tabs -1- of the coin tray.
– Pull the coin tray out of the dash panel -arrow-.
– Unplug the connector on the back of the coin tray.

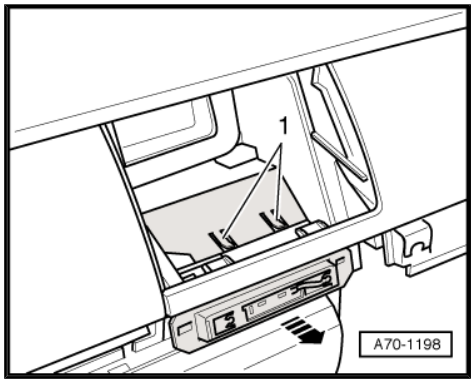

– Remove the heating duct in the driver side footwell.
– Unplug the connectors -1-.
– Unclip the connector -5- at the relay and fuse carrier.
– Screw out the bolts -3-.
– Disengage the retainer -4- of the relay and fuse carrier at the side guide -arrow-.
– Detach the relay and fuse carrier -2- and set it down in the footwell with the wires connected.

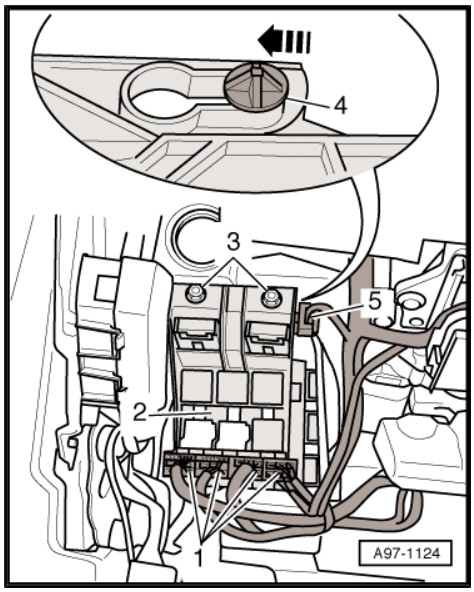

– Screw out the bolts -1- of the left fuse box -2-.
– Release the retainer tabs -arrows- and detach the fuse box from the central tube for the dash panel (leave the wires connected).

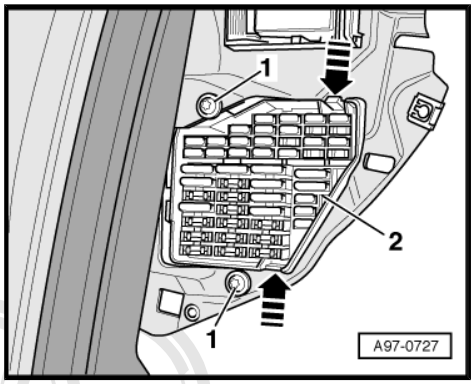

– Release the securing clip -arrow 1- at the left CAN connector.
– Press the retainer tab -arrow 2- and detach the CAN connector -T46a- inwards (leave the wires connected).

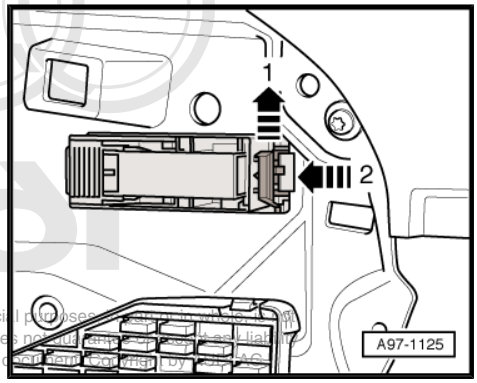

Protected by copyright. Copying for private or commercial purposes, in part or in whole, is not permitted unless authorised by AUDI AG. AUDI AG does not guarantee or assume any liability with respect to the correctness of information in this document. Copyright by AUDI AG.

– Secure the steering column -1- with a cable tie -2- to prevent the inadvertent separation of the top and bottom section of the steering column on removal.

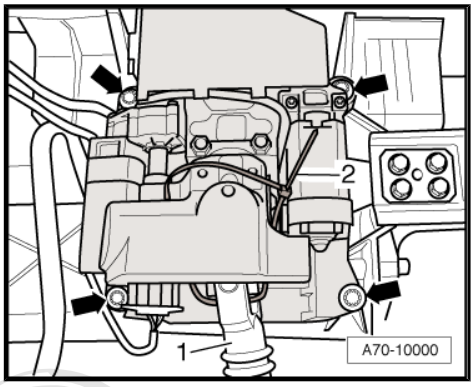

Note

A rattling noise may be encountered whilst driving if the splines are no longer in their original installation position.

– Screw out the bolts -arrows- and set down the steering column in the footwell.

Note

To unplug the connector at the headlight range control unit, press the catch -1-, turn the holder in -arrow direction- and unplug the connector.

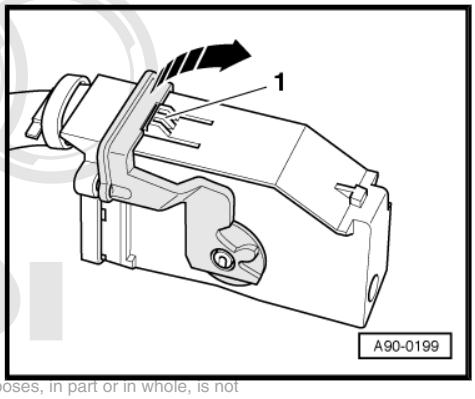

Protected by copyright. Copying for private or commercial purposes, in part or in whole, is not permitted unless authorised by AUDI AG. AUDI AG does not guarantee or accept any liability with respect to the correctness of information in this document. Copyright by AUDI AG.

– Unplug the connector at the headlight range control unit -2- and at the front parking aid warning buzzer -1-.

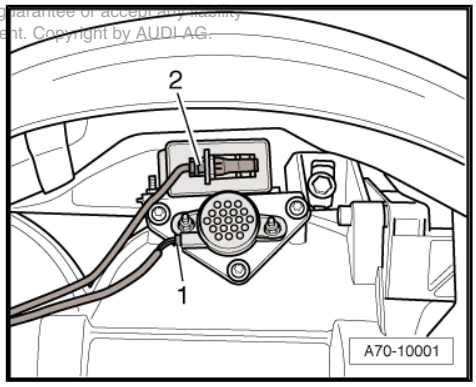

– Screw out the bolts -arrows-.
– Detach the control unit for front display and information control panel -J523- .
– Unplug the connector -1-.

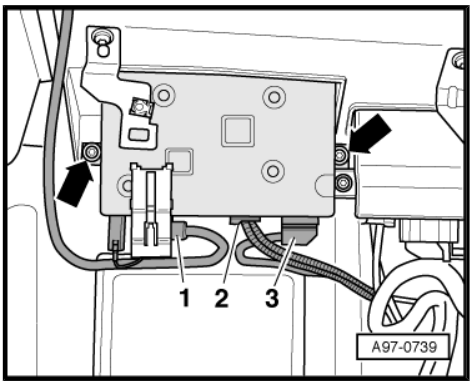

Note

Leave the connectors -Items 2- and -3- plugged in.

– Set down the control unit for front display and information control panel in the footwell.

– Screw out the bolts -arrows-.

– Detach the data bus diagnostic interface -J533- .

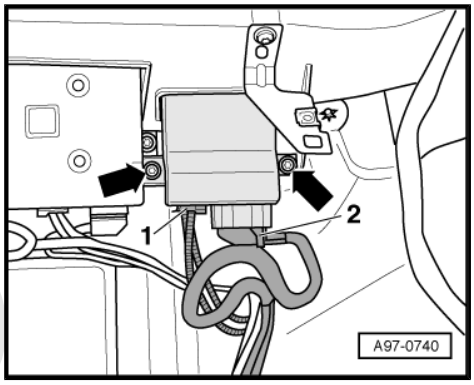

Note

Leave the connectors -Items 1- and -2- plugged in.

– Set down the data bus diagnostic interface in the footwell.

– Screw out the bolts -1- of the right fuse box -2-.

– Release the retainer tabs -arrows- and detach the fuse box from the central tube for the dash panel (leave the wires connected).

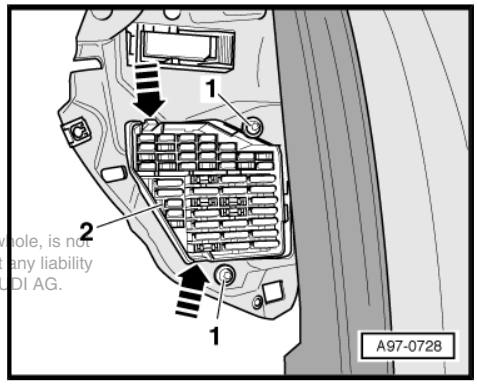

Protected by copyright. Copying for private or commercial purposes, in part or in whole, is not permitted unless authorised by AUDI AG. AUDI AG does not guarantee or accept any liability with respect to the correctness of information in this document. Copyright by AUDI AG.

– Release the securing clip -arrow 1- at the right CAN connector.

– Press the retainer tab -arrow 2- and detach the CAN connector -T46b- inwards (leave the wires connected).

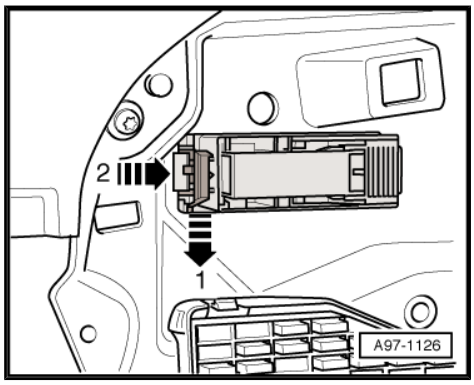

– Release and unplug the connector at the front passenger's airbag -2- and at the right centre vent control motor -V111- -Item 1-.

– Use the removal lever -80-200- to unclip the wiring harness from the dash panel -arrows-.

– Unclip the wiring harness at the central tube for the dash panel.

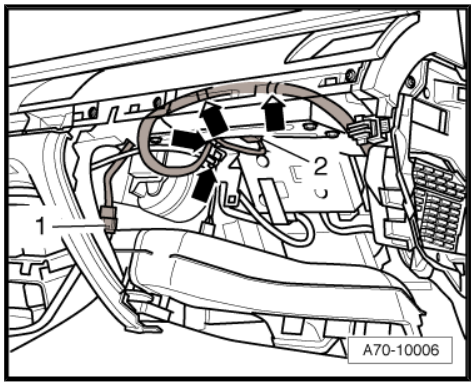

– Screw out the bolt -2- at the bottom of the dash panel.
– Screw out the bolts -1- and -4- and detach the support for the dash panel central tube with packing plates -3-.

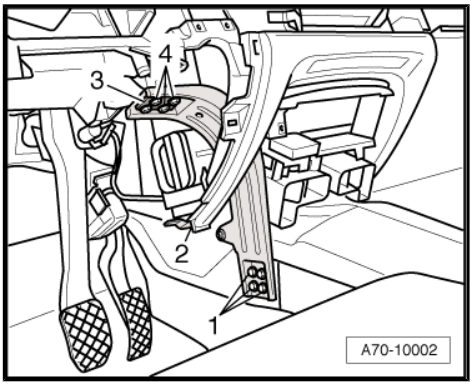

– Unplug the connector at the left centre vent control motor -V110- -Item 1- and at the open and close display motor -V301- -Item 2-.

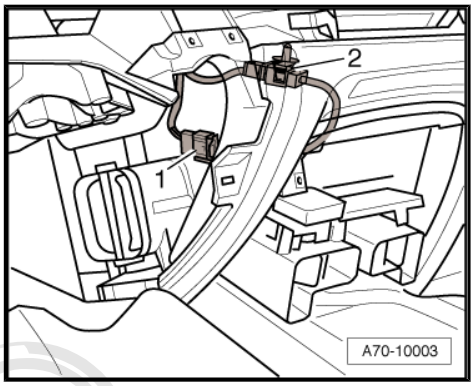

– Unscrew the nuts -1- and -2- on the left at the central tube and detach the packing plate -3-.
– Screw out the bolt -4-.

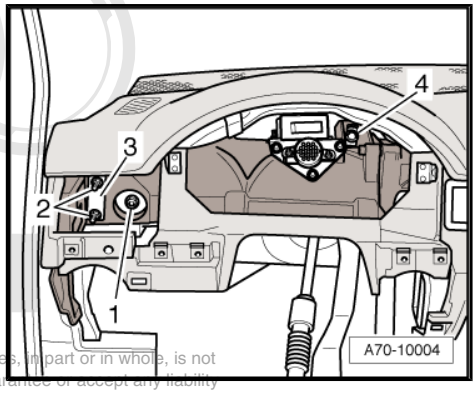

Protected by copyright. Copying for private or commercial purposes, in part or in whole, is not permitted unless authorised by AUDI AG. AUDI AG does not guarantee or accept any liability with respect to the correctness of information in this document. Copyright by AUDI AG.

– Unscrew the nuts -1- on the right at the central tube and detach the packing plate -2-.

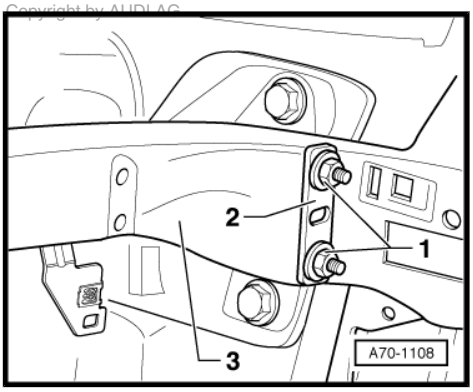

Note

A second mechanic is required to detach the central tube with dash panel.

– Take the central tube -3- with dash panel out of the passenger compartment and set it down on a soft surface.
– If necessary, separate the dash panel from the central tube ⇒ page 241 .

3.14.2 Installing

Note

If the vehicle is equipped with a Bang & Olufsen Audio System, noise may occur under certain circumstances on account of an inadequate distance between the extended treble loudspeakers and the windscreen. When fitting the dash panel, attention is therefore to be paid to an adequate clearance between the treble loudspeakers and the windscreen.

Protected by copyright. Copying for private or commercial purposes, in part or in whole, is not permitted unless authorised by AUDI AG. AUDI AG does not guarantee or accept any liability with respect to the correctness of information in this document. Copyright by AUDI AG.

Install in reverse order, paying attention to the following:

– Align the dash panel and tighten the bolt/nuts.

– Screw the steering column to the central tube ⇒ Rep. gr. 48 .

WARNING

There must not be anyone in the vehicle when connecting the battery.

– With the ignition switched on, connect the battery earth wire ⇒ Electrical system; Rep. gr. 27 .

3.14.3 Tightening torques

Component		Nm
Side of central tube to body		23
Central tube to	At top	8
Body	Bottom	12
Support to	Central tube	8
	Body	8
Fuse carrier to dash panel central tube		3
Relay and fuse carrier to central tube for dash panel		3
Control unit for front display and information control panel -J523- to body		4
Data bus diagnostic interface -J533- to body		4
Centre console to	Body	4
	Dash panel	4
Split armrest to support		18
Air vents to rear centre console		2.5
Driver side storage compartment	Central tube	4
to	Dash panel	4
Glove compartment to	Central tube	4
	Dash panel	4

4 Central tube

4.1 Exploded view of fitting locations

1 - Central tube
- ❑ Removal/installation involves removing and installing dash panel ⇒ page 224
- ❑ Separating dash panel from central tube ⇒ page 241

2 - Bolts (6x), 8 Nm

3 - Right mounting bracket

4 - Right plate

5 - Nuts (2x), 23 Nm

6 - Bolts (4x)
- ❑ Tightening torque ⇒ Item 4 (page 132)

7 - Securing elements (2x)
- ❑ Must be replaced after airbag triggering

8 - Right glove compartment support

9 - Bolts (2x)
- ❑ Tightening torque ⇒ Item 3 (page 4)

10 - Left glove compartment support

11 - Bolt, 8 Nm

12 - Bolt, 12 Nm

13 - Plate

14 - Tunnel support

15 - Bolts (4x), 8 Nm

16 - Bolts (4x), 8 Nm

17 - Plate

18 - Nuts (2x), 23 Nm

19 - Not fitted

20 - Left plate

21 - Left mounting bracket

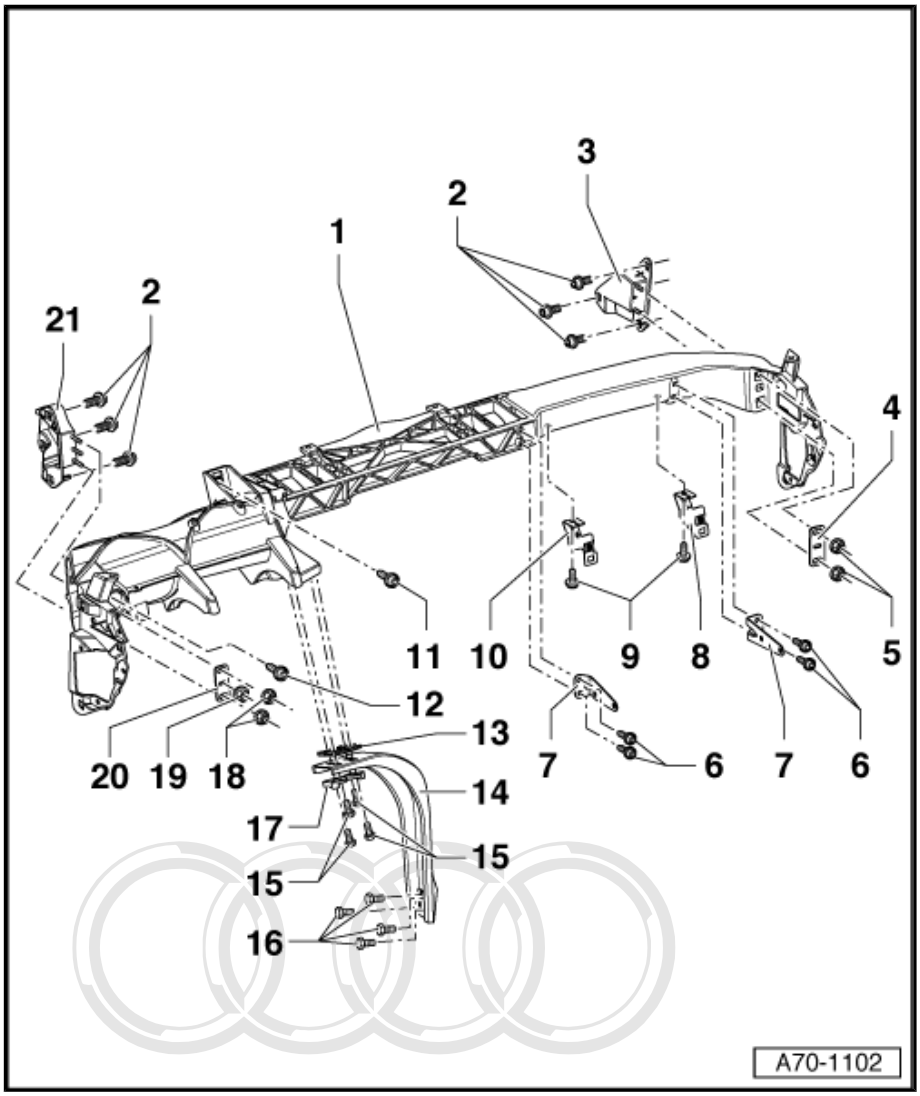

Protected by copyright. Copying for private or commercial purposes, in part or in whole, is not permitted unless authorised by AUDI AG. AUDI AG does not guarantee or accept any liability with respect to the correctness of information in this document. Copyright by AUDI AG.

4.2 Separating dash panel from central tube

Special tools and workshop equipment required

♦ Removal wedge -3409-

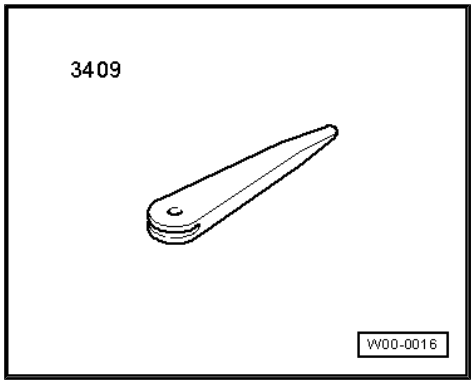

♦ Feeler gauge

4.2.1 Dismantling

Note

All cable ties unfastened or severed on removal are to be re-attached in the same position on installation.

– Remove the dash panel ⇒ page 224 .

– Set down the dash panel with central tube on a soft surface.

– Unclip the cap -1- with a 0.35 mm feeler gauge -2- from the centre defroster vent -arrow-.

– Prise out the sunlight penetration photosensor -G107- -Item 3- and unplug the connector.

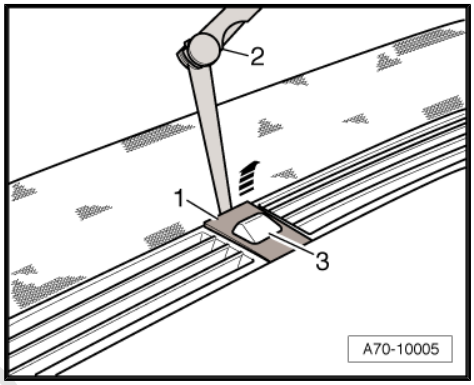

– Screw out the bolt -1-.

– Prise the centre defroster vent -2- as shown out of the dash panel using the removal wedge -3409- .

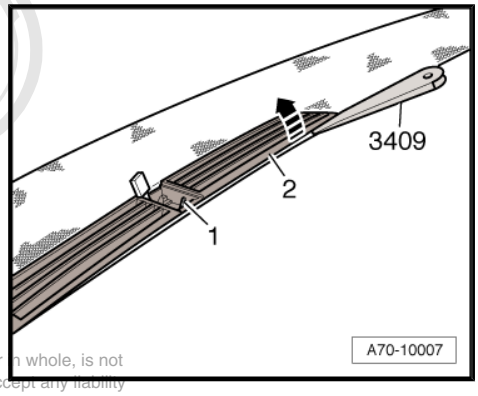

Protected by copyright. Copying for private or commercial purposes, in part or in whole, is not permitted unless authorised by AUDI AG. AUDI AG does not guarantee or accept any liability with respect to the correctness of information in this document. Copyright by AUDI AG.

– Use a screwdriver to press the retaining spring in -arrow direction- and take the cap -2- out of the heater duct.

– Screw out the bolts -1-.

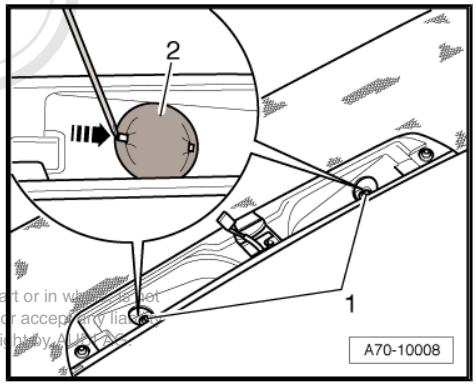

Protected by copyright. Copying for private or commercial purposes, in part or in whole, is not permitted unless authorised by AUDI AG. AUDI AG does not guarantee or accept any liability with respect to the correctness of information in this document. Copyright by AUDI AG.

– Screw out the bolts -arrows- on the right of the dash panel.

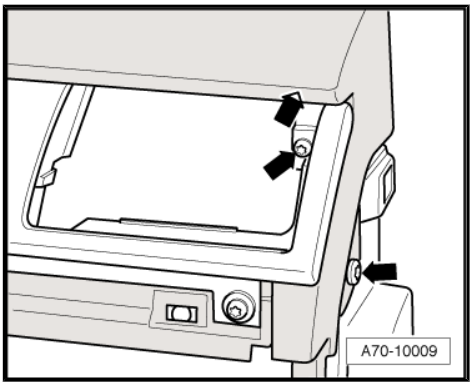

– Detach the felt from the dash panel at the outer corners in the area of the dash panel insert.

– Screw out the bolts -arrows- on the left of the dash panel.

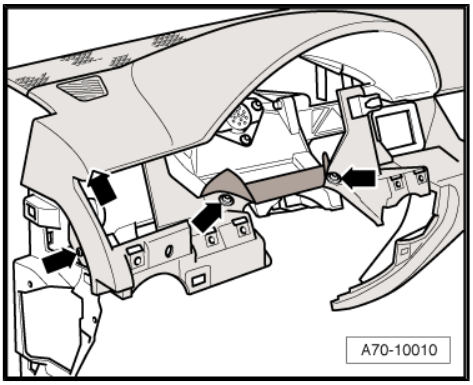

– Set down the dash panel with the upper side resting on a soft surface.

> ⚠ **WARNING**
>
> *Heed the safety regulations for pyrotechnic components* *⇒ page 94* *.*

– Unscrew the nuts -1- and -2-.

– Take the front passenger's airbag out of the dash panel.

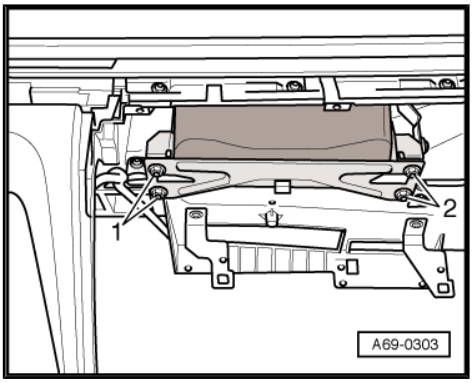

– Screw out the bolts -1- and -2- at the mount for the front passenger's airbag.

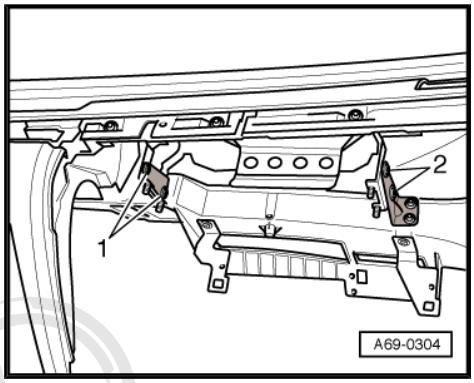

– Unfasten the cable tie on the driver side at the mount for the relay and fuse carrier.
– Take the wiring harness out of the mount at the central tube on the front passenger side.
– Take the central tube out of the dash panel.

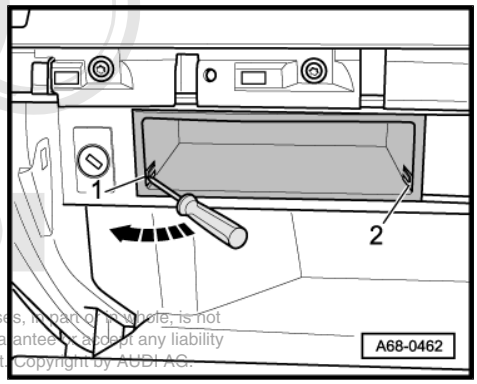

Protected by copyright. Copying for private or commercial purposes, in part or in whole, is not permitted unless authorised by AUDI AG. AUDI AG does not guarantee or accept any liability with respect to the correctness of information in this document. Copyright by AUDI AG.

4.2.2 Assembling

Assemble in reverse order, paying attention to the following:

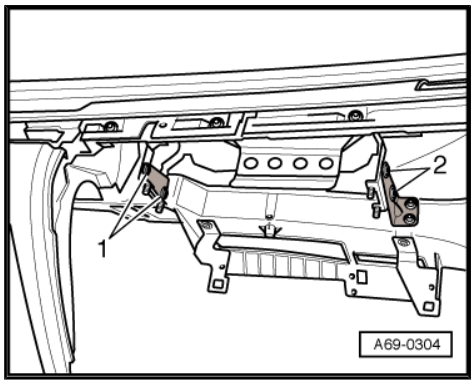

Note

- *Re-attach all cable ties in the same locations on installation.*
- *Replace self-locking nuts and bolts when performing assembly work.*

– Secure the bolts -1- and -2- with locking fluid.

4.2.3 Tightening torques

Component		Nm
Mount for front passenger's airbag to central tube mount		4 [1]
Front passenger's airbag to mount		4
Dash panel to	At top	2
Central tube	On side	4

1) Secure with locking fluid

5 Roof trim

Block diagram

- ⇒ „5.1 Removing moulded headliner“, page 245
- ⇒ „5.2 Removing and installing sun visor“, page 247
- ⇒ „5.3 Removing and installing sun visor mount“, page 247
- ⇒ „5.4 Removing and installing roof reinforcement“, page 248

5.1 Removing moulded headliner

Special tools and workshop equipment required

- Torque wrench -V.A.G 1410/-

Protected by copyright. Copying for private or commercial purposes, in part or in whole, is not permitted unless authorised by AUDI AG. AUDI AG does not guarantee or accept any liability with respect to the correctness of information in this document. Copyright by AUDI AG.

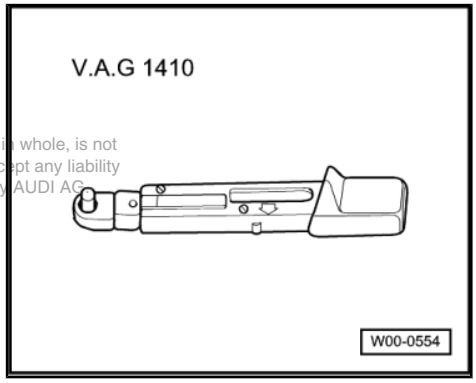

1 - Sun roof trim frame

2 - Moulded headliner

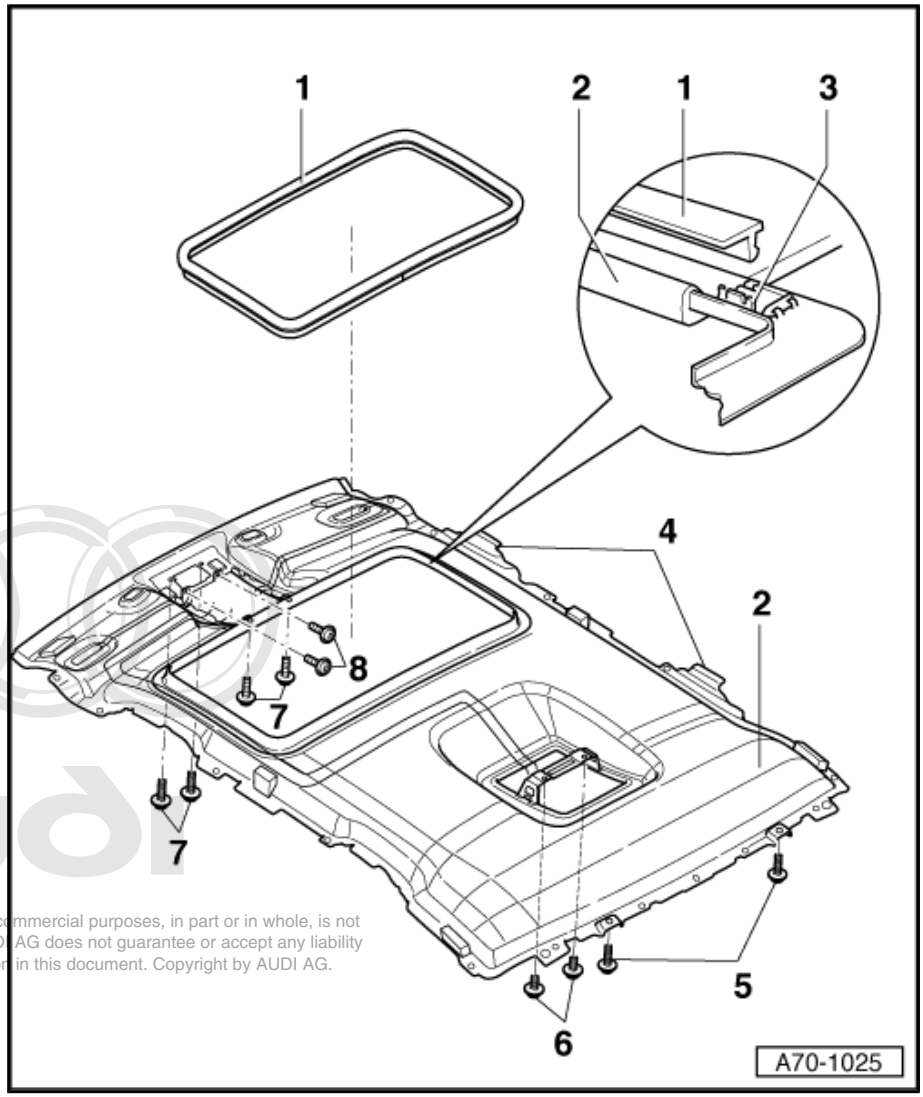

♦ Removing

- Remove the right and left sun visors ⇒ page 247 .
- Remove the right and left sun visor mounts ⇒ page 247 .
- Remove the lights for the right and left make-up mirrors ⇒ Electrical system; Rep. gr. 96 .
- Remove the right and left roof grab handles ⇒ page 251 .
- Remove the right and left coat hooks ⇒ page 260 .
- Remove the upper right and left A-pillar trim ⇒ page 250 .
- Remove the right and left D-pillar trim ⇒ page 258 .
- Remove the roof end moulding ⇒ page 262 .
- Unscrew the bolts -5- (2x).
- Remove the interior light/reading light at rear ⇒ Electrical system; Rep. gr. 96 .
- Unscrew the bolts -6- (2x).
- Sun roof: Prise the trim frame -1- out of the clips -3- all round.
- Remove the interior mirror ⇒ page 92 and ⇒ page 92 .
- Remove the interior light/reading light at front ⇒ Electrical system; Rep. gr. 96 .
- Unscrew the bolts -7- (4x).
- Unscrew the bolts -8- (2x).
- Move the gear lever/selector lever to the front position.
- Move the backrest of the front passenger's seat to the rearmost position.
- Move the backrest of the driver's seat to the rearmost position.
- Pull out the tabs -4- (4x) on the left and right.
- Removal of the cable at the moulded headliner involves getting out of the vehicle and in doing so carefully lowering the moulded headliner onto the seats.
- Unplug the ribbon cable connector at the front interior light module.
- Open the rear left door.
- Take out the moulded headliner through the front passenger's door.

♦ Installing

- Carefully slide in the moulded headliner through a rear door.

Note

Keep to the sequence when fitting, as otherwise the moulded headliner can no longer be centred.

- Clip in the holders for the sun visors.
- Clip in the trim frame for the sun roof -1-.
- Screw in the bolts -5- (2x).

Protected by copyright. Copying for private or commercial purposes, in part or in whole, is not permitted unless authorised by AUDI AG. AUDI AG does not guarantee or accept any liability with respect to the correctness of information in this document. Copyright by AUDI AG.

– Continue installing the moulded headliner -1- in the reverse order of removal.

3 - Clips

4 - Tabs (4x)

5 - Bolts (2x)

❑ Tightening torque 4 Nm.

6 - Bolts (2x)

❑ Tightening torque 4 Nm.

7 - Bolts (4x)

❑ Tightening torque 4 Nm.

8 - Bolts (2x)

5.2 Removing and installing sun visor

Special tools and workshop equipment required

♦ Torque wrench -V.A.G 1783-

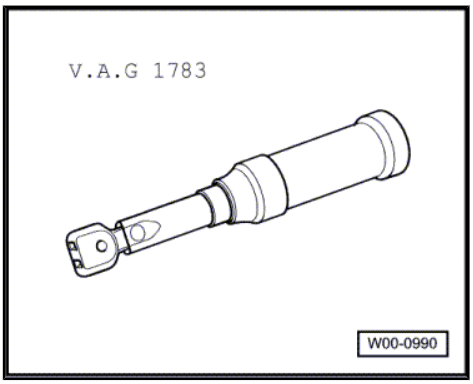

– Disengage the sun visor -1- from the mount -3- and fold the sun visor towards the windscreen.

– Use a screwdriver to carefully prise the cap -4- out of the sun visor base -5- at the recess.

– Screw out the bolts -2- (2x).

– Unplug the connector -6- and detach the sun visor.

♦ Tightening torque 3.5 Nm.

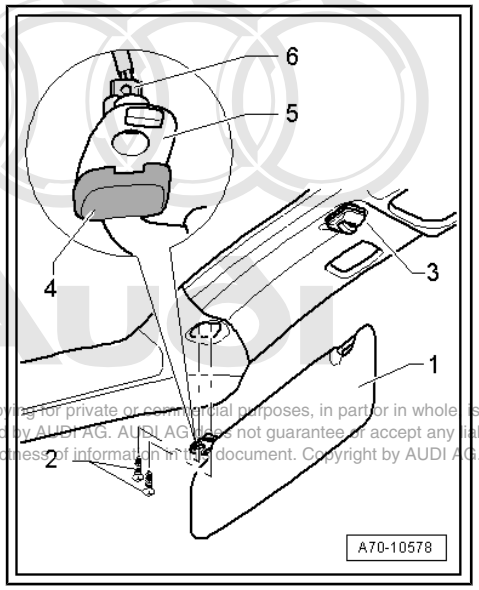

Protected by copyright. Copying for private or commercial purposes, in part or in whole, is not permitted unless authorised by AUDI AG. AUDI AG does not guarantee or accept any liability with respect to the correctness of information in this document. Copyright by AUDI AG.

5.3 Removing and installing sun visor mount

Special tools and workshop equipment required

♦ Torque wrench -V.A.G 1783-

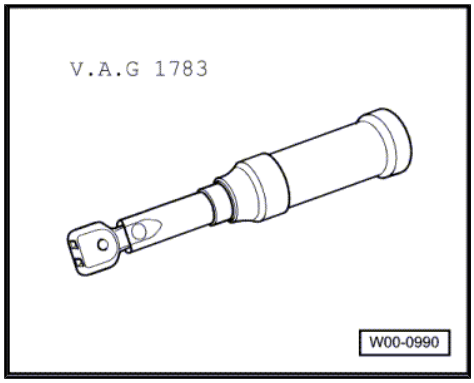

– Use a screwdriver to prise out the cap -3-.
– Unscrew the bolts -2- (2x).
♦ Tightening torque 4 Nm.
– Detach the mount -1-.

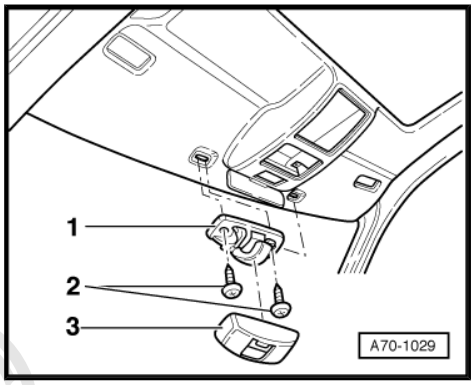

5.4 Removing and installing roof reinforcement

Note

♦ *Only fitted on vehicles with no sun roof.*
♦ *The brackets for attaching the moulded headliner at the front -3- and rear -4- are bonded to the roof reinforcement and cannot be replaced separately.*

Protected by copyright. Copying for private or commercial purposes, in part or in whole, is not permitted unless authorised by AUDI AG. AUDI AG does not guarantee or accept any liability with respect to the correctness of information in this document. Copyright by AUDI AG.

Removing

– Remove the moulded headliner ⇒ page 245 .
– Starting at the rear, carefully detach the roof reinforcement -1- from the roof.

Installing

– Apply new adhesive between the adhesive beads -2-.
– New roof: Apply adhesive at the recesses -2-.
– Use the adhesive with genuine part number: D 190 MKD A3.
– Wait at least 2 hours before fitting the moulded headliner.

5 - For series assembly only (can be ignored)

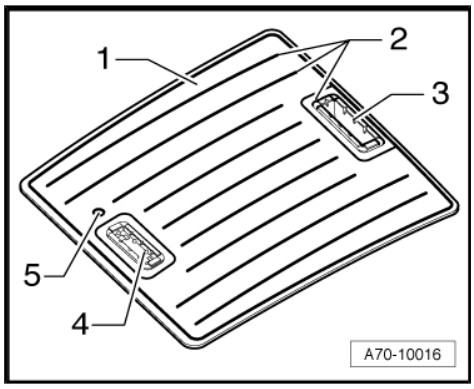

6 Trim panels

Block diagram

- ⇒ „6.1 Removing and installing upper A-pillar trim“, page 250
- ⇒ „6.2 Removing and installing roof grab handle“, page 251
- ⇒ „6.3 Removing and installing lower A-pillar trim“, page 253
- ⇒ „6.4 Removing and installing upper and lower A-pillar intermediate piece“, page 253
- ⇒ „6.5 Removing and installing foot rest“, page 253
- ⇒ „6.6 Removing and installing upper B-pillar trim“, page 254
- ⇒ „6.7 Removing and installing lower B-pillar trim“, page 256
- ⇒ „6.8 Removing and installing C-pillar trim“, page 256
- ⇒ „6.9 Removing and installing rear wheel housing trim“, page 258
- ⇒ „6.10 Removing and installing D-pillar trim“, page 258
- ⇒ „6.11 Removing and installing coat hook“, page 260
- ⇒ „6.12 Removing and installing narrow D-pillar trim“, page 260
- ⇒ „6.13 Removing and installing roof end trim “, page 262
- ⇒ „6.14 Removing and installing rear shelf“, page 262
- ⇒ „6.15 Removing and installing electric rear window sun blind“, page 264
- ⇒ „6.16 Removing and installing rear shelf replacement parts“, page 266
- ⇒ „6.17 Removing and installing floor covering“, page 267
- ⇒ „6.18 Removing and installing box for tool kit and hazard warning triangle“, page 268
- ⇒ „6.19 Removing and installing rear lid trim“, page 269
- ⇒ „6.20 Removing and installing emergency release handle“, page 270
- ⇒ „6.21 Removing and installing grip moulding“, page 271
- ⇒ „6.22 Removing and installing button to close rear lid in luggage compartment E406 “, page 271
- ⇒ „6.23 Removing and installing rear cross panel trim“, page 272
- ⇒ „6.24 Removing and installing luggage compartment side trim“, page 273
- ⇒ „6.25 Removing and installing luggage compartment socket“, page 274
- ⇒ „6.26 Removing and installing ventilation grille“, page 274
- ⇒ „6.27 Separating luggage compartment side trim and drip rail trim/assembling“, page 275
- ⇒ „6.28 Removing and installing back panel trim“, page 275

Protected by copyright. Copying for private or commercial purposes, in part or in whole, is not permitted unless authorised by AUDI AG. AUDI AG does not guarantee or accept any liability with respect to the correctness of information in this document. Copyright by AUDI AG.

- ⇒ „6.29 Removing and installing luggage compartment floor covering“, page 277
- ⇒ „6.30 Removing and installing rear shelf lower trim“, page 278
- ⇒ „6.31 Removing and installing fastening rings“, page 278

6.1 Removing and installing upper A-pillar trim

Special tools and workshop equipment required

- Torque wrench -V.A.G 1783-

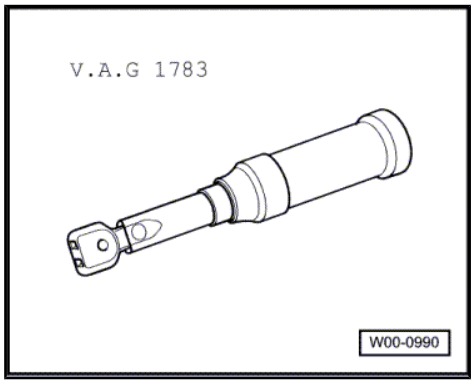

WARNING

Heed the safety regulations for pyrotechnic components ⇒ page 94 .

Protected by copyright. Copying for private or commercial purposes, in part or in whole, is not permitted unless authorised by AUDI AG. AUDI AG does not guarantee or accept any liability with respect to the correctness of information in this document. Copyright by AUDI AG.

1 - Upper A-pillar trim

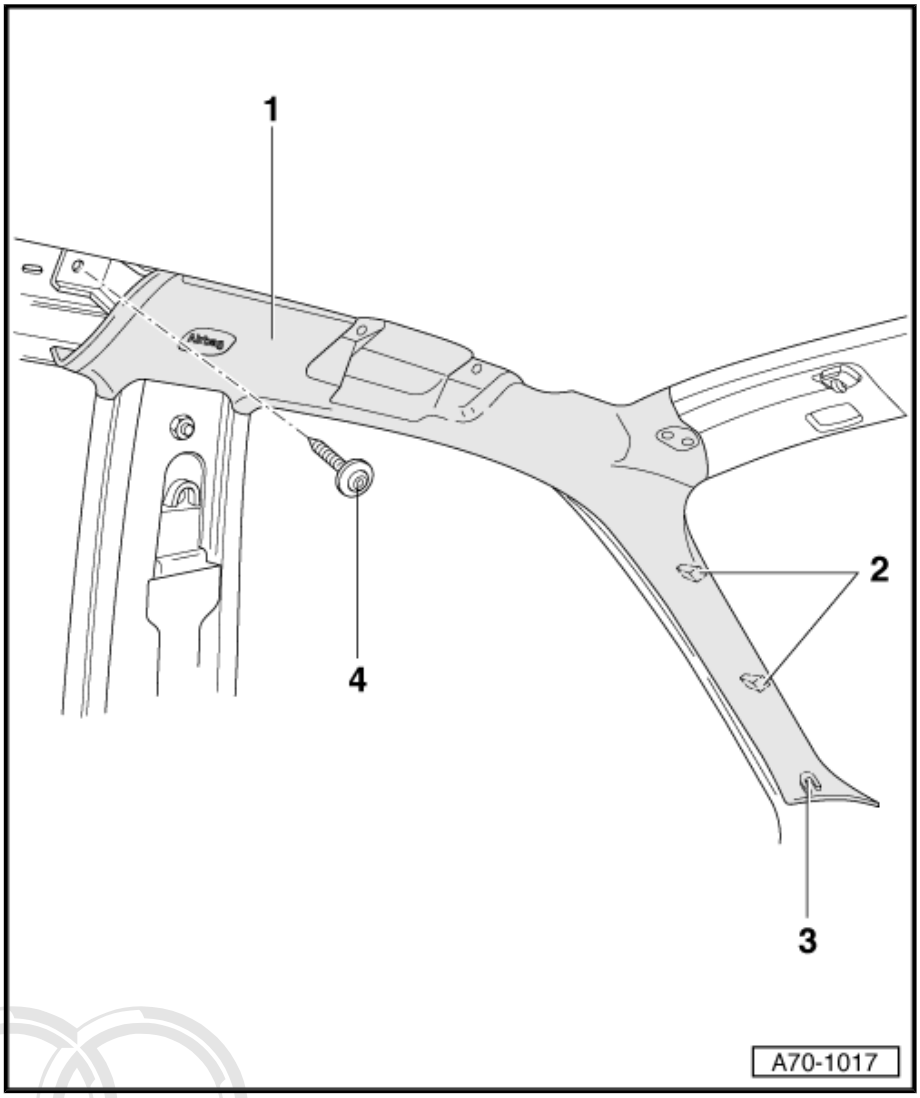

- Removing
  - Remove the sun visor ⇒ page 247 .
  - Remove the roof grab handle ⇒ page 251 .
  - Loosen the D-pillar trim and fold it aside.
  - Unscrew the bolt -4-.
  - Unfasten the upper A-pillar trim -1- from the clips -2- (2x).
  - Pull the upper A-pillar trim -1- to the rear out of the retainer -3-.
- Installing

> ⚠ **WARNING**
> *Always keep to the A-pillar trim installation sequence.*

  - Guide in the upper A-pillar trim -1- at the front between the rubber door seal and side panel.
  - Guide the trim retainer -3- into the corresponding clip.
  - Secure the upper A-pillar trim -1- with the two clips -2- (2x).
  - Screw in the bolt -4-.

> ⚠ **WARNING**
> *Make sure the trim is a firm fit.*

  - Make sure the rubber door seal is properly fitted over the upper A-pillar trim.

2 - Clips (2x)

3 - Retainer

Protected by copyright. Copying for private or commercial purposes, in part or in whole, is not permitted unless authorised by AUDI AG. AUDI AG does not guarantee or accept any liability with respect to the correctness of information in this document. Copyright by AUDI AG.

4 - Bolt

- ❑ Tightening torque 4 Nm
- ❑ Self-locking
- ❑ Replace
- ❑ The tapped holes for the bolts are always to be cleaned (e.g. with a thread cutter)

6.2 Removing and installing roof grab handle

Special tools and workshop equipment required

- Torque wrench -V.A.G 1783-

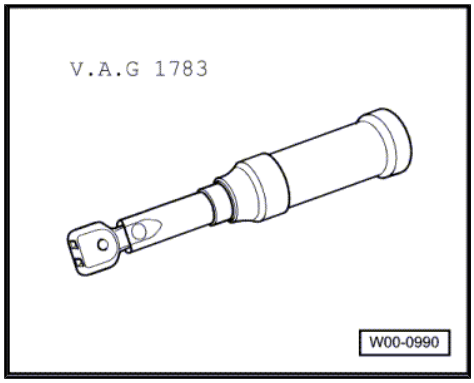

- Removing
- Use a screwdriver to prise out the cover panels -3- (2x) from underneath.
- Unscrew the bolts -2- (2x).
- Tightening torque 4 Nm.
- Detach the roof grab handle -1-.
- Installing

Protected by copyright. Copying for private or commercial purposes, in part or in whole, is not permitted unless authorised by AUDI AG. AUDI AG does not guarantee or accept any liability with respect to the correctness of information in this document. Copyright by AUDI AG.

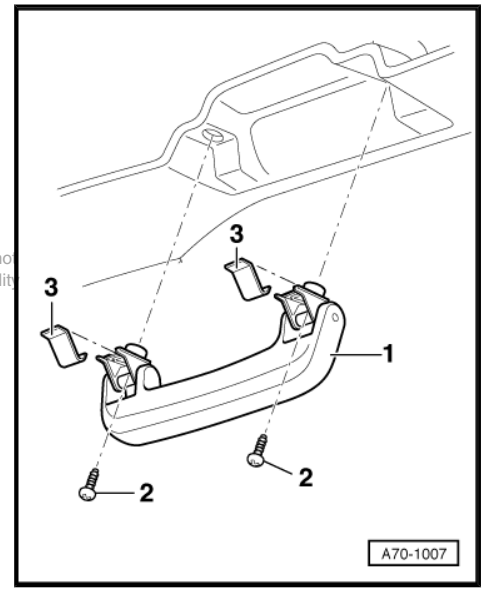

Note

- *Remants of locking fluid are always to be removed from the tapped holes for the roof grab handle after removing the roof grab handle. Otherwise there would be a danger of the new bolts seizing when screwed in and shearing off on renewed disassembly.*
- *Cleaning can be performed using a thread cutter.*
- *Replace the roof grab handle bolts (self-locking).*

6.3 Removing and installing lower A-pillar trim

1 - Lower A-pillar trim

- ♦ Removing
  - – Unfasten the lower A-pillar trim -1- from the two clips -3- (2x).
  - – Pull out the lower A-pillar trim -1- to the rear.
- ♦ Installing
  - – Slide the lower A-pillar trim -1- at the front into the foot rest.
  - – Engage the lower A-pillar trim -1- in the holder -2-.
  - – Secure the lower A-pillar trim -1- at the two clips -3- (2x).
  - – Make sure the rubber door seal is properly fitted over the lower A-pillar trim.

2 - Holder

3 - Clips (2x)

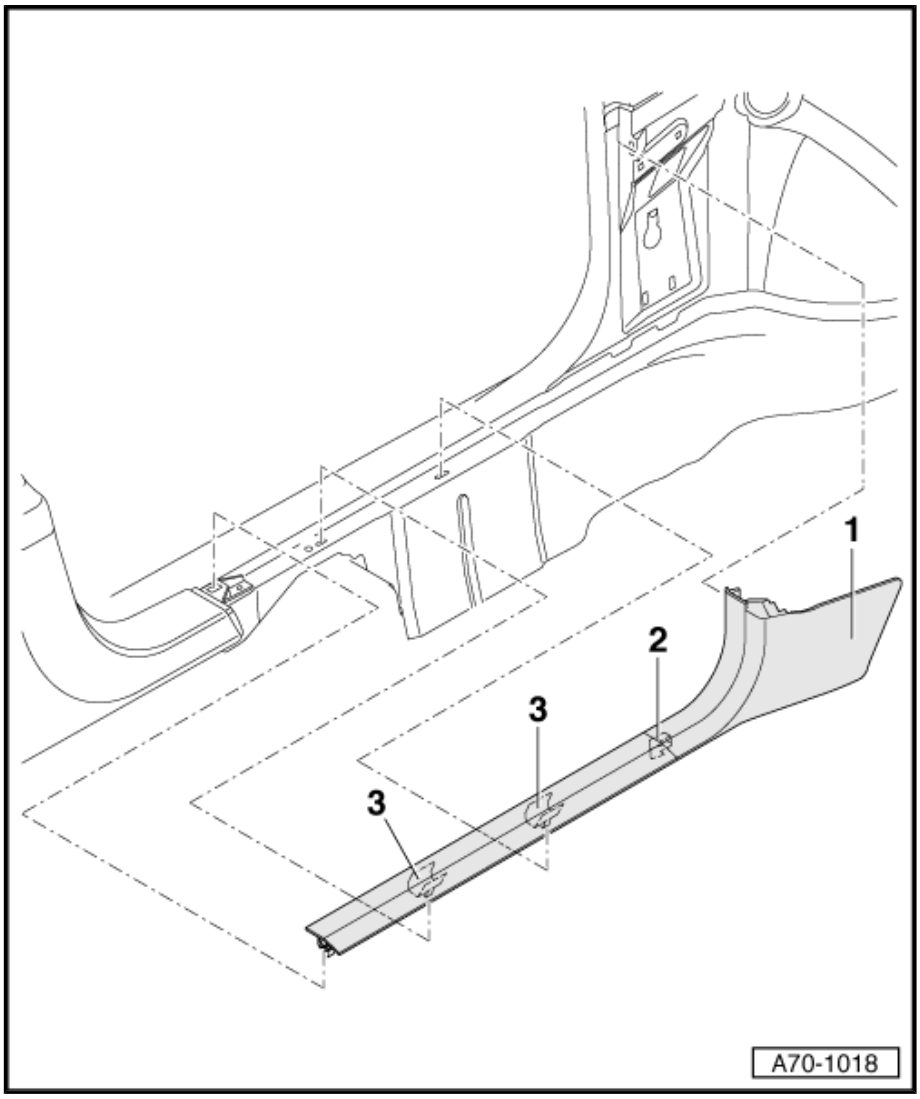

6.4 Removing and installing upper and lower A-pillar intermediate piece

- ♦ Removing
- – Remove the lower A-pillar trim ⇒ page 253 .
- – Remove the upper A-pillar trim ⇒ page 250 .
- – Remove the dash panel trim ⇒ page 223 .
- – Detach the intermediate piece -1-.
- ♦ Installing
- – Install the intermediate piece -1- in the reverse order of removal.

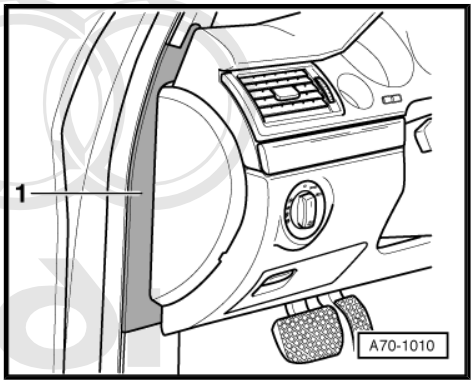

6.5 Removing and installing foot rest

Protected by copyright. Copying for private or commercial purposes, in part or in whole, is not permitted unless authorised by AUDI AG. AUDI AG does not guarantee or accept any liability with respect to the correctness of information in this document. Copyright by AUDI AG.

Special tools and workshop equipment required

- Torque wrench -V.A.G 1783-

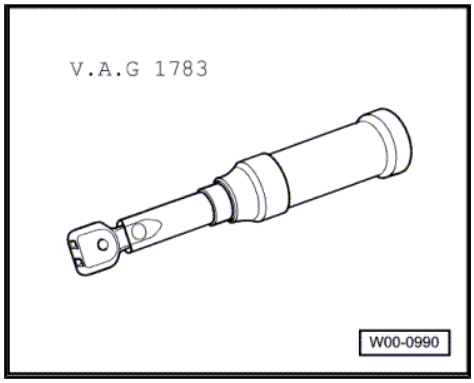

- Removing
- Remove the lower A-pillar trim ⇒ page 253 .
- Unscrew the bolt -1-.
- Tightening torque 4 Nm.
- Unfasten the foot rest -3- from the clips -2- (2x).
- Installing
- Install the foot rest -1- in the reverse order of removal.

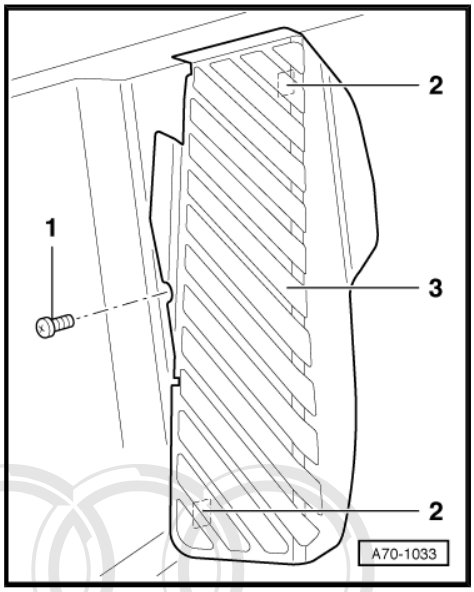

6.6 Removing and installing upper B-pillar trim

WARNING

Heed the safety regulations for pyrotechnic components *⇒ page 94* *.*

Protected by copyright. Copying for private or commercial purposes, in part or in whole, is not permitted unless authorised by AUDI AG. AUDI AG does not guarantee or accept any liability with respect to the correctness of information in this document. Copyright by AUDI AG.

1 - Holder (2x)

2 - Upper B-pillar trim

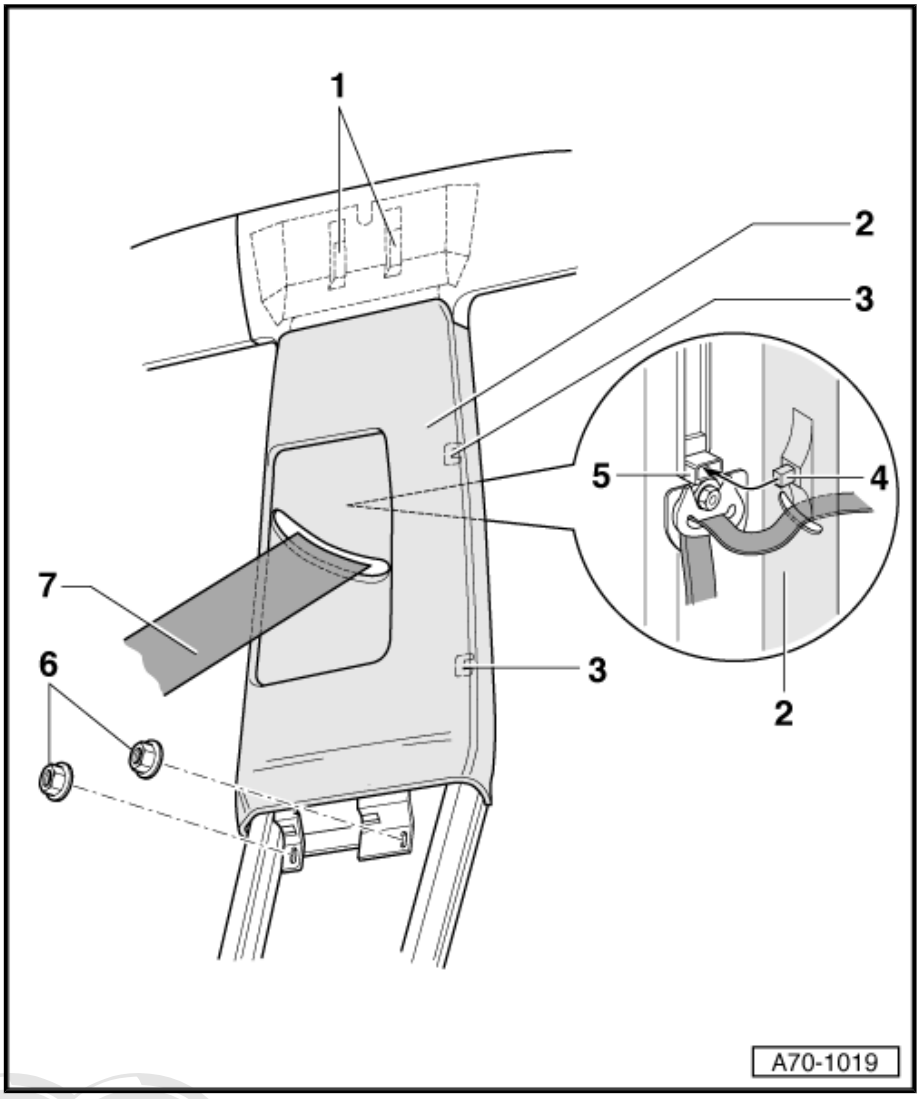

♦ Removing

– Unclip the lower B-pillar trim in the area of the upper B-pillar trim.
– Unscrew the nuts -6- (2x).
– Pull out the upper B-pillar trim -2- downwards.
– Complete removal: Remove the outer anchorage point ⇒ page 107 and guide out the webbing -7-.

♦ Installing

> ⚠ WARNING
> *Always keep to the upper B-pillar trim installation sequence.*

– Complete removal: Fit the outer floor group anchorage point ⇒ page 107 and guide in the webbing -7-.

– Engage the upper B-pillar trim -2- at the holders -1- (2x).

– Make sure the retainer -4- engages in the mount -5- at the belt height adjuster.

– Press on the upper B-pillar trim -2-.

– Screw in the nuts -6- (2x).

> ⚠ WARNING
> *Make sure the trim is a firm fit.*

– Make sure the rubber door seal is properly fitted over the upper B-pillar trim.

– Check operation of the belt height adjuster.

Protected by copyright. Copying for private or commercial purposes, in part or in whole, is not permitted unless authorised by AUDI AG. AUDI AG does not guarantee or accept any liability with respect to the correctness of information in this document. Copyright by AUDI AG.

3 - Clips (2x)

4 - Retainer at upper B-pillar trim

5 - Mount at belt height adjuster

6 - Nuts (2x)

7 - Webbing

6.7 Removing and installing lower B-pillar trim

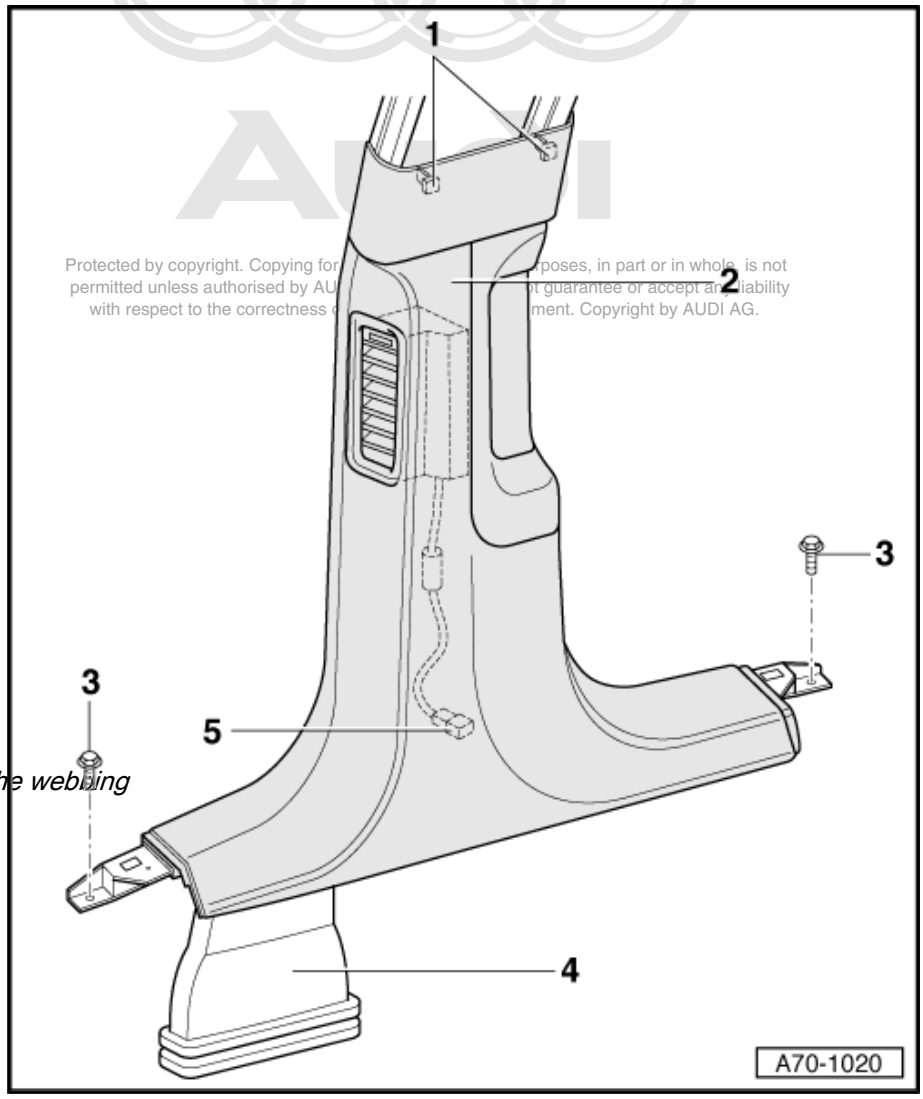

Protected by copyright. Copying for poses, in part or in whole, is not permitted unless authorised by AU t guarantee or accept an liability with respect to the correctness ment. Copyright by AUDI AG.

1 - Clips (2x)

2 - Lower B-pillar trim

♦ Removing

- Unclip the lower A-pillar trim in the area of the B-pillar.
- Unclip the wheel housing trim in the area of the B-pillar.
- Unscrew the bolts -3- (2x).
- Unfasten the lower B-pillar trim -2- at the clips -1- (2x) and pull the trim forwards.
- Pull the lower B-pillar trim -2- upwards and in doing so detach the air duct -4-.
- Unplug the connector for the ventilation system light -5-.

♦ Installing

Note

Take care not to trap the webbing when fitting the trim.

- Plug in the connector for the ventilation system light -5-.
- Guide the air duct -4- into the recess at the sill panel shell.
- Press on the lower B-pillar trim -2-.
- Screw in the bolts -3- (2x).
- Clip in the lower A-pillar trim and wheel housing trim.

WARNING

Make sure the trim is a firm fit.

- Make sure the rubber door seal is properly fitted over the B-pillar trim -2-.

3 - Bolts (2x)

4 - Air duct

5 - Connector for ventilation system light

6.8 Removing and installing C-pillar trim

Special tools and workshop equipment required

♦ Torque wrench -V.A.G 1783-

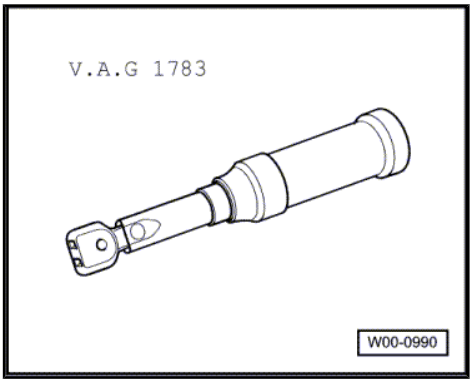

WARNING

Heed the safety regulations for pyrotechnic components *⇒ page 94* *.*

1 - Nuts (2x)

❑ Tightening torque 4 Nm

2 - C-pillar trim

♦ Removing

– Remove the D-pillar trim ⇒ page 258 .
– Unscrew the nuts -1- (2x).
– Remove the narrow D-pillar trim ⇒ page 260 .
– Detach the C-pillar trim -2- inwards.

♦ Installing

– Install the C-pillar trim -2- in the reverse order of removal.

WARNING

Make sure the trim is a firm fit.

– Make sure the rubber door seal is properly fitted over the C-pillar trim.

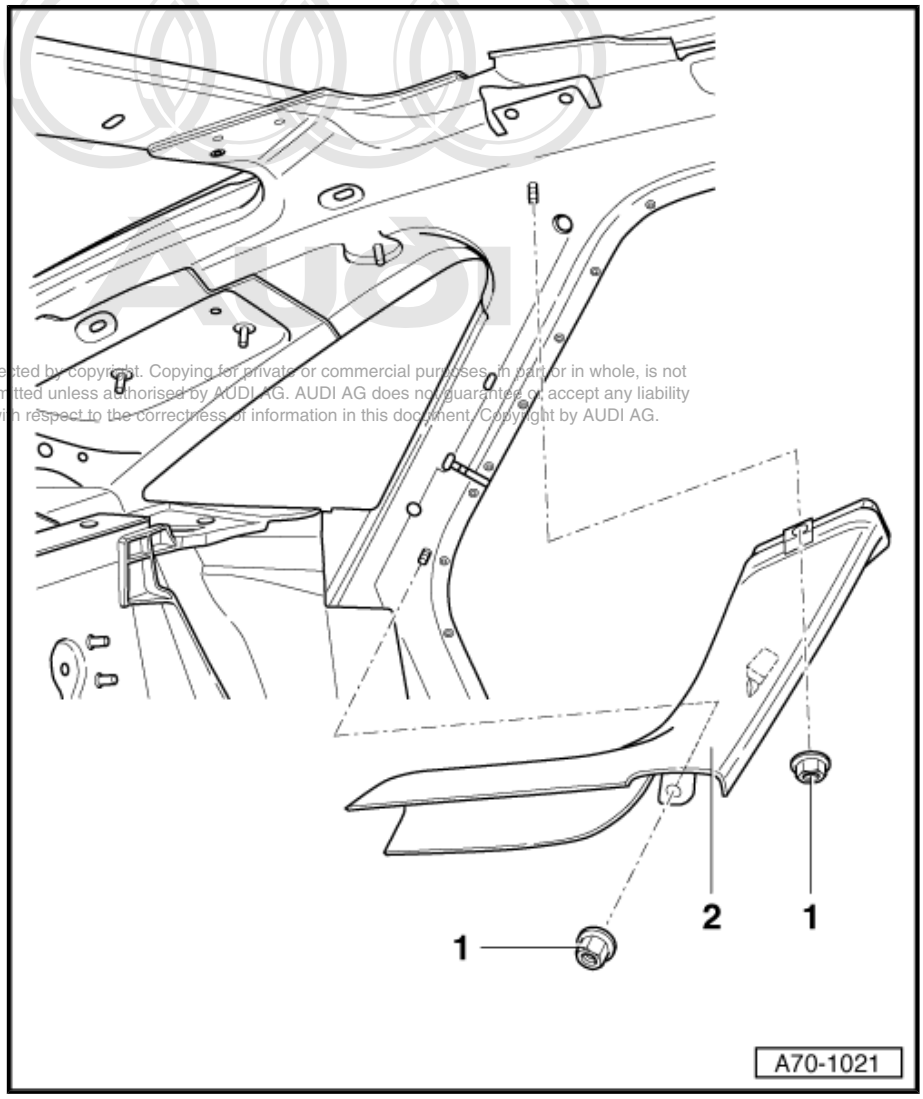

Protected by copyright. Copying for private or commercial purposes, in part or in whole, is not permitted unless authorised by AUDI AG. AUDI AG does not guarantee or accept any liability with respect to the correctness of information in this document. Copyright by AUDI AG.

6.9 Removing and installing rear wheel housing trim

1 - Mount

2 - Wheel housing trim

- Removing
  - Unfasten the wheel housing trim -2- at the clips -4- and -5-.
  - Disengage the wheel housing trim -2- from the mount -1- and pull out the wheel housing trim -2-.
- Installing
  - Install the wheel housing trim in the reverse order of removal.

> **WARNING**
> *Make sure the trim is a firm fit.*

  - Make sure the rubber door seal is properly fitted over the wheel housing trim.

3 - Mount

4 - Clip

5 - Clip

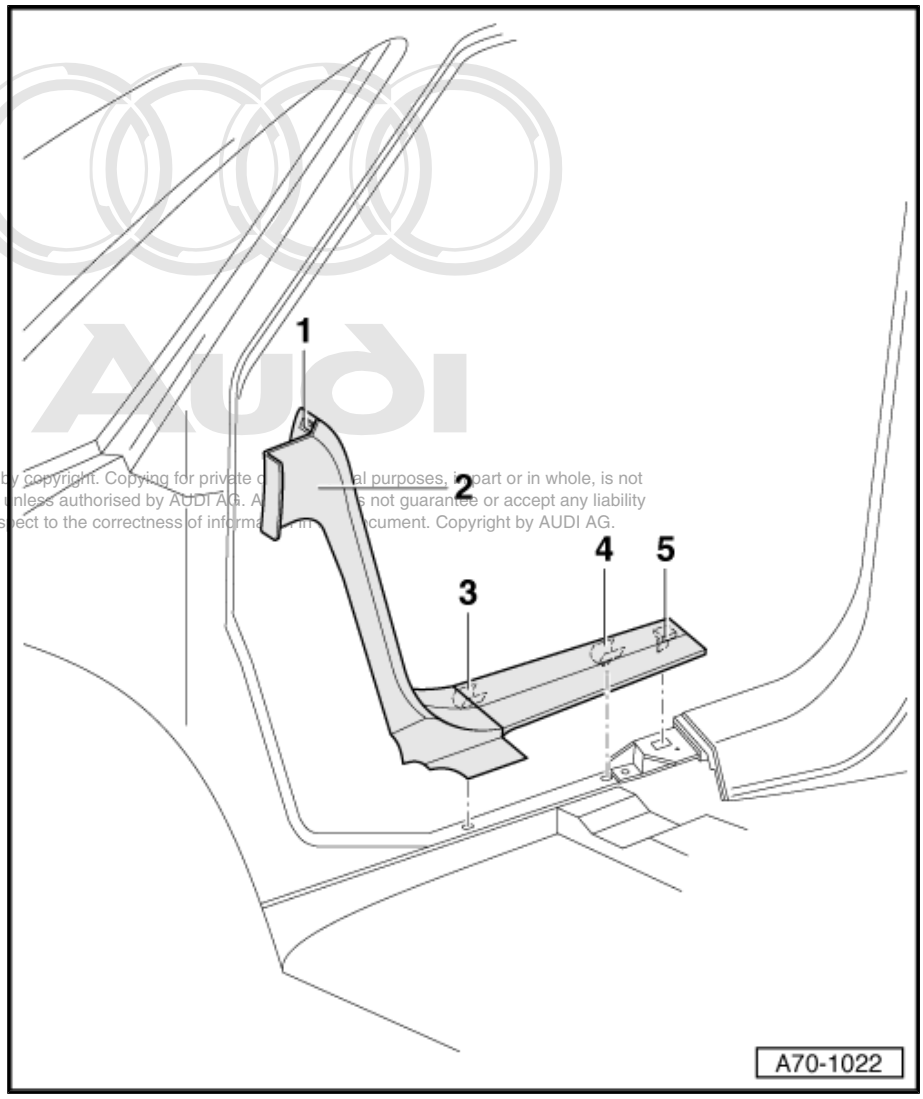

Protected by copyright. Copying for private or commercial purposes, in part or in whole, is not permitted unless authorised by AUDI AG. AUDI AG does not guarantee or accept any liability with respect to the correctness of information in this document. Copyright by AUDI AG.

6.10 Removing and installing D-pillar trim

Special tools and workshop equipment required

- Torque wrench -V.A.G 1783-

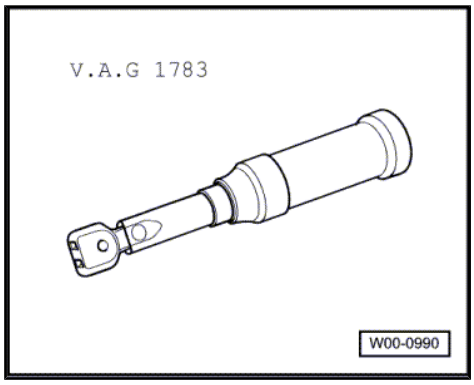

> ⚠ **WARNING**
>
> *Heed the safety regulations for pyrotechnic components* *⇒ page 94* *.*

1 - Clips (2x)

2 - Bolt

- ❑ Tightening torque 4 Nm
- ❑ Self-locking
- ❑ Replace
- ❑ The tapped holes for the bolts must always be cleaned (e.g. with a thread cutter).

3 - Upper D-pillar trim

♦ Removing

- – Remove the roof grab handle ⇒ page 251 .
- – Remove the coat hook ⇒ page 260 .
- – Unscrew the bolt -4-.
- – Unclip the upper A-pillar trim in the area of the D-pillar trim.
- – Unscrew the bolt -2-.
- – Unfasten the upper D-pillar trim -3- at the clips -1- (2x).
- – Pull out the upper D-pillar trim -3- inwards.

♦ Installing

- – Install the D-pillar trim -3- in the reverse order of removal.

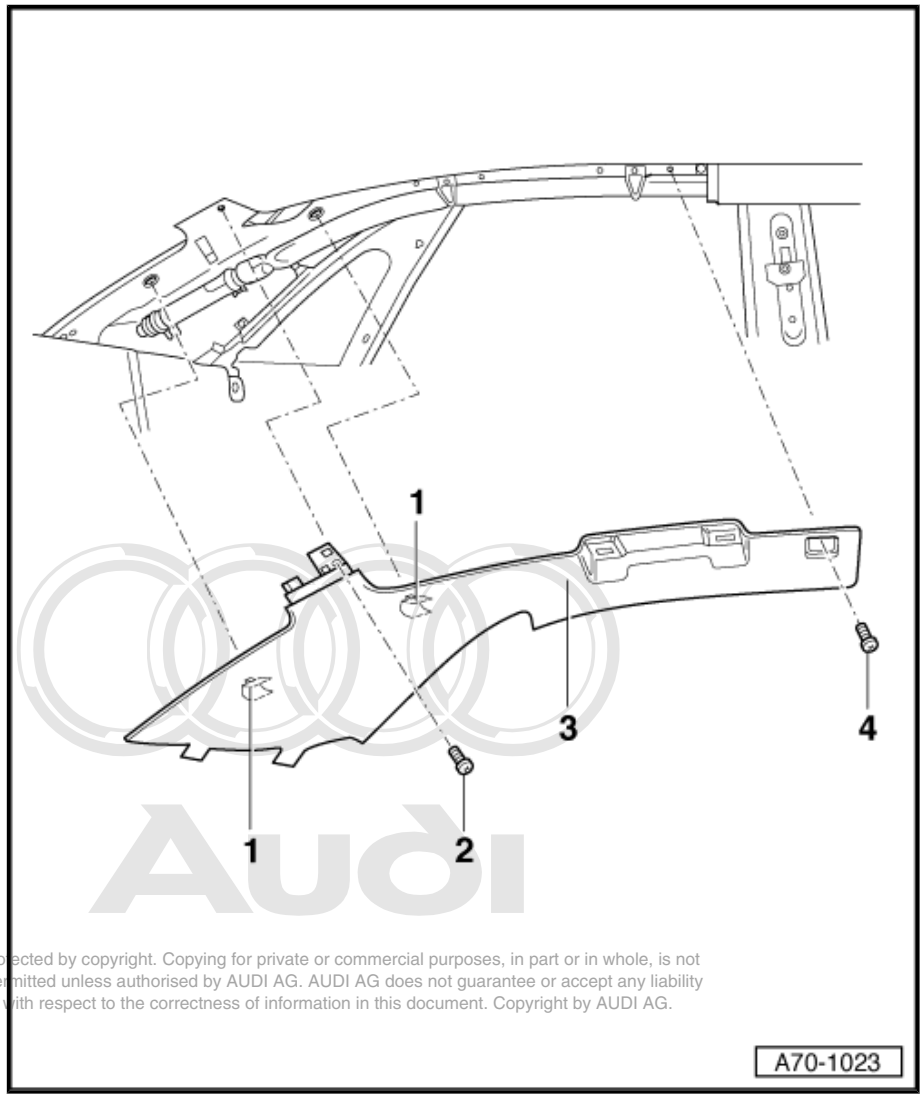

Protected by copyright. Copying for private or commercial purposes, in part or in whole, is not permitted unless authorised by AUDI AG. AUDI AG does not guarantee or accept any liability with respect to the correctness of information in this document. Copyright by AUDI AG.

> ⚠ **WARNING**
>
> *Make sure the trim is a firm fit.*

- – Make sure the rubber door seal is properly fitted over the D-pillar trim.

4 - Bolt

- ❑ Tightening torque 4 Nm
- ❑ Self-locking
- ❑ Replace
- ❑ The tapped holes for the bolts must always be cleaned (e.g. with a thread cutter).

6.11 Removing and installing coat hook

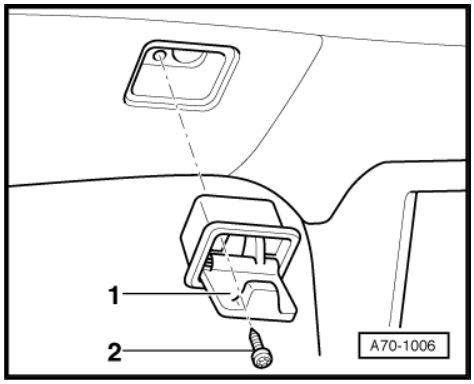

- ♦ Removing
- – Fold down the coat hook -1-.
- – Unscrew the bolt -2-.
- – Take out the coat hook -1-.
- ♦ Installing
- – Install the coat hook -1- in the reverse order of removal.

6.12 Removing and installing narrow D-pillar trim

Special tools and workshop equipment required

- ♦ Torque wrench -V.A.G 1783-

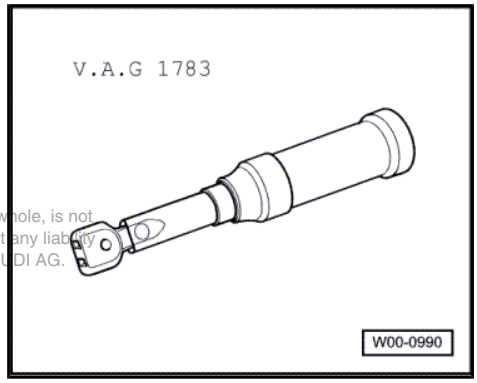

Protected by copyright. Copying for private or commercial purposes, in part or in whole, is not permitted unless authorised by AUDI AG. AUDI AG does not guarantee or accept any liability with respect to the correctness of information in this document. Copyright by AUDI AG.

> ⚠ **WARNING**
>
> *Heed the safety regulations for pyrotechnic components* *⇒ page 94* *.*

1 - Narrow D-pillar trim

- ♦ Removing
  - – Unscrew the nuts -2- (3x).
  - – Detach the narrow D-pillar trim -1-.
- ♦ Installing
  - – Install the narrow D-pillar trim -1- in the reverse order of removal.

2 - Nuts (3x)

- ❑ Tightening torque 4 Nm.

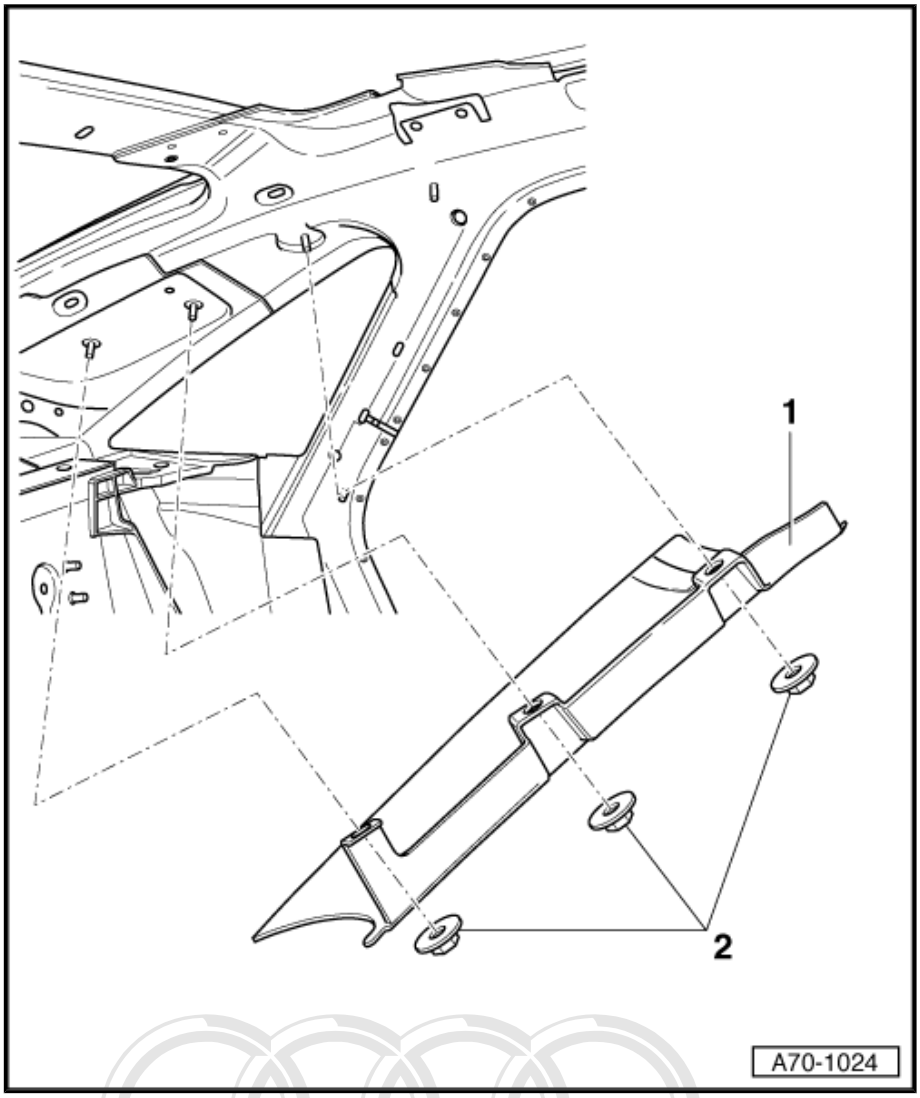

Protected by copyright. Copying for private or commercial purposes, in part or in whole, is not permitted unless authorised by AUDI AG. AUDI AG does not guarantee or accept any liability with respect to the correctness of information in this document. Copyright by AUDI AG.

6.13 Removing and installing roof end trim

1 - Clips (4x)

2 - Roof end trim

- Removing
  - Unfasten the roof end trim -2- at the clips -1- (4x).
  - Detach the roof end trim -2-.
- Installing
  - Install the roof end trim -2- in the reverse order of removal.

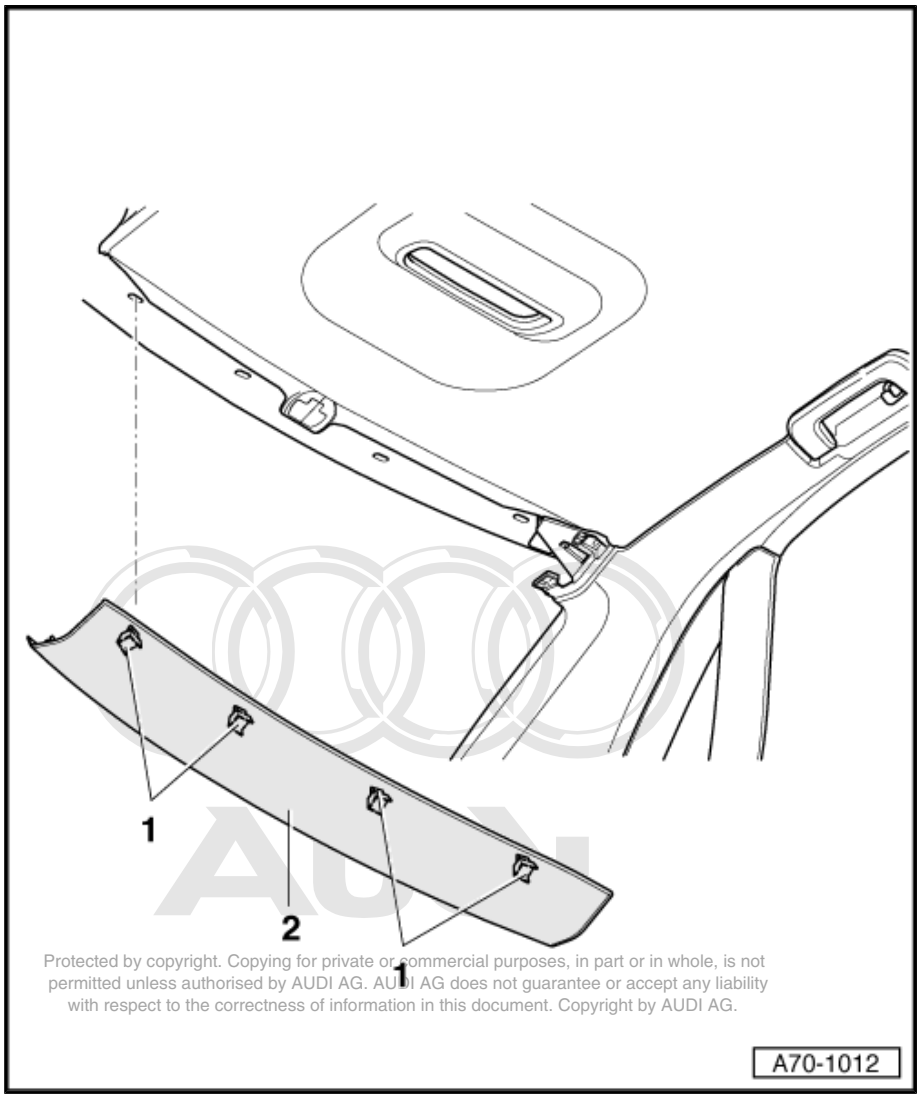

Protected by copyright. Copying for private or commercial purposes, in part or in whole, is not permitted unless authorised by AUDI AG. AUDI AG does not guarantee or accept any liability with respect to the correctness of information in this document. Copyright by AUDI AG.

6.14 Removing and installing rear shelf

Special tools and workshop equipment required

- Torque wrench -V.A.G 1783-

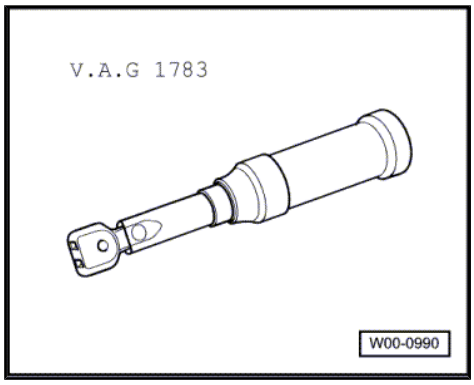

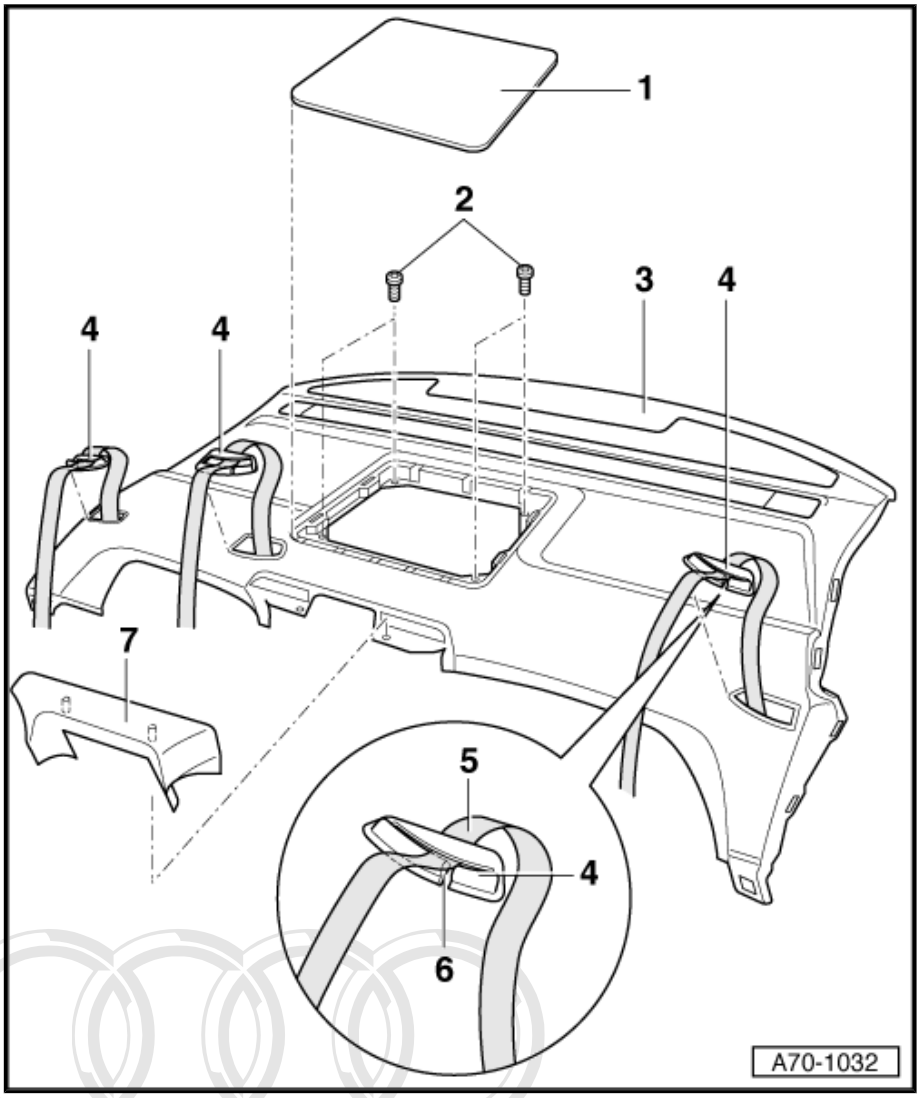

1 - Loudspeaker panel

2 - Bolts (4x)

3 - Rear shelf

♦ Removing

- Remove the rear seat bench ⇒ page 333 .
- Remove the rear seat backrest ⇒ page 334 .
- Remove the D-pillar trim ⇒ page 258 .
- Remove the narrow D-pillar trim ⇒ page 260 .
- Remove the C-pillar trim ⇒ page 256 .
- Sun blind fitted: Retract the sun blind.
- Unclip the cover panel -7-.
- Prise out the loudspeaker panel -1-.
- Unscrew the bolts -2- (4x).
- Sun blind fitted: Remove the lower rear shelf trim ⇒ page 278 .
- Unscrew the sun blind bolts in the luggage compartment ⇒ page 264
- Sun roof and/or 3rd brake light: Unplug the connectors.
- Remove the left and right belt anchorage points ⇒ page 113 and ⇒ page 114 .
- Remove the centre belt anchorage point ⇒ page 114 .
- Prise out the covers of the webbing guides -4- (3x).
- Guide the webbing -5- (3x) out of the openings in the covers -6- (3x).
- Take out the rear shelf -3-.

♦ Installing

- Install the rear shelf -3- in the reverse order of removal.

4 - Webbing guide covers (3x)

5 - Webbing (3x)

6 - Openings in webbing guide covers (3x)

7 - Trim

Protected by copyright. Copying for private or commercial purposes, in part or in whole, is not permitted unless authorised by AUDI AG. AUDI AG does not guarantee or accept any liability with respect to the correctness of information in this document. Copyright by AUDI AG.

Bolted joint for electric sun blind in luggage compartment

– Unscrew the bolts -1- (4x).

♦ Tightening torque 4 Nm.

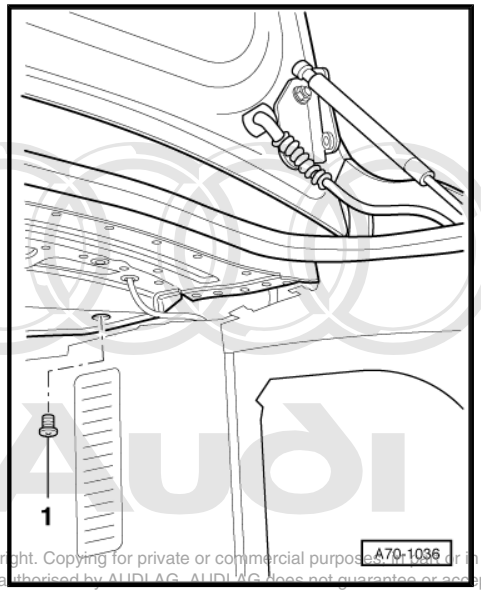

Protected by copyright. Copying for private or commercial purposes, in part or in whole, is not permitted unless authorised by AUDI AG. AUDI AG does not guarantee or accept any liability with respect to the correctness of information in this document. Copyright by AUDI AG.

6.15 Removing and installing electric rear window sun blind

Note

The rear shelf is shown from the rear.

1 - Electric sun blind

- ❑ Retract the sun blind -1-.
- ❑ Remove the rear seat bench ⇒ page 333 .
- ❑ Remove the rear seat backrest ⇒ page 334 .
- ❑ Remove the rear shelf ⇒ page 262 .
- ❑ Pull out the sun blind approx. 50 mm at the covers with the wheel -6-.
- ❑ Jam a suitable object between the sun blind and rear shelf.
- ❑ Unscrew the bolts -5- (2x).
- ❑ Detach the covers -6- (2x) outwards.
- ❑ Unscrew the nuts -3- (7x).
- ❑ Detach the wiring harness -4- from the rear shelf -2-.
- ❑ Take out the sun blind -2-.

2 - Rear shelf

3 - Nuts (7x)

4 - Wiring harness

5 - Bolts (2x)

6 - Covers (2x)

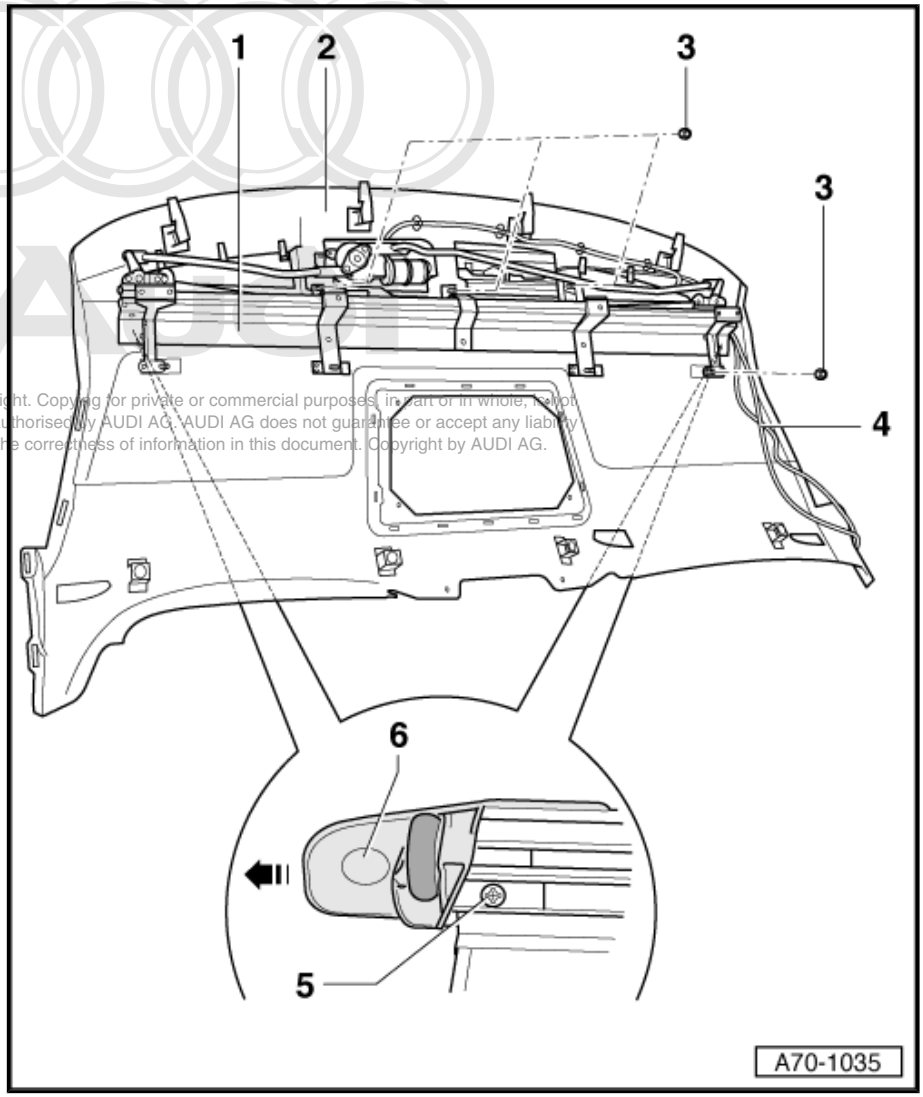

This audio is copyright. Copying for private or commercial purposes, in part or in whole, is not permitted unless authorised by AUDI AG. AUDI AG does not guarantee or accept any liability with respect to the correctness of information in this document. Copyright by AUDI AG.

6.16 Removing and installing rear shelf replacement parts

1 - Rear shelf

2 - Loudspeaker panel

♦ Removing

– Prise out the loudspeaker panel -2- upwards.

3 - Vent panel with third brake light

♦ Removing

– Unfasten the vent panel -3- upwards from the clips -4- (6x) and pull out the vent panel -3- inwards.

4 - Clips (6x)

5 - Cover

♦ Removing

– Unfasten the cover -5- at the clips -6- (2x) and pull out the cover -5- inwards.

6 - Clips (2x)

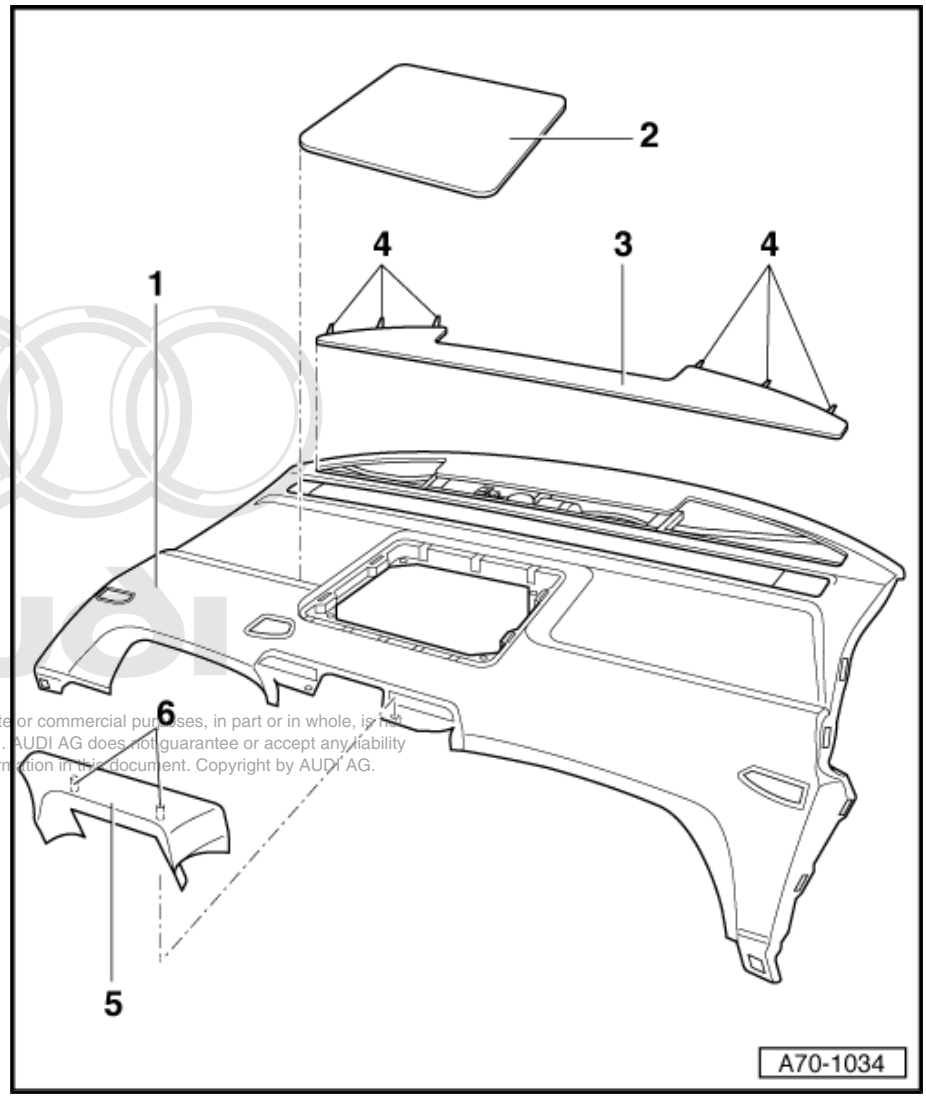

Protected by copyright. Copying for private or commercial purposes, in part or in whole, is not permitted unless authorised by AUDI AG. AUDI AG does not guarantee or accept any liability with respect to the correctness of information in this document. Copyright by AUDI AG.

6.17 Removing and installing floor covering

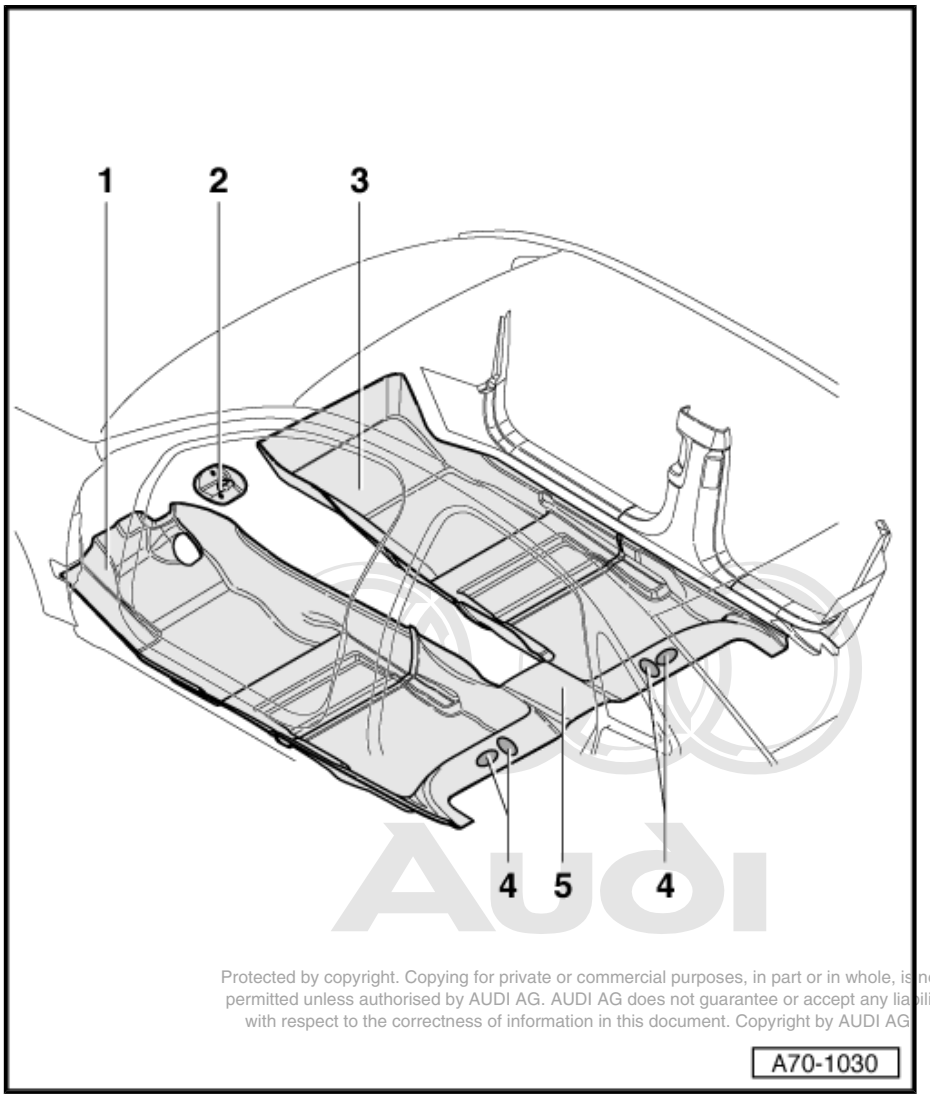

Protected by copyright. Copying for private or commercial purposes, in part or in whole, is not permitted unless authorised by AUDI AG. AUDI AG does not guarantee or accept any liability with respect to the correctness of information in this document. Copyright by AUDI AG

1 - Driver side floor covering

♦ Removing

- Remove the seat ⇒ page 282 .
- Remove the lower A-pillar trim ⇒ page 253 .
- Remove the foot rest (driver side) ⇒ page 253 .
- Take out the cover plate for the accelerator pedal stop -2-.
- Remove the centre console ⇒ page 19 .
- Fold up the floor covering lengthways and take it out of the vehicle.

2 - Cover plate for accelerator pedal stop

3 - Front passenger side floor covering

♦ Removing

- Remove the seat ⇒ page 282 .
- Remove the lower A-pillar trim ⇒ page 253 .
- Remove the centre console ⇒ page 19 .
- Fold up the floor covering lengthways and take it out of the vehicle.

4 - Plastic sleeves (4x)

5 - Rear floor covering

♦ Removing

- Remove the right and left front seats ⇒ page 282 .
- Remove the centre console ⇒ page 19 .
- Remove the rear seat bench ⇒ page 333 .
- Remove the lower B-pillar trim ⇒ page 256 .
- Remove the wheel housing trim ⇒ page 258 .
- Unclip the plastic sleeves -4- (4x) from the body.
- Fold up the floor covering lengthways and take it out of the vehicle.

♦ Installing

Note

The floor covering is susceptible to tearing at the cut-outs. Fit the floor covering in the vehicle carefully.

- Install the floor covering in the reverse order of removal.

6.18 Removing and installing box for tool kit and hazard warning triangle

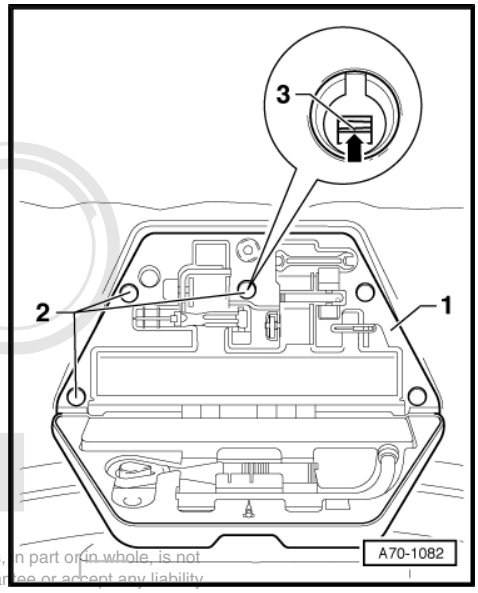

Removing

– Open the box for the tool kit and hazard warning triangle -1-.

– Unclip the covers -2- (5x).

– Use a flat screwdriver to carefully press the tabs -3- upwards in arrow direction.

– Detach the box for the tool kit and hazard warning triangle.

Installing

Install in reverse order. Pay attention to the following:

♦ Make sure all retainer tabs (5x) are properly engaged.

Protected by copyright. Copying for private or commercial purposes, in part or in whole, is not permitted unless authorised by AUDI AG. AUDI AG does not guarantee or accept any liability with respect to the correctness of information in this document. Copyright by AUDI AG.

6.19 Removing and installing rear lid trim

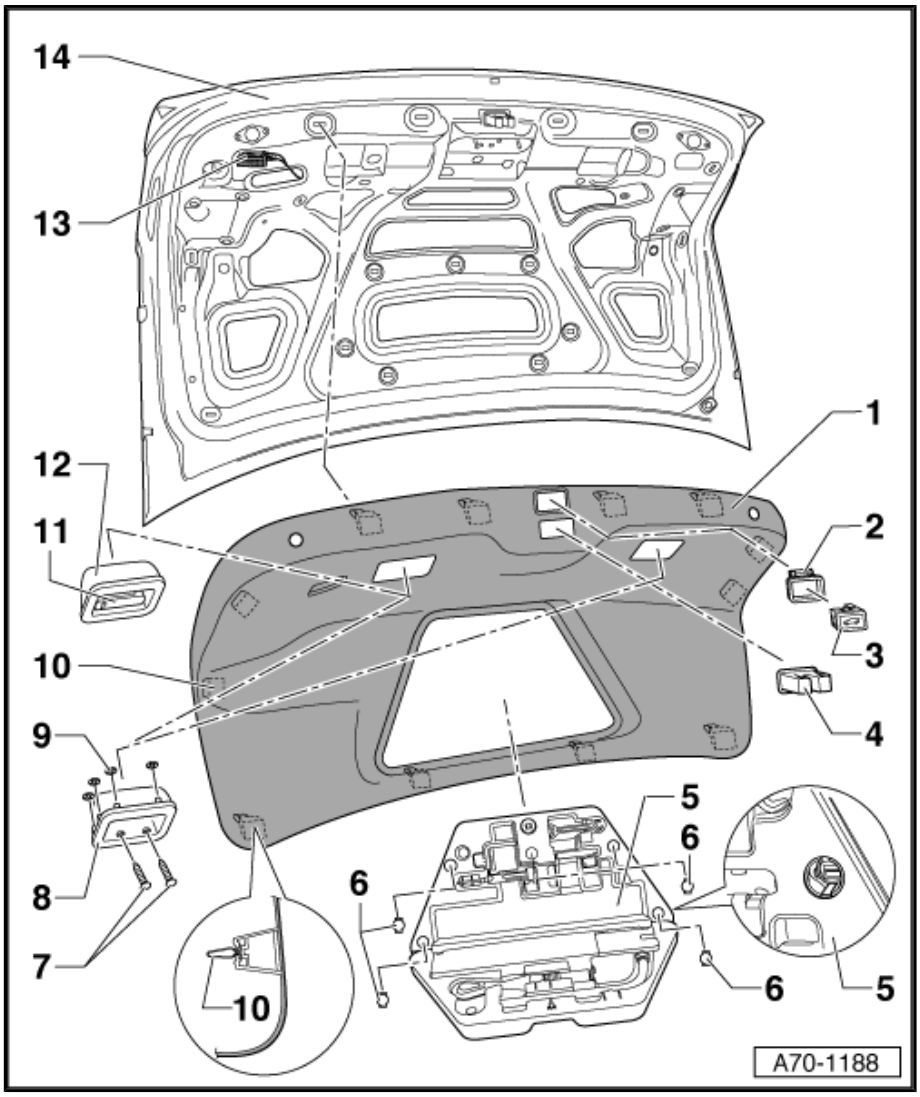

1 - Rear lid trim

♦ Removing

– Detach the lock cover -4-.
– Remove the luggage compartment light -11- ⇒ Electrical system; Rep. gr. 96 .
– Remove the button to close rear lid in luggage compartment (-E406-) -3- ⇒ page 271 .
– Remove the box for the tool kit and hazard warning triangle -5- ⇒ page 268 .
– Screw the bolts -7- out of the grip mouldings (2x per moulding).

USA only

– Remove the emergency release handle ⇒ page 270 .

All vehicles (continued)

– Unfasten the rear lid trim -1- at the clips -10- (12x) from underneath.
– Detach the rear lid trim -1-.

♦ Installing

Install in reverse order. Pay attention to the following:

♦ Replace damaged clips -10-.

♦ Before fitting the rear lid trim, make sure the clips -10- are correctly positioned.

2 - Frame

♦ Removing

– Remove the button to close rear lid in luggage compartment (-E406-) -3- ⇒ page 271 .
– Unclip the frame on the back at the top.
– Take the frame out of the rear lid trim opening.

♦ Installing

Install in reverse order.

3 - Button to close rear lid in luggage compartment -E406- (optional)

❑ Removing and installing ⇒ page 271
❑ Assignment ⇒ Parts catalogue

4 - Lock cover

❑ Detach lock cover to remove.
❑ On installation, ensure proper engagement with lock.

Protected by copyright. Copying for private or commercial purposes, in part or in whole, is not permitted unless authorised by AUDI AG. AUDI AG does not guarantee or accept any liability with respect to the correctness of information in this document. Copyright by AUDI AG.

5 - Box for tool kit and hazard warning triangle

❑ Removing and installing ⇒ page 268

6 - Cover

❑ 5x

7 - Bolt, 2 Nm
- ❑ 2x per moulded recess

8 - Grip moulding
- ❑ Removing and installing ⇒ page 271

9 - Speed nut
- ❑ 8x per grip moulding
- ❑ Always replace after removing

Protected by copyright. Copying for private or commercial purposes, in part or in whole, is not permitted unless authorised by AUDI AG. AUDI AG does not guarantee or accept any liability with respect to the correctness of information in this document. Copyright by AUDI AG.

10 - Clip
- ❑ 12x
- ❑ Replace if damaged

11 - Emergency release handle
- ❑ For USA only
- ❑ Removing and installing ⇒ page 270

12 - Grip moulding
- ❑ For USA only
- ❑ Clipped into rear trim

13 - Luggage compartment light
- ❑ Removing and installing: ⇒ Electrical system; Rep. gr. 96 .

14 - Rear lid

6.20 Removing and installing emergency release handle

Special tools and workshop equipment required

- ♦ Torque wrench -V.A.G 1783-

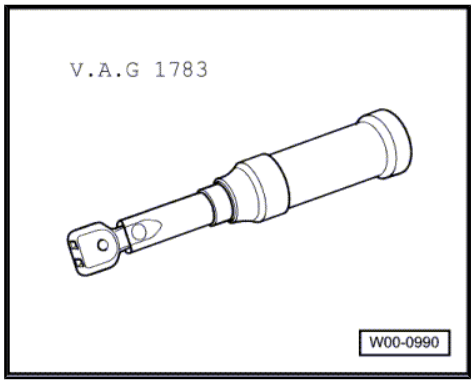

Removing

– Unclip the cover -1-.
– Screw out the bolt -4-.
– Pull off the handle -2-.

3 - Moulded recess clipped into rear lid trim

Installing

Install in reverse order.

Tightening torque:

Handle to moulded recess: 4.5 Nm

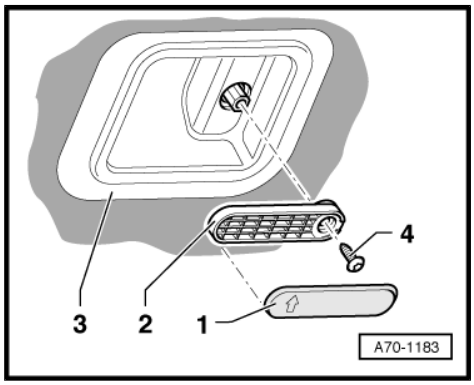

6.21 Removing and installing grip moulding

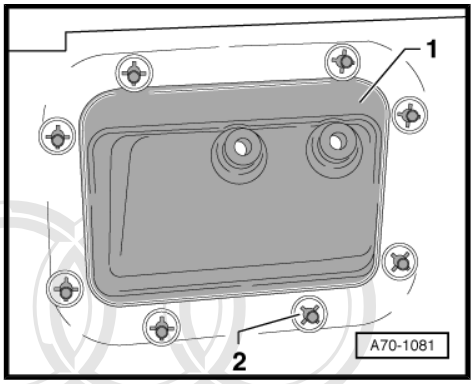

Removing

– Remove the rear lid trim ⇒ Item 1 (page 269) .
– Remove the speed nuts -2- (8x).
– Detach the grip moulding -1-.

Installing

Install in reverse order. Pay attention to the following:

♦ Use new speed nuts (8x).

6.22 Removing and installing button to close rear lid in luggage compartment -E406-

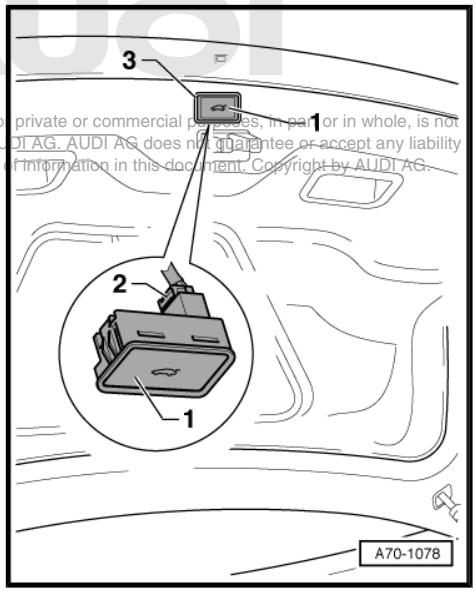

Reproduction or copying for private or commercial purposes, in part or in whole, is not permitted unless authorised by AUDI AG. AUDI AG does not guarantee or accept any liability with respect to the correctness of information in this document. Copyright by AUDI AG.

Removing

– Use a blunt flat screwdriver to carefully prise the button to close rear lid (-E406-) -1- out of the frame -3-. To do so, apply the flat screwdriver to the short sides of the rear lid close button.
– Pull the rear lid close button out of the rear lid trim.
– Unplug the connector -2-.

Installing

Install in reverse order.

6.23 Removing and installing rear cross panel trim

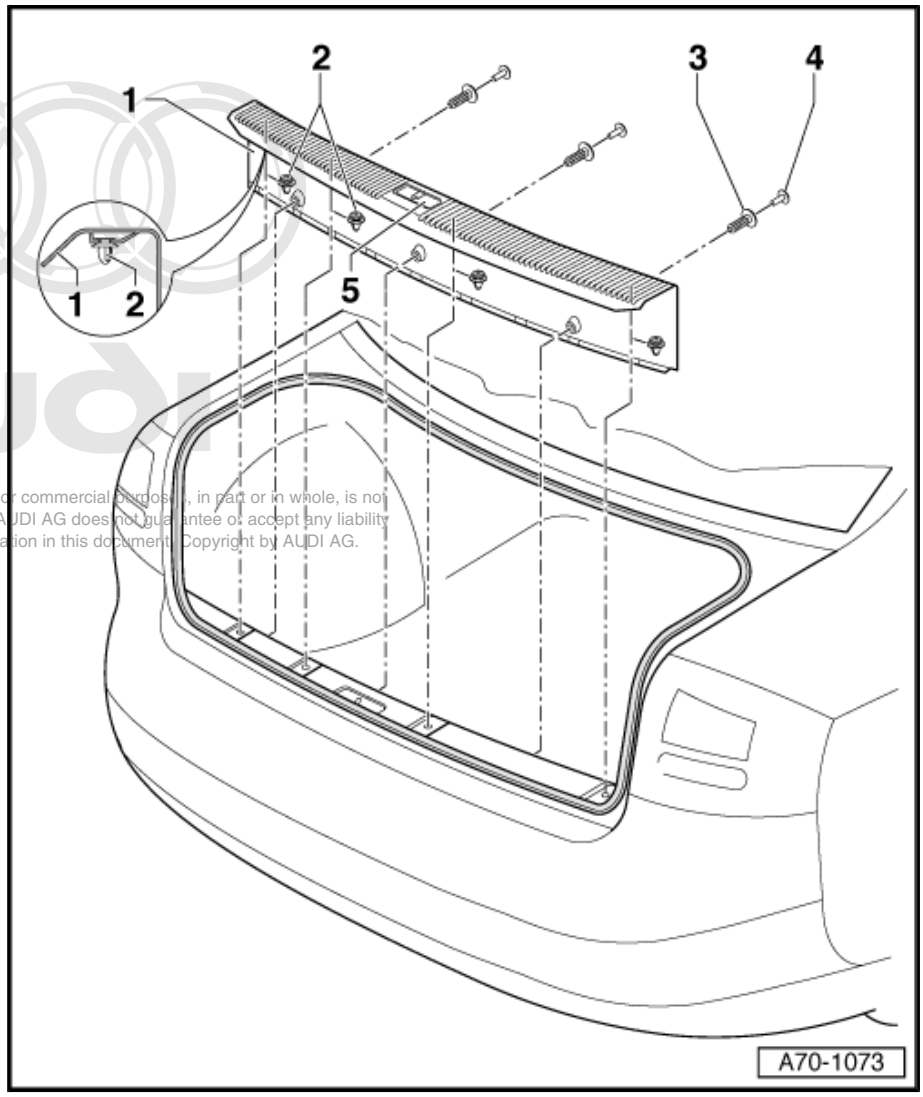

1 - Rear cross panel trim

- Removing
  - Use a flat screwdriver to prise out the caps -4- of the expanding clips -3- (3x).
  - Remove the expanding clips -3- (3x).
  - Lift out the rear cross panel trim -1- and in doing so unfasten the clips -2-.
- Installing

Install in reverse order. Pay attention to the following:

- Replace damaged clips -2- and expanding clips -3- as well as caps -4-.
- The tabs on the side of the rear cross panel trim must be located in the recesses in the luggage compartment side trim.
- Make sure the seal is properly positioned after fitting the trim.

Reproduction, transmission or copying of this document, in whole or in part, private or commercial purposes, in any form or by any means, is not permitted unless authorised by AUDI AG. AUDI AG does not guarantee or accept any liability with respect to the correctness of information in this document. Copyright by AUDI AG.

2 - Clips (4x)

- ❑ Replace if damaged

3 - Expanding clips (3x)

- ❑ Replace if damaged

4 - Cap (3x)

- ❑ For expanding clip
- ❑ Replace if damaged

5 - Striker cover

6.24 Removing and installing luggage compartment side trim

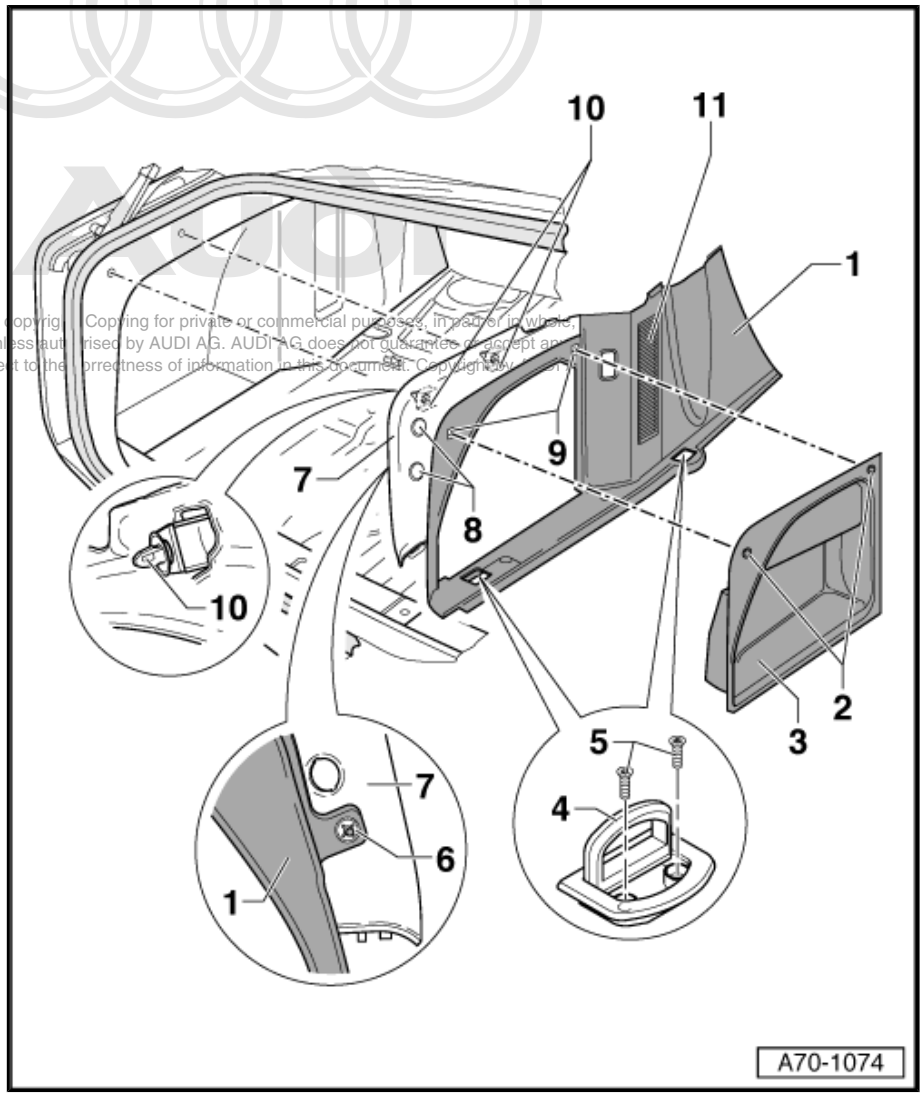

Protected by copyright. Copying for private or commercial purposes, in part or in whole, is not permitted unless authorised by AUDI AG. AUDI AG does not guarantee or accept any liability with respect to the correctness of information in this document. Copyright by AUDI AG.

1 - Luggage compartment side trim

- ♦ Removing
  - – Take out the luggage compartment floor covering ⇒ page 277 .
  - – Remove the rear cross panel trim ⇒ page 272 .
  - – Open the upper fasteners -2-.
  - – Take out the shelf -3-.
  - – Remove the socket ⇒ page 274 .
  - – Raise the fastening ring -4- (4x).
  - – Slacken off two cross-head bolts -5- in each of the fastening rings.
  - – Unfasten the clips -10-.
  - – Detach the luggage compartment side trim.
- ♦ Installing

Install in reverse order. Pay attention to the following:

- ♦ On completion of installation, fold the rear lid rubber seal over the luggage compartment side trim -1-.

2 - Upper fastener (2x)

- ❑ For shelf -3-

3 - Shelf

4 - Fastening rings

- ❑ Removing and installing ⇒ page 278

5 - Bolt, 5 Nm

- ❑ 2x per fastening ring

6 - Speed nut (3x)

- ❑ Always replace after removing

7 - Drip rail trim

- ❑ Detaching drip rail trim from luggage compartment side trim/assembling ⇒ page 275

8 - Cap

- ❑ Assignment ⇒ Parts catalogue
- ❑ Unclip/clip in

9 - Lower fastener

- ❑ For upper fastener ⇒ Item 2 (page 273) -
- ❑ Engaged with luggage compartment side trim

10 - Clips (2x)

- ❑ Replace if damaged

11 - Ventilation grille

- ❑ Removing and installing ⇒ page 274

6.25 Removing and installing luggage compartment socket

Special tools and workshop equipment required

- Front end hook -3370-

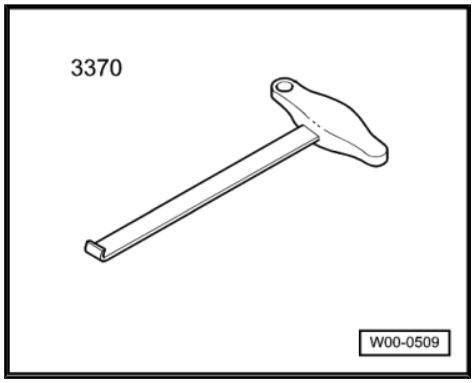

Removing

– Carefully pull the luggage compartment socket -1- out of the luggage compartment side trim using the front end hook -3370- .

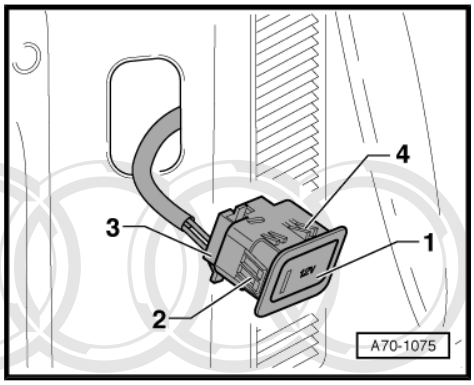

Note

Pay attention to the fasteners -2- and -4- when pulling out.

– Unplug the connector -3-.

Installing

Install in reverse order.

6.26 Removing and installing ventilation grille

Special tools and workshop equipment required

- Front end hook -3370-

Protected by copyright. Copying for private or commercial purposes, in part or in whole, is not permitted unless authorised by AUDI AG. AUDI AG does not guarantee or accept any liability with respect to the correctness of information in this document. Copyright by AUDI AG.

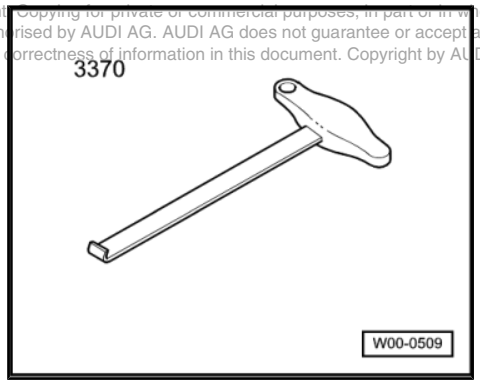

Removing

– Pull the ventilation grille -1- with the front end hook -3370- out of the luggage compartment side trim -2- in -arrow direction- on the side facing forwards.
– Detach the channel section of the ventilation grille in the direction of travel from the luggage compartment side trim -2-.
– Take out the ventilation grille.

Installing

Install in reverse order.

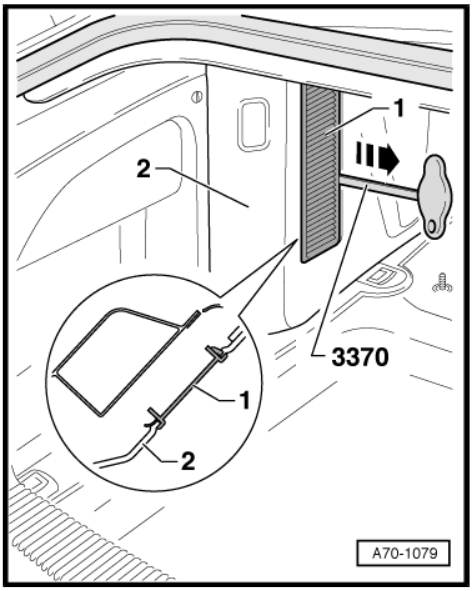

6.27 Separating luggage compartment side trim and drip rail trim/assembling

Removing

– Remove the luggage compartment side trim ⇒ page 273 .
– Remove the speed nuts -3- (3x).
– Detach the drip rail trim -1- from the luggage compartment side trim -2-.

Installing

Install in reverse order, paying attention to the following:

♦ Use new speed nuts (3x).

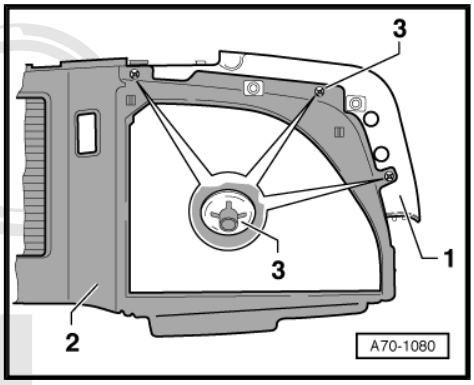

6.28 Removing and installing back panel trim

Protected by copyright. Copying for private or commercial purposes, in part or in whole, is not permitted unless authorised by AUDI AG. AUDI AG does not guarantee or accept any liability with respect to the correctness of information in this document. Copyright by AUDI AG.

Special tools and workshop equipment required

♦ Removal wedge -3409-

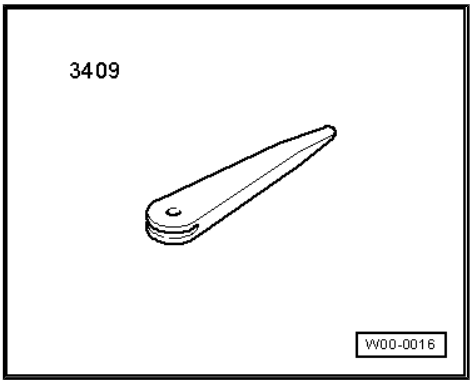

1 - Back panel trim

- Removing
  - Remove the luggage compartment floor covering ⇒ page 277 .
  - Remove the lower rear shelf trim ⇒ page 278 .
  - Use a flat screwdriver to prise out the caps -3- of the expanding clips -2- (7x).
  - Remove the expanding clips -2- (7x).
  - Pull the back panel trim -1- out from under the frame of the ski bag -4-.
  - Take out the back panel trim.
- Installing

Install in reverse order. Pay attention to the following:

- Replace damaged expanding clips -2- and caps -3-.
- At the start of assembly, jam the back panel trim beneath the frame of the ski bag. To do so, make use of the removal wedge -3409- if necessary.
- Take care to avoid creases at the back panel trim.

2 - Expanding clips (7x)

- ❑ Replace if damaged

3 - Cap (7x)

- ❑ For expanding clip -2-
- ❑ Replace if damaged

4 - Ski bag

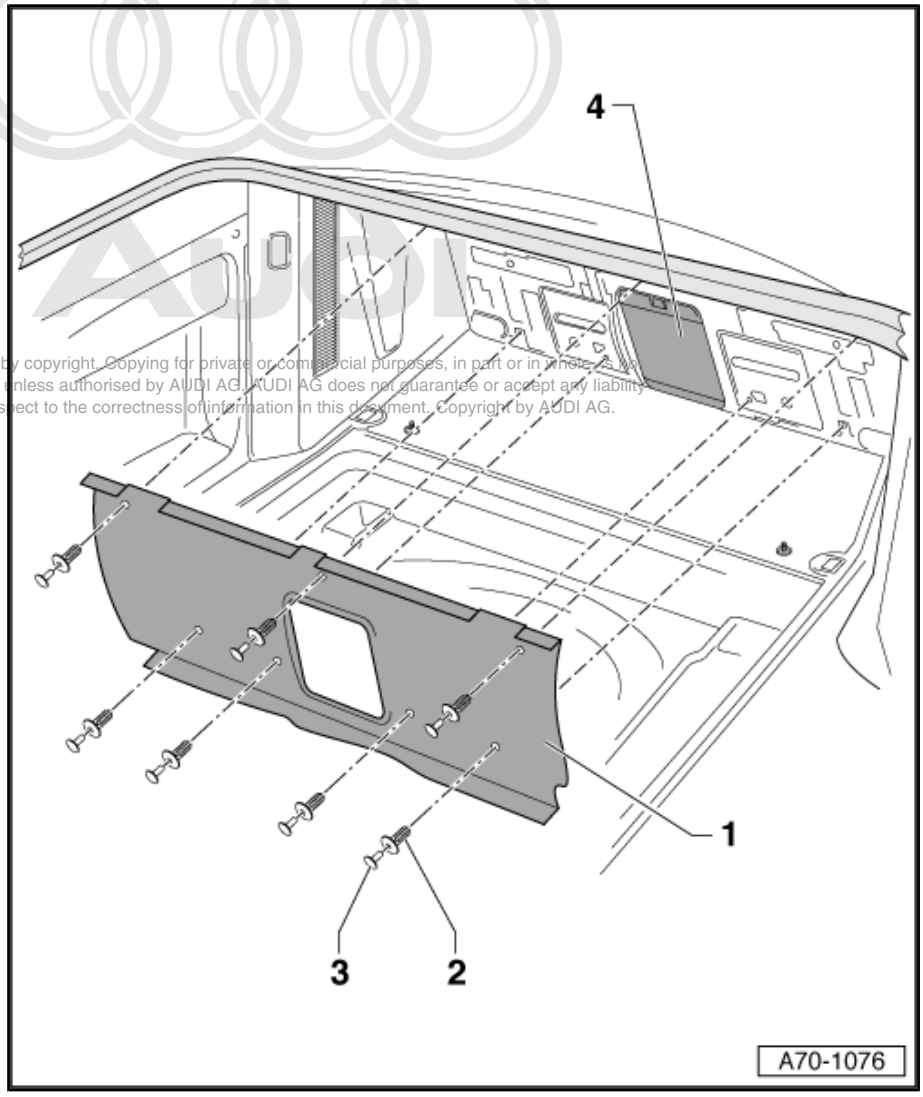

Protected by copyright. Copying for private or commercial purposes, in part or in whole, is not permitted unless authorised by AUDI AG. AUDI AG does not guarantee or accept any liability with respect to the correctness of information in this document. Copyright by AUDI AG.

6.29 Removing and installing luggage compartment floor covering

1 - Luggage compartment floor covering

- Removing
  - Unscrew the clip nuts -5-.
  - Lift the luggage compartment floor covering -1- in arrow direction and take it out of the vehicle.
- Installing

Install in reverse order.

2 - Mounting for luggage compartment floor covering retainer

3 - Luggage compartment floor covering retainer

4 - Handle on luggage compartment floor covering retainer

- Removing
  - Lift the handle -4- of the retainer -3-.
  - Lift the retainer -3- by way of the handle -4- out of the mounting -2-.
- Installing

Install in reverse order.

5 - Clip nut

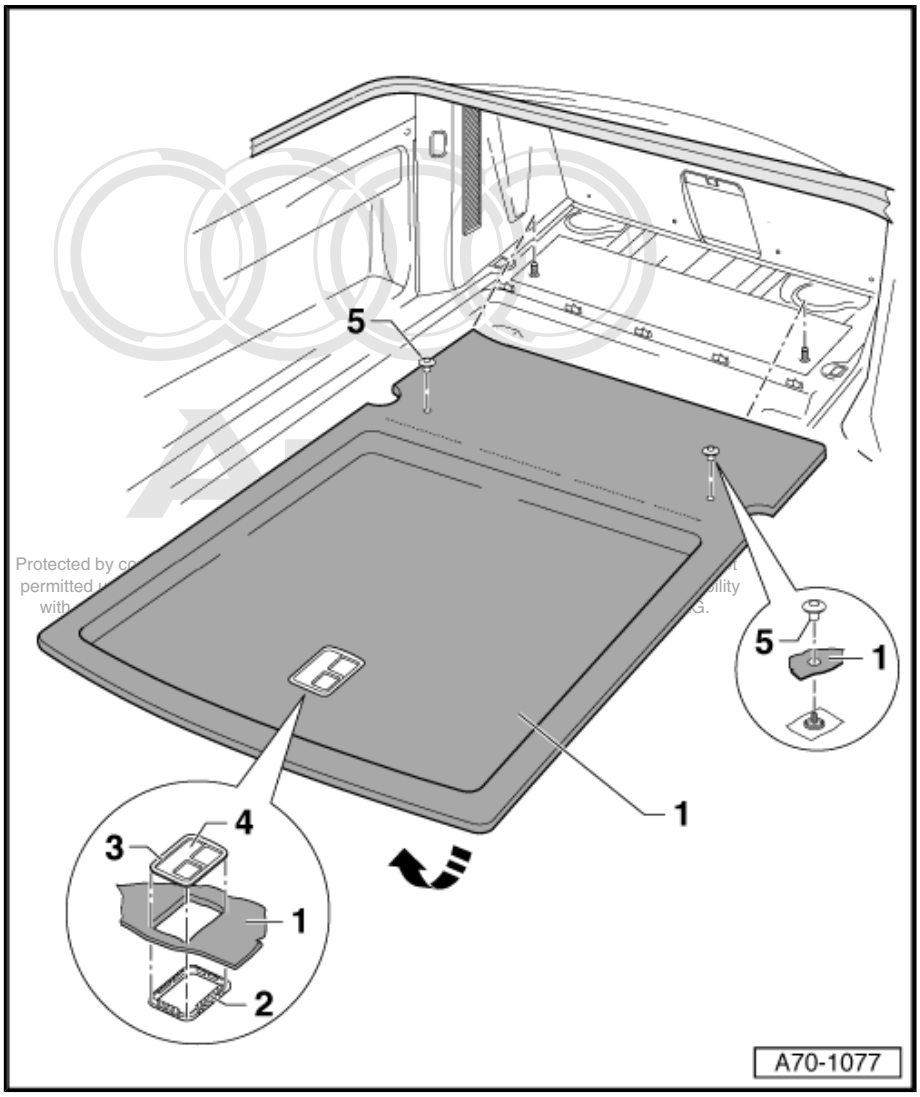

6.30 Removing and installing rear shelf lower trim

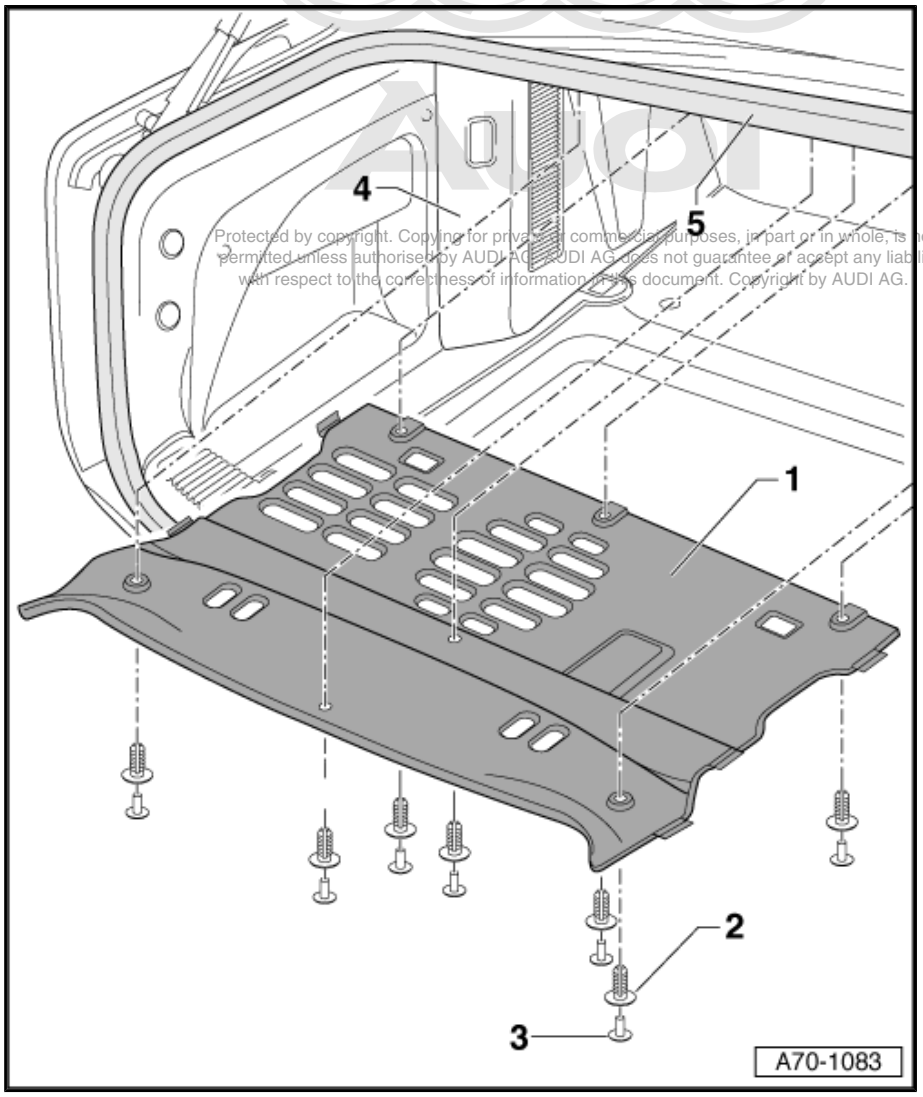

Protected by copyright. Copying for private or commercial purposes, in part or in whole, is not permitted unless authorised by AUDI AG. AUDI AG does not guarantee or accept any liability with respect to the correctness of information in this document. Copyright by AUDI AG.

1 - Rear shelf lower trim

- Removing
  - Remove the luggage compartment lights from the rear shelf lower trim ⇒ Electrical system; Rep. gr. 96 .
  - Use a flat screwdriver to prise off the caps -3- of the expanding clips -2-.
  - Remove the expanding clips -2- (7x).

> ⚠ **Caution**
>
> *The application of excessive force could damage the »rear shelf lower trim«. Perform the following operations carefully.*

  - Pull down the »rear shelf lower trim« -1- alternately in the centre and at the left outer side until the »rear shelf lower trim« -1- can be removed.
- Installing

Install in reverse order. Pay attention to the following:

- Replace damaged expanding clips -2- and caps -3-.
- Make sure the side guides of the »rear shelf lower trim« -1- are correctly positioned in the side trim panels.
- On completion of installation, fold the rear lid rubber seal -5- over the rear shelf lower trim.

2 - Expanding clips (7x)

- ❑ Replace if damaged

3 - Cap (7x)

- ❑ For expanding clip -2-
- ❑ Replace if damaged

4 - Luggage compartment side trim

5 - Rear lid rubber seal

6.31 Removing and installing fastening rings

Special tools and workshop equipment required

♦ Torque wrench -V.A.G 1783-

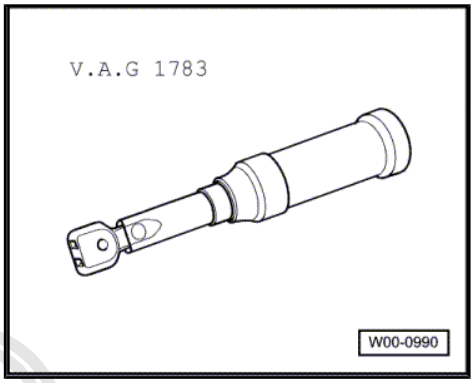

Removing

– Raise the fastening ring.
– Screw out the bolts -2-.
– Detach the fastening ring -1-.

Installing

Install in reverse order.

Tightening torque:

⇒ Item 5 (page 273)

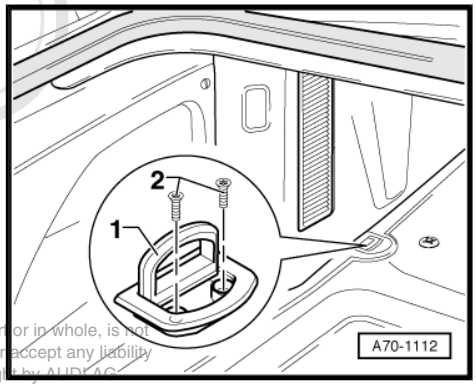

Protected by copyright. Copying for private or commercial purposes, in part or in whole, is not permitted unless authorised by AUDI AG. AUDI AG does not guarantee or accept any liability with respect to the correctness of information in this document. Copyright by AUDI AG.

72 – Seat frames

1 Front seats (memory seat, electrically operated seat)

Block diagram

- ⇒ „1.1 Removing and installing seat“, page 282
- ⇒ „1.2 Connecting airbag adapter VAS 6229 “, page 284
- ⇒ „1.3 Unplugging connector for side airbag“, page 285
- ⇒ „1.4 Pin assignment of emergency power supply connector“, page 285
- ⇒ „1.5 Removing and installing front runner cover“, page 286
- ⇒ „1.6 Removing and installing rear runner cover“, page 287
- ⇒ „1.7 Bump stop for front passenger's seat (USA)“, page 288
- ⇒ „1.8 Removing and installing front seat backrest“, page 288
- ⇒ „1.9 Replacing seat pan“, page 291
- ⇒ „1.10 Removing and installing side trim on sill panel side“, page 292
- ⇒ „1.11 Removing and installing side trim on tunnel side“, page 293
- ⇒ „1.12 Removing and installing front trim“, page 293
- ⇒ „1.13 Removing and installing seat side trim holder“, page 294
- ⇒ „1.13 Removing and installing seat side trim holder“, page 294
- ⇒ „1.14 Removing and installing seat adjustment switch“, page 295
- ⇒ „1.15 Removing and installing switch for 4-way lumbar support“, page 295
- ⇒ „1.16 Removing and installing seat and steering column adjustment control unit with memory J136 / front passenger seat adjustment with memory control unit J521 “, page 295
- ⇒ „1.17 Removing and installing connector point“, page 296
- ⇒ „1.18 Removing and installing seat longitudinal adjustment motor“, page 296
- ⇒ „1.19 Replacing seat upper frame“, page 299
- ⇒ „1.20 Replacing seat pan“, page 301
- ⇒ „1.21 Removing and installing safety latch“, page 301
- ⇒ „1.22 Removing and installing seat height adjustment motor“, page 302
- ⇒ „1.23 Removing and installing seat angle adjustment motor“, page 304
- ⇒ „1.24 Removing and installing seat cushion extension motor“, page 305

Protected by copyright. Copying for private or commercial purposes, in part or in whole, is not permitted unless authorised by AUDI AG. AUDI AG does not guarantee or accept any liability with respect to the correctness of information in this document. Copyright by AUDI AG.

- ⇒ „1.25 Removing and installing backrest adjustment motor“, page 306
- ⇒ „1.26 Removing and installing upper backrest cover panel“, page 309
- ⇒ „1.27 Removing and installing lower backrest cover panel“, page 310
- ⇒ „1.28 Removing and installing 4-way lumbar support“, page 311
- ⇒ „1.29 Removing and installing lumbar support adjustment motors“, page 312
- ⇒ „1.30 Removing and installing head restraint adjustment motor“, page 313
- ⇒ „1.31 Removing and installing upper backrest adjustment motor“, page 314
- ⇒ „1.32 Removing and installing electrically operated head restraint“, page 315
- ⇒ „1.33 Removing and installing motor for head restraint adjustment with active head restraint unit“, page 316
- ⇒ „1.34 Removing and installing seat ventilation unit (seat pan)“, page 317
- ⇒ „1.35 Removing and installing seat ventilation unit (backrest)“, page 317
- ⇒ „1.36 Removing rear footwell light“, page 318
- ⇒ „1.37 Electrically operated front seat wiring“, page 318

Protected by copyright. Copying for private or commercial purposes, in part or in whole, is not permitted without the consent of AUDI AG. AUDI AG does not guarantee or accept any liability with respect to the correctness of information in this document. Copyright by AUDI AG.

Special tools and workshop equipment required

- Engine and gearbox support -VAS 6095-

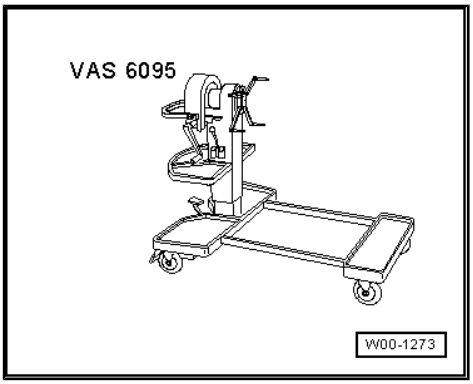

- Seat repair stand -VAS 6136-

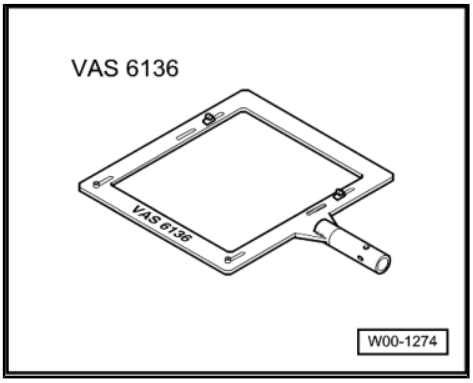

- Airbag adapter -VAS 6229-

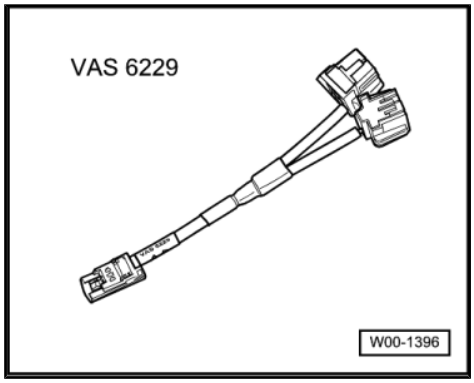

1.1 Removing and installing seat

Special tools and workshop equipment required

- Torque wrench -V.A.G 1331/-

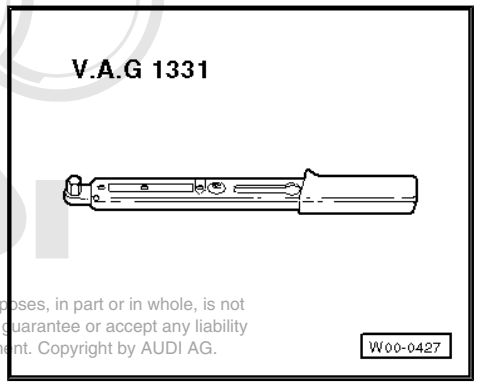

Protected by copyright. Copying for private or commercial purposes, in part or in whole, is not permitted unless authorised by AUDI AG. AUDI AG does not guarantee or accept any liability with respect to the correctness of information in this document. Copyright by AUDI AG.

Note

- *Before disconnecting the battery: Establish the radio unit code.*
- *To remove the driver's seat: Move the steering wheel to the front and upwards as far as it will go.*
- *Removal of the backrest cover panels on convenience seats involves moving the upper backrest adjuster forwards.*
- *Move the height adjuster and seat angle adjuster into the top position and the backrest to the 90° position.*

1 - Front seat

♦ Removing

- Remove the outer floor panel anchorage point ⇒ page 107 .
- Guide the webbing out of the side trim.
- Remove the front runner covers ⇒ page 286 .
- Remove the rear runner covers ⇒ page 287 .
- Move the front seat -1- as far upwards and to the rear as possible.
- Unscrew the rear bolts -2- (2x).
- Move the seat forwards.
- Unscrew the front bolts -2- (2x).

> **WARNING**
> *Heed the safety regulations for pyrotechnic components ⇒ page 94 .*

- With the ignition switched on, disconnect the battery earth wire ⇒ Electrical system; Rep. gr. 27 .
- Tilt the front seat -1- backwards.

> **Note**
> *Before disconnecting the igniter and earth wires, static must be discharged by briefly touching the door striker plate or vehicle body.*

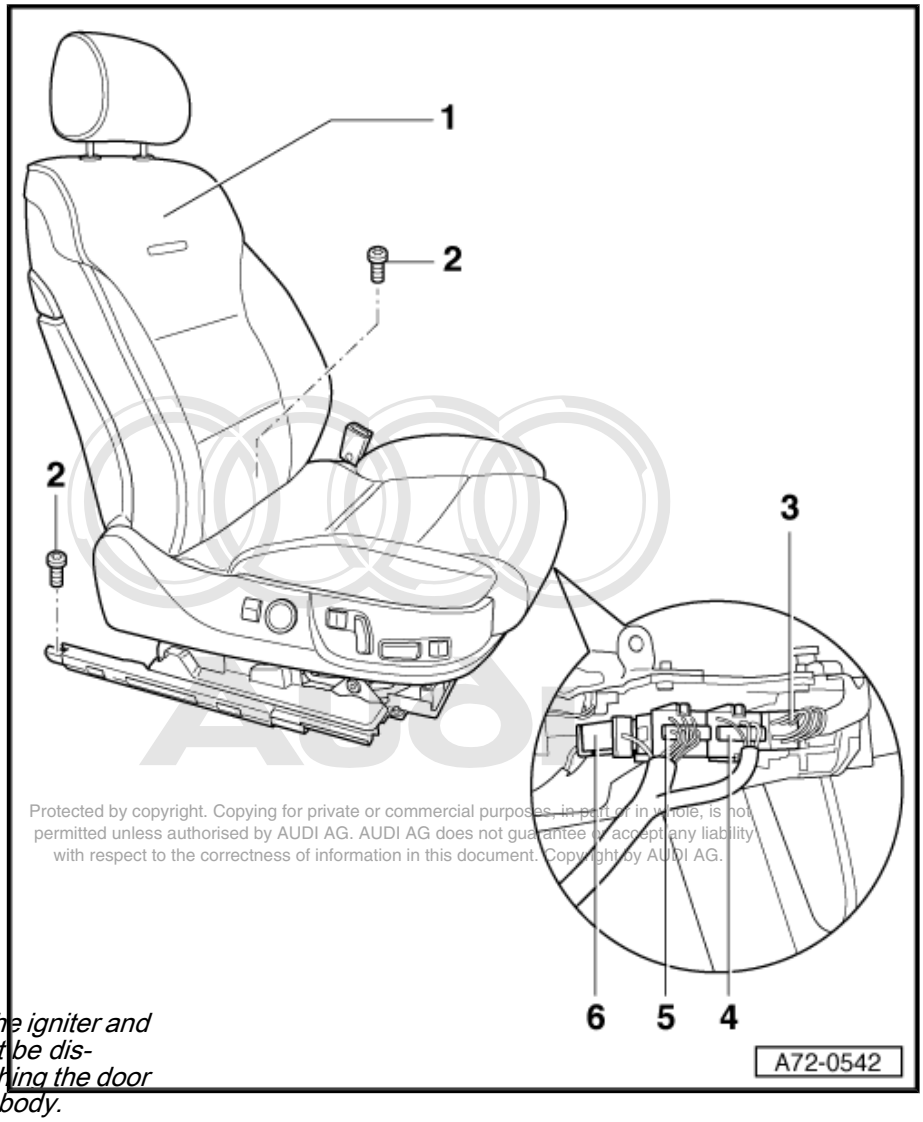

Protected by copyright. Copying for private or commercial purposes, in part or in whole, is not permitted unless authorised by AUDI AG. AUDI AG does not guarantee or accept any liability with respect to the correctness of information in this document. Copyright by AUDI AG.

- Unplug the airbag connector -6- ⇒ page 285 .
- Unplug the power supply connector -5-.
- Unplug the seat heating connector -4-.
- Connect the airbag adapter ⇒ page 284 .
- Lift the front seat -1- out of the vehicle with the assistance of a second mechanic.

♦ Installing

- Install in reverse order.
- On USA vehicles, make sure the bump stop is fitted at the front passenger's seat ⇒ page 288 .
- Switch on the ignition.

> **WARNING**
> *There must not be anyone in the vehicle when connecting the battery.*

- With the ignition switched on, connect the battery earth wire ⇒ Electrical system; Rep. gr. 27 .

2 - Bolts (4x)

❑ Tightening torque 40 Nm

3 - Emergency power supply connector for seat longitudinal, seat height and seat angle adjustment motors (black)

4 - Seat heating connector (grey)

5 - Power supply connector (red)

6 - Airbag connector (yellow)

1.2 Connecting airbag adapter -VAS 6229-

Note

Before disconnecting the igniter and earth wires, static must be discharged by briefly touching the door striker plate or vehicle body.

WARNING

Leave the airbag adapter -VAS 6229- connected to the seat until the seat has been re-installed.

1 - Airbag connector (yellow) on seat

2 - Power supply connector/ seat connector (brown)

3 - Power supply connector/ airbag adapter (brown)

4 - Airbag adapter connector (yellow)

- ❑ Plug in the airbag connector -1- and the airbag adapter connector -4-.
- ❑ Attach the power supply connector/airbag adapter -3- to the power supply connector/seat connector -2-.

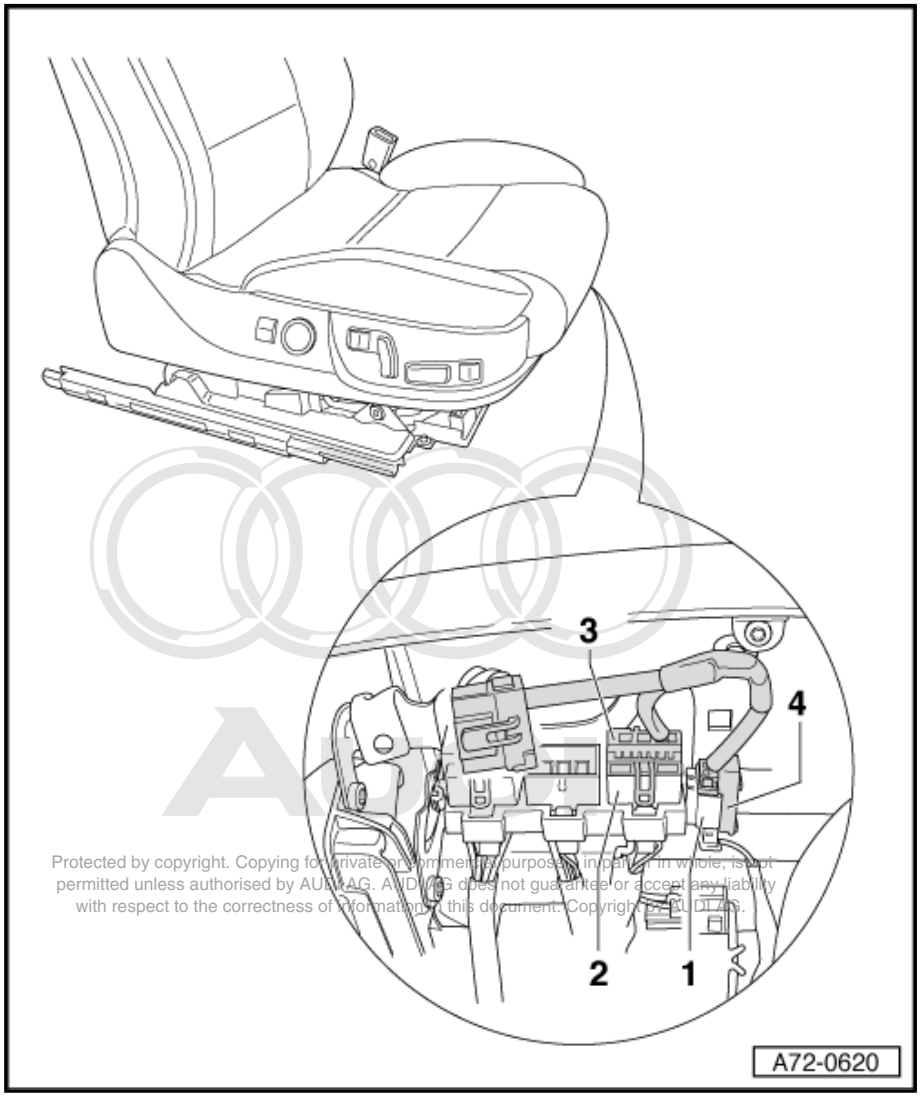

Protected by copyright. Copying for private or commercial purposes, in part or in whole, is not permitted unless authorised by AUDI AG. AUDI AG does not guarantee or accept any liability with respect to the correctness of information in this document. Copyright by AUDI AG.

1.3 Unplugging connector for side airbag

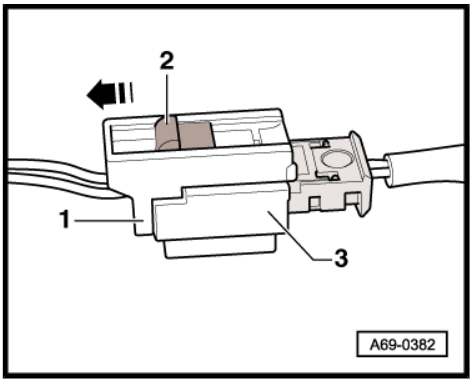

– Pull the catch -2- in arrow direction and unplug the connectors -1- and -3-.

– With the ignition switched on, connect the battery earth wire ⇒ Electrical system; Rep. gr. 27 .

Note

If the airbag warning lamp -K75- indicates a fault following installation, the event recorder must be interrogated, erased and interrogated again ⇒ Vehicle diagnostic tester.

1.4 Pin assignment of emergency power supply connector

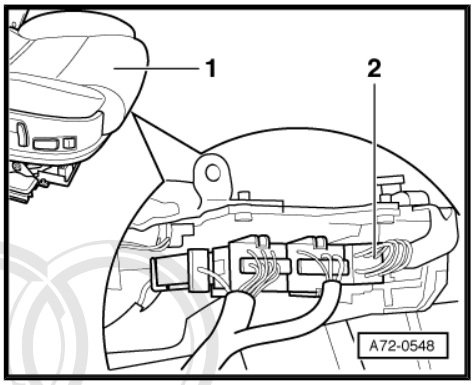

Note

- *Providing an emergency power supply for the seat longitudinal adjustment (SLV) and seat height adjustment (SHV) motors involves energising the pins at the emergency power supply connector -2-. The corresponding pins are given in the following list.*
- *The standard settings are not retained when use is made of the emergency power supply and the seat has to be re-adapted ⇒ Refer to Guided fault-finding: Adaption of motors.*

– 1: SLV switch (-)

– 2: SLV switch (+)

– 3: SHV switch (-)

– 4: SHV switch (+)

– 5: SLV motor (-)

– 6: SLV motor (+)

– 7: SHV motor (-)

– 8: SHV motor (+)

Protected by copyright. Copying for private or commercial purposes, in part or in whole, is not permitted unless authorised by AUDI AG. AUDI AG does not guarantee or accept any liability with respect to the correctness of information in this document. Copyright by AUDI AG.

1.5 Removing and installing front runner cover

1 - Front seat

2 - Runner covers (2x)

- Removing
  - Move the front seat -1- to the rearmost position.
  - Detach the runner covers -2- (2x) in arrow direction.
- Installing
  - Install in reverse order.

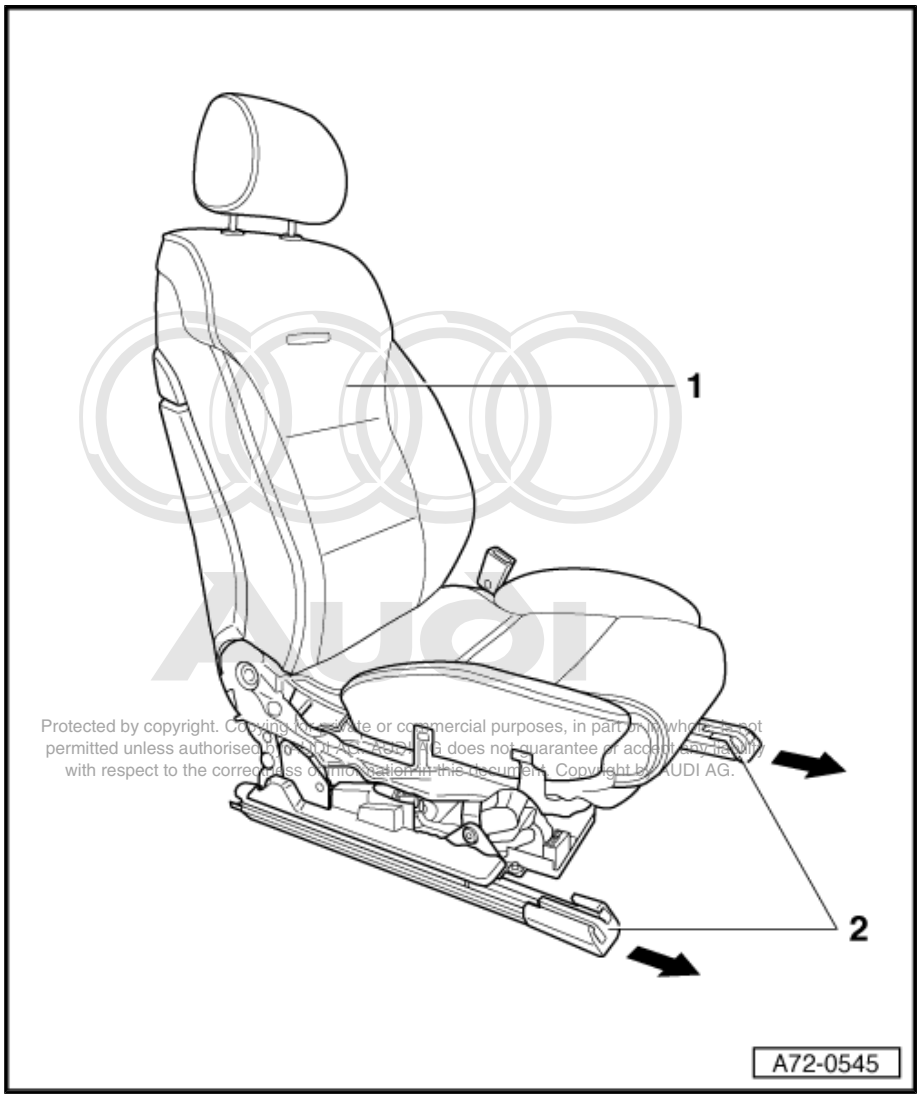

Protected by copyright. Copying for private or commercial purposes, in part or in whole, is not permitted unless authorised by AUDI AG. AUDI AG does not guarantee or accept any liability with respect to the correctness of information in this document. Copyright by AUDI AG.

1.6 Removing and installing rear runner cover

1 - Front seat

2 - Runner covers (2x)

- Removing
  - Move the front seat -1- as far forwards as possible.
  - Lift the retainer -3- in arrow direction and detach the runner cover -2-.
- Installing
  - Install in reverse order.

3 - Retainers (2x)

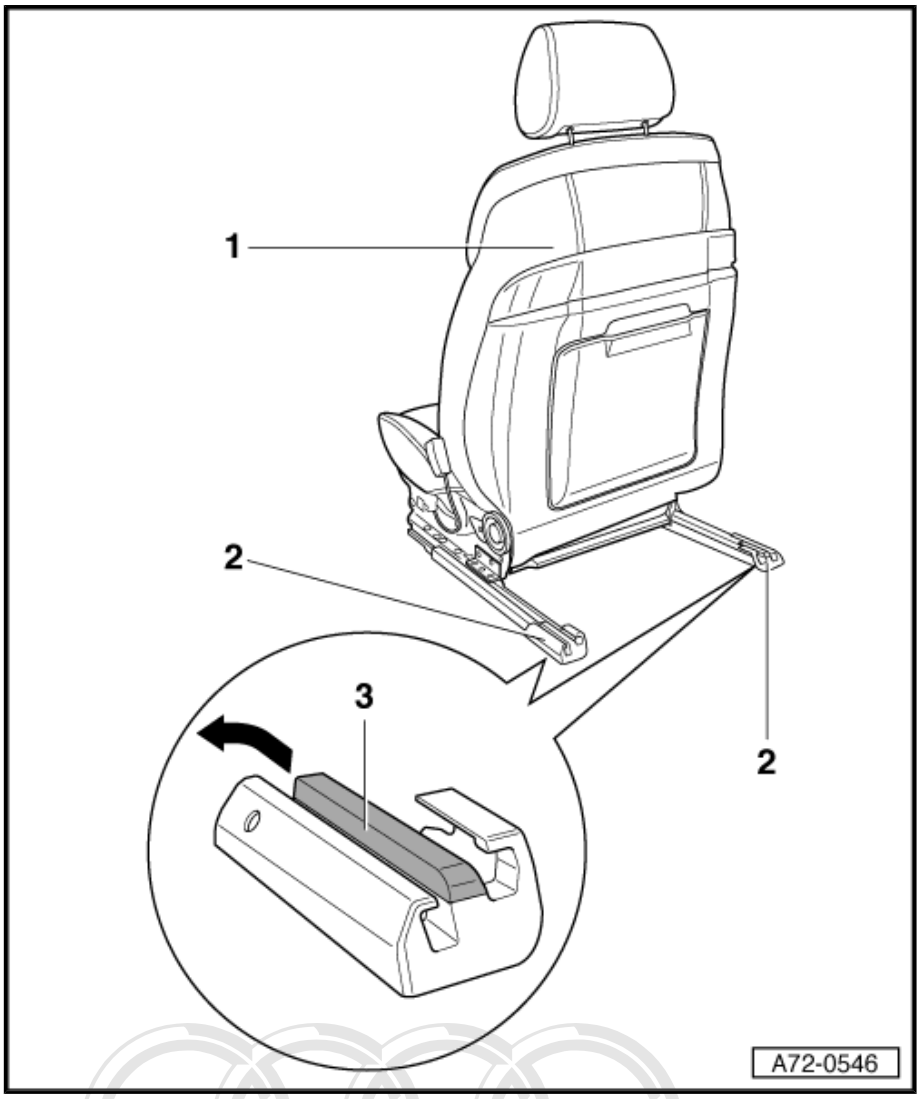

Protected by copyright. Copying for private or commercial purposes, in part or in whole, is not permitted unless authorised by AUDI AG. AUDI AG does not guarantee or accept any liability with respect to the correctness of information in this document. Copyright by AUDI AG.

1.7 Bump stop for front passenger's seat (USA)

1 - Front passenger's seat

2 - Bump stop

- ❑ For USA only
- ❑ Attached on tunnel side for front passenger's seat

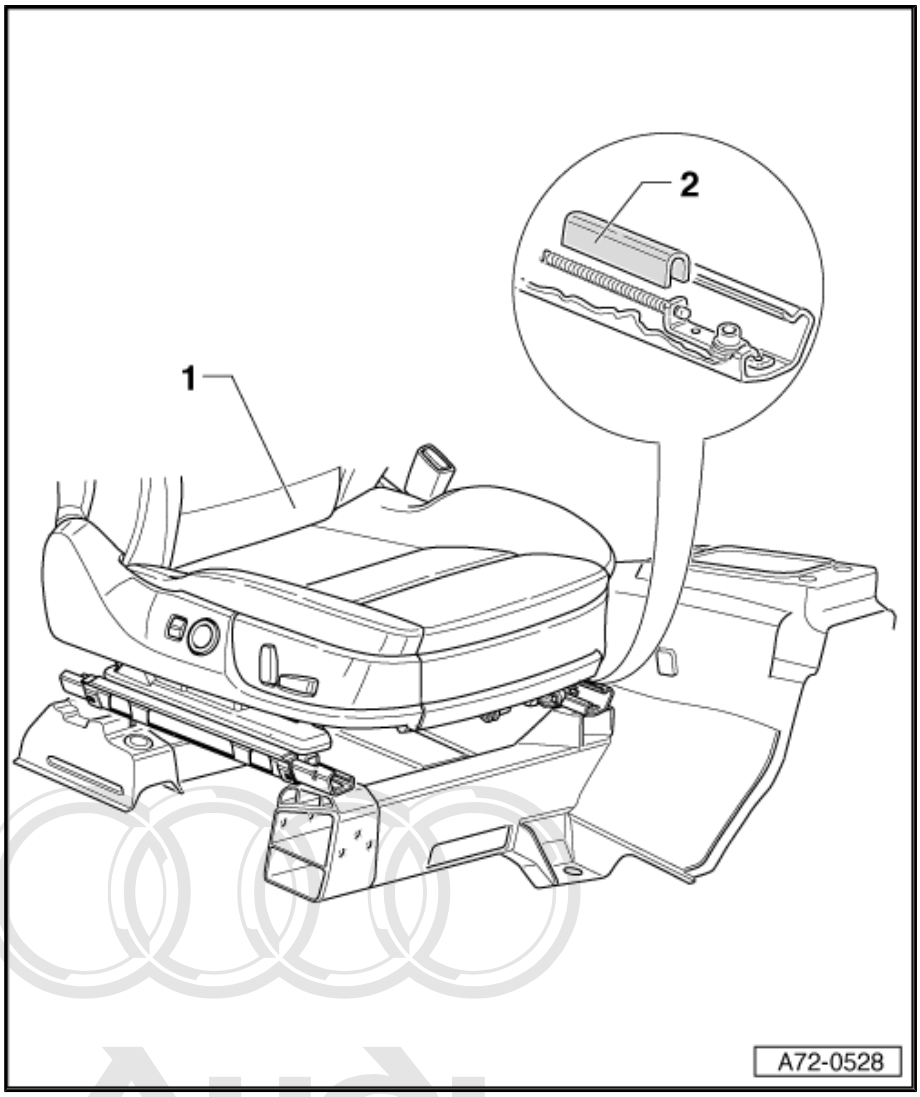

1.8 Removing and installing front seat back-rest

Protected by copyright. Copying for private or commercial purposes, in part or in whole, is not permitted unless authorised by AUDI AG. AUDI AG does not guarantee or accept any liability with respect to the correctness of information in this document. Copyright by AUDI AG.

Special tools and workshop equipment required

- ♦ Torque wrench -V.A.G 1331/-

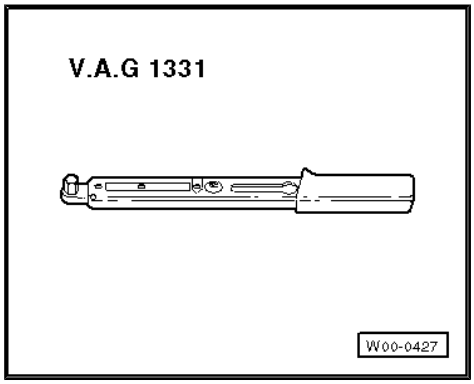

> ⚠ WARNING
>
> *Heed the safety regulations for pyrotechnic components* *⇒ page 94* *.*

1 - Connector

2 - Connector

3 - Side airbag connector

4 - Clip

5 - Connector

6 - Connector

7 - Protective mat

8 - Front seat backrest

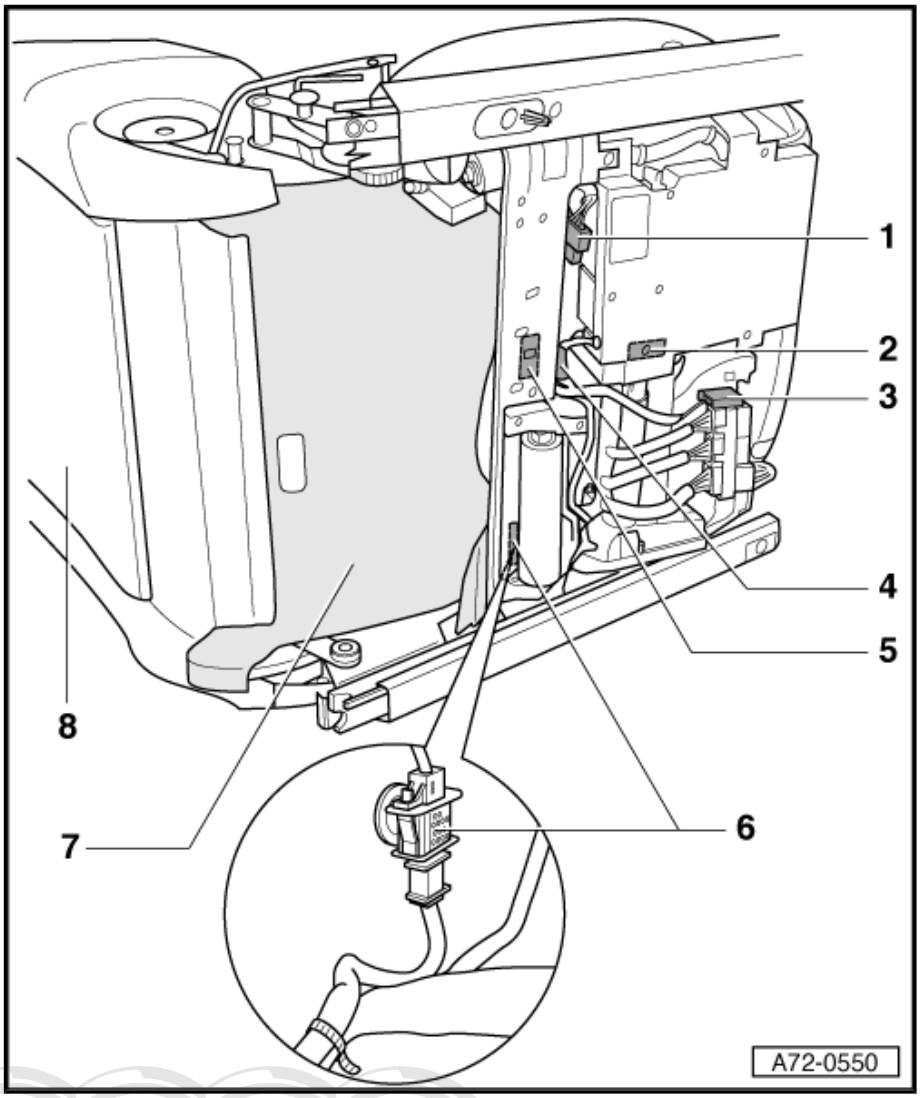

♦ Removing

- Remove the seat ⇒ page 282 .
- Attach the holder for seat repair -VAS 6136- to the engine and gear-box holder -VAS 6095- .
- Attach the front seat to the holder for seat repair -VAS 6136- .
- Remove the side trim on the sill panel side ⇒ page 292 .
- Remove the side trim on the tunnel side ⇒ page 293 .
- Remove the front trim ⇒ page 293 .
- Remove the holder for the seat side trim panels ⇒ page 294 .
- Pull the protective mat -7- aside.
- Unplug the connector -6-.
- Unclip the connector -5- and unplug the connector -5-.
- Unfasten the wiring harness at the clip -4-.
- Unplug the connector -1-.
- Unclip the connector -2- and unplug the connector -2-.
- Unplug the connector -3-.

Protected by copyright. Copying for private or commercial purposes, in part or in whole, is not permitted unless authorised by AUDI AG. AUDI AG does not guarantee or accept any liability with respect to the correctness of information in this document. Copyright by AUDI AG.

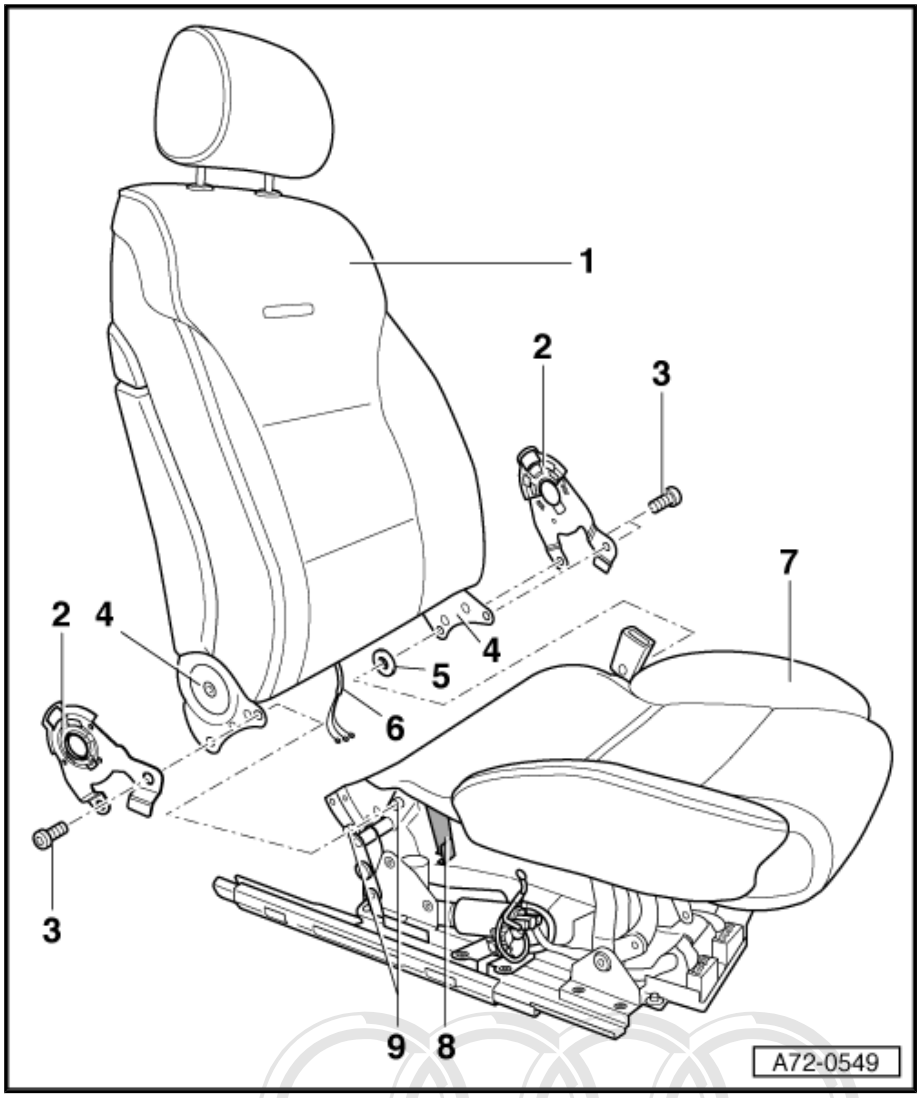

1 - Backrest

- Disengage the fastening strips -8- (2x).
- Unscrew the bolts -3- (4x).
- Detach the fitting trim panels -2- (2x).
- Prise out the backrest fittings -4- (2x) at the guides -9- (4x).
- Tilt the backrest -1- forwards onto the seat.
- Press the padding aside and carefully pull the wiring harness -2- out of the seat pan -8-.
- Detach the backrest -1-.

♦ Installing

- On the tunnel side, position the spacer -5- on the lower guide -9- such that the spacer is flush with the guide -9-.
- Always replace the bolts -3- (4x).
- Re-cut the threads in the backrest frame before inserting the bolts -3- (4x).
- Continue installing the backrest -1- in the reverse order of removal.
- Memory seat: After installing the seat in the vehicle, perform backrest/seat basic setting.

2 - Fitting trim panels (2x)

3 - Bolts (4x)

❑ Tightening torque 34 Nm

4 - Backrest fittings (2x)

5 - Spacer, tunnel side only

6 - Wiring harness

7 - Seat pan

8 - Fastening strips (2x)

9 - Guides (4x)

Protected by copyright. Copying for private or commercial purposes, in part or in whole, is not permitted unless authorised by AUDI AG. AUDI AG does not guarantee or accept any liability with respect to the correctness of information in this document. Copyright by AUDI AG.

1.9 Replacing seat pan

Note

The original seat pan is supplied with a clip and retaining bracket for the seat-occupied sensor for front passenger's airbag deactivation (country-specific). The components must be removed on vehicles with no seat-occupied sensor for front passenger's airbag deactivation (country-specific).

Protected by copyright. Copying for private or commercial purposes, in part or in whole, is not permitted unless authorised by AUDI AG. AUDI AG does not guarantee or accept any liability with respect to the correctness of information in this document. Copyright by AUDI AG.

Note

The seat pan is shown from underneath without further attachments.

– Remove the clip -1-.
– Remove the retaining bracket -2-.

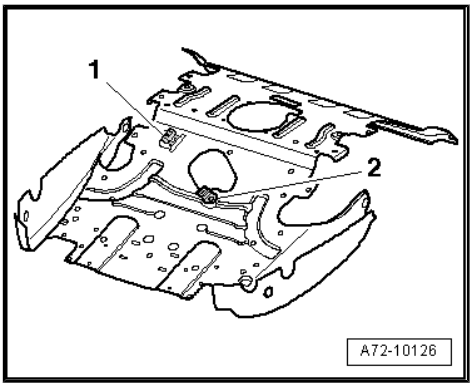

1.10 Removing and installing side trim on sill panel side

1 - Front seat

2 - Front trim

3 - Bolt

4 - Connector

5 - Side trim, sill panel side

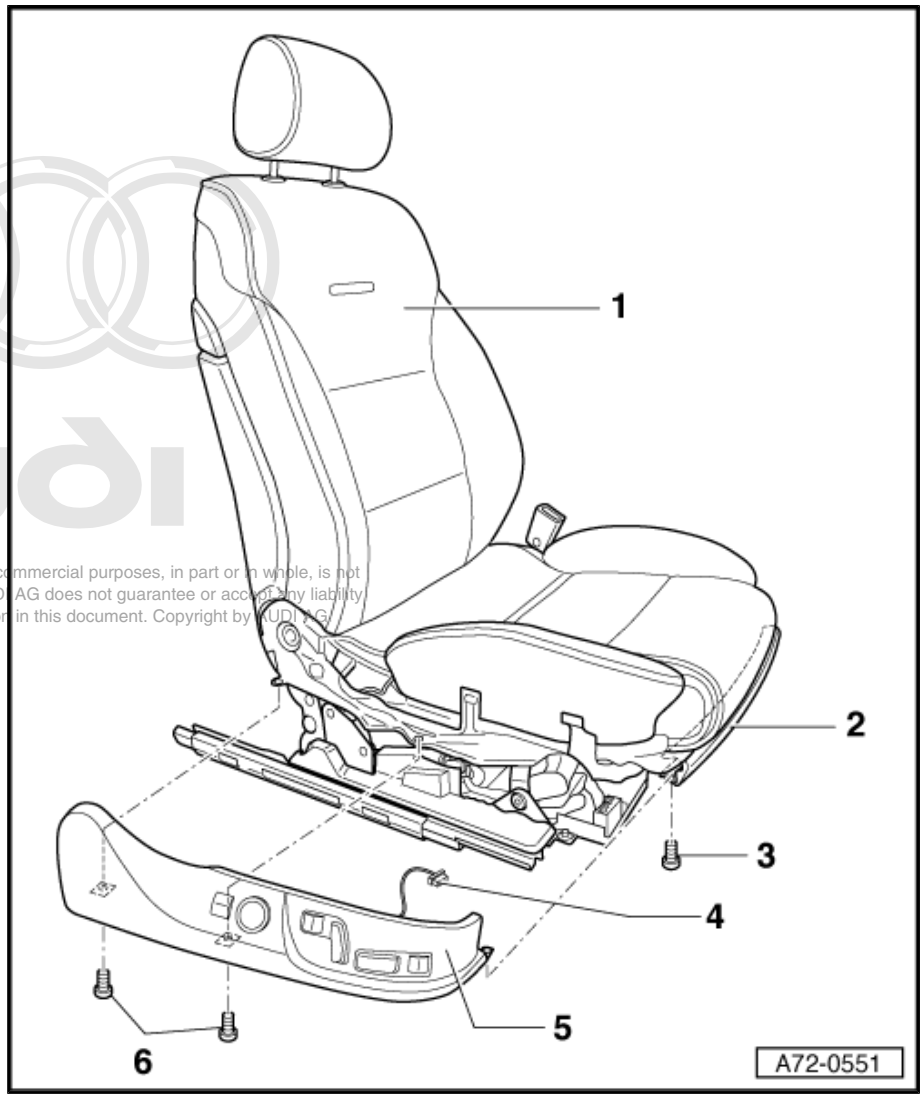

◆ Removing

– Remove the seat ⇒ page 282 .

– Attach the holder for seat repair -VAS 6136- to the engine and gear-box holder -VAS 6095- .

– Attach the front seat to the holder for seat repair -VAS 6136- .

Protected by copyright. Copying for private or commercial purposes, in part or in whole, is not permitted unless authorised by AUDI AG. AUDI AG does not guarantee or accept any liability with respect to the correctness of information in this document. Copyright by AUDI AG.

– Unscrew the bolts -6- (2x).

– Unscrew the bolt -3-.

– Disengage the side trim -5- at the front trim -2-.

– Detach the side trim -5-, starting from the switch side.

– Unplug the connector -4-.

6 - Bolts (2x)

1.11 Removing and installing side trim on tunnel side

1 - Front seat

2 - Side trim, tunnel side

♦ Removing

– Remove the seat ⇒ page 282 .

– Attach the holder for seat repair -VAS 6136- to the engine and gearbox holder -VAS 6095- .

– Attach the front seat to the holder for seat repair -VAS 6136- .

– Unscrew the bolts -3- (2x).

– Unscrew the bolt -4-.

– Disengage the side trim -2- at the front trim -5-.

– Pull off the side trim -2- to the rear.

3 - Bolts (2x)

4 - Bolt

5 - Front trim

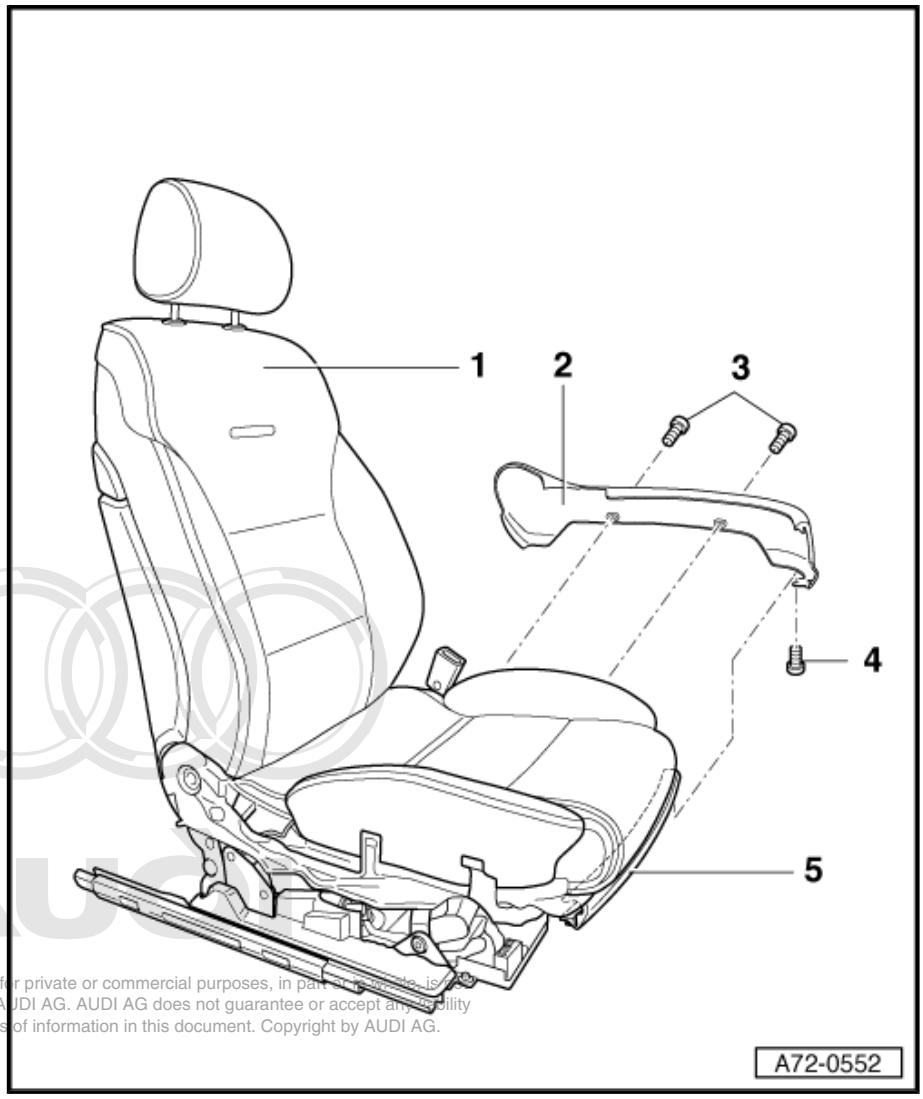

Protected by copyright. Copying for private or commercial purposes, in part or in whole, is not permitted unless authorised by AUDI AG. AUDI AG does not guarantee or accept any liability with respect to the correctness of information in this document. Copyright by AUDI AG.

1.12 Removing and installing front trim

♦ Removing

– Remove the seat ⇒ page 282 .

– Attach the holder for seat repair -VAS 6136- to the engine and gearbox holder -VAS 6095- .

– Attach the front seat to the holder for seat repair -VAS 6136- .

– Unscrew the bolts -2- (3x).
– Detach the trim -1-.

♦ Installing

– Install the trim -1- in the reverse order of removal.

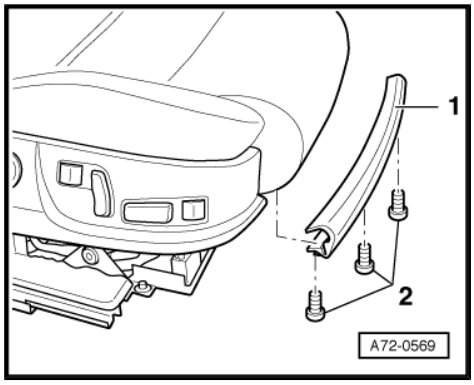

1.13 Removing and installing seat side trim holder

1 - Seat side trim holder

♦ Removing

– Remove the seat ⇒ page 282 .
– Attach the holder for seat repair -VAS 6136- to the engine and gearbox holder -VAS 6095- .
– Attach the front seat to the holder for seat repair -VAS 6136- .
– Remove the seat side trim on the sill panel side ⇒ page 292 .
– Remove the seat side trim on the tunnel side ⇒ page 293 .
– Remove the front trim ⇒ page 293 .
– Unscrew the nuts -2- (2x).
– Take out the bolts -3- (2x).
– Unscrew the bolts -5- (2x).
– Use a screwdriver to press in the tab -4- and disengage the holder -1- in arrow direction.
– Unfasten the holder -1- on the other side in the same manner and detach the holder -1-.

♦ Installing

– Install the seat side trim holder -1- in the reverse order of removal.

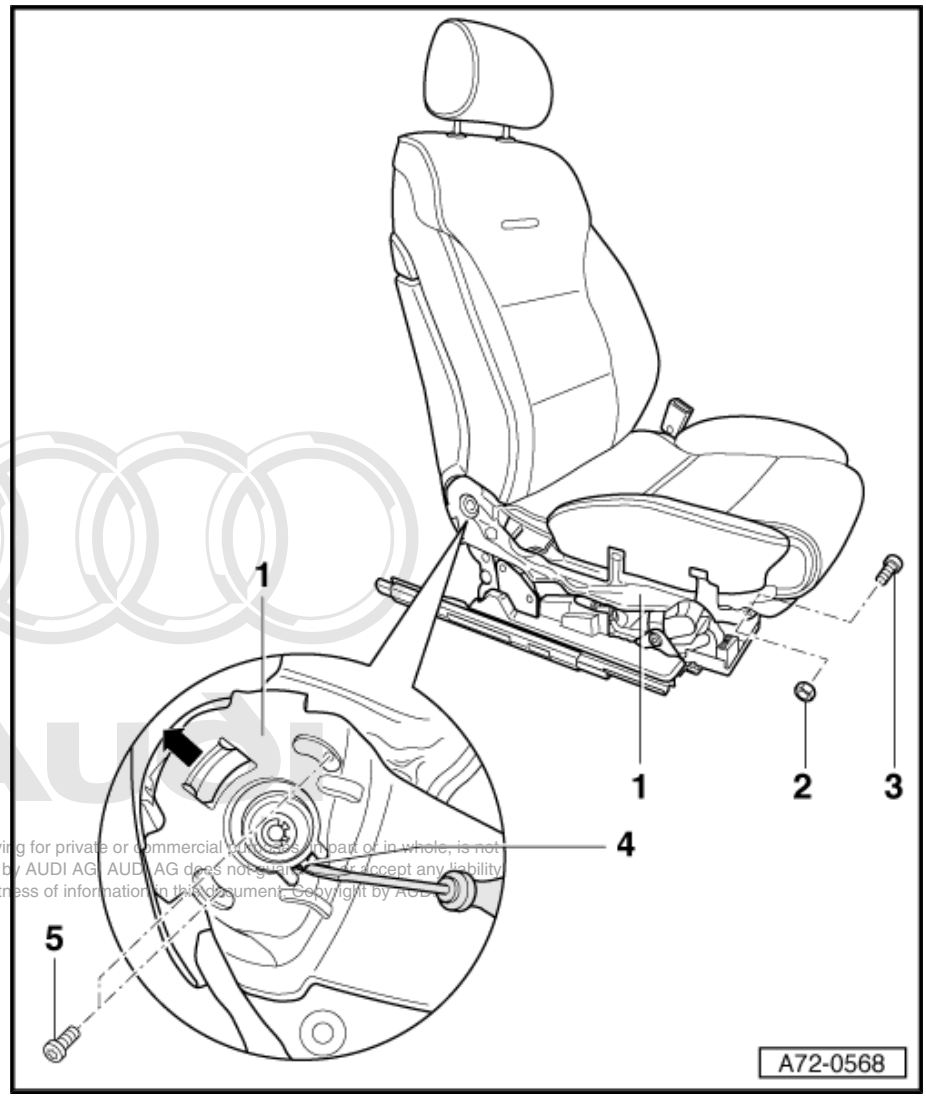

Protected by copyright. Copying for private or commercial purposes, in part or in whole, is not permitted unless authorised by AUDI AG. AUDI AG does not guarantee or accept any liability with respect to the correctness of information in this document. Copyright by AUDI AG.

2 - Nuts (2x)

3 - Bolts (2x)

4 - Tabs (2x)

5 - Bolts (4x)

1.14 Removing and installing seat adjustment switch

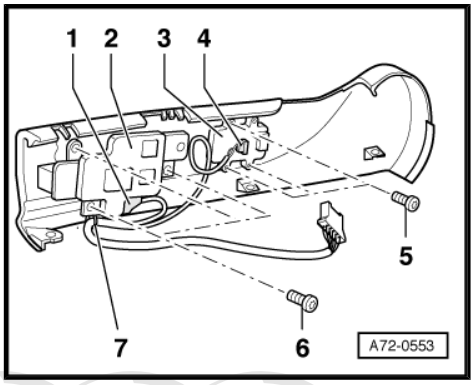

- Remove the seat ⇒ page 282 .
- Attach the holder for seat repair -VAS 6136- to the engine and gearbox holder -VAS 6095- .
- Attach the front seat to the holder for seat repair -VAS 6136- .
- Remove the seat side trim on the sill panel side ⇒ page 292 .
- Detach the seat adjustment switch controls.
- Unfasten the cable tie -7-.
- Unplug the connector -1-.
- Unscrew the bolts -6- (3x).
- ♦ Tightening torque 1.5 Nm
- Detach the seat adjustment switch -2-.

1.15 Removing and installing switch for 4-way lumbar support

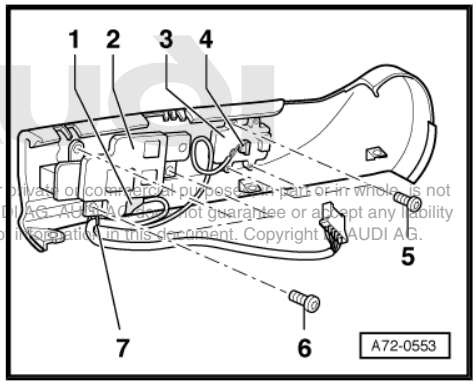

- Remove the seat ⇒ page 282 .
- Attach the holder for seat repair -VAS 6136- to the engine and gearbox holder -VAS 6095- .
- Attach the front seat to the holder for seat repair -VAS 6136- .
- Remove the seat side trim on the sill panel side ⇒ page 292 .
- Unplug the connector -4-.
- Unscrew the bolts -5- (3x).
- ♦ Tightening torque 0.4 Nm.
- Detach the 4-way lumbar support switch -3-.

Protected by copyright. Copying for private or commercial purposes, in part or in whole, is not permitted unless authorised by AUDI AG. AUDI AG does not guarantee or accept any liability with respect to the correctness of information in this document. Copyright by AUDI AG.

1.16 Removing and installing seat and steering column adjustment control unit with memory -J136- / front passenger seat adjustment with memory control unit -J521-

Note

- ♦ *If possible: Move the seat upwards and to the rear as far as it will go.*
- ♦ *For emergency power supply for the seat longitudinal and seat height adjustment motors ⇒ refer to Page ⇒ page 285 .*

1 - Front seat

2 - Connectors (2x)

3 - Nuts (3x)

4 - Connector

5 - Securing clips (2x)

6 - Control unit

♦ Removing

– Unplug the connector -4-.
– Unfasten the wiring harness on the left and right at the securing clips -5- (2x).
– On the inside of the control unit -6- unscrew the nuts -3- (3x).
– On the front of the control unit -6- unplug the connectors -2- (2x).
– Lift out the control unit -6- until the connectors -7- (2x) are accessible.
– Unfasten the securing clips (2x) and unplug the connectors -7- (2x).

♦ Installing

– Install the control unit -6- in the reverse order of removal.

7 - Connectors (2x)

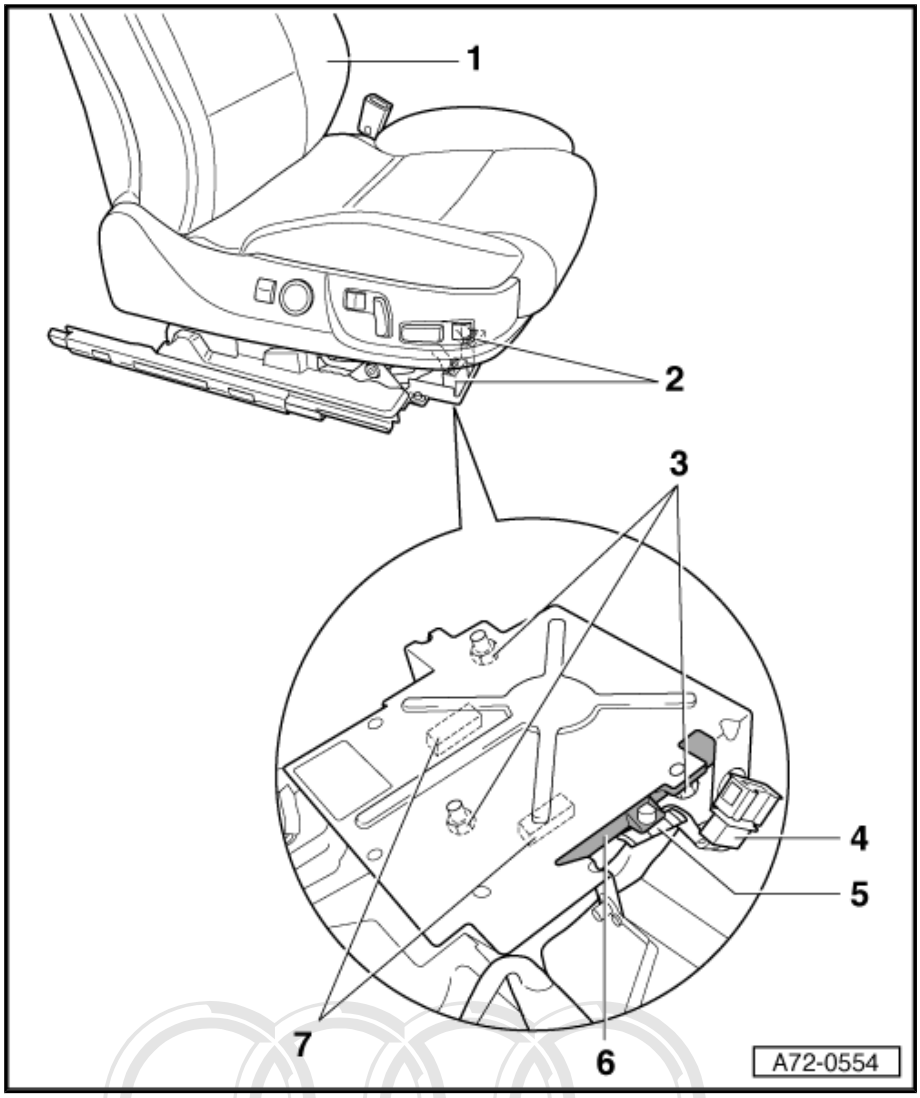

1.17 Removing and installing connector point

♦ Removing

– Unscrew the bolts -2- (2x).

– Detach the connector point -1-.

♦ Installing

– Install the connector point -1- in the reverse order of removal.

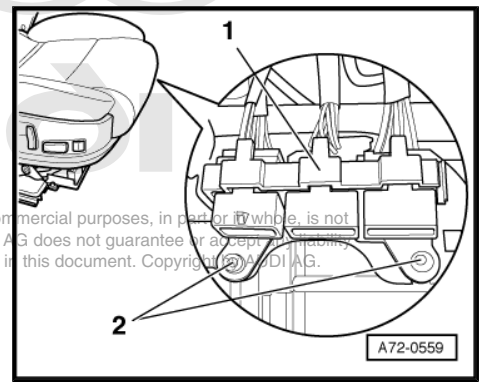

Protected by copyright. Copying for private or commercial purposes, in part or in whole, is not permitted unless authorised by AUDI AG. AUDI AG does not guarantee or accept any liability with respect to the correctness of information in this document. Copyright © AUDI AG.

1.18 Removing and installing seat longitudinal adjustment motor

Special tools and workshop equipment required

- Torque wrench -V.A.G 1331/-

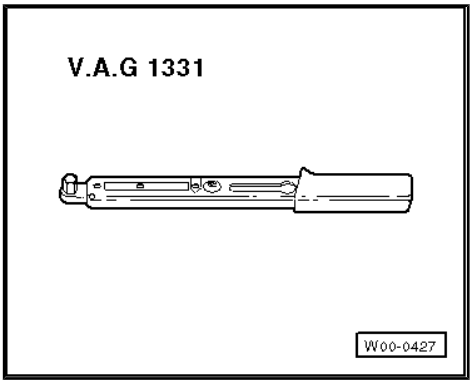

1.18.1 Removing seat with defective longitudinal adjustment motor

Note

- *If possible: Move the seat upwards.*
- *To remove the driver's seat: Move the steering wheel to the front and upwards as far as it will go.*

Protected by copyright. Copying for private or commercial purposes, in part or in whole, is not permitted unless authorised by AUDI AG. AUDI AG does not guarantee or accept any liability with respect to the correctness of information in this document. Copyright by AUDI AG.

1 - Front seat

- Removing
  - Detach the trim -12-.
  - Unscrew the bolts -13- (4x).
  - Fold the seat -1- forwards.
  - Unscrew the bolts -14- (2x).
  - Unscrew the bolt -6-.
  - Unclip the connector -5- from the retainer -4-.
  - Unclip the connector -11- from the retainer -4-.
  - Unfasten the wiring harness -9- at the clips -10- and -7-.
  - Unplug the connector -8- at the seat longitudinal adjustment motor.
  - Take the backrest with seat pan out of the vehicle with the assistance of a second mechanic.
- Installing

WARNING

Ensure correct operation of the safety latch *⇒ page 301* *.*

  - Install the front seat -1- in the reverse order of removal.

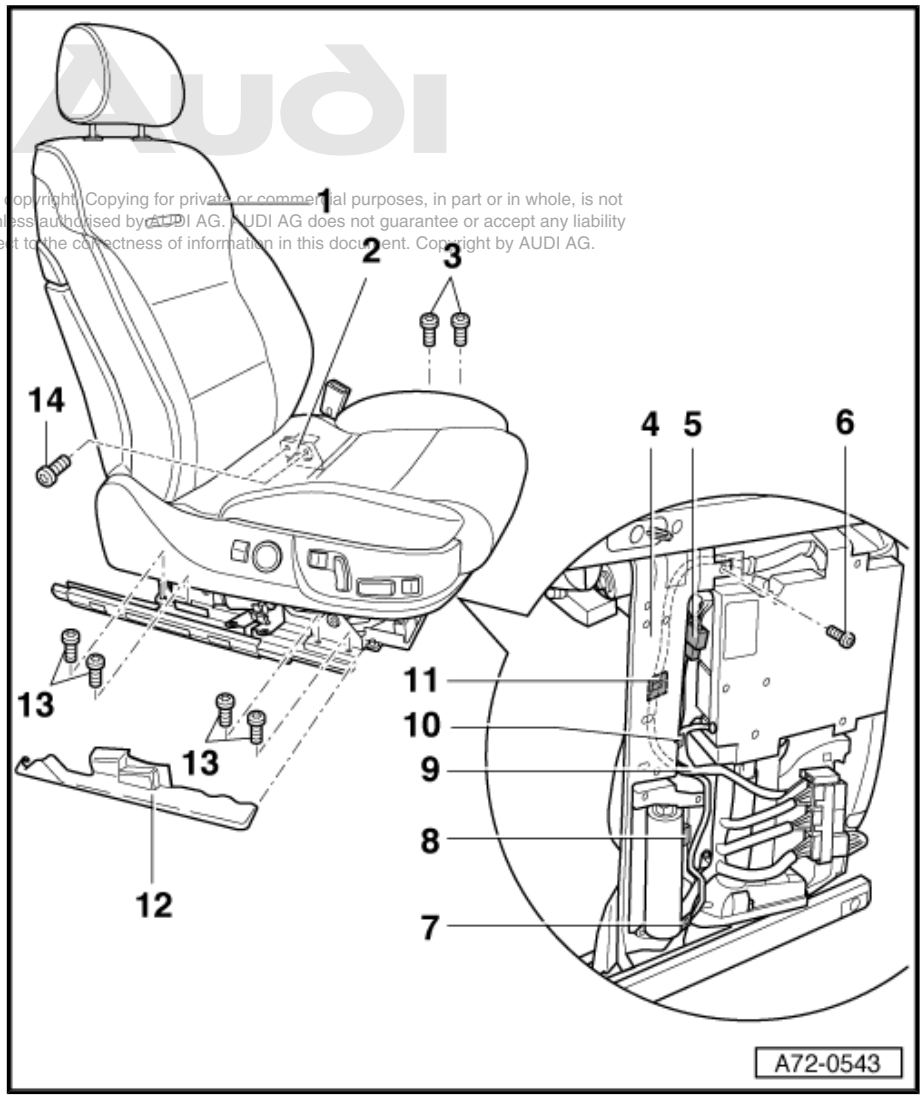

2 - Safety latch

3 - Bolts (2x)
- ❑ Tightening torque 20 Nm.

4 - Retainer for seat longitudinal adjustment motor

5 - Connector

6 - Bolt

7 - Clip

8 - Connector for seat longitudinal adjustment motor

9 - Wiring harness

10 - Clip

11 - Connector

12 - Trim

13 - Bolts (4x)
- ❑ Tightening torque 20 Nm

14 - Bolts (2x)
- ❑ Tightening torque 19 Nm

Protected by copyright. Copying for private or commercial purposes, in part or in whole, is not permitted unless authorised by AUDI AG. AUDI AG does not guarantee or accept any liability with respect to the correctness of information in this document. Copyright by AUDI AG.

1.18.2 Removing and installing seat base frame with longitudinal adjustment motor

1 - Shaft

2 - Bolts (2x)

3 - Retainer plate for safety latch

4 - Bolts (2x)

❑ Tightening torque 20 Nm

5 - Motor

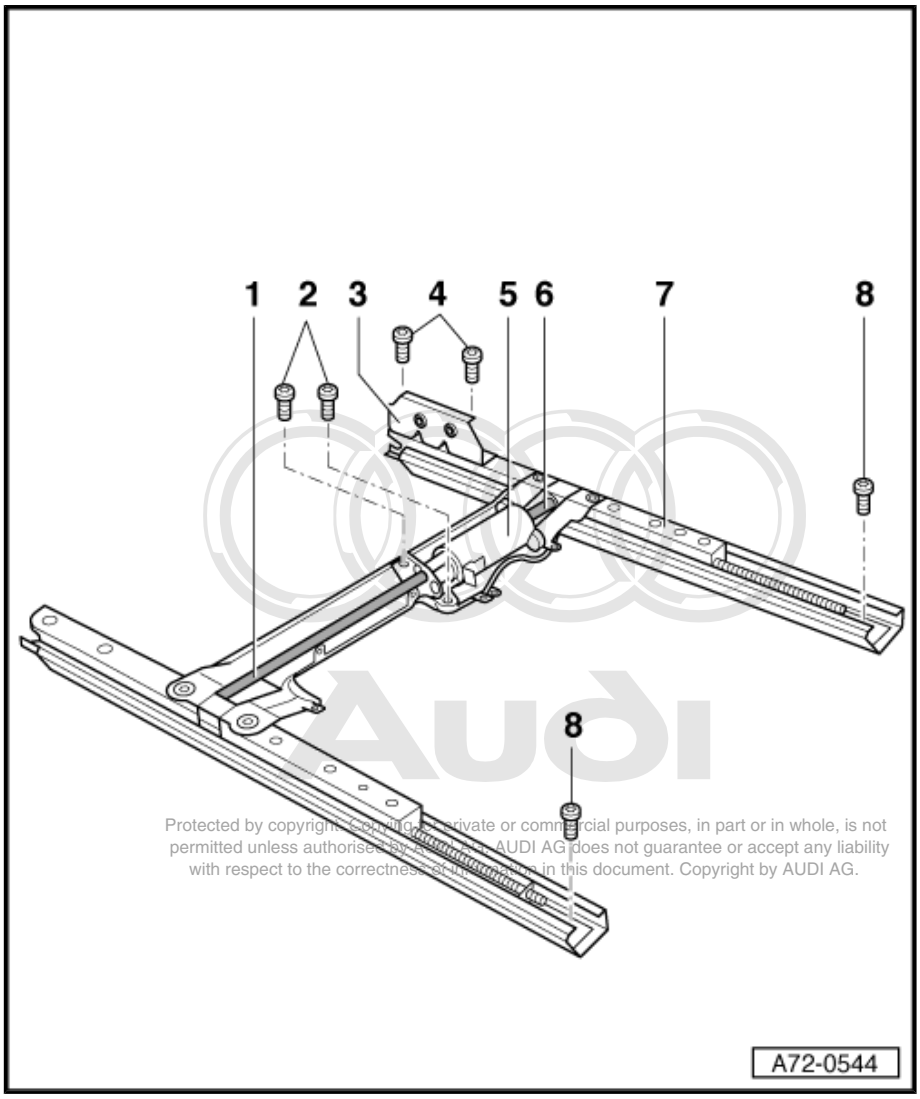

Protected by copyright. Copying for private or commercial purposes, in part or in whole, is not permitted unless authorised by AUDI AG. AUDI AG does not guarantee or accept any liability with respect to the correctness of information in this document. Copyright by AUDI AG.

♦ Removing

- Removing seat with defective longitudinal adjustment motor ⇒ page 297 .
- Unscrew the bolts -4- (2x).
- Detach the retainer plate for the safety latch -3-.
- Unscrew the bolts -8- (2x).
- Unscrew the bolts -2- (2x).
- Disengage the seat longitudinal adjustment motor -5- from the shafts -1- and -6-.
- Move both runners with a power screwdriver and a long shaft until the concealed bolts -8- (2x) become visible.
- Unscrew the bolts -8- (2x).
- Replace the seat base frame with longitudinal adjustment motor -7-.

♦ Installing

> ⚠ **WARNING**
>
> *Ensure correct operation of the safety latch* *⇒ page 301* *.*

- Install the seat base frame with longitudinal adjustment motor -7- in the reverse order of removal.

6 - Shaft

7 - Seat base frame with longitudinal adjustment motor

8 - Bolts (4x)

❑ Tightening torque 40 Nm.

1.19 Replacing seat upper frame

Special tools and workshop equipment required

♦ Torque wrench -V.A.G 1331/-

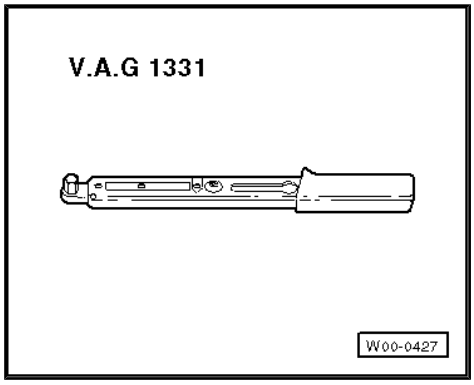

1 - Rivets (4x)

2 - Bolts (8x)

❑ Tightening torque 20 Nm

3 - Seat pan

4 - Lower seat pan frame

5 - Upper frame of seat pan with seat height adjustment motor

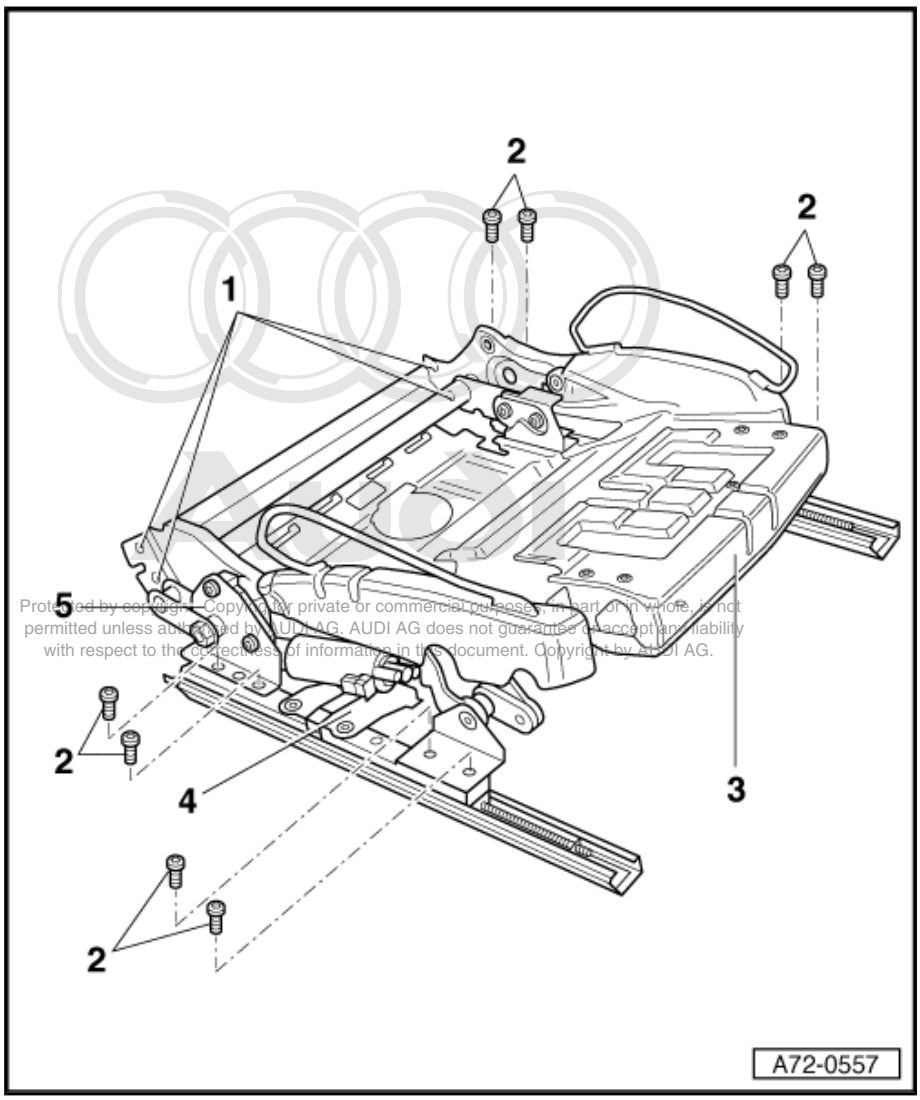

Protected by copyright. Copying for private or commercial purposes, in part or in whole, is not permitted unless authorised by AUDI AG. AUDI AG does not guarantee or accept any liability with respect to the correctness of information in this document. Copyright by AUDI AG.

♦ Removing

- Remove the seat ⇒ page 282 .
- Attach the holder for seat repair -VAS 6136- to the engine and gear-box holder -VAS 6095- .
- Attach the front seat to the holder for seat repair -VAS 6136- .
- Remove the side trim on the sill panel side ⇒ page 292 .
- Remove the side trim on the tunnel side ⇒ page 293 .
- Remove the front trim ⇒ page 293 .
- Remove the holder for the seat side trim panels ⇒ page 294 .
- Remove the backrest ⇒ page 288 .
- Remove the seat pan cover and padding ⇒ page 360 .
- Remove the control unit ⇒ page 295 .
- Remove the connector point ⇒ page 296 .
- Remove the belt buckle ⇒ page 116 .
- Drill out the rivets -1- (4x).
- Unscrew the bolts -2- (8x).
- Unfasten the wiring harness and unplug the connectors from the seat pan and motors.
- Replace the upper frame of the seat pan -5-.

♦ Installing

- Install the upper frame of the seat pan -5- in the reverse order of removal.

1.20 Replacing seat pan

Note

The original seat pan is supplied with a clip and retaining bracket for the seat-occupied sensor for front passenger's airbag deactivation (country-specific). The components must be removed on vehicles with no seat-occupied sensor for front passenger's airbag deactivation (country-specific).

Protected by copyright. Copying for private or commercial purposes, in part or in whole, is not permitted unless authorised by AUDI AG. AUDI AG does not guarantee or accept any liability with respect to the correctness of information in this document. Copyright by AUDI AG.

Note

The seat pan is shown from underneath without further attachments.

– Remove the clip -1-.

– Remove the retaining bracket -2-.

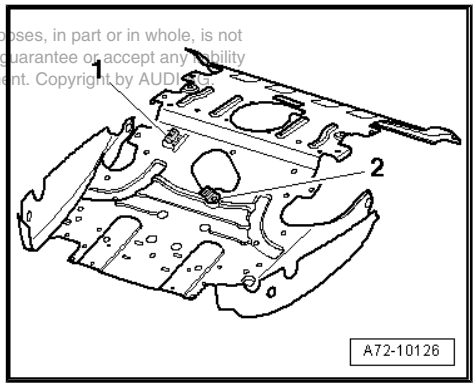

1.21 Removing and installing safety latch

Special tools and workshop equipment required

♦ Torque wrench -V.A.G 1331/-

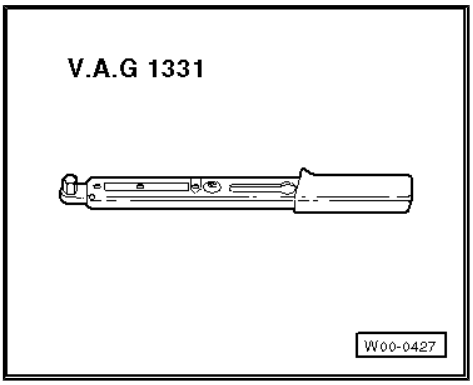

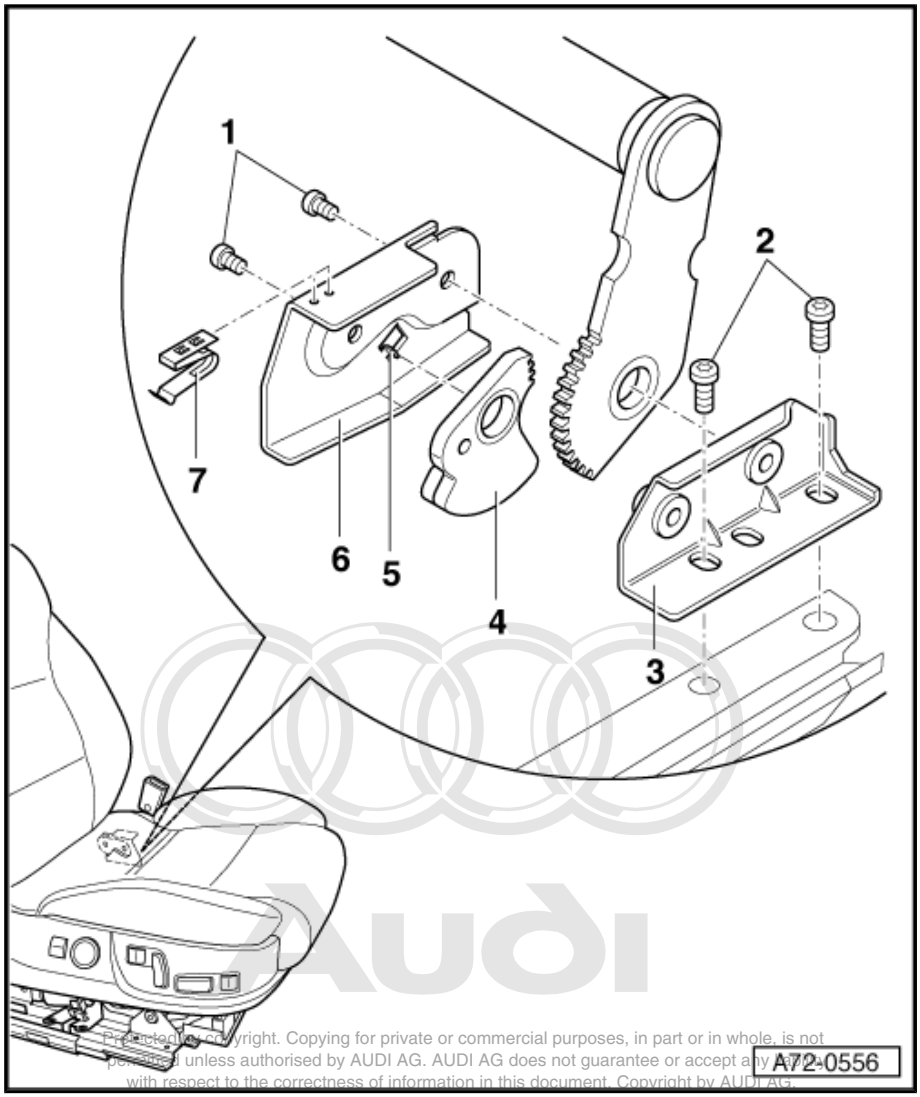

Protected by copyright. Copying for private or commercial purposes, in part or in whole, is not permitted unless authorised by AUDI AG. AUDI AG does not guarantee or accept any liability with respect to the correctness of information in this document. Copyright by AUDI AG.

1 - Bolts (2x)

- ❑ Tightening torque 19 Nm.

2 - Bolts (2x)

- ❑ Tightening torque 20 Nm.

3 - Mounting plate

4 - Latch

- ♦ Removing
  - – Remove the seat ⇒ page 282 .
  - – Attach the holder for seat repair -VAS 6136- to the engine and gearbox holder -VAS 6095- .
  - – Attach the front seat to the holder for seat repair -VAS 6136- .
  - – Unscrew the bolts -1- (2x).
  - – Detach the mounting plate -6- and the latch -4-.
  - – For complete removal: Unscrew the bolts -2- (2x) and detach the mounting plate -3-.
- ♦ Installing
  - – Following complete removal: Screw on the mounting plate -3- with the bolts -2- (2x).
  - – Make sure the spring -7- is inserted in the mounting plate -6-.
  - – Insert the latch -4- flush with the stop -5- and the spring -7-.
  - – Screw on the mounting plate -6- and the latch -4- with the bolts -1- (2x).

5 - Stop

6 - Mounting plate

7 - Spring

1.22 Removing and installing seat height adjustment motor

Special tools and workshop equipment required

♦ Torque wrench -V.A.G 1331/-

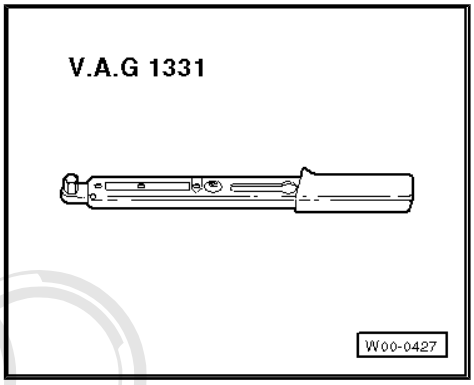

1 - Bolt
- ❑ 2x
- ❑ 20 Nm

2 - Bolt
- ❑ 2x
- ❑ 18 Nm

3 - Stepped pin
- ❑ 25 Nm

4 - Nut
- ❑ 25 Nm

5 - Seat height adjustment motor

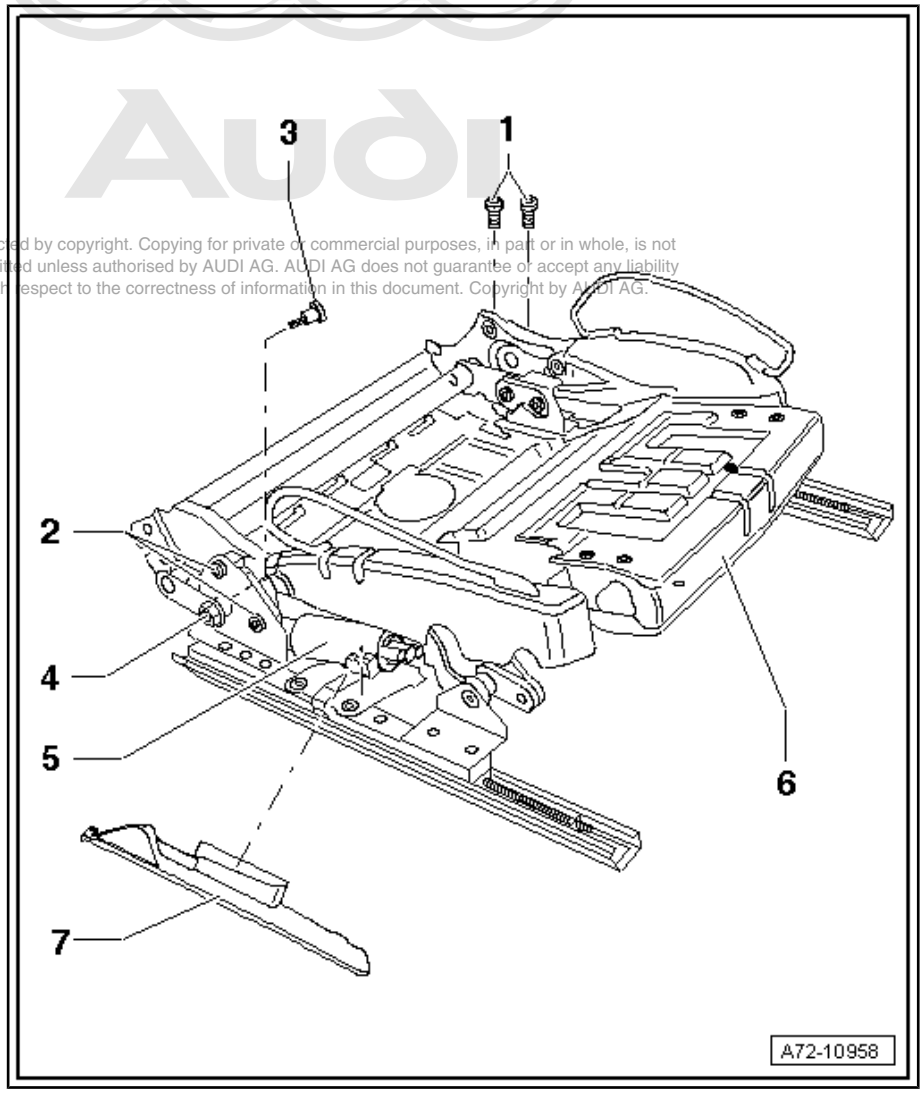

Protected by copyright. Copying for private or commercial purposes, in part or in whole, is not permitted unless authorised by AUDI AG. AUDI AG does not guarantee or accept any liability with respect to the correctness of information in this document. Copyright by AUDI AG.

♦ Removing

- Remove the seat ⇒ page 282 .
- Attach the holder for seat repair -VAS 6136- to the engine and gearbox holder -VAS 6095- .
- Attach the front seat to the holder for seat repair -VAS 6136- .
- Remove the side trim on the sill panel side ⇒ page 292 .
- Remove the side trim on the tunnel side ⇒ page 293 .
- Remove the cover -7-.
- Unscrew the bolts -1- (2x) for attaching the seat upper frame to the seat base frame.
- Unscrew the bolts -2- (2x).
- Screw out the stepped pin -3- and detach the nut -4-.
- Fold up the seat upper frame -6- at the front.

WARNING

Risk of injury if the seat upper frame tips back. Secure the seat upper frame to stop it tipping back.

– Unplug the connector at the seat height adjustment motor and detach the seat height adjustment motor.

♦ Installing ⇒ page 304

– Position the motor -1- with the pins -A- (2x) in the corresponding mount.

– Screw on the motor.

– Swivel down the seat upper frame and guide the toothed segment -3- into the seat height adjustment motor.

> **Caution**
>
> *Take care never to damage the mounting bush when inserting the nut and the stepped pin -2-.*

– Insert the nut.

– Screw on the stepped pin.

– Tighten the bolts for attaching the seat upper frame to the seat base frame.

– Perform the remaining operations.

6 - Seat upper frame

7 - Cover

Replacing motor

Tightening torque: ⇒ page 302

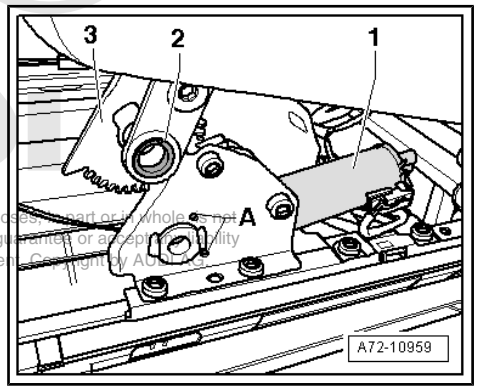

Protected by copyright. Copying for private or commercial purposes, in part or in whole, is not permitted unless authorised by AUDI AG. AUDI AG does not guarantee or accept any liability with respect to the correctness of information in this document. Copyright by AUDI AG.

1.23 Removing and installing seat angle adjustment motor

Special tools and workshop equipment required

♦ Torque wrench -V.A.G 1410/-

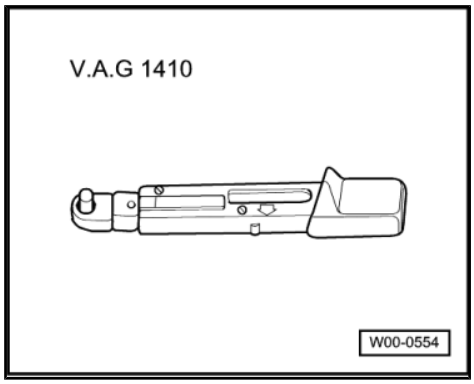

1 - Bolts (2x)

- ❑ Tightening torque 5 Nm

2 - Bolts (3x)

- ❑ Tightening torque 10 Nm

3 - Connector

4 - Seat angle adjustment motor

♦ Removing

- – Remove the seat ⇒ page 282 .
- – Attach the holder for seat repair -VAS 6136- to the engine and gearbox holder -VAS 6095- .
- – Attach the front seat to the holder for seat repair -VAS 6136- .
- – Remove the connector point ⇒ page 296 .
- – Unplug the connector -3-.
- – Unscrew the bolts -2- (3x).
- – Unscrew the bolts -1- (2x).
- – Take out the seat angle adjustment motor -4-.

♦ Installing

- – Install in reverse order.

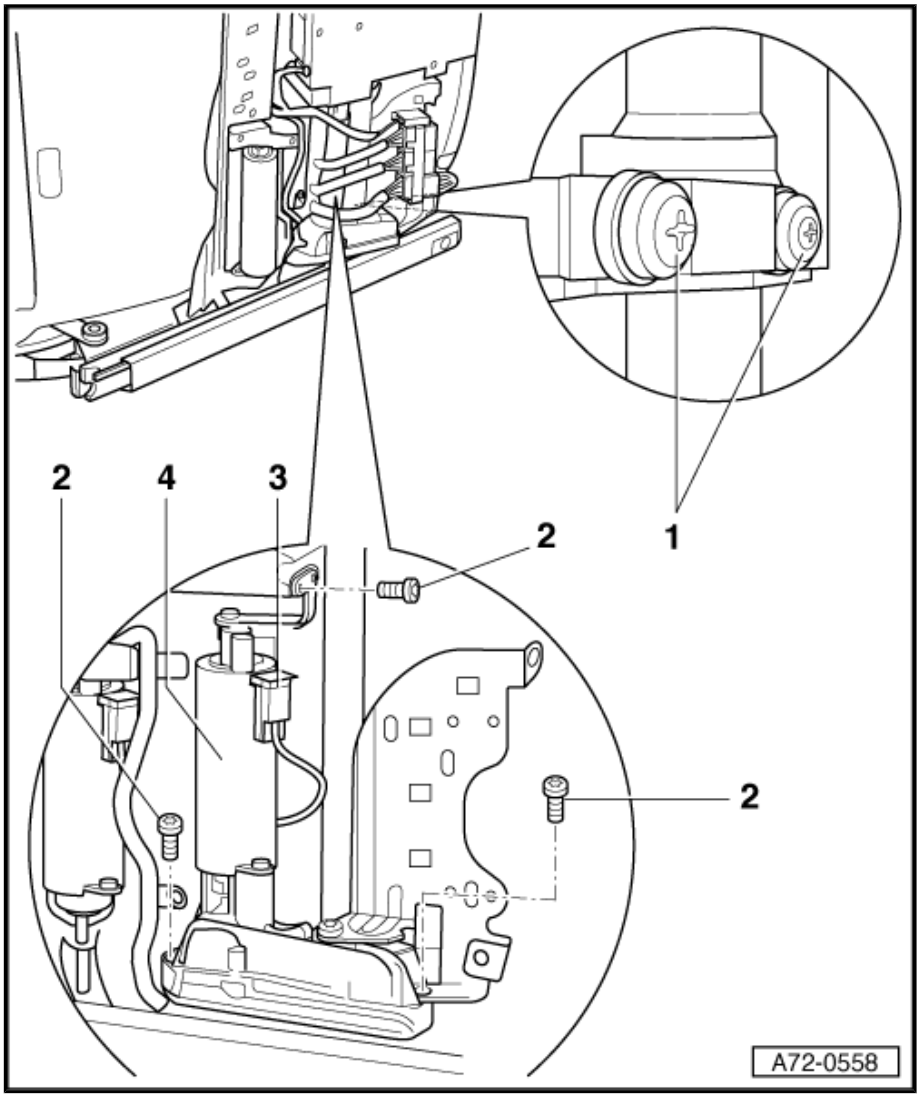

1.24 Removing and installing seat cushion extension motor

Note

If the motor is defective, the seat pan -3- must be replaced.

Protected by copyright. Copying for private or commercial purposes, in part or in whole, is not permitted unless authorised by AUDI AG. AUDI AG does not guarantee or accept any liability with respect to the correctness of information in this document. Copyright by AUDI AG.

1 - Rivets (4x)

2 - Bolts (8x)

3 - Seat pan with seat cushion extension motor

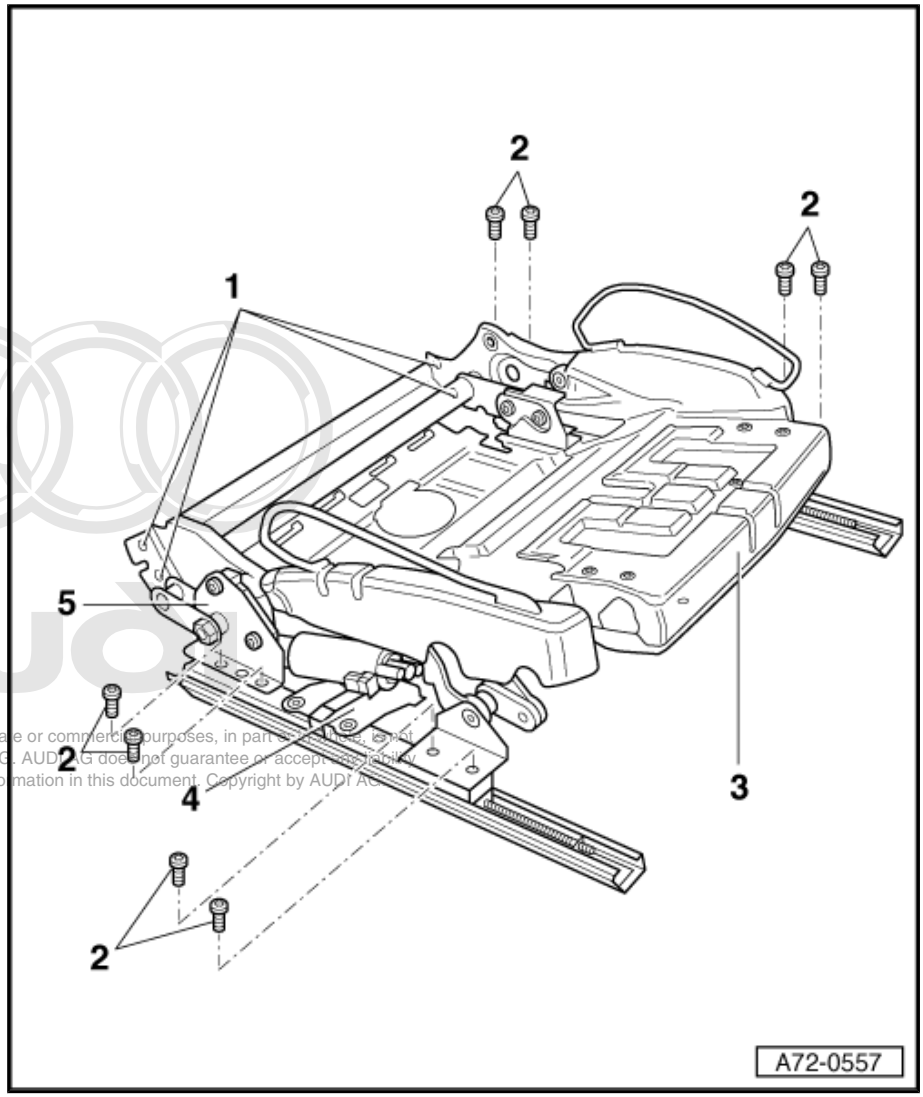

- ♦ Removing
  - – Remove the seat ⇒ page 282 .
  - – Attach the holder for seat repair -VAS 6136- to the engine and gearbox holder -VAS 6095- .
  - – Attach the front seat to the holder for seat repair -VAS 6136- .
  - – Remove the side trim on the sill panel side ⇒ page 292 .
  - – Remove the side trim on the tunnel side ⇒ page 293 .
  - – Remove the front trim ⇒ page 293 .
  - – Remove the holder for the seat side trim panels ⇒ page 294 .
  - – Remove the backrest ⇒ page 288 .
  - – Remove the seat pan cover and padding ⇒ page 360 .
  - – Remove the belt buckle ⇒ page 116 .
  - – Unfasten the wiring harness and unplug the connectors from the seat pan and the seat cushion extension motor.
  - – Drill out the rivets -1- (4x).
  - – Replace the seat pan with seat cushion extension motor -3-.
- ♦ Installing
  - – Install in reverse order.

Protected by copyright. Copying for private or commercial purposes, in part or in whole, is not permitted unless authorised by AUDI AG. AUDI AG does not guarantee or accept any liability with respect to the correctness of information in this document. Copyright by AUDI AG.

4 - Lower seat pan frame

5 - Upper seat pan frame

1.25 Removing and installing backrest adjustment motor

♦ Removing

– Remove the seat ⇒ page 282 .

– Attach the holder for seat repair -VAS 6136- to the engine and gearbox holder -VAS 6095- .

– Attach the front seat to the holder for seat repair -VAS 6136- .

– Remove the side trim on the sill panel side ⇒ page 292 .

– Remove the side trim on the tunnel side ⇒ page 293 .

– Remove the front trim ⇒ page 293 .

– Remove the holder for the seat side trim panels ⇒ page 294 .

– Remove the upper backrest cover panel ⇒ page 309 .

– Remove the lower backrest cover panel ⇒ page 310 .

– Slacken off the bolt of the backrest adjustment motor ⇒ page 308

– Use a screwdriver to prise off the lock washer -5- on the backrest motor side (detail view -B-).

– Use a hammer and punch to knock the shaft -4- through the side of the backrest frame.

– Pull the shaft -4- out of the backrest frame -1- until the backrest adjustment motor is released.

♦ Installing

– Align the splines of the new backrest adjustment motor ⇒ page 309

– Slide the shaft -4- through the backrest adjustment motor and the backrest frame -1-.

– Move the seat aside.

– On the opposite side of the backrest adjustment motor, place a wooden block -2- beneath the shaft -4- (detail view -A-).

– Use an 11 mm socket attachment to knock the spring lock washer -5- onto the shaft -4- (detail view -C-).

– Screw on the bolt at the backrest adjustment motor and plug in the connector.

Protected by copyright. Copying for private or commercial purposes, in part or in whole, is not permitted unless authorised by AUDI AG. AUDI AG does not guarantee or accept any liability with respect to the correctness of information in this document. Copyright by AUDI AG.

– Memory seat: After installing the seat, perform backrest/seat basic setting.

1 - Backrest frame
2 - Wooden block
3 - 11 mm socket attachment
4 - Shaft
5 - Spring lock washer

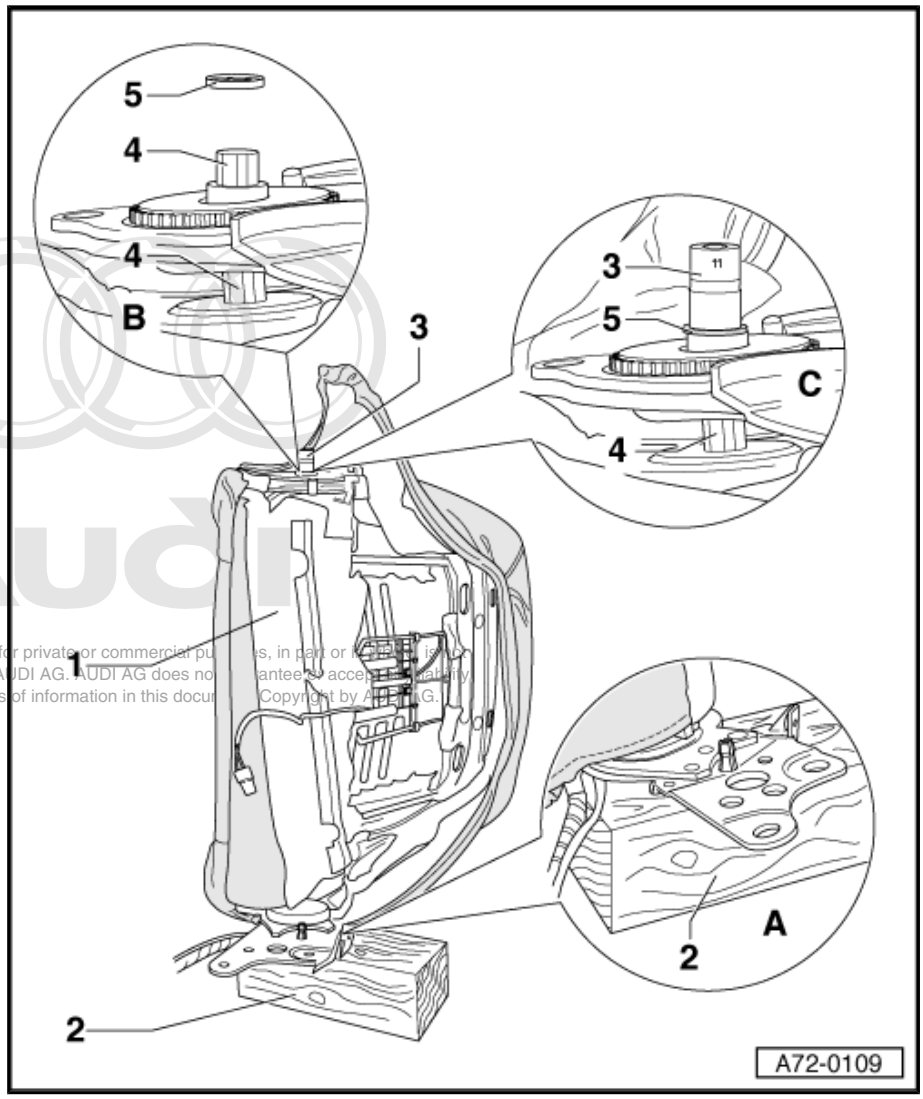

Protected by copyright. Copying for private or commercial purposes, in part or entirely, is not permitted unless authorised by AUDI AG. AUDI AG does not guarantee or accept any liability with respect to the correctness of information in this document. Copyright by AUDI AG.

Releasing backrest adjustment motor

– Unplug the connector -5-.
– Pull aside the cover -3- and the anti-squeak pad -2-.
– Unscrew the bolt -4-.

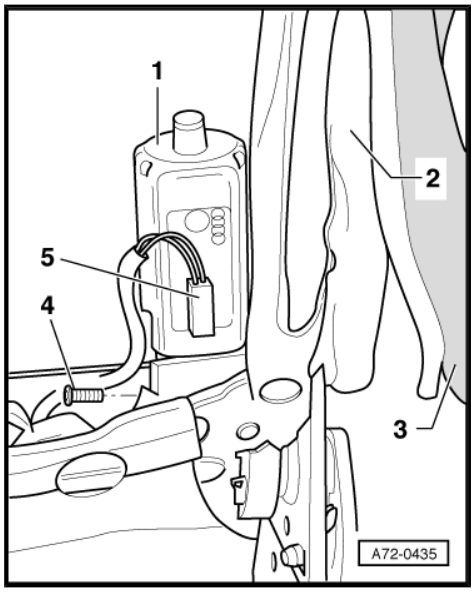

Backrest adjustment motor preliminary steps

– Use a screwdriver to align the locking pin of the splines -1- with the shaft of the backrest frame.

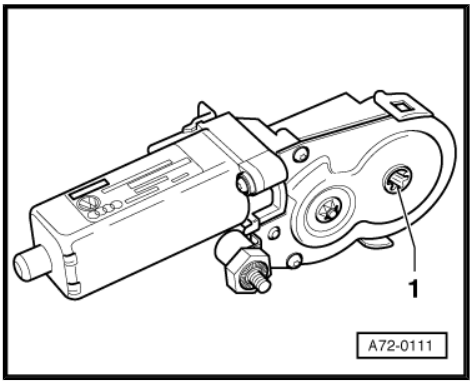

1.26 Removing and installing upper backrest cover panel

1 - Upper backrest cover panel

♦ Removing

– Move the upper backrest forwards as far as it will go.
– Unfasten the clips -2- (4x): Insert a flat screwdriver in the clip and turn it clockwise until the clip is released.
– Disengage the backrest cover panel -1- upwards from the holders -3- (2x).

♦ Installing

– Install the upper backrest cover panel -1- in the reverse order of removal.

2 - Clips (4x)

3 - Holder (2x)

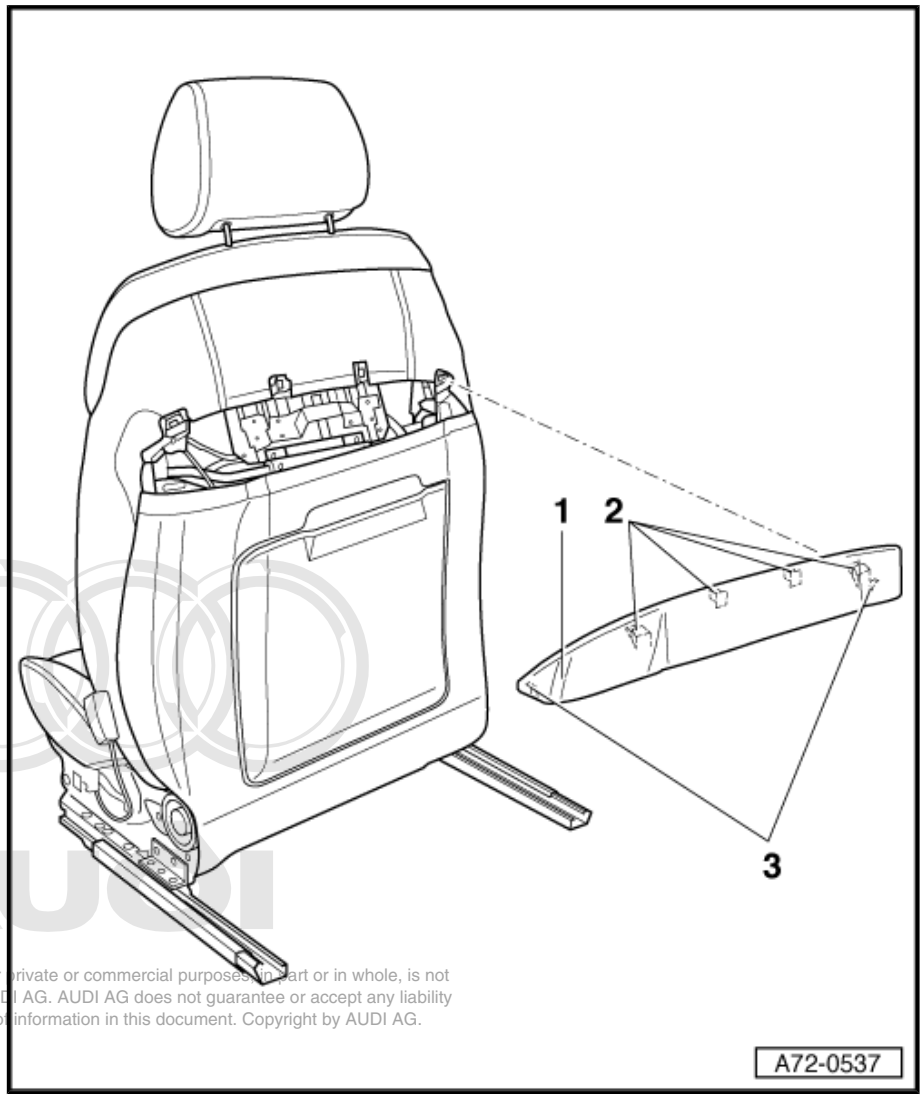

Protected by copyright. Copying for private or commercial purposes, in part or in whole, is not permitted unless authorised by AUDI AG. AUDI AG does not guarantee or accept any liability with respect to the correctness of information in this document. Copyright by AUDI AG.

1.27 Removing and installing lower backrest cover panel

1 - Clips (2x)

2 - Clip

3 - Holder (2x)

4 - Holder (2x)

5 - Lower backrest cover panel

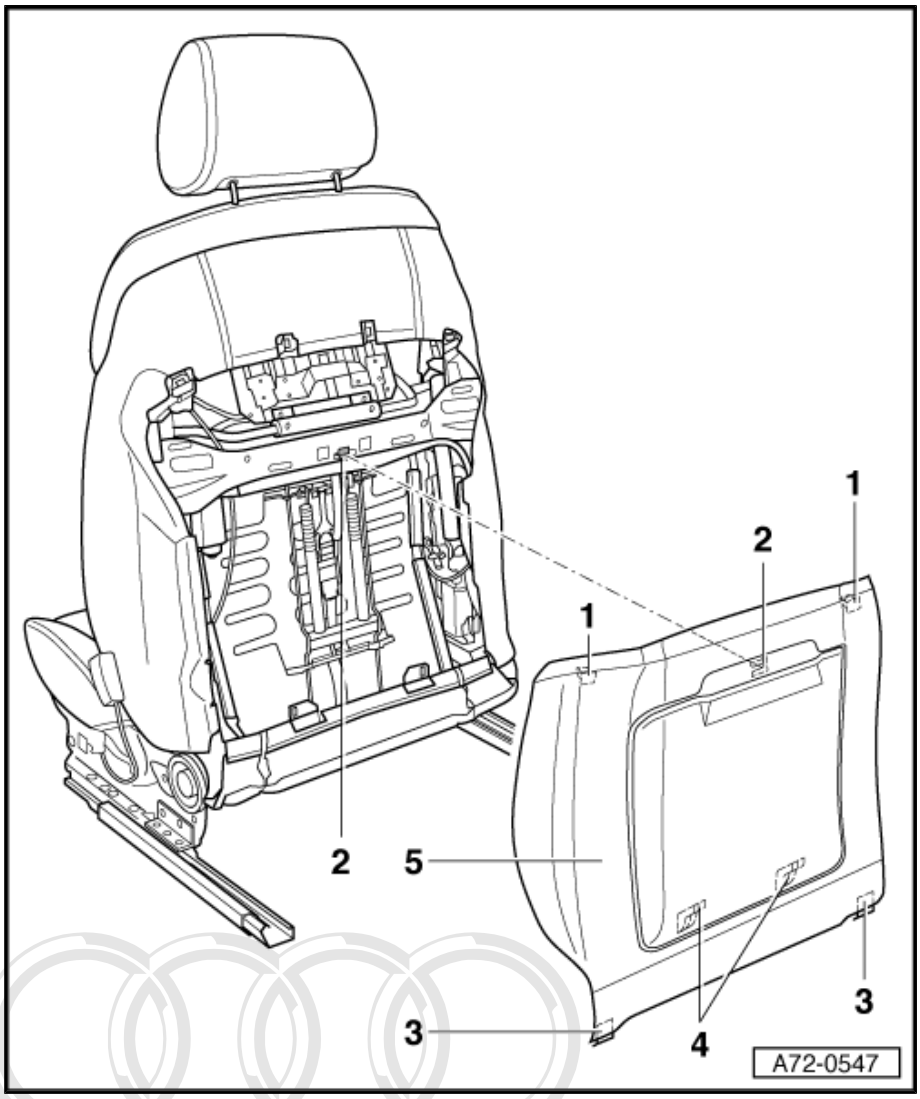

- ♦ Removing
  - Remove the upper backrest cover panel ⇒ page 309 .
  - Unfasten the clips -1- (2x): Insert a flat screwdriver in the clip and turn it clockwise until the clip is released.
  - Unfasten the clip -2-: Insert a flat screwdriver in the clip and turn it clockwise until the clip is released as far as the first detent.
  - Use a flat screwdriver to push the clip -2- to the left until the backrest cover panel -5- is released.
  - Disengage the backrest cover panel -5- upwards from the holders -3- (2x) and -4- (2x).
- ♦ Installing
  - Replace the clips -1- (2x) and -2- if damaged.
  - Guide the clip -2- into the clip holder.
  - Fit the backrest cover panel in the reverse order of removal.

Protected by copyright. Copying for private or commercial purposes, in part or in whole, is not permitted unless authorised by AUDI AG. AUDI AG does not guarantee or accept any liability with respect to the correctness of information in this document. Copyright by AUDI AG.

1.28 Removing and installing 4-way lumbar support

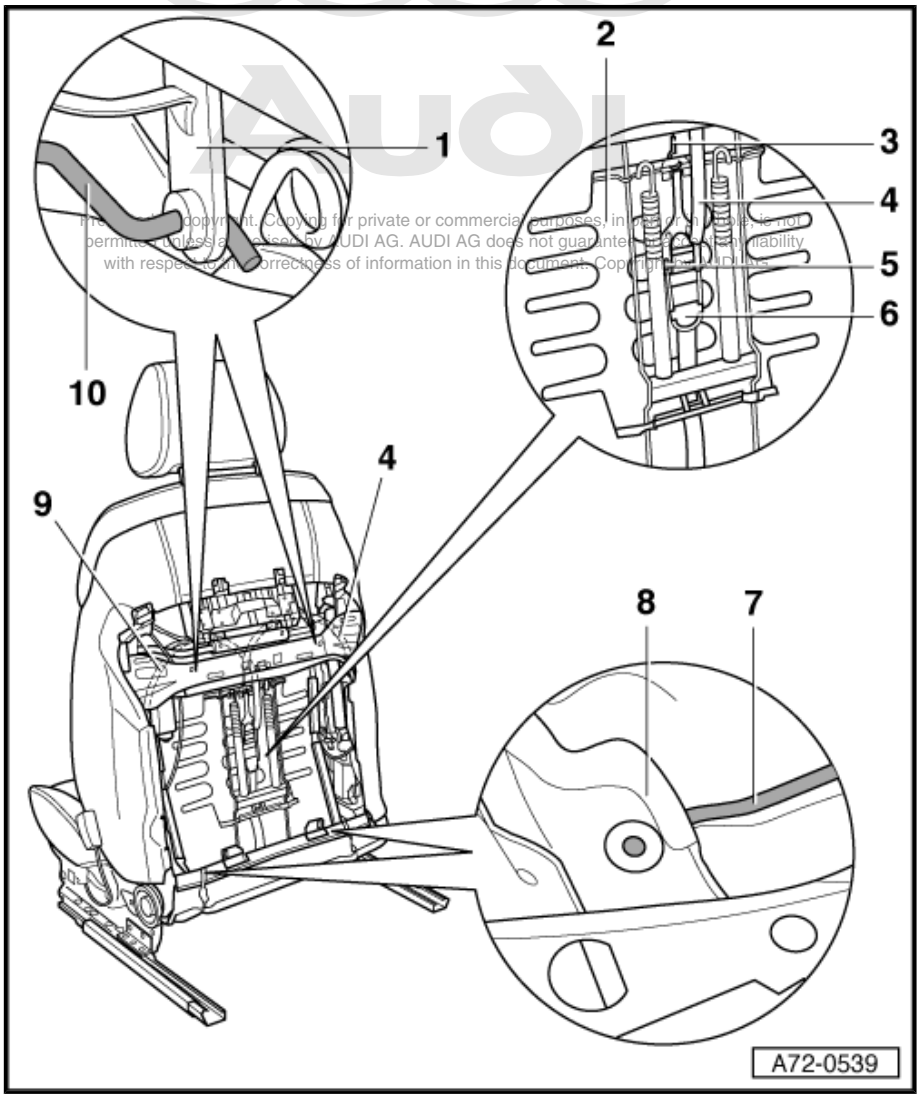

The copyright. Copying for private or commercial purposes, in part or in whole, is not permitted unless authorised by AUDI AG. AUDI AG does not guarantee or assume any liability with respect to the correctness of information in this document. Copyright by AUDI AG.

1 - Holder (2x)

2 - 4-way lumbar support

♦ Removing

- Remove the seat ⇒ page 282 .
- Attach the holder for seat repair -VAS 6136- to the engine and gear-box holder -VAS 6095- .
- Attach the front seat to the holder for seat repair -VAS 6136- .
- Remove the upper backrest cover panel ⇒ page 309 .
- Remove the lower back-rest cover panel ⇒ page 310 .
- Disengage the fasten-er -7- at the bottom on the left and right from the backrest frame -8-.
- Disengage the fasten-er -10- at the top on the left and right from the holders -1- (2x).
- Disengage the Bowden cable for lumbar support adjustment -9- at the hook -3-.
- Disengage the Bowden cable for lumbar support height adjustment -4- at the retainer -5- and at the guide roller -6-.
- Take out the 4-way lum-bar support -2-.

♦ Installing

- Install in reverse order.

3 - Hook

4 - Bowden cable for lumbar support height adjustment

5 - Retainer

6 - Guide roller

7 - Fastener

8 - Backrest frame

9 - Bowden cable for lumbar support adjustment

10 - Fastener

1.29 Removing and installing lumbar support adjustment motors

Note

On the front passenger's seat shown, the lumbar support height adjustment motor is on the right and the lumbar support adjustment motor on the left.

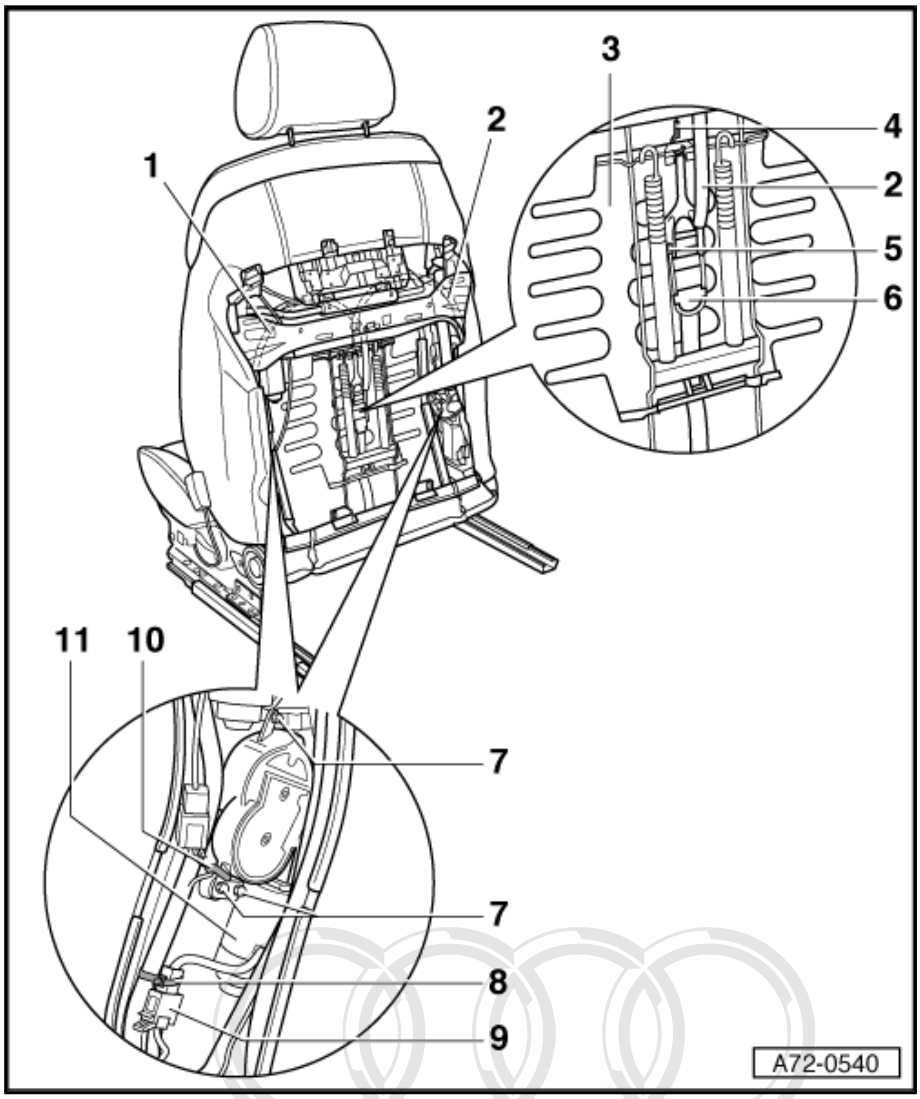

1 - Bowden cable for lumbar support adjustment

2 - Bowden cable for lumbar support height adjustment

3 - 4-way lumbar support

4 - Hook

5 - Retainer

6 - Guide roller

7 - Cap nuts (3x)

8 - Cable tie

9 - Connector

10 - Cable tie

11 - Lumber support adjustment motors (2x)

- ❑ Remove the seat ⇒ page 282 .
- ❑ Attach the holder for seat repair -VAS 6136- to the engine and gearbox holder -VAS 6095- .
- ❑ Attach the front seat to the holder for seat repair -VAS 6136- .
- ❑ Remove the upper backrest cover panel ⇒ page 309 .
- ❑ Remove the lower backrest cover panel ⇒ page 310 .
- ❑ Unfasten the cable ties -8- and -10-.
- ❑ Unplug the connector -9-.
- ❑ Unscrew the cap nuts -7- (3x).
- ❑ Remove the motor on the other side in the same manner.
- ❑ Disengage the Bowden cable for lumbar support height adjustment -1- at the hook -4-.
- ❑ Disengage the Bowden cable for lumbar support adjustment -2- at the retainer -5- and at the guide roller -6-.
- ❑ Remove the lumbar support motors (2x).

Protected by copyright. Copying for private or commercial purposes, in part or in whole, is not permitted unless authorised by AUDI AG. AUDI AG does not guarantee or accept any liability with respect to the correctness of information in this document. Copyright by AUDI AG.

♦ Installing

♦ Install the lumbar support adjustment motors -11- in the reverse order of removal.

1.30 Removing and installing head restraint adjustment motor

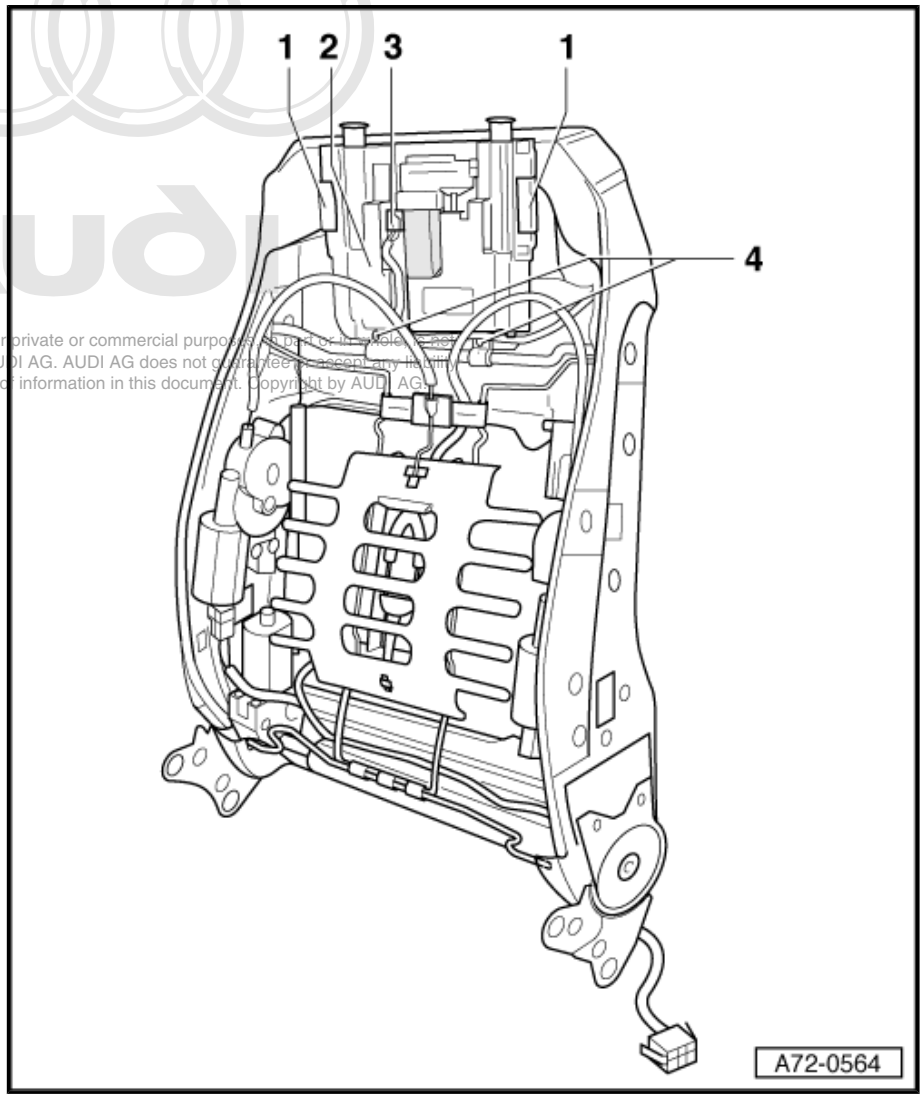

1 - Holder (2x)

2 - Mounting plate with head restraint adjustment motor

♦ Removing

- Remove the head restraints ⇒ page 315 .
- Remove the seat ⇒ page 282 .
- Attach the holder for seat repair -VAS 6136- to the engine and gearbox holder -VAS 6095- .
- Attach the front seat to the holder for seat repair -VAS 6136- .
- Remove the side trim on the sill panel side ⇒ page 292 .
- Remove the side trim on the tunnel side ⇒ page 293 .
- Remove the front trim ⇒ page 293 .
- Remove the holder for the seat side trim panels ⇒ page 294 .
- Remove the backrest ⇒ page 288 .
- Remove the upper backrest cover panel ⇒ page 309 .
- Remove the lower backrest cover panel ⇒ page 310 .
- Remove the head restraint guides ⇒ page 366 .
- Remove the backrest cover and padding ⇒ page 364 .
- Unplug the connector -3-.
- Detach the wiring harness from the mounting plate with head restraint adjustment motor -2-.
- Drill out the rivets -4- (2x).
- Slide the mounting plate with head restraint adjustment motor -2- upwards out of the holders -1- (2x).
- Replace the mounting plate with head restraint adjustment motor -2-.

♦ Installing

- Install the mounting plate with head restraint adjustment motor -2- in the reverse order of removal.

3 - Connector

4 - Rivets (2x)

Publication copyright. Copy for private or commercial purposes, in part or in whole, is not permitted unless authorized by AUDI AG. AUDI AG does not guarantee or accept any liability with respect to the correctness of information in this document. Copyright by AUDI AG.

1.31 Removing and installing upper backrest adjustment motor

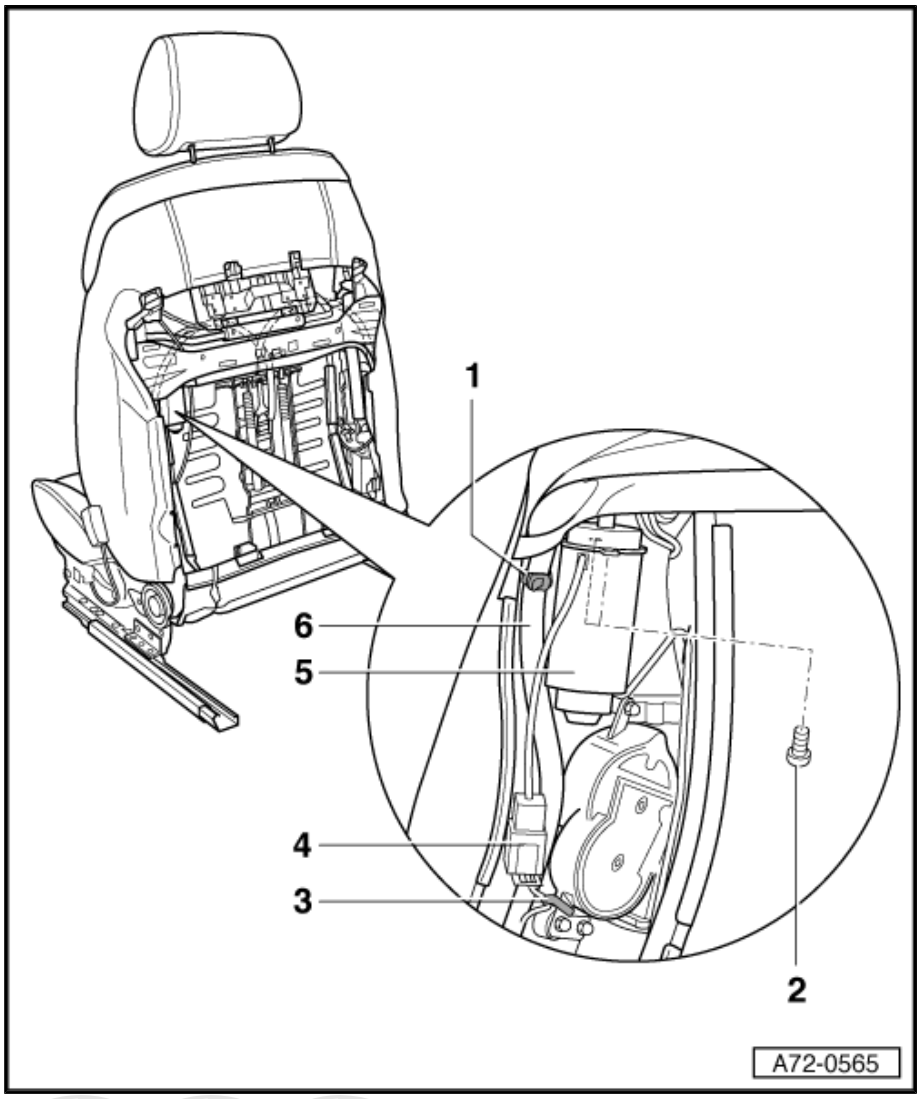

1 - Cable tie

2 - Bolts (2x)

3 - Cable tie

4 - Connector

5 - Upper backrest adjustment motor

- Removing
  - Remove the seat ⇒ page 282 .
  - Attach the holder for seat repair -VAS 6136- to the engine and gearbox holder -VAS 6095- .
  - Attach the front seat to the holder for seat repair -VAS 6136- .
  - Remove the upper backrest cover panel ⇒ page 309 .
  - Remove the lower backrest cover panel ⇒ page 310 .
  - Unfasten the cable tie -3-.
  - Unplug the connector -4-.
  - Unclip the cable tie -1- from the backrest frame.
  - Pull the wiring harness -6- aside.
  - Unscrew the bolts -2- (2x).
  - Pull out the upper backrest adjustment motor -5- downwards.
- Installing
  - Install the upper backrest adjustment motor -5- in the reverse order of removal.

6 - Wiring harness

Protected by copyright. Copying for private or commercial purposes, in part or in whole, is not permitted unless authorised by AUDI AG. AUDI AG does not guarantee or accept any liability with respect to the correctness of information in this document. Copyright by AUDI AG.

1.32 Removing and installing electrically operated head restraint

1 - Clips (2x)

2 - Head restraint

♦ Removing

– Remove the upper backrest cover panel ⇒ page 309 .
– Remove the lower backrest cover panel ⇒ page 310 .
– Use a screwdriver to pull back the clips -1- (2x) on the open side.
– Move the backrest to the rear.
– Lift out the head restraint -2-.

♦ Installing

– Install the head restraint -2- in the reverse order of removal.

– Electrically operated head restraints with memory: For re-adaption of the head restraint stop, move the head restraint to the bottom and then the top position once.

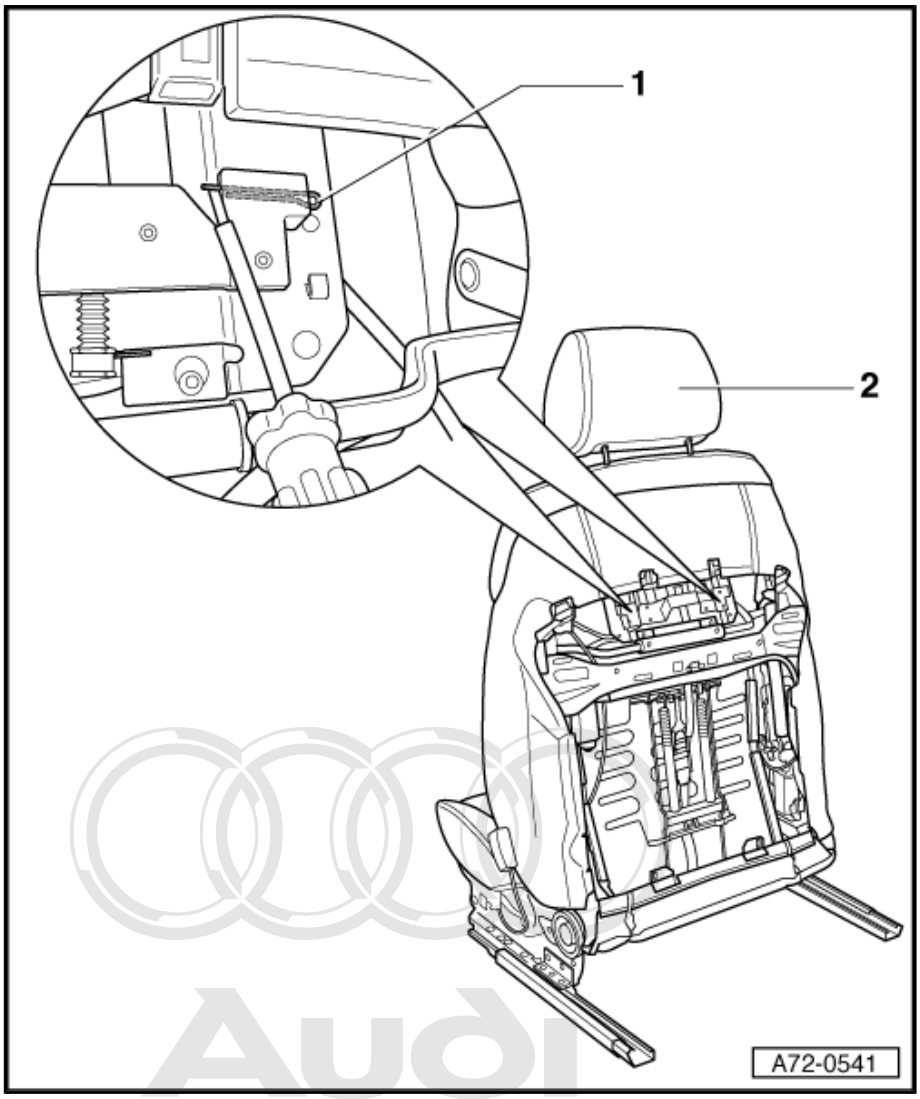

Protected by copyright. Copying for private or commercial purposes, in part or in whole, is not permitted unless authorised by AUDI AG. AUDI AG does not guarantee or accept any liability with respect to the correctness of information in this document. Copyright by AUDI AG.

1.33 Removing and installing motor for head restraint adjustment with active head restraint unit

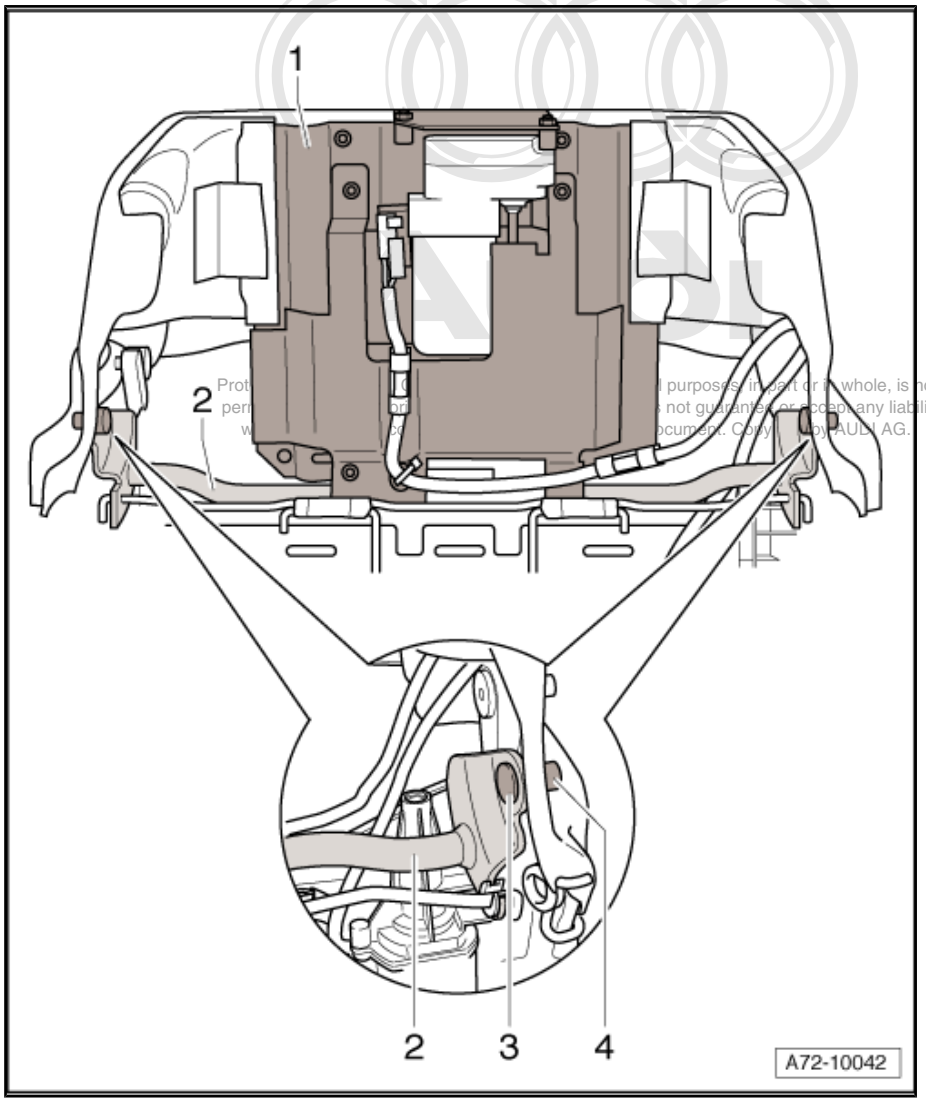

1 - Motor for head restraint adjustment with active head restraint unit

- Remove the seat ⇒ page 282 .
- Attach the holder for seat repair -VAS 6136- to the engine and gearbox holder -VAS 6095- .
- Attach the front seat to the holder for seat repair -VAS 6136- .
- Remove the upper backrest cover panel ⇒ page 309 .
- Remove the lower backrest cover panel ⇒ page 310 .
- Detach the backrest padding ⇒ page 364 .
- Use a power drill to remove the rivet -3- and the spacer sleeve -4- on the left and right.
- Unplug the connector and disconnect the wiring at the head restraint adjustment motor -1-.
- Pull out the motor for head restraint adjustment with active head restraint unit -1- and shaft -2- downwards.

2 - Shaft for active head restraint unit

3 - Rivet

4 - Spacer sleeve

1.34 Removing and installing seat ventilation unit (seat pan)

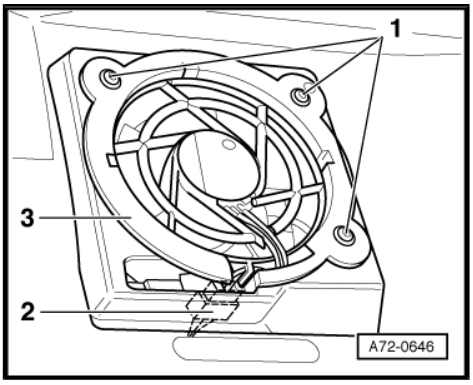

♦ Removing

– Remove the seat ⇒ page 282 .

– Attach the holder for seat repair -VAS 6136- to the engine and gearbox holder -VAS 6095- .

– Attach the front seat to the holder for seat repair -VAS 6136- .

– Unplug the connector -2-.

– Unscrew the bolts -1- (3x). 0.5 Nm.

– Detach the seat ventilation unit -3-.

♦ Installing

– Install the seat ventilation unit -3- in the reverse order of removal.

1.35 Removing and installing seat ventilation unit (backrest)

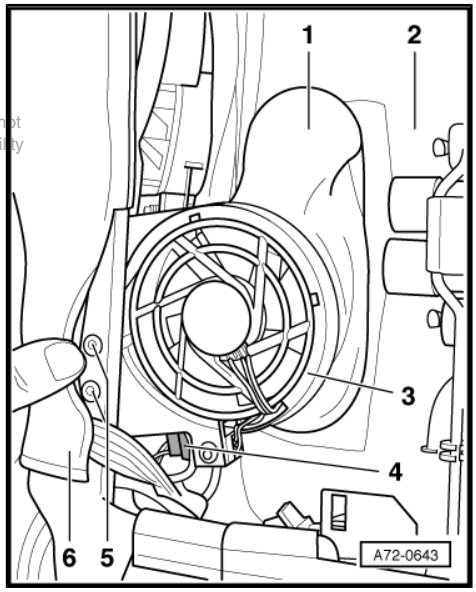

Note

The rubber guide -1- is stitched to the padding -2-. The padding must be replaced if the rubber guide is defective.

Copyright by AUDI AG. No part of this publication may be reproduced or transmitted in any form or by any means, including photocopying and microfilm, without the prior written permission of AUDI AG. AUDI AG does not guarantee or accept any liability with respect to the correctness of information in this document. Copyright by AUDI AG.

♦ Removing

– Remove the seat ⇒ page 282 .

– Attach the holder for seat repair -VAS 6136- to the engine and gearbox holder -VAS 6095- .

– Attach the front seat to the holder for seat repair -VAS 6136- .

– Remove the upper backrest cover panel ⇒ page 309 .

– Remove the lower backrest cover panel ⇒ page 310 .

– Unplug the connector -4-.

– Press the cover -6- aside.

– Drill out the rivets -5- (2x).

– Detach the seat ventilation unit -3-.

♦ Installing

– Install the seat ventilation unit -3- in the reverse order of removal.

1.36 Removing rear footwell light

– Press out the rear footwell light -1- from the rear.
– Unplug the connector -2-.

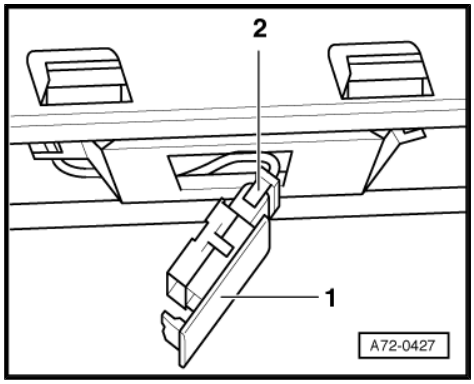

1.37 Electrically operated front seat wiring

1.37.1 Basic seat wiring

Note

- *The illustration shows the front passenger's seat, the driver's seat configuration is a mirror image.*
- *Cable routing and attachment to the seat must be carried out as shown so as not to damage the wiring harness.*
- *With new seat wiring, the locating clip ⇒ Item 5 (page 322) must be inserted first.*

Wiring on right side

Protected by copyright. Copying for private or commercial purposes, in part or in whole, is not permitted unless authorised by AUDI AG. AUDI AG does not guarantee or accept any liability with respect to the correctness of information in this document. Copyright by AUDI AG.

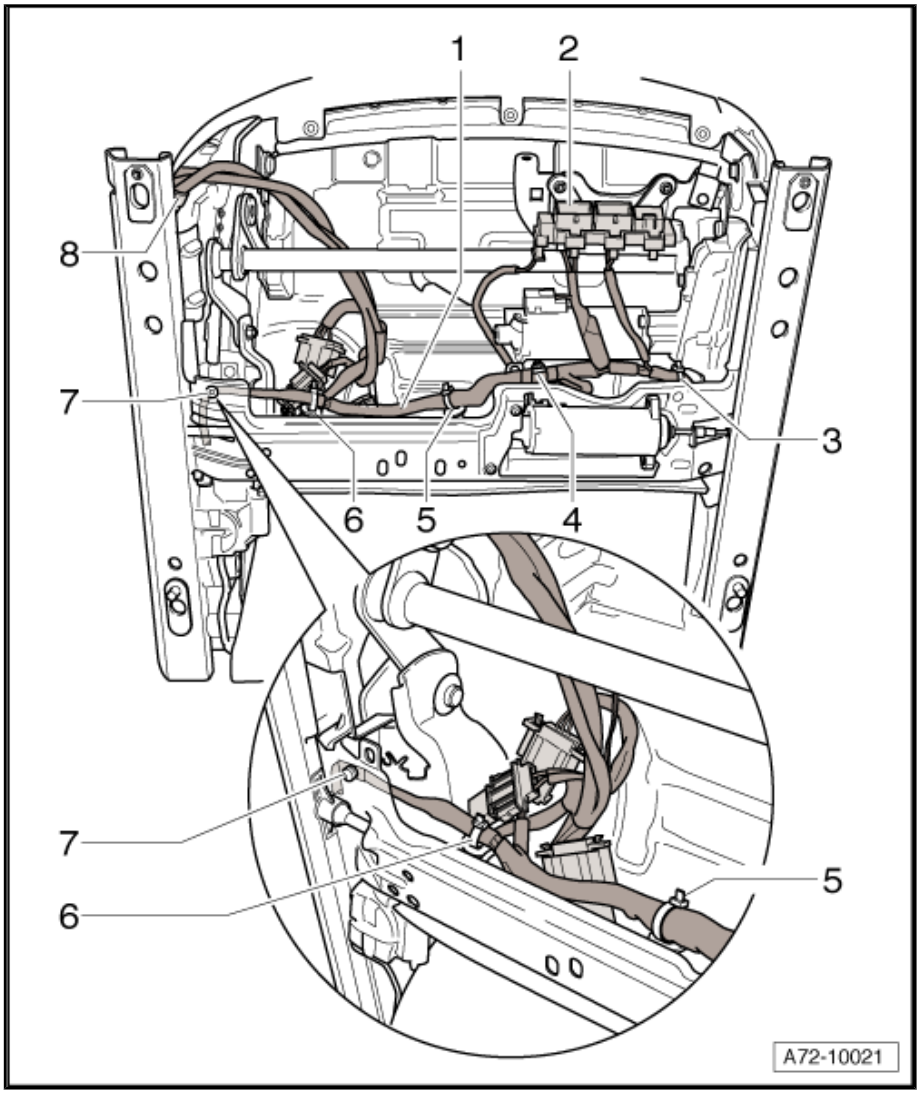

1 - Wiring harness

2 - Connector console

3 - Locating clip

- For fitting refer to Fig., wiring at connector console ⇒ Item 1 (page 321)
- The locating clip -3- must always be fitted from underneath.
- If missing, the locating clip -3- must always be attached to prevent cable abrasion on the seat frame.
- Attaching missing locating clip -3- ⇒ Item 5 (page 322)
- For attachment of locating clip -3-, refer to ⇒ Item 5 (page 322) and ⇒ Item 3 (page 323) .

4 - Binding clip

- For fitting refer to Fig., wiring at connector console ⇒ Item 2 (page 321)

5 - Locating clip

- For attachment to centre cross member

6 - Locating clip

- For attachment to outer cross member

7 - Locating clip

- For fitting refer to Fig., wiring on right side (exterior view) ⇒ Item 7 (page 320)

8 - Locating clip

Wiring on right side (exterior view)

Note

The detail shows the view from the side.

Protected by copyright. Copying for private or commercial purposes, in part or in whole, is not permitted unless authorised by AUDI AG. AUDI AG does not guarantee or accept any liability with respect to the correctness of information in this document. Copyright by AUDI AG.

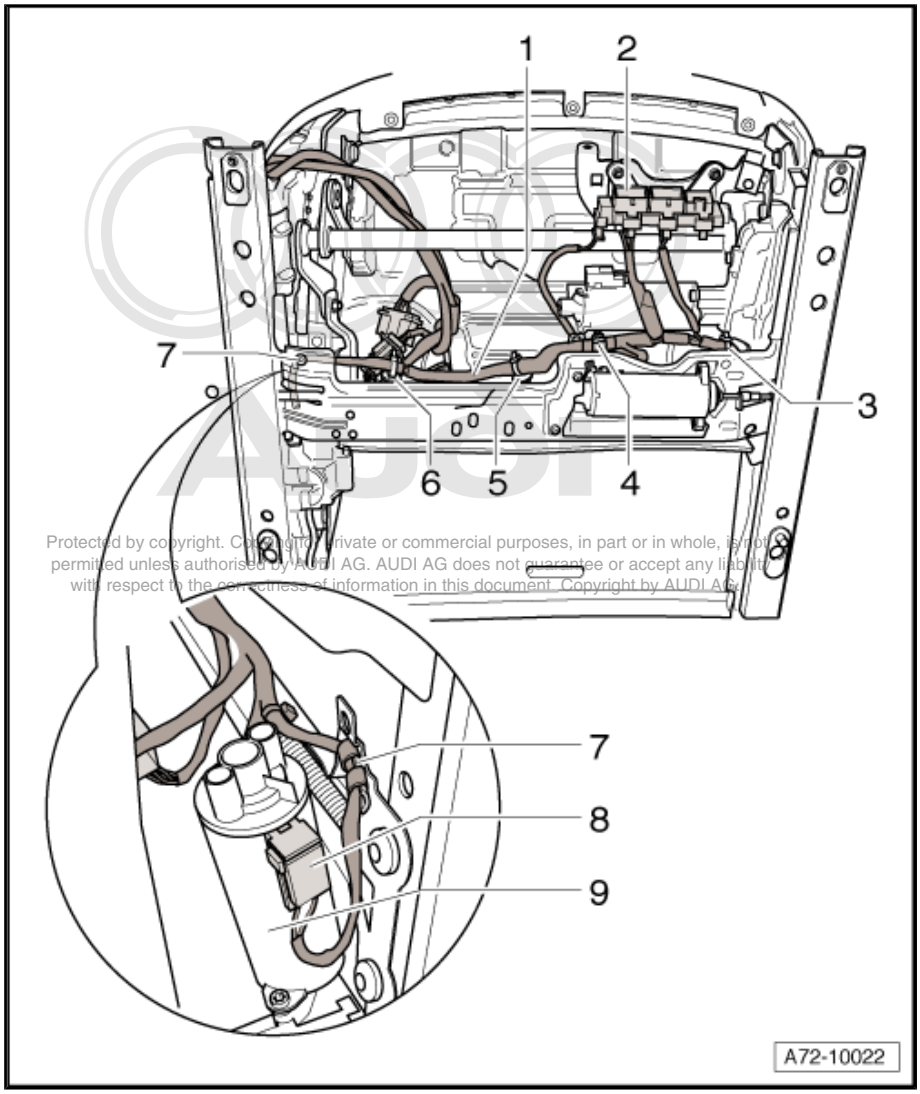

Protected by copyright. Copying for private or commercial purposes, in part or in whole, is not permitted unless authorised by AUDI AG. AUDI AG does not guarantee or accept any liability with respect to the correctness of information in this document. Copyright by AUDI AG.

1 - Wiring harness

2 - Connector console

3 - Locating clip

- For fitting refer to Fig., wiring at connector console ⇒ Item 1 (page 321)
- The locating clip -3- must always be fitted from underneath.
- If missing, the locating clip -3- must always be attached to prevent cable abrasion on the seat frame.
- Attaching missing locating clip -3- ⇒ Item 5 (page 322)
- For attachment of locating clip -3-, refer to ⇒ Item 5 (page 322) and ⇒ Item 3 (page 323) .

4 - Binding clip

- For fitting refer to Fig., wiring at connector console ⇒ Item 2 (page 321)

5 - Locating clip

- For attachment to centre cross member

6 - Locating clip

- For attachment to outer cross member

7 - Locating clip for seat height adjustment motor wiring

8 - Seat height adjustment motor connector

9 - Seat height adjustment motor

Wiring at connector console

1 - Locating clip

2 - Binding clip

3 - Airbag cable locating clip

4 - Airbag cable

5 - Seat angle adjustment motor connector

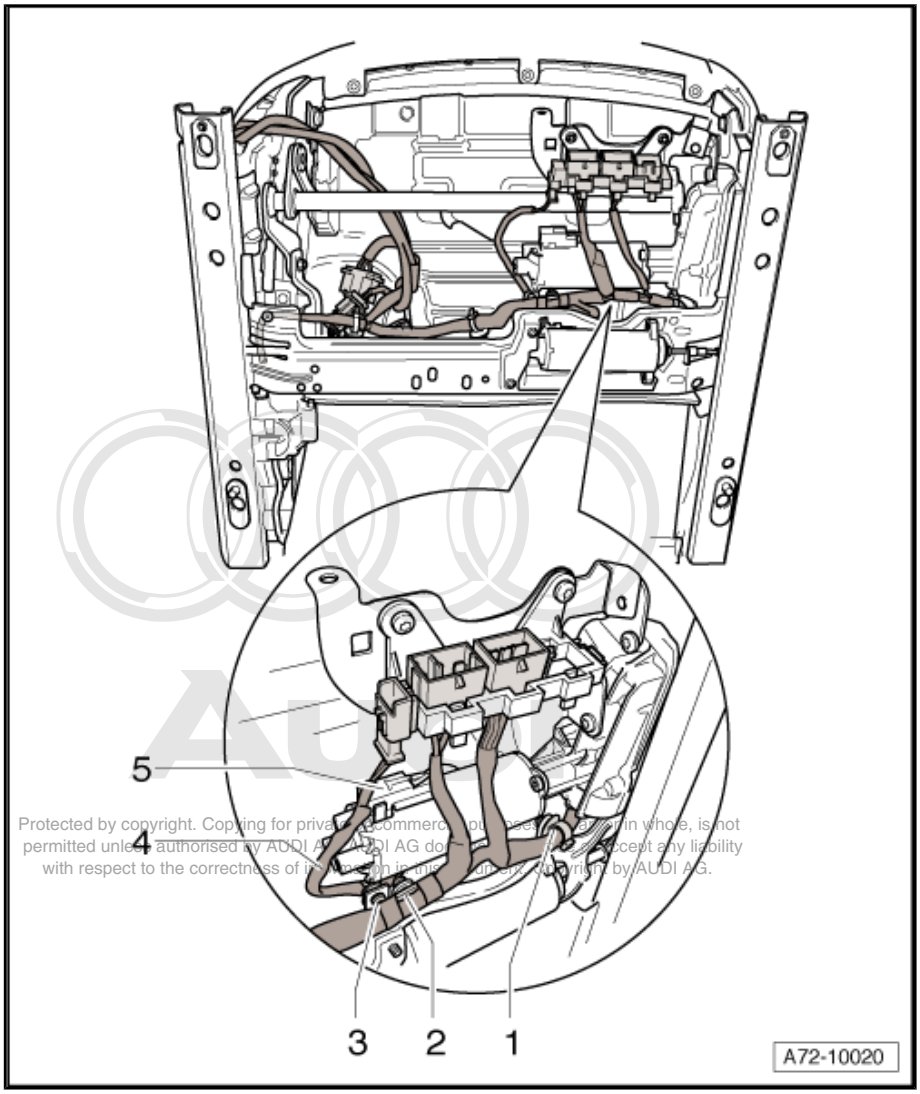

Protected by copyright. Copying for private or commercial purposes, in part or in whole, is not permitted unless authorised by AUDI AG. AUDI AG does not guarantee or accept any liability with respect to the correctness of information. Use only in accordance with copyright by AUDI AG.

Upper seat pan wiring

Note

The cover and padding have been removed in the illustration.

1 - Seat fan connector (3–pin)

2 - Rear footwell light connector

3 - Backrest connector (8–pin)

4 - Backrest heating connector (2–pin)

5 - Locating clip

- Refer also to Fig., wiring at connector console ⇒ Item 1 (page 321) and Fig., wiring on left side (exterior view) ⇒ Item 3 (page 323)
- The locating clip -5- must always be fitted from underneath.
- If missing, the locating clip -5- must always be attached to prevent cable abrasion on the seat frame.
- If missing, the locating clip -5- must be attached 80 mm (dimension -A-) from the centre of the binding clip -6-.

Note

6 - Left binding clip

7 - Right binding clip

8 - Seat heating connector (2–pin)

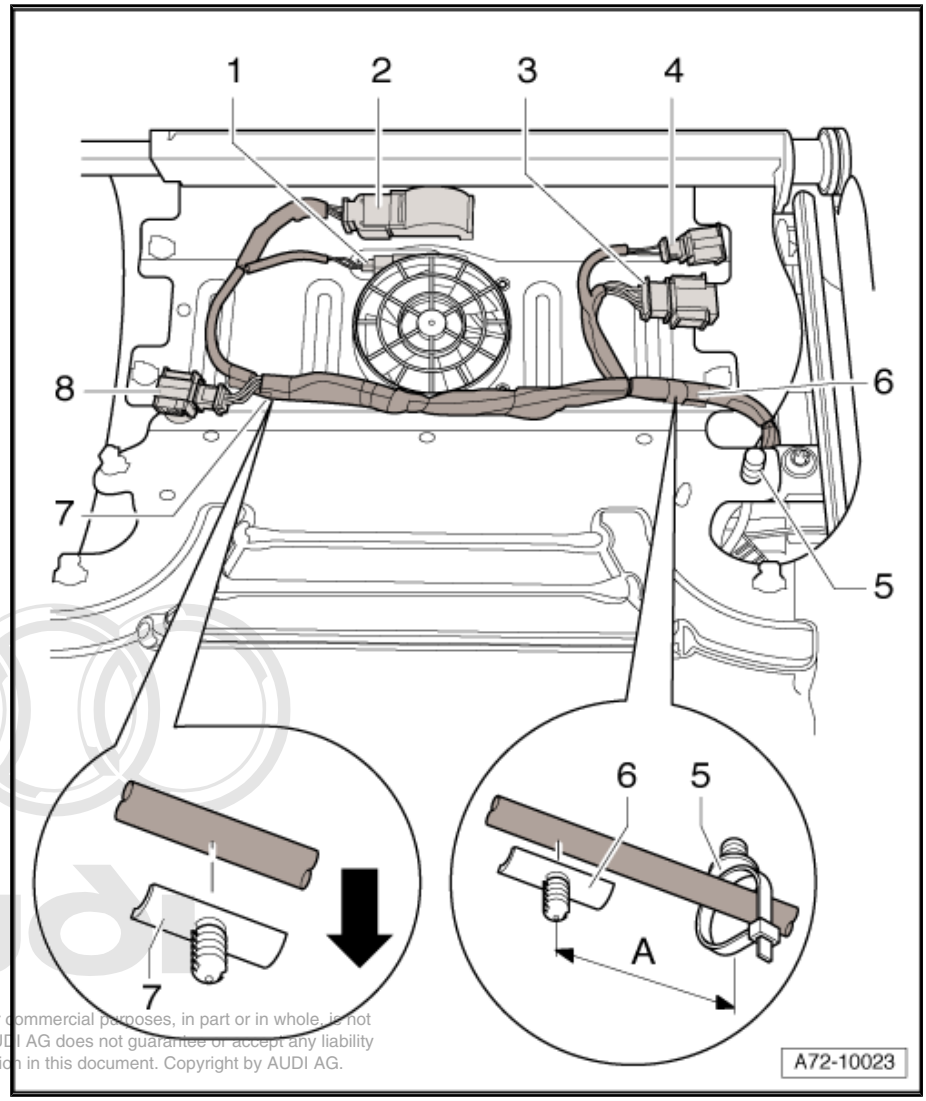

Protected by copyright. Copying for private or commercial purposes, in part or in whole, is not permitted unless authorised by AUDI AG. AUDI AG does not guarantee or accept any liability with respect to the correctness of information in this document. Copyright by AUDI AG.

Wiring on left side (exterior view)

Note

The detail shows the view from the side.

1 - Locating clip

2 - Airbag earth connector (1–pin)

3 - Locating clip

- Refer also to Fig., wiring at connector console
  ⇒ Item 1 (page 321)
- The locating clip -3- must always be fitted from underneath.
- If missing, the locating clip -3- must always be attached to prevent cable abrasion on the seat frame.
- Attaching missing locating clip -3-
  ⇒ Item 5 (page 322)

4 - Binding clip

5 - Backrest heating connector (2–pin)

6 - Backrest connector (8–pin)

7 - Binding clip

8 - Belt buckle connector

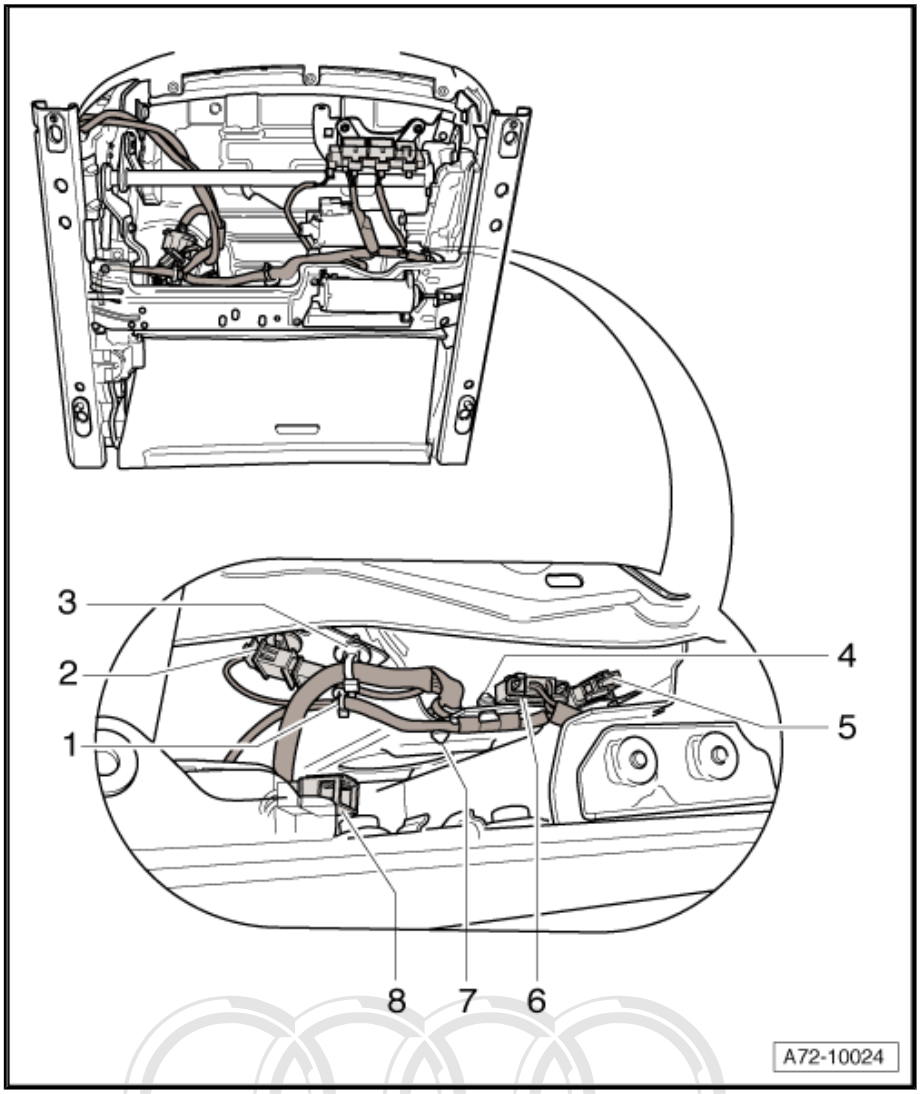

Wiring for seat pan motors

1 - Seat angle adjustment motor connector

2 - Seat angle adjustment motor wiring

- The cable -2- must be routed above the seat angle adjustment motor.
- The cable -2- is the longer wire.

3 - Seat longitudinal adjustment motor connector

4 - Binding clip

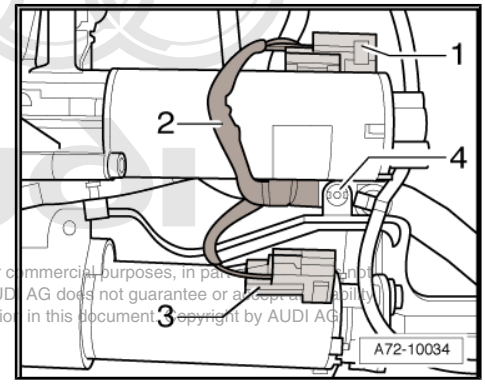

Copyright. Copying for private or commercial purposes, in part or in whole, is not permitted unless authorised by AUDI AG. AUDI AG does not guarantee or accept any liability with respect to the correctness of information in this document. Copyright by AUDI AG

Backrest wiring

Note

The upper detail shows the view from the front.

1 - Backrest wiring harness

2 - Locating clips (6x)

3 - Backrest adjustment motor connector

4 - Backrest connector (8–pin)

5 - Backrest heating connector (2–pin)

6 - Cable guide

- The cable must be routed through the cable guide and behind the backrest adjustment shaft.

7 - Lumbar support height adjustment motor connector

8 - Lumbar support height adjustment motor

9 - Cable tie (2x)

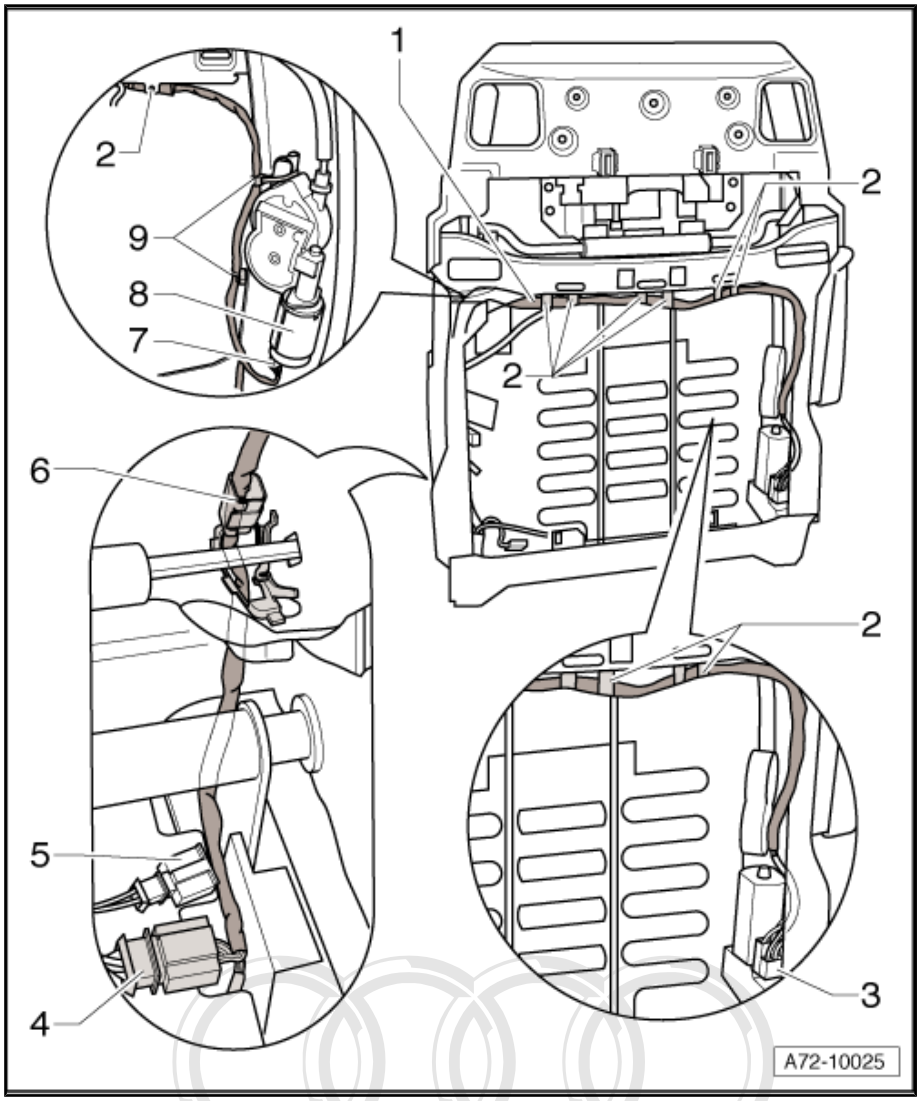

1.37.2 Convenience seat wiring

Note

- *The illustration shows the front passenger's seat, the driver's seat configuration is a mirror image.*
- *Cable routing and attachment to the seat must be carried out as shown so as not to damage the wiring harness.*

Protected by copyright. Copying for private or commercial purposes, in part or in whole, is not permitted without the consent of AUDI AG. AUDI AG does not guarantee or accept any liability with respect to the correctness of information in this document. Copyright by AUDI AG.

Wiring on left side

1 - Airbag earth connector (1–pin)

2 - Cable to seat depth adjustment motor

3 - Connector at seat depth adjustment motor

4 - Connector to belt buckle

5 - Backrest wiring harness

6 - Seat wiring harness

7 - Binding clip

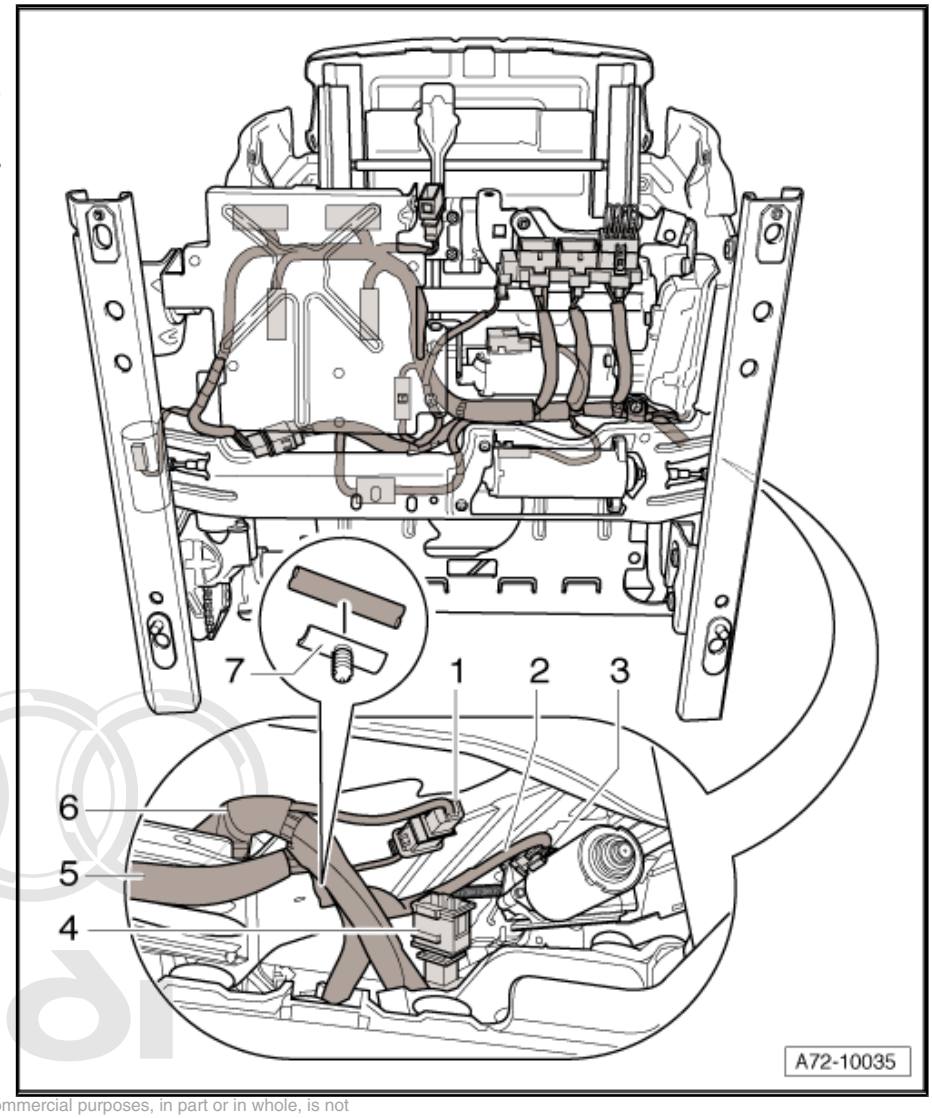

Protected by copyright. Copying for private or commercial purposes, in part or in whole, is not permitted unless authorised by AUDI AG. AUDI AG does not guarantee or accept any liability with respect to the correctness of information in this document. Copyright by AUDI AG.

Wiring on right side (exterior view), memory control unit

Note

The detail shows the view from the side.

1 - Connector at seat height adjustment motor

2 - Seat/backrest interface (12–pin; power connector)

3 - Connector to seat ventilation control unit (12–pin; brown)

4 - Seat/backrest interface (12–pin; signal connector)

5 - Connector to memory control unit (32–pin; blue; signal connector)

6 - Connector to switch unit at seat trim (12–pin)

7 - Connector to memory control unit (12–pin; power connector; 2x)

8 - Connector to memory control unit (32–pin; grey; signal connector)

9 - Binding clip

10 - Locating clip

Note

11 - Binding clip for side airbag cable

12 - Binding clip for backrest wiring harness

13 - Connector for backrest heating

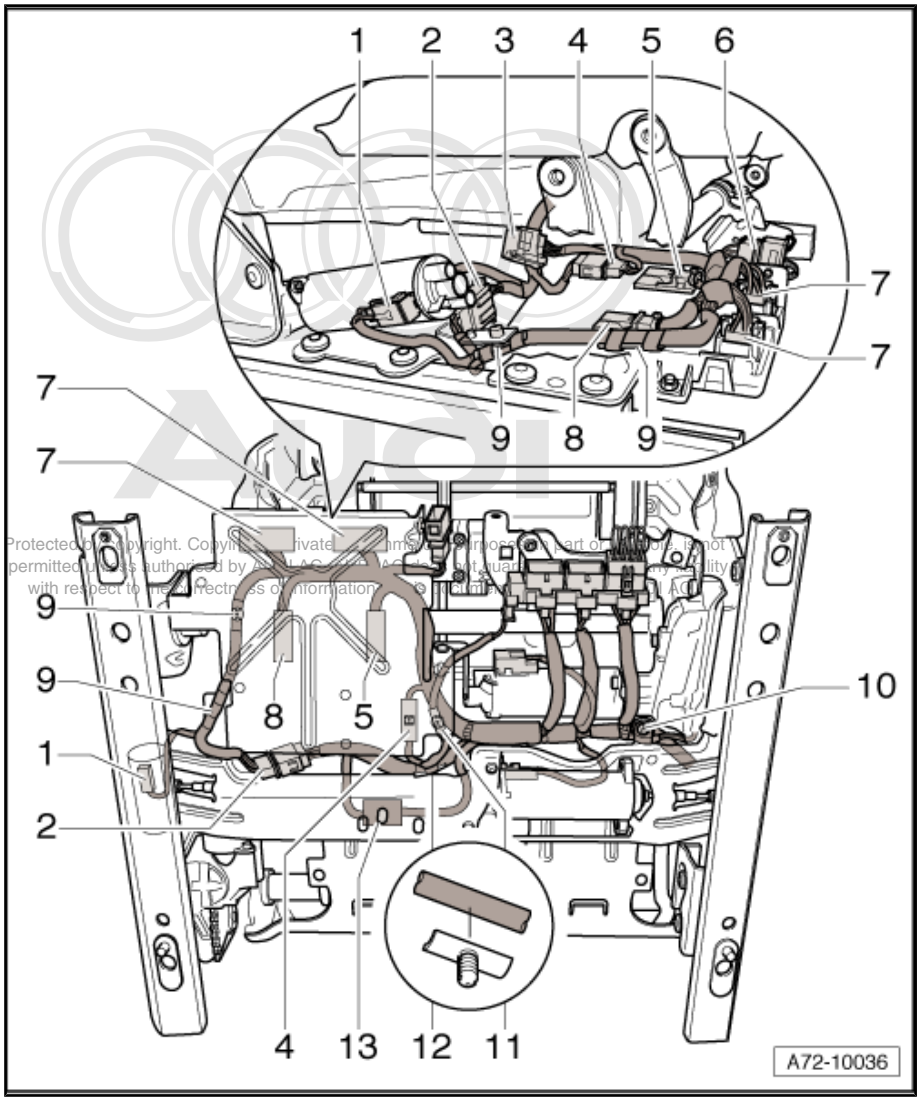

Wiring at connector console

1 - Seat/body interface (17–pin; brown)

2 - Seat/body interface (17–pin; grey)

3 - Emergency power link

- ❑ For seat height and longitudinal adjustment

4 - Locating clip

Note

5 - Binding clip

Note

6 - Cable to side airbag

- ❑ Separate cable, not part of seat wiring harness

7 - Connector for side airbag cable

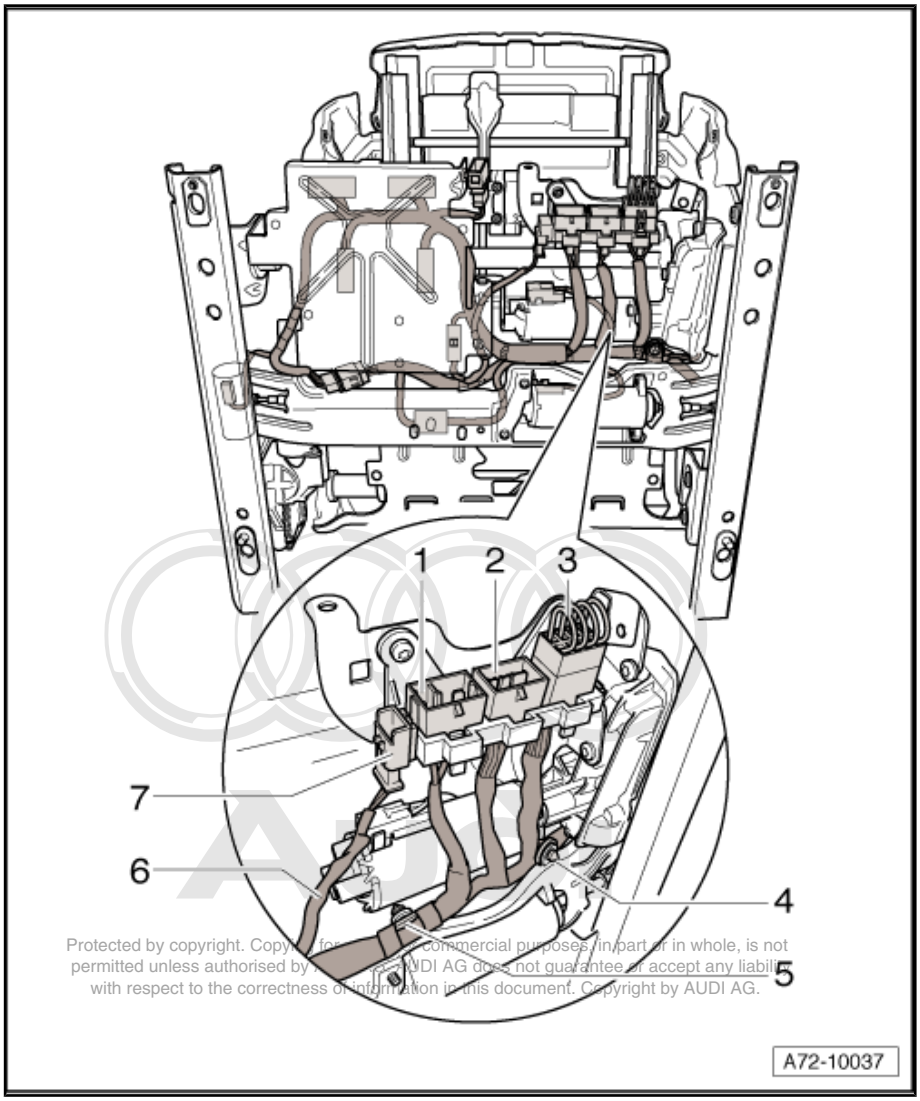

Protected by copyright. Copy for commercial purposes, in part or in whole, is not permitted unless authorised by AUDI AG. AUDI AG does not guarantee or accept any liability with respect to the correctness of information in this document. Copyright by AUDI AG.

Upper seat pan wiring

Note

The cover and padding have been removed in the illustration.

1 - Seat fan connector (3–pin)

2 - Rear footwell light connector

3 - Seat occupied sensor connector (2–pin)

4 - Seat heating connector (8–pin)

5 - Left binding clip

6 - Locating clip

- The locating clip -6- must always be fitted from underneath.
- If missing, the locating clip -6- must always be attached to prevent cable abrasion on the seat frame.
- If missing, the locating clip -6- must be attached 80 mm (dimension -A-) from the centre of the binding clip -5-.

Note

7 - Right binding clip

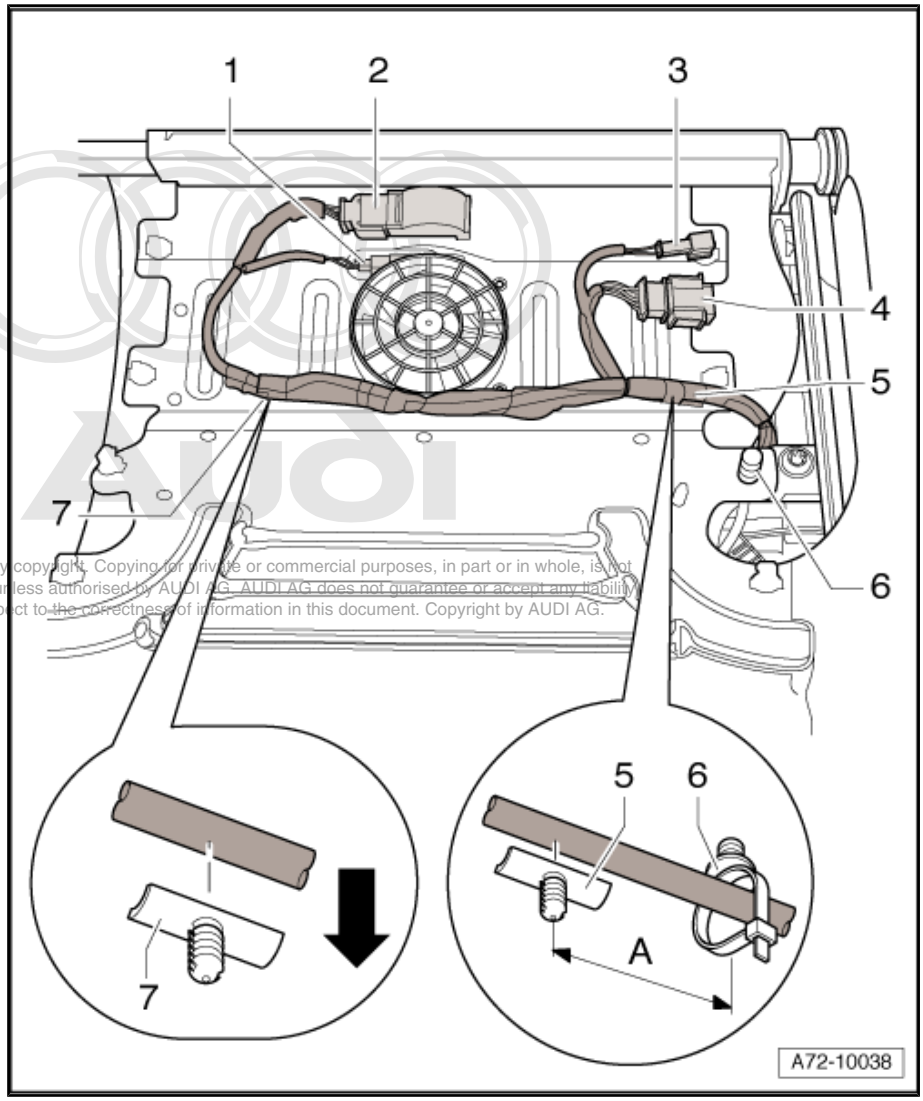

Protected by copyright. Copying for private or commercial purposes, in part or in whole, is not permitted unless authorised by AUDI AG. AUDI AG does not guarantee or accept any liability with respect to the correctness of information in this document. Copyright by AUDI AG.

Wiring for seat pan motors

1 - Seat angle adjustment motor connector

2 - Seat angle adjustment motor wiring

- The cable -2- must be routed above the seat angle adjustment motor.
- The cable -2- is the longer wire.

3 - Seat longitudinal adjustment motor connector

4 - Binding clip

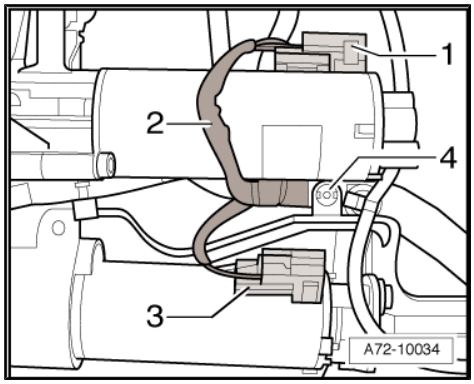

Backrest wiring

Note

The upper detail shows the view from the front.

1 - Backrest wiring harness

2 - Locating clips (6x)

3 - Motor for massage function

4 - Connector for massage function motor

5 - Backrest adjustment motor connector

6 - Cable tie for securing wiring (2x)

7 - Lumbar support height adjustment motor connector

8 - Lumbar support height adjustment motor

9 - Cable guide

- The cable must be routed through the cable guide -7- and behind the backrest adjustment shaft.

10 - Backrest heating connector (2–pin)

11 - Seat heating connector (8–pin)

12 - Backrest fan connector (3–pin)

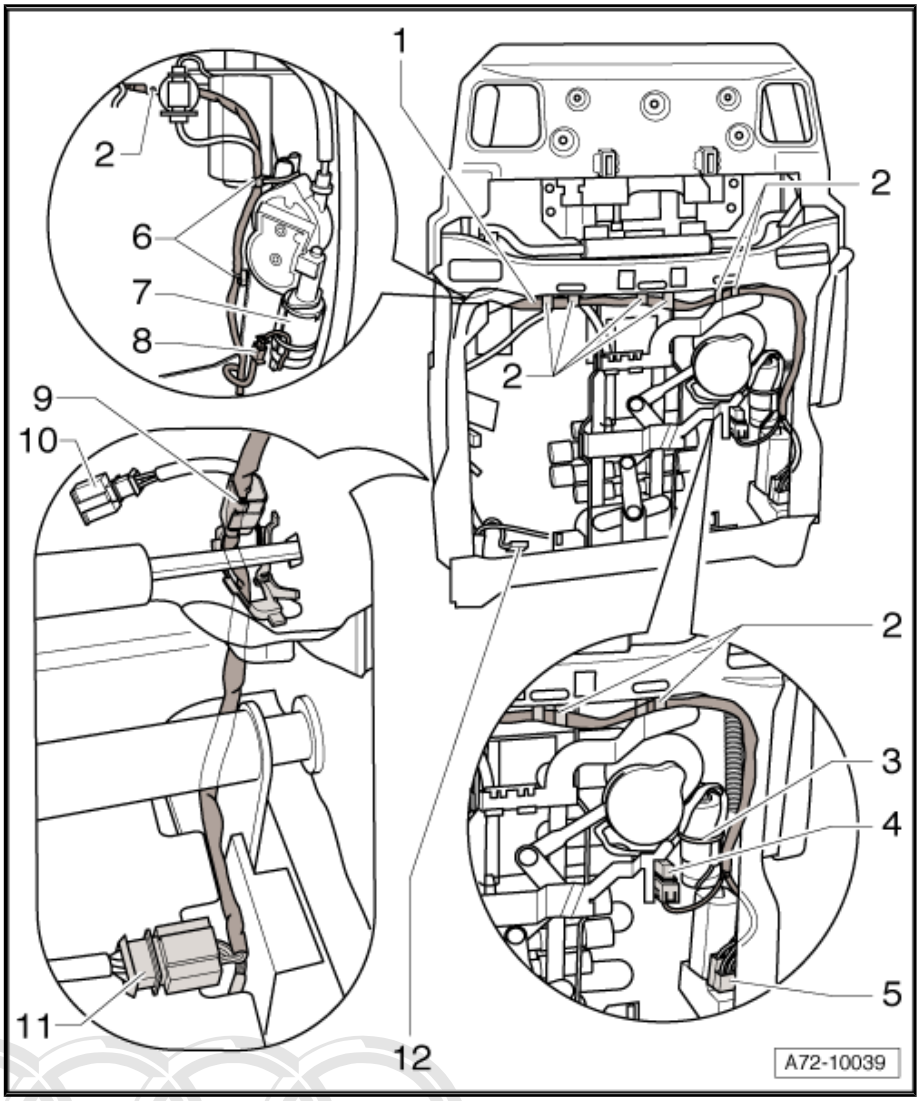

Head restraint motor wiring

Protected by copyright. Copying for private or commercial purposes, in part or in whole, is not permitted unless authorised by AUDI AG. AUDI AG does not guarantee or accept any liability with respect to the correctness of information in this document. Copyright by AUDI AG.

1 - Binding clip

2 - Locating clip

3 - Binding clip

4 - Connector to head restraint adjustment motor

5 - Locating clip

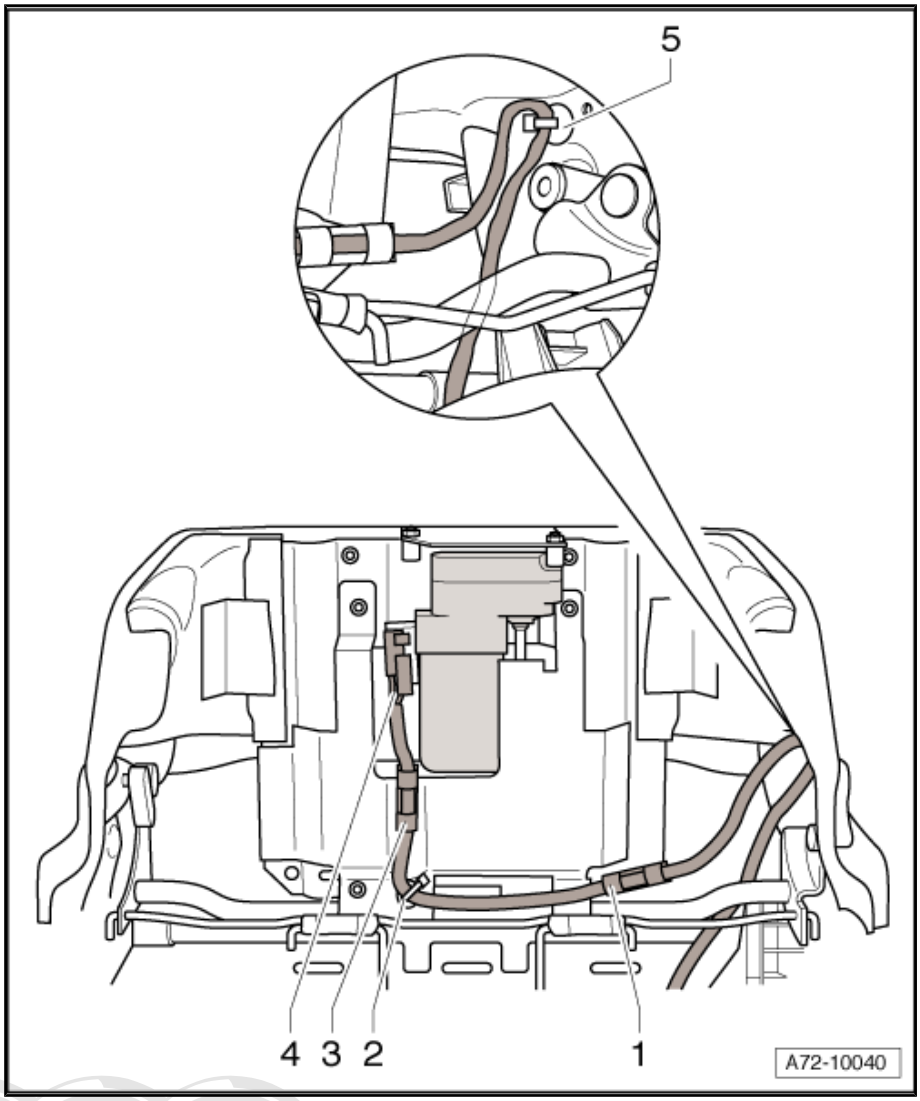

Attachment points on retaining plate for memory control unit

Protected by copyright. Copying for private or commercial purposes, in part or in whole, is not permitted unless authorised by AUDI AG. AUDI AG does not guarantee or accept any liability with respect to the correctness of information in this document. Copyright by AUDI AG.

1 - Attachment point for side airbag

2 - Attachment point for connector to right seat backrest

3 - Attachment point for left seat ventilation control unit

4 - Attachment point for memory control unit

5 - Attachment point for right seat ventilation control unit

6 - Attachment point for left seat memory control unit

7 - Attachment point for left seat ventilation control unit

8 - Attachment point for connector to left seat backrest

9 - Attachment point for right seat ventilation control unit

10 - Attachment point for left and right seat memory control unit

11 - Attachment point for left and right seat memory control unit

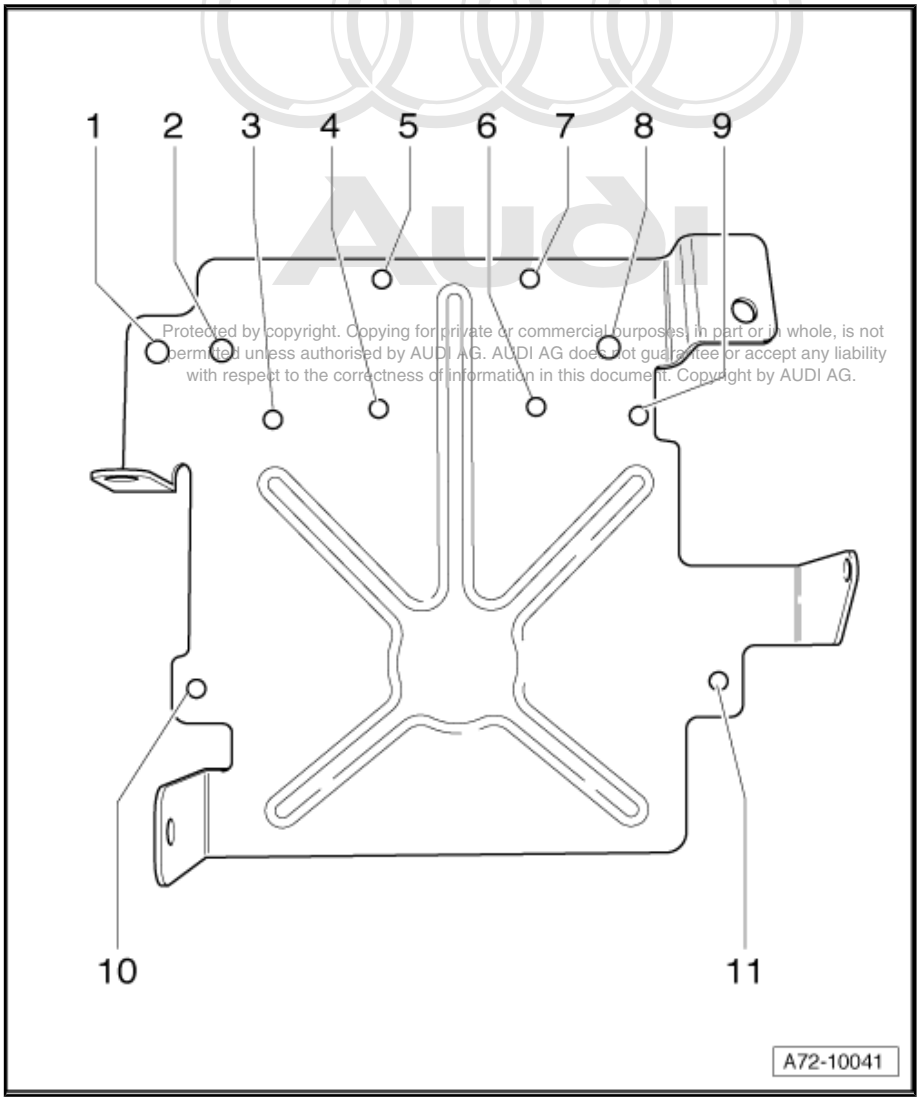

Protected by copyright. Copying for private or commercial purposes, in part or in whole, is not permitted unless authorised by AUDI AG. AUDI AG does not guarantee or accept any liability with respect to the correctness of information in this document. Copyright by AUDI AG.

2 Rear seats

Block diagram

- ⇒ „2.1 Removing and installing rear seat bench“, page 333
- ⇒ „2.2 Removing and installing rear seat backrest“, page 334
- ⇒ „2.3 Removing and installing centre armrest“, page 335
- ⇒ „2.4 Dismantling centre armrest“, page 336
- ⇒ „2.5 Removing and installing cup holder“, page 336
- ⇒ „2.6 Removing and installing centre mount“, page 336
- ⇒ „2.7 Removing and installing head restraints“, page 337
- ⇒ „2.8 Removing and installing centre head restraint“, page 338
- ⇒ „2.9 Removing and installing centre head restraint blind“, page 338
- ⇒ „2.10 Dismantling centre head restraint“, page 339
- ⇒ „2.11 Removing and installing slide-in locking mechanism for centre head restraint“, page 339
- ⇒ „2.12 Removing and installing backrest mat“, page 340

Special tools and workshop equipment required

- Airbag adapter -VAS 6229-

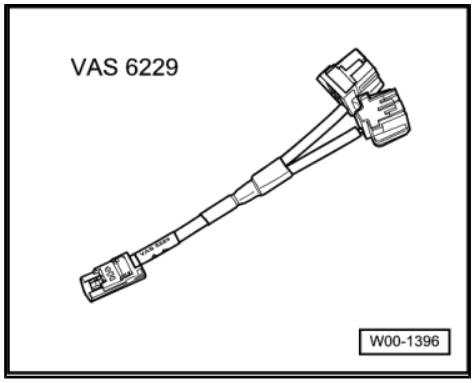

Protected by copyright. Copying for private or commercial purposes, in part or in whole, is not permitted unless authorised by AUDI AG. AUDI AG does not guarantee or accept any liability with respect to the correctness of information in this document. Copyright by AUDI AG.

2.1 Removing and installing rear seat bench

1 - Rear seat bench

- ♦ Removing
  - – Raise the rear seat bench -1- and pull out the rear seat bench -1- to the front.
  - – Seat heating: Unplug the connector.
- ♦ Installing

> ⚠ **Caution**
>
> *The mounting sockets are always to be replaced after removing the seat bench* *⇒ page 333*

  - – Engage the fasteners -2- (4x) in the plastic sleeves -3- (4x).
  - – Press down the rear seat bench -1-.

2 - Fasteners (4x)

3 - Plastic sleeves (4x)

- ❑ Replace

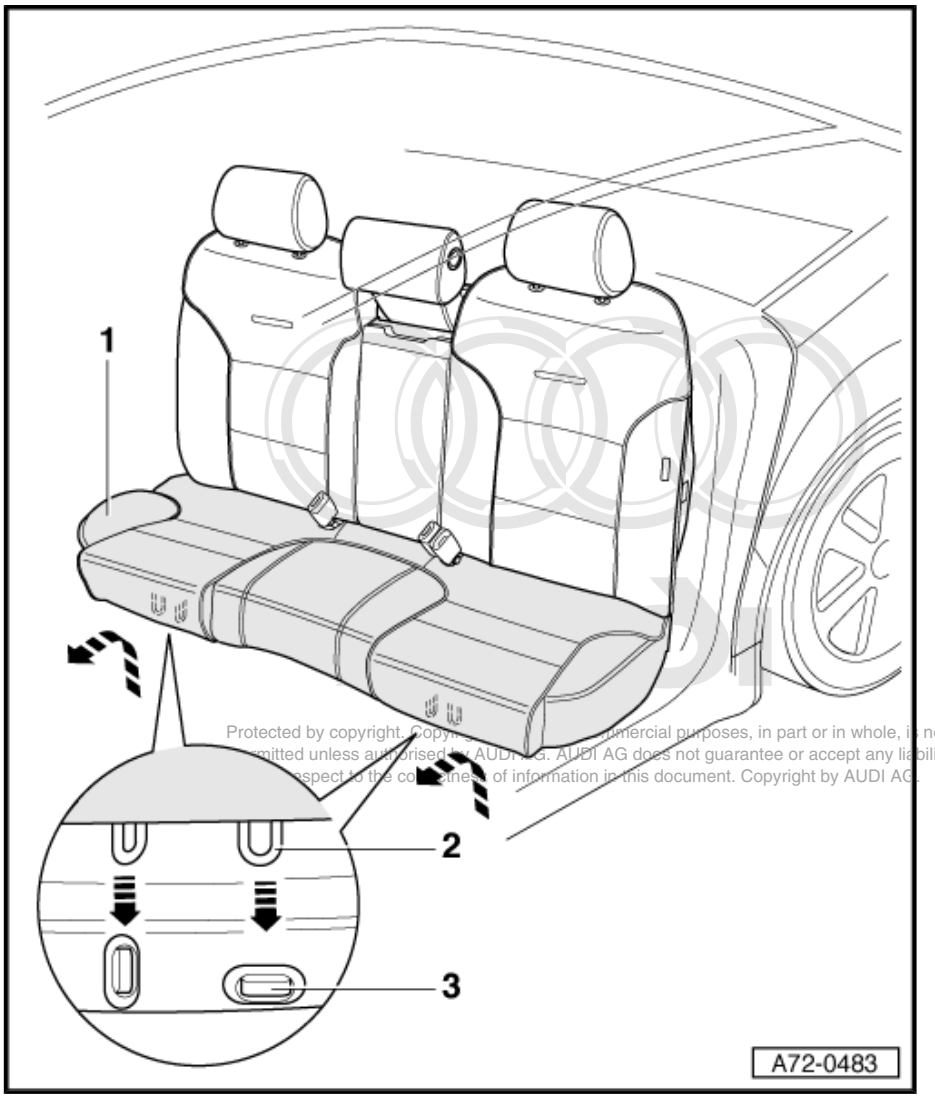

Protected by copyright. Copyright by AUDI AG. Commercial purposes, in part or in whole, is not permitted unless authorised by AUDI AG. AUDI AG does not guarantee or accept any liability with respect to the correctness of information in this document. Copyright by AUDI AG.

Replacing plastic sleeves (4x)

- – Take the old mounting sockets out of the body opening.
- – Insert the new mounting sockets -2- in the body opening -1- until they are heard to engage.

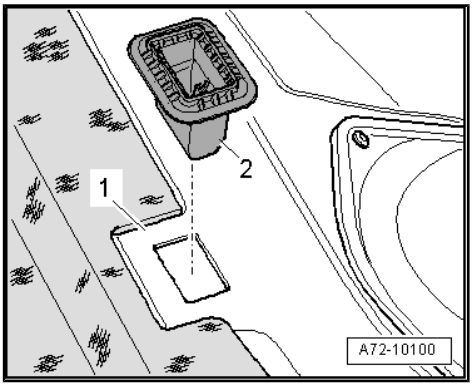

2.2 Removing and installing rear seat backrest

1 - Centre mount (4x)

2 - Centre head restraint

3 - Rear seat backrest

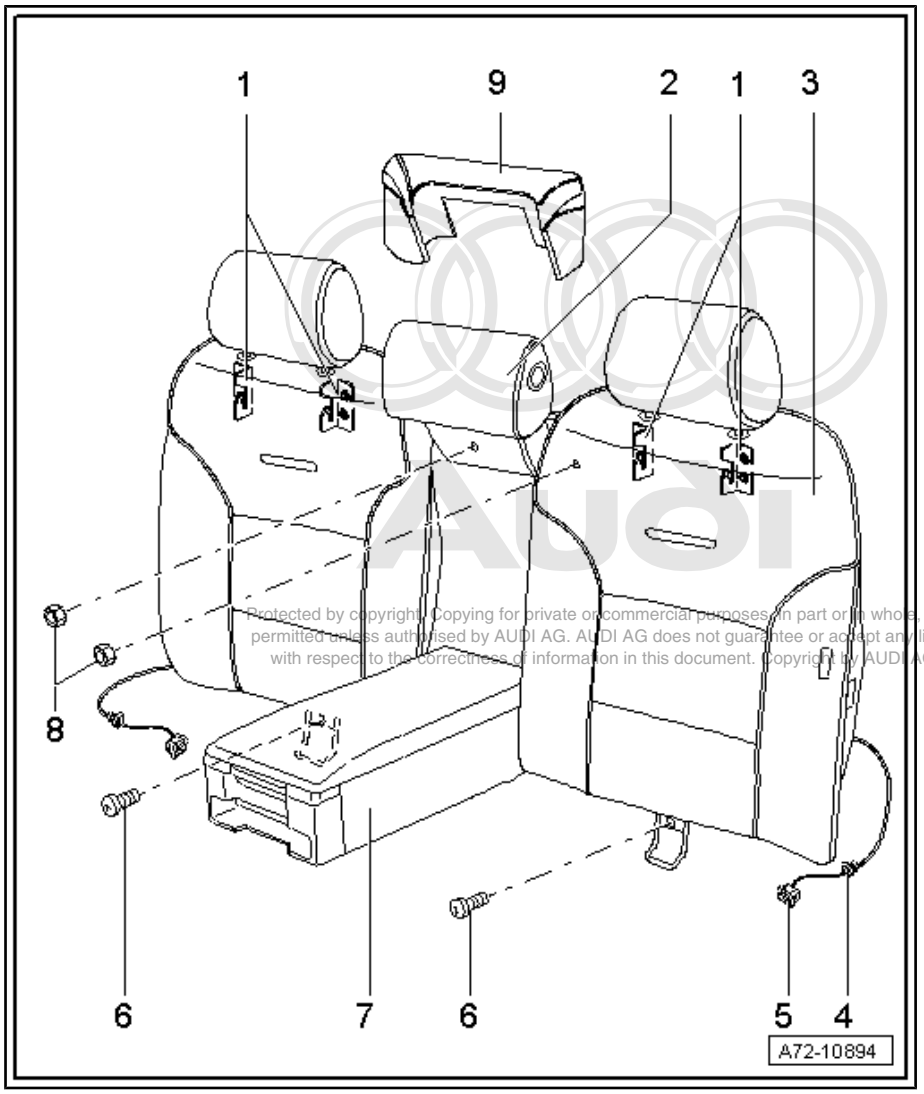

Protected by copyright. Copying for private or commercial purposes, in part or in whole, is not permitted unless authorised by AUDI AG. AUDI AG does not guarantee or accept any liability with respect to the correctness of information in this document. Copyright by AUDI AG.

♦ Removing

> ⚠ **WARNING**
> *Heed the safety regulations for pyrotechnic components* *⇒ page 94* *.*

- With the ignition switched on, disconnect the battery earth wire ⇒ Electrical system; Rep. gr. 27 .
- Remove the rear seat bench ⇒ page 333 .
- Unplug the side airbag connectors -4- (2x) ⇒ page 335 .
- Seat heating: Unplug the seat heating connectors -5- (2x).
- Attach the airbag adapter -VAS 6229- to the connectors -4- and -5-.

> ⚠ **WARNING**
> *Leave the airbag adapter -VAS 6229- connected to the seat until the seat has been re-installed.*

- Unscrew the bolts -6- (2x).
- Pull the centre head restraint -2- upwards.
- Fold down the centre armrest -7-.
- Unclip the rear shelf trim -9- upwards.
- Unscrew the nuts -8- (2x).
- Slide the rear seat backrest -3- upwards out of the centre mounts -1- (4x) and pull out the rear seat backrest -3- to the front.

♦ Installing

- Engage the rear seat backrest -3- in the centre mounts -1- (4x).
- Continue installing the rear seat backrest -3- in the reverse order of removal.
- With the ignition switched on, connect the battery earth wire ⇒ Electrical system; Rep. gr. 27 .

> ℹ **Note**
>
> *If the airbag warning lamp -K75- indicates a fault following installation, the event recorder must be interrogated, erased and interrogated again ⇒ Vehicle diagnostic tester.*

4 - Side airbag connector

5 - Seat heating connector

6 - Bolts (2x)

7 - Centre armrest

8 - Nuts (2x)

9 - Rear shelf trim

Side airbag connector

> ⚠ WARNING
>
> *Heed the safety regulations for pyrotechnic components* *⇒ page 94* *.*

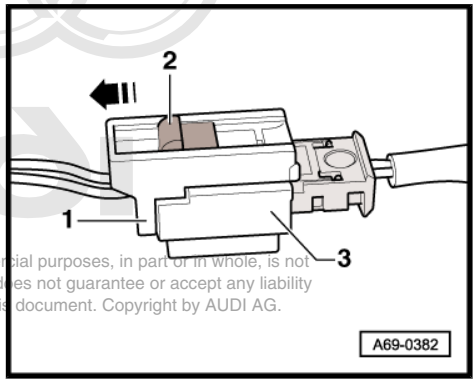

– With the ignition switched on, disconnect the battery earth wire ⇒ Electrical system; Rep. gr. 27 .

– One connector each is provided on the left and right beneath the rear seat bench.

– Press the retainer tab -2- in arrow direction and unplug the connector -1-.

– Secure the loose connectors with cable ties.

Reproduction or distribution for commercial purposes, in part or in whole, is not permitted unless authorised by AUDI AG. AUDI AG does not guarantee or accept any liability with respect to the correctness of information in this document. Copyright by AUDI AG.

2.3 Removing and installing centre armrest

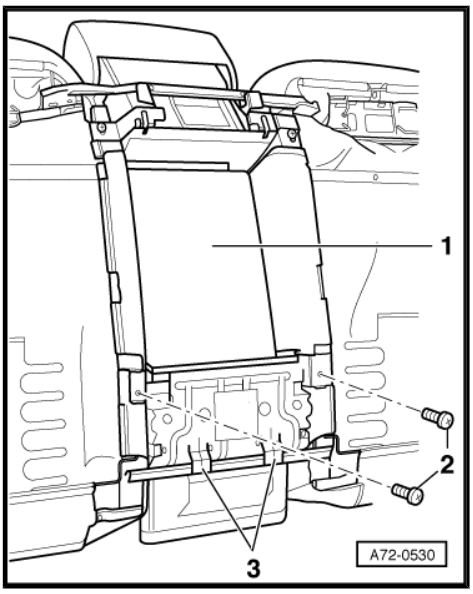

♦ Removing

– Remove the rear seat bench ⇒ page 333 .

– Remove the rear seat backrest ⇒ page 334 .

– Unscrew the bolts -2- (2x).

– Disengage the centre armrest -1- from the holders -3- (2x).

♦ Installing

– Install the centre armrest -1- in the reverse order of removal.

2.4 Dismantling centre armrest

♦ Removing

– Remove the rear seat bench ⇒ page 333 .

– Remove the rear seat backrest ⇒ page 334 .

– Remove the centre armrest ⇒ page 335 .

– Unscrew the bolts -3- (4x).

– Prise the holder -1- out of the guides -2- (4x).

– Detach the holder -1-.

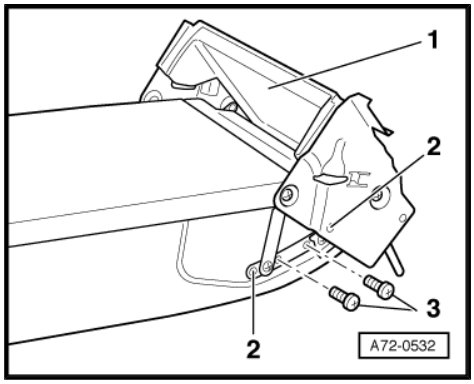

– Unfasten the trim -1- at the clips -3- (6x) and remove from the holder -2-.

♦ Installing

– Assemble the centre armrest in the reverse order of removal.

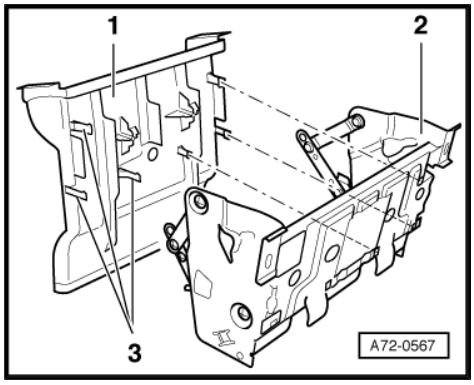

2.5 Removing and installing cup holder

♦ Removing

– Use a screwdriver to prise out the trim -1- at the guides -2- (2x).

– Use a screwdriver to prise out the cup holder -3- at the guides -4- (2x) and pull out the cup holder -3- to the front.

♦ Installing

– Install the cup holder -3- in the reverse order of removal.

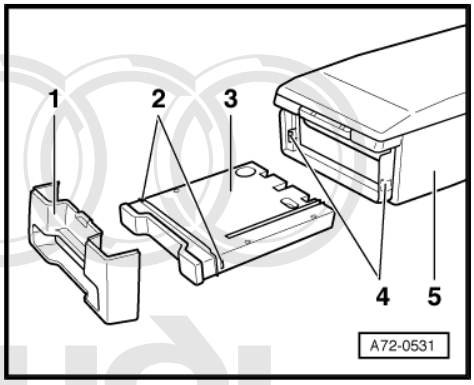

2.6 Removing and installing centre mount

Special tools and workshop equipment required

♦ Torque wrench -V.A.G 1410/-

Protected by copyright. Copying for private or commercial purposes, in part or in whole, is not permitted unless authorised by AUDI AG. AUDI AG does not guarantee or accept any liability with respect to the correctness of information in this document. Copyright by AUDI AG.

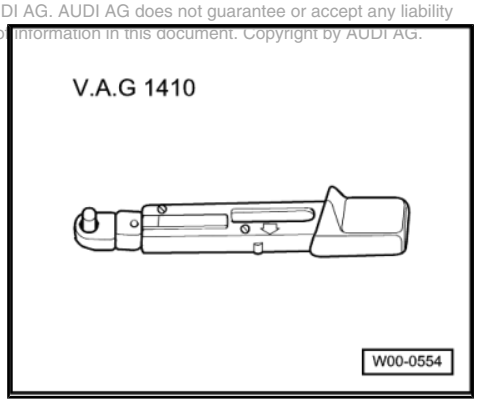

♦ Removing

– Remove the rear seat bench ⇒ page 333 .

– Remove the rear seat backrest ⇒ page 334 .

– Screw the bolts -2- (2x) out of the centre mount -1-.

♦ Tightening torque 8 Nm.

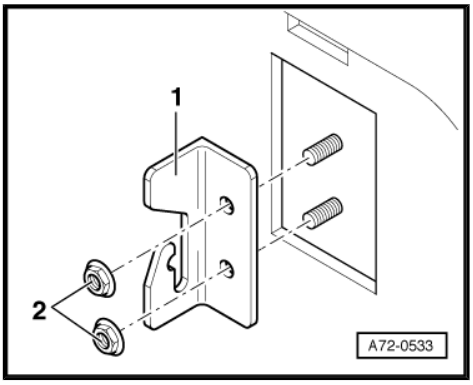

2.7 Removing and installing head restraints

Note

The rear left and right head restraints are not identical to the front head restraints. All head restraints are to be marked with adhesive tape on removal.

1 - Outer head restraints

– Press the button -2- and lift out the head restraint -1-.

2 - Button

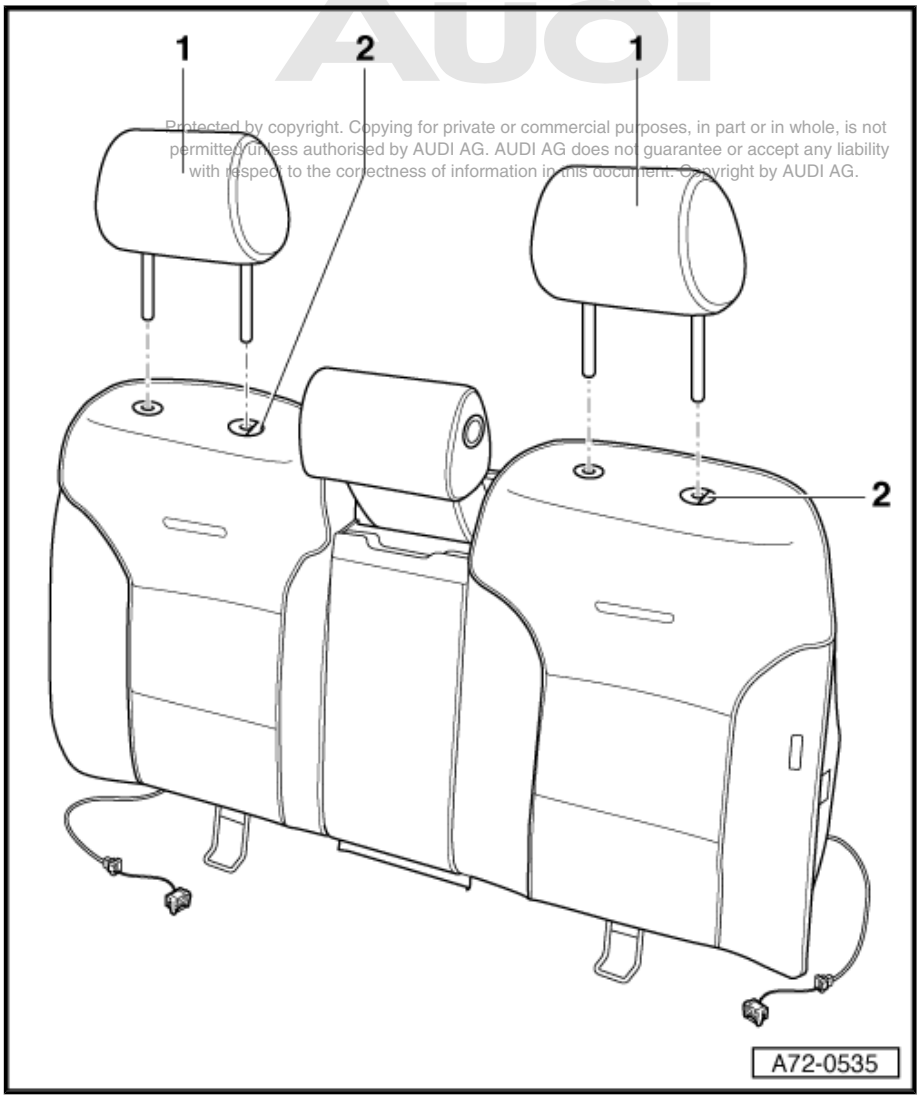

Protected by copyright. Copying for private or commercial purposes, in part or in whole, is not permitted unless authorised by AUDI AG. AUDI AG does not guarantee or accept any liability with respect to the correctness of information in this document. Copyright by AUDI AG.

2.8 Removing and installing centre head restraint

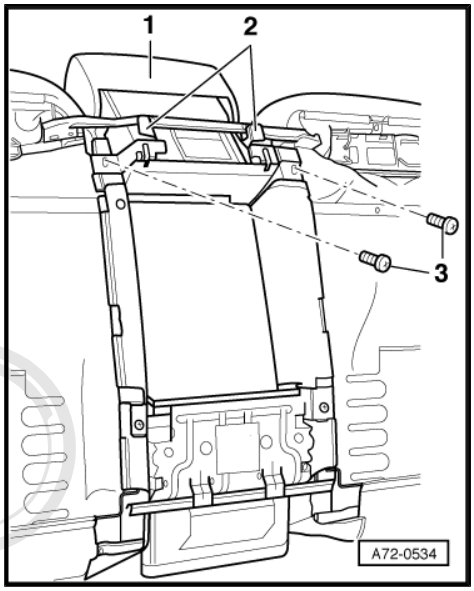

♦ Removing

– Remove the rear seat bench ⇒ page 333 .

– Remove the rear seat backrest ⇒ page 334 .

– Unscrew the bolts -3- (2x).

– Disengage the centre head restraint -1- downwards from the holders -2- (2x) and take out the centre head restraint -1-.

♦ Installing

– Install the centre head restraint -1- in the reverse order of removal.

2.9 Removing and installing centre head restraint blind

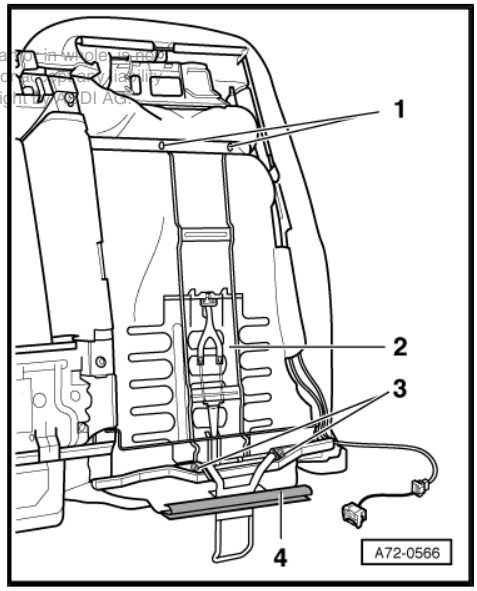

♦ Removing

– Remove the rear seat bench ⇒ page 333 .

– Remove the rear seat backrest ⇒ page 334 .

– Remove the centre head restraint ⇒ page 338 .

– Prise out the blind -2- on the left and right at the locations marked -1- (2x).

– Disengage the blind -2- on the left and right at the locations marked -3- (2x) and detach the blind -2-.

Protected by copyright. Copying for private or commercial purposes, in part or in whole, is not permitted unless authorised by AUDI AG. AUDI AG does not guarantee or assume any liability with respect to the correctness of information in this document. Copyright by AUDI AG.

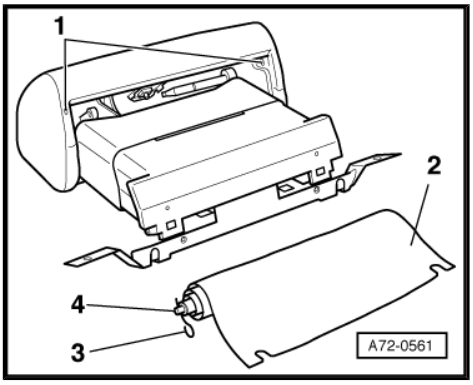

♦ Installing

– If the old blind is re-installed:

– Roll up the blind -2-.

– Hold the pin -4- with pliers and turn the blind 14-15 times in the direction opposite to extension direction -arrow-.

– Press in the pin -4- and secure the pin -4- with a paper clip for example.

– Engage the blind -2- in the guides -1-. Start on the side with locking element.

– Make sure the blind is properly engaged on both sides.

– Pull out the locking element -3-.

– Check operation of the blind. At least 3/4 retraction

2.10 Dismantling centre head restraint

Protected by copyright. Copying or distribution of this document, in whole or in part or in whole, is not permitted unless authorised by AUDI AG. AUDI AG does not guarantee or accept any liability with respect to the correctness of information in this document. Copyright by AUDI AG.

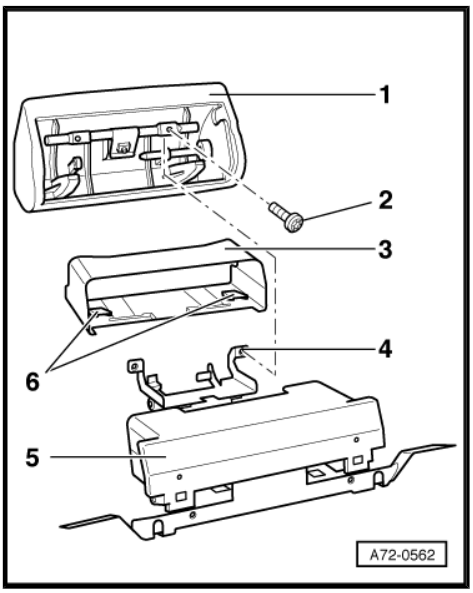

♦ Removing

– Remove the rear seat bench ⇒ page 333 .

– Remove the rear seat backrest ⇒ page 334 .

– Remove the centre head restraint ⇒ page 338 .

– Remove the centre head restraint blind ⇒ page 338 .

– Unscrew the bolts -2- (2x).

– Disengage the mount -5- at the holders -4- (2x) from the head restraint -1-.

– To remove the cover -3-: Unfasten the cover -3- upwards at the clips -6- (2x).

♦ Installing

– Install the centre head restraint -1- in the reverse order of removal.

2.11 Removing and installing slide-in locking mechanism for centre head restraint

♦ Removing

– Remove the rear seat bench ⇒ page 333 .

– Remove the rear seat backrest ⇒ page 334 .

– Remove the centre head restraint ⇒ page 338 .

– Remove the centre head restraint blind ⇒ page 338 .

– Remove the centre head restraint mount ⇒ page 339 .

– Press the button -3- from inside out of the head restraint -1-.
– Pull out the trim plate -2-.
♦ Installing
– Install the slide-in locking mechanism in the reverse order of removal.

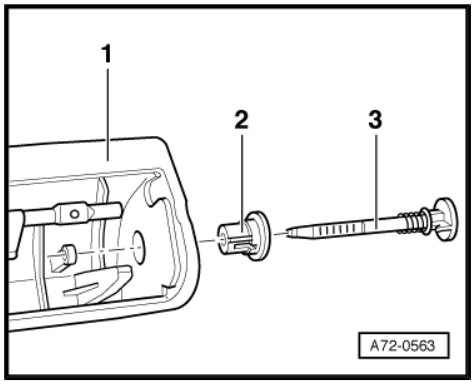

2.12 Removing and installing backrest mat

♦ Removing
– Remove the rear seat bench ⇒ page 333 .
– Remove the rear seat backrest ⇒ page 334 .
– Use a screwdriver to prise out the fastening strip -4-.
– Disengage the top of the backrest mat -2- at the studs -1- (2x).
– Disengage the bottom of the backrest mat -2- at the holders -3- (2x).
– Take out the backrest mat -1-.
♦ Installing
– Install the backrest mat -1- in the reverse order of removal.

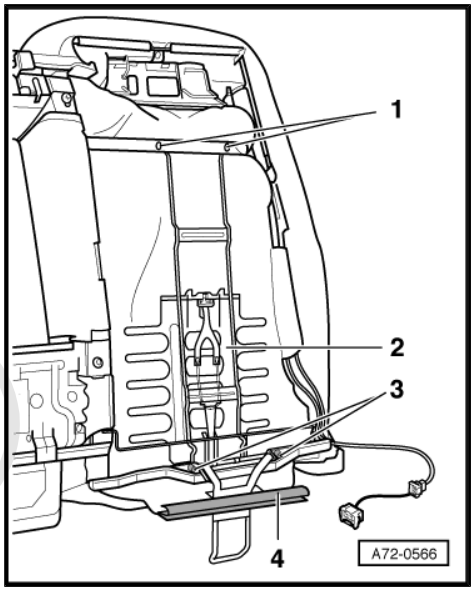

Protected by copyright. Copying for private or commercial purposes, in part or in whole, is not permitted unless authorised by AUDI AG. AUDI AG does not guarantee or accept any liability with respect to the correctness of information in this document. Copyright by AUDI AG.

3 Electrically operated individual rear seats

3.1 Exploded view of electrically operated individual rear seat components

1 - Backrest ⇒ page 343

2 - Isofix holder ⇒ page 173

3 - Rear outer seat belt anchorage point ⇒ page 358

4 - Seat pan ⇒ page 342

5 - Seat centre section front holder with fastener ⇒ page 344

6 - Seat centre section ⇒ page 341

7 - Seat centre section rear holder ⇒ page 344

8 - Belt buckle ⇒ page 116

9 - Backrest centre section ⇒ page 345 ; backrest centre section release handle ⇒ page 345

10 - Rear shelf trim ⇒ page 346

11 - Filler piece ⇒ page 346

12 - Head restraint ⇒ page 358

13 - Backrest holder ⇒ page 344

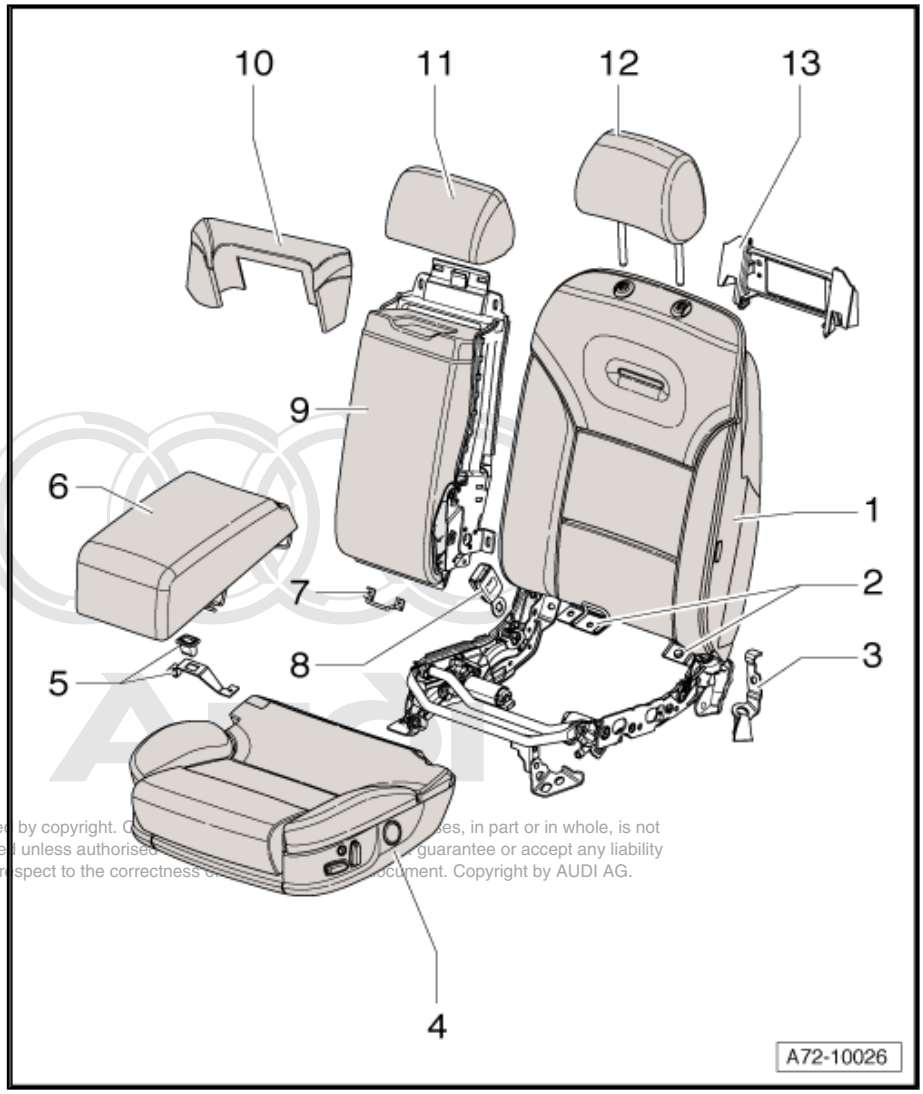

Protected by copyright. Copying or distribution of this document, in part or in whole, is not permitted unless authorised by AUDI AG. AUDI AG does not guarantee or accept any liability with respect to the correctness of the information in this document. Copyright by AUDI AG.

3.2 Removing and installing centre section

◆ Removing

– Pull the centre section -1- upwards in arrow direction and out in the direction of travel.

◆ Installing

– Install the centre section -1- in the reverse order of removal.

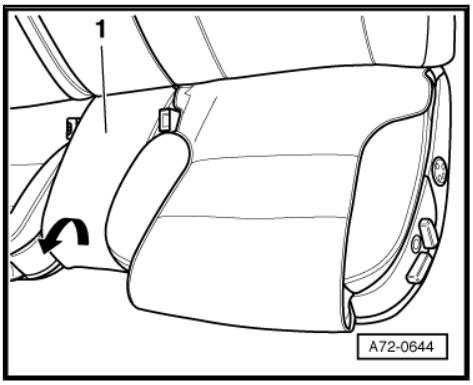

3.3 Removing and installing seat pan

1 - Individual rear seat

2 - Seat pan

♦ Removing

- Move the seat angle adjuster to the top position and the longitudinal adjuster to the centre position.
- Reach beneath the seat on the sill panel side and feel for the lever -3-.
- Press the lever -3- and pull the seat pan -2- upwards.
- Unplug the connector beneath the seat pan -2-.
- Disengage the seat pan -2- in the direction of travel from the individual rear seat -1-.

♦ Installing

- Engage the seat pan -2- on the left and right in the individual rear seat -1- ⇒ page 342
- Press down the seat pan -2- until it engages at the front.

3 - Lever

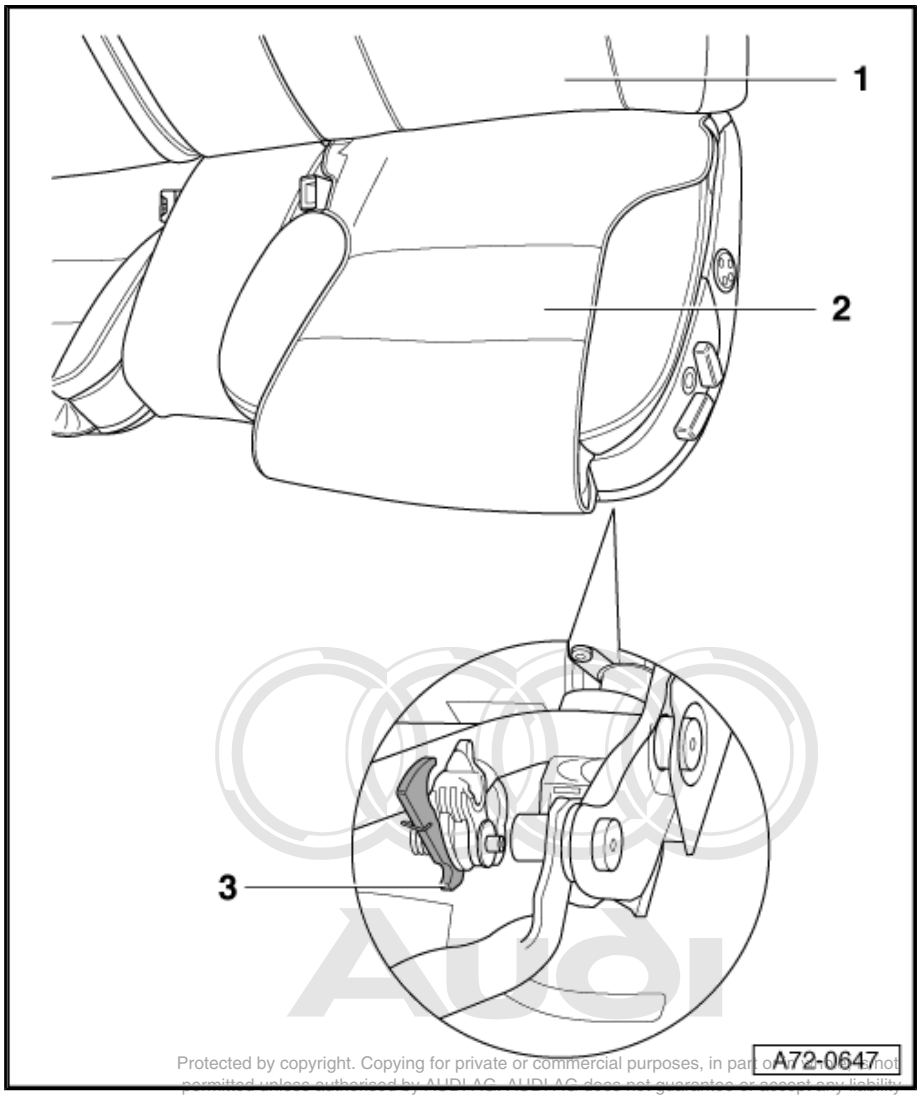

Protected by copyright. Copying for private or commercial purposes, in part or in whole, is not permitted unless authorised by AUDI AG. AUDI AG does not guarantee or accept any liability with respect to the correctness of information in this document. Copyright by AUDI AG.

Rear seat pan attachment

Note

The guide -1- (2x) must always be replaced following removal.

On installation, the seat pan must engage at the rear in the guide -1- on the left and right.

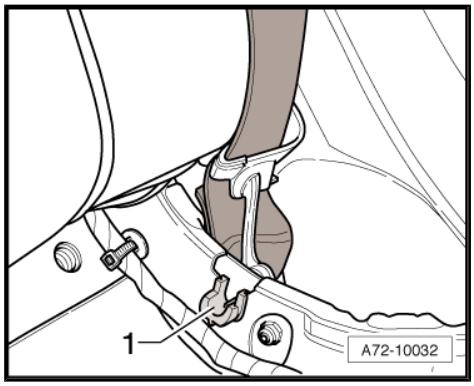

3.4 Removing and installing individual rear seat

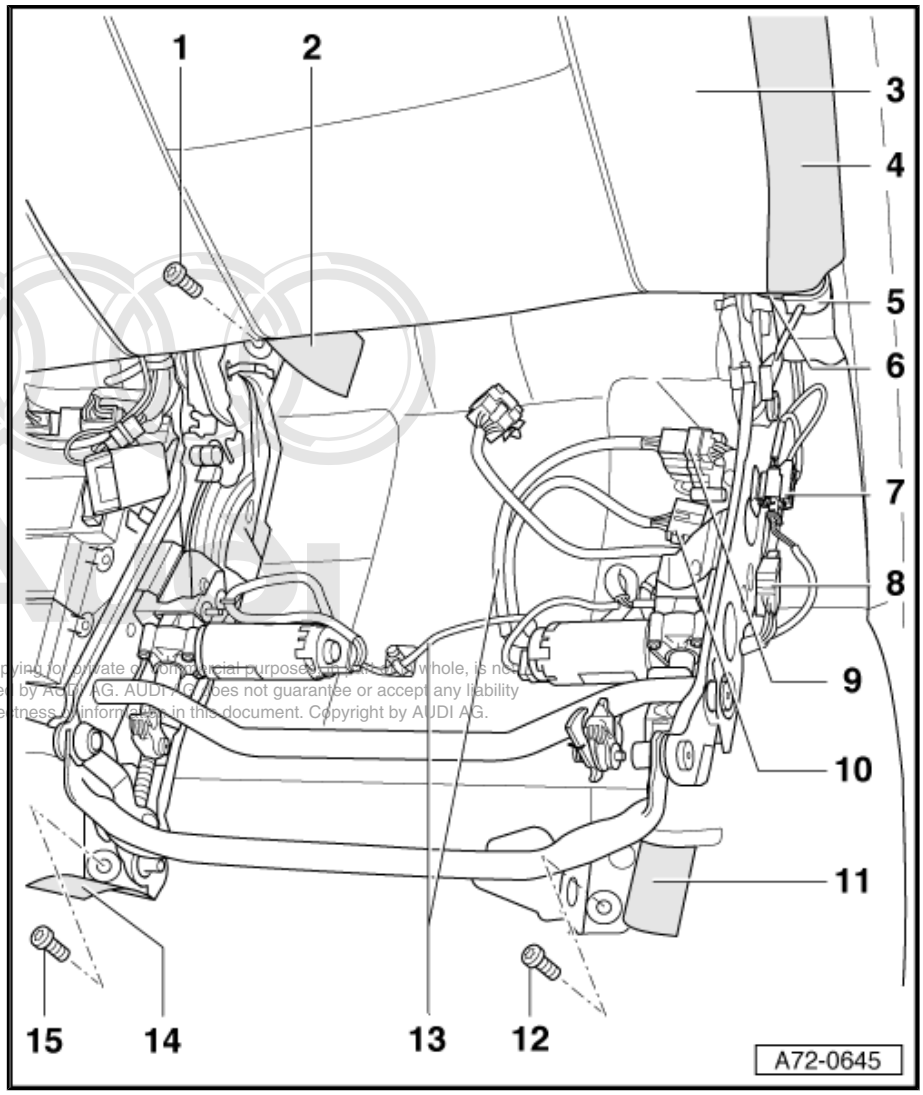

1 - Bolt

- ❑ Tightening torque 55 Nm

2 - Tab

3 - Individual rear seat

♦ Removing

- – Remove the seat pan ⇒ page 342 .
- – Unplug the connectors -7-, -8-, -9- and -10-.
- – Detach the wiring harness -13- from the body.
- – Raise the tab -11- and unscrew the bolt -12-.
- – Raise the tab -14- and unscrew the bolt -15-.
- – Pull the tab -2- aside and unscrew the bolt -1-.
- – Open the webbing guide -5- at the clip -6-.
- – Thread the webbing -4- out of the guide -5-.
- – Unscrew the bolt at the anchorage point of the webbing -4- ⇒ page 358 .
- – Pull the seat frame forwards until the backrest slides out of its guide.
- – Lift the individual rear seat -3- out of the vehicle.

♦ Installing

- – Install the individual rear seat -3- in the reverse order of removal.
- – Make sure the individual rear seat -3- engages on the left and right at the sliders in the guides in the body.

This document is copyrighted. Copying for private or commercial purposes, in part or in whole, is not permitted unless authorised by AUDI AG. AUDI AG does not guarantee or accept any liability with respect to the correctness of information in this document. Copyright by AUDI AG.

4 - Webbing

5 - Webbing guide

6 - Clip

7 - Connector

8 - Connector

9 - Connector

10 - Connector

11 - Tab

12 - Bolt

- ❑ Tightening torque 55 Nm

13 - Wiring harness

14 - Tab

15 - Bolt

- ❑ Tightening torque 55 Nm

16 - Tab

17 - Bolt

3.5 Removing and installing backrest holder

– Remove the seat pan ⇒ page 342 .

– Remove the backrest ⇒ page 343 .

– Unscrew the nuts -2- (4x). Tightening torque 8 Nm

– Detach the backrest holder -1-.

3 - Felt pad

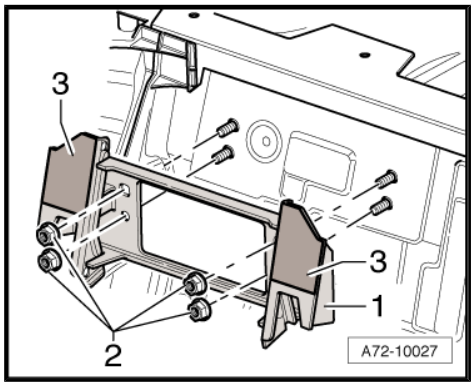

3.6 Seat centre section holders

Seat centre section front holder

– Remove the seat centre section ⇒ page 341 .

– Unscrew the nuts -2- (2x). Tightening torque 4.5 Nm.

– Detach the seat centre section front holder -1-.

3 - Fastener

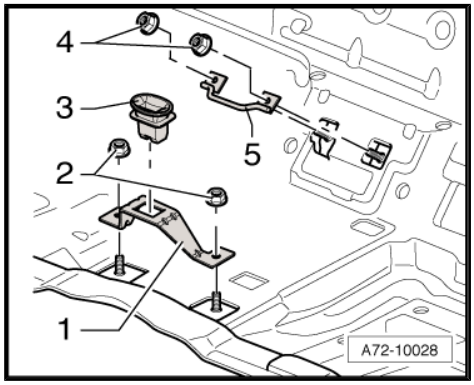

Protected by copyright. Copying for private or commercial purposes, in part or in whole, is not permitted unless authorised by AUDI AG. AUDI AG does not guarantee or accept any liability with respect to the correctness of information in this document. Copyright by AUDI AG.

Seat centre section rear holder

– Remove the seat centre section ⇒ page 341 .

– Unscrew the nuts -4- (2x). Tightening torque 4.5 Nm.

– Detach the seat centre section rear holder -5-.

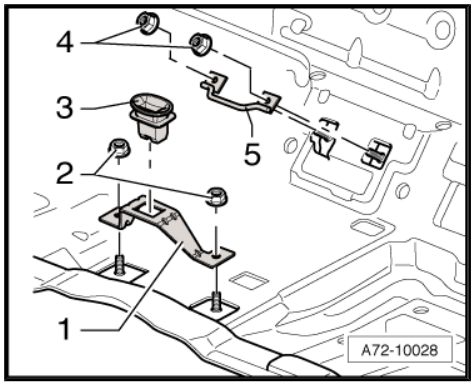

3.7 Removing and installing backrest centre section

– Remove the left and right individual rear seats ⇒ page 343 .
– Remove the filler piece ⇒ page 346 .
– Remove the rear shelf trim ⇒ page 346 .
– Unscrew the nuts -2- (4x). Tightening torque 8 Nm.
– Take out the backrest centre section -1-.

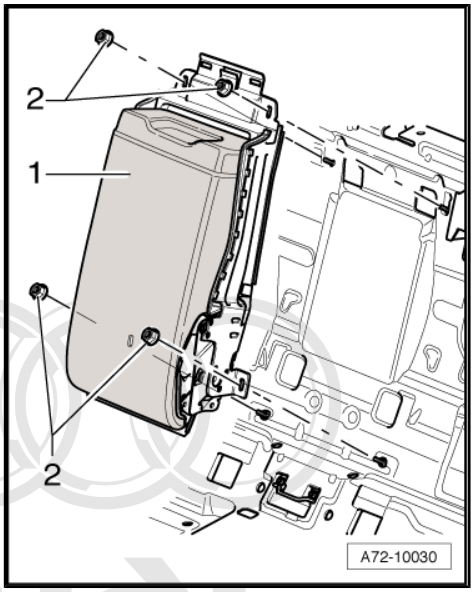

3.8 Removing and installing release handle for backrest centre section

Protected by copyright. Copying for private or commercial purposes, in part or in whole, is not permitted unless authorised by AUDI AG. AUDI AG does not guarantee or accept any liability with respect to the correctness of information in this document. Copyright by AUDI AG.

Note

For greater clarity, the release handle for the backrest centre section has been removed in the illustration.

Removing

– Use a flat screwdriver to carefully press the lugs -2- out of the holes -3-.
– Disengage the spring -4- from the mounts -5-.
– Detach the release handle -1-.

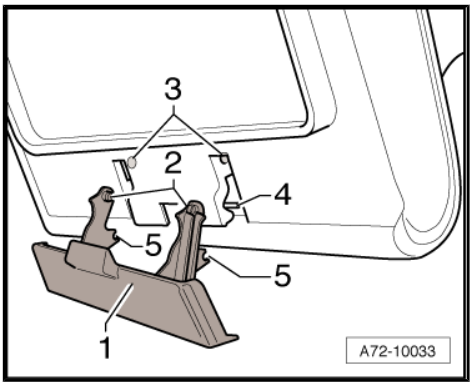

Installing

– Carefully guide the lugs -2- into the holes -3-.
– Engage the spring -4- in the mounts -5-.

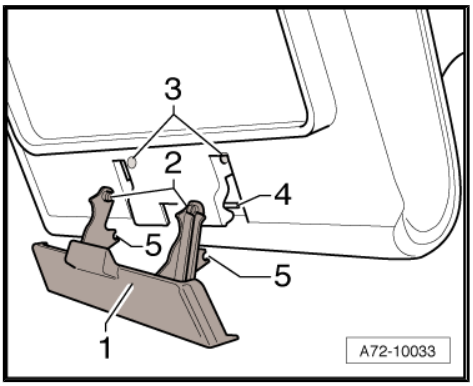

3.9 Removing and installing rear shelf trim and filler piece

Removing filler piece

– Press the filler piece -3- upwards out of the holder -2-.

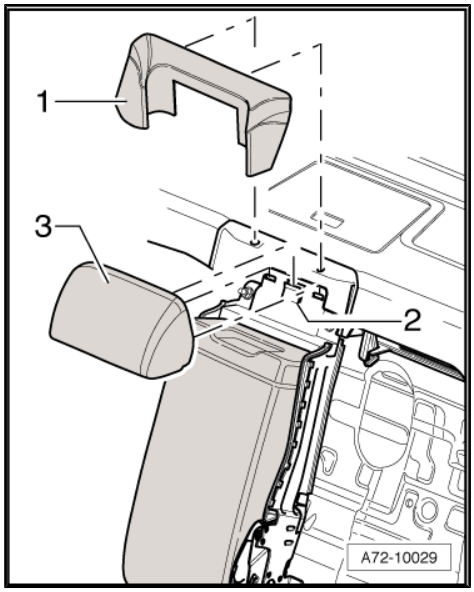

Removing rear shelf trim

Filler piece -3- removed

– Unclip the rear shelf trim -1-.

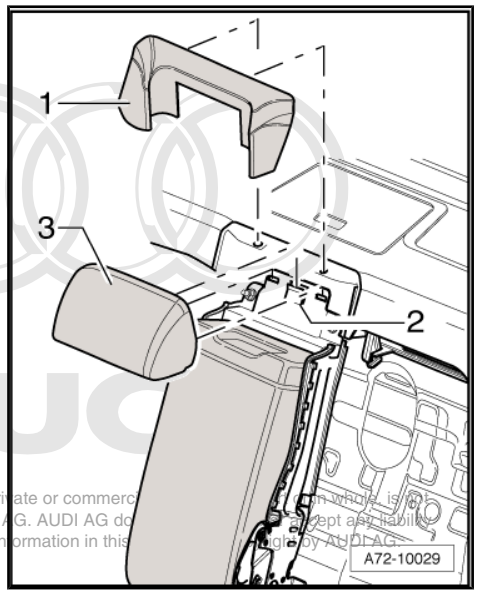

Protected by copyright. Copying for private or commerc
permitted unless authorised by AUDI AG. AUDI AG do
with respect to the correctness of information in this

3.10 Removing and installing mounting plate for control units

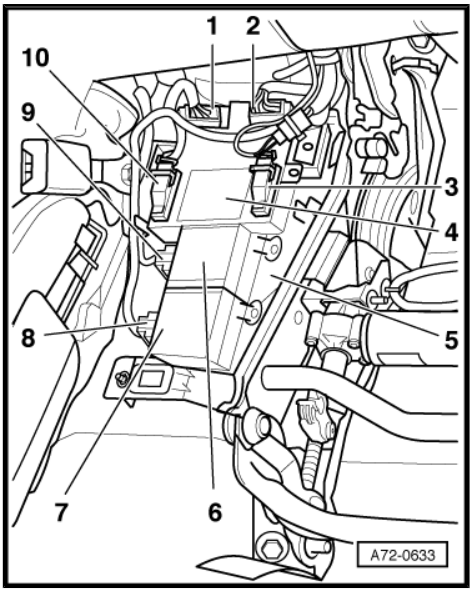

Note

- *Seat adjustment control unit -4-: Connectors -1- and -10- right seat, connectors -2- and -3- left seat.*
- *Control unit -6-: for right seat ventilation.*
- *Control unit -7-: for left seat ventilation.*

- Removing
  - Vehicles with centre console extension: Remove the centre console extension ⇒ page 59 .
  - Vehicles with no centre console extension: Remove the centre section ⇒ page 341 .
  - Unplug the connectors -1-, -2-, -3- and -10- at the seat adjustment control unit -4-.
  - Unplug the connector -9- at the right seat ventilation control unit -6-.
  - Unplug the connector -8- at the left seat ventilation control unit -7-.
  - Lift out the mounting plate -5-.
- Installing
  - Install the mounting plate -5- in the reverse order of removal.

3.11 Separating rear seat adjustment with memory control unit -J522- from mounting plate

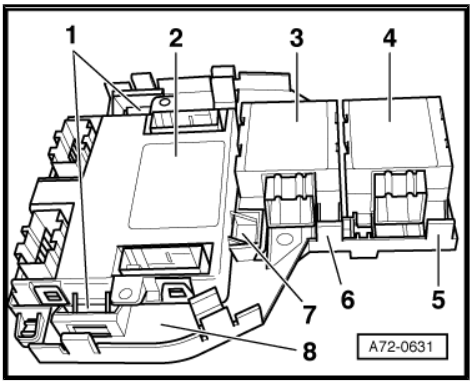

- Removing
  - Vehicles with centre console extension: Remove the centre console extension ⇒ page 59 .
  - Vehicles with no centre console extension: Remove the centre section ⇒ page 341 .
  - Remove the mounting plate for control units ⇒ page 347 .
  - Prise out the clips -1- (2x) and -7-.
  - Take out the control unit -2-.
- Installing
  - Press the control unit -2- into the mounting plate -8-.

Protected by copyright. Copying for private or commercial purposes, in part or in whole, is not permitted unless authorised by AUDI AG. AUDI AG does not guarantee or accept any liability with respect to the correctness of information in this document. Copyright by AUDI AG.

3.12 Separating driver side -J674- and front passenger side -J675- rear seat ventilation control unit from mounting plate

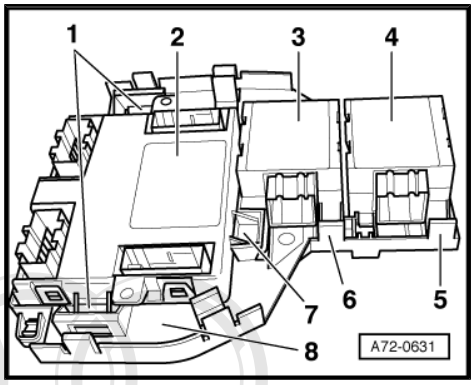

- ♦ Removing
- – Vehicles with centre console extension: Remove the centre console extension ⇒ page 59 .
- – Vehicles with no centre console extension: Remove the centre section ⇒ page 341 .
- – Remove the mounting plate for control units ⇒ page 347 .

To remove the left seat ventilation control unit -4-:

- – Prise out the clip -5-.
- – Take out the control unit -4-.

To remove the right seat ventilation control unit -3-:

- – Prise out the clip -6-.
- – Take out the control unit -3-.
- ♦ Installing
- – Press the control unit -3- or -4- into the mounting plate -8-.

Protected by copyright. Copying for private or commercial purposes, in part or in whole, is not permitted unless authorised by AUDI AG. AUDI AG does not guarantee or accept any liability with respect to the correctness of information in this document. Copyright by AUDI AG.

3.13 Removing and installing side trim on sill panel side

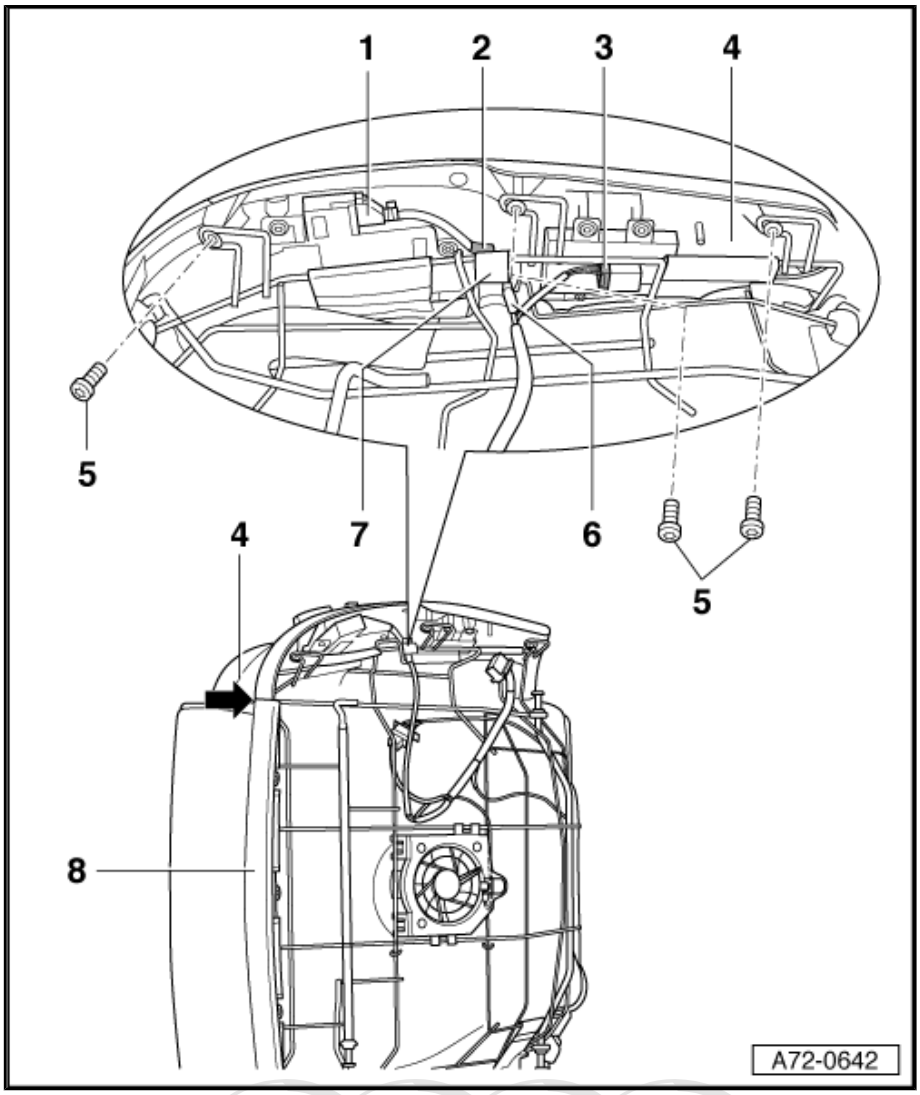

1 - Connector

2 - Clip

3 - Connector

4 - Side trim, sill panel side

♦ Removing

- Remove the seat pan ⇒ page 342 .
- Disengage the front trim -8- at the location marked with an arrow from the side trim on the sill panel side -4-.
- Unscrew the bolts -5- (3x).
- Use a screwdriver to prise the clip -2- out of the side trim on the sill panel side -4-.
- Unplug the connectors -1- and -3-.
- Pull off the side trim on the sill panel side -4- to the rear.

♦ Installing

- Install the side trim on the sill panel side -4- in the reverse order of removal.
- Make sure the wiring harness -6- is positioned behind the fastening strip -7-.

5 - Bolts (3x)

❑ Tightening torque 2.5 Nm.

6 - Wiring harness

7 - Fastening strip

8 - Front trim

Protected by copyright. Copying for private or commercial purposes, in part or in whole, is not permitted unless authorised by AUDI AG. AUDI AG does not guarantee or accept any liability with respect to the correctness of information in this document. Copyright by AUDI AG.

3.14 Removing and installing lumbar support adjustment switch

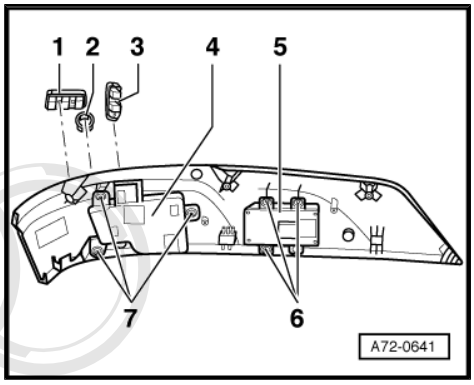

- ♦ Removing
- – Remove the seat pan ⇒ page 342 .
- – Remove the side trim on the sill panel side ⇒ page 349 .
- – Unscrew the bolts -6- (4x). 1 Nm.
- – Detach the lumbar support adjustment switch -5-.
- ♦ Installing
- – Install the lumbar support adjustment switch in the reverse order of removal.

3.15 Removing and installing seat adjustment switch

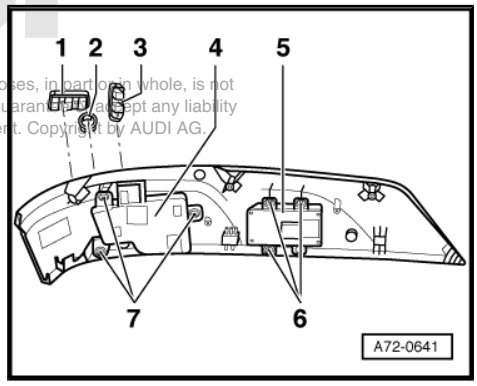

- ♦ Removing
- – Remove the seat pan ⇒ page 342 .
- – Remove the side trim on the sill panel side ⇒ page 349 .
- – Detach the switch controls -1- and -3- and the trim plate -2-.
- – Unscrew the bolts -7- (3x). 1 Nm.
- – Detach the seat adjustment switch -4-.
- ♦ Installing
- – Install the seat adjustment switch in the reverse order of removal.

Protected by copyright. Copying for private or commercial purposes, in part or in whole, is not permitted unless authorized by AUDI AG. AUDI AG does not guarantee or accept any liability with respect to the correctness of information in this document. Copyright by AUDI AG.

3.16 Removing and installing side trim on tunnel side

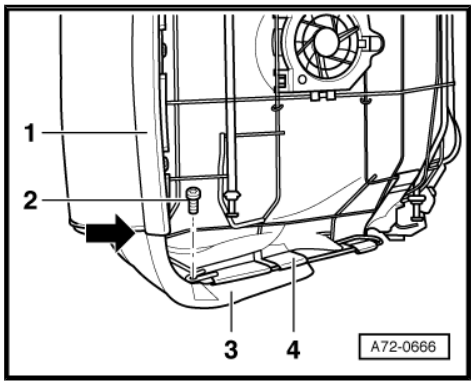

- ♦ Removing
- – Remove the seat pan ⇒ page 342 .
- – Disengage the front trim -1- at the location marked with an arrow from the side trim on the tunnel side -3-.
- – Unscrew the bolt -2-. 2.5 Nm.
- – Prise out the fastening strip -4-.
- – Pull off the side trim on the tunnel side -3- to the rear.
- ♦ Installing
- – Install the side trim on the tunnel side -3- in the reverse order of removal.

3.17 Removing and installing front trim

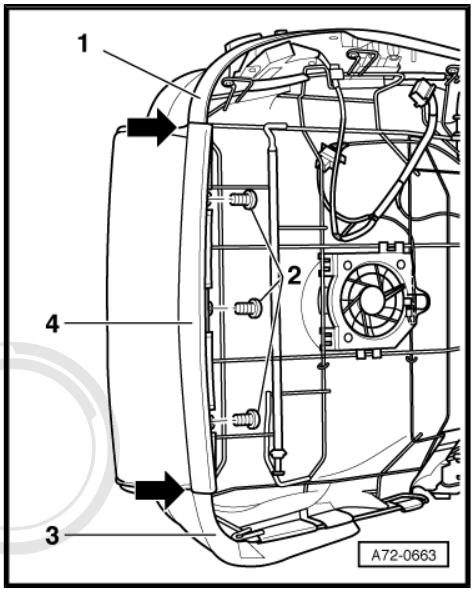

- ♦ Removing
- – Remove the seat pan ⇒ page 342 .
- – Disengage the front trim -4- at the locations marked with arrows (2x) from the side trim on the sill panel side -1- and the tunnel side -3-.
- – Unscrew the bolts -2- (3x). 2.5 Nm.
- – Detach the front trim -4-.
- ♦ Installing
- – Install the front trim -4- in the reverse order of removal.

3.18 Removing and installing seat ventilation unit (seat pan)

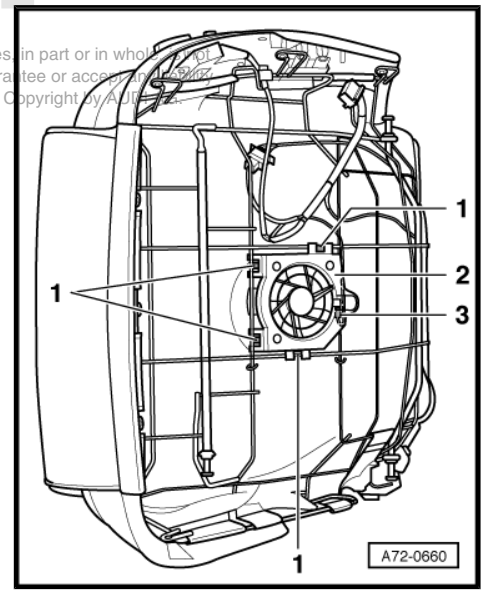

- ♦ Removing
- – Remove the seat pan ⇒ page 342 .
- – Unplug the connector -3-.
- – Unfasten the seat ventilation unit -2- at the clips -1- (4x).
- – Detach the seat ventilation unit -2-.
- ♦ Installing
- – Install the seat ventilation unit -2- in the reverse order of removal.

Protected by copyright. Copying for private or commercial purposes, in part or in whole, is not permitted unless authorised by AUDI AG. AUDI AG does not guarantee or accept any liability with respect to the correctness of information in this document. Copyright by AUDI AG.

3.19 Removing and installing seat ventilation unit (backrest)

Note

The rubber guide -3- is stitched to the padding -4-. The padding must be replaced if the rubber guide is defective.

1 - Rivets (2x)

2 - Seat ventilation unit

♦ Removing

– Remove the seat pan ⇒ page 342 .
– Remove the individual rear seat ⇒ page 343 .
– Unplug the connector -3-.
– Drill out the rivets -1- (2x).
– Detach the seat ventilation unit -2-.

♦ Installing

– Install the seat ventilation unit -2- in the reverse order of removal.

3 - Connector

4 - Padding

5 - Rubber guide

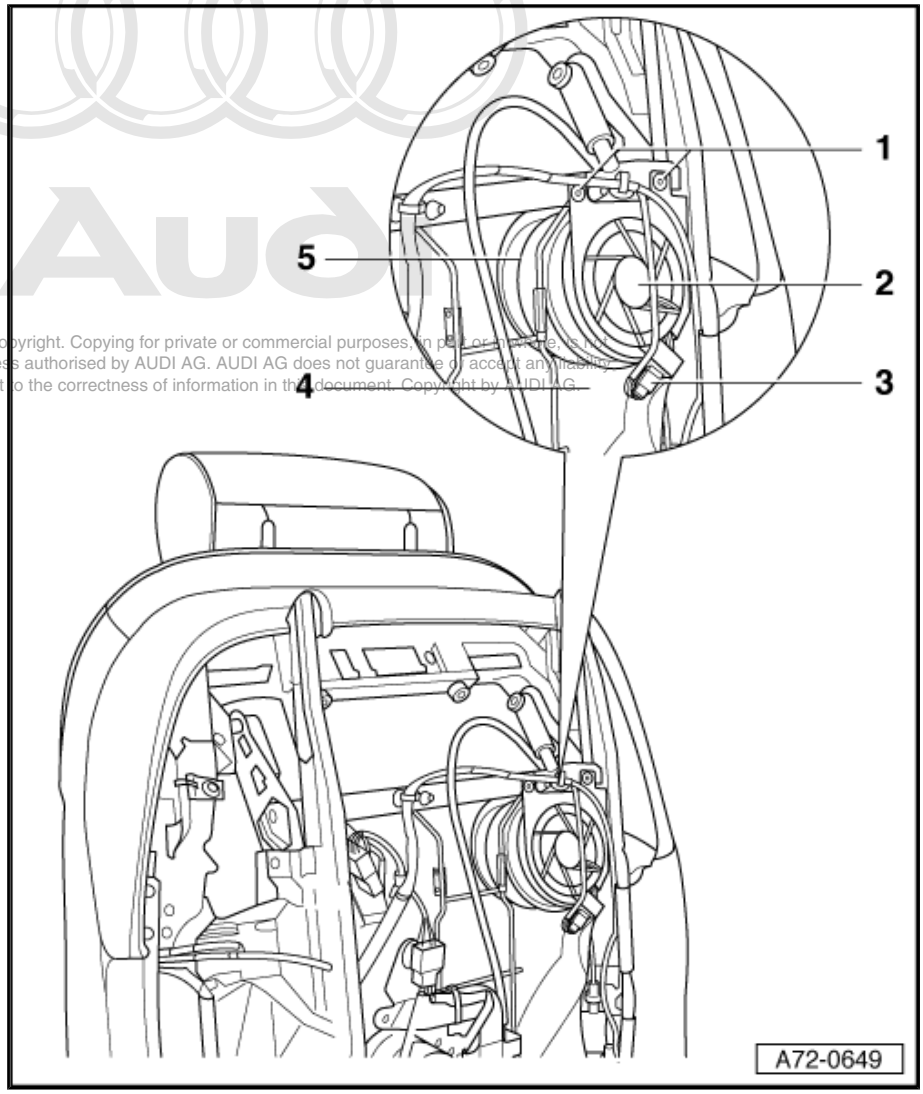

Protected by copyright. Copying for private or commercial purposes, in part or entirety, is not permitted unless authorised by AUDI AG. AUDI AG does not guarantee or accept any liability with respect to the correctness of information in this document. Copyright by AUDI AG.

3.20 Removing and installing rear left seat -V227- and rear right seat -V228- rake adjustment motor

1 - Pin

2 - Spring lock washer

3 - Bolts (4x)

4 - Connector

5 - Rear left seat -V227- and rear right seat -V228- rake adjustment motor

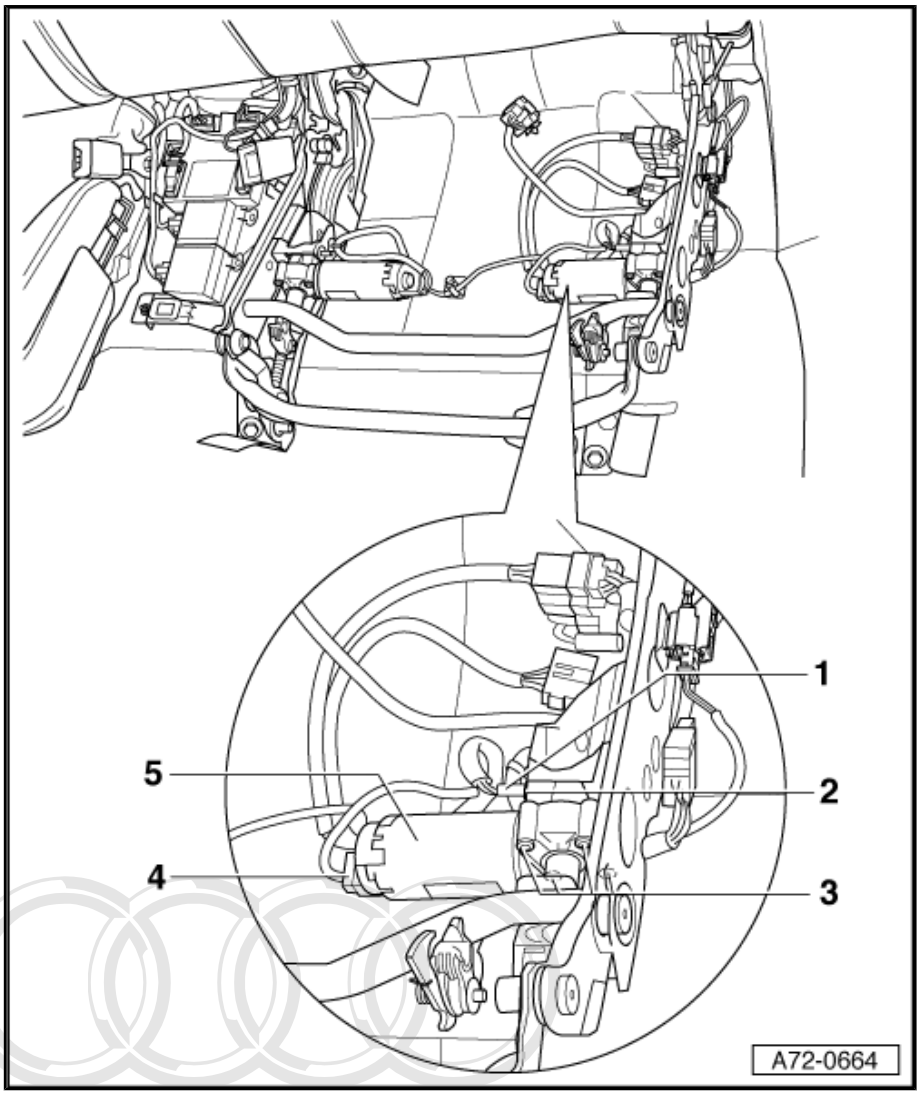

- ♦ Removing
  - – Remove the seat pan ⇒ page 342 .
  - – Remove the individual rear seat ⇒ page 343 .
  - – Unplug the connector -4-.
  - – Use a hammer to knock out the pin -1-.
  - – Unscrew the bolts -3- (4x).
  - – Take out the angle adjustment motor -5-.
- ♦ Installing
  - – Install the angle adjustment motor -5- in the reverse order of removal.
  - – Secure the pin -1- with a lock washer -2-.

Protected by copyright. Copying for private or commercial purposes, in part or in whole, is not permitted unless authorised by AUDI AG. AUDI AG does not guarantee or accept any liability with respect to the correctness of information in this document. Copyright by AUDI AG.

3.21 Removing and installing rear left seat -V87- and rear right seat -V88- longitudinal adjustment motor

1 - Pin

2 - Connector

3 - Rear left seat -V87- and rear right seat -V88- longitudinal adjustment motor

- Removing
  - Remove the seat pan ⇒ page 342 .
  - Remove the individual rear seat ⇒ page 343 .
  - Unplug the connector -2-.
  - Use a hammer to knock out the pin -1-.
  - Unscrew the bolts -4- (4x).
  - Take out the longitudinal adjustment motor -3-.
- Installing
  - Install the longitudinal adjustment motor -3- in the reverse order of removal.
  - Secure the pin -1- with a lock washer -5-.

4 - Bolts (4x)

5 - Spring lock washer

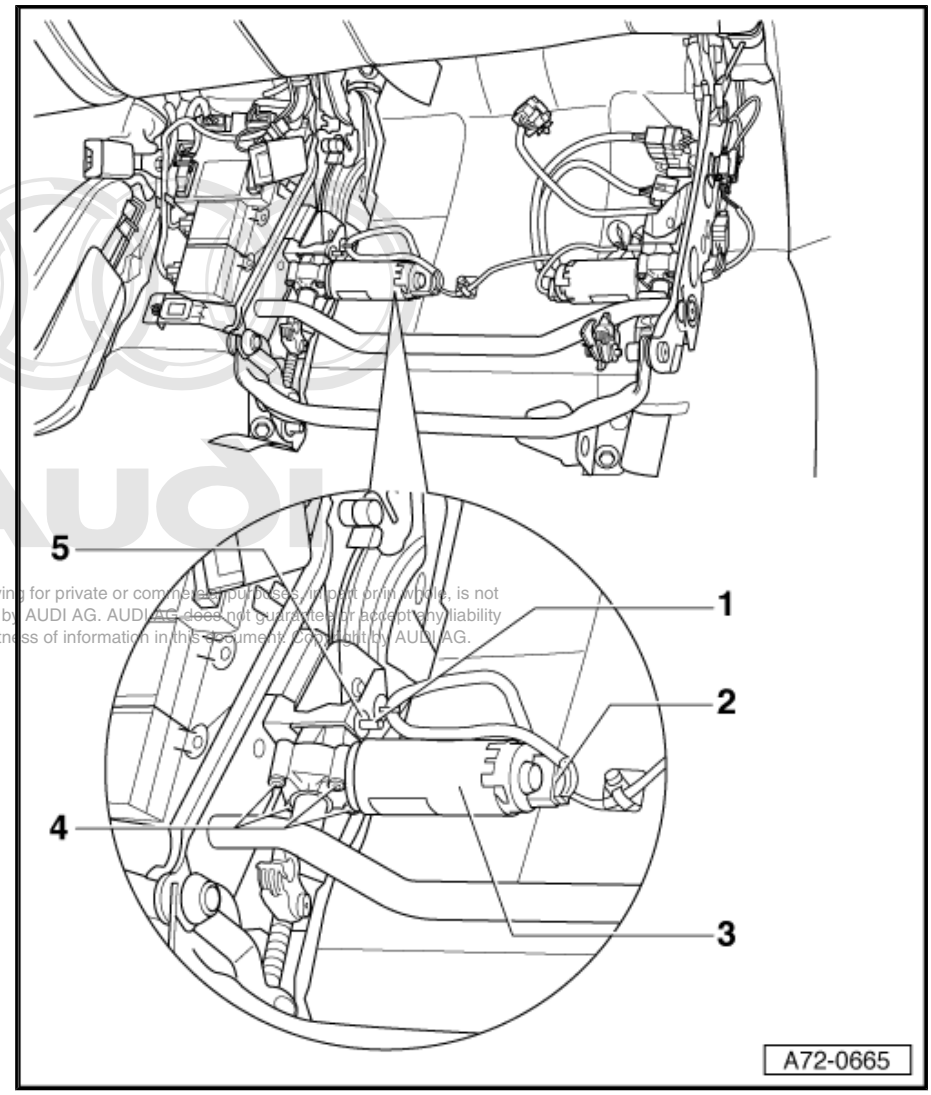

Protected by copyright. Copying for private or commercial purposes, in part or in whole, is not permitted unless authorised by AUDI AG. AUDI AG does not guarantee or accept any liability with respect to the correctness of information in this document. Copyright by AUDI AG.

3.22 Removing and installing upper backrest adjustment motor -V232-

1 - Bolts (2x)

❑ Tightening torque 6 Nm.

2 - Connector

3 - Backrest frame

4 - Upper backrest adjustment motor -V232-

♦ Removing

– Remove the seat pan ⇒ page 342 .
– Remove the individual rear seat ⇒ page 343 .
– Unclip the connector -2- from the backrest frame and unplug the connector.
– Unscrew the bolts -1- (2x).
– Take out the upper backrest adjustment motor -4-.

♦ Installing

– Install the upper backrest adjustment motor -4- in the reverse order of removal.

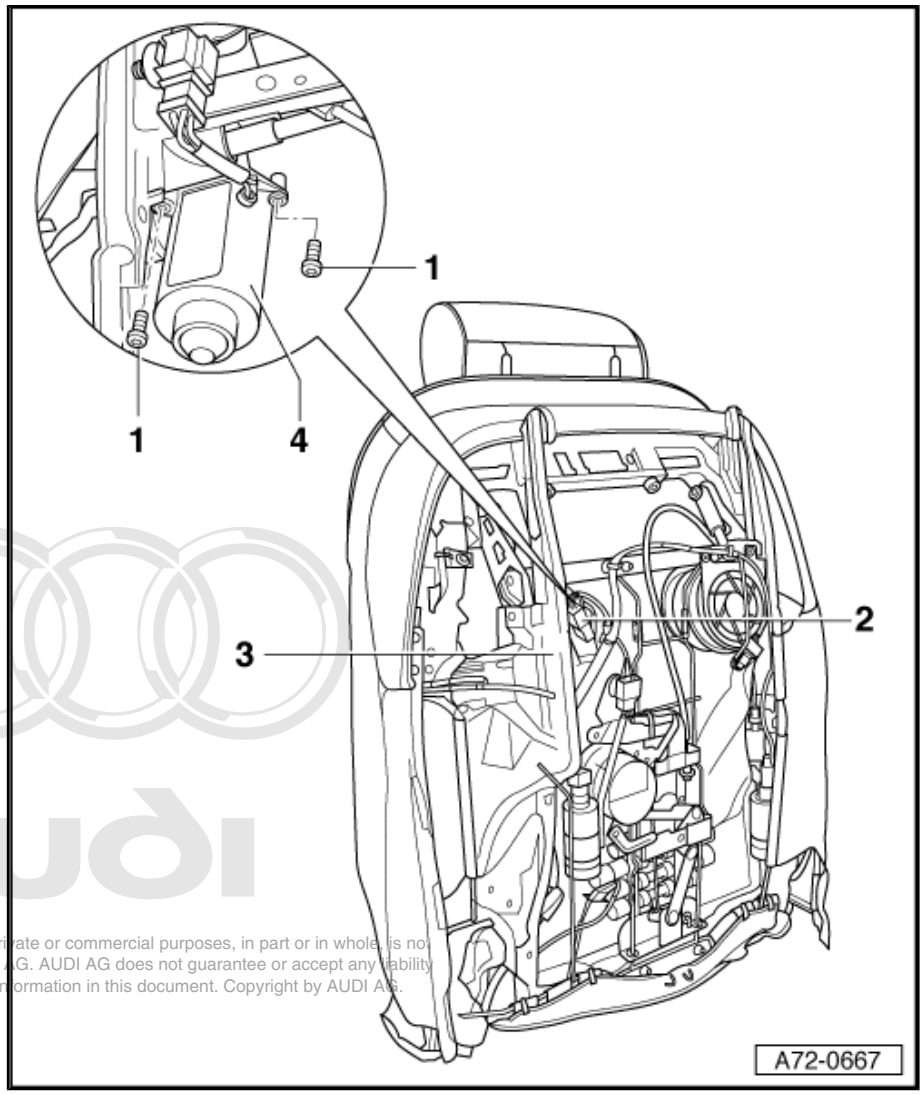

Protected by copyright. Copying for private or commercial purposes, in part or in whole, is not permitted unless authorised by AUDI AG. AUDI AG does not guarantee or accept any liability with respect to the correctness of information in this document. Copyright by AUDI AG.

3.23 Removing and installing rear left seat -V127- and rear right -V128- lumbar support longitudinal adjustment motor with four-way lumbar support

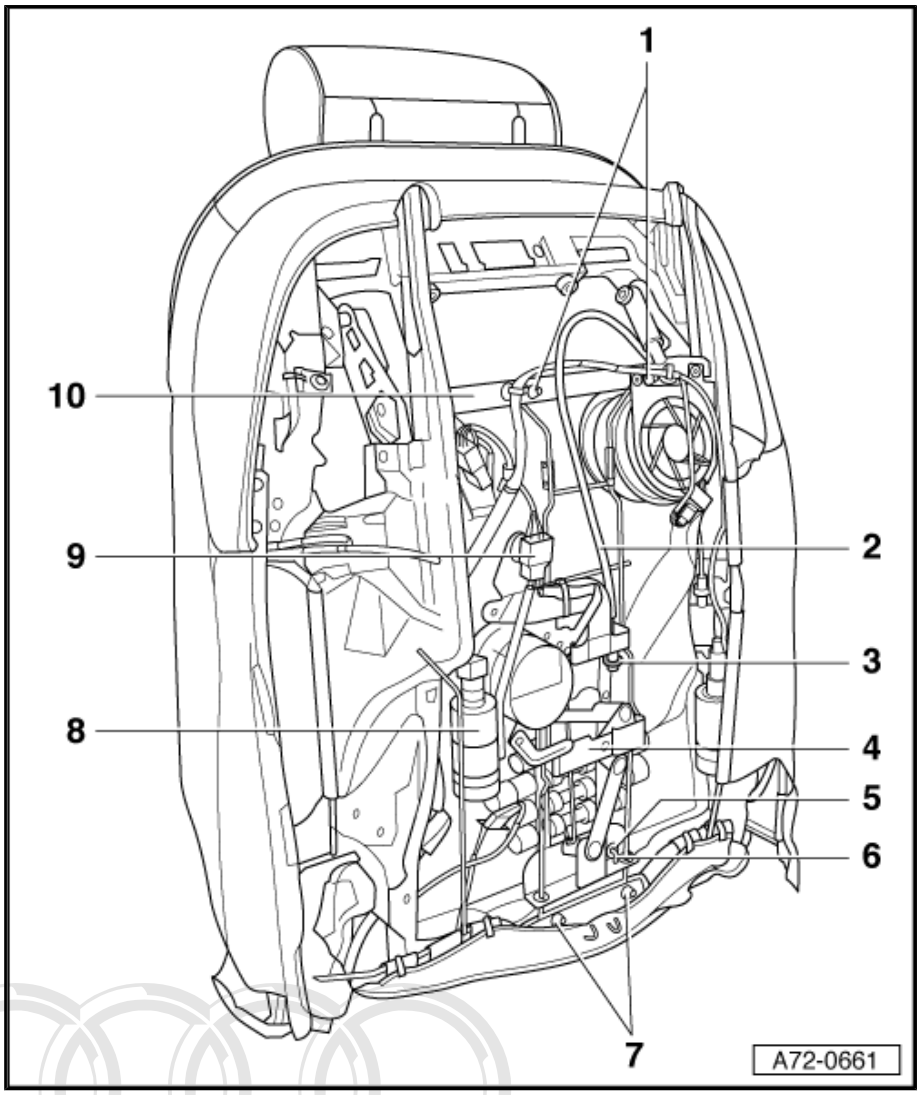

1 - Upper clip (2x)

2 - Bowden cable

3 - Clip

4 - 4-way lumbar support

5 - Spring lock washer

6 - Hook

7 - Lower clip (2x)

8 - Rear left seat -V127- and rear right -V128- lumbar support longitudinal adjustment motor

♦ Removing

- Remove the seat pan ⇒ page 342 .
- Remove the individual rear seat ⇒ page 343 .
- Unplug the connector -9-.
- Disengage the Bowden cable -2- from the clip -3-.
- Prise out the lock washer -5-.
- Disengage the Bowden cable -2- at the hook -6-.
- Disengage the upper clips -1- (2x) from the backrest frame -10-.
- Disengage the lower clips -7- (2x) from the backrest frame -10-.
- Take out the lumbar support adjustment motor -8- with the 4-way lumbar support -4-.

♦ Installing

- Install the lumbar support adjustment motor -8- in the reverse order of removal.

9 - Connector

10 - Backrest frame

Protected by copyright. Copying for private or commercial purposes, in part or in whole, is not permitted unless authorised by AUDI AG. AUDI AG does not guarantee or accept any liability with respect to the correctness of information in this document. Copyright by AUDI AG.

3.24 Removing and installing rear left seat lumbar support height adjustment motor -V225- and -V225-

1 - Bowden cable

2 - Clip

3 - Fastening strip

4 - Rear left seat lumbar support height adjustment motor -V225- and -V225-

- Removing
  - Remove the seat pan ⇒ page 342 .
  - Remove the individual rear seat ⇒ page 343 .
  - Unplug the connector -5-.
  - Disengage the Bowden cable -1- from the clip -2-.
  - Prise out the lock washer -6-.
  - Disengage the Bowden cable -1- at the hook -7-.
  - Unscrew the bolt -8-.
  - Take out the lumbar support height adjustment motor -4-.
- Installing
  - Install the lumbar support height adjustment motor -4- in the reverse order of removal.

5 - Connector

6 - Spring lock washer

7 - Hook

8 - Bolt

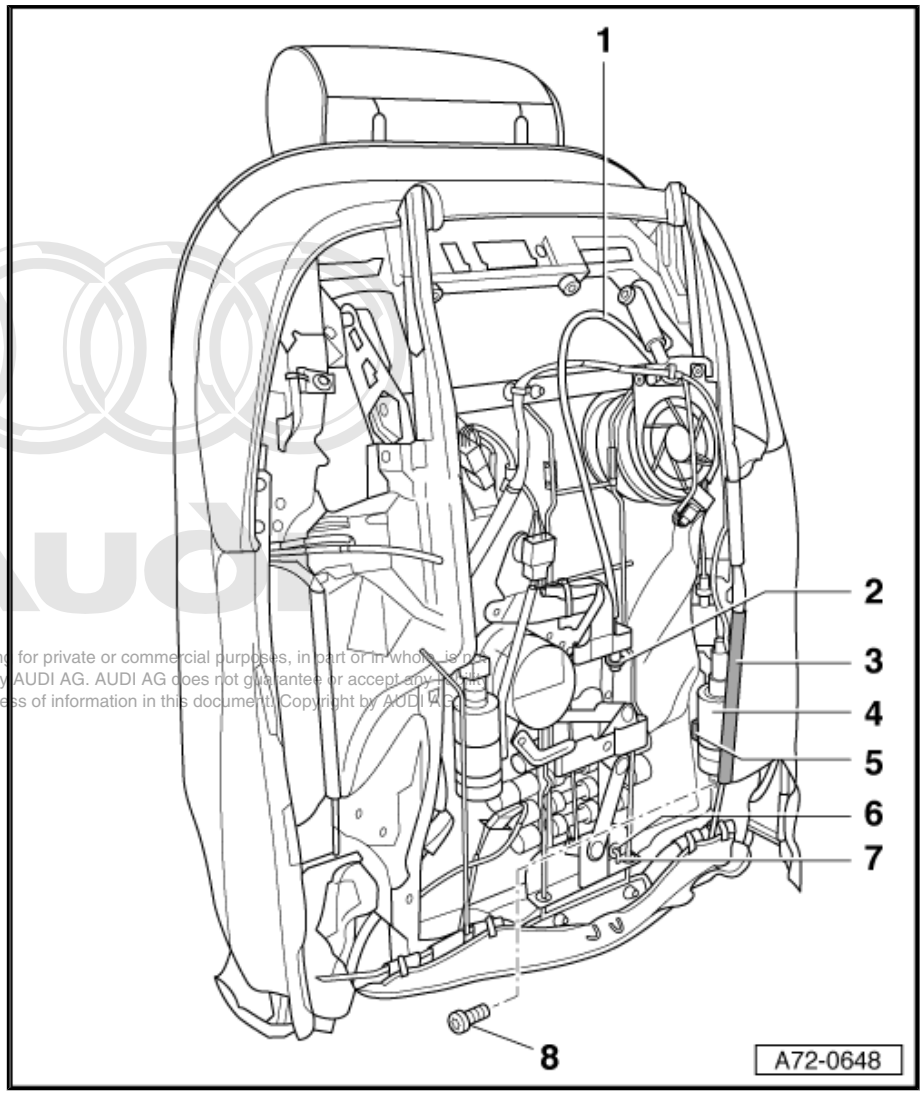

Protected by copyright. Copying for private or commercial purposes, in part or in whole, is not permitted unless authorised by AUDI AG. AUDI AG does not guarantee or accept any liability with respect to the correctness of information in this document. Copyright by AUDI AG.

3.25 Removing and installing outer seat belt retainer

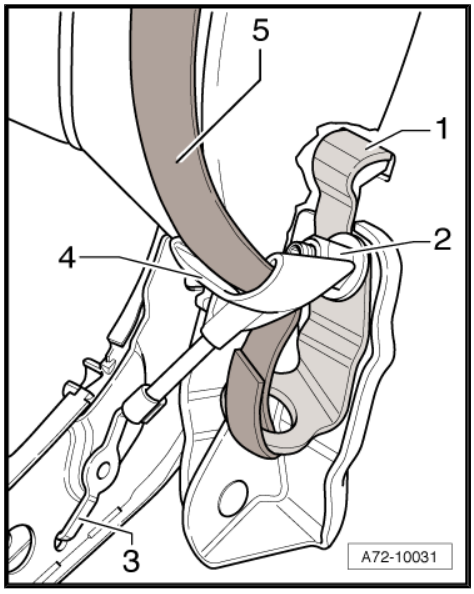

– Guide the webbing -5- out of the webbing holder -4-.
– Disengage the webbing holder -4- at the lug -3-.
– Pull the webbing holder -4- forwards in arrow direction.
– Unscrew the nut -2-. Tightening torque 55 Nm.
– Take out the seat belt retainer -1-.

3.26 Removing and installing head restraint

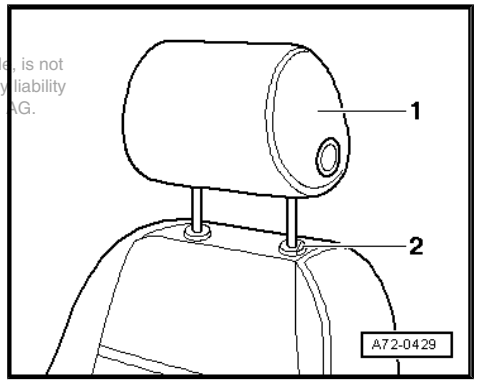

This document is copyright. Copying for private or commercial purposes, in part or in whole, is not permitted unless authorised by AUDI AG. AUDI AG does not guarantee or accept any liability with respect to the correctness of information in this document. Copyright by AUDI AG.

♦ Removing
– Press the button -2-.
– Lift out the head restraint -1-.
♦ Installing
– Install the head restraint -1- in the reverse order of removal.

74 – Seat - padding, covers

1 Front seat covers and padding (memory seat, electrically operated seat)

Block diagram

- ⇒ „1.1 Removing and installing seat pan cover and padding (sports seat)“, page 360
- ⇒ „1.2 Removing and installing seat cushion extension trim“, page 362
- ⇒ „1.3 Removing and installing seat side padding and cover“, page 363
- ⇒ „1.4 Removing and installing backrest cover and padding (sports seat, standard seat)“, page 364
- ⇒ „1.5 Removing head restraint guides“, page 366
- ⇒ „1.6 Removing head restraint guides (convenience seat)“, page 366
- ⇒ „1.7 Removing and installing seat heating element (sports seat)“, page 367
- ⇒ „1.8 Removing and installing seat side padding heating elements (bonded)“, page 367
- ⇒ „1.9 Removing and installing backrest heating element“, page 368
- ⇒ „1.10 Removing and installing backrest heating elements (bonded)“, page 368
- ⇒ „1.11 Removing and installing head restraint cover and padding“, page 369

Protected by copyright. Copying for private or commercial purposes, in part or in whole, is not permitted unless authorised by AUDI AG. AUDI AG does not guarantee or accept any liability with respect to the correctness of information in this document. Copyright by AUDI AG.

1.1 Removing and installing seat pan cover and padding (sports seat)

1.1.1 Separating cover and padding from seat pan

1 - Fastening strip

2 - Cover and padding

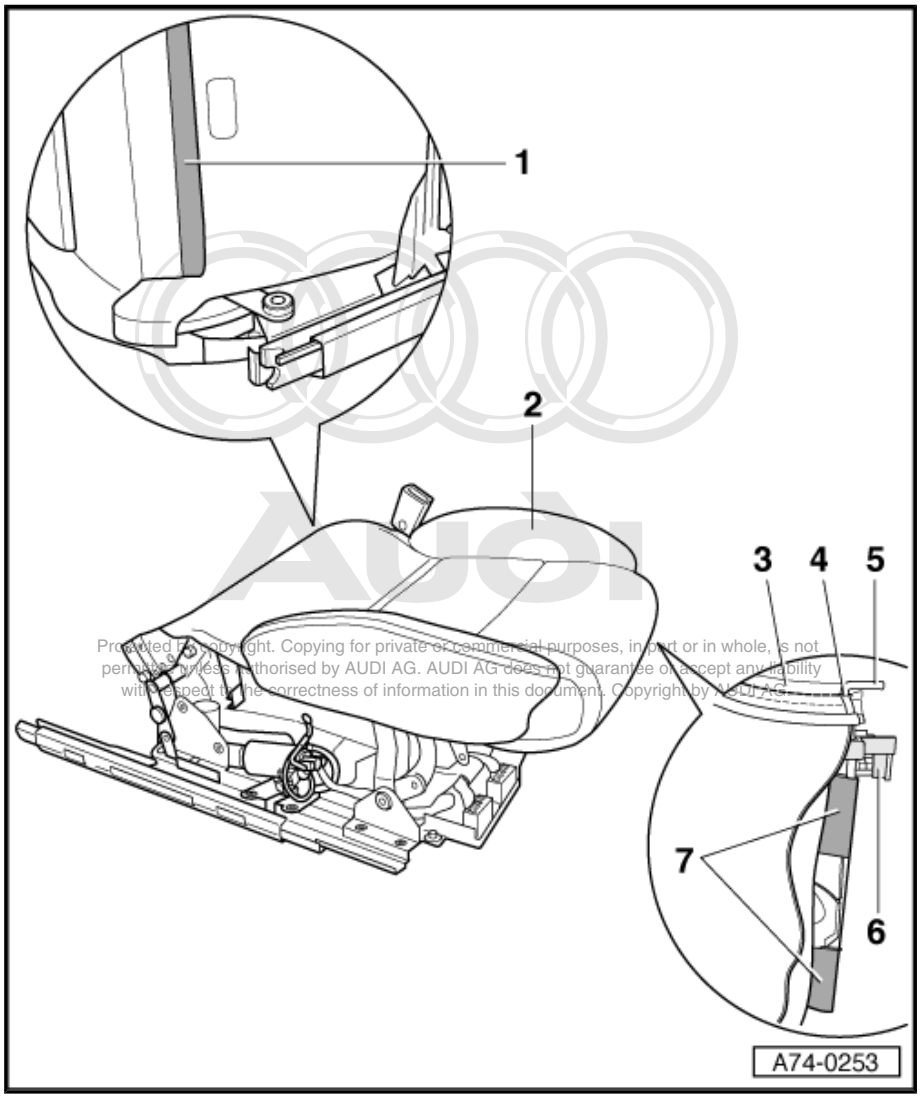

Protected by copyright. Copying for private or commercial purposes, in part or in whole, is not permitted unless authorised by AUDI AG. AUDI AG does not guarantee or accept any liability with respect to the correctness of information in this document. Copyright by AUDI AG.

♦ Removing

- Remove the seat ⇒ page 282 .
- Attach the holder for seat repair -VAS 6136- to the engine and gear-box holder -VAS 6095- .
- Attach the front seat to the holder for seat repair -VAS 6136- .
- Remove the side trim on the sill panel side ⇒ page 292 .
- Remove the side trim on the tunnel side ⇒ page 293 .
- Remove the front trim ⇒ page 293 .
- Remove the holder for the seat side trim panels ⇒ page 294 .
- Remove the backrest ⇒ page 288 .
- Use a screwdriver to prise out the fastening strip -1-.
- Disengage the fastener -5- from the holders -6- (2x).
- Disengage the fastening strips -7- (3x) from the fastener -5-.
- Disengage the lugs -4- (2x) from the fastener -5-.
- Guide the tensioning wires -4- (2x) out of the cover tabs -3- (2x).

3 - Cover tabs (2x)

4 - Tensioning wires with lugs (2x)

5 - Fastener

6 - Holder (2x)

7 - Fastening strips (3x)

1 - Cover and padding

- ❑ Lift the cover and padding -1-.
- ❑ Release the fasteners -3- (2x) from the clips -2- (2x).
- ❑ Unplug the seat pan heating connector -5-.
- ❑ Unplug the seat side padding heating connector -6-.
- ❑ Detach the cover and padding -1-.
- ❑ Guide the fasteners -3- (2x) out of the cover tabs -4- (2x).

♦ Installing

– Install the cover and padding -1- in the reverse order of removal.

2 - Clips (2x)

3 - Fastener (2x)

4 - Cover tabs (2x)

5 - Seat pan heating connector

6 - Seat side padding heating connector

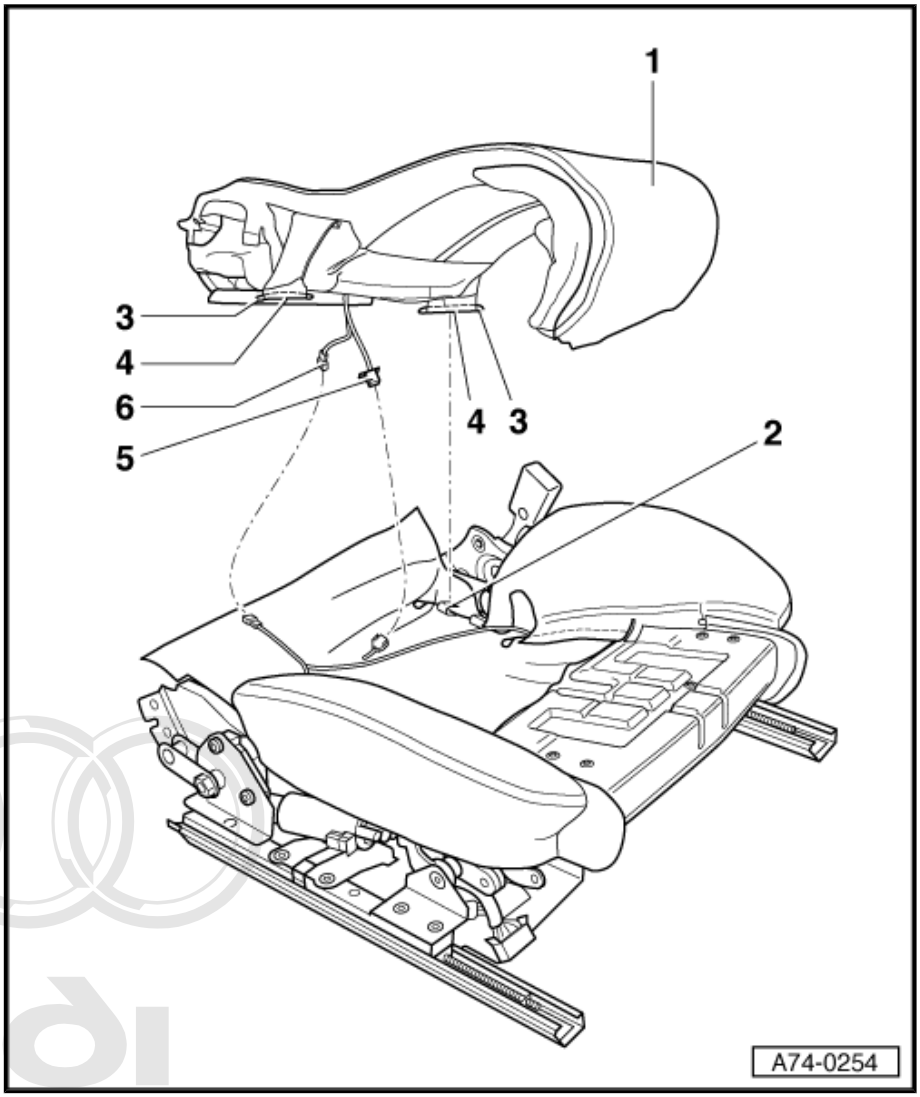

Protected by copyright. Copying for private or commercial purposes, in part or in whole, is not permitted unless authorised by AUDI AG. AUDI AG does not guarantee or accept any liability with respect to the [illegible] AUDI AG.

1.1.2 Separating cover from padding

Special tools and workshop equipment required

♦ Awl -V.A.G 1636 A-

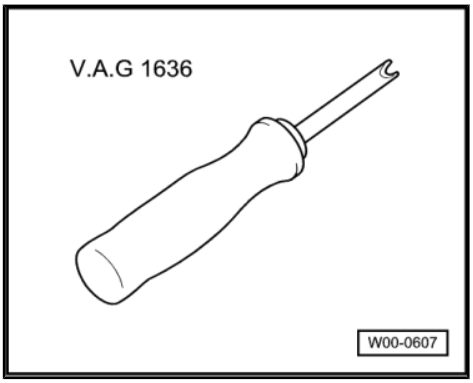

1 - Cover

- ♦ Removing
  - – Unfasten the fastening strip -6-.
  - – Lift the front of the cover -1-.
  - – Use an awl -V.A.G 1636 A- -2- to prise the fasteners -3- out of the plastic clips -4-.
  - – Detach the cover -1- from the padding -5-.
- ♦ Installing
  - – Replace damaged plastic clips.
  - – Start by pressing the transverse rod fasteners into the plastic clips.
  - – Fit the cover in the reverse order of removal.

2 - Awl -V.A.G 1636 A-

3 - Fastener

4 - Plastic clips

5 - Padding

6 - Fastening strip

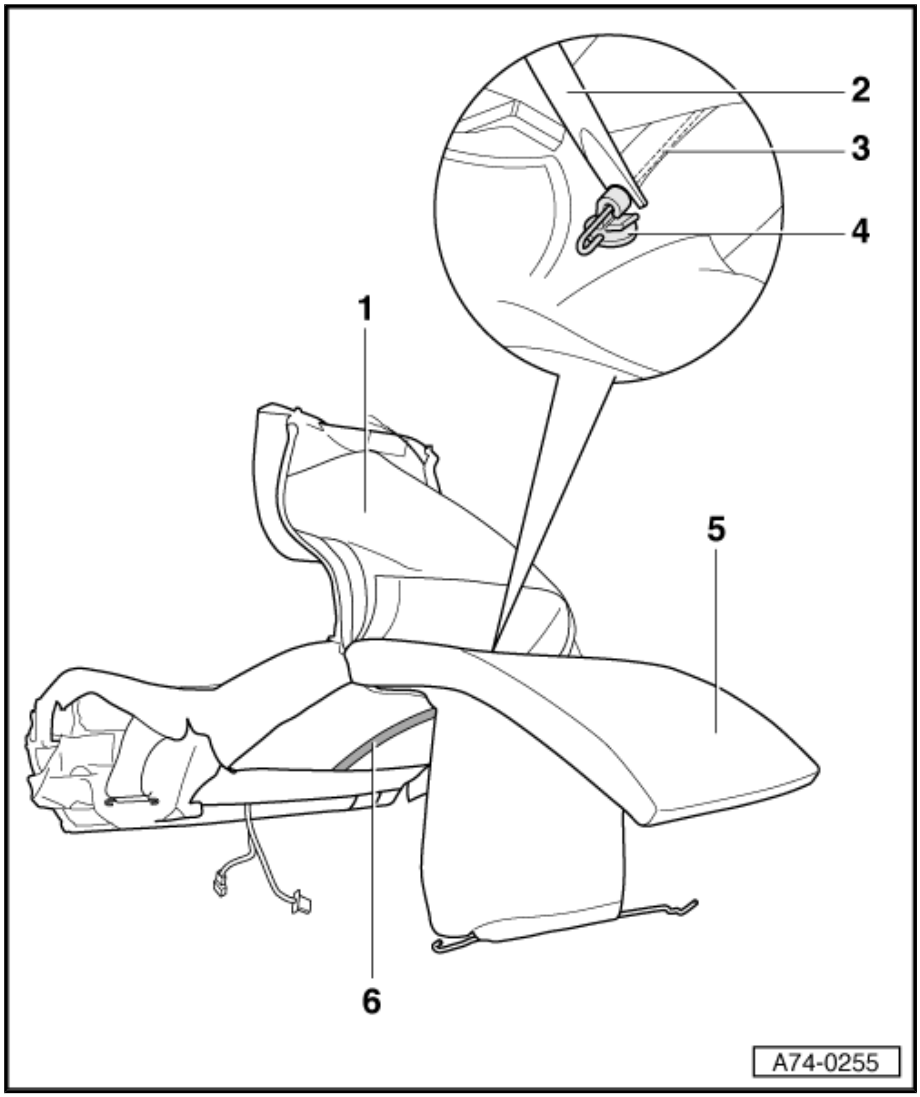

1.2 Removing and installing seat cushion extension trim

- ♦ Removing
- – Pull out the trim -1- in arrow direction.
- ♦ Installing
- – Install the trim -1- in the reverse order of removal.

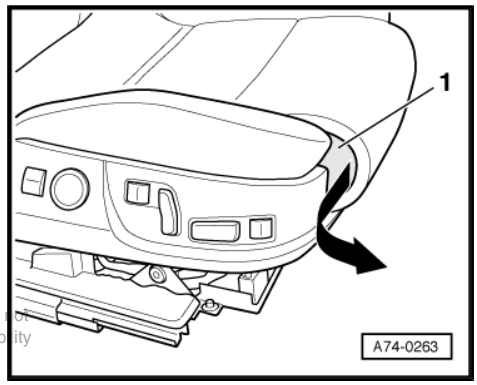

Protected by copyright. Copying for private or commercial purposes, in part or in whole, is not permitted unless authorised by AUDI AG. AUDI AG does not guarantee or accept any liability with respect to the correctness of information in this document. Copyright by AUDI AG.

1.3 Removing and installing seat side padding and cover

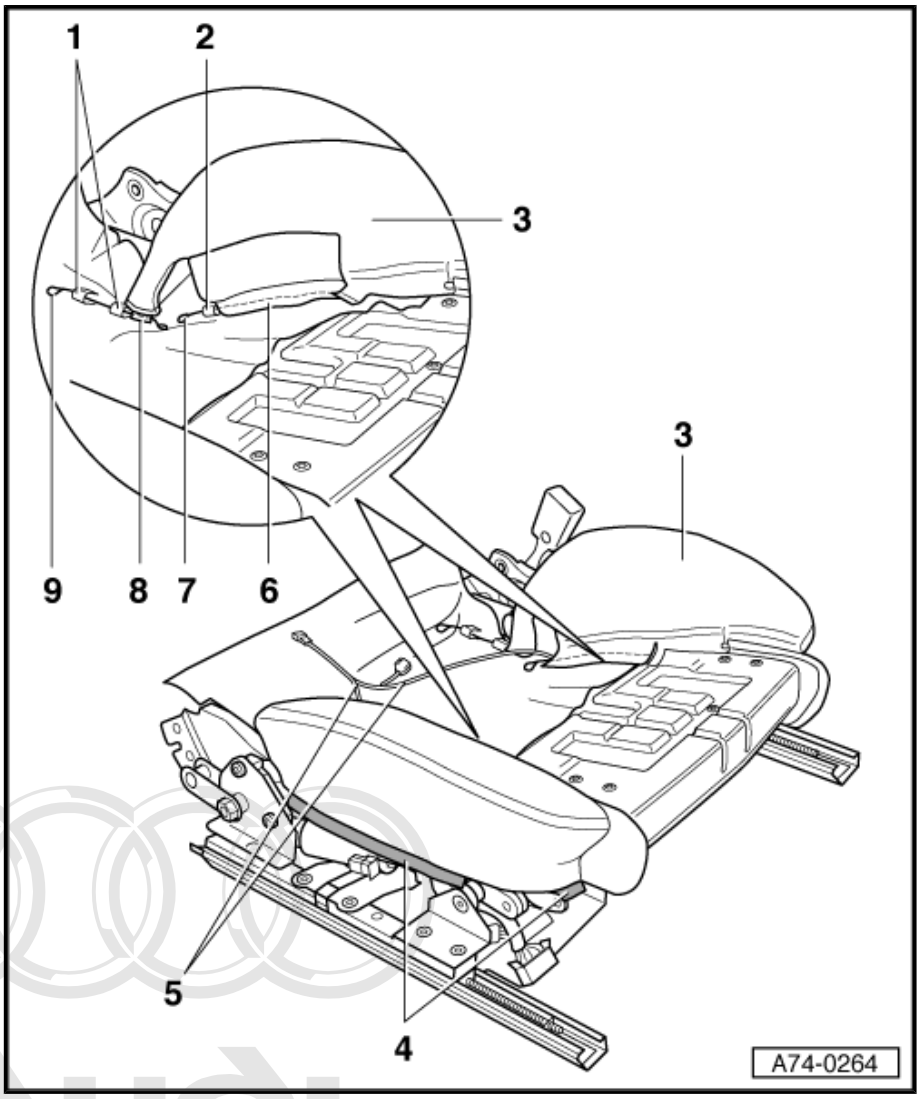

1 - Clips (4x)

2 - Clips (2x)

3 - Seat side padding (2x)

♦ Removing

- Remove the seat ⇒ page 282 .
- Attach the holder for seat repair -VAS 6136- to the engine and gear-box holder -VAS 6095- .
- Attach the front seat to the holder for seat repair -VAS 6136- .
- Remove the side trim on the sill panel side ⇒ page 292 .
- Remove the side trim on the tunnel side ⇒ page 293 .
- Remove the front trim ⇒ page 293 .
- Remove the holder for the seat side trim panels ⇒ page 294 .
- Remove the backrest ⇒ page 288 .
- Remove the seat pan cover and padding ⇒ page 360 .
- Use a screwdriver to prise out the fastening strips -4- (2x).
- Release the fastener -9- from the clips -1- (2x).
- Release the fastener -7- from the clip -2-.
- Guide the fasteners -9- and -7- out of the cover tabs -8- and -6-.
- Remove the side padding on the other side in the same manner.
- Detach the side padding -3- (2x).
- To replace the covers or heating elements, pull the covers (2x) off the padding (2x).

Protected by copyright. Copying for private or commercial purposes, in part or in whole, is not permitted unless authorised by AUDI AG. AUDI AG does not guarantee or accept any liability with respect to the correctness of information in this document. Copyright by AUDI AG.

♦ Installing

- Replace damaged plastic clips.
- Slide the cables -5- (2x) beneath the side padding.
- Install the cover and padding -3- in the reverse order of removal.

4 - Fastening strips (4x)

5 - Cables (2x)

6 - Cover tabs (2x)

7 - Fastener (2x)

8 - Cover tabs (2x)

9 - Fastener (2x)

1.4 Removing and installing backrest cover and padding (sports seat, standard seat)

> ⚠ **WARNING**
>
> *Heed the safety regulations for pyrotechnic components* *⇒ page 94* *.*

1.4.1 Separating cover and padding from backrest frame

1 - Cover and padding

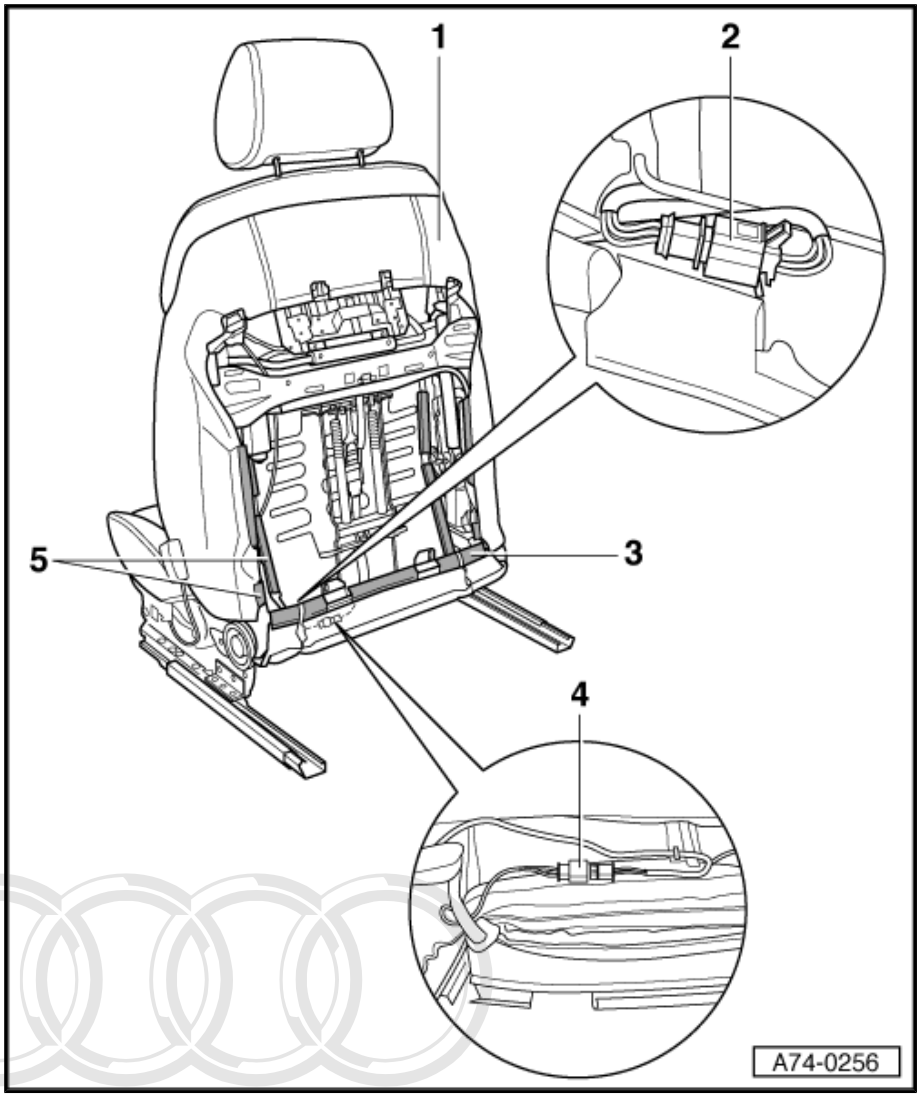

- ♦ Removing
  - – Remove the seat ⇒ page 282 .
  - – Attach the holder for seat repair -VAS 6136- to the engine and gearbox holder -VAS 6095- .
  - – Attach the front seat to the holder for seat repair -VAS 6136- .
  - – Remove the side trim on the sill panel side ⇒ page 292 .
  - – Remove the side trim on the tunnel side ⇒ page 293 .
  - – Remove the front trim ⇒ page 293 .
  - – Remove the holder for the seat side trim panels ⇒ page 294 .
  - – Remove the backrest ⇒ page 288 .
  - – Remove the head restraints ⇒ page 315 .
  - – Remove the head restraint guides ⇒ page 366 .
  - – Remove the upper backrest cover panel ⇒ page 309 .
  - – Remove the lower backrest cover panel ⇒ page 310 .
  - – Unplug the connector -2-.
  - – Use a screwdriver to prise out the fastening strips -5- (8x).
  - – Use a screwdriver to prise out the lower fastening strips -3- (5x).
  - – Fold down the cover and padding -1-.
  - – Unplug the connector -4-.
  - – Detach the cover and padding -1-.
- ♦ Installing
  - – Install the cover and padding -1- in the reverse order of removal.

Protected by copyright. Copying for private or commercial purposes, in part or in whole, is not permitted unless authorised by AUDI AG. AUDI AG does not guarantee or accept any liability with respect to the correctness of information in this document. Copyright by AUDI AG.

2 - Backrest heating element connector

3 - Lower fastening strips (5x)

4 - Seat side padding heating element connector

5 - Fastening strips (8x)

1.4.2 Separating cover from padding

Special tools and workshop equipment required

- Awl -V.A.G 1636 A-

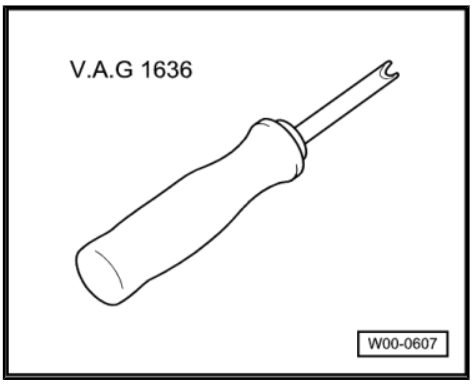

1 - Cover

- Removing
  - Unfasten the velcro strips -2- (2x).
  - Unfasten the fastening strips -3- (2x).
  - Use an awl -V.A.G 1636A- -6- to prise the fasteners -4- out of the plastic clips -5-.
  - Detach the cover -1- from the padding -7-.
- Installing
  - Replace damaged plastic clips.
  - Start by pressing the transverse rod fasteners into the plastic clips.
  - Fit the cover in the reverse order of removal.

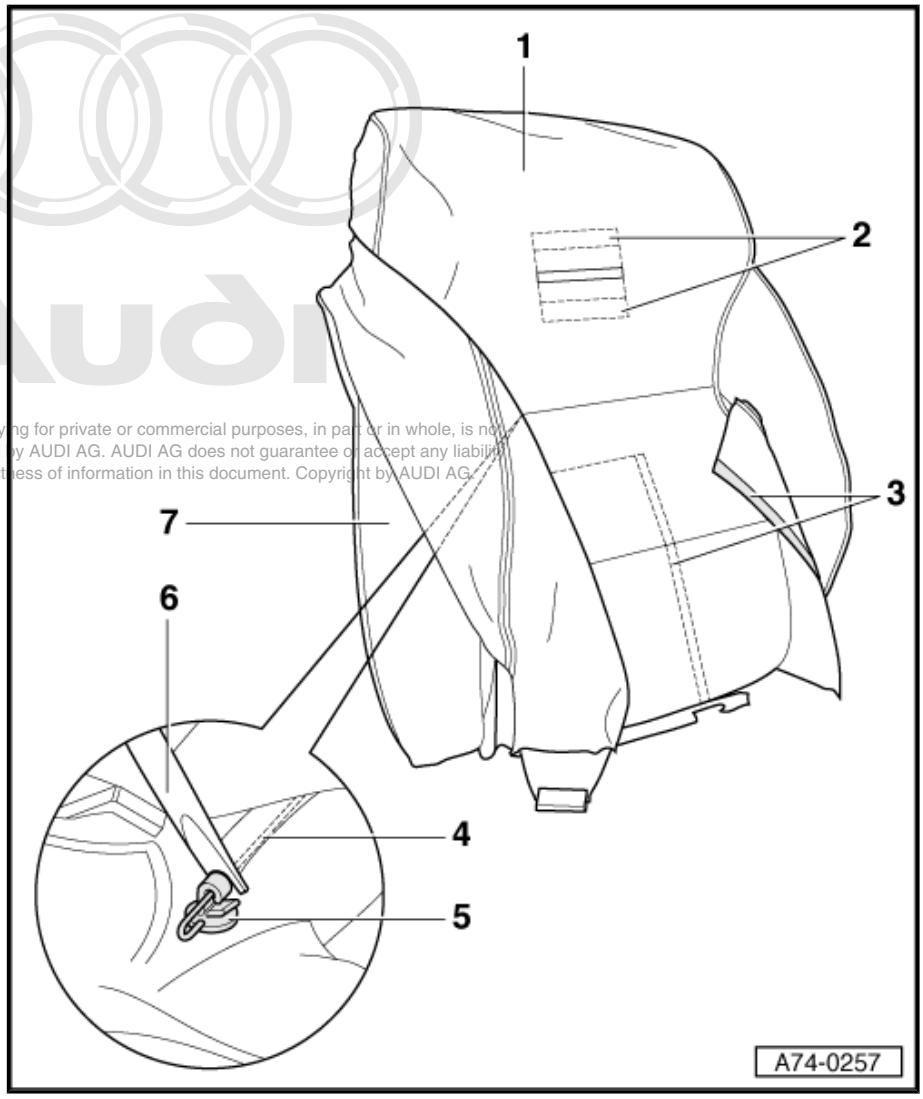

Protected by copyright. Copying for private or commercial purposes, in part or in whole, is not permitted unless authorised by AUDI AG. AUDI AG does not guarantee or accept any liability with respect to the correctness of information in this document. Copyright by AUDI AG.

2 - Velcro strips (2x)

3 - Fastening strips (2x)

4 - Fastener

5 - Plastic clips

6 - Awl -V.A.G 1636A-

7 - Padding

1.5 Removing head restraint guides

Note

For greater clarity, the head restraint guide -1- has been removed in the illustration.

– Insert an upholstery needle or screwdriver -3- with a max. width of 2 mm in the hole -4- (the hole -4- is located opposite the fastener of the head restraint guide).

– Whilst levering the screwdriver -3- in the direction of arrow -A- and pressing the retainer tab -2- in the direction of arrow -B-, pull out the head restraint guide -1-.

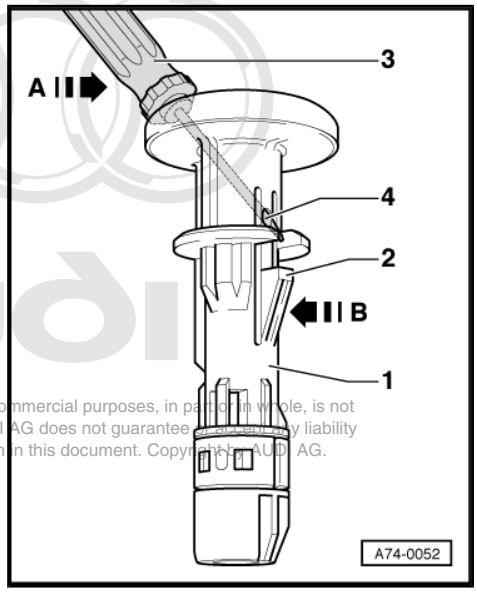

Protected by copyright. Copying for private or commercial purposes, in part or in whole, is not permitted unless authorised by AUDI AG. AUDI AG does not guarantee or accept any liability with respect to the correctness of information in this document. Copyright by AUDI AG.

1.6 Removing head restraint guides (convenience seat)

♦ Removing

– Remove the head restraint ⇒ page 315 .

– Lift out the head restraint guides -2- (2x).

♦ Installing

– Install the head restraint guides -2- (2x) in the reverse order of removal.

– Make sure the tabs -3- (4x) engage.

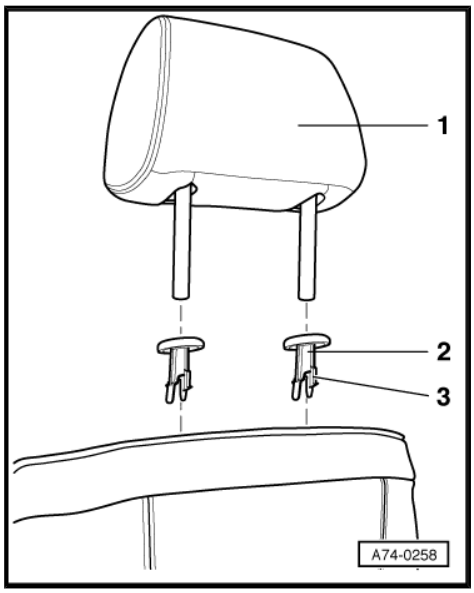

1.7 Removing and installing seat heating element (sports seat)

Note

The centre section seat heating element -1- is stitched to the cover. The cover must be replaced if the heating element is defective.

- Remove the seat ⇒ page 282 .
- Attach the holder for seat repair -VAS 6136- to the engine and gearbox holder -VAS 6095- .
- Attach the front seat to the holder for seat repair -VAS 6136- .
- Remove the backrest ⇒ page 288 .
- Remove the seat pan cover and padding ⇒ page 360 .
- Replace the cover with seat heating element.

Protected by copyright. Copying or distribution in any form or for any purpose, in part or in whole, is not permitted unless authorised by AUDI AG. AUDI AG does not guarantee or accept any liability with respect to the correctness of information in this document. Copyright by AUDI AG.

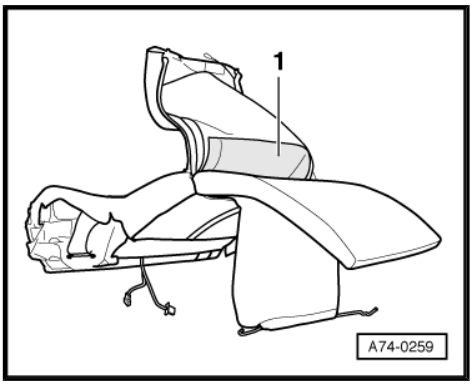

1.8 Removing and installing seat side padding heating elements (bonded)

- Remove the seat ⇒ page 282 .
- Attach the holder for seat repair -VAS 6136- to the engine and gearbox holder -VAS 6095- .
- Attach the front seat to the holder for seat repair -VAS 6136- .
- Remove the backrest ⇒ page 288 .
- Remove the seat pan cover and padding ⇒ page 360 .
- Remove the side padding ⇒ page 363 .
- Cut off the cables -1- (2x) at the locations marked -A- (2x).
- Align the heating elements -2- (2x) on the seat side padding -3- (2x), detach the backing and bond the heating elements onto the surface of the padding.

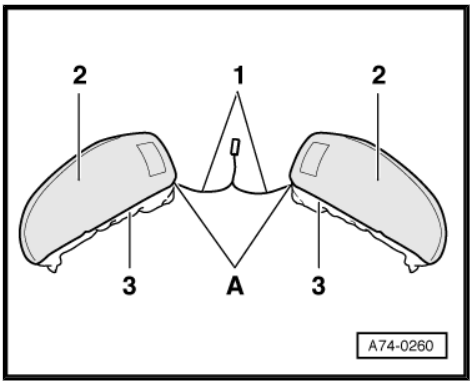

1.9 Removing and installing backrest heating element

Note

The centre section backrest heating element is stitched to the cover. The cover must be replaced if the heating element is defective.

- Remove the seat ⇒ page 282 .
- Attach the holder for seat repair -VAS 6136- to the engine and gearbox holder -VAS 6095- .
- Attach the front seat to the holder for seat repair -VAS 6136- .
- Remove the backrest ⇒ page 288 .
- Remove the backrest cover and padding ⇒ page 364 .
- Replace the cover with backrest heating element.

1.10 Removing and installing backrest heating elements (bonded)

Protected by copyright. Copying for private or commercial purposes, in part or in whole, is not permitted unless authorised by AUDI AG. AUDI AG does not guarantee or accept any liability with respect to the correctness of information in this document. Copyright by AUDI AG.

- Remove the seat ⇒ page 282 .
- Attach the holder for seat repair -VAS 6136- to the engine and gearbox holder -VAS 6095- .
- Attach the front seat to the holder for seat repair -VAS 6136- .
- Remove the backrest ⇒ page 288 .
- Remove the backrest cover and padding ⇒ page 364 and ⇒ page 364 .
- Cut the cables -2- (2x) off the old heating elements -1- (2x) at the locations marked -A- (2x).
- Align the heating elements -1- (2x) on the seat side padding, detach the backing and bond the heating elements onto the surface of the padding.

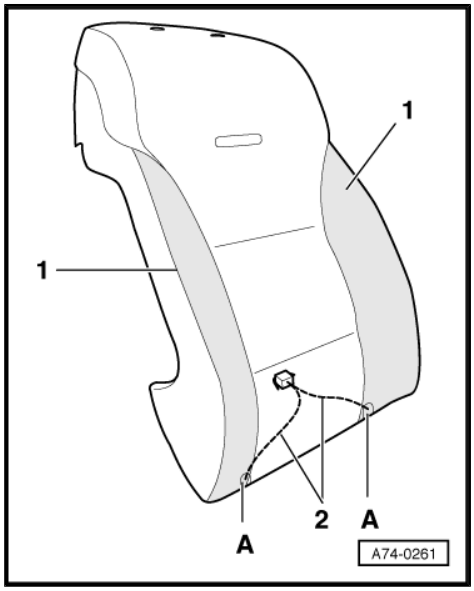

1.11 Removing and installing head restraint cover and padding

– Remove the head restraint ⇒ page 315 .

– Use a screwdriver to prise out the fastening strips -2- (4x).

– Detach the cover and padding -1-.

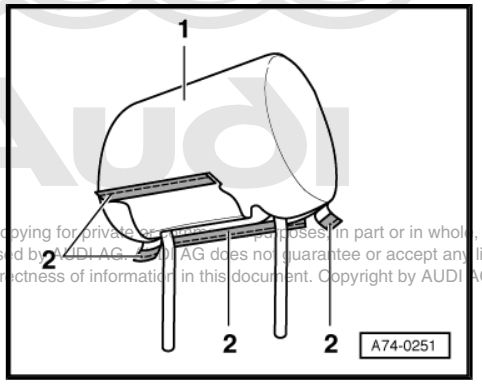

Protected by copyright. Copying for private or commercial purposes, in part or in whole, is not permitted unless authorised by AUDI AG. AUDI AG does not guarantee or accept any liability with respect to the correctness of information in this document. Copyright by AUDI AG.

– Take the padding -2- out of the cover -3-.

♦ Installing:

– Insert the padding -2- in the proper position in the cover -3-.

– Slide the head restraint mount -1- into the padding with cover.

– Press the fastening strips firmly into the guide slot (check by pulling).

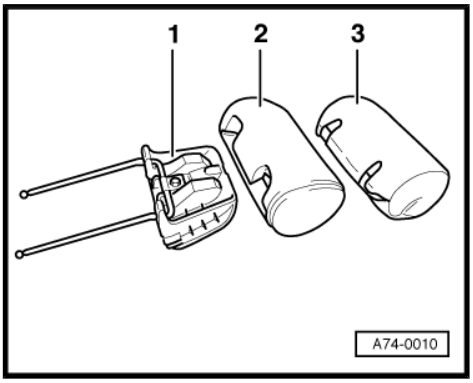

2 Rear seat covers and padding

Block diagram

- ⇒ „2.1 Removing and installing cover and padding for rear seat bench“, page 371
- ⇒ „2.2 Removing and installing cover and padding for rear seat backrest“, page 373
- ⇒ „2.3 Removing head restraint guides with backrest in position“, page 375
- ⇒ „2.4 Removing head restraint guides with backrest removed“, page 375
- ⇒ „2.5 Removing and installing head restraint cover and padding“, page 376

Special tools and workshop equipment required

- Awl -V.A.G 1636 A-

Protected by copyright. Copying for private or commercial purposes, in part or in whole, is not permitted unless authorised by AUDI AG. AUDI AG does not guarantee or accept any liability with respect to the correctness of information in this document. Copyright by AUDI AG.

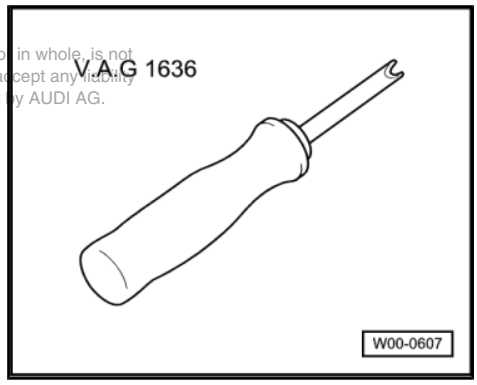

- Fastening tool -VAS 6138-

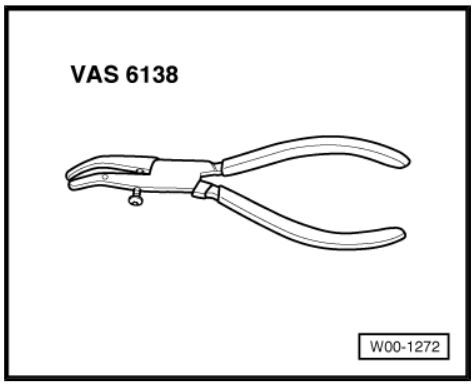

2.1 Removing and installing cover and padding for rear seat bench

2.1.1 Separating cover and padding from seat pan

1 - Awl -V.A.G 1636 A-

2 - Fastener

3 - Plastic clips

4 - Padding

♦ Removing

– Remove the rear seat bench ⇒ page 333 .
– Use a screwdriver to prise out the all-round fastening strips -5-.
– Detach the cover and padding from the seat pan.

♦ Installing

– Fit the cover and padding in the reverse order of removal.

5 - All-round fastening strips

6 - Cover

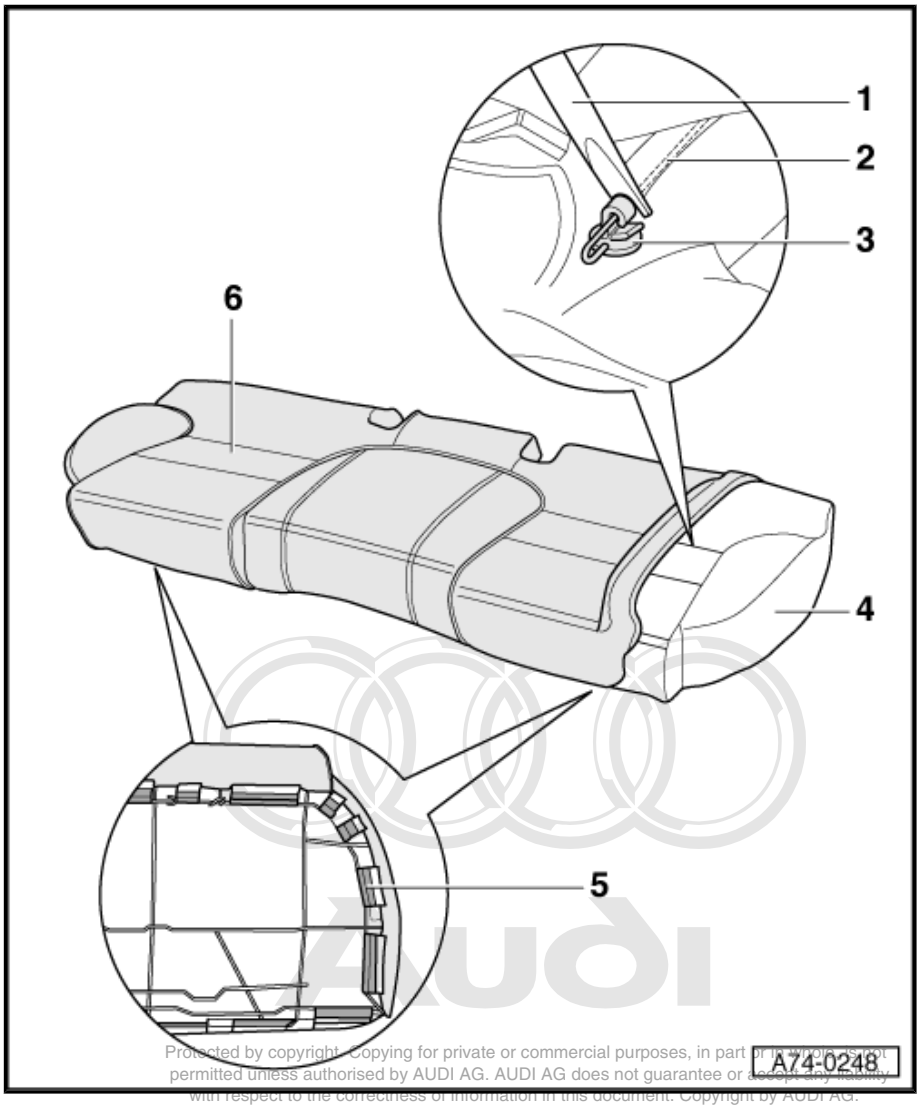

Protected by copyright. Copying for private or commercial purposes, in part or in whole, is not permitted unless authorised by AUDI AG. AUDI AG does not guarantee or accept any liability with respect to the correctness of information in this document. Copyright by AUDI AG.

2.1.2 Separating cover from padding

1 - Awl -V.A.G 1636 A-

2 - Fastener

3 - Plastic clips

4 - Padding

5 - All-round fastening strips

6 - Cover

- Removing
  - Use an awl -V.A.G 1636 A- -1- to prise the fasteners -2- out of the plastic clips -3-.
  - Detach the cover -6- from the padding -4-.
- Installing
  - Replace damaged plastic clips.
  - Start by pressing the transverse rod fasteners into the plastic clips.
  - Fit the cover in the reverse order of removal.

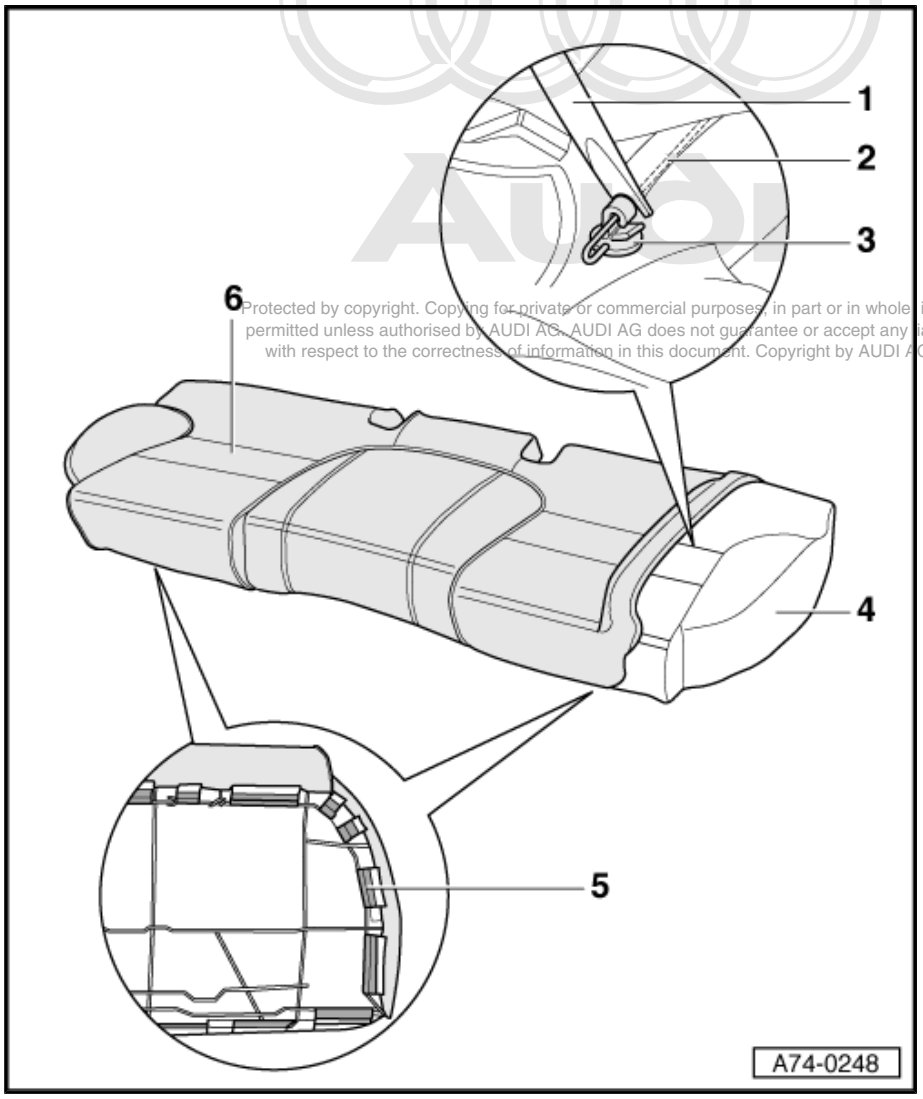

Protected by copyright. Copying for private or commercial purposes, in part or in whole, is not permitted unless authorised by AUDI AG. AUDI AG does not guarantee or accept any liability with respect to the correctness of information in this document. Copyright by AUDI AG.

2.2 Removing and installing cover and padding for rear seat backrest

2.2.1 Separating cover and padding from backrest frame

1 - All-round fastening strips

2 - Side airbag

3 - Zip

4 - Protective cover for side airbag

5 - Opening in padding

6 - Fastener

7 - Cover

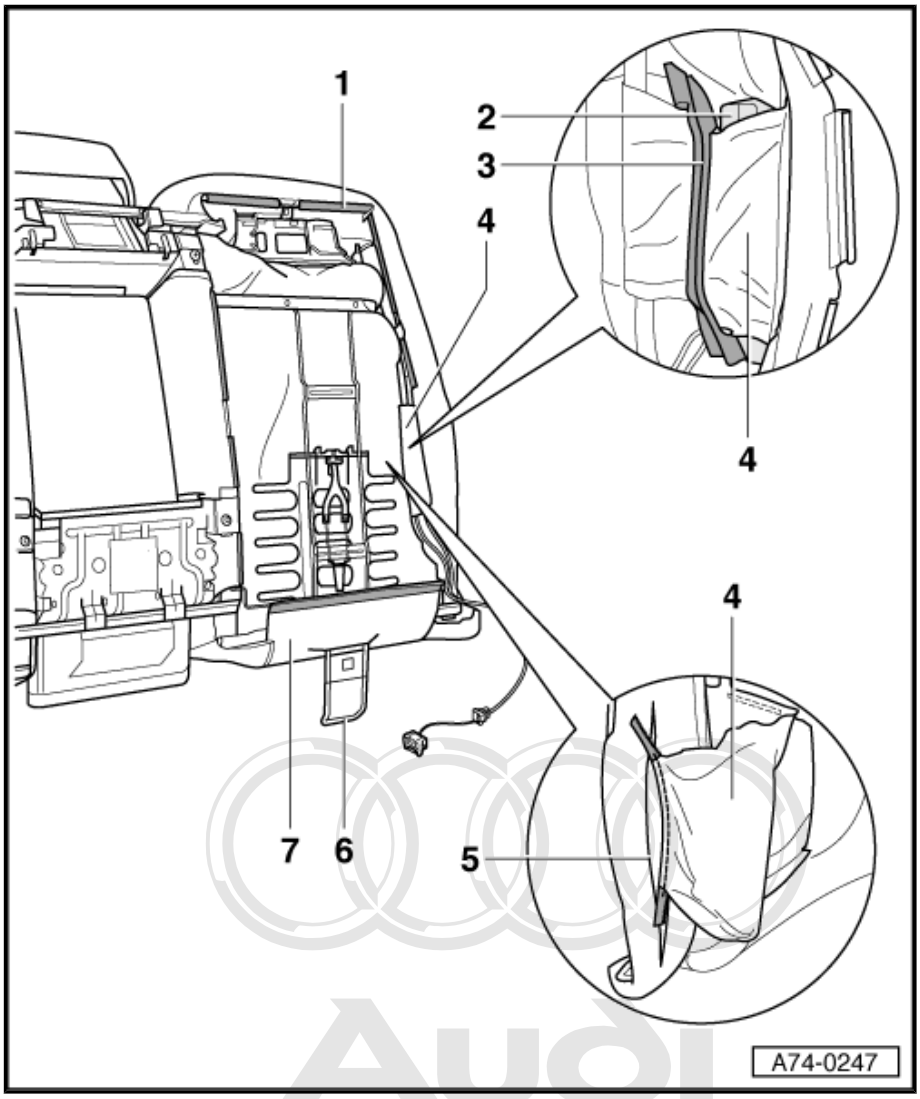

♦ Removing

- Remove the rear seat bench ⇒ page 333 .
- Remove the rear seat backrest ⇒ page 334 .
- Remove the head restraints ⇒ page 337 .
- Remove the head restraint guides ⇒ page 375 .
- Use a screwdriver to prise out the all-round fastening strips -1-.
- Pull the lower cover -7- over the fastener -6-.
- Fold over the cover -7- in the area of the side airbag -2-.
- Unfasten the zip -3- at the protective cover for the side airbag -4-.
- Pull out the protective cover for the side airbag -4- through the opening in the padding -5-.
- Detach the cover and padding from the backrest frame.

♦ Installing

- Fit the cover and padding in the reverse order of removal.

Protected by copyright. Copying for private or commercial purposes, in part or in whole, is not permitted unless authorised by AUDI AG. AUDI AG does not guarantee or accept any liability with respect to the correctness of information in this document. Copyright by AUDI AG.

- Fasten the zip at the protective cover for the side airbag using the Audi fastening tool for rear side airbag -VAS 6273- .

2.2.2 Separating cover from padding

1 - Cover

- Removing
  - Use an awl -V.A.G 1636 A- -5- to prise the fasteners -3- out of the plastic clips -4-.
  - Detach the cover -1- from the padding -2-.
- Installing
  - Replace damaged plastic clips.
  - Start by pressing the transverse rod fasteners into the plastic clips.
  - Fit the cover in the reverse order of removal.

2 - Padding

3 - Fastener

4 - Plastic clips

5 - Awl -V.A.G 1636 A-

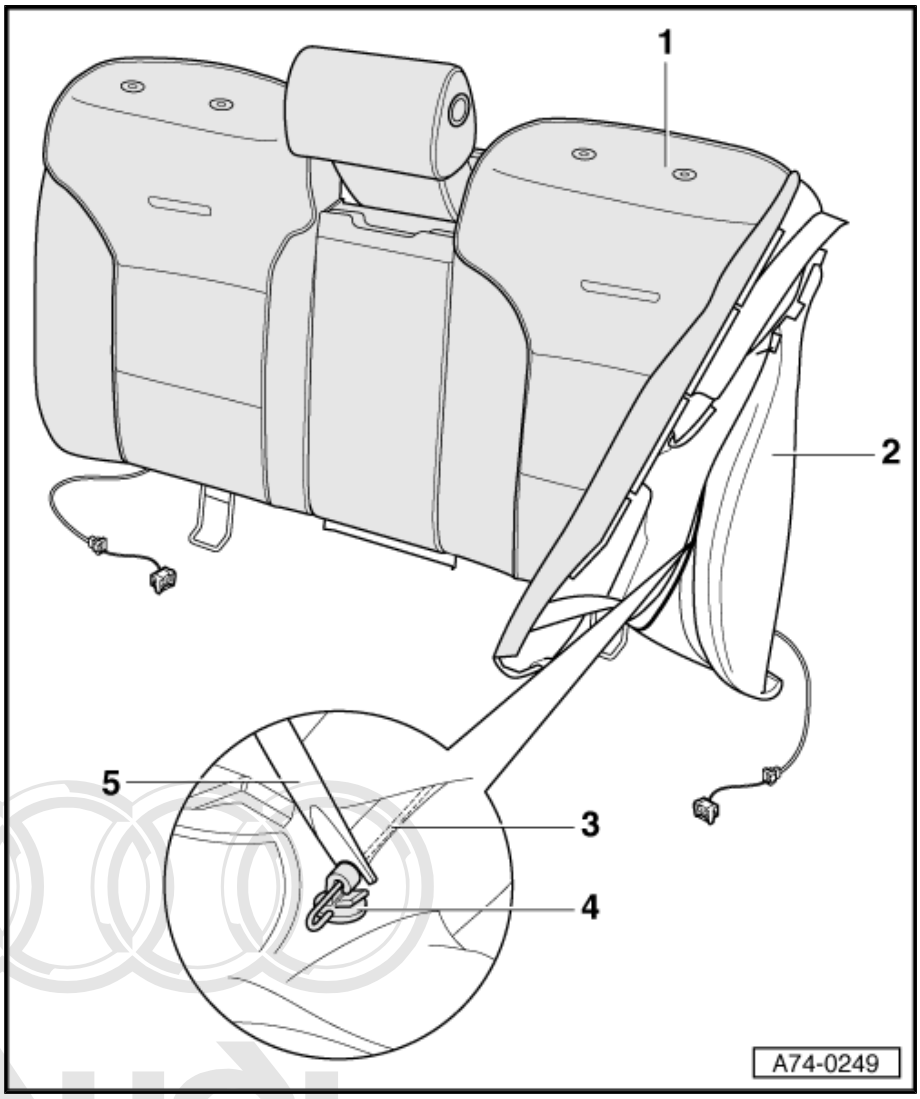

Protected by copyright. Copying for private or commercial purposes, in part or in whole, is not permitted unless authorised by AUDI AG. AUDI AG does not guarantee or accept any liability with respect to the correctness of information in this document. Copyright by AUDI AG.

2.3 Removing head restraint guides with backrest in position

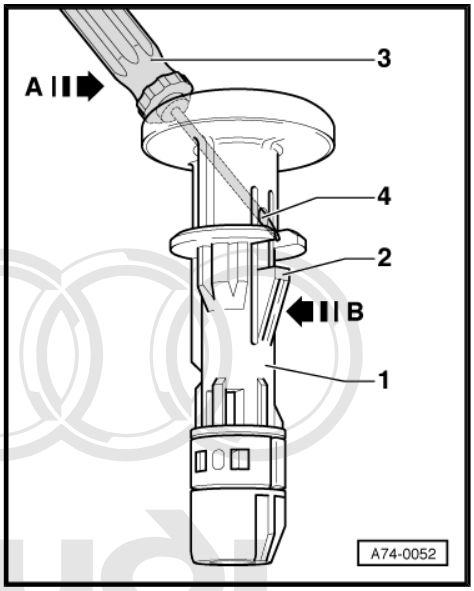

Note

For greater clarity, the head restraint guide -1- has been removed in the illustration.

♦ Removing

– Insert an upholstery needle or screwdriver -3- with a max. width of 2 mm in the hole -4- (the hole -4- is located opposite the fastener of the head restraint guide).

– Applying a screwdriver -3- in the direction of arrow -A-, press the retainer tab -2- in the direction of arrow -B- and pull out the head restraint guide -1-.

♦ Installing

– Make sure the head restraint guides with buttons are installed on the left side in the direction of travel.

2.4 Removing head restraint guides with backrest removed

Protected by copyright. Copying for private or commercial purposes, in part or in whole, is not permitted unless authorised by AUDI AG. AUDI AG does not guarantee or accept any liability with respect to the correctness of information in this document. Copyright by AUDI AG.

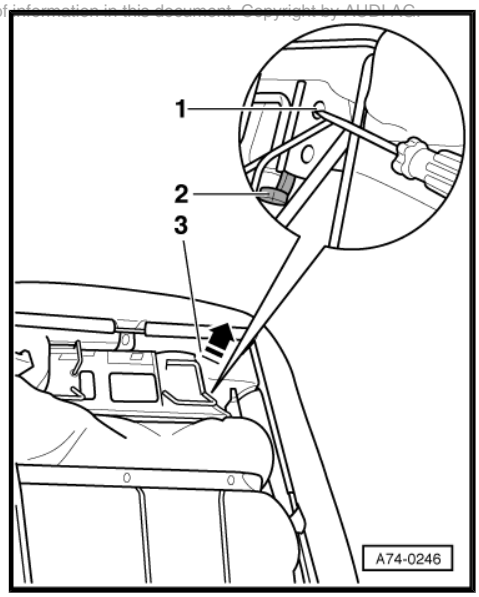

♦ Removing

– Remove the head restraint ⇒ page 337 .

– Press the padding -3- upwards in arrow direction.

Note

The openings for applying the screwdriver are always to be found on the outside.

– Use a screwdriver to prise out the head restraint guide -2- upwards through the opening -1-.

– Lift out the head restraint guide -2-.

♦ Installing

– Make sure the head restraint guides with buttons are installed on the left side in the direction of travel.

– Install the head restraint guide -2- in the reverse order of removal.

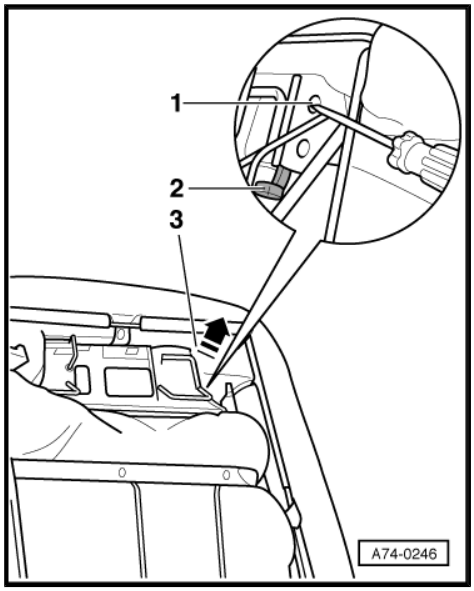

2.5 Removing and installing head restraint cover and padding

– Remove the head restraint ⇒ page 337 .

– Use a screwdriver to prise out the fastening strips -2- (4x).

– Detach the cover and padding -1-.

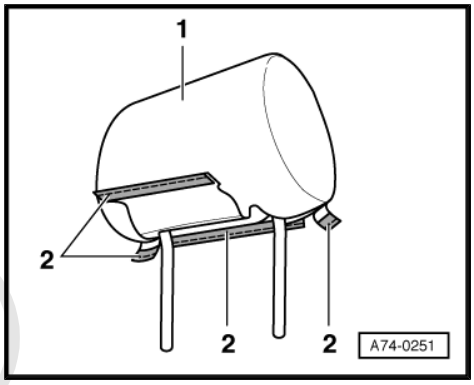

– Take the padding -2- out of the cover -3-.

♦ Installing:

– Insert the padding -2- in the proper position in the cover -3-.

– Slide the head restraint mount -1- into the padding with cover.

– Press the fastening strips firmly into the guide slot (check by pulling).

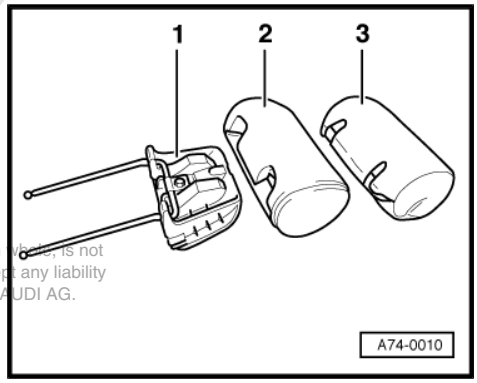

Protected by copyright. Copying for private or commercial purposes, in part or in whole, is not permitted unless authorised by AUDI AG. AUDI AG does not guarantee or accept any liability with respect to the correctness of information in this document. Copyright by AUDI AG.

3 Covers and padding for electrically operated individual rear seats

Block diagram

- ⇒ „3.1 Removing and installing cover and padding for seat pan“, page 377
- ⇒ „3.2 Removing and installing cover and padding for individual rear seat“, page 379
- ⇒ „3.3 Removing and installing centre section cover“, page 382
- ⇒ „3.4 Removing head restraint guides“, page 382
- ⇒ „3.5 Removing and installing head restraint cover and padding“, page 382
- ⇒ „3.6 Removing and installing seat heating element“, page 383
- ⇒ „3.7 Removing and installing backrest heating element“, page 383

Special tools and workshop equipment required

- Engine and gearbox support -VAS 6095-

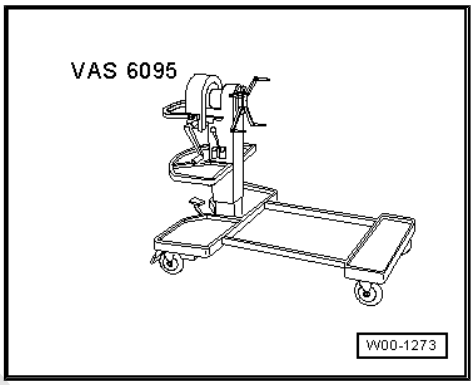

- Seat repair stand -VAS 6136-

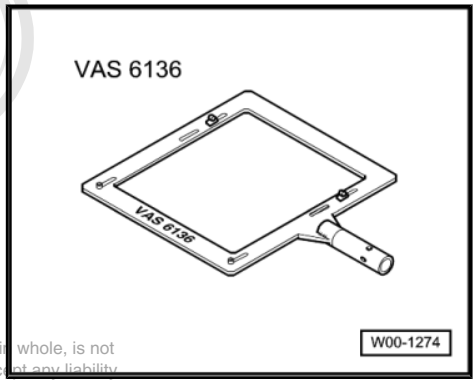

Protected by copyright. Copying for private or commercial purposes, in part or in whole, is not permitted unless authorised by AUDI AG. AUDI AG does not guarantee or accept any liability with respect to the correctness of information in this document. Copyright by AUDI AG.

3.1 Removing and installing cover and padding for seat pan

3.1.1 Separating cover and padding from seat pan

Special tools and workshop equipment required

- Upholstery clip pliers -V.A.G 1634-

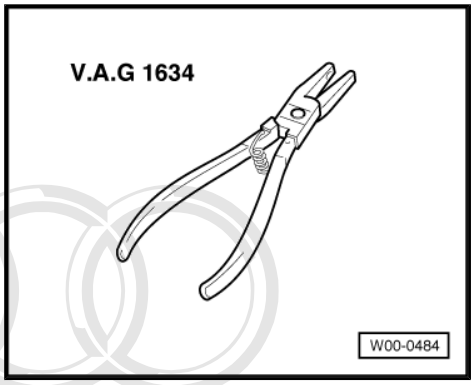

1 - Awl -V.A.G 1636A-
2 - Fastener
3 - Plastic clips
4 - Connector
5 - Upholstery clips (6x)
6 - Connector
7 - All-round fastening strips
8 - Cover and padding

- Removing
  - Remove the seat pan ⇒ page 342 .
  - Pinch off the upholstery clips -5- (6x).
  - Use a screwdriver to prise out the all-round fastening strips -7-.
  - Unplug the connectors -4- and -6-.
  - Detach the cover and padding -8-.
- Installing
  - Install the cover and padding -8- in the reverse order of removal.
  - Fit the new upholstery clips -5- using the upholstery clip pliers -V.A.G 1634- .

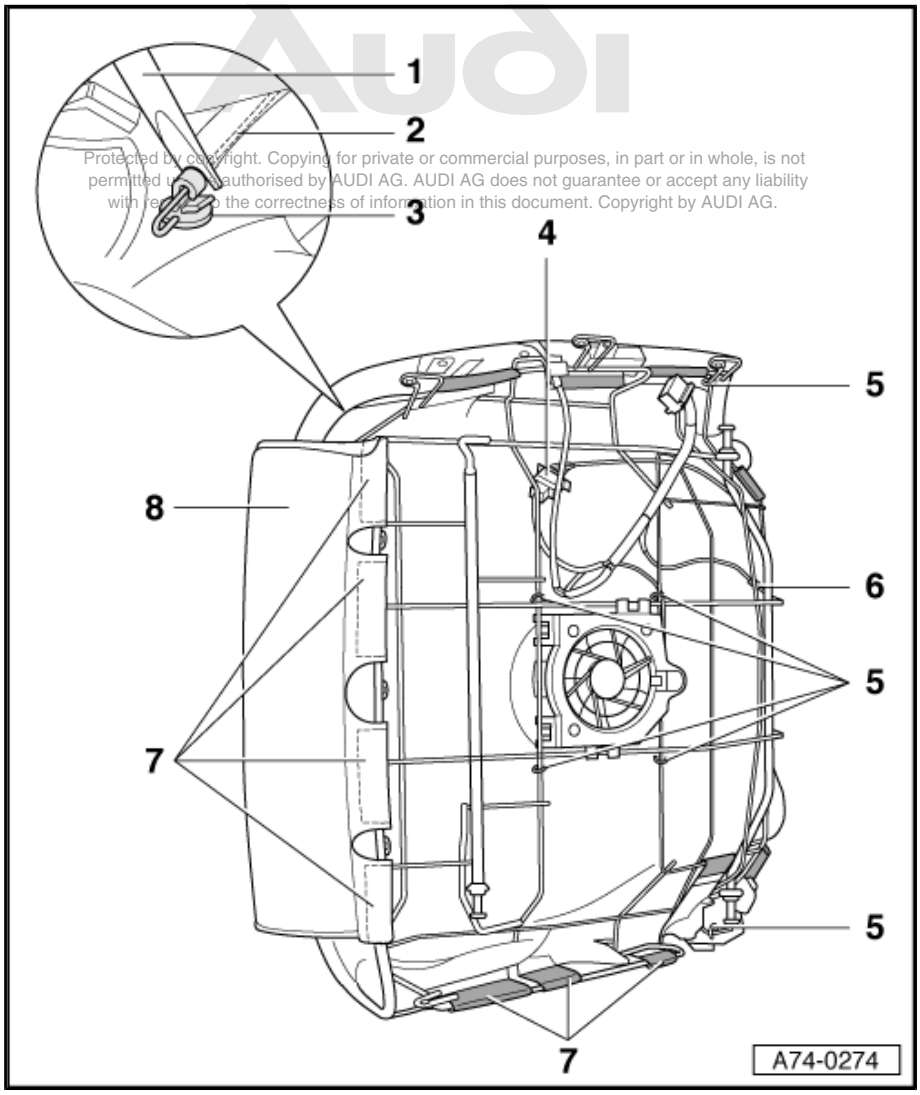

Protected by copyright. Copying for private or commercial purposes, in part or in whole, is not permitted unless authorised by AUDI AG. AUDI AG does not guarantee or accept any liability with respect to the correctness of information in this document. Copyright by AUDI AG.

3.1.2 Separating cover from padding

Special tools and workshop equipment required

♦ Awl -V.A.G 1636 A-

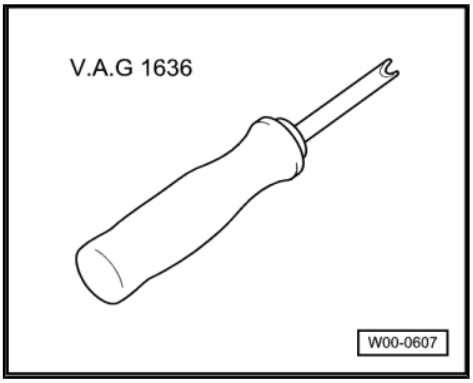

1 - Awl -V.A.G 1636A-
2 - Fastener
3 - Plastic clips
4 - Connector
5 - Upholstery clips (6x)
6 - Connector
7 - All-round fastening strips
8 - Cover and padding

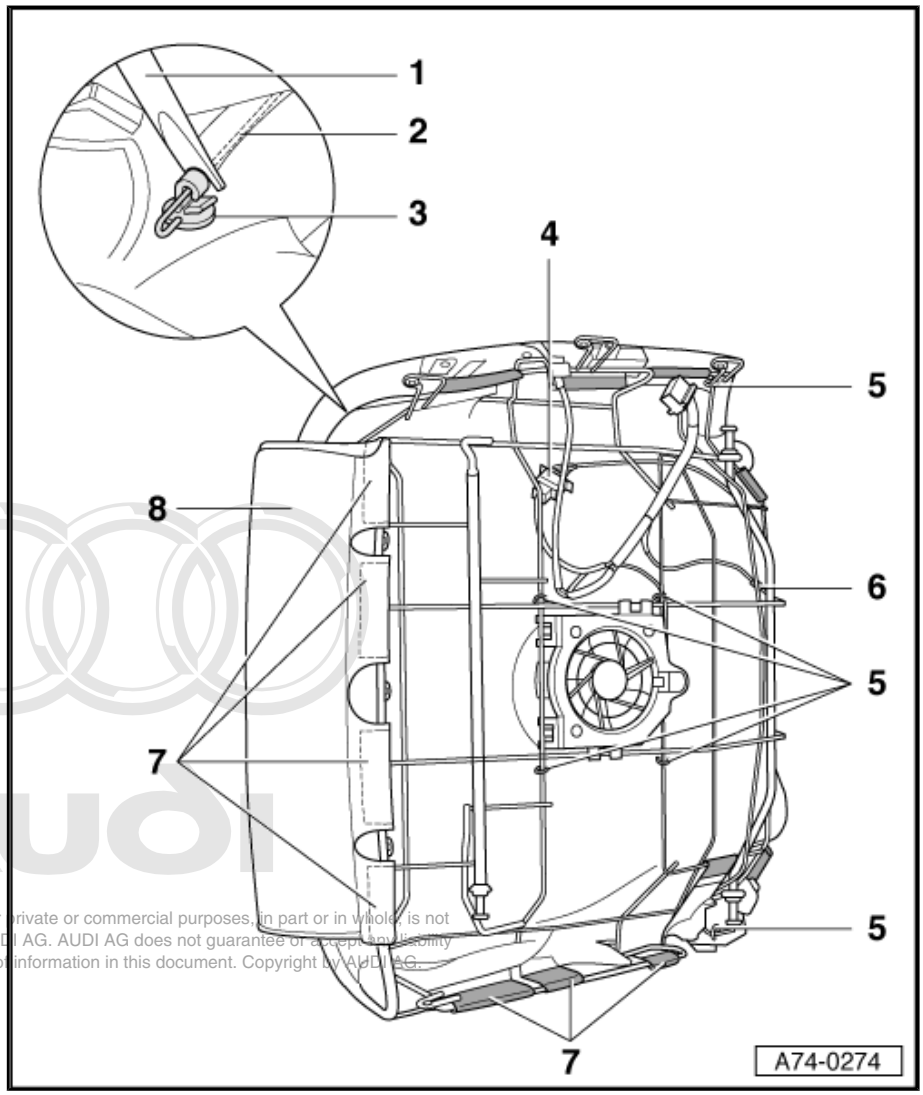

♦ Removing

– Use an awl -V.A.G 1636 A- -1- to carefully prise the fasteners -2- out of the plastic clips -3-.
– Detach the cover from the padding.

♦ Installing

– Fit the cover in the reverse order of removal.
– Replace damaged plastic clips -3-.
– Start by pressing the fasteners -2- of the transverse rods into the plastic clips -3-.

Protected by copyright. Copying for private or commercial purposes, in part or in whole, is not permitted unless authorised by AUDI AG. AUDI AG does not guarantee or accept any liability with respect to the correctness of information in this document. Copyright by AUDI AG.

3.2 Removing and installing cover and padding for individual rear seat

3.2.1 Detaching cover and padding from individual rear seat

Special tools and workshop equipment required

♦ Upholstery clip pliers -V.A.G 1634-

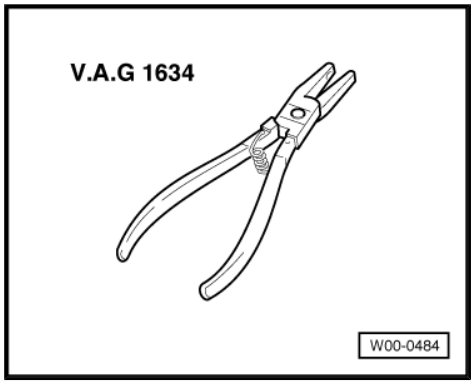

WARNING

Heed the safety regulations for pyrotechnic components ⇒ page 94 .

1 - Awl -V.A.G 1636 A-
2 - Fastener
3 - Plastic clips
4 - Backrest frame
5 - Rubber elements (2x)
6 - Side fastening strips (6x)
7 - Upholstery clips (4x)
8 - Lower fastening strips (5x)
9 - Backrest heating connector
10 - Fastening strip
11 - Cover and padding

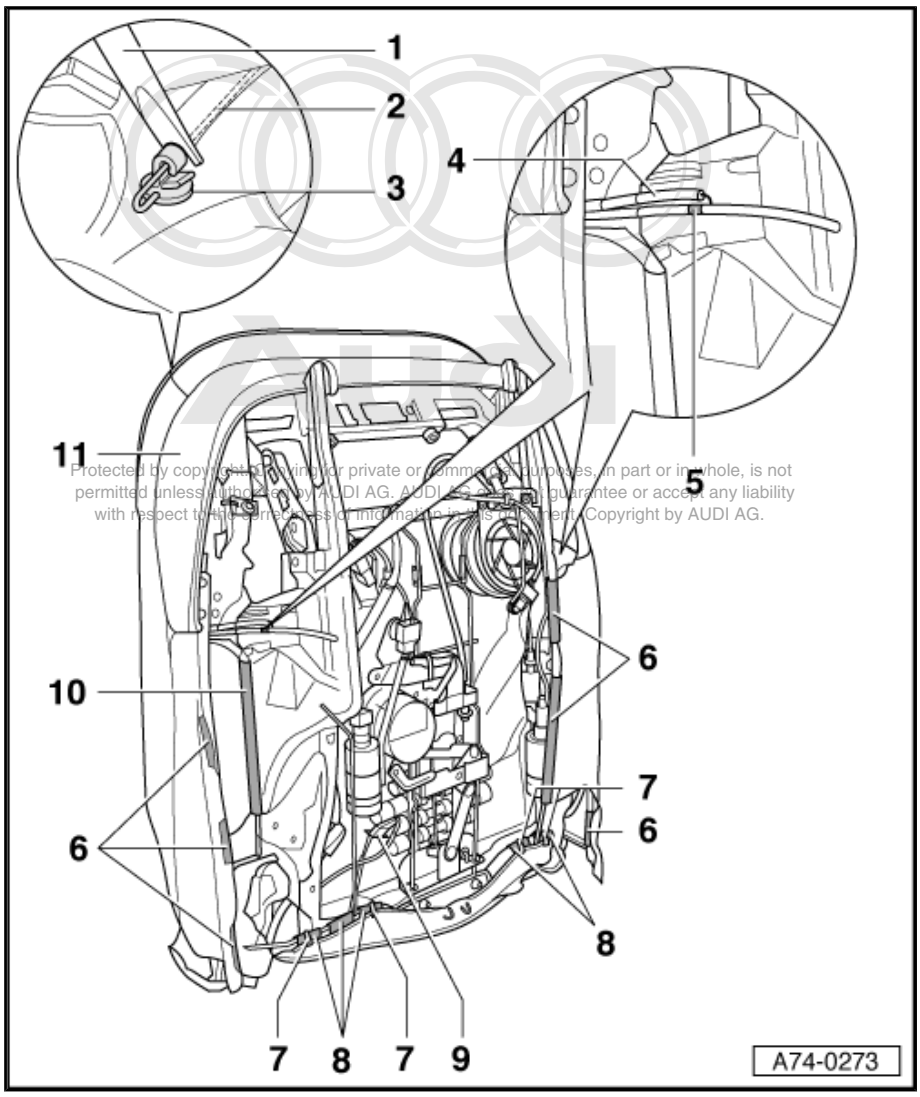

Protected by copyright. Copying for private or commercial purposes, in part or in whole, is not permitted unless authorised by AUDI AG. AUDI AG does not guarantee or accept any liability with respect to the correctness of information in this document. Copyright by AUDI AG.

♦ Removing

- Remove the seat pan ⇒ page 342 .
- Remove the individual rear seat ⇒ page 343 .
- Attach the holder for seat repair -VAS 6136- to the engine and gearbox holder -VAS 6095- .
- Attach the individual rear seat to the holder for seat repair -VAS 6136- .
- Remove the head restraint ⇒ page 358 .
- Remove the head restraint guides ⇒ page 382 .
- Use a screwdriver to prise out the side fastening strips -6- (6x).
- Unfasten the fastening strip -10-.
- Pinch off the upholstery clips -7- (4x).
- Use a screwdriver to prise out the lower fastening strips -8- (5x).
- Unplug the connector -9-.
- Disengage the rubber element -5- on the left and right from the backrest frame -4-.

- Installing
  - Install the cover and padding -11- in the reverse order of removal.
  - To fit new upholstery clips -7- use the upholstery clip pliers V.A.G 1634.

3.2.2 Separating cover from padding

Special tools and workshop equipment required

- Awl -V.A.G 1636 A-

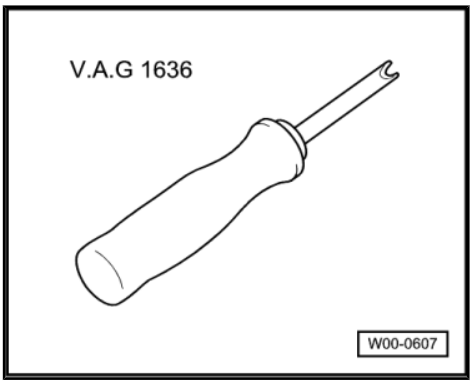

1 - Awl -V.A.G 1636 A-

2 - Fastener

3 - Plastic clips

4 - Backrest frame

5 - Rubber elements (2x)

6 - Side fastening strips (6x)

7 - Upholstery clips (4x)

8 - Lower fastening strips (5x)

9 - Backrest heating connector

10 - Fastening strip

11 - Cover and padding

- Removing
- Use an awl -V.A.G 1636 A- -1- to carefully prise the fasteners -2- out of the plastic clips -3-.
- Detach the cover from the padding.
- Installing
  - Fit the cover in the reverse order of removal.
  - Replace damaged plastic clips -3-.
  - Start by pressing the fasteners -2- of the transverse rods into the plastic clips -3-.

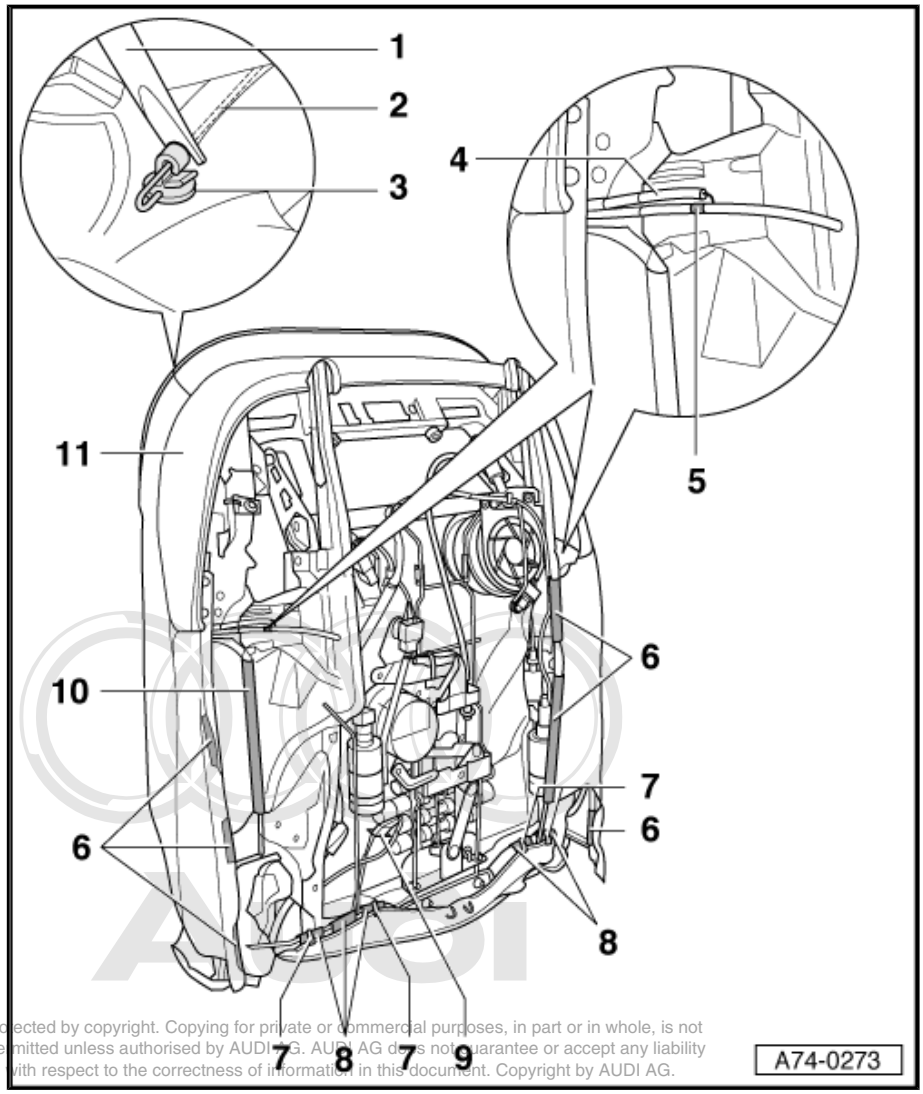

Protected by copyright. Copying for private or commercial purposes, in part or in whole, is not permitted unless authorised by AUDI AG. AUDI AG does not guarantee or accept any liability with respect to the correctness of information in this document. Copyright by AUDI AG.

3.3 Removing and installing centre section cover

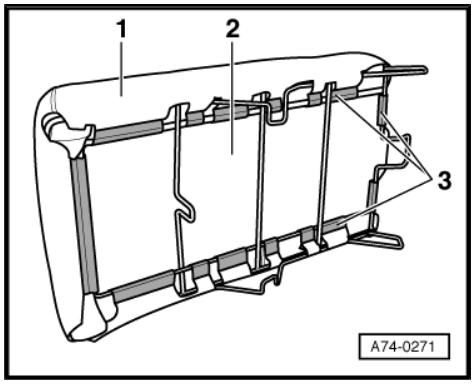

- ♦ Removing
- – Remove the centre section ⇒ page 341 .
- – Use a screwdriver to prise out the all-round fastening strips -3-.
- – Detach the cover -1- from the centre section -2-.
- ♦ Installing:
- – Fit the cover -1- in the reverse order of removal.

3.4 Removing head restraint guides

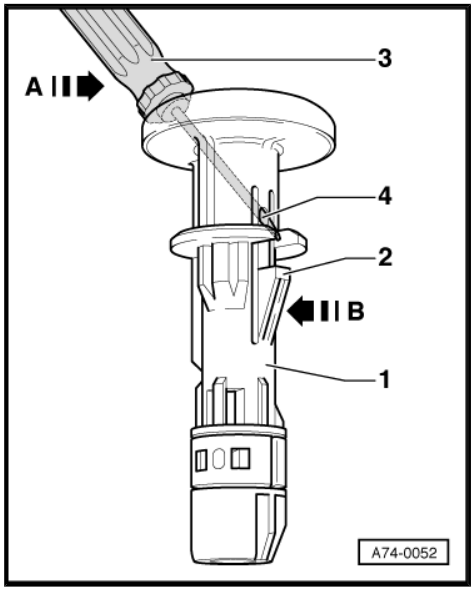

Note

For greater clarity, the head restraint guide -1- has been removed in the illustration.

- – Insert an upholstery needle or screwdriver -3- with a max. width of 2 mm in the hole -4- (the hole -4- is located opposite the fastener of the head restraint guide).
- – Whilst levering the screwdriver -3- in the direction of arrow -A- and pressing the retainer tab -2- in the direction of arrow -B-, pull out the head restraint guide -1-.

3.5 Removing and installing head restraint cover and padding

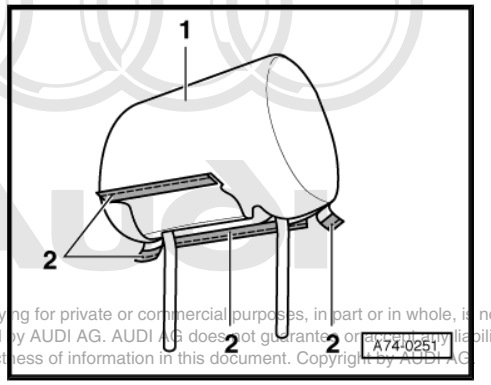

- ♦ Removing
- – Remove the head restraint ⇒ page 358 .
- – Use a screwdriver to prise out the fastening strips -2- (4x).
- – Detach the cover and padding -1-.

Protected by copyright. Copying for private or commercial purposes, in part or in whole, is not permitted unless authorised by AUDI AG. AUDI AG does not guarantee or assume any liability with respect to the correctness of information in this document. Copyright by AUDI AG.

– Take the padding -2- out of the cover -3-.

♦ Installing:

– Insert the padding -2- in the proper position in the cover -3-.

– Slide the head restraint mount -1- into the padding with cover.

– Press the fastening strips firmly into the guide slot (check by pulling).

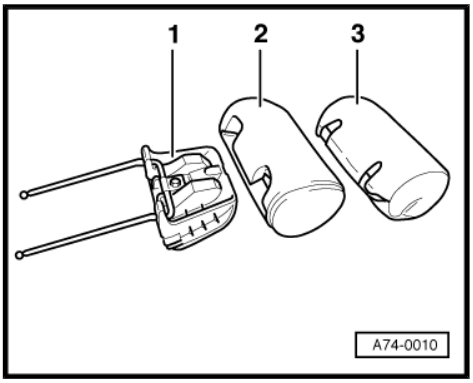

3.6 Removing and installing seat heating element

Note

The seat pan heating element is stitched to the cover. The cover must be replaced if the heating element is defective.

– Remove the seat pan ⇒ page 342 .

– Remove the seat pan cover and padding ⇒ page 377 .

– Separate the cover and padding ⇒ page 378 .

– Replace the cover with seat heating element.

3.7 Removing and installing backrest heating element

Note

The backrest heating element is stitched to the cover. The cover must be replaced if the heating element is defective.

– Remove the seat pan ⇒ page 342 .

– Remove the individual rear seat ⇒ page 343 .

– Attach the holder for seat repair -VAS 6136- to the engine and gearbox holder -VAS 6095- .

– Attach the individual rear seat to the holder for seat repair -VAS 6136- .

– Detach the cover and padding from the individual rear seat ⇒ page 379 .

– Separate the cover and padding ⇒ page 381 .

– Replace the cover with backrest heating element.

Protected by copyright. Copying for private or commercial purposes, in part or in whole, is not permitted unless authorised by AUDI AG. AUDI AG does not guarantee or accept any liability with respect to the correctness of information in this document. Copyright by AUDI AG.

76 – Gas, water, electricity

1 Servicing refrigerator box

1.1 Exploded view of components

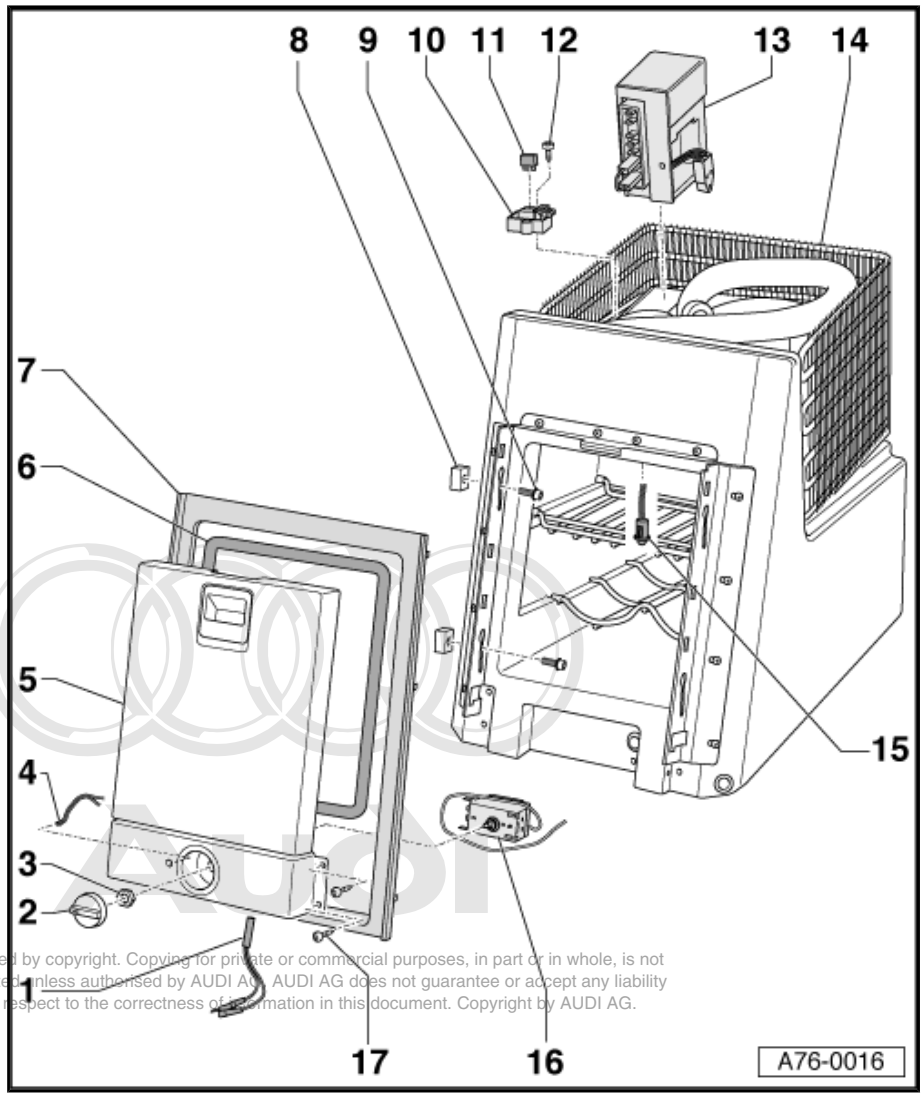

Protected by copyright. Copying for private or commercial purposes, in part or in whole, is not permitted unless authorised by AUDI AG. AUDI AG does not guarantee or accept any liability with respect to the correctness of information in this document. Copyright by AUDI AG.

1 - Contact switch
- ❑ For actuating interior light
- ❑ Removing and installing ⇒ page 387

2 - Rotary knob
- ❑ For thermostat

3 - 12 Nm

4 - Light-emitting diode (LED)
- ❑ For operation indicator
- ❑ Removing and installing ⇒ page 388

5 - Hinged cover for refrigerator box

6 - Seal

7 - Trim frame

8 - Clamping element

9 - 4 Nm

10 - Battery monitor
- ❑ Removing and installing ⇒ page 390

11 - Locking element

12 - 1.5 Nm

13 - Control unit for refrigerator box compressor
- ❑ Removing and installing ⇒ page 391

14 - Refrigerator box
- ❑ Removing and installing ⇒ page 385

15 - Light-emitting diode (LED)
- ❑ For refrigerator box interior light
- ❑ Removing and installing ⇒ page 390

16 - Thermostat
- ❑ With capillary tube
- ❑ Take care not to kink or damage capillary tube
- ❑ Removing and installing ⇒ page 386

17 - 1.5 Nm

1.2 Removing and installing refrigerator box

Removing

– Fold down the centre armrest and open the refrigerator box.
– Release the clips on the left and right -arrow 1-.
– Detach the trim frame at the refrigerator box -arrow 2-. This involves closing the hinged cover for the refrigerator box again slightly.

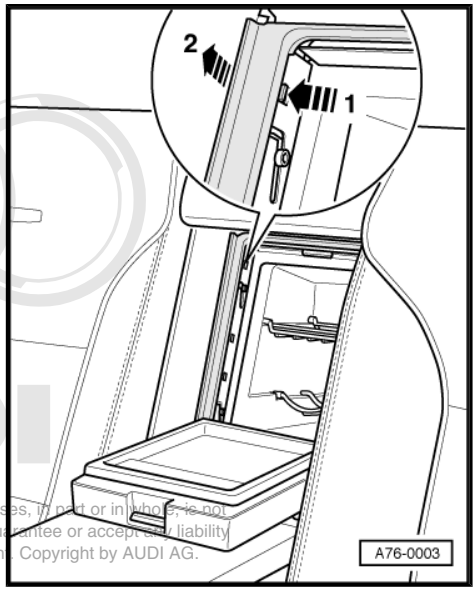

Protected by copyright. Copying for private or commercial purposes, in part or in whole, is not permitted unless authorised by AUDI AG. AUDI AG does not guarantee or accept any liability with respect to the correctness of information in this document. Copyright by AUDI AG.

– Slacken off the bolts -2- by approx. 2 turns.
– Pull out the clamping elements -1- over the guide.
– Open the luggage compartment and fold back the floor covering.

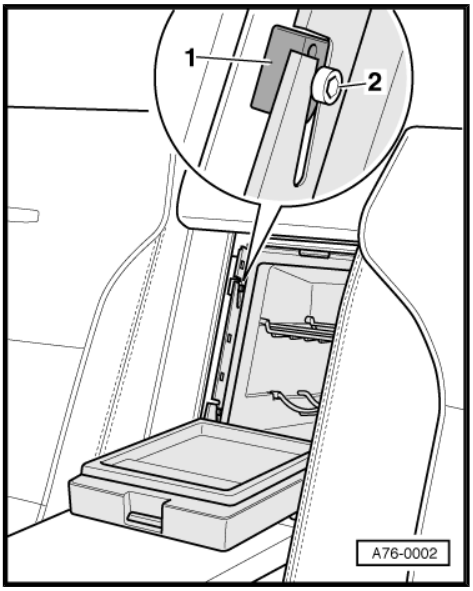

– Unplug the connector -arrow-.
– Take the refrigerator box -1- out of the luggage compartment.

Installing

Install in reverse order, paying attention to the following:

– Move the refrigerator box to the installation position.
– Open the refrigerator box.

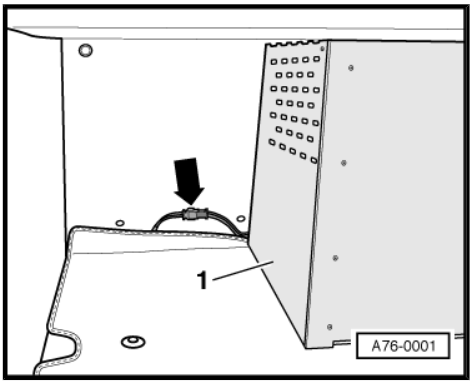

– Insert the clamping elements -1- with the bolts -2- screwed in into the guide at the refrigerator box.
– Push down the clamping elements as far as they will go.
– Pull the refrigerator box towards the rear seat backrest and push the clamping elements down as far as possible.
– Tighten the bolts.
– Fit the trim frame.

Tightening torque

Component	Nm
Clamping element to refrigerator box	4

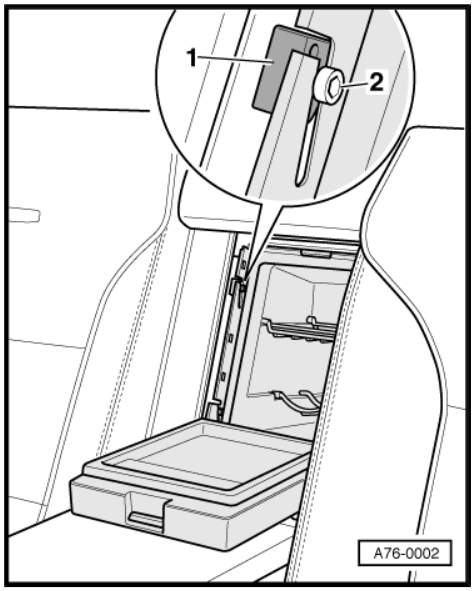

1.3 Removing and installing thermostat

Removing

Note

All cable ties unfastened or severed on removal are to be re-attached in the same position on installation.

– Remove the refrigerator box ⇒ page 385 .
– Pull off the rotary knob -1- for the thermostat.

Note

- *If stiff, use universal pliers to pull off the rotary knob.*
- *Wrap a cloth around the jaws of the pliers so as not to damage the rotary knob.*

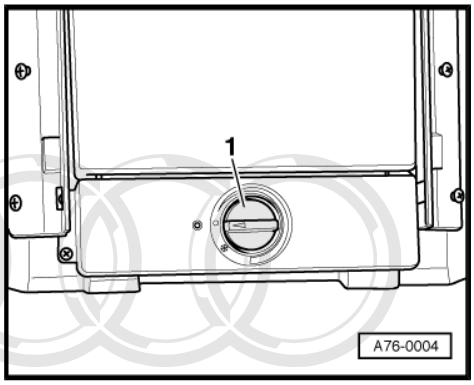

– Unscrew the nut -1- and screw out the bolts -arrows-.
– Detach the trim -2- with the hinged cover for the refrigerator box.

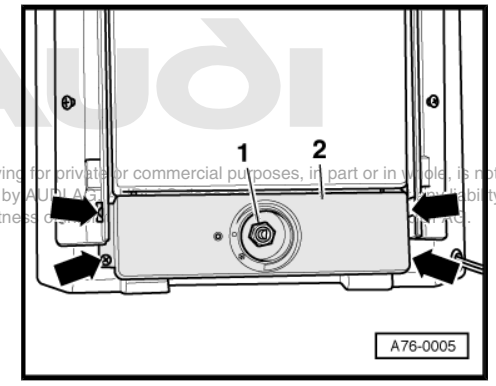

Protected by copyright. Copying for private or commercial purposes, in part or in whole, is not permitted unless authorised by AUDI AG. AUDI AG does not guarantee or assume liability with respect to the correctness of information.

– Unplug the connectors -1 ... 4-.

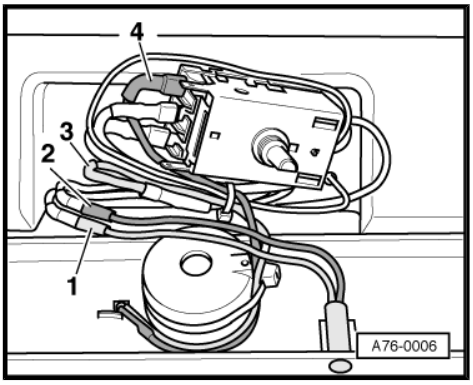

– Unplug the connectors -1- and -4-.
– Carefully pull the capillary tube -3- out of the refrigerator box housing -arrow- and detach the thermostat -2-.

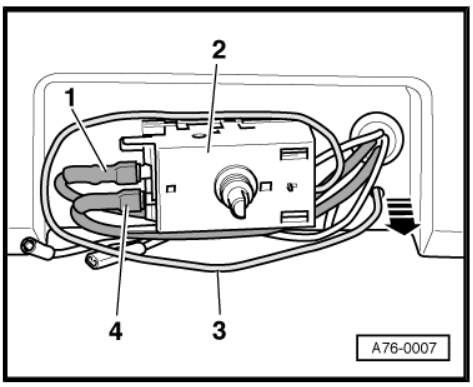

Installing

Install in reverse order, paying attention to the following:

Note

- *Take care not to kink or damage the capillary tube.*
- *The thermostat must be replaced if the capillary tube is kinked or damaged.*
- *Re-attach all cable ties in the same locations on installation.*

– Slide the capillary tube -3- approx. 66 cm into the hole.
– Make sure the locator at the thermostat -2- engages in the hole at the trim -1- -arrows-.

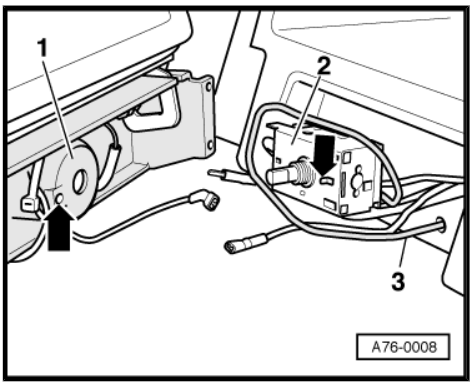

Tightening torques

Component	Nm
Thermostat to trim	12
Trim to housing	1.5

1.4 Removing and installing contact switch for refrigerator box interior light

Removing

Note

All cable ties unfastened or severed on removal are to be re-attached in the same position on installation.

– Remove the refrigerator box ⇒ page 385 .

Protected by copyright. Copying for private or commercial purposes, in part or in whole, is not permitted unless authorised by AUDI AG. AUDI AG does not guarantee or accept any liability with respect to the correctness of information in this document. Copyright by AUDI AG.

– Pull off the rotary knob -1- for the thermostat.

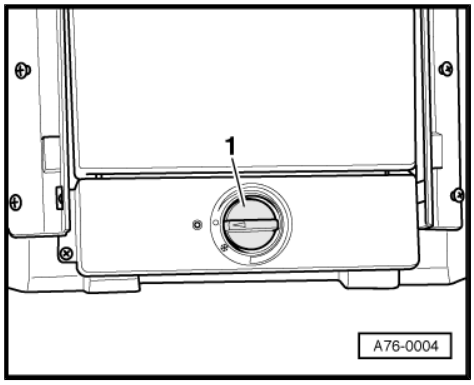

Note

- *If stiff, use universal pliers to pull off the rotary knob.*
- *Wrap a cloth around the jaws of the pliers so as not to damage the rotary knob.*

– Unscrew the nut -1- and screw out the bolts -arrows-.

– Detach the trim -2- with the hinged cover for the refrigerator box.

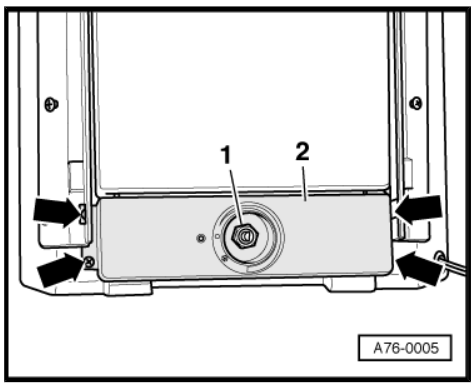

– Unplug the connectors -1- and -4-.

Protected by copyright. Copyright by AUDI AG.

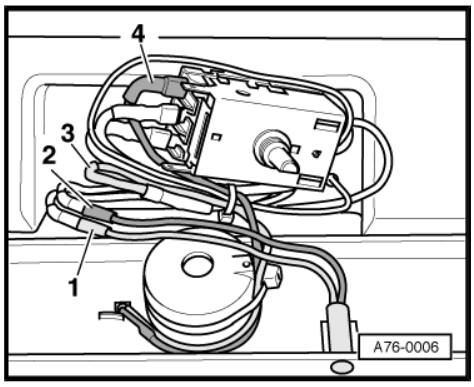

– Take the contact switch -arrow- for the refrigerator box interior light out of the trim.

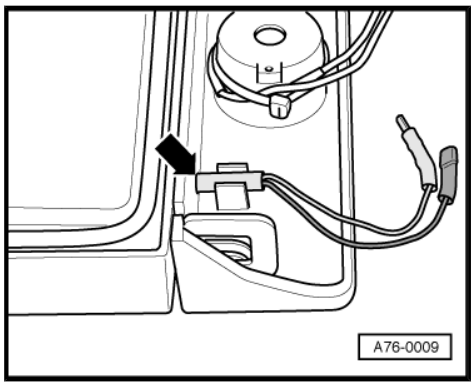

Installing

Install in reverse order, paying attention to the following:

Note

Re-attach all cable ties in the same locations on installation.

Tightening torques

Component	Nm
Thermostat to trim	12
Trim to housing	1.5

1.5 Removing and installing LED for operation indicator

Removing

Note

All cable ties unfastened or severed on removal are to be re-attached in the same position on installation.

– Remove the refrigerator box ⇒ page 385 .

– Pull off the rotary knob -1- for the thermostat.

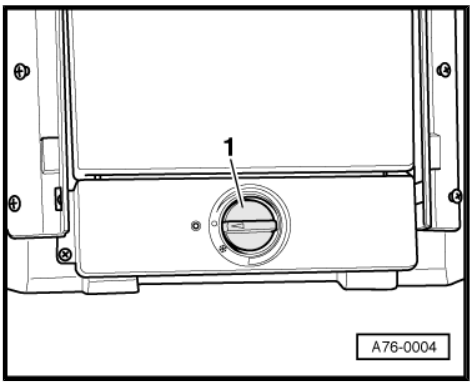

Note

- *If stiff, use universal pliers to pull off the rotary knob.*
- *Wrap a cloth around the jaws of the pliers so as not to damage the rotary knob.*

– Unscrew the nut -1- and screw out the bolts -arrows-.

– Detach the trim -2- with the hinged cover for the refrigerator box.

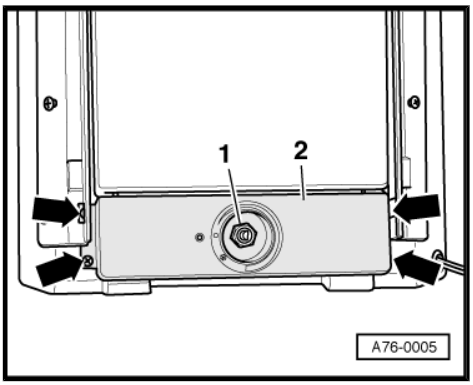

– Unplug the connectors -1- and -4-.

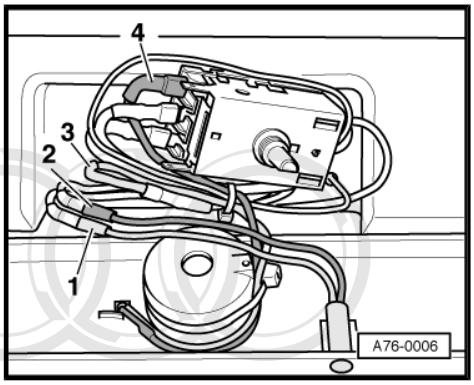

Protected by copyright. Copying for private or commercial purposes, in part or in whole, is not permitted unless authorised by AUDI AG. AUDI AG does not guarantee or accept any liability with respect to the correctness of information in this document. Copyright by AUDI AG.

– Carefully press the locking lever -2- aside and press the LED -1- for the operation indicator to the rear out of the trim -arrow-.

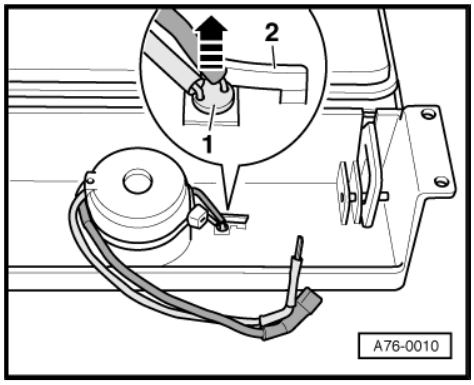

Installing

Install in reverse order, paying attention to the following:

Note

Re-attach all cable ties in the same locations on installation.

Tightening torques

Component	Nm
Thermostat to trim	12
Trim to housing	1.5

1.6 Removing and installing LED for refrigerator box interior light

Removing

– Remove the refrigerator box ⇒ page 385 .

– Open the hinged cover for the refrigerator box.

– Unplug the connector -2- and unfasten the bolted joint -1-.

– Press the LED for the refrigerator box interior light inwards into the refrigerator -arrow-.

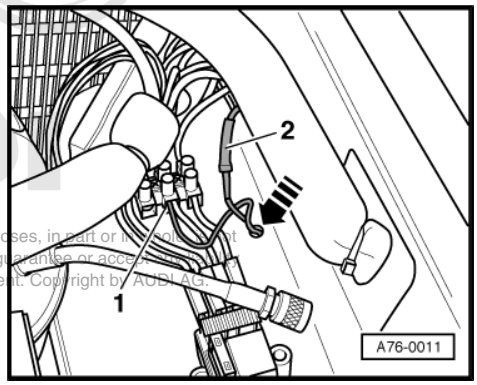

Protected by copyright. Copying for private or commercial purposes, in part or in whole, is not permitted unless authorised by AUDI AG. AUDI AG does not guarantee or accept any liability with respect to the correctness of information in this document. Copyright by AUDI AG.

– Pull the LED -1- out of the holder -2-.

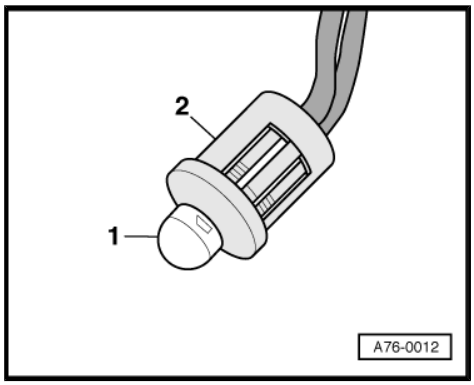

Installing

Install in reverse order, paying attention to the following:

– Press on the holder for the interior light until it engages.

1.7 Removing and installing battery monitor

Removing

– Remove the refrigerator box ⇒ page 385 .

Note

Mark the wires before detaching.

– Unplug the connectors -1-, -2-, -4- and -5-.
– Screw out the bolts -arrows-.
– Detach the battery monitor -3-.

Installing

Install in reverse order.

Tightening torque

Component	Nm
Battery monitor to housing	1.5

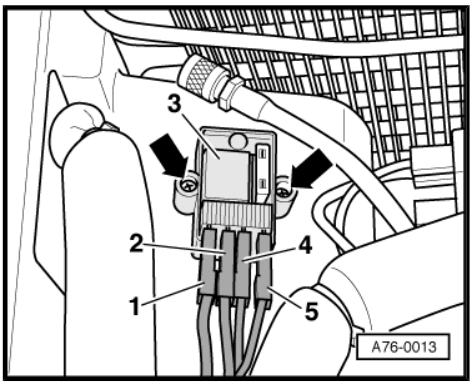

1.8 Removing and installing control unit for refrigerator box compressor

Removing

– Remove the refrigerator box ⇒ page 385 .
– Twist and pull the control unit off the holder -arrow 1-.
– Lift off the control unit -arrow 2-.

Protected by copyright. Copying for private or commercial purposes, in part or in whole, is not permitted unless authorised by AUDI AG. AUDI AG does not guarantee or accept any liability with respect to the correctness of information in this document. Copyright by AUDI AG.

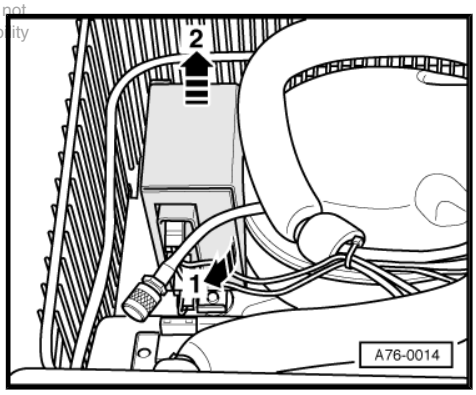

– Press the connector -2- off the compressor in arrow direction.
– Unplug the connectors -1- at the control unit.

Installing
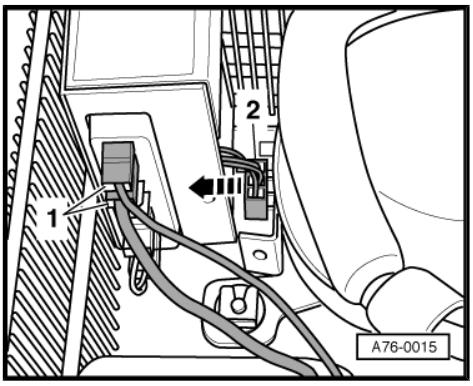
Install in reverse order.