Workshop Manual
Audi A8 2003 ➢
Communication

Edition 10.2009

Protected by copyright. Copying for private or commercial purposes, in part or in whole, is not permitted unless authorised by AUDI AG. AUDI AG does not guarantee or accept any liability with respect to the correctness of information in this document. Copyright by AUDI AG.

List of Workshop Manual Repair GroupsList of Workshop Manual Repair GroupsList of Workshop Manual Repair Groups

Repair Group

91 - Communication

Protected by copyright. Copying for private or commercial purposes, in part or in whole, is not permitted unless authorised by AUDI AG. AUDI AG does not guarantee or accept any liability with respect to the correctness of information in this document. Copyright by AUDI AG.

Technical information should always be available to the foremen and mechanics, because their careful and constant adherence to the instructions is essential to ensure vehicle road-worthiness and safety. In addition, the normal basic safety precautions for working on motor vehicles must, as a matter of course, be observed.

All rights reserved.
No reproduction without prior agreement from publisher.

Copyright © 2010 Audi AG, Ingolstadt

Contents

91 - Communication 1
1 Communication system 1
1.1 General notes (up to week 35/08) 1
1.2 General notes on the MMI system (from week 36/08 onwards) 2
1.3 MMI (up to week 35/08) - layout 6
1.4 MMI (from week 36/08 onwards) - layout 8
1.5 Connectors for MMI (up to model year 2007) 9
1.6 Connectors for MMI (from model year 2008 onwards, up to week 35/08) 10
1.7 Connectors for MMI (from week 36/08 onwards) 11
1.8 Connectors on multimedia system operating unit E380 14
1.9 Connectors for display (from week 36/08 onwards) 14
1.10 Connectors on data bus diagnostic interface J533 15
1.11 Microphone unit in front roof module R164 - overview 16
1.12 MMI (from week 36/08 onwards) - overview of fitting locations 19
1.13 Removing and installing control unit for front display and information control panel J523 (up to week 35/08) 19
1.14 Removing and installing control unit 1 for information electronics J794 (from week 36/08 onwards) 21
1.15 Removing and installing data bus diagnostic interface J533 22
1.16 Removing and installing display 23
1.17 Removing and installing multimedia system operating unit E380 26
1.18 Removing and installing operating unit in front of centre console E461 27
2 Communication system (USA) 29
2.1 General notes (up to week 21/09) 29
2.2 General notes (from week 22/09 onwards) 29
2.3 MMI (up to week 21/09) - layout 34
2.4 MMI (from week 22/09 onwards) - layout 36
2.5 Connectors for MMI (from week 22/09 onwards) 37
2.6 Microphone unit in front roof module R164 - overview 39
2.7 MMI (from week 22/09 onwards) - overview of fitting locations 42
3 Communication system (Japan) 43
3.1 General notes (up to week 21/09) 43
3.2 General notes (from week 22/09 onwards) 43
3.3 MMI (up to model year 2007) - layout 48
3.4 MMI (from model year 2008 onwards, up to week 21/09) - layout 50
3.5 Connectors for MMI (from model year 2008 onwards, up to week 21/09) 51
3.6 Connectors for MMI (from week 22/09 onwards) 53
3.7 Connectors on display and operating unit changeover unit J728 (up to model year 2007) 56
3.8 Connectors on MiniDisc player R153 56
3.9 Microphone unit in front roof module R164 - overview 57
3.10 MMI (from week 22/09 onwards) - overview of fitting locations 60
3.11 Removing and installing display and operating unit changeover unit J728 60
3.12 Removing and installing MiniDisc player R153 61
4 Radio system 63
4.1 General notes (up to week 35/08) 63
4.2 General notes (from week 36/08 onwards) 63
4.3 Standard radio system (up to week 35/08) - layout 65
4.4 Standard radio system (from week 36/08 onwards) - layout 66
4.5 BOSE/BOSE 6000 radio system (up to week 35/08) - layout 67
4.6 BOSE 6000 sound system (from week 36/08 onwards) - layout 68
4.7 Bang & Olufsen sound system - layout 69
4.8 Connectors on radio R (up to week 35/08) 70

Copyright by AUDI AG. All rights reserved. Reproduction of this document or parts thereof for commercial purposes, in part or in whole, is not permitted unless authorised by AUDI AG. AUDI AG does not guarantee or accept any liability with respect to the correctness of information in this document. Copyright by AUDI AG.

4.9 Connectors on radio R (from week 36/08 onwards) . . . 71
4.10 Connectors on digital sound package control unit J525 (Standard) . . . 73
4.11 Connectors on digital sound package control unit J525 (BOSE) . . . 74
4.12 Connectors on digital sound package control unit J525 (BOSE 6000) . . . 75
4.13 Connectors on digital sound package control unit J525 (Bang & Olufsen) . . . 77
4.14 Connectors on digital sound package control unit 2 J787 (Bang & Olufsen) . . . 78
4.15 Connectors on CD changer R41 . . . 80
4.16 Connectors on CD player R89 . . . 80
4.17 Connectors on MiniDisc player R153 . . . 81
4.18 Connectors on connection for external audio sources R199 (AMI) (up to week 35/08) . . . 82
4.19 Connectors on connection for external audio sources R199 (interface) . . . 83
4.20 Connectors on digital radio R147 (up to week 35/08) . . . 83
4.21 Aerials . . . 84
4.22 Overview of fitting locations . . . 90
4.23 Removing and installing loudspeakers in doors . . . 92
4.24 Removing and installing loudspeakers in dash panel . . . 95
4.25 Removing and installing loudspeakers in rear shelf . . . 96
4.26 Removing and installing digital sound package control unit J525 (Standard) (up to model year 2005) . . . 99
4.27 Removing and installing digital sound package control unit J525 (Standard) (from model year 2006 onwards, up to week 35/08) . . . 101
4.28 Removing and installing digital sound package control unit J525 (BOSE) (up to model year 2005) . . . 102
4.29 Removing and installing digital sound package control unit J525 (BOSE) (from model year 2006 onwards) . . . 104
4.30 Removing and installing digital sound package control unit J525 (BOSE 6000) . . . 105
4.31 Removing and installing digital sound package control unit J525 (Bang & Olufsen) . . . 106
4.32 Removing and installing digital sound package control unit 2 J787 (Bang & Olufsen) . . . 108
4.33 Removing and installing radio R . . . 109
4.34 Removing and installing digital radio R147 (up to week 35/08) . . . 114
4.35 Removing and installing CD changer R41 / CD player R89 . . . 116
4.36 Removing and installing connection for external audio sources R199 (up to week 35/08) . . . 117
4.37 Removing and installing aerial amplifier R24 (up to week 35/08) . . . 119
4.38 Removing and installing aerial amplifier R24 (from week 36/08 onwards) . . . 119
4.39 Removing and installing auxiliary heater aerial R182 . . . 120
4.40 Removing and installing roof aerial R216 . . . 120
4.41 Removing and installing roof aerial R216 (USA) . . . 121
4.42 Removing and installing GPS aerial R50 . . . 122

5 Radio system (USA) . . . 124
5.1 General notes (up to week 21/09) . . . 124
5.2 General notes (from week 22/09 onwards) . . . 124
5.3 BOSE/BOSE 6000 radio system (up to week 21/09) - layout . . . 126
5.4 BOSE 6000 sound system (from week 22/09 onwards) - layout . . . 127
5.5 Bang & Olufsen sound system . . . 128
5.6 Connectors on satellite radio R146 (up to week 21/09) . . . 129
5.7 Connectors on radio R (from week 22/09 onwards) . . . 130
5.8 Overview of fitting locations . . . 132
5.9 Removing and installing satellite radio R146 (up to model year 2005) . . . 134
5.10 Removing and installing satellite radio R146 (from model year 2006 onwards, up to week 21/09) . . . 135
5.11 Removing and installing satellite radio R146 on vehicles with RSE "light" . . . 136

6 Telephone system . . . 138
6.1 General notes (up to week 35/08) . . . 138
6.2 General notes (from week 36/08 onwards) . . . 139
6.3 Permanently installed telephone system (up to week 35/08) - layout . . . 141
6.4 Mobile phone pre-installation (up to week 35/08) - layout . . . 142

Protected by copyright. Copying for private or commercial purposes, in part or in whole, is not permitted unless authorised by AUDI AG. AUDI AG does not guarantee or accept any liability with respect to the correctness of information in this document. Copyright by AUDI AG.

6.5 Mobile phone pre-installation (from week 36/08 onwards) - layout . . . 143
6.6 Bluetooth car phone (up to week 35/08) - layout . . . 144
6.7 Bluetooth car phone (from week 36/08 onwards) - layout . . . 145
6.8 Pre-fitted components for mobile phone installation - layout . . . 145
6.9 Bluetooth hands-free system - layout . . . 146
6.10 Microphone unit in front roof module R164 - overview . . . 146
6.11 Connectors for permanently installed telephone system (up to week 35/08) . . . 148
6.12 Connectors for mobile phone pre-installation (up to week 35/08) . . . 149
6.13 Connectors for mobile phone pre-installation (from week 36/08 onwards) . . . 151
6.14 Connectors for Bluetooth car phone (up to week 35/08) . . . 153
6.15 Connectors for Bluetooth car phone (from week 36/08 onwards) . . . 154
6.16 Connectors for aerial amplifier for mobile telephone R86 (up to model year 2008) . . . 156
6.17 Connectors for aerial amplifier for mobile telephone R86 (from model year 2009 onwards) . . . 156
6.18 Connector for pre-fitted components for mobile phone installation . . . 157
6.19 Connectors for Bluetooth hands-free system . . . 157
6.20 Overview of fitting locations (up to week 35/08) . . . 159
6.21 Overview of fitting locations (from week 36/08 onwards) . . . 160
6.22 Removing and installing telephone bracket R126 (centre console) . . . 161
6.23 Removing and installing telephone bracket R126 (front centre armrest) . . . 162
6.24 Removing and installing telephone bracket R126 (rear centre armrest) . . . 163
6.25 Adapting telephone handset R37 (permanently installed telephone) . . . 164
6.26 Removing and installing aerial for Bluetooth R152 (centre console) . . . 165
6.27 Removing and installing telephone transmitter and receiver unit R36 . . . 166
6.28 Removing and installing aerial amplifier for mobile telephone R86 . . . 167
6.29 Removing and installing microphone unit in front roof module R164 . . . 168

7 Telephone system (USA) . . . 169
7.1 General notes (up to week 21/09) . . . 169
7.2 General notes (from week 36/08 onwards) . . . 169
7.3 Mobile phone pre-installation with telematics - layout . . . 170
7.4 Mobile phone pre-installation without telematics (up to week 21/09) - layout . . . 171
7.5 Mobile phone pre-installation (from week 22/09 onwards) - layout . . . 172
7.6 Bluetooth hands-free system - layout . . . 173
7.7 Connectors for mobile phone pre-installation with telematics . . . 173
7.8 Connectors for mobile phone pre-installation (up to week 21/09) . . . 175
7.9 Connectors for mobile phone pre-installation (from week 22/09 onwards) . . . 176
7.10 Connectors for Bluetooth hands-free system . . . 178
7.11 Overview of fitting locations (up to week 21/09) . . . 180
7.12 Overview of fitting locations (from week 22/09 onwards) . . . 181
7.13 Removing and installing telephone and telematics control unit J526 . . . 182
7.14 Removing and installing mobile telephone operating electronics control unit J412 . . . 182

8 Telephone system (Japan) . . . 185
8.1 General notes (up to week 21/09) . . . 185
8.2 General notes (from week 22/09 onwards) . . . 185
8.3 Mobile phone pre-installation (up to model year 2007) - layout . . . 186
8.4 Mobile phone pre-installation (from model year 2008 onwards, up to week 21/09) - layout . . . 187
8.5 Bluetooth hands-free system (from week 22/09 onwards) - layout . . . 188
8.6 Connectors (up to week 21/09) . . . 189
8.7 Connectors for Bluetooth hands-free system (from week 22/09 onwards) . . . 190
8.8 Overview of fitting locations (up to week 21/09) . . . 192
8.9 Overview of fitting locations (from week 22/09 onwards) . . . 193
8.10 Removing and installing telephone transmitter and receiver unit R36 . . . 193

9 Navigation system . . . 195
9.1 General notes (up to week 35/08) . . . 195
9.2 General notes (from week 36/08 onwards) . . . 195

Protected by copyright. Copying for private or commercial purposes, in part or in whole, is not permitted unless authorised by AUDI AG. AUDI AG does not guarantee or accept any liability with respect to the correctness of information in this document. Copyright by AUDI AG.

9.3 Navigation system (up to week 35/08) - layout . . . 196
9.4 Navigation system (from week 36/08 onwards) - layout . . . 197
9.5 Connectors for navigation system (up to week 35/08) . . . 197
9.6 Connectors for navigation system (from week 36/08 onwards) . . . 198
9.7 Overview of fitting locations (up to week 35/08) . . . 200
9.8 Overview of fitting locations (from week 36/08 onwards) . . . 201
9.9 Removing and installing navigation system with CD drive control unit J401 . . . 201
10 Navigation system (Japan) . . . 204
10.1 General notes (up to week 21/09) . . . 204
10.2 General notes (from week 22/09 onwards) . . . 204
10.3 Navigation system (up to model year 2007) - layout . . . 205
10.4 Navigation system (from model year 2008 onwards, up to week 21/09) - layout . . . 206
10.5 Navigation system (from week 22/09 onwards) - layout . . . 207
10.6 Connectors for navigation system (up to model year 2007) . . . 208
10.7 Connectors for navigation system (from model year 2008 onwards, up to week 21/09) . . . 209
10.8 Connectors for navigation system (from week 22/09 onwards) . . . 211
10.9 Connector on chip card reader control unit J676 (up to week 21/09) . . . 214
10.10 Connector on chip card reader control unit J676 (from week 22/09 onwards) . . . 214
10.11 Overview of fitting locations (up to week 21/09) . . . 215
10.12 Overview of fitting locations (from week 22/09 onwards) . . . 216
10.13 Removing and installing traffic data aerial R173 . . . 216
10.14 Removing and installing chip card reader control unit J676 . . . 217
11 TV system . . . 219
11.1 General notes (up to week 35/08) . . . 219
11.2 General notes (from week 36/08 onwards) . . . 219
11.3 TV system (up to week 35/08) - layout . . . 220
11.4 TV system (from week 36/08 onwards) - layout . . . 221
11.5 Connectors on TV tuner R78 (analogue) . . . 221
11.6 Connectors on digital TV tuner R171 . . . 223
11.7 Connectors on TV tuner R78 (up to week 35/08) . . . 224
11.8 Connectors on TV tuner R78 (from week 36/08 onwards) . . . 226
11.9 Connectors on DVD player R7 . . . 227
11.10 Overview of fitting locations (up to week 35/08) . . . 228
11.11 Overview of fitting locations (from week 36/08 onwards) . . . 229
11.12 Removing and installing TV tuner R78 (analogue/hybrid) . . . 229
11.13 Removing and installing digital TV tuner R171 . . . 233
11.14 Removing and installing DVD player R7 . . . 238
12 TV system (Japan) . . . 240
12.1 General notes . . . 240
12.2 TV system, MMI (up to week 21/09) - layout . . . 241
12.3 TV system, MMI (from week 22/09 onwards) - layout . . . 242
12.4 Connectors on TV tuner R78 (up to week 21/09) . . . 243
12.5 Connectors on TV tuner R78 (from week 22/09 onwards) . . . 244
12.6 Overview of fitting locations (up to week 21/09) . . . 246
12.7 Overview of fitting locations (from week 22/09 onwards) . . . 247
12.8 Removing and installing TV card reader R204 . . . 247
13 TV system (China) . . . 249
13.1 General notes . . . 249
13.2 TV system, MMI - layout . . . 250
13.3 Connectors on TV tuner R78 . . . 250
13.4 Overview of fitting locations . . . 252
14 Multi-function steering wheel . . . 253
14.1 General notes . . . 253
14.2 Multi-function steering wheel - layout . . . 254
14.3 Removing and installing multi-function buttons . . . 255

Protected by copyright. Copying for private or commercial purposes, in part or in whole, is not permitted unless authorised by AUDI AG. AUDI AG does not guarantee or accept any liability with respect to the correctness of information in this document. Copyright by AUDI AG.

14.4 Removing and installing tiptronic buttons 255
14.5 Removing and installing steering wheel heater button E522 256
15 Multi-function steering wheel (USA) 258
15.1 General notes 258
15.2 Multi-function steering wheel - layout 259
16 Telematics (USA) 261
16.1 General notes 261
16.2 Telematics system - layout 262
16.3 Connectors on telephone/telematics control unit J526 263
16.4 Overview of fitting locations 265
16.5 Removing and installing telephone and telematics control unit J526 266
16.6 Removing and installing additional loudspeaker for telematics R91 266
16.7 Removing and installing telematics operating unit E264 267
17 Voice control system 268
17.1 General notes (up to week 35/08) 268
17.2 General notes (from week 36/08 onwards) 268
17.3 Voice control system (up to week 35/08) - layout 269
17.4 Layout in MMI (from week 36/08 onwards) 270
17.5 Connector on speech input control unit J507 (up to week 35/08) 271
17.6 Removing and installing speech input control unit J507 (up to week 35/08) 271
17.7 Removing and installing voice control system (from week 36/08 onwards) 272
18 RSE (Rear Seat Entertainment system) - high ALPINE 274
18.1 General notes 274
18.2 Fault messages 274
18.3 RSE system - high ALPINE - layout 276
18.4 Connectors on rear DVD changer R162 - ALPINE 277
18.5 Connectors on control units for display units 277
18.6 Connectors on multimedia system signal splitter R181 278
18.7 Overview of fitting locations 279
18.8 Removing and installing multimedia system display unit 1 control unit J744 280
18.9 Removing and installing multimedia system signal splitter R181 280
18.10 Removing and installing rear DVD changer R162 281
18.11 Removing and installing additional connections unit for video and audio R176 281
18.12 Removing and installing display units in head restraints 283
18.13 Removing and installing storage tray for remote controls 285
19 RSE plus (Rear Seat Entertainment system) - Blaupunkt (from model year 2007 onwards) 287
19.1 General notes 287
19.2 RSE plus system - Blaupunkt - layout 288
19.3 Connectors on rear DVD changer R162 (DVC 03) 289
19.4 Connectors on rear DVD changer R162 (DVC 06) 289
19.5 Connectors on multimedia system control unit J650 291
19.6 Wiring for multimedia system control unit J650 /display units/DVD 292
19.7 Wiring for multimedia system control unit/video connection/supply 295
19.8 Wiring for multimedia system control unit J650 / TV tuner R78 (hybrid) 298
19.9 Connectors on TV tuner R78 (hybrid) 300
19.10 Wiring for multimedia system control unit J650 / TV tuner R78 (analogue) 301
19.11 Connectors on TV tuner R78 (analogue) 303
19.12 Pin assignment on wiring for display unit underneath seat 304
19.13 Overview of fitting locations 305
19.14 Removing and installing multimedia system control unit J650 306
19.15 Removing and installing rear DVD changer R162 306
19.16 Removing and installing retainer for rear DVD changer R162 307
19.17 Removing and installing additional connections unit for video and audio R176 307
19.18 Removing and installing display units in head restraints 308

Reproduced by Audi AG. Copyright for the use of this material purposes, in part or in whole, is not permitted unless authorised by AUDI AG. AUDI AG does not guarantee or accept any liability with respect to the correctness of information in this document. Copyright by AUDI AG.

19.19 Removing and installing storage tray for remote controls 311
20 RSE "light" (Rear Seat Entertainment system) - (up to model year 2006) 313
20.1 General notes 313
20.2 RSE system "light" - layout 313
20.3 Connectors on rear DVD changer R162 314
20.4 Connectors on multimedia system signal splitter R181 314
20.5 Pin assignment on voltage supply wiring 315
20.6 Pin assignment on wiring for display unit underneath seat 315
20.7 Overview of fitting locations 316
20.8 Removing and installing rear DVD changer R162 316
20.9 Removing and installing multimedia system signal splitter R181 317
20.10 Removing and installing driver side volume button E374 318
20.11 Removing and installing display units in head restraints (up to 10/05) 318
20.12 Removing and installing display units in head restraints (from 11/05 onwards) 322
20.13 Removing and installing storage tray for remote controls 325
21 RSE (Rear Seat Entertainment system) - Blaupunkt (from model year 2007 onwards) . . 327
21.1 General notes 327
21.2 RSE system - Blaupunkt - layout 328
21.3 Connectors on rear DVD changer R162 (DVC 03) 329
21.4 Connectors on rear DVD changer R162 (DVC 06) 329
21.5 Connectors on multimedia system control unit J650 331
21.6 Wiring for multimedia system control unit J650 /display units/DVD 332
21.7 Wiring for multimedia system control unit/video connection/supply 335
21.8 Pin assignment of display unit wiring beneath seat 338
21.9 Overview of fitting locations 339
21.10 Removing and installing multimedia system control unit J650 339
21.11 Removing and installing rear DVD changer R162 340
21.12 Removing and installing retainer for rear DVD changer R162 341
21.13 Removing and installing additional connections unit for video and audio R176 341
21.14 Removing and installing display units in head restraints 342
21.15 Removing and installing storage tray for remote controls 345
22 MFCU (Multi-Function Communication Unit) 347
22.1 General notes 347
22.2 MFCU - layout 348
22.3 Connectors on fax unit control unit 348
22.4 Overview of fitting locations 350
22.5 Removing and installing aerial R11 351
22.6 Removing and installing rear right microphone R145 351
22.7 Removing and installing telephone and navigation system loudspeaker R39 351
22.8 Removing and installing fax unit control unit 352
22.9 Removing and installing rear charger unit for telephone R151 (rear centre armrest) 352
22.10 Removing and installing mounting for handset for fax unit 353
22.11 Removing and installing fax unit R73 353
22.12 Removing and installing fax unit contact switch F86 355
23 Reversing camera system 357
23.1 General notes 357
23.2 Reversing camera system (up to week 35/08) - layout 358
23.3 Reversing camera system (from week 36/08 onwards) - layout 359
23.4 Connectors on reversing camera system control unit J772 360
23.5 Overview of fitting locations 361
23.6 Removing and installing reversing camera system control unit J772 361
23.7 Removing and installing reversing camera R189 362
23.8 Calibrating reversing camera system 363

Protected by copyright. Copying for private or commercial purposes, in part or in whole, is not permitted unless authorised by AUDI AG. AUDI AG does not guarantee or accept any liability with respect to the correctness of information in this document. Copyright by AUDI AG.

91 – Communication

1 Communication system

1.1 General notes (up to week 35/08)

The components of the systems radio -R- , telephone transmitter and receiver unit -R36- , navigation system with CD drive control unit -J401- , speech input control unit -J507- , TV tuner -R78- , chip card reader control unit -J676- , media player in position 1 -R118- , media player in position 2 -R119- , digital sound package control unit -J525- and data bus diagnostic interface -J533- are connected by a “ring” bus system. This “ring” is the fibre optic MOST Bus.

The connection to the other bus systems in the vehicle is provided by the data bus diagnostic interface -J533- .

The “central control unit” is the control unit for front display and information control panel -J523- . The signals required to display information on the instrument cluster display are transmitted via the MOST Bus to the data bus diagnostic interface -J533- and from there via the CAN Bus (instrument cluster) to the instrument cluster.

Fault finding is performed via the “Guided Fault Finding” using ⇒ Vehicle diagnosis, testing and information system VAS 5051.

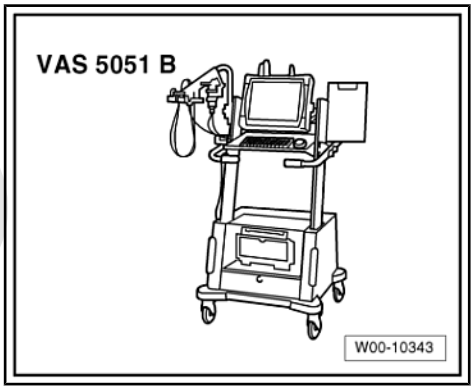

For more information, refer to ⇒ Self-study programme No. 286 ; "New data bus systems - LIN, MOST, Bluetooth" , ⇒ Self-study programme No. 293 ; "Audi A8 Infotainment" .

Notes on fibre optic MOST Bus

In addition to the CAN Bus systems, a fibre optic data bus system is also used.

Data is transmitted between the systems radio -R- , digital sound package control unit -J525- , TV tuner -R78- , media player in position 1 -R118- , media player in position 2 -R119- , telephone transmitter and receiver unit -R36- , navigation system with CD drive control unit -J401- , chip card reader control unit -J676- and data bus diagnostic interface -J533- via the MOST Bus .

A “fibre optic cable” is used as the connecting cable.

Protected by copyright. Copying for private or commercial purposes, in part or in whole, is not permitted unless authorised by AUDI AG. AUDI AG does not guarantee or accept any liability with respect to the correctness of information in this document. Copyright by AUDI AG.

The fibre optic cables are fitted in corrugated tubes for protection.

It is important to ensure that the end faces of the connectors do not become dirty.

If connectors are unplugged: fit a protective cap for cable connector -VAS 6223/9- .

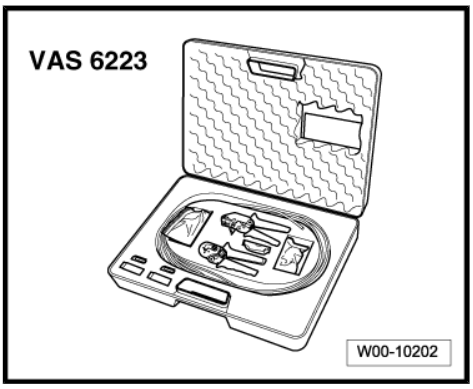

The fibre optic cables cannot be repaired; the entire cable has to be renewed in each case.

When installing fibre optic cables, be sure to observe the minimum bending radius of 25 mm. Do not crush or kink the cables.

Fibre optic cables ⇒ Electrical system; Rep. Gr. 97

For more information, refer to ⇒ Self-study programme No. 286 ; "New data bus systems - LIN, MOST, Bluetooth" .

1.2 General notes on the MMI system (from week 36/08 onwards)

The MMI fitted from week 36/08 onwards is an enhanced version of the MMI which has been used up to now. The functions for control unit, telephone, mobile phone pre-installation, AMI, CD and DVD drives, navigation system (with hard disk) and SDS are all integrated in the control unit 1 for information electronics -J794- as one unit.

The radio -R- , CD changer -R41- , TV tuner -R78- and the digital sound package control unit -J525- are externally linked to the system via the MOST Bus. The basic sound systems are directly activated by the radio -R- , and DAB is optionally integrated in the radio -R- .

MMI maximum equipment

- Control unit 1 for information electronics -J794- in glove box contains CD player / DVD player / navigation system / Bluetooth car phone / voice control system / SD memory card readers
- Internal hard drive (HD) to store navigation data and MP3 files
- Multimedia system operating unit -E380- in centre console (bottom)
- Display unit for front information display and operating unit control unit -J685- in dash panel (centre)
- CD changer -R41- / as an option connection for external audio sources -R199- (interface) in glove box
- Digital sound package control unit -J525- located in luggage compartment (rear left)
- Sound systems: Standard/BOSE/Bang and Olufsen
- Radio -R- in luggage compartment (rear left)
- TV tuner -R78- in luggage compartment (rear left)
- Mobile phone pre-installation (fitted optionally)
- Multi-function steering wheel (fitted optionally)

Protected by copyright. Copying for private or commercial purposes, in part or in whole, is not permitted unless authorised by AUDI AG. AUDI AG does not guarantee or accept any liability with respect to the correctness of information in this document. Copyright by AUDI AG.

The exchange of data in the MMI systems takes place via the MOST bus.

The connection to other bus systems in the vehicle is handled by the data bus diagnostic interface -J533- .

Fault finding is performed via the “Guided Fault Finding” ⇒ Vehicle diagnosis, testing and information system VAS 5051.

For more information, refer to ⇒ Self-study programme No. 286 ; "New data bus systems - LIN, MOST, Bluetooth" .

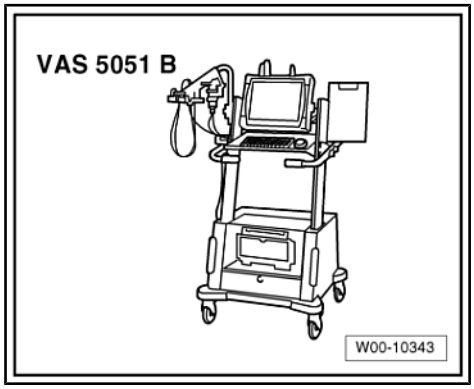

Layout of control unit 1 for information electronics -J794- (MMI)

The control unit 1 for information electronics -J794- is a third-generation MMI version. Depending on the equipment version, the control unit 1 for information electronics -J794- contains the following control units known from the second generation:

1 - Control unit for front display and information control panel -J523-

2 - CD player -R89-

3 - Navigation system with CD drive control unit -J401-

4 - Chip card reader for telephone -R115- / SD card reader

5 - Speech input control unit -J507-

6 - Telephone transmitter and receiver unit -R36- (Bluetooth car phone)

7 - Telephone transmitter and receiver unit -R36- (phone preinstallation)

8 - Internal hard drive (HD)

9 - Control unit 1 for information electronics -J794-

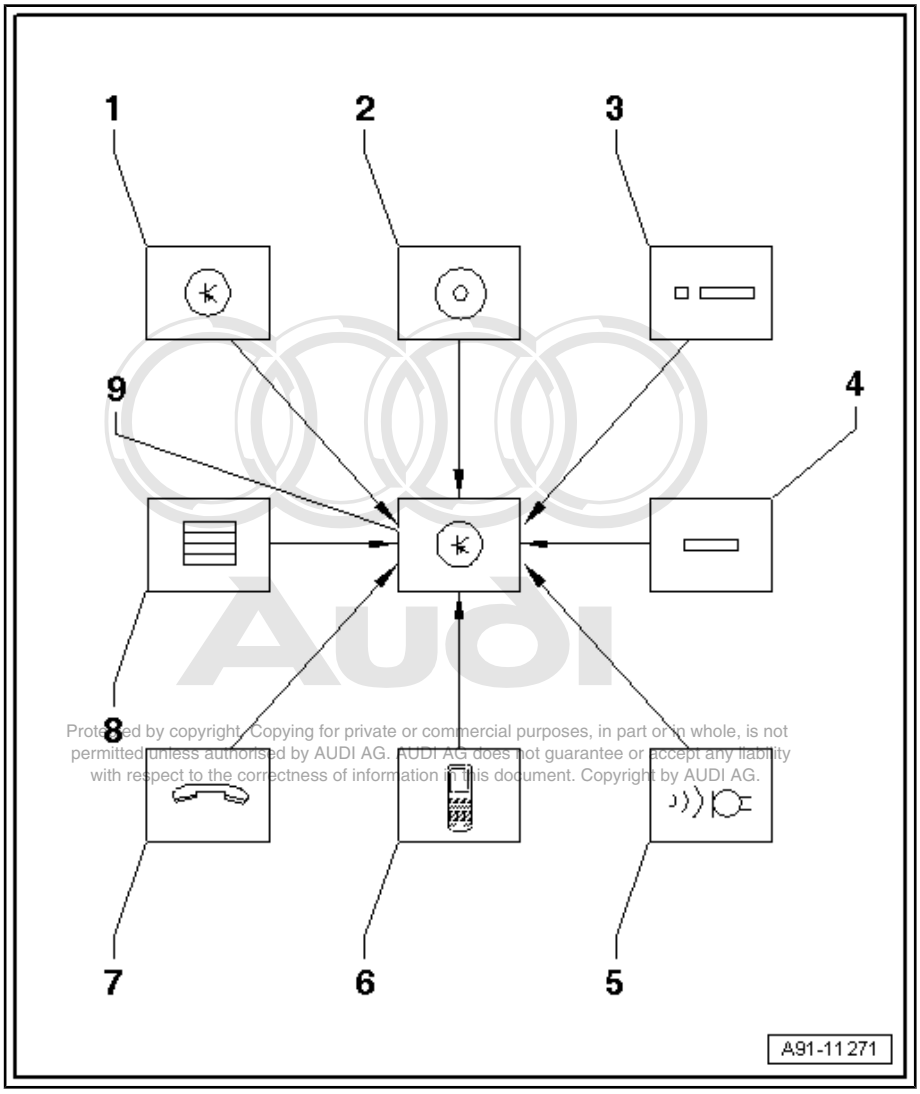

Protected by copyright. Copying for private or commercial purposes, in part or in whole, is not permitted unless authorised by AUDI AG. AUDI AG does not guarantee or accept any liability with respect to the correctness of information in this document. Copyright by AUDI AG.

Layout of radio -R- (MMI)

Depending on the equipment version, the radio -R- contains the following control units known from the second generation:

1 - Digital sound package control unit -J525-

2 - Radio -R-

3 - Radio -R- AM/FM tuner

4 - Satellite radio -R146- (USA only) not fitted

5 - Digital radio -R147-

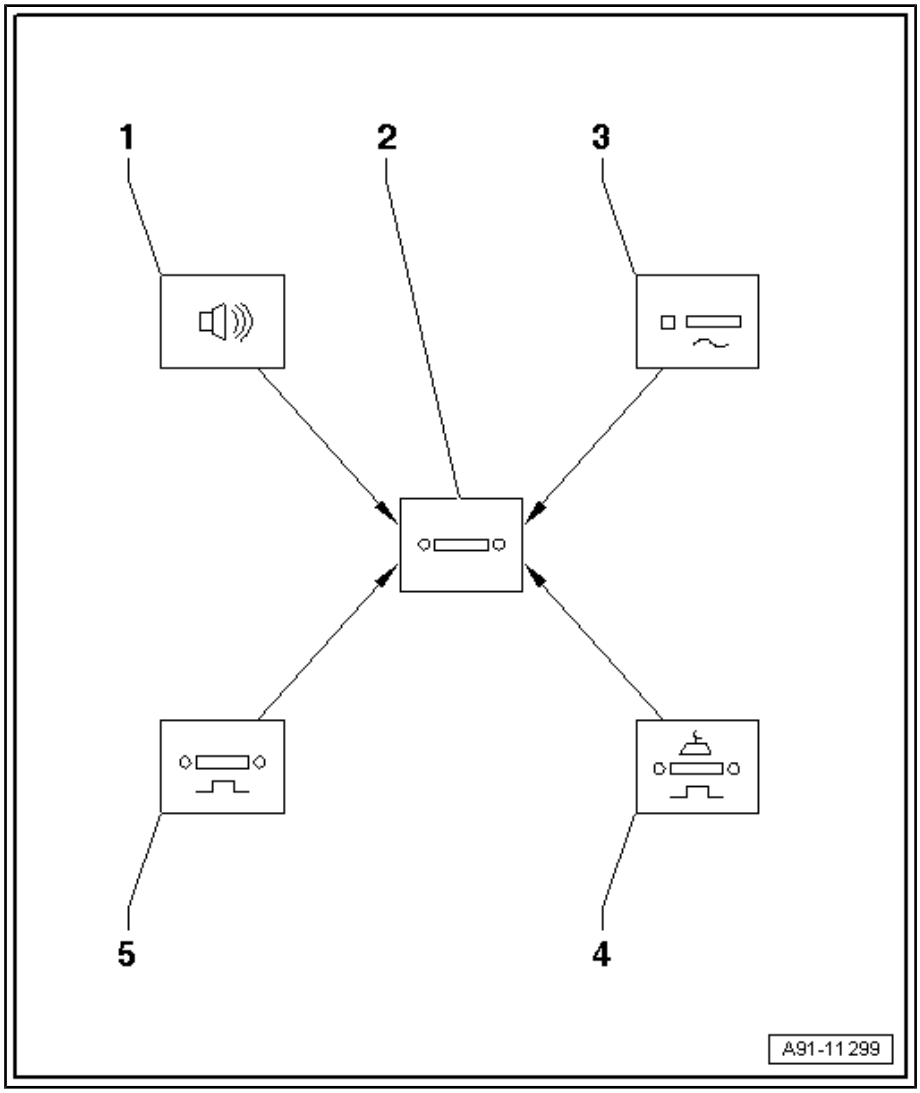

Layout of MOST bus (MMI)

Protected by copyright. Copying for private or commercial purposes, in part or in whole, is not permitted unless authorised by AUDI AG. AUDI AG does not guarantee or accept any liability with respect to the correctness of information in this document. Copyright by AUDI AG.

1 - Display unit for front information display and operating unit control unit -J685-

2 - Control unit 1 for information electronics -J794-

3 - MOST bus

4 - CD changer -R41-

5 - TV tuner -R78-

6 - Radio -R-

7 - Digital sound package control unit -J525-

8 - Data bus diagnostic interface -J533-

9 - Multimedia system operating unit -E380-

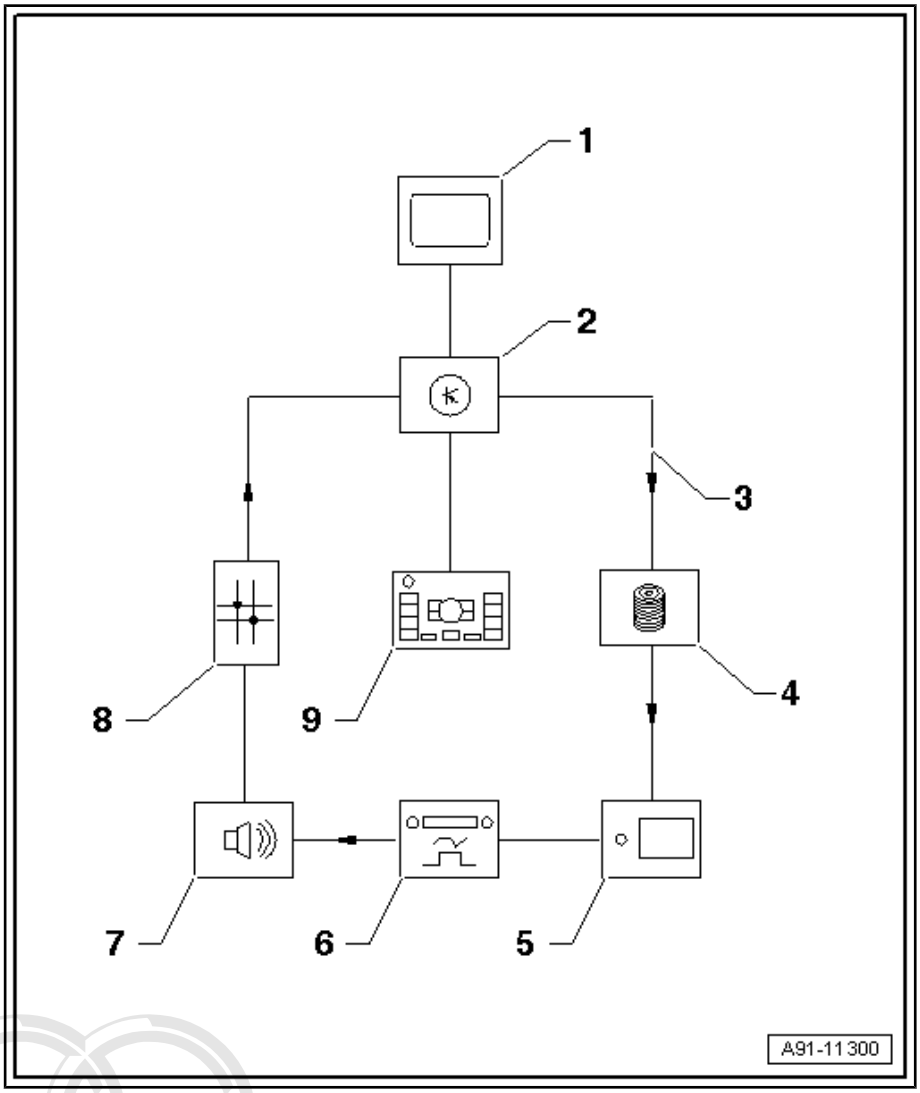

Notes on MOST Bus

In addition to the CAN Bus systems, the fibre optic “MOST Bus” system is used.

A “fibre optic cable” is used as the connecting cable. The fibre optic cables are fitted in corrugated tubes for protection.

Renew the complete fibre optic cable whenever possible.

It is important to ensure that the end faces of the connectors do not become dirty.

Protected by copyright. Copying for private or commercial purposes, in part or in whole, is not permitted unless authorised by AUDI AG. AUDI AG does not guarantee or accept any liability with respect to the correctness of information in this document. Copyright by AUDI AG.

If connectors are unplugged: fit a protective cap for cable connector -VAS 6223/9- .

When installing fibre optic cables, be sure to observe the minimum bending radius of 25 mm. Do not crush or kink the cables.

Repairing fibre optic cables ⇒ Electrical system; Rep. Gr. 97 .

For more information, refer to ⇒ Self-study programme No. 286 ; "New data bus systems - LIN, MOST, Bluetooth" .

1.3 MMI (up to week 35/08) - layout

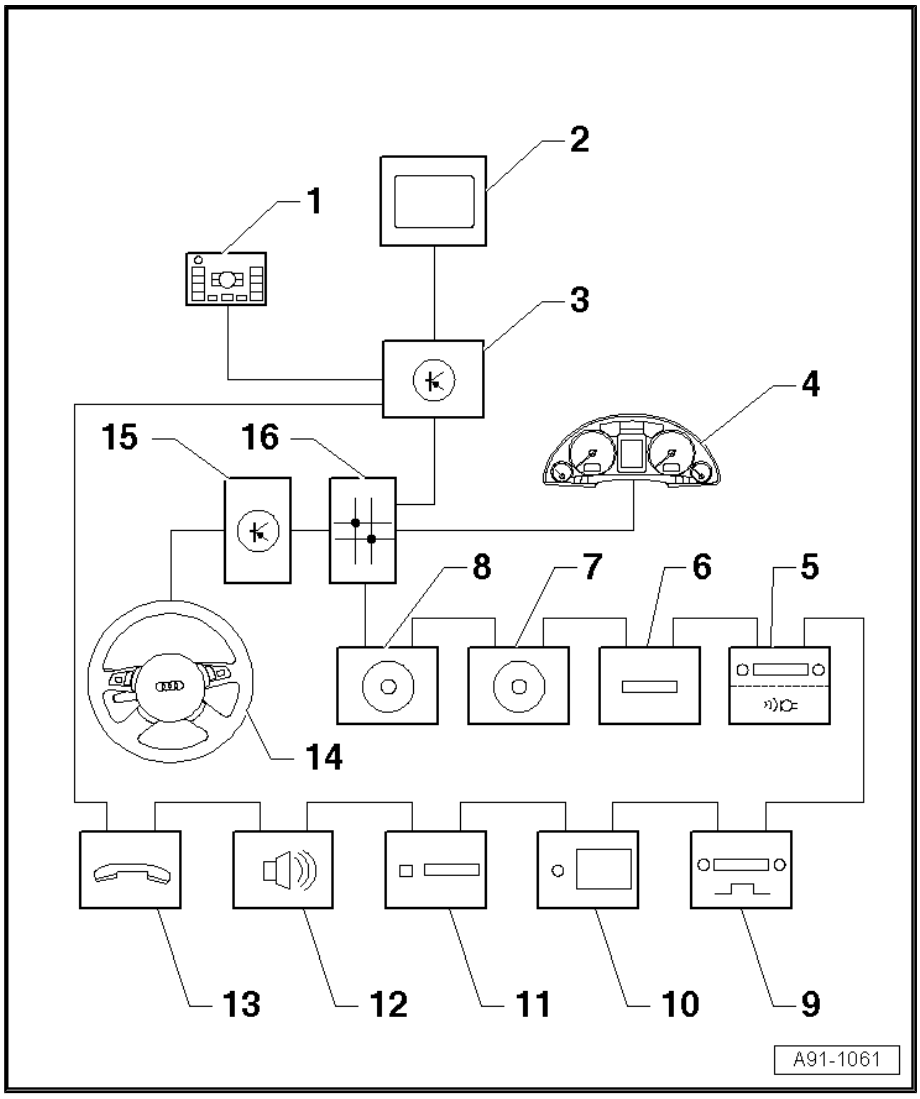

1 - Multimedia system operating unit -E380-

- ❑ In centre console (bottom)
- ❑ Pin assignment ⇒ page 14
- ❑ Removing and installing ⇒ page 26

2 - Display unit for front information display and operating unit control unit -J685-

- ❑ Display
- ❑ In dash panel (centre)
- ❑ Removing and installing ⇒ page 23

3 - Control unit for front display and information control panel -J523-

- ❑ Behind glove box
- ❑ Pin assignment (up to model year 2007) ⇒ page 9
- ❑ Pin assignment (from model year 2008 onwards) ⇒ page 10
- ❑ Removing and installing ⇒ page 19

4 - Control unit in dash panel insert -J285-

- ❑ Instrument cluster
- ❑ In dash panel
- ❑ Pin assignment ⇒ Electrical system; Rep. Gr. 90
- ❑ Removing and installing ⇒ Electrical system; Rep. Gr. 90

5 - Radio -R-

- ❑ Behind luggage compartment side trim (left-side)
- ❑ With optional speech input control unit -J507-
- ❑ Pin assignment, radio -R- (up to week 35/08) ⇒ page 70
- ❑ Removing and installing radio -R- (up to model year 2005) ⇒ page 109
- ❑ Removing and installing radio -R- (from model year 2006 onwards) ⇒ page 110

6 - Chip card reader control unit -J676-

- ❑ In glove box

7 - Media player in position 1 -R118-

- ❑ In glove box

CD changer -R41-

- ❑ Pin assignment ⇒ page 80
- ❑ Removing and installing ⇒ page 116

MiniDisc player -R153-

- ❑ Pin assignment ⇒ page 81

Copyright by copyright. Copying for private or commercial purposes, in part or in whole, is not permitted unless authorised by AUDI AG. AUDI AG does not guarantee or accept any liability with respect to the correctness of information in this document. Copyright by AUDI AG.

- ❑ Removing and installing ⇒ page 61

Connection for external audio sources -R199- (AMI)

- ❑ Pin assignment ⇒ page 82
- ❑ Removing and installing ⇒ page 117

8 - Media player in position 2 -R119-

- ❑ In glove box

CD changer -R41-

- ❑ Pin assignment ⇒ page 80
- ❑ Removing and installing ⇒ page 116

CD player -R89-

- ❑ Pin assignment ⇒ page 80
- ❑ Removing and installing ⇒ page 116

DVD player -R7-

- ❑ Pin assignment ⇒ page 227
- ❑ Removing and installing ⇒ page 238

9 - Digital radio -R147-

- ❑ Behind luggage compartment side trim (left-side)
- ❑ Pin assignment (up to week 35/08) ⇒ page 83
- ❑ Removing and installing ⇒ page 114

Protected by copyright. Copying for private or commercial purposes, in part or in whole, is not permitted unless authorised by AUDI AG. AUDI AG does not guarantee or accept any liability with respect to the correctness of information in this document. Copyright by AUDI AG.

10 - TV tuner -R78-

- ❑ Behind luggage compartment side trim (left-side)
- ❑ Pin assignment (analogue) ⇒ page 221
- ❑ Pin assignment (up to week 35/08) ⇒ page 224
- ❑ Removing and installing ⇒ page 229

11 - Navigation system with CD drive control unit -J401-

- ❑ Behind luggage compartment side trim (left-side)
- ❑ Pin assignment (up to week 35/08) ⇒ page 197
- ❑ Removing and installing ⇒ page 201

12 - Digital sound package control unit -J525-

- ❑ Behind luggage compartment side trim (left-side)
- ❑ Pin assignment (Standard) ⇒ page 73
- ❑ Removing and installing (Standard) (up to model year 2005) ⇒ page 99
- ❑ Removing and installing (Standard) (from model year 2006 onwards, up to week 35/08) ⇒ page 101
- ❑ Pin assignment (BOSE) ⇒ page 74
- ❑ Removing and installing (BOSE) (up to model year 2005) ⇒ page 102
- ❑ Removing and installing (BOSE) (from model year 2006 onwards) ⇒ page 104
- ❑ Pin assignment (BOSE 6000) ⇒ page 75
- ❑ Removing and installing (BOSE 6000) ⇒ page 105
- ❑ Pin assignment (Bang & Olufsen) ⇒ page 77
- ❑ Removing and installing (Bang & Olufsen) ⇒ page 106

13 - Telephone transmitter and receiver unit -R36-

- ❑ In front of front left seat beneath floor covering
- ❑ Pin assignment ⇒ page 148
- ❑ Removing and installing ⇒ page 166

14 - Multi-function steering wheel

- ❑ Removing and installing buttons ⇒ page 255

15 - Steering column electronics control unit -J527-

- On steering column at steering column switch
- Pin assignment ⇒ Electrical system; Rep. Gr. 94
- Removing and installing ⇒ Electrical system; Rep. Gr. 94

16 - Data bus diagnostic interface -J533-

- Behind glove box
- Pin assignment ⇒ page 15
- Removing and installing ⇒ page 22

1.4 MMI (from week 36/08 onwards) - layout

1 - Multimedia system operating unit -E380- in centre console (bottom)

2 - Roof aerial -R216- (GPS aerial -R50-)

3 - Display unit for front information display and operating unit control unit -J685- in dash panel (centre)

4 - Roof aerial -R216- (telephone aerial -R65-)

5 - Microphone unit in front roof module -R164- (front left microphone -R140-) in front interior light -W1-

6 - Telephone bracket -R126- in centre console storage compartment

7 - Control unit 1 for information electronics -J794- in glove box (left-side)

8 - MOST bus

9 - FBAS wire

10 - CD changer -R41- in glove box (right-side)

11 - TV tuner -R78- behind luggage compartment side trim (left-side)

12 - Connection for external audio sources -R199- (interface) in glove box

13 - Radio -R- located behind luggage compartment side trim (left-side)

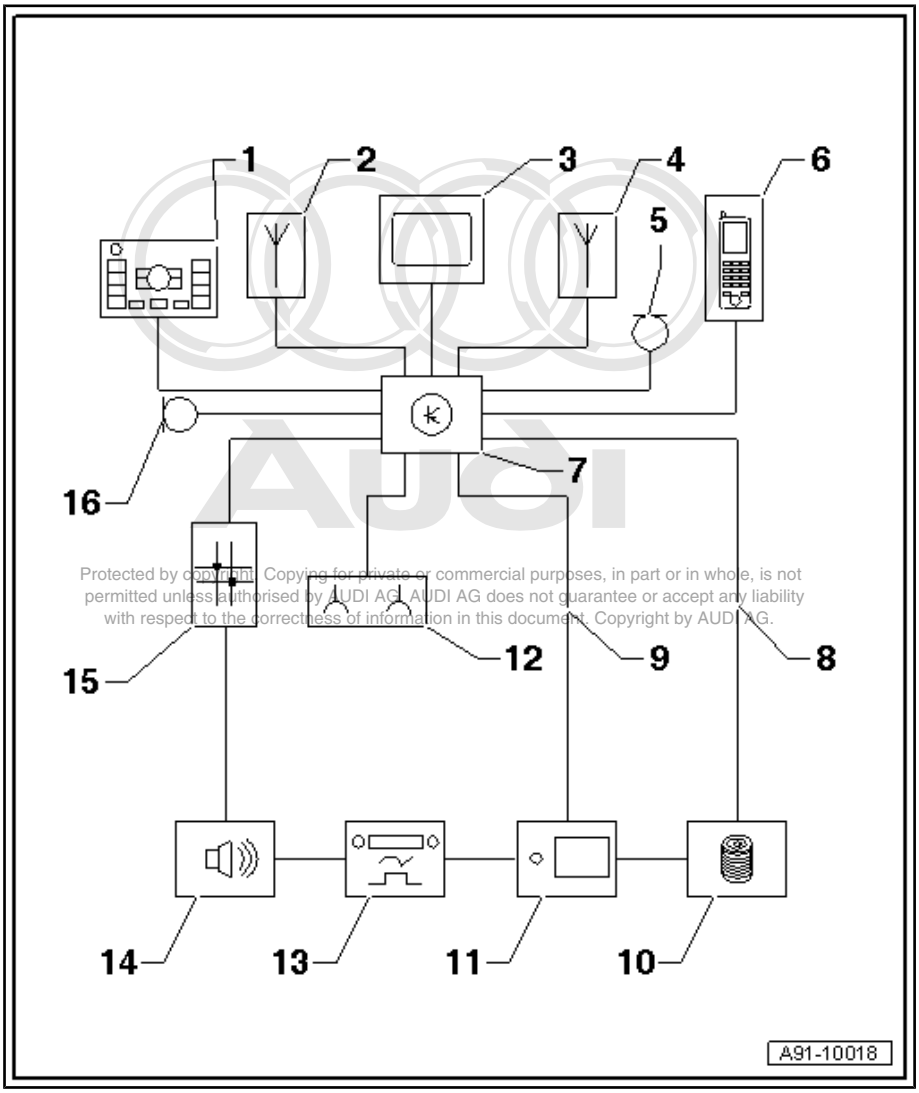

Protected by copyright. Copying for private or commercial purposes, in part or in whole, is not permitted unless authorised by AUDI AG. AUDI AG does not guarantee or accept any liability with respect to the correctness of information in this document. Copyright by AUDI AG.

14 - Digital sound package control unit -J525- behind luggage compartment side trim (left-side)

15 - Data bus diagnostic interface -J533- behind glove box

16 - Microphone unit in front roof module -R164- (front right microphone -R141-) in front interior light -W1-

1.5 Connectors for MMI (up to model year 2007)

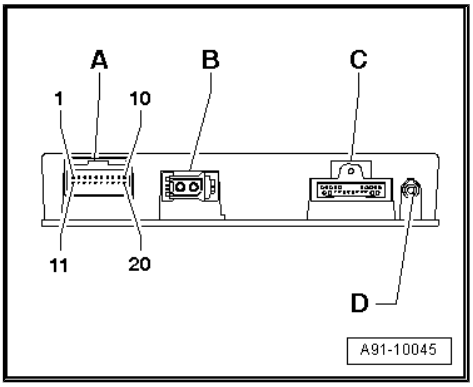

Control unit for front display and information control panel -J523-

A - Multi-pin connector, 20-pin, black

B - MOST bus

C - Multi-pin connector, 22-pin (black) to display unit for front information display and operating unit control unit -J685-

- Multi-pin connector, 22-pin (black) to display and operating unit changeover unit -J728- (Japan nav)

D - FBAS input (green) from DVD player -R7- / TV tuner -R78- / reversing camera system control unit -J772-

Note

Protected by copyright. Copying for private or commercial purposes, in part or in whole, is not permitted unless authorised by AUDI AG. AUDI AG does not guarantee or accept any liability with respect to the correctness of information in this document. Copyright by AUDI AG.

Contacts which are not listed are not used.

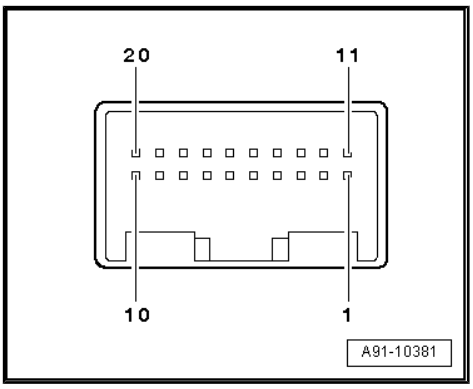

A - Multi-pin connector, 20-pin, black

1 - Terminal 30

2 - Terminal 31

3 - Open circuit diagnostic lead

6 - Wake-up to multimedia system operating unit -E380-

7 - Voltage supply to multimedia system operating unit -E380-

8 - Earth to multimedia system operating unit -E380-

11 - CAN Bus High (Infotainment)

12 - CAN Bus Low (Infotainment)

13 - RESET from multimedia system operating unit -E380-

14 - RESET to multimedia system operating unit -E380-

15 - Data to multimedia system operating unit -E380-

16 - Data from multimedia system operating unit -E380-

20 - NF mute (low frequency) from pre-fitted components for mobile phone installation/US telematics/Japan nav

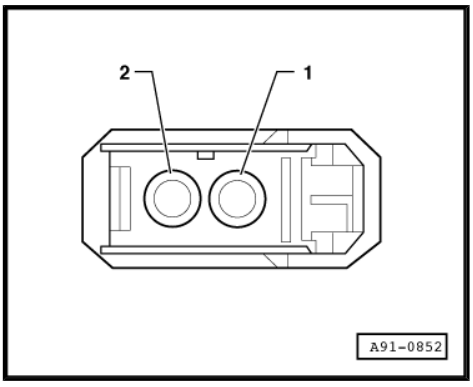

B - MOST bus

1 - Input

2 - Output

1.6 Connectors for MMI (from model year 2008 onwards, up to week 35/08)

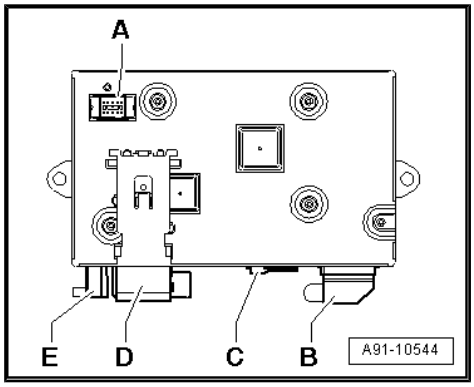

Control unit for front display and information control panel -J523-

A - Multi-pin connector, 10-pin (black) LVDS wire (Japan nav)

B - Multi-pin connector, 20-pin, red

C - MOST bus

D - Multi-pin connector, 22-pin (black) to display unit for front information display and operating unit control unit -J685-

E - FBAS input (green) from TV tuner -R78- / reversing camera system control unit -J772-

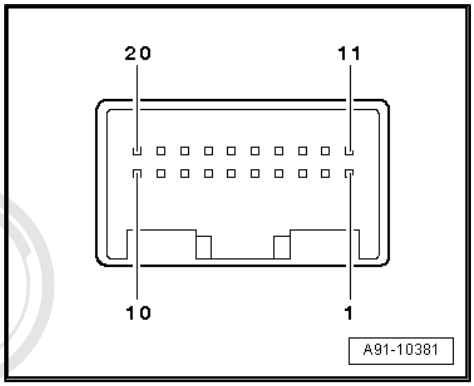

B - Multi-pin connector, 20-pin, red

1 - Terminal 30

2 - Terminal 31

3 - Open circuit diagnostic lead

6 - Wake-up to multimedia system operating unit -E380-

7 - Voltage supply to multimedia system operating unit -E380-

8 - Earth to multimedia system operating unit -E380-

11 - CAN Bus High (Infotainment)

12 - CAN Bus Low (Infotainment)

13 - RESET from multimedia system operating unit -E380-

14 - RESET to multimedia system operating unit -E380-

15 - Data to multimedia system operating unit -E380-

16 - Data from multimedia system operating unit -E380-

20 - NF mute (low frequency) from pre-fitted components for mobile phone installation/Japan nav/China nav

Protected by copyright. Copying for private or commercial purposes, in part or in whole, is not permitted unless authorised by AUDI AG. AUDI AG does not guarantee or accept any liability with respect to the correctness of information in this document. Copyright by AUDI AG.

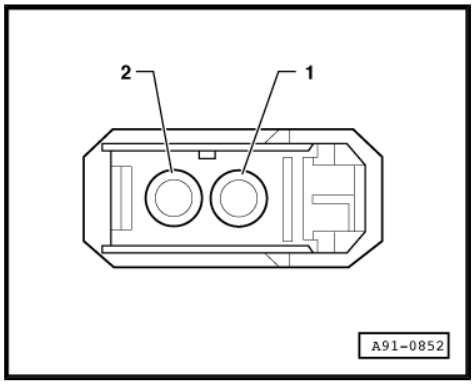

C - MOST bus

1 - Input

2 - Output

1.7 Connectors for MMI (from week 36/08 onwards)

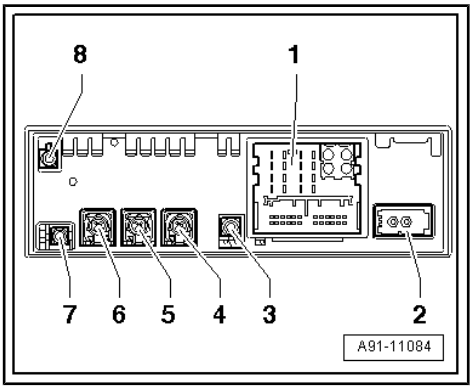

Control unit 1 for information electronics -J794-

1 - Connection block with four multi-pin connectors

2 - MOST bus

3 - FBAS input (green) from TV tuner -R78-

4 - Multi-pin connector, 4-pin, grey (T4bd) to display unit for front information display and operating unit control unit -J685-

5 - Multi-pin connector, 4-pin, yellow (T4bc) to connection for external audio sources -R199-

6 - Not used

7 - GPS connection from roof aerial -R216-

8 - GSM connection from roof aerial -R216-

Note

Contacts which are not listed are not used.

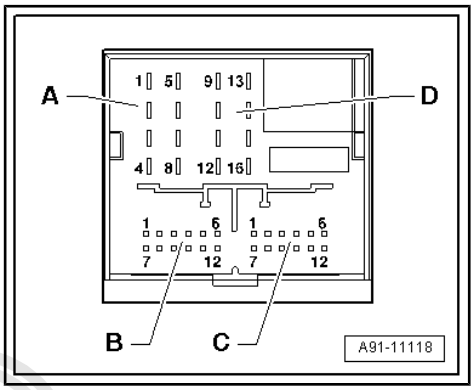

A - Multi-pin connector, 8-pin, brown (T8z)

1 - NF mute (low frequency) from pre-fitted components for mobile phone installation

2 - Voltage supply to multimedia system operating unit -E380-

3 - Wake-up to multimedia system operating unit -E380-

4 - Not used

5 - Mobile phone “ON” signal to aerial amplifier for mobile telephone -R86-

6 - Res MU to multimedia system operating unit -E380-

7 - Open circuit diagnostic lead

Protected by copyright. Copying for private or commercial purposes, in part or in whole, is not permitted unless authorised by AUDI AG. AUDI AG does not guarantee or accept any liability with respect to the correctness of information in this document. Copyright by AUDI AG.

B - Multi-pin connector, 12-pin, blue (T12y)

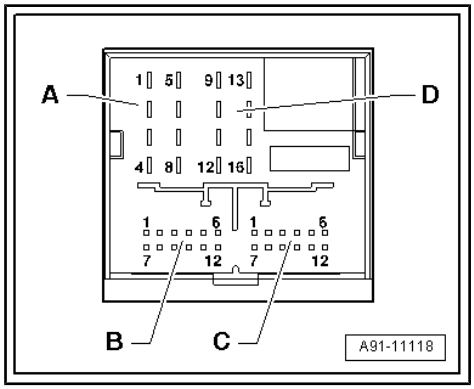

Left-hand drive vehicle

2 - Microphone input (+) from microphone unit in front roof module -R164- (front right microphone -R141-)

3 - Microphone input (–) from microphone unit in front roof module -R164- (front right microphone -R141-)

5 - FBAS wire (–) from reversing camera system control unit -J772-

8 - Microphone input (+) from microphone unit in front roof module -R164- (front left microphone -R140-)

9 - Microphone input (–) from microphone unit in front roof module -R164- (front left microphone -R140-)

11 - FBAS wire (+) from reversing camera system control unit -J772-

Right-hand drive vehicle

2 - Microphone input (+) from microphone unit in front roof module -R164- (front left microphone -R140-)

3 - Microphone input (–) from microphone unit in front roof module -R164- (front left microphone -R140-)

5 - FBAS wire (–) from reversing camera system control unit -J772-

8 - Microphone input (+) from microphone unit in front roof module -R164- (front right microphone -R141-)

9 - Microphone input (–) from microphone unit in front roof module -R164- (front right microphone -R141-)

11 - FBAS wire (+) from reversing camera system control unit -J772-

C - Multi-pin connector, 12-pin, green (T12z)

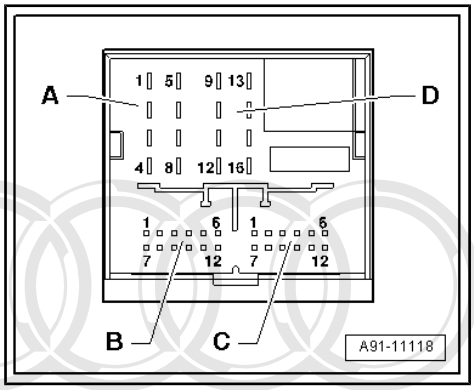

All pins are connected to the connection for external audio sources -R199- .

1 - NF in, earth (low frequency)

2 - NF in, right-side (low frequency)

3 - USB (+5V)

4 - USB (earth)

5 - Not used

6 - Detect

7 - NF in, left-side (low frequency)

8 - NF in, screen earth (low frequency)

9 - FBAS wire (+)

10 - FBAS wire (–)

11 - iPod data

12 - iPod data

Protected by copyright. Copying for private or commercial purposes, in part or in whole, is not permitted unless authorised by AUDI AG. AUDI AG does not guarantee or accept any liability with respect to the correctness of information in this document. Copyright by AUDI AG.

D - Multi-pin connector, 8-pin, black (T8)

9 - “Telephone ON” signal to telephone bracket -R126-

10 - Data from multimedia system operating unit -E380-

11 - Data to multimedia system operating unit -E380-

12 - Terminal 31

13 - SNDREQ signal from telephone bracket -R126- (mobile telephone)

14 - Res BT from multimedia system operating unit -E380-

15 - Terminal 30

16 - Earth to multimedia system operating unit -E380-

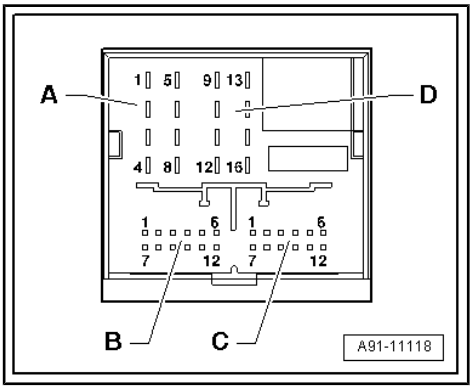

2 - MOST bus

1 - Input

2 - Output

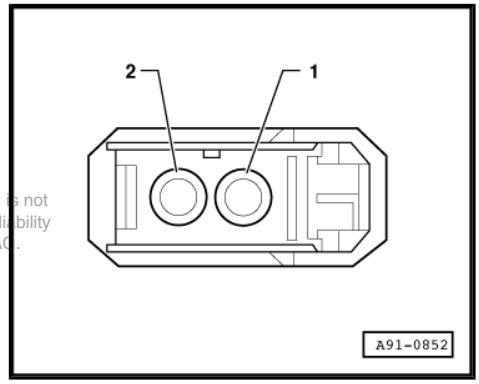

Protected by copyright. Copying for private or commercial purposes, in part or in whole, is not permitted unless authorised by AUDI AG. AUDI AG does not guarantee or accept any liability with respect to the correctness of information in this document. Copyright by AUDI AG.

4 - Multi-pin connector, 4-pin, grey (T4bd)

All pins are connected to the display unit for front information display and operating unit control unit -J685- .

1 - LVDS (–)

2 - LIN

3 - LVDS (+)

4 - Earth

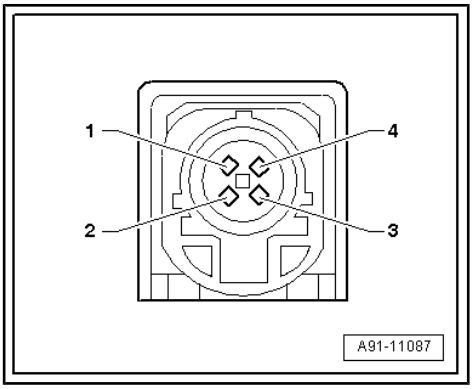

5 - Multi-pin connector, 4-pin, yellow (T4bc)

All pins are connected to the connection for external audio sources -R199- .

1 - D (+)

2 - iPod detected

3 - D (–)

4 - Earth

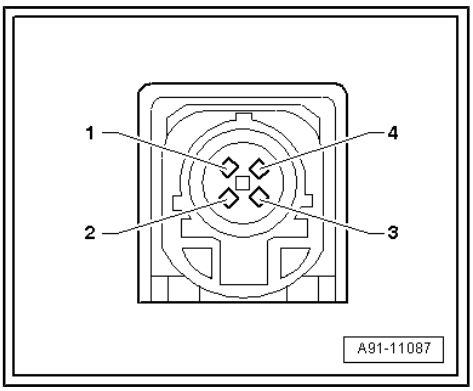

1.8 Connectors on multimedia system operating unit -E380-

Note

Contacts which are not listed are not used.

Multi-pin connector, 16-pin, black/brown (T16n)

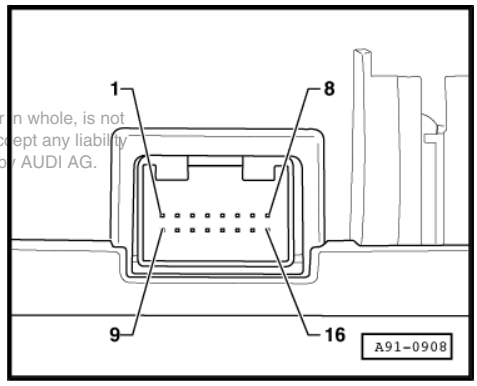

6 - Wake-up from control unit for front display and information control panel -J523- / control unit 1 for information electronics -J794-

Protected by copyright. Copying for private or commercial purposes, in part or in whole, is not permitted unless authorised by AUDI AG. AUDI AG does not guarantee or accept any liability with respect to the correctness of information. Copyright by AUDI AG.

7 - Voltage supply from control unit for front display and information control panel -J523- / control unit 1 for information electronics -J794-

8 - Earth from control unit for front display and information control panel -J523- / control unit 1 for information electronics -J794-

9 - Signal for display open/closed to onboard supply control unit 2 -J520-

10 - Signal from open/close button for front display -E462-

13 - RESET to control unit for front display and information control panel -J523- / control unit 1 for information electronics -J794-

14 - RESET from control unit for front display and information control panel -J523- / control unit 1 for information electronics -J794-

15 - Data from control unit for front display and information control panel -J523- / control unit 1 for information electronics -J794-

16 - Data to control unit for front display and information control panel -J523- / control unit 1 for information electronics -J794-

1.9 Connectors for display (from week 36/08 onwards)

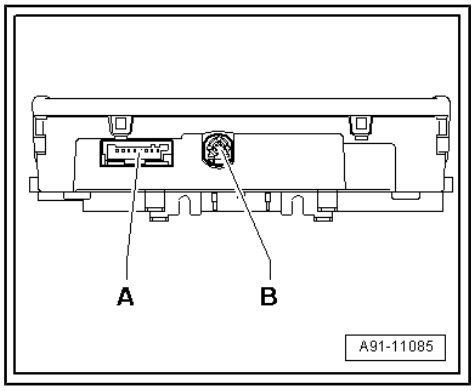

Display unit for front information display and operating unit control unit -J685-

A - Multi-pin connector, 8-pin, black (T8am)

B - Multi-pin connector, 4-pin, black (T4be) from control unit 1 for information electronics -J794-

Note

Contacts which are not listed are not used.

A - Multi-pin connector, 8-pin, black (T8am)

4 - Terminal 30

5 - Terminal 31

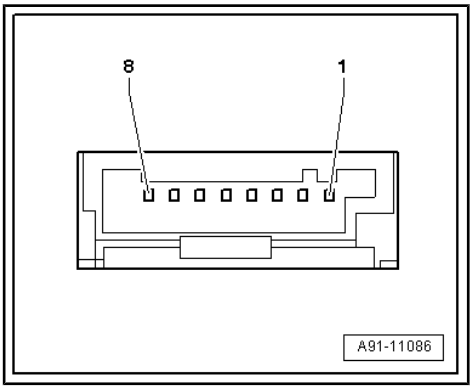

B - Multi-pin connector, 4-pin, black (T4be)

All pins are connected to the control unit 1 for information electronics -J794- .

1 - LVDS (–)

2 - LIN

3 - LVDS (+)

4 - Earth

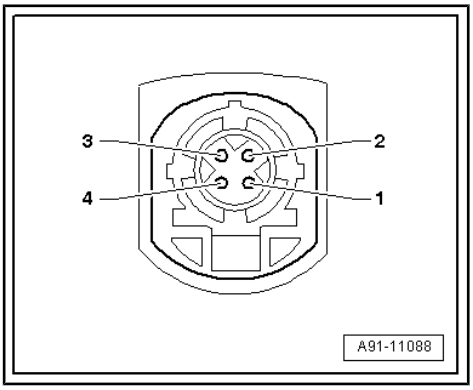

1.10 Connectors on data bus diagnostic interface -J533-

Data bus diagnostic interface -J533-

1 - MOST bus

2 - Multi-pin connector, 26-pin, black (T26)

Note

Contacts which are not listed are not used.

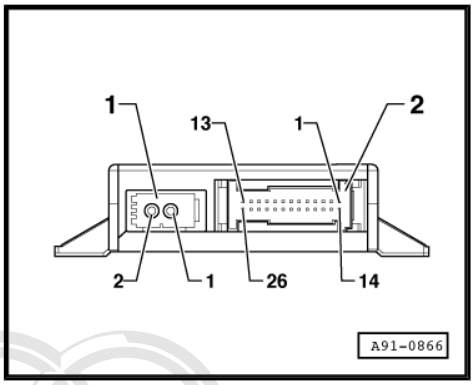

1 - MOST bus

1 - Input

2 - Output

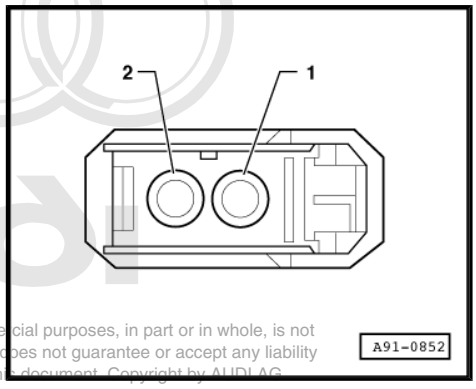

Protected by copyright. Copying for private or commercial purposes, in part or in whole, is not permitted unless authorised by AUDI AG. AUDI AG does not guarantee or accept any liability with respect to the correctness of information in this document. Copyright by AUDI AG.

2 - Multi-pin connector, 26-pin, black (T26)

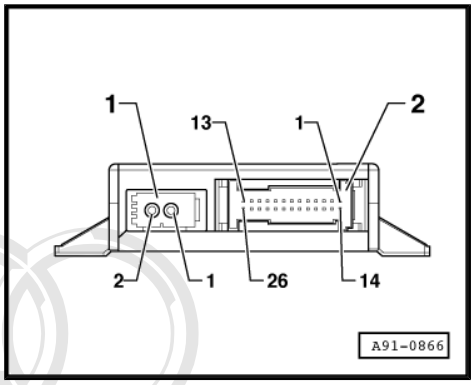

1 - Terminal 30

2 - Terminal 30

3 - Instrument cluster wake-up

4 - Open circuit diagnostic lead

6 - CAN Bus High (convenience)

8 - CAN Bus High (drive train)

9 - CAN Bus High (instrument cluster)

11 - CAN Bus High (diagnosis)

13 - E-CAN High

14 - Terminal 31

15 - Terminal 31

16 - Terminal 15

19 - CAN Bus Low (convenience)

21 - CAN Bus Low (drive train)

22 - CAN Bus Low (instrument cluster display)

24 - CAN Bus Low (diagnosis)

26 - E-CAN Low

Protected by copyright. Copying for private or commercial purposes, in part or in whole, is not permitted unless authorised by AUDI AG. AUDI AG does not guarantee or accept any liability with respect to the correctness of information in this document. Copyright by AUDI AG.

1.11 Microphone unit in front roof module -R164- - overview

The microphone unit in front roof module -R164- in front interior light -W1- consists of up to three microphones.

From week 22/04 onwards only two microphones are fitted.

One microphone (telephone microphone -R38-) is connected directly to the telephone transmitter and receiver unit -R36- . The other microphones are connected to the digital sound package control unit -J525- .

Microphone unit in front roof module -R164-

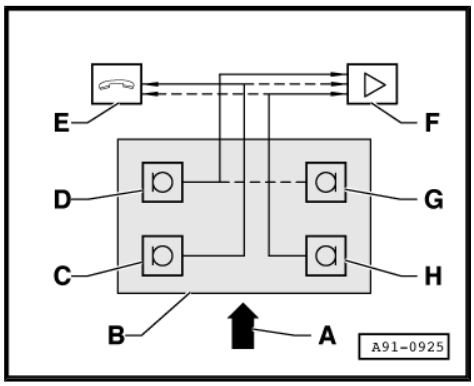

A - Direction of travel

B - Front interior light -W1-

C - Microphone 1 (black/grey) to digital sound package control unit -J525- / telephone transmitter and receiver unit -R36-

D - Microphone 2 (white) to digital sound package control unit -J525- (only on LHD vehicles) up to week 21/04

E - Telephone transmitter and receiver unit -R36-

F - Digital sound package control unit -J525-

G - Microphone 4 (red) to digital sound package control unit -J525- (only on RHD vehicles) up to week 21/04

H - Microphone 3 (blue/green) to digital sound package control unit -J525- / telephone transmitter and receiver unit -R36-

Removing and installing microphone unit in front roof module -R164- ⇒ page 168 .

1.11.1 Installation tables (up to week 21/04)

Standard

Microphone	Telephone and SDS	SDS	Telephone	Without telephone and SDS
1 (3)	X	X	X	
2 (4)	X	X		
3 (1)	X			

Figures in brackets (...) apply to RHD vehicles

BOSE

Microphone	Telephone and SDS	SDS	Telephone	Without telephone and SDS
1 (3)	X	X	X	X
2 (4)	X	X	X	
3 (1)	X			

Figures in brackets (...) apply to RHD vehicles

1.11.2 Installation tables (from week 22/04 onwards)

Standard

Microphone	Telephone and SDS	SDS	Telephone	Without telephone and SDS
1 (3)	X	X	X	
3 (1)	X			

Figures in brackets (...) apply to RHD vehicles

Protected by copyright. Copying for private or commercial purposes, in part or in whole, is not permitted unless authorised by AUDI AG. AUDI AG does not guarantee or accept any liability with respect to the correctness of information in this document. Copyright by AUDI AG.

BOSE

Microphone	Telephone and SDS	SDS	Telephone	Without telephone and SDS
1 (3)	X	X	X	X
3 (1)	X			

Figures in brackets (...) apply to RHD vehicles

1.11.3 Microphone unit in front roof module - R164- (from week 36/08 onwards)

The microphone unit in front roof module -R164- is fitted in the front interior light -W1- . There are up to three microphones installed (depending on equipment).

One of the microphones (internal microphone -R74-) is connected directly to the digital sound package control unit -J525- . The other microphones are connected to the control unit 1 for information electronics -J794- .

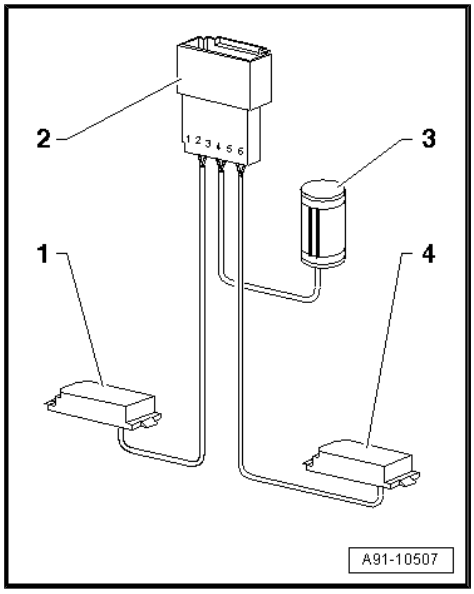

Microphone unit in front roof module -R164-

Left-hand drive vehicles:

1 - Front left microphone -R140- (black)

2 - 6-pin connector, blue (T6o), pins 1-2: front left microphone -R140- (black), pins 3-4: internal microphone -R74- (black), pins 5-6: front right microphone -R141- (blue)

3 - Internal microphone -R74- (black)

4 - Front right microphone -R141- (blue)

Right-hand drive vehicles:

1 - Front right microphone -R141- (blue)

2 - 6-pin connector, blue (T6o), pins 1-2: front right microphone -R141- (blue), pins 3-4: internal microphone -R74- (black), pins 5-6: front left microphone -R140- (black)

3 - Internal microphone -R74- (black)

4 - Front left microphone -R140- (black)

Protected by copyright. Copying for private or commercial purposes, in part or in whole, is not permitted unless authorised by AUDI AG. AUDI AG does not guarantee or accept any liability with respect to the correctness of information in this document. Copyright by AUDI AG.

Removing and installing microphone unit in front roof module -R164- ⇒ page 168 .

1.12 MMI (from week 36/08 onwards) - overview of fitting locations

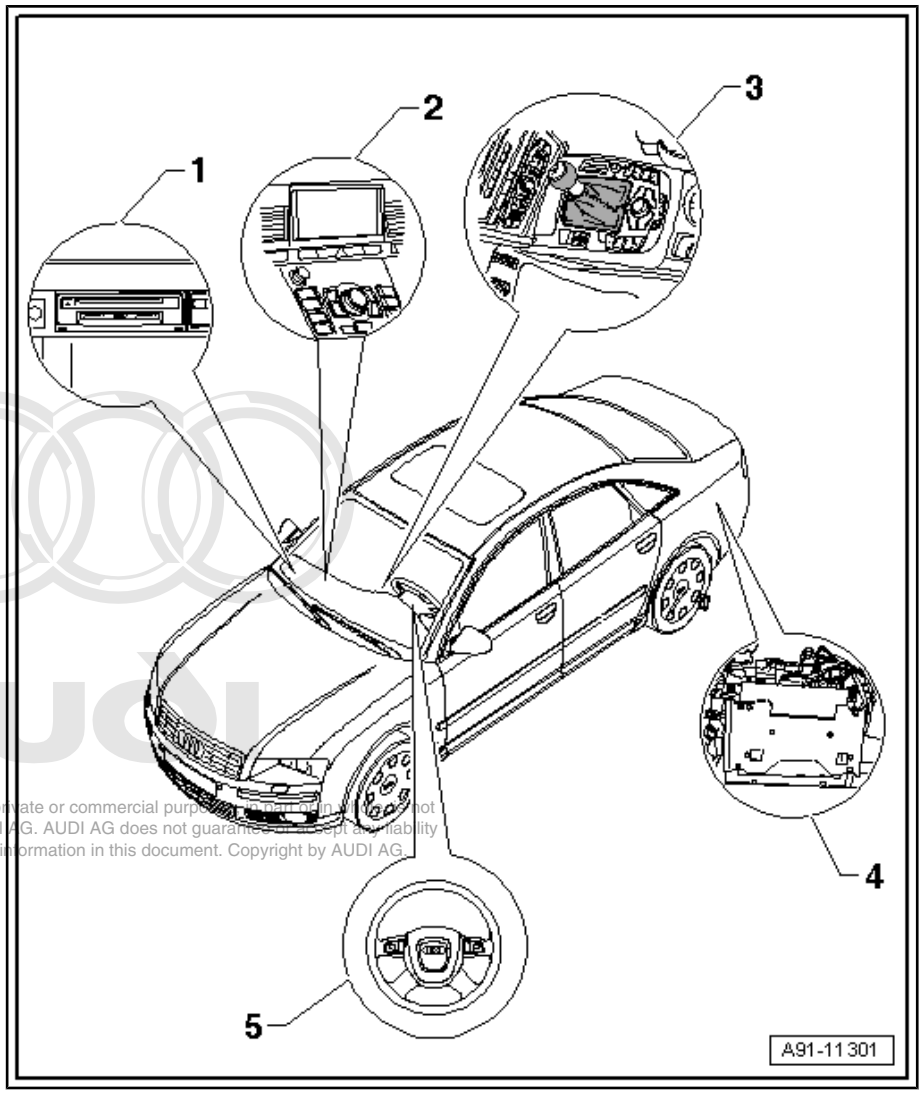

1 - Control unit 1 for information electronics -J794-

- In glove box (left-side)
- Pin assignment (from week 36/08 onwards) ⇒ page 11
- Removing and installing (from week 36/08 onwards) ⇒ page 21

2 - Display unit for front information display and operating unit control unit -J685-

- In dash panel (centre)
- Pin assignment (from week 36/08 onwards) ⇒ page 14
- Removing and installing ⇒ page 23

3 - Multimedia system operating unit -E380-

- In centre console (bottom)
- Pin assignment ⇒ page 14
- Removing and installing ⇒ page 26

4 - Radio -R-

- Behind luggage compartment side trim (left-side)
- Pin assignment (from week 36/08 onwards) ⇒ page 71
- Removing and installing (from week 36/08 onwards) ⇒ page 112

Protected by copyright. Copying for private or commercial purposes, in part or in whole, is not permitted unless authorised by AUDI AG. AUDI AG does not guarantee or accept any liability with respect to the correctness of information in this document. Copyright by AUDI AG.

- Digital sound package control unit -J525-

- Behind luggage compartment side trim (left-side)
- Pin assignment (BOSE 6000) ⇒ page 75
- Removing and installing (BOSE 6000) ⇒ page 105
- Pin assignment (Bang & Olufsen) ⇒ page 77
- Removing and installing (Bang & Olufsen) ⇒ page 106

5 - Multi-function steering wheel

- Removing and installing buttons ⇒ page 255

1.13 Removing and installing control unit for front display and information control panel -J523- (up to week 35/08)

The control unit for front display and information control panel -J523- is located behind the glove box.

Special tools and workshop equipment required

♦ Repair set for fibre optic cables -VAS 6223-

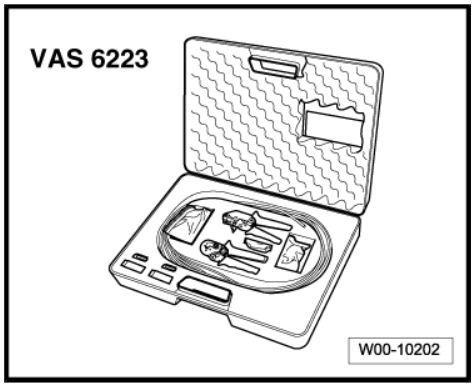

♦ Protective cap for cable connector -VAS 6223/9-

– When renewing control unit, select “Replacement” function for appropriate control unit in “Guided Fault Finding”.

To do so, use the vehicle diagnostic, testing and information system -VAS 5051- .

– Switch off all electrical equipment.

– Remove ignition key.

Removing

– Remove the glove box ⇒ General body repairs, interior; Rep. Gr. 68 .

– Unplug all connectors -2- on control unit for front display and information control panel -J523- -1-.

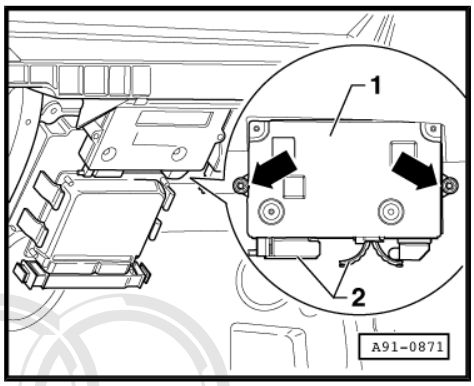

– Fit protective cap for cable connector -VAS 6223/9- -1- onto MOST bus connector -2-.

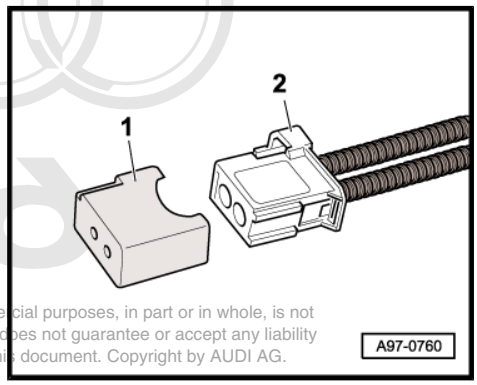

Protected by copyright. Copying for private or commercial purposes, in part or in whole, is not permitted unless authorised by AUDI AG. AUDI AG does not guarantee or accept any liability with respect to the correctness of information in this document. Copyright by AUDI AG.

– Unscrew bolts -arrows- (2.5 Nm) and remove control unit for front display and information control panel -J523- -1-.

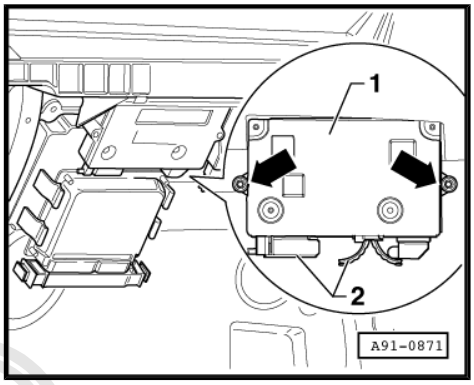

Installing

– Installation is performed in reverse sequence.

1.14 Removing and installing control unit 1 for information electronics -J794- (from week 36/08 onwards)

The control unit 1 for information electronics -J794- is located in the glove box (left-side).

Special tools and workshop equipment required

♦ Radio release tool -T10057-

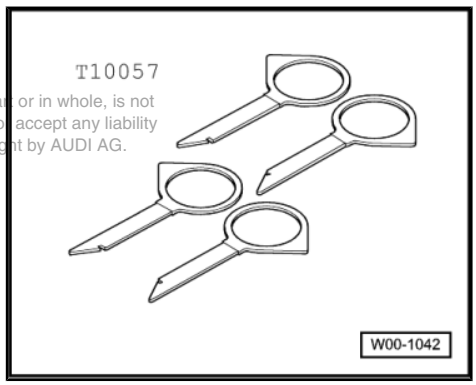

Protected by copyright. Copying for private or commercial purposes, in part or in whole, is not permitted unless authorised by AUDI AG. AUDI AG does not guarantee or accept any liability with respect to the correctness of information in this document. Copyright by AUDI AG.

♦ Repair set for fibre optic cables -VAS 6223-

♦ Protective cap for cable connector -VAS 6223/9-

– When renewing control unit, select “Replacement” function for appropriate control unit in “Guided Fault Finding”.

To do so, use the vehicle diagnostic, testing and information system -VAS 5051- .

– Switch off all electrical equipment.

– Remove ignition key.

Removing

– Open glove box.

– Insert two radio release tools -T10057- into slots in control unit 1 for information electronics -J794- until they engage. Pointed ends of grips must face outwards.
– Pull control unit 1 for information electronics -J794- out of mounting frame.
– Press release tabs on control unit 1 for information electronics -J794- and remove radio release tools -T10057- .

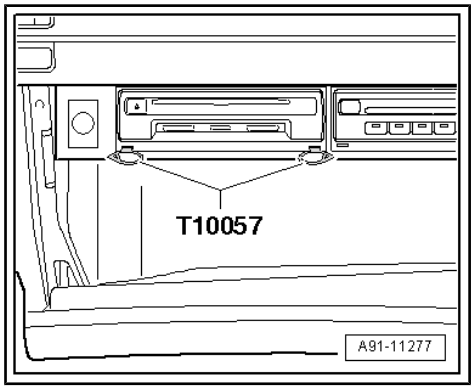

Installing

– Plug in connectors.
– Slide control unit 1 for information electronics -J794- into mounting frame until it engages.

1.15 Removing and installing data bus diagnostic interface -J533-

The data bus diagnostic interface -J533- is located behind the glove box.

Special tools and workshop equipment required

♦ Repair set for fibre optic cables -VAS 6223-

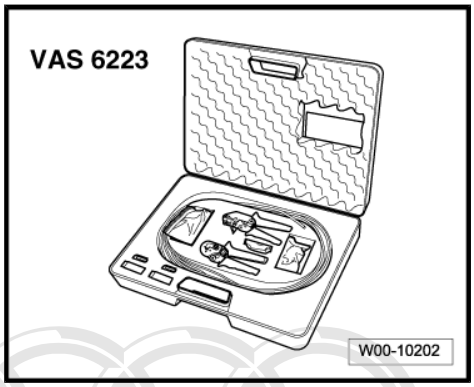

♦ Protective cap for cable connector -VAS 6223/9-
– When renewing control unit, select “Replacement” function for appropriate control unit in “Guided Fault Finding”.

To do so, use the vehicle diagnostic, testing and information system -VAS 5051- .

– Switch off all electrical equipment.
– Remove ignition key.

Removing

Protected by copyright. Copying for private or commercial purposes, in part or in whole, is not permitted unless authorised by AUDI AG. AUDI AG does not guarantee or accept any liability with respect to the correctness of information in this document. Copyright by AUDI AG.

– Remove the glove box ⇒ General body repairs, interior; Rep. Gr. 68 .
– Unplug all connectors -2- at data bus diagnostic interface -J533- -1-.

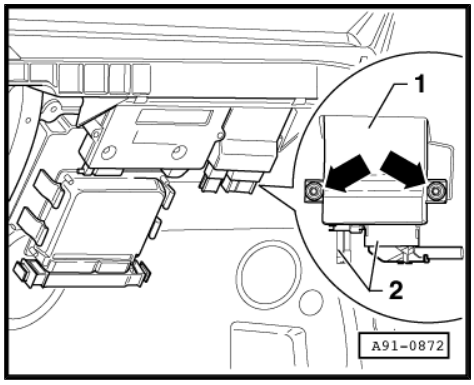

– Fit protective cap for cable connector -VAS 6223/9- -1- onto MOST bus connector -2-.

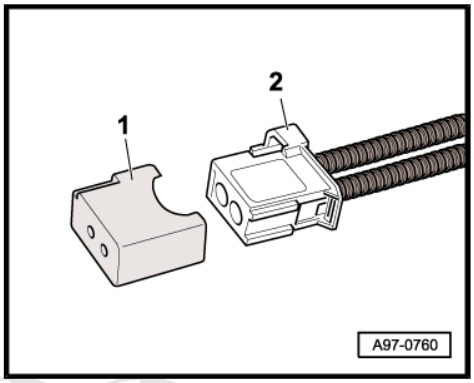

– Unscrew bolts -arrows- (2.5 Nm) and remove data bus diagnostic interface -J533- -1-.

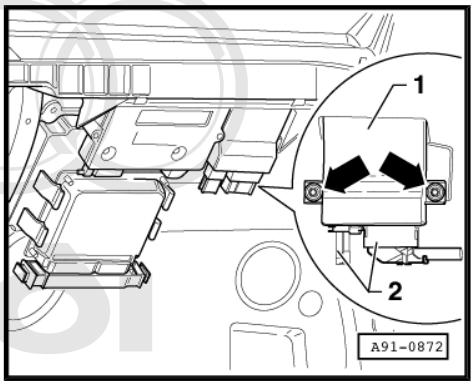

Installing

– Installation is performed in reverse sequence.

Protected by copyright. Copying for private or commercial purposes, in part or in whole, is not permitted unless authorized by AUDI AG. AUDI AG does not guarantee or accept any liability with respect to the correctness of information in this document. Copyright by AUDI AG.

1.16 Removing and installing display

For removing and installing the display unit for front information display and operating unit control unit -J685- (display) the work to be performed is subdivided as follows:

- Removing display: display defective / swivelling unit OK ⇒ page 23
- Removing swivelling unit with display: display OK / swivelling unit OK ⇒ page 24
- Removing swivelling unit with display: open and close display motor -V301- defective / swivelling unit not OK ⇒ page 24

1.16.1 Removing display

– Switch off all electrical equipment.

– Remove ignition key.

Removing

The display is closed.

– Remove dash panel vents on left and right side of display ⇒ General body repairs, interior; Rep. Gr. 70 .

– Remove trim panel for display unit for front information display and operating unit control unit -J685- ⇒ General body repairs, interior; Rep. Gr. 70 .

– Unscrew the two bolts -2- and -3- (2 Nm) in the swivelling unit -1-.
– Open display with open and close button for front display -E462- .
– Detach display from swivelling unit and unplug connector on display.

If the display cannot be detached, the two bolts are not yet sufficiently unscrewed.

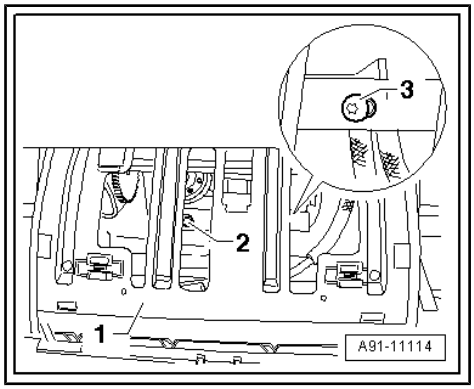

Installing

– Installation is performed in reverse sequence.

1.16.2 Removing swivelling unit with display

Removing swivelling unit with display: display OK / swivelling unit OK

Procedure for removing swivelling unit with display as part of body repairs.

Display must be open to remove swivelling unit with display.

– Switch off all electrical equipment.
– Remove ignition key.

Removing

– Remove dash panel vents on left and right side of display ⇒ General body repairs, interior; Rep. Gr. 70 .
– Remove instrument cluster trim panel ⇒ General body repairs, interior; Rep. Gr. 70 .
– Remove trim panel above glove box ⇒ General body repairs, interior; Rep. Gr. 70 .

The connector for open and close display motor -V301- is located behind driver's storage compartment.

– Remove driver's storage compartment ⇒ General body repairs, interior; Rep. Gr. 68 .
– Unplug connector for open and close display motor -V301- .
– Unscrew bolts -arrows- (3 Nm) on swivelling unit.
– Pull swivelling unit -1- out of dash panel -2-.
– Unplug connector on display.

Document is copyrighted. Copying for private or commercial purposes, in part or in whole, is not permitted unless authorised by AUDI AG. AUDI AG does not guarantee or accept any liability with respect to the correctness of information in this document. Copyright by AUDI AG.

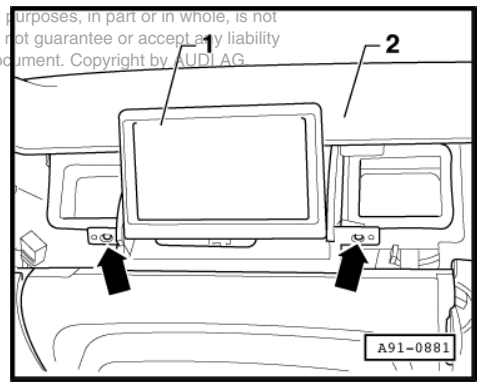

Installing

– Installation is performed in reverse sequence.

1.16.3 Removing defective swivelling unit with display

Removing swivelling unit with display, open and close display motor -V301- defective / swivelling unit not OK

Procedure for removing a defective swivelling unit or if swivelling unit is sticking or stiff.

– Switch off all electrical equipment.

– Remove ignition key.

Removing

– Remove vents at right and left of screen ⇒ General body repairs, interior; Rep. Gr. 70 .

– Remove instrument cluster trim panel ⇒ General body repairs, interior; Rep. Gr. 70 .

– Remove trim panel for display unit for front information display and operating unit control unit -J685- ⇒ General body repairs, interior; Rep. Gr. 70 .

– Remove trim panel above glove box ⇒ General body repairs, interior; Rep. Gr. 70 .

The connector for open and close display motor -V301- is located behind driver's storage compartment.

– Remove driver's storage compartment ⇒ General body repairs, interior; Rep. Gr. 68 .

– Unplug connector for open and close display motor -V301- .

Vehicles with manual release

The release cable -3- is located on the left-hand side of the right vent opening.

– Pull cable in direction of -arrow- and push trim -2- into dash panel with other hand until display -1- is completely open.

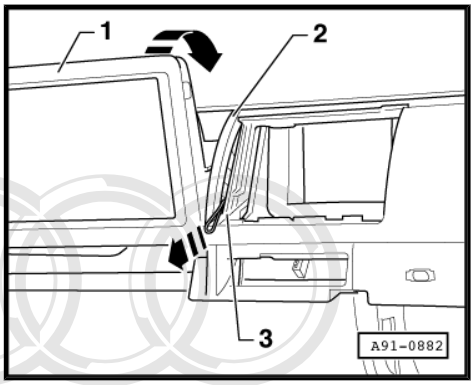

– Unscrew bolts -arrows- (3 Nm) on swivelling unit.

– Pull swivelling unit -1- out of dash panel -2-.

– Unplug connector on display.

The display can be disconnected from the swivelling unit.

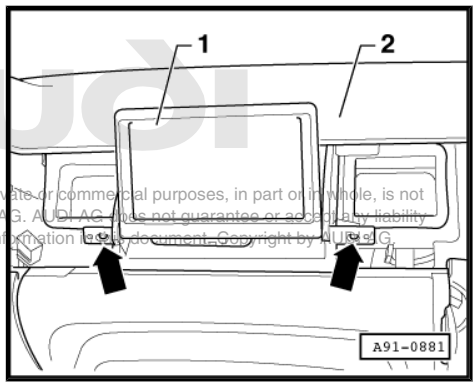

Protected by copyright. Copying for private or commercial purposes, in part or in whole, is not permitted unless authorised by AUDI AG. AUDI AG does not guarantee or accept any liability with respect to the correctness of information in this document. Copyright by AUDI AG.

– Unscrew bolts -arrows- (2 Nm).

Vehicles without manual release

Swivelling unit cannot be removed with display closed. Break off swivelling unit until it can be pulled out of dash panel.

Note

Take care not to scratch display as it will be required for re-installation.

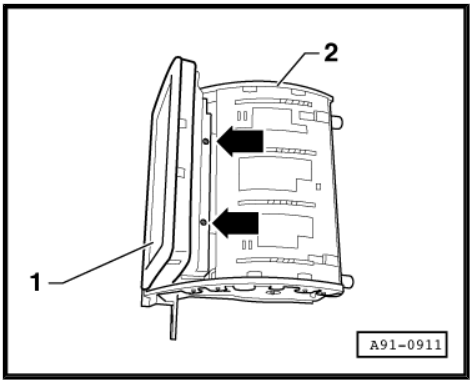

– Pry trim carrier -2- out of swivelling unit -1-.
– Try to move swivelling arm -3- with screwdriver so that display opens. If necessary break off swivelling arm -3-.
– Unscrew bolts on display (2 Nm).
– Remove display from swivelling unit.
– Unplug connector on display.
– Pull swivelling unit out of dash panel.

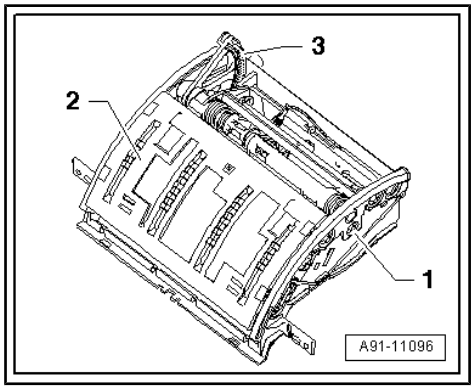

Installing

Installing display in new swivelling unit

– Fit display -1- in swivelling unit -2-.
– Tighten bolts -arrows- to 2 Nm.

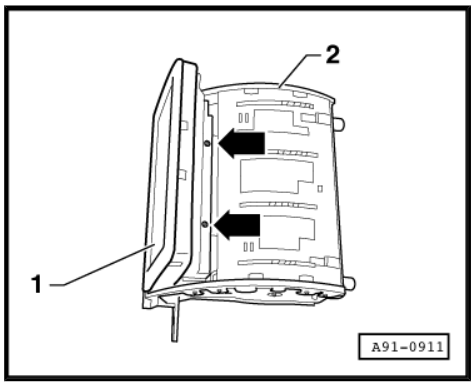

Installing new swivelling unit with display

– Installation of swivelling unit with display is performed in reverse sequence.

1.17 Removing and installing multimedia system operating unit -E380-

– Switch off all electrical equipment.
– Remove ignition key.

Procedure if one or several buttons are “sticking”

If one or several buttons in the multimedia system operating unit -E380- are sticking, this is probably caused by particles of dirt, sand or similar.

If the sticking is caused by sugary liquids (cola), it is not possible to eliminate the fault by applying compressed air. In that case the multimedia system operating unit -E380- must be renewed.

– As first step try to eliminate fault by applying compressed air (with or without oil) to clean the buttons. If fault is not eliminated the multimedia system operating unit -E380- must be renewed.

Removing

The multimedia system operating unit -E380- is secured to the centre console trim panel.

– Remove centre console trim panel ⇒ General body repairs, interior; Rep. Gr. 68 .
– Unplug all connectors.

Remove driver identification control unit -J589- prior to removing the multimedia system operating unit:

– Turn trim panel over onto reverse side.

Protected by copyright. Copying for private or commercial purposes, in part or in whole, is not permitted unless authorised by AUDI AG. AUDI AG does not guarantee or accept any liability with respect to the correctness of information in this document. Copyright by AUDI AG.

– Use suitable tool to pull retaining pin -2- out of driver identification control unit -J589- -1- in direction of -arrow-.

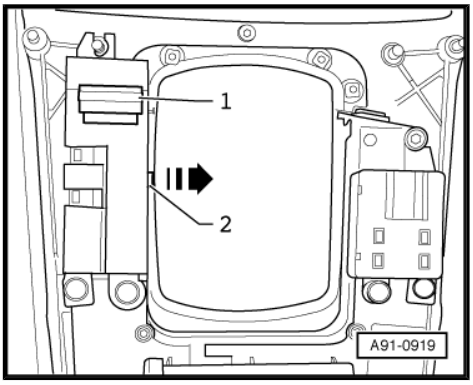

– Remove bolt -5- (1 Nm) and pull out driver identification control unit -J589- downwards.

Then remove parking brake contact switch -F321- :

– Remove bolts -3- (1 Nm) and pull parking brake contact switch -F321- -2- downwards out of multimedia system operating unit -E380- -1-.

– Then remove multimedia system operating unit -E380- from trim panel.

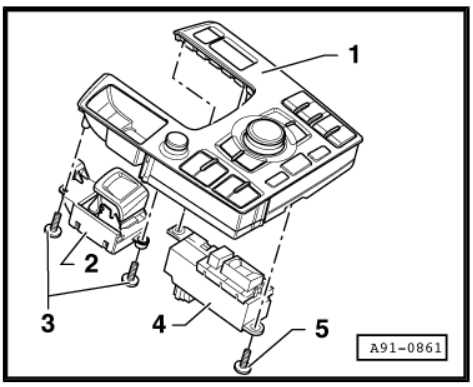

– Unscrew bolts -3- (1 Nm).

– Lift off multimedia system operating unit -E380- -2- from trim panel -1-.

Protected by copyright. Copying for private or commercial purposes, in part or in whole, is not permitted without written authority from Audi AG. Audi AG does not guarantee or accept any liability with respect to the correctness of information in this document. Copyright by AUDI AG.

Removing interior aerial 1 for entry and start authorisation -R138- :

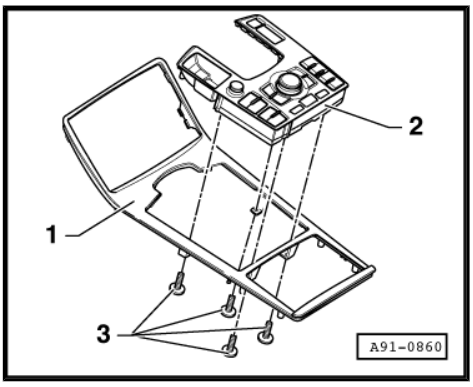

– Turn multimedia system operating unit -E380- -1- onto reverse side and unfasten bolt -3- (1.5 Nm).

– Detach interior aerial 1 for entry and start authorisation -R138- -2- from multimedia system operating unit -E380- -1-.

Installing

– Installation is performed in reverse sequence.

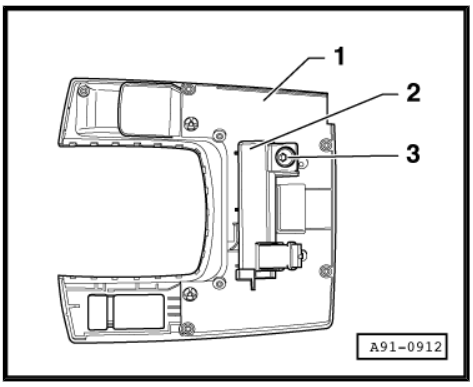

1.18 Removing and installing operating unit in front of centre console -E461-

– Switch off all electrical equipment.

– Remove ignition key.

Removing

– Remove trim with switch panel (right-side) ⇒ General body repairs, interior; Rep. Gr. 70 .

– Unscrew bolts -arrows- (0.5 Nm) on reverse side.

– Remove operating unit in front of centre console -E461- -2- from trim panel -1-.

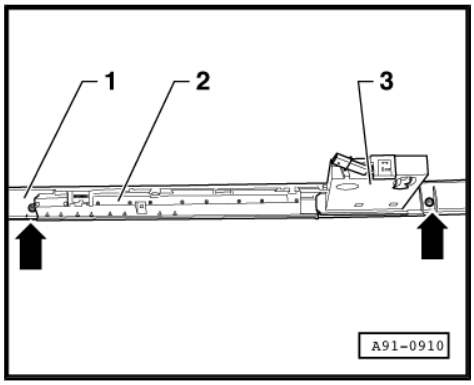

Installing

– Installation is performed in reverse sequence.

Protected by copyright. Copying for private or commercial purposes, in part or in whole, is not permitted unless authorised by AUDI AG. AUDI AG does not guarantee or accept any liability with respect to the correctness of information in this document. Copyright by AUDI AG.

2 Communication system (USA)

2.1 General notes (up to week 21/09)

The components of the systems radio -R- , navigation system with CD drive control unit -J401- , media player in position 1 -R118- , digital sound package control unit -J525- and data bus diagnostic interface -J533- are connected by a “ring” bus system. This “ring” is the fibre optic MOST Bus.

The connection to the other bus systems in the vehicle is provided by the data bus diagnostic interface -J533- .

The “central control unit” is the control unit for front display and information control panel -J523- . The signals required to display information on the instrument cluster display are transmitted via the MOST Bus to the data bus diagnostic interface -J533- and from there via the CAN Bus (instrument cluster) to the instrument cluster.

Fault finding is performed via the “Guided Fault Finding” using ⇒ Vehicle diagnosis, testing and information system VAS 5051.

Protected by copyright. Copying for private or commercial purposes, in part or in whole, is not permitted unless authorised by AUDI AG. AUDI AG does not guarantee or accept any liability with respect to the correctness of information in this document. Copyright by AUDI AG.

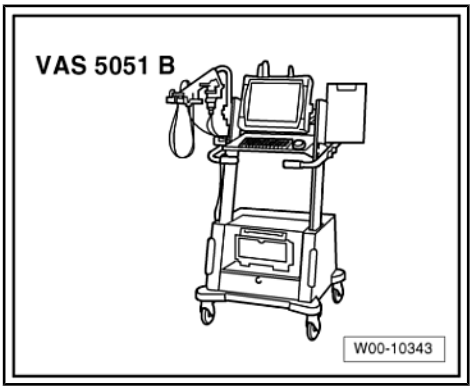

For more information, refer to ⇒ Self-study programme No. 286 ; "New data bus systems - LIN, MOST, Bluetooth" , ⇒ Self-study programme No. 293 ; "Audi A8 Infotainment" .

Notes on fibre optic MOST Bus

In addition to the CAN Bus systems, a fibre optic data bus system is also used.

Data is transmitted between the systems radio -R- , digital sound package control unit -J525- , CD changer -R41- , navigation system with CD drive control unit -J401- and data bus diagnostic interface -J533- via the MOST Bus.

A “fibre optic cable” is used as the connecting cable.

The fibre optic cables are fitted in corrugated tubes for protection.

It is important to ensure that the end faces of the connectors do not become dirty.

If connectors are unplugged: fit a protective cap for cable connector -VAS 6223/9- .

The fibre optic cables cannot be repaired; the entire cable has to be renewed in each case.

When installing fibre optic cables, be sure to observe the minimum bending radius of 25 mm. Do not crush or kink the cables.

Repairing fibre optic cables ⇒ Electrical system; Rep. Gr. 97 .

For more information, refer to ⇒ Self-study programme No. 286 ; "New data bus systems - LIN, MOST, Bluetooth" .

2.2 General notes (from week 22/09 onwards)

The MMI fitted from week 36/08 onwards is an enhanced version of the MMI which has been used up to now. The functions for control unit, mobile phone pre-installation, AMI, CD and DVD drives, navigation system (with hard disk) and SDS are all integrated in the control unit 1 for information electronics -J794- as one unit.

The radio -R- , the CD changer -R41- and the digital sound package control unit -J525- are externally linked to the system via the MOST bus. The basic sound systems are directly activated by the radio -R- , and SDARS is optionally integrated in the radio -R- .

MMI maximum equipment

- Control unit 1 for information electronics -J794- in glove box contains CD player / DVD player / navigation system / voice control system / SD memory card readers
- Internal hard drive (HD) to store navigation data and MP3 files
- Multimedia system operating unit -E380- in centre console (bottom)
- Display unit for front information display and operating unit control unit -J685- in dash panel (centre)
- CD changer -R41- / as an option connection for external audio sources -R199- (interface) in glove box
- Digital sound package control unit -J525- located in luggage compartment (rear left)
- Sound system: Standard/BOSE/Bang and Olufsen
- Radio -R- in luggage compartment (rear left)
- TV tuner -R78- in luggage compartment (rear left)
- Mobile phone pre-installation (fitted optionally)
- Bluetooth hands-free system (fitted optionally)
- Multi-function steering wheel (fitted optionally)

The exchange of data in the MMI systems takes place via the MOST bus.

The connection to other bus systems in the vehicle is handled by the data bus diagnostic interface -J533- .

Fault finding is performed via the “Guided Fault Finding” ⇒ Vehicle diagnosis, testing and information system VAS 5051.

For more information, refer to ⇒ Self-study programme No. 286 : "New data bus systems - LIN, MOST, Bluetooth"

Protected by copyright. Copying for private or commercial purposes, in part or in whole, is not permitted unless authorised by AUDI AG. AUDI AG does not guarantee or accept any liability with respect to the correctness of information in this document. Copyright by AUDI AG.

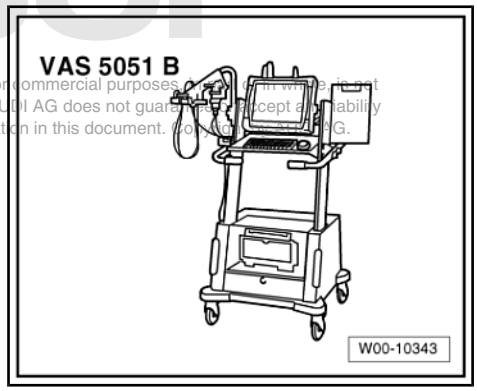

Layout of control unit 1 for information electronics -J794- (MMI)

The control unit 1 for information electronics -J794- is a third-generation MMI version. Depending on the equipment version, the control unit 1 for information electronics -J794- contains the following control units known from the second generation:

1 - Control unit for front display and information control panel -J523-

2 - CD player -R89-

3 - Navigation system with CD drive control unit -J401-

4 - Chip card reader for telephone -R115- / SD card reader

5 - Speech input control unit -J507-

6 - Bluetooth hands-free system

7 - Telephone transmitter and receiver unit -R36- (phone preinstallation)

8 - Internal hard drive (HD)

9 - Control unit 1 for information electronics -J794-

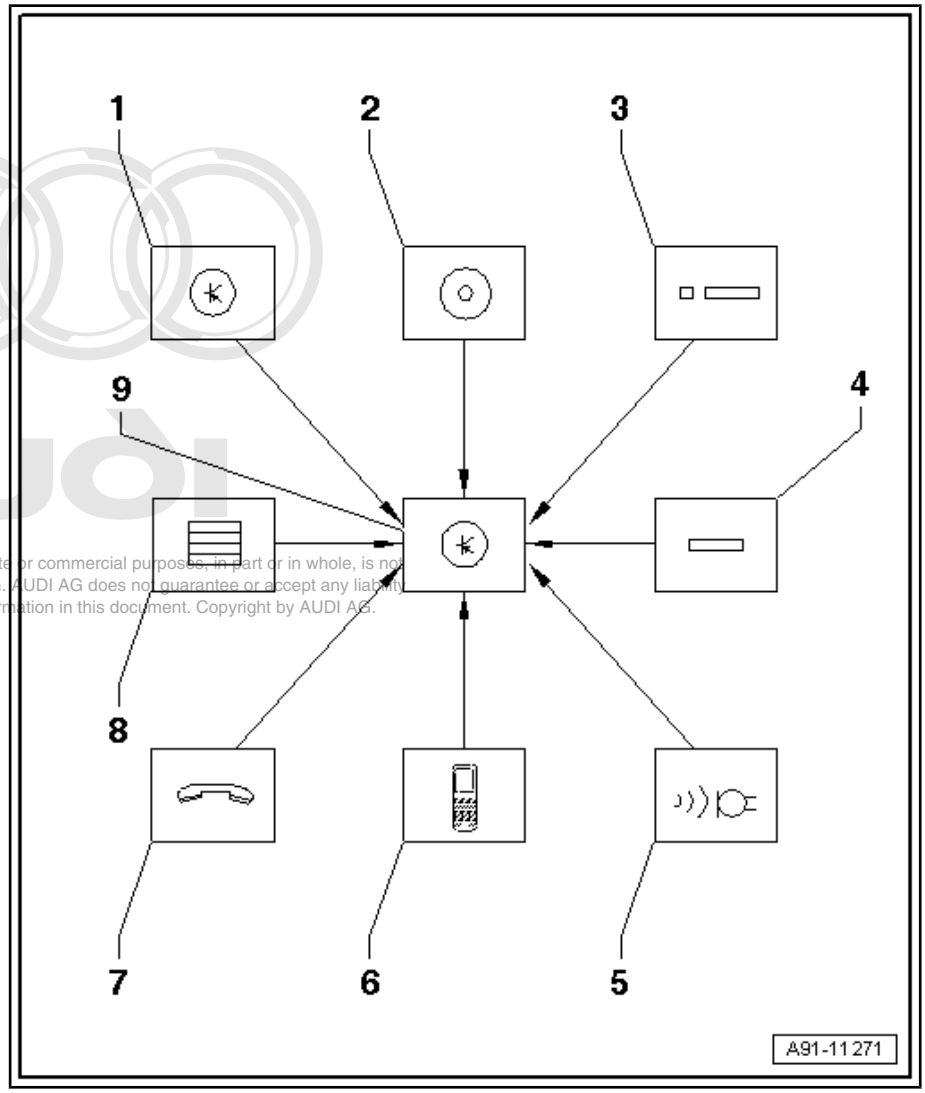

Protected by copyright. Copying for private or commercial purposes, in part or in whole, is not permitted unless authorised by AUDI AG. AUDI AG does not guarantee or accept any liability with respect to the correctness of information in this document. Copyright by AUDI AG.

Layout of radio -R- (MMI)

Depending on the equipment version, the radio -R- contains the following control units known from the second generation:

1 - Digital sound package control unit -J525-

2 - Radio -R-

3 - Radio -R- AM/FM tuner

4 - Satellite radio -R146-

5 - Not fitted

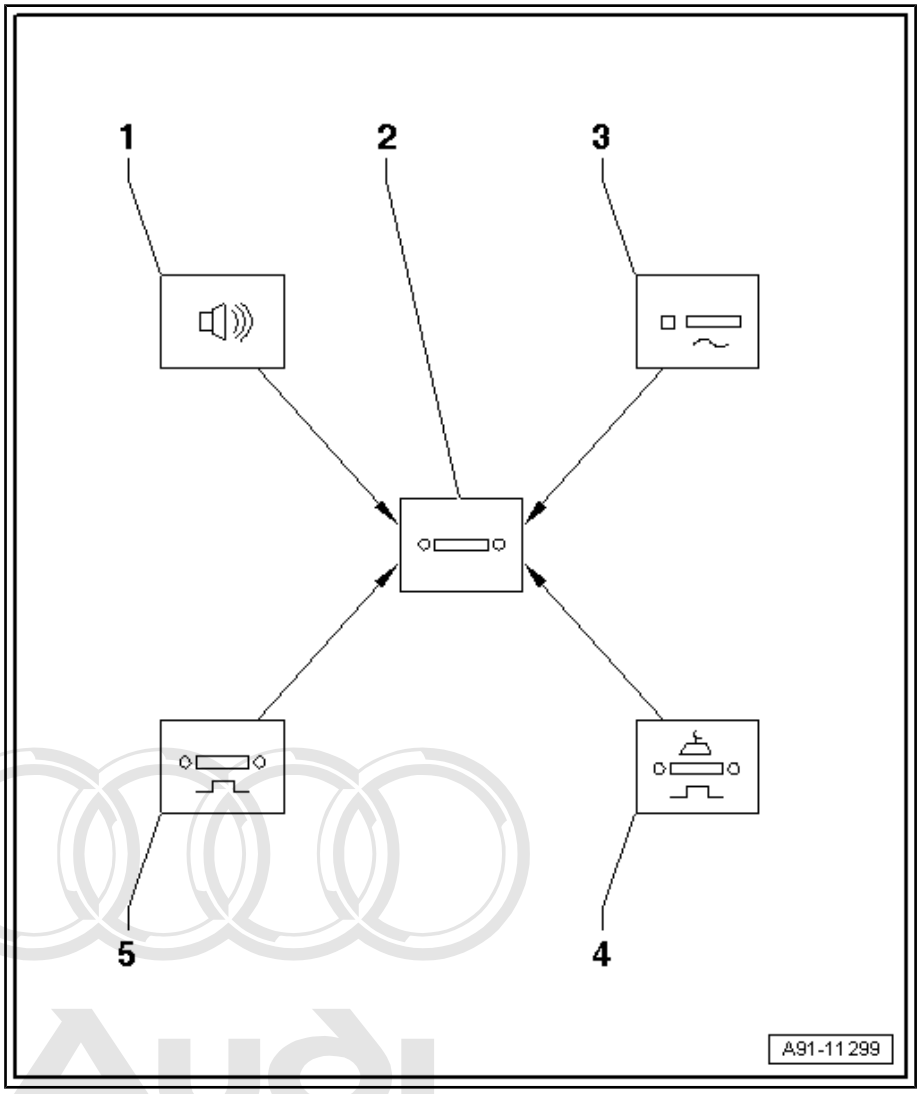

Layout of MOST bus (MMI)

Protected by copyright. Copying for private or commercial purposes, in part or in whole, is not permitted unless authorised by AUDI AG. AUDI AG does not guarantee or accept any liability with respect to the correctness of information in this document. Copyright by AUDI AG.

1 - Display unit for front information display and operating unit control unit -J685-

2 - Control unit 1 for information electronics -J794-

3 - MOST bus

4 - CD changer -R41-

5 - Not fitted

6 - Radio -R-

7 - Digital sound package control unit -J525-

8 - Data bus diagnostic interface -J533-

9 - Multimedia system operating unit -E380-

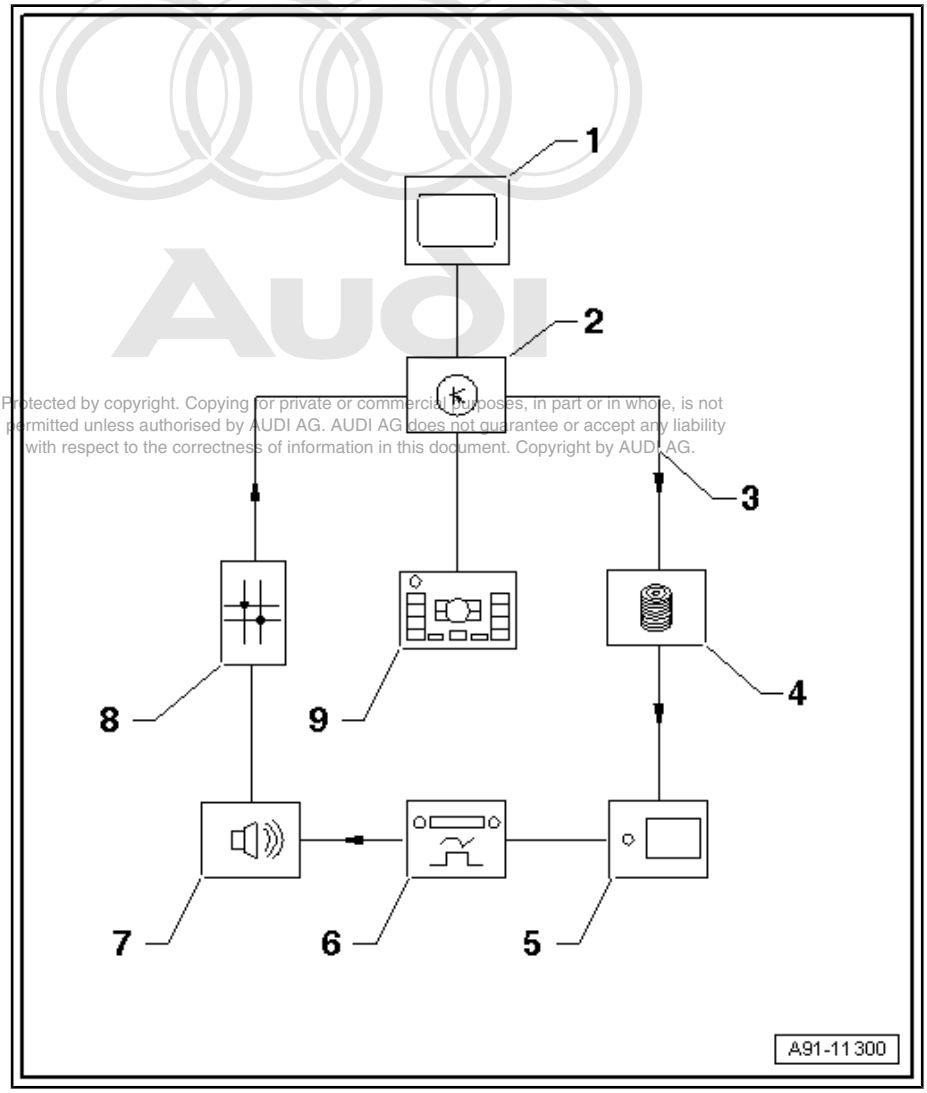

Protected by copyright. Copying for private or commercial purposes, in part or in whole, is not permitted unless authorised by AUDI AG. AUDI AG does not guarantee or accept any liability with respect to the correctness of information in this document. Copyright by AUDI AG.

Notes on MOST Bus

In addition to the CAN Bus systems, the fibre optic “MOST Bus” system is used.

A “fibre optic cable” is used as the connecting cable. The fibre optic cables are fitted in corrugated tubes for protection.

Renew the complete fibre optic cable whenever possible.

It is important to ensure that the end faces of the connectors do not become dirty.

If connectors are unplugged: fit a protective cap for cable connector -VAS 6223/9- .

When installing fibre optic cables, be sure to observe the minimum bending radius of 25 mm. Do not crush or kink the cables.

Repairing fibre optic cables ⇒ Electrical system; Rep. Gr. 97 .

For more information, refer to ⇒ Self-study programme No. 286 ; "New data bus systems - LIN, MOST, Bluetooth" .

2.3 MMI (up to week 21/09) - layout

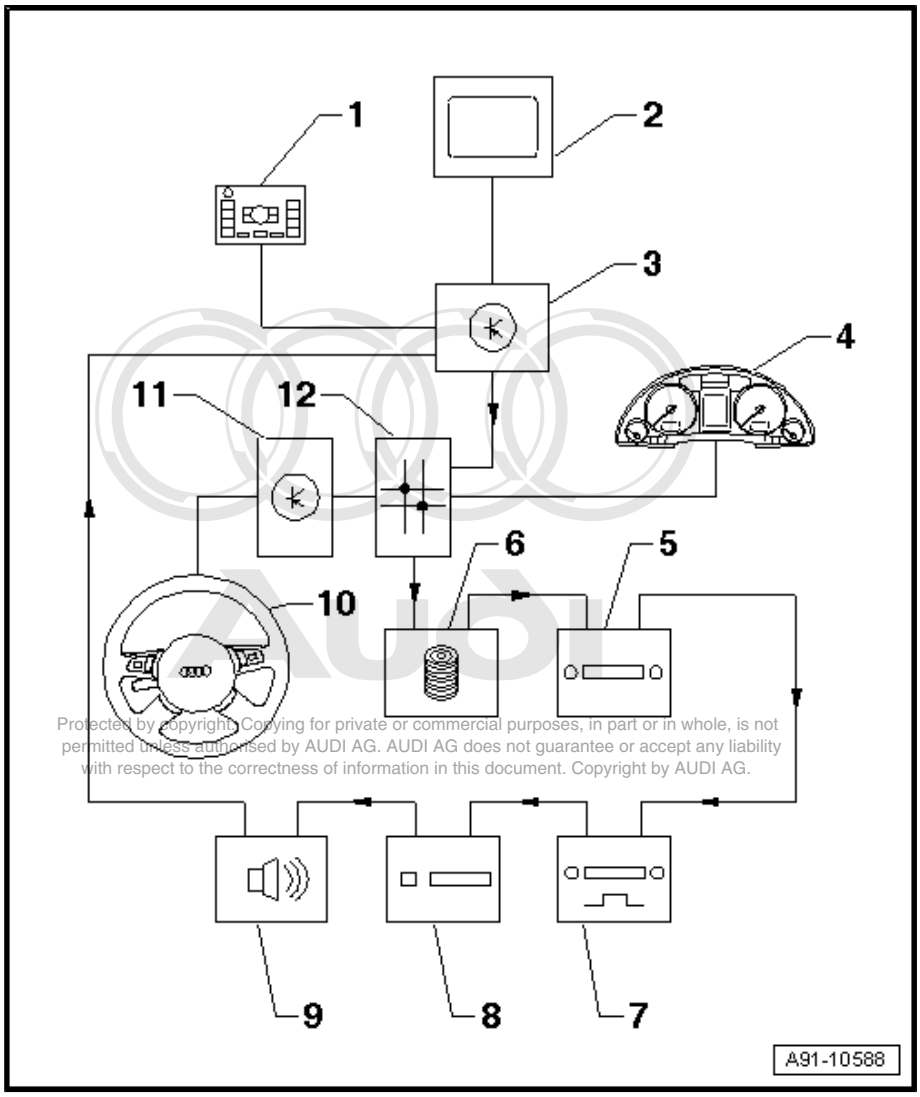

1 - Multimedia system operating unit -E380-

- ❑ In centre console (bottom)
- ❑ Pin assignment ⇒ page 14
- ❑ Removing and installing ⇒ page 26

2 - Display unit for front information display and operating unit control unit -J685-

- ❑ Display
- ❑ In dash panel (centre)
- ❑ Removing and installing ⇒ page 23

3 - Control unit for front display and information control panel -J523-

- ❑ Behind glove box
- ❑ Pin assignment (up to model year 2007) ⇒ page 9
- ❑ Pin assignment (from model year 2008 onwards) ⇒ page 10
- ❑ Removing and installing ⇒ page 19

4 - Control unit in dash panel insert -J285-

- ❑ Instrument cluster
- ❑ In dash panel
- ❑ Pin assignment ⇒ Electrical system; Rep. Gr. 90
- ❑ Removing and installing ⇒ Electrical system; Rep. Gr. 90

5 - Radio -R-

- ❑ Behind luggage compartment side trim (left-side)
- ❑ With optional speech input control unit -J507-
- ❑ Pin assignment, radio -R- (up to week 35/08) ⇒ page 70
- ❑ Removing and installing radio -R- (up to model year 2005) ⇒ page 109
- ❑ Removing and installing radio -R- (from model year 2006 onwards) ⇒ page 110

6 - Media player in position 1 -R118-

- ❑ In glove box

CD changer -R41-

- ❑ Pin assignment ⇒ page 80
- ❑ Removing and installing ⇒ page 116

CD player -R89-

- ❑ Pin assignment ⇒ page 80
- ❑ Removing and installing ⇒ page 116

MiniDisc player -R153-

Protected by copyright. Copying for private or commercial purposes, in part or in whole, is not permitted unless authorised by AUDI AG. AUDI AG does not guarantee or accept any liability with respect to the correctness of information in this document. Copyright by AUDI AG.

- ❑ Pin assignment ⇒ page 81
- ❑ Removing and installing ⇒ page 61

Connection for external audio sources -R199- (AMI)

- ❑ Pin assignment ⇒ page 82
- ❑ Removing and installing ⇒ page 117

- Media player in position 2 -R119-

- ❑ In glove box

CD changer -R41-

- ❑ Pin assignment ⇒ page 80
- ❑ Removing and installing ⇒ page 116

CD player -R89-

- ❑ Pin assignment ⇒ page 80
- ❑ Removing and installing ⇒ page 116

7 - Satellite radio -R146-

- ❑ Behind luggage compartment side trim (left-side)
- ❑ Pin assignment (up to week 21/09) ⇒ page 129
- ❑ Removing and installing (up to model year 2005) ⇒ page 134
- ❑ Removing and installing (from model year 2006 onwards) ⇒ page 135
- ❑ Removing and installing (vehicles with RSE "light") ⇒ page 136

8 - Navigation system with CD drive control unit -J401-

- ❑ Behind luggage compartment side trim (left-side)
- ❑ Pin assignment (up to week 35/08) ⇒ page 197
- ❑ Removing and installing ⇒ page 201

Protected by copyright. Copying for private or commercial purposes, in part or in whole, is not permitted unless authorised by AUDI AG. AUDI AG does not guarantee or accept any liability with respect to the correctness of information in this document. Copyright by AUDI AG.

9 - Digital sound package control unit -J525-

- ❑ Behind luggage compartment side trim (left-side)
- ❑ Pin assignment (BOSE) ⇒ page 74
- ❑ Removing and installing (BOSE) (up to model year 2005) ⇒ page 99
- ❑ Removing and installing (BOSE) (from model year 2006 onwards) ⇒ page 104
- ❑ Pin assignment (BOSE 6000) ⇒ page 75
- ❑ Removing and installing (BOSE 6000) ⇒ page 105
- ❑ Pin assignment (Bang & Olufsen) ⇒ page 77
- ❑ Removing and installing (Bang & Olufsen) ⇒ page 106

10 - Multi-function steering wheel

- ❑ Removing and installing buttons ⇒ page 255

11 - Steering column electronics control unit -J527-

- ❑ On steering column at steering column switch
- ❑ Pin assignment ⇒ Electrical system; Rep. Gr. 94
- ❑ Removing and installing ⇒ Electrical system; Rep. Gr. 94

12 - Data bus diagnostic interface -J533-

- ❑ Behind glove box
- ❑ Pin assignment ⇒ page 15
- ❑ Removing and installing ⇒ page 22

2.4 MMI (from week 22/09 onwards) - layout

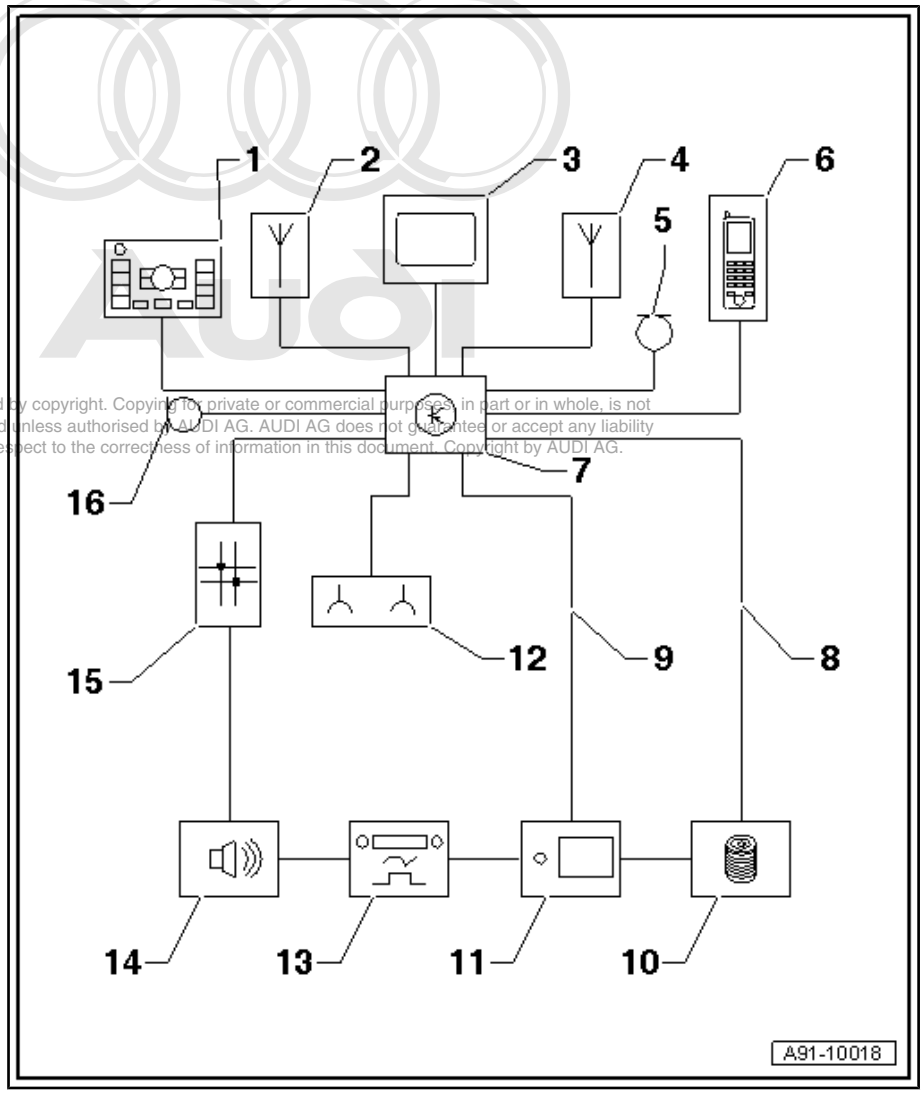

Protected by copyright. Copying for private or commercial purposes, in part or in whole, is not permitted unless authorised by AUDI AG. AUDI AG does not guarantee or accept any liability with respect to the correctness of information in this document. Copyright by AUDI AG.

1 - Multimedia system operating unit -E380- in centre console (bottom)

2 - Roof aerial -R216- (GPS aerial -R50-)

3 - Display unit for front information display and operating unit control unit -J685- in dash panel (centre)

4 - Not fitted

5 - Microphone unit in front roof module -R164- (front left microphone -R140-) in front interior light -W1-

6 - Not fitted

7 - Control unit 1 for information electronics -J794- in glove box (left-side)

8 - MOST bus

9 - FBAS wire

10 - CD changer -R41- in glove box (right-side)

11 - Not fitted

12 - Connection for external audio sources -R199- (interface) in glove box

13 - Radio -R- located behind luggage compartment side trim (left-side)

14 - Digital sound package control unit -J525- behind luggage compartment side trim (left-side)

15 - Data bus diagnostic interface -J533- behind glove box

16 - Microphone unit in front roof module -R164- (front right microphone -R141-) in front interior light -W1-

2.5 Connectors for MMI (from week 22/09 onwards)

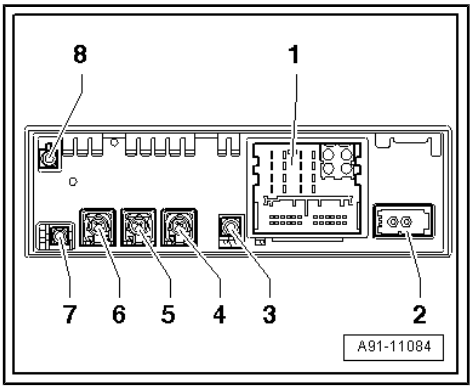

Control unit 1 for information electronics -J794-

1 - Connection block with four multi-pin connectors

2 - MOST bus

3 - Not used

4 - Multi-pin connector, 4-pin, grey (T4bd) to display unit for front information display and operating unit control unit -J685-

5 - Multi-pin connector, 4-pin, yellow (T4bc) to connection for external audio sources -R199-

6 - Not used

7 - GPS connection from roof aerial -R216-

8 - Not used

Note

Contacts which are not listed are not used.

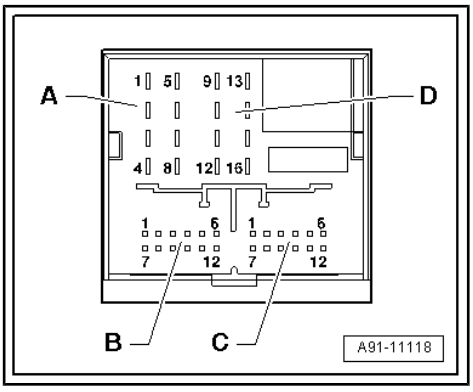

A - Multi-pin connector, 8-pin, brown (T8z)

1 - Not used

2 - Voltage supply to multimedia system operating unit -E380-

3 - Wake-up to multimedia system operating unit -E380-

4 - Not used

5 - Not used

6 - Res MU to multimedia system operating unit -E380-

7 - Open circuit diagnostic lead

Protected by copyright. Copying for private or commercial purposes, in part or in whole, is not permitted unless authorised by AUDI AG. AUDI AG does not guarantee or accept any liability with respect to the correctness of information in this document. Copyright by AUDI AG.

B - Multi-pin connector, 12-pin, blue (T12y)

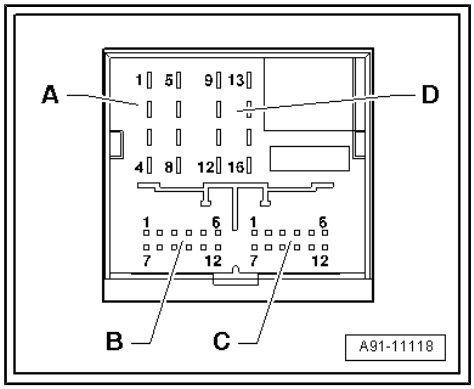

Left-hand drive vehicle

2 - Microphone input (+) from microphone unit in front roof module -R164- (front right microphone -R141-)

3 - Microphone input (–) from microphone unit in front roof module -R164- (front right microphone -R141-)

5 - FBAS wire (–) from reversing camera system control unit -J772-

8 - Microphone input (+) from microphone unit in front roof module -R164- (front left microphone -R140-)

9 - Microphone input (–) from microphone unit in front roof module -R164- (front left microphone -R140-)

11 - FBAS wire (+) from reversing camera system control unit -J772-

Right-hand drive vehicle

2 - Microphone input (+) from microphone unit in front roof module -R164- (front left microphone -R140-)

3 - Microphone input (–) from microphone unit in front roof module -R164- (front left microphone -R140-)

5 - FBAS wire (–) from reversing camera system control unit -J772-

8 - Microphone input (+) from microphone unit in front roof module -R164- (front right microphone -R141-)

9 - Microphone input (–) from microphone unit in front roof module -R164- (front right microphone -R141-)

11 - FBAS wire (+) from reversing camera system control unit -J772-

C - Multi-pin connector, 12-pin, green (T12z)

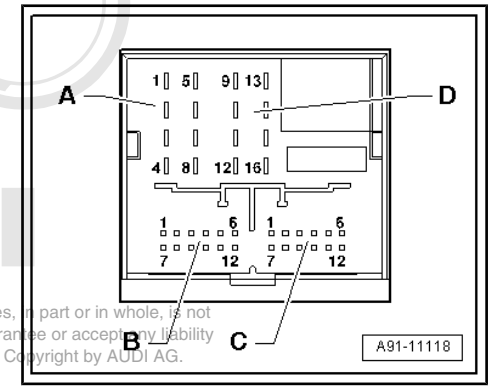

All pins are connected to the connection for external audio sources -R199- .

1 - NF in, earth (low frequency)

2 - NF in, right-side (low frequency)

3 - USB (+5V)

4 - USB (earth)

5 - Not used

6 - Detect

7 - NF in, left-side (low frequency)

8 - NF in, screen earth (low frequency)

9 - FBAS wire (+)

10 - FBAS wire (–)

11 - iPod data

12 - iPod data

Protected by copyright. Copying for private or commercial purposes, in part or in whole, is not permitted unless authorised by AUDI AG. AUDI AG does not guarantee or accept any liability with respect to the correctness of information in this document. Copyright by AUDI AG.

D - Multi-pin connector, 8-pin, black (T8)

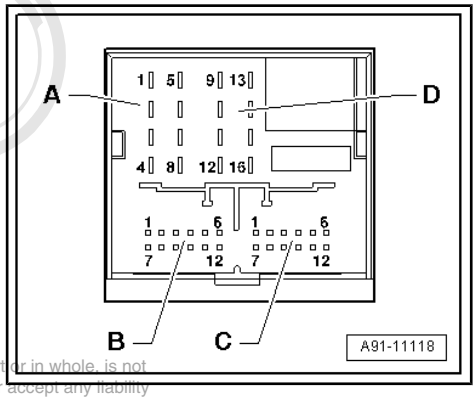

10 - Data from multimedia system operating unit -E380-

11 - Data to multimedia system operating unit -E380-

12 - Terminal 31

14 - Res BT from multimedia system operating unit -E380-

15 - Terminal 30

16 - Earth to multimedia system operating unit -E380-

Protected by copyright. Copying for private or commercial purposes, in part or in whole, is not permitted unless authorised by AUDI AG. AUDI AG does not guarantee or accept any liability with respect to the correctness of information in this document. Copyright by AUDI AG.

2 - MOST bus

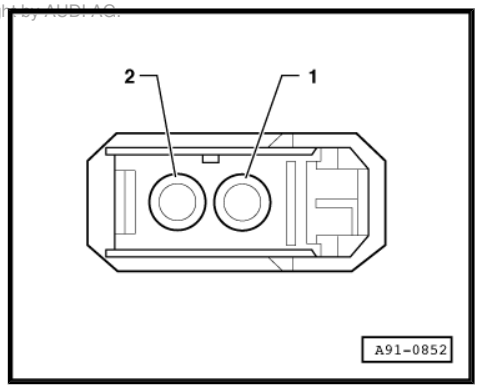

1 - Input

2 - Output

4 - Multi-pin connector, 4-pin, grey (T4bd)

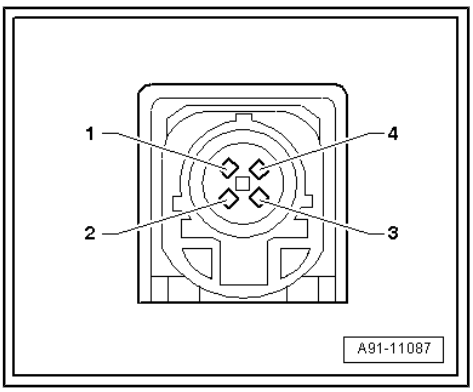

All pins are connected to the display unit for front information display and operating unit control unit -J685- .

1 - LVDS (–)

2 - LIN

3 - LVDS (+)

4 - Earth

5 - Multi-pin connector, 4-pin, yellow (T4bc)

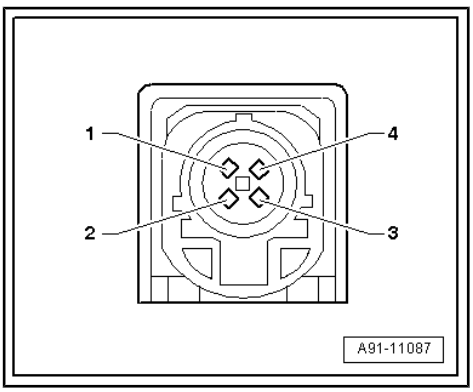

All pins are connected to the connection for external audio sources -R199- .

1 - D (+)

2 - iPod detected

3 - D (–)

4 - Earth

2.6 Microphone unit in front roof module - R164- - overview

The microphone unit in front roof module -R164- in front interior light -W1- consists of up to three microphones.

From week 22/04 onwards only two microphones are fitted.

One microphone (telephone microphone -R38-) is connected directly to the telephone transmitter and receiver unit -R36- . The

other microphones are connected to the digital sound package control unit -J525- .

Microphone unit in front roof module -R164-

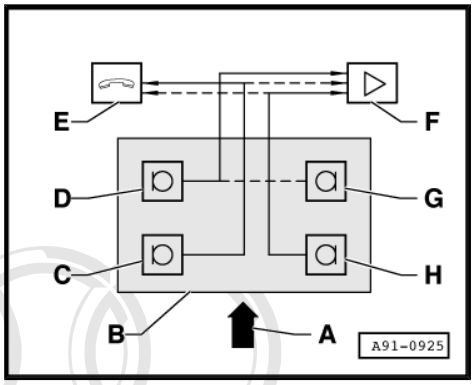

A - Direction of travel

B - Front interior light -W1-

C - Microphone 1 (black/grey) to digital sound package control unit -J525- / telephone transmitter and receiver unit -R36-

D - Microphone 2 (white) to digital sound package control unit -J525- (only on LHD vehicles) up to week 21/04

E - Telephone transmitter and receiver unit -R36-

F - Digital sound package control unit -J525-

G - Microphone 4 (red) to digital sound package control unit -J525- (only on RHD vehicles) up to week 21/04

H - Microphone 3 (blue/green) to digital sound package control unit -J525- / telephone transmitter and receiver unit -R36-

Removing and installing microphone unit in front roof module -R164- ⇒ page 168 .

2.6.1 Installation tables (up to week 21/04)

Protected by copyright. Copying for private or commercial purposes, in part or in whole, is not permitted unless authorised by AUDI AG. AUDI AG does not guarantee or accept any liability with respect to the correctness of information in this document. Copyright by AUDI AG.

Standard

Microphone	Telephone and SDS	SDS	Telephone	Without telephone and SDS
1 (3)	X	X	X	
2 (4)	X	X		
3 (1)	X			

Figures in brackets (...) apply to RHD vehicles

BOSE

Microphone	Telephone and SDS	SDS	Telephone	Without telephone and SDS
1 (3)	X	X	X	X
2 (4)	X	X	X	
3 (1)	X			

Figures in brackets (...) apply to RHD vehicles

2.6.2 Installation tables (from week 22/04 on-wards)

Standard

Microphone	Telephone and SDS	SDS	Telephone	Without telephone and SDS
1 (3)	X	X	X	
3 (1)	X			

Figures in brackets (...) apply to RHD vehicles

BOSE

Microphone	Telephone and SDS	SDS	Telephone	Without telephone and SDS
1 (3)	X	X	X	X
3 (1)	X			

Figures in brackets (...) apply to RHD vehicles

2.6.3 Microphone unit in front roof module -R164- (from week 22/09 onwards)

The microphone unit in front roof module -R164- is fitted in the front interior light -W1- . There are up to three microphones installed (depending on equipment).

One of the microphones (internal microphone -R74-) is connected directly to the digital sound package control unit -J525- . The other microphones are connected to the control unit 1 for information electronics -J794- .

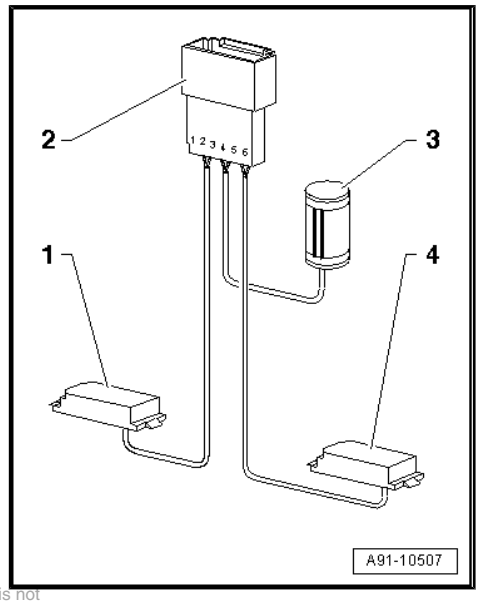

Microphone unit in front roof module -R164-

Left-hand drive vehicles:

1 - Front left microphone -R140- (black)

2 - 6-pin connector, blue (T6o), pins 1-2: front left microphone -R140- (black), pins 3-4: internal microphone -R74- (black), pins 5-6: front right microphone -R141- (blue)

3 - Internal microphone -R74- (black)

4 - Front right microphone -R141- (blue)

Right-hand drive vehicles:

1 - Front right microphone -R141- (blue)

2 - 6-pin connector, blue (T6o), pins 1-2: front right microphone -R141- (blue), pins 3-4: internal microphone -R74- (black), pins 5-6: front left microphone -R140- (black)

Protected by copyright. Copying for private or commercial purposes, in part or in whole, is not permitted unless authorised by AUDI AG. AUDI AG does not guarantee or accept any liability with respect to the correctness of information in this document. Copyright by AUDI AG.

3 - Internal microphone -R74- (black)

4 - Front left microphone -R140- (black)

Removing and installing microphone unit in front roof module -R164- ⇒ page 168 .

2.7 MMI (from week 22/09 onwards) - overview of fitting locations

1 - Control unit 1 for information electronics -J794-

- In glove box (left-side)
- Pin assignment (from week 22/09 onwards) ⇒ page 37
- Removing and installing (from week 36/08 onwards) ⇒ page 21

2 - Display unit for front information display and operating unit control unit -J685-

- In dash panel (centre)
- Pin assignment (from week 36/08 onwards) ⇒ page 14
- Removing and installing ⇒ page 23

3 - Multimedia system operating unit -E380-

- In centre console (bottom)
- Pin assignment ⇒ page 14
- Removing and installing ⇒ page 26

4 - Radio -R-

- Behind luggage compartment side trim (left-side)
- Pin assignment (from week 22/09 onwards) ⇒ page 130
- Removing and installing (from week 36/08 onwards) ⇒ page 112

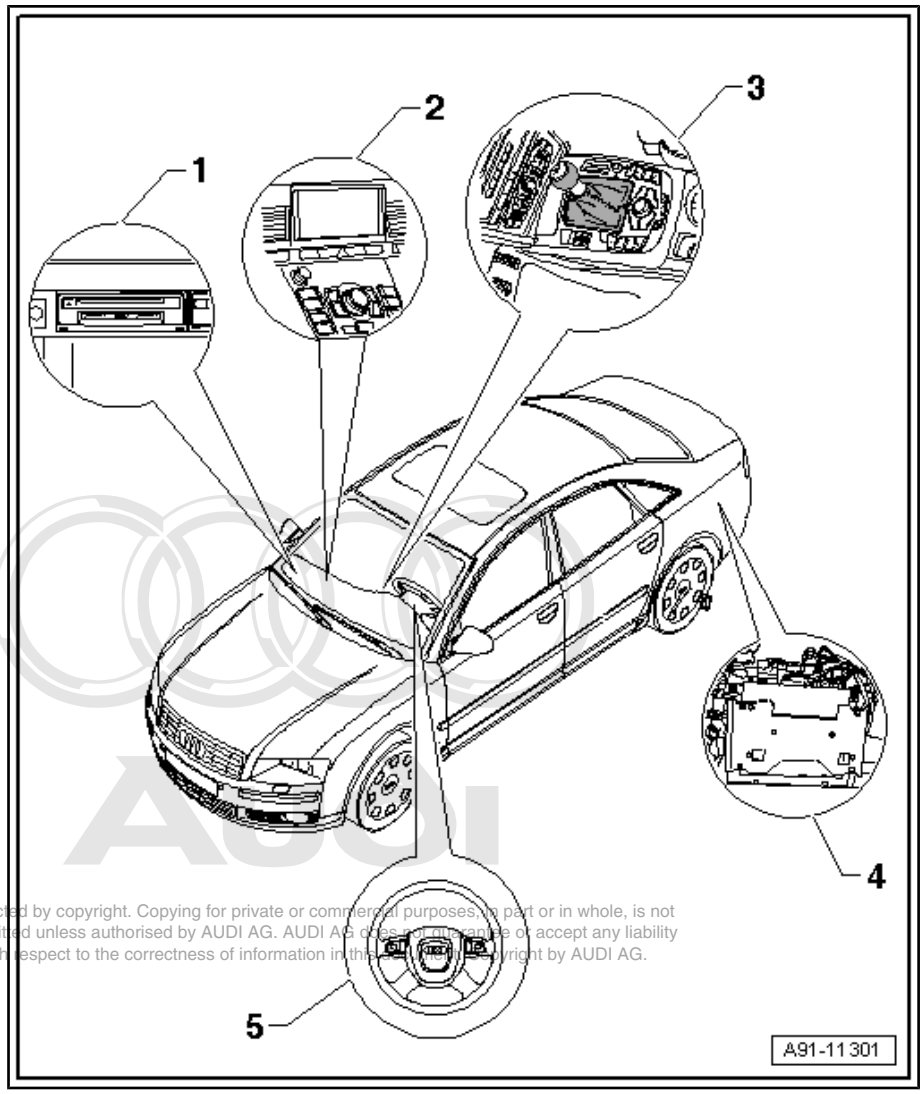

Protected by copyright. Copying for private or commercial purposes, in part or in whole, is not permitted unless authorised by AUDI AG. AUDI AG does not guarantee or accept any liability with respect to the correctness of information in this document. Copyright by AUDI AG.

- Digital sound package control unit -J525-

- Behind luggage compartment side trim (left-side)
- Pin assignment (BOSE 6000) ⇒ page 75
- Removing and installing (BOSE 6000) ⇒ page 105
- Pin assignment (Bang & Olufsen) ⇒ page 77
- Removing and installing (Bang & Olufsen) ⇒ page 106

5 - Multi-function steering wheel

- Removing and installing buttons ⇒ page 255

3 Communication system (Japan)

3.1 General notes (up to week 21/09)

The components of the systems radio -R- / navigation system with CD drive control unit -J401- / TV tuner -R78- / media player in position 1 -R118- / media player in position 2 -R119- / digital sound package control unit -J525- / data bus diagnostic interface -J533- are connected by a “ring” bus system. This “ring” is the fibre optic MOST Bus.

The connection to the other bus systems in the vehicle is provided by the data bus diagnostic interface -J533- .

The “central control unit” is the control unit for front display and information control panel -J523- . The signals required to display information on the instrument cluster display are transmitted via the MOST Bus to the data bus diagnostic interface -J533- and from there via the CAN Bus (instrument cluster) to the instrument cluster.

Fault finding is performed via the “Guided Fault Finding” ⇒ Vehicle diagnosis, testing and information system VAS 5051.

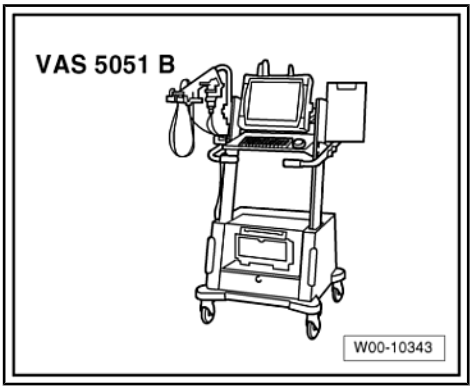

For more information, refer to ⇒ Self-study programme No. 286 ; "New data bus systems - LIN, MOST, Bluetooth" , ⇒ Self-study programme No. 293 ; "Audi A8 Infotainment" .

Notes on fibre optic MOST Bus

In addition to the CAN Bus systems, a fibre optic data bus system is also used.

Data is transmitted between the systems radio -R- / digital sound package control unit -J525- / TV tuner -R78- / media player in position 1 -R118- / media player in position 2 -R119- , navigation system with CD drive control unit -J401- / data bus diagnostic interface -J533- via the MOST bus.

A “fibre optic cable” is used as the connecting cable.

The fibre optic cables are fitted in corrugated tubes for protection.

It is important to ensure that the end faces of the connectors do not become dirty.

If connectors are unplugged: fit a protective cap for cable connector -VAS 6223/9- .

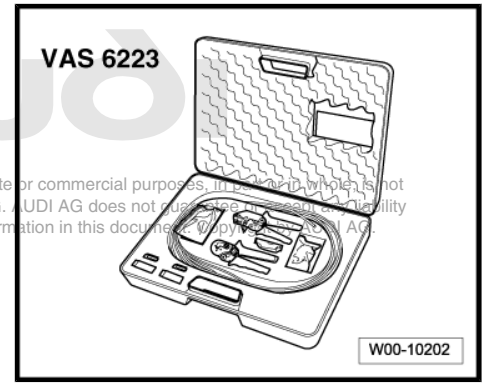

The fibre optic cables cannot be repaired; the entire cable has to be renewed in each case.

When installing fibre optic cables, be sure to observe the minimum bending radius of 25 mm. Do not crush or kink the cables.

Fibre optic cables ⇒ Electrical system; Rep. Gr. 97

For more information, refer to ⇒ Self-study programme No. 286 ; "New data bus systems - LIN, MOST, Bluetooth" .

Protected by copyright. Copying for private or commercial purposes, in part or in whole, is not permitted unless authorised by AUDI AG. AUDI AG does not guarantee or accept any liability with respect to the correctness of information in this document. Copyright by AUDI AG.

3.2 General notes (from week 22/09 onwards)

The MMI fitted from week 22/09 onwards is an enhanced version of the MMI which has been used up to now. The functions for control unit, mobile phone pre-installation, AMI, CD and DVD drives and navigation system (with hard disk) are all integrated in the control unit 1 for information electronics -J794- as one unit.

The radio -R- , CD changer -R41- , TV tuner -R78- and the digital sound package control unit -J525- are externally linked to the system via the MOST Bus. The basic sound systems are directly activated by the radio -R- , and DAB is optionally integrated in the radio -R- .

MMI maximum equipment

- Control unit 1 for information electronics -J794- in glove box contains CD player / DVD player / navigation system / SD memory card readers
- Internal hard drive (HD) to store navigation data and MP3 files
- Multimedia system operating unit -E380- in centre console (bottom)
- Display unit for front information display and operating unit control unit -J685- in dash panel (centre)
- CD changer -R41- / as an option connection for external audio sources -R199- (interface) in glove box
- Digital sound package control unit -J525- located in luggage compartment (rear left)
- Sound system: Standard/BOSE/Bang and Olufsen
- Radio -R- in luggage compartment (rear left)
- TV tuner -R78- in luggage compartment (rear left)
- Bluetooth hands-free system (fitted optionally)
- Multi-function steering wheel (fitted optionally)

Protected by copyright. Copying for private or commercial purposes, in part or in whole, is not permitted unless authorised by AUDI AG. AUDI AG does not guarantee or accept any liability with respect to the correctness of information in this document. Copyright by AUDI AG.

The exchange of data in the MMI systems takes place via the MOST bus.

The connection to other bus systems in the vehicle is handled by the data bus diagnostic interface -J533- .

Fault finding is performed via the “Guided Fault Finding” ⇒ Vehicle diagnosis, testing and information system VAS 5051.

For more information, refer to ⇒ Self-study programme No. 286 ; "New data bus systems - LIN, MOST, Bluetooth" .

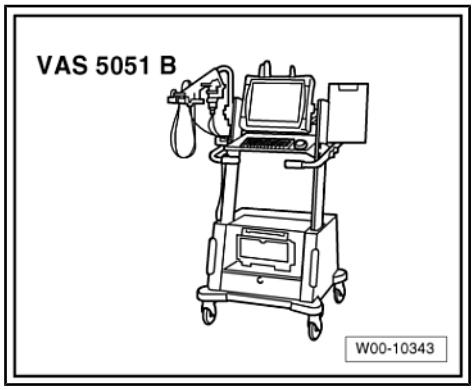

Layout of control unit 1 for information electronics -J794- (MMI)

The control unit 1 for information electronics -J794- is a third-generation MMI version. Depending on the equipment version, the control unit 1 for information electronics -J794- contains the following control units known from the second generation:

1 - Control unit for front display and information control panel -J523-

2 - CD player -R89-

3 - Navigation system with CD drive control unit -J401-

4 - SD card reader

5 - Not fitted

6 - Bluetooth hands-free system

7 - Not fitted

8 - Internal hard drive (HD)

9 - Control unit 1 for information electronics -J794-

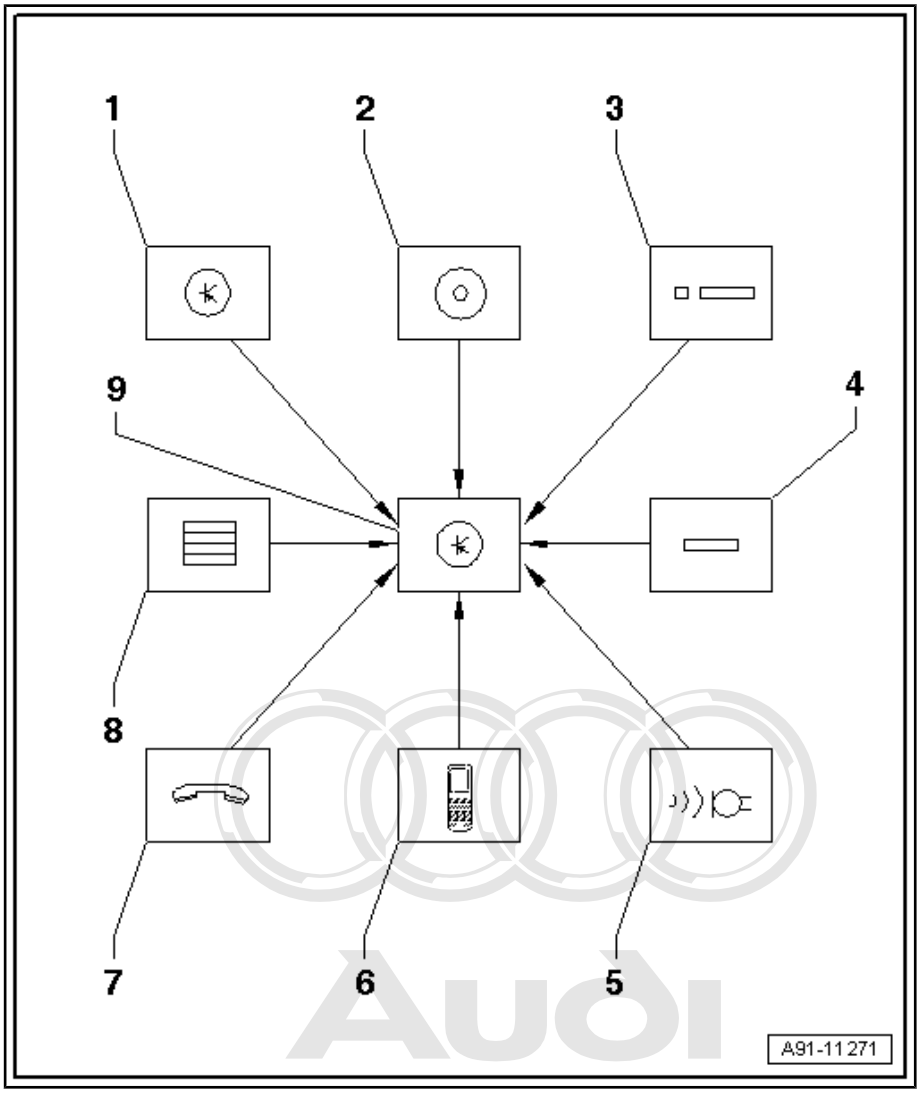

Protected by copyright. Copying for private or commercial purposes, in part or in whole, is not permitted unless authorised by AUDI AG. AUDI AG does not guarantee or accept any liability with respect to the correctness of information in this document. Copyright by AUDI AG.

Layout of radio -R- (MMI)

Depending on the equipment version, the radio -R- contains the following control units known from the second generation:

1 - Digital sound package control unit -J525-

2 - Radio -R-

3 - Radio -R- AM/FM tuner

4 - Not fitted

5 - Not fitted

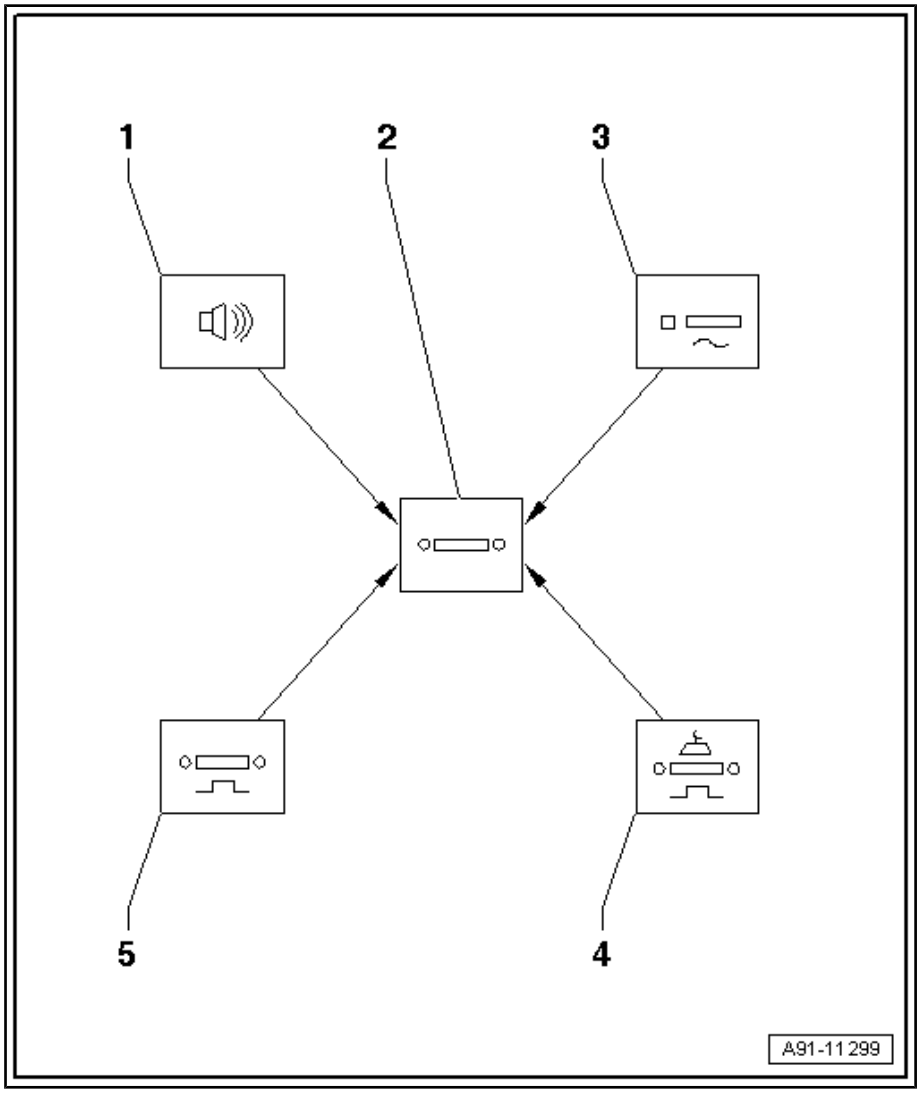

Layout of MOST bus (MMI)

Protected by copyright. Copying for private or commercial purposes, in part or in whole, is not permitted unless authorised by AUDI AG. AUDI AG does not guarantee or accept any liability with respect to the correctness of information in this document. Copyright by AUDI AG.

1 - Display unit for front information display and operating unit control unit -J685-

2 - Control unit 1 for information electronics -J794-

3 - MOST bus

4 - CD changer -R41-

5 - TV tuner -R78-

6 - Radio -R-

7 - Digital sound package control unit -J525-

8 - Data bus diagnostic interface -J533-

9 - Multimedia system operating unit -E380-

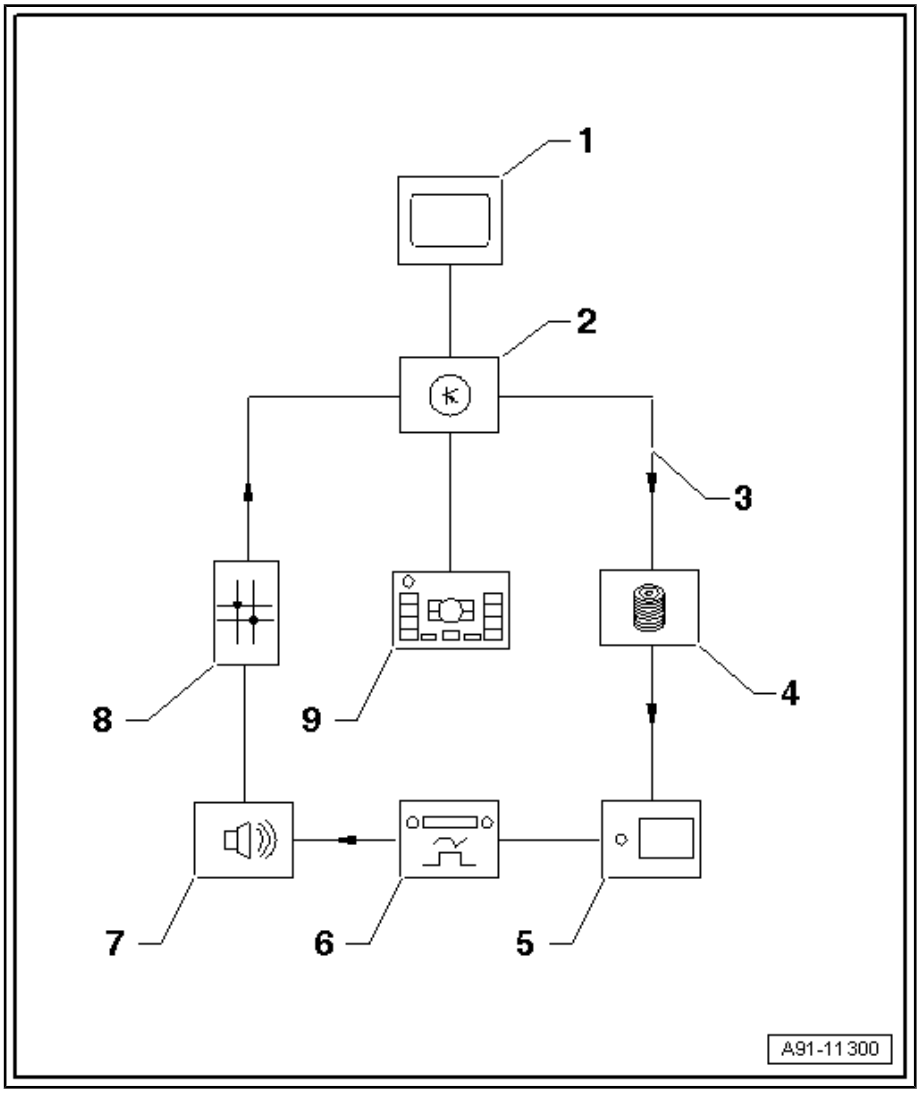

Notes on MOST Bus

In addition to the CAN Bus systems, the fibre optic “MOST Bus” system is used.

A “fibre optic cable” is used as the connecting cable. The fibre optic cables are fitted in corrugated tubes for protection.

Renew the complete fibre optic cable whenever possible.

It is important to ensure that the end faces of the connectors do not become dirty.

If connectors are unplugged: fit a protective cap for cable connector -VAS 6223/9- .

When installing fibre optic cables, be sure to observe the minimum bending radius of 25 mm. Do not crush or kink the cables.

Repairing fibre optic cables ⇒ Electrical system; Rep. Gr. 97 .

For more information, refer to ⇒ Self-study programme No. 286 ; "New data bus systems - LIN, MOST, Bluetooth"

Protected by copyright. Copying for private or commercial purposes, in part or in whole, is not permitted unless authorised by AUDI AG. AUDI AG does not guarantee or accept any liability with respect to the correctness of information in this document. Copyright by AUDI AG.

3.3 MMI (up to model year 2007) - layout

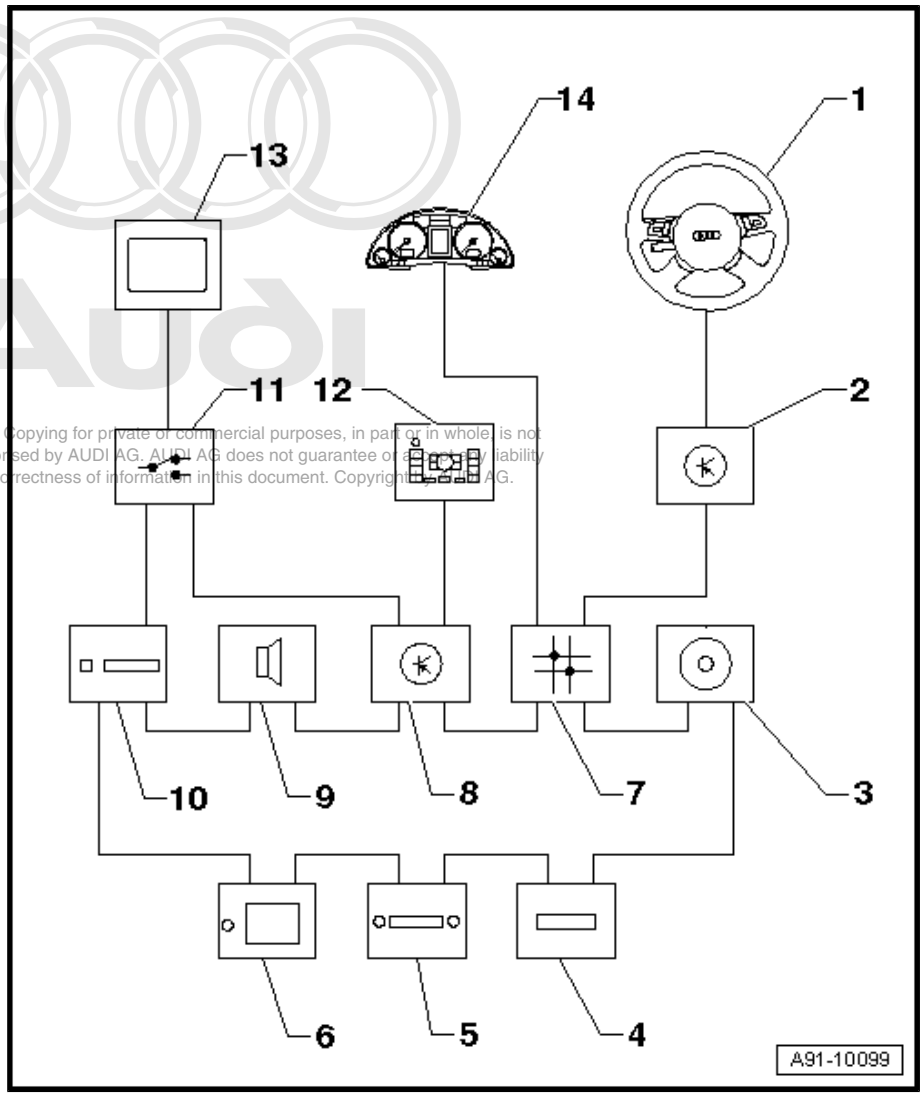

1 - Multi-function steering wheel

- ❑ Removing and installing buttons ⇒ page 255

2 - Steering column electronics control unit -J527-

- ❑ On steering column at steering column switch
- ❑ Pin assignment ⇒ Electrical system; Rep. Gr. 94
- ❑ Removing and installing ⇒ Electrical system; Rep. Gr. 94

3 - Media player in position 1 - R118-

- ❑ In glove box

MiniDisc player -R153-

- ❑ Pin assignment ⇒ page 56
- ❑ Removing and installing ⇒ page 61

Connection for external audio sources -R199- (AMI)

- ❑ Pin assignment ⇒ page 82
- ❑ Removing and installing ⇒ page 117

4 - Media player in position 2 - R119-

- ❑ In glove box

CD changer -R41-

- ❑ Pin assignment ⇒ page 80
- ❑ Removing and installing ⇒ page 116

CD player -R89-

- ❑ Pin assignment ⇒ page 80
- ❑ Removing and installing ⇒ page 116

5 - Radio -R-

- ❑ Behind luggage compartment side trim (left-side)
- ❑ Pin assignment (up to week 35/08) ⇒ page 70
- ❑ Removing and installing (up to model year 2005) ⇒ page 109
- ❑ Removing and installing (from model year 2006 onwards) ⇒ page 110

6 - TV tuner -R78-

- ❑ Behind luggage compartment side trim (left-side)
- ❑ Pin assignment (up to week 21/09) ⇒ page 221
- ❑ Removing and installing (up to model year 2005) ⇒ page 229
- ❑ Removing and installing (from model year 2006 onwards) ⇒ page 231

7 - Data bus diagnostic interface -J533-

- ❑ Behind glove box

Protected by copyright. Copying for private or commercial purposes, in part or in whole, is not permitted unless authorised by AUDI AG. AUDI AG does not guarantee or accept any liability with respect to the correctness of information in this document. Copyright by AUDI AG.

- ❑ Pin assignment ⇒ page 15
- ❑ Removing and installing ⇒ page 22

8 - Control unit for front display and information control panel -J523-

- ❑ Behind glove box
- ❑ Pin assignment (up to model year 2007) ⇒ page 9
- ❑ Removing and installing ⇒ page 19

9 - Digital sound package control unit -J525-

- ❑ Behind luggage compartment side trim (left-side)
- ❑ Pin assignment (BOSE) ⇒ page 74
- ❑ Removing and installing (BOSE) (up to model year 2005) ⇒ page 102
- ❑ Removing and installing (BOSE) (from model year 2006 onwards) ⇒ page 104
- ❑ Pin assignment (BOSE 6000) ⇒ page 75
- ❑ Removing and installing (BOSE 6000) ⇒ page 105
- ❑ Pin assignment (Bang & Olufsen) ⇒ page 77
- ❑ Removing and installing (Bang & Olufsen) ⇒ page 106

10 - Navigation system with CD drive control unit -J401-

- ❑ Behind luggage compartment side trim (left-side)
- ❑ Pin assignment (up to model year 2007) ⇒ page 208
- ❑ Removing and installing ⇒ page 201

11 - Display and operating unit changeover unit -J728-

- ❑ In front of front left seat beneath floor covering
- ❑ Pin assignment ⇒ page 56
- ❑ Removing and installing ⇒ page 60

12 - Multimedia system operating unit -E380-

- ❑ In centre console (bottom)
- ❑ Pin assignment ⇒ page 14
- ❑ Removing and installing ⇒ page 26

13 - Display unit for front information display and operating unit control unit -J685-

- ❑ Display
- ❑ In dash panel (centre)
- ❑ Removing and installing ⇒ page 23

14 - Control unit in dash panel insert -J285-

- ❑ Instrument cluster
- ❑ In dash panel
- ❑ Pin assignment ⇒ Electrical system; Rep. Gr. 90
- ❑ Removing and installing ⇒ Electrical system; Rep. Gr. 90

Protected by copyright. Copying for private or commercial purposes, in part or in whole, is not permitted unless authorised by AUDI AG. AUDI AG does not guarantee or accept any liability with respect to the correctness of information in this document. Copyright by AUDI AG.

3.4 MMI (from model year 2008 onwards, up to week 21/09) - layout

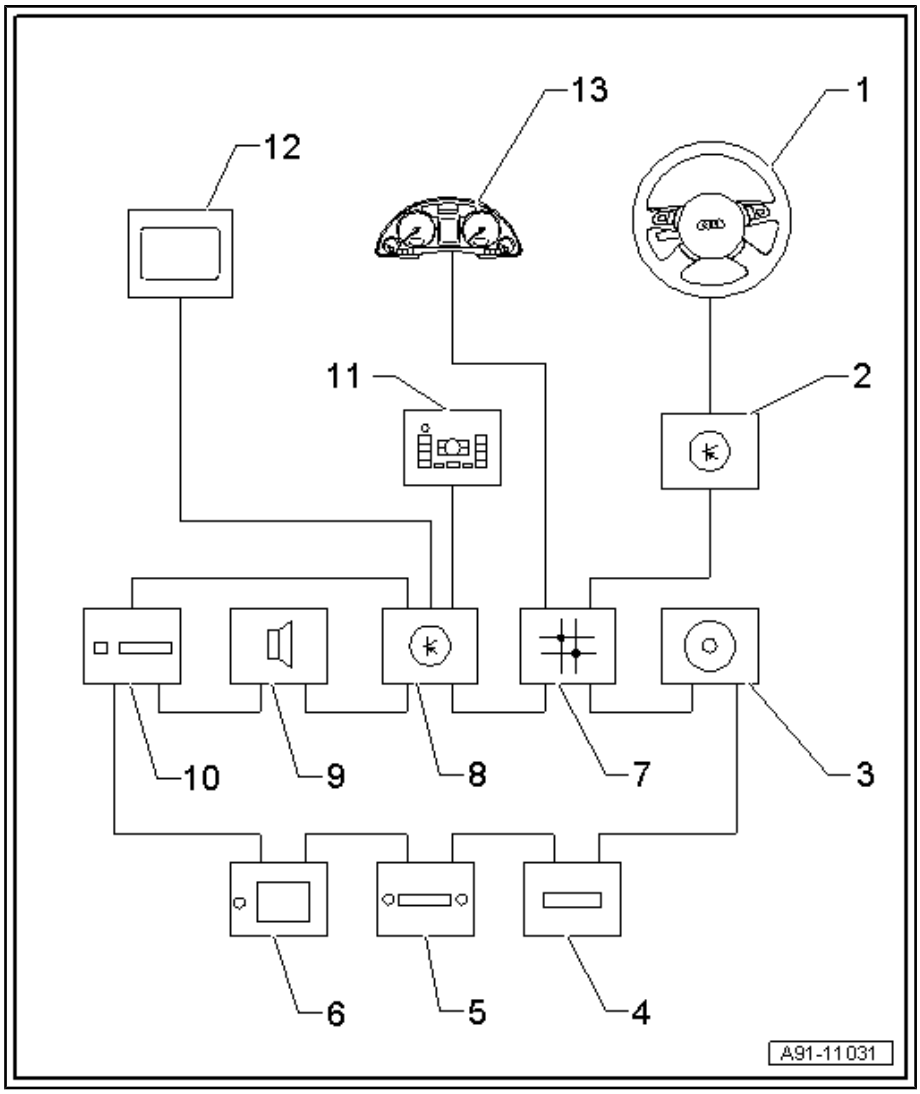

1 - Multi-function steering wheel

- ❑ Removing and installing buttons ⇒ page 255

2 - Steering column electronics control unit -J527-

- ❑ On steering column at steering column switch
- ❑ Pin assignment ⇒ Electrical system; Rep. Gr. 94
- ❑ Removing and installing ⇒ Electrical system; Rep. Gr. 94

3 - Media player in position 1 - R118-

- ❑ In glove box

MiniDisc player -R153-

- ❑ Pin assignment ⇒ page 56
- ❑ Removing and installing ⇒ page 61

Connection for external audio sources -R199- (AMI)

- ❑ Pin assignment ⇒ page 82
- ❑ Removing and installing ⇒ page 117

4 - Media player in position 2 - R119-

- ❑ In glove box

CD changer -R41-

- ❑ Pin assignment ⇒ page 80
- ❑ Removing and installing ⇒ page 116

CD player -R89-

- ❑ Pin assignment ⇒ page 80
- ❑ Removing and installing ⇒ page 116

5 - Radio -R-

- ❑ Behind luggage compartment side trim (left-side)
- ❑ Pin assignment (up to week 35/08) ⇒ page 70
- ❑ Removing and installing (from model year 2006 onwards) ⇒ page 110

6 - TV tuner -R78-

- ❑ Behind luggage compartment side trim (left-side)
- ❑ Pin assignment (up to week 21/09) ⇒ page 243
- ❑ Removing and installing (from model year 2006 onwards) ⇒ page 231

7 - Data bus diagnostic interface -J533-

- ❑ Behind glove box
- ❑ Pin assignment ⇒ page 15
- ❑ Removing and installing ⇒ page 22

Protected by copyright. Copying for private or commercial purposes, in part or in whole, is not permitted unless authorised by AUDI AG. AUDI AG does not guarantee or accept any liability with respect to the correctness of information in this document. Copyright by AUDI AG.

8 - Control unit for front display and information control panel -J523-

- ❑ Behind glove box
- ❑ Pin assignment (from model year 2008 onwards) ⇒ page 51
- ❑ Removing and installing ⇒ page 19

9 - Digital sound package control unit -J525-

- ❑ Behind luggage compartment side trim (left-side)
- ❑ Pin assignment (BOSE 6000) ⇒ page 75
- ❑ Removing and installing (BOSE 6000) ⇒ page 105
- ❑ Pin assignment (Bang & Olufsen) ⇒ page 77
- ❑ Removing and installing (Bang & Olufsen) ⇒ page 106

10 - Navigation system with CD drive control unit -J401-

- ❑ Behind luggage compartment side trim (left-side)
- ❑ Pin assignment (from model year 2008 onwards) ⇒ page 209
- ❑ Removing and installing ⇒ page 201

11 - Multimedia system operating unit -E380-

- ❑ In centre console (bottom)
- ❑ Pin assignment ⇒ page 14
- ❑ Removing and installing ⇒ page 26

12 - Display unit for front information display and operating unit control unit -J685-

- ❑ Display
- ❑ In dash panel (centre)
- ❑ Removing and installing ⇒ page 23

13 - Control unit in dash panel insert -J285-

- ❑ Instrument cluster
- ❑ In dash panel
- ❑ Pin assignment ⇒ Electrical system; Rep. Gr. 90
- ❑ Removing and installing ⇒ Electrical system; Rep. Gr. 90

Protected by copyright. Copying for private or commercial purposes, in part or in whole, is not permitted unless authorised by AUDI AG. AUDI AG does not guarantee or accept any liability with respect to the correctness of information in this document. Copyright by AUDI AG.

3.5 Connectors for MMI (from model year 2008 onwards, up to week 21/09)

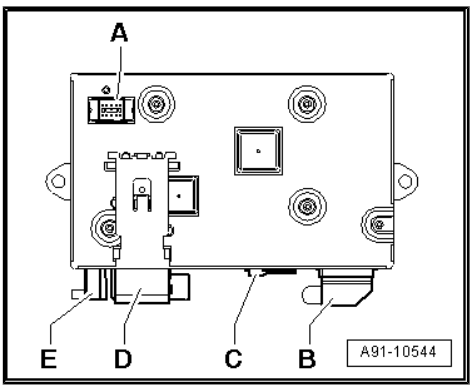

Control unit for front display and information control panel -J523-

A - Multi-pin connector, 10-pin, black, LVDS wire to navigation system with CD drive control unit -J401-

B - Multi-pin connector, 20-pin, red, to multimedia system operating unit -E380-

C - MOST bus

D - Multi-pin connector, 22-pin, black (T22b) to display unit for front information display and operating unit control unit -J685-

E - FBAS input (green) from TV tuner -R78- / reversing camera system control unit -J772-

A - Multi-pin connector, 10-pin, black

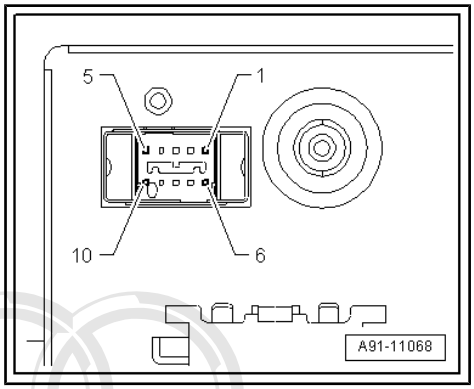

All pins are connected to the navigation system with CD drive control unit -J401- .

1 - Rx0 (+)

2 - Rx0 (–)

3 - Earth

4 - CLK (+)

5 - CLK (–)

6 - Rx1 (+)

7 - Rx1 (–)

8 - Earth

9 - Rx2 (–)

10 - Rx2 (+)

B - Multi-pin connector, 20-pin, red

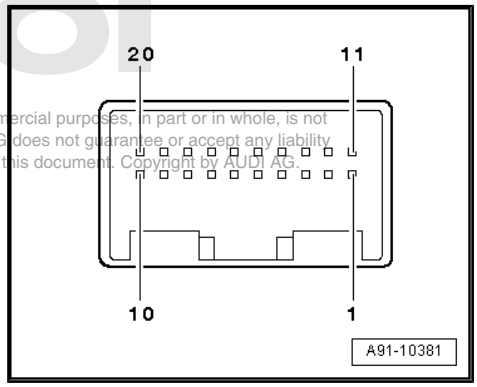

1 - Terminal 30

2 - Terminal 31

3 - Open circuit diagnostic lead

6 - Wake-up to multimedia system operating unit -E380-

7 - Voltage supply to multimedia system operating unit -E380-

8 - Earth to multimedia system operating unit -E380-

11 - CAN Bus High (Infotainment)

12 - CAN Bus Low (Infotainment)

13 - RESET from multimedia system operating unit -E380-

14 - RESET to multimedia system operating unit -E380-

15 - Data to multimedia system operating unit -E380-

16 - Data from multimedia system operating unit -E380-

20 - NF mute (low frequency) from telephone transmitter and receiver unit -R36-

Protected by copyright. Copying for private or commercial purposes, in part or in whole, is not permitted unless authorised by AUDI AG. AUDI AG does not guarantee or accept any liability with respect to the correctness of information in this document. Copyright by AUDI AG.

C - MOST bus

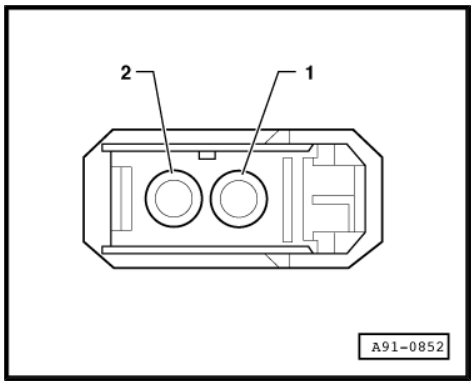

1 - Input

2 - Output

3.6 Connectors for MMI (from week 22/09 onwards)

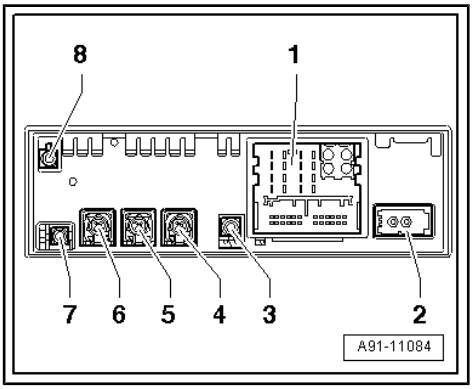

Control unit 1 for information electronics -J794-

1 - Connection block with four multi-pin connectors

2 - MOST bus

3 - FBAS input (green) from TV tuner -R78-

4 - Multi-pin connector, 4-pin, grey (T4bd) to display unit for front information display and operating unit control unit -J685-

5 - Multi-pin connector, 4-pin, yellow (T4bc) to connection for external audio sources -R199-

6 - Not used

7 - GPS connection from roof aerial -R216-

8 - Not used

Note

Contacts which are not listed are not used.

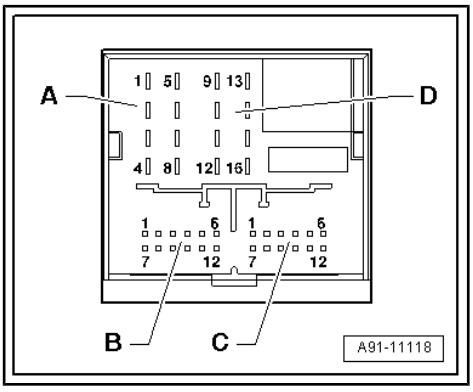

A - Multi-pin connector, 8-pin, brown (T8z)

1 - Not used

2 - Voltage supply to multimedia system operating unit -E380-

3 - Wake-up to multimedia system operating unit -E380-

4 - Not used

5 - Switch-on signal from chip card reader control unit -J676-

6 - Not used

7 - Res MU to multimedia system operating unit -E380-

8 - Open circuit diagnostic lead

Protected by copyright. Copying for private or commercial purposes, in part or in whole, is not permitted unless authorised by AUDI AG. AUDI AG does not guarantee or accept any liability with respect to the correctness of information in this document. Copyright by AUDI AG.

B - Multi-pin connector, 12-pin, blue (T12y)

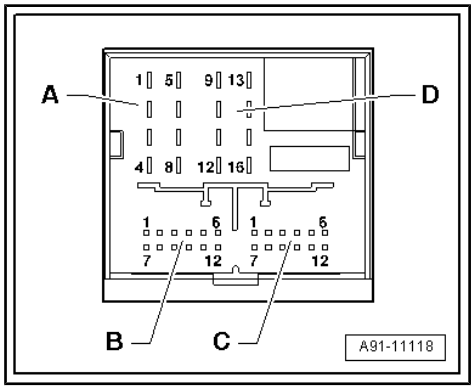

Left-hand drive vehicle

1 - Not used

2 - Microphone input (+) from microphone unit in front roof module -R164- (front right microphone -R141-)

3 - Microphone input (–) from microphone unit in front roof module -R164- (front right microphone -R141-)

4 - Data VICS to chip card reader control unit -J676-

5 - FBAS wire (–) from reversing camera system control unit -J772-

6 - Data ETC to chip card reader control unit -J676-

7 - Not used

8 - Microphone input (+) from microphone unit in front roof module -R164- (front left microphone -R140-)

9 - Microphone input (–) from microphone unit in front roof module -R164- (front left microphone -R140-)

10 - Data VICS from chip card reader control unit -J676-

11 - FBAS wire (+) from reversing camera system control unit -J772-

12 - Data ETC from chip card reader control unit -J676-

Right-hand drive vehicle

1 - Not used

2 - Microphone input (+) from microphone unit in front roof module -R164- (front left microphone -R140-)

3 - Microphone input (–) from microphone unit in front roof module -R164- (front left microphone -R140-)

4 - Data VICS to chip card reader control unit -J676-

5 - FBAS wire (–) from reversing camera system control unit -J772-

6 - Data ETC to chip card reader control unit -J676-

7 - Not used

8 - Microphone input (+) from microphone unit in front roof module -R164- (front right microphone -R141-)

9 - Microphone input (–) from microphone unit in front roof module -R164- (front right microphone -R141-)

10 - Data VICS from chip card reader control unit -J676-

11 - FBAS wire (+) from reversing camera system control unit -J772-

12 - Data ETC from chip card reader control unit -J676-

Protected by copyright. Copying for private or commercial purposes, in part or in whole, is not allowed unless authorised by AUDI AG. AUDI AG does not guarantee or accept any liability with respect to the correctness of information in this document. Copyright by AUDI AG.

C - Multi-pin connector, 12-pin, green (T12z)

All pins are connected to the connection for external audio sources -R199- .

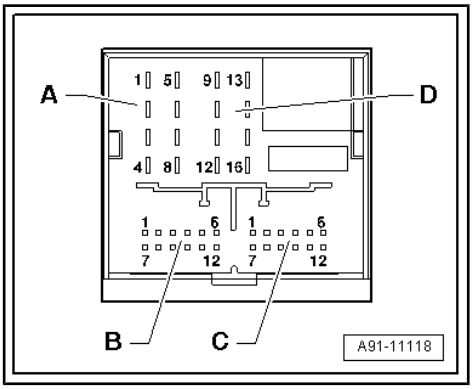

1 - NF in, earth (low frequency)

2 - NF in, right-side (low frequency)

3 - USB (+5V)

4 - USB (earth)

5 - Not used

6 - Detect

7 - NF in, left-side (low frequency)

8 - NF in, screen earth (low frequency)

9 - FBAS wire (+)

10 - FBAS wire (–)

11 - iPod data

12 - iPod data

D - Multi-pin connector, 8-pin, black (T8)

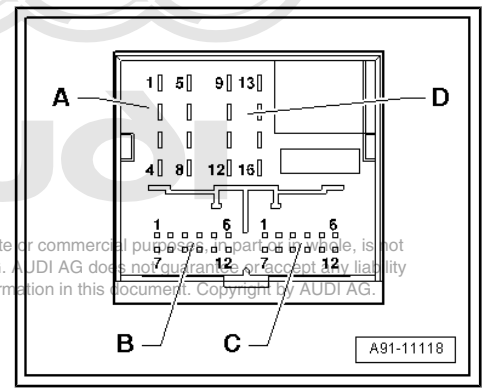

10 - Data from multimedia system operating unit -E380-

11 - Data to multimedia system operating unit -E380-

12 - Terminal 31

14 - Res BT from multimedia system operating unit -E380-

15 - Terminal 30

16 - Earth to multimedia system operating unit -E380-

Protected by copyright. Copying for private or commercial purposes, in part or in whole, is not permitted unless authorised by AUDI AG. AUDI AG does not guarantee or accept any liability with respect to the correctness of information in this document. Copyright by AUDI AG.

2 - MOST bus

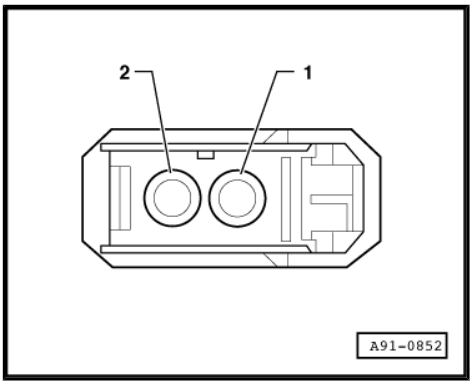

1 - Input

2 - Output

4 - Multi-pin connector, 4-pin, grey (T4bd)

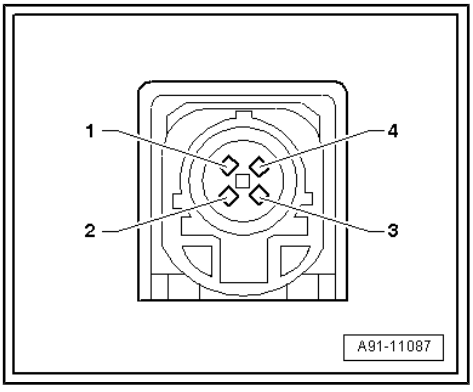

All pins are connected to the display unit for front information display and operating unit control unit -J685- .

1 - LVDS (–)

2 - LIN

3 - LVDS (+)

4 - Earth

5 - Multi-pin connector, 4-pin, yellow (T4bc)

All pins are connected to the connection for external audio sources -R199- .

1 - D (+)

2 - iPod detected

3 - D (–)

4 - Earth

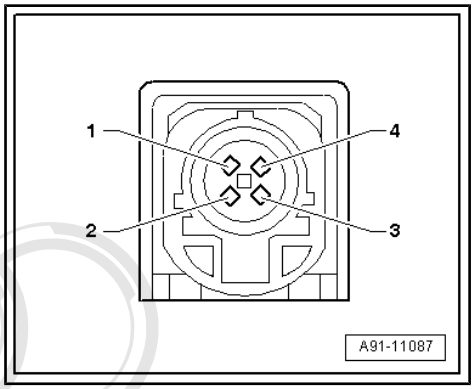

3.7 Connectors on display and operating unit changeover unit -J728- (up to model year 2007)

Note

Contacts which are not listed are not used.

Protected by copyright. Copying for private or commercial purposes, in part or in whole, is not permitted unless authorised by AUDI AG. AUDI AG does not guarantee or accept any liability with respect to the correctness of information in this document. Copyright by AUDI AG.

Display and operating unit changeover unit -J728-

A - Multi-pin connector, 22-pin, black (T22c) to display unit for front information display and operating unit control unit -J685-

B - Multi-pin connector, 22-pin, black (T22d) from navigation system with CD drive control unit -J401-

C - Multi-pin connector, 22-pin, black (T22e) from control unit for front display and information control panel -J523-

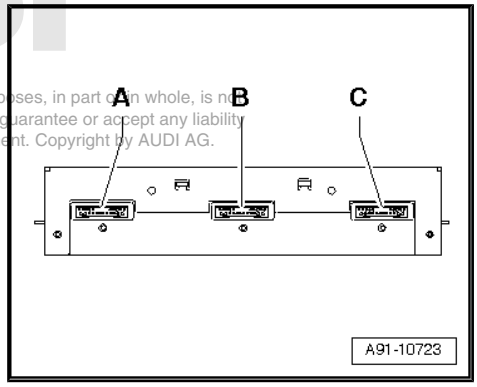

3.8 Connectors on MiniDisc player -R153-

MiniDisc player -R153-

A - Multi-pin connector, 8-pin, black

B - MOST bus

Note

Contacts which are not listed are not used.

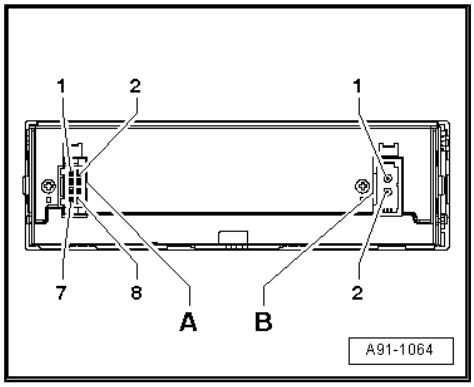

A - Multi-pin connector, 8-pin, black

1 - Terminal 31

2 - Terminal 30

5 - Open circuit diagnostic lead

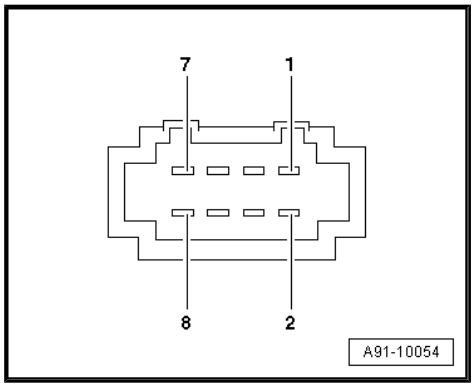

B - MOST bus

1 - Input

2 - Output

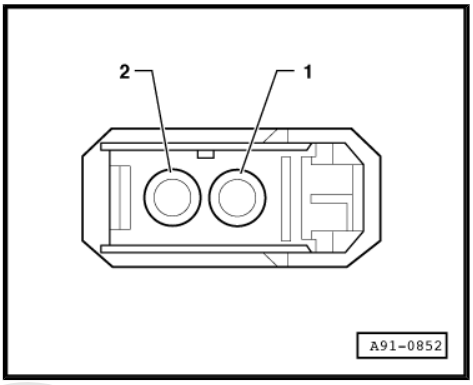

3.9 Microphone unit in front roof module -R164- - overview

The microphone unit in front roof module -R164- in front interior light -W1- consists of up to three microphones.

From week 22/04 onwards only two microphones are fitted.

One microphone (telephone microphone -R38-) is connected directly to the telephone transmitter and receiver unit -R36- . The other microphones are connected to the digital sound package control unit -J525- .

Microphone unit in front roof module -R164-

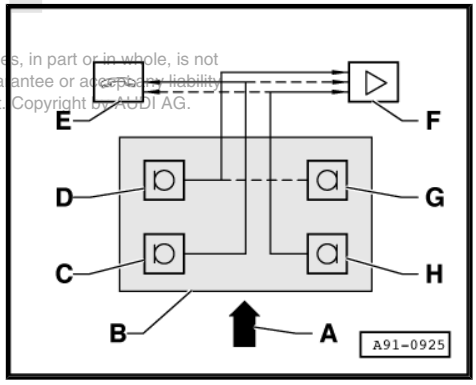

A - Direction of travel

B - Front interior light -W1-

C - Microphone 1 (black/grey) to digital sound package control unit -J525- / telephone transmitter and receiver unit -R36-

D - Microphone 2 (white) to digital sound package control unit -J525- (only on LHD vehicles) up to week 21/04

E - Telephone transmitter and receiver unit -R36-

F - Digital sound package control unit -J525-

G - Microphone 4 (red) to digital sound package control unit -J525- (only on RHD vehicles) up to week 21/04

H - Microphone 3 (blue/green) to digital sound package control unit -J525- / telephone transmitter and receiver unit -R36-

Removing and installing microphone unit in front roof module -R164- ⇒ page 168 .

Protected by copyright. Copying for private or commercial purposes, in part or in whole, is not permitted unless authorised by AUDI AG. AUDI AG does not guarantee or accept any liability with respect to the correctness of information in this document. Copyright by AUDI AG.

3.9.1 Installation tables (up to week 21/04)

Standard

Microphone	Telephone and SDS	SDS	Telephone	Without telephone and SDS
1 (3)	X	X	X	
2 (4)	X	X		
3 (1)	X			

Figures in brackets (...) apply to RHD vehicles

BOSE

Microphone	Telephone and SDS	SDS	Telephone	Without telephone and SDS
1 (3)	X	X	X	X

Microphone	Telephone and SDS	SDS	Telephone	Without telephone and SDS
2 (4)	X	X	X	
3 (1)	X			

Figures in brackets (...) apply to RHD vehicles

3.9.2 Installation tables (from week 22/04 onwards)

Standard

Microphone	Telephone and SDS	SDS	Telephone	Without telephone and SDS
1 (3)	X	X	X	
3 (1)	X			

Figures in brackets (...) apply to RHD vehicles

BOSE

Microphone	Telephone and SDS	SDS	Telephone	Without telephone and SDS
1 (3)	X	X	X	X
3 (1)	X			

Figures in brackets (...) apply to RHD vehicles

3.9.3 Microphone unit in front roof module - R164- (from week 22/09 onwards)

The microphone unit in front roof module -R164- is fitted in the front interior light -W1- . There are up to three microphones installed (depending on equipment).

Protected by copyright. Copying for private or commercial purposes, in part or in whole, is not permitted unless authorised by AUDI AG. AUDI AG does not guarantee or accept any liability with respect to the correctness of information in this document. Copyright by AUDI AG.

One of the microphones (internal microphone -R74-) is connected directly to the digital sound package control unit -J525- . The other microphones are connected to the control unit 1 for information electronics -J794- .

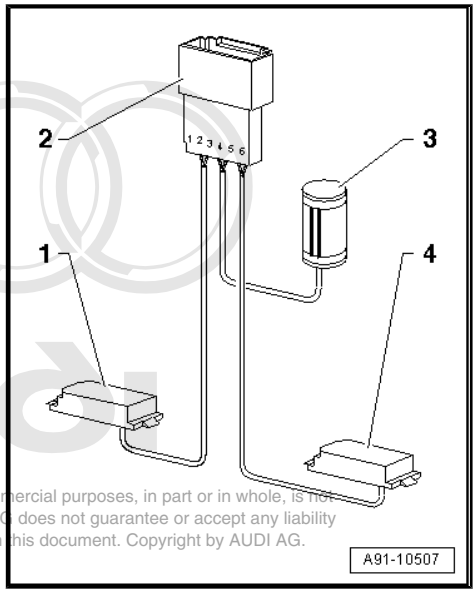

Microphone unit in front roof module -R164-

Left-hand drive vehicles:

1 - Front left microphone -R140- (black)

2 - 6-pin connector, blue (T6o), pins 1-2: front left microphone -R140- (black), pins 3-4: internal microphone -R74- (black), pins 5-6: front right microphone -R141- (blue)

3 - Internal microphone -R74- (black)

4 - Front right microphone -R141- (blue)

Right-hand drive vehicles:

1 - Front right microphone -R141- (blue)

2 - 6-pin connector, blue (T6o), pins 1-2: front right microphone -R141- (blue), pins 3-4: internal microphone -R74- (black), pins 5-6: front left microphone -R140- (black)

3 - Internal microphone -R74- (black)

4 - Front left microphone -R140- (black)

Removing and installing microphone unit in front roof module -R164- ⇒ page 168 .

Protected by copyright. Copying for private or commercial purposes, in part or in whole, is not permitted unless authorised by AUDI AG. AUDI AG does not guarantee or accept any liability with respect to the correctness of information in this document. Copyright by AUDI AG.

3.10 MMI (from week 22/09 onwards) - overview of fitting locations

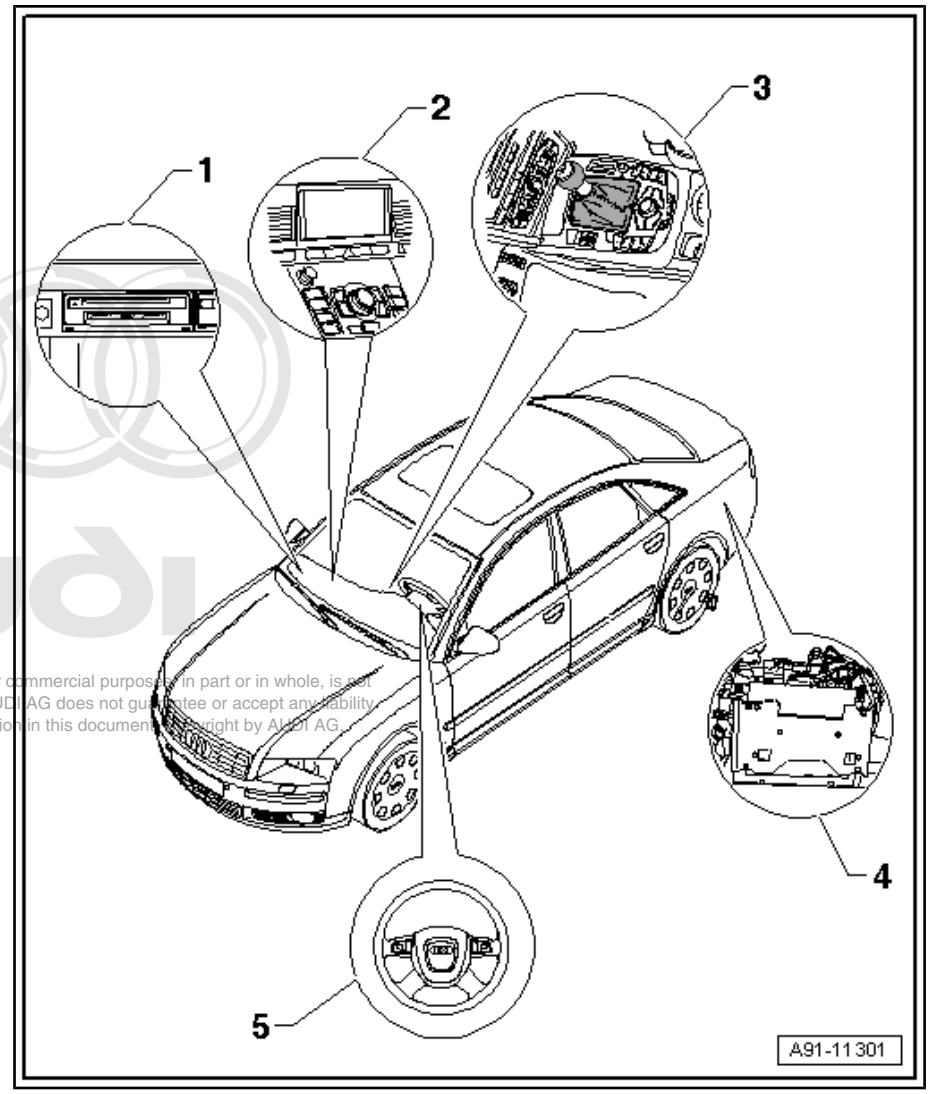

1 - Control unit 1 for information electronics -J794-

- ❑ In glove box (left-side)
- ❑ Pin assignment (from week 22/09 onwards) ⇒ page 53
- ❑ Removing and installing (from week 36/08 onwards) ⇒ page 21

- MiniDisc player -R153-

- ❑ In glove box (right-side)
- ❑ Pin assignment ⇒ page 56
- ❑ Removing and installing ⇒ page 61

2 - Display unit for front information display and operating unit control unit -J685-

- ❑ In dash panel (centre)
- ❑ Pin assignment (from week 36/08 onwards) ⇒ page 14
- ❑ Removing and installing ⇒ page 23

3 - Multimedia system operating unit -E380-

- ❑ In centre console (bottom)
- ❑ Pin assignment ⇒ page 14
- ❑ Removing and installing ⇒ page 26

4 - Radio -R-

- ❑ Behind luggage compartment side trim (left-side)
- ❑ Pin assignment (from week 36/08 onwards) ⇒ page 71
- ❑ Removing and installing (from week 36/08 onwards) ⇒ page 112

- Digital sound package control unit -J525-

- ❑ Behind luggage compartment side trim (left-side)
- ❑ Pin assignment (BOSE 6000) ⇒ page 75
- ❑ Removing and installing (BOSE 6000) ⇒ page 105
- ❑ Pin assignment (Bang & Olufsen) ⇒ page 77
- ❑ Removing and installing (Bang & Olufsen) ⇒ page 106

5 - Multi-function steering wheel

- ❑ Removing and installing buttons ⇒ page 255

Protected by copyright. Copying for private or commercial purposes, in part or in whole, is not permitted unless authorised by AUDI AG. AUDI AG does not guarantee or accept any liability with respect to the correctness of information in this document. Copyright by AUDI AG.

3.11 Removing and installing display and operating unit changeover unit -J728-

– Switch off all electrical equipment.

– Remove ignition key.

Removing

– Remove front seat (left-side) ⇒ General body repairs, interior; Rep. Gr. 72 .

– Fold back floor covering ⇒ General body repairs, interior; Rep. Gr. 70 .

– Release electronics box cover and open box -arrows-.

The display and operating unit changeover unit -J728- is only wedged in the electronics box.

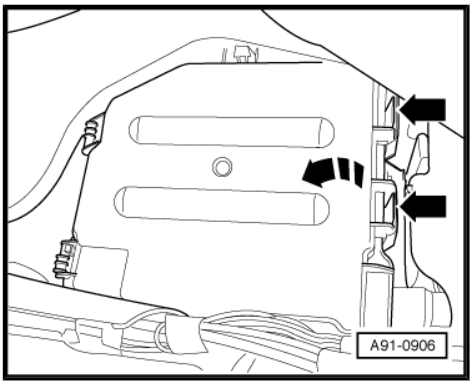

– Pry display and operating unit changeover unit -J728- -1- out of electronics box -2-.

– Unplug all connectors at display and operating unit changeover unit -J728- -1-.

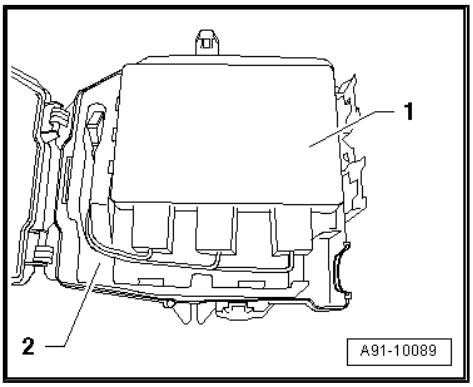

Installing

– Installation is performed in reverse sequence.

3.12 Removing and installing MiniDisc player -R153-

Special tools and workshop equipment required

♦ Radio release tool -T10057-

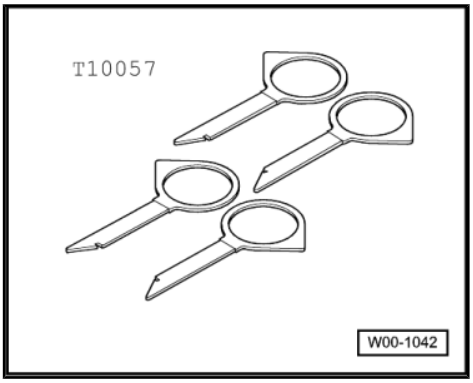

Protected by copyright. Copying for private or commercial purposes, in part or in whole, is not permitted unless authorised by AUDI AG. AUDI AG does not guarantee or accept any liability with respect to the correctness of information in this document. Copyright by AUDI AG.

♦ Repair set for fibre optic cables -VAS 6223-

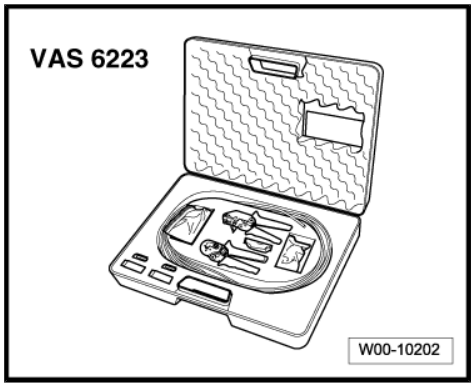

– Switch off all electrical equipment.
– Remove ignition key.

Removing

– Open glove box.
– Insert two radio release tools -T10057- into slots on MiniDisc player -R153- until they engage. Pointed ends of grips must face outwards.
– Pull MiniDisc player -R153- out of mounting frame.
– Unplug all connectors.

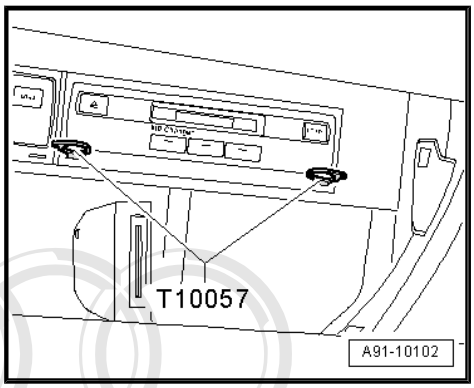

– Fit the protective cap -1- onto MOST Bus connector -2-.
– Pull radio release tool -T10057- out of MiniDisc player -R153- by pressing retaining tabs on MiniDisc player -R153- .

Installing

– Plug in connectors.
– Slide MiniDisc player -R153- into mounting frame until it engages.

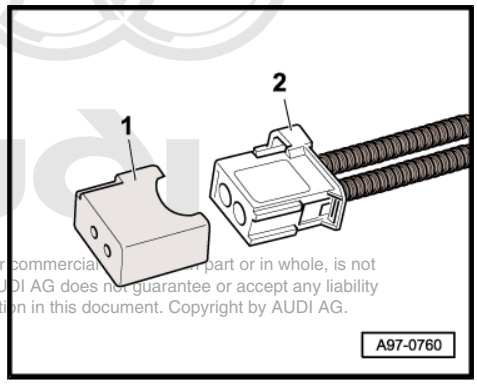

Protected by copyright. Copying for private or commercial purposes, in part or in whole, is not permitted unless authorised by AUDI AG. AUDI AG does not guarantee or accept any liability with respect to the correctness of information in this document. Copyright by AUDI AG.

4 Radio system

4.1 General notes (up to week 35/08)

The radio system is part of the MMI Infotainment system. A standard “radio set” is no longer fitted. Instead the radio -R- consists of a radio tuner with additional plug-in positions located at rear left of luggage compartment.

The multimedia system operating unit -E380- is used for operation. Data is transmitted to the digital sound package control unit -J525- via the fibre optic MOST Bus.

The signals from the rear window aerials reach the radio -R- via the aerial amplifier -R24- with integrated aerial selection control unit -J515- .

A digital radio -R147- can be fitted for areas where digital radio reception is possible.

As an option, the following may be installed in the glove box: CD changer -R41- / CD player -R89- / MiniDisc player -R153- / connection for external audio sources -R199- .

Fault finding is performed via the “Guided Fault Finding” using ⇒ Vehicle diagnosis, testing and information system VAS 5051.

Repairing aerial wiring ⇒ Electrical system; Rep. Gr. 97 .

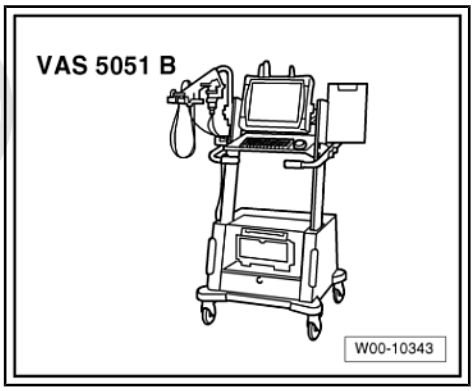

Protected by copyright. Copying for private or commercial purposes, in part or in whole, is not permitted unless authorised by AUDI AG. AUDI AG does not guarantee or accept any liability with respect to the correctness of information in this document. Copyright by AUDI AG.

4.2 General notes (from week 36/08 onwards)

The radio system is part of the third-generation MMI infotainment system, and it is linked to the control unit 1 for information electronics -J794- via the MOST bus.

The Standard sound system is directly connected to the radio -R- and, depending on the equipment version, the analogue tuner and DAB tuner are located in the radio -R- .

Sound systems:

- Standard
- BOSE
- Bang and Olufsen

Layout of radio -R- (MMI)

Depending on the equipment version, the radio -R- contains the following control units known from the second generation:

1 - Digital sound package control unit -J525-

2 - Radio -R-

3 - Radio -R- AM/FM tuner

4 - Satellite radio -R146- (USA only) not fitted

5 - Digital radio -R147-

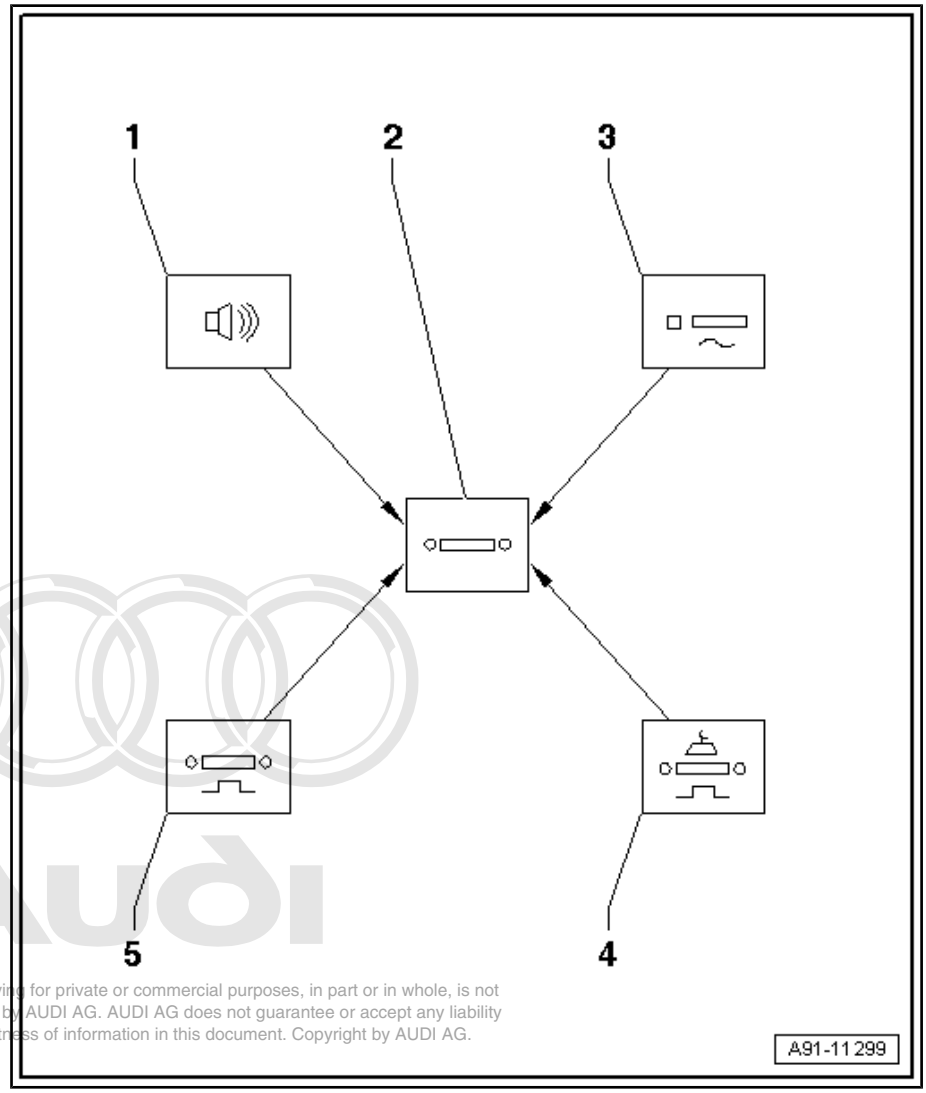

Protected by copyright. Copying for private or commercial purposes, in part or in whole, is not permitted unless authorised by AUDI AG. AUDI AG does not guarantee or accept any liability with respect to the correctness of information in this document. Copyright by AUDI AG.

4.3 Standard radio system (up to week 35/08) - layout

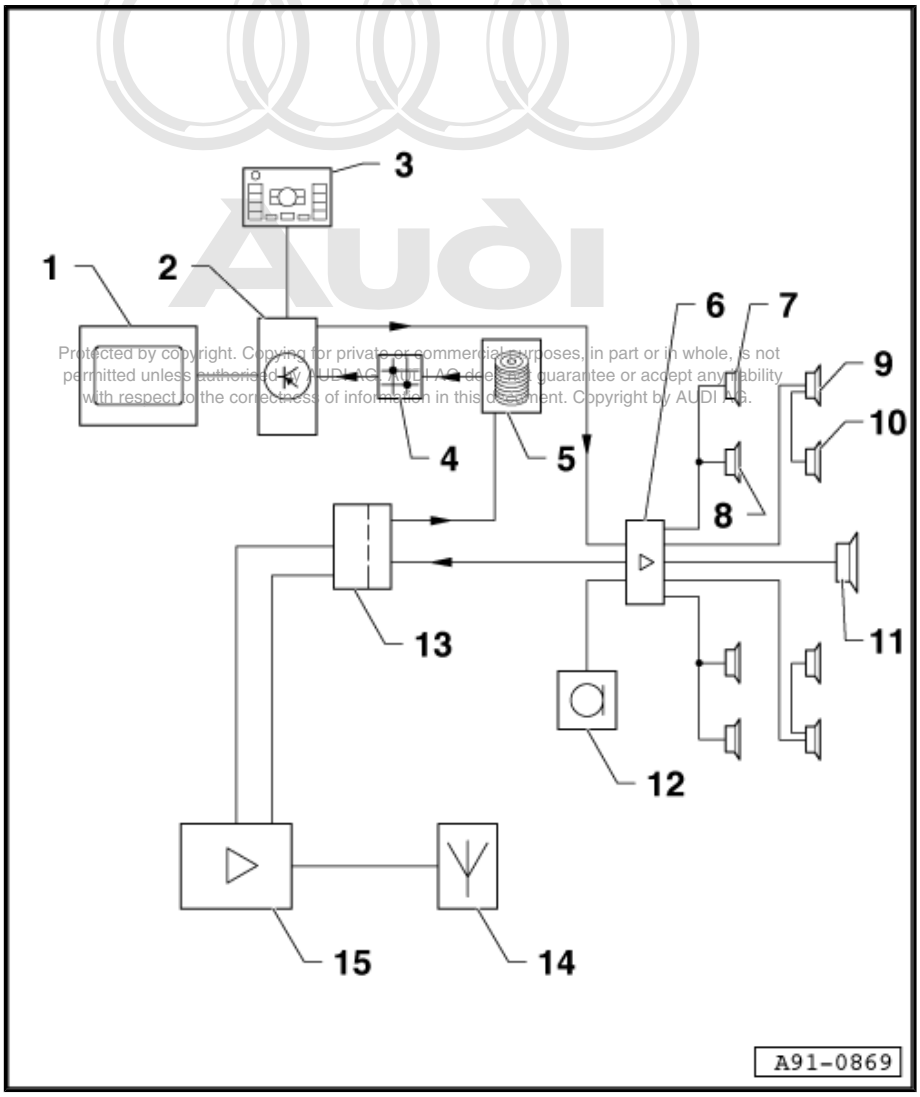

Protected by copyright. Copying for private or commercial purposes, in part or in whole, is not permitted unless authorised by AUDI AG. AUDI AG does not guarantee or accept any liability with respect to the correctness of information in this document. Copyright by AUDI AG.

1 - Display unit for front information display and operating unit control unit -J685- in dash panel (centre)

2 - Control unit for front display and information control panel -J523- behind glove box

3 - Multimedia system operating unit -E380- in centre console (bottom)

4 - Data bus diagnostic interface -J533- behind glove box

5 - Media player in position 1 -R118- / media player in position 2 -R119- in glove box

6 - Digital sound package control unit -J525- behind luggage compartment side trim (left-side)

7 - Front left treble loudspeaker -R20- / front right treble loudspeaker -R22- in dash panel (left and right)

8 - Front left mid-range and bass loudspeaker -R101- / front right mid-range and bass loudspeaker -R102- in front doors (bottom)

9 - Rear left mid-range and bass loudspeaker -R159- / rear right mid-range and bass loudspeaker -R160- in rear doors (bottom)

10 - Rear left treble loudspeaker -R14- / rear right treble loudspeaker -R16- in rear doors (top)

11 - Subwoofer in rear shelf -R157- in rear shelf (centre)

12 - Microphone unit in front roof module -R164- in front interior light -W1-

13 - Radio -R- located behind luggage compartment side trim (left-side)

14 - Rear window aerials

15 - Aerial amplifier -R24- behind roof end trim (left-side)

4.4 Standard radio system (from week 36/08 onwards) - layout

1 - Radio -R- located behind luggage compartment side trim (left-side)

2 - Front left treble loudspeaker -R20- / front right treble loudspeaker -R22- in dash panel (left and right)

3 - Front left mid-range and bass loudspeaker -R101- / front right mid-range and bass loudspeaker -R102- in front doors (bottom)

4 - Rear left treble loudspeaker -R14- / rear right treble loudspeaker -R16- in rear doors (top)

5 - Rear left mid-range and bass loudspeaker -R159- / rear right mid-range and bass loudspeaker -R160- in rear doors (bottom)

6 - Subwoofer in rear shelf -R157- in rear shelf (centre)

7 - MOST bus

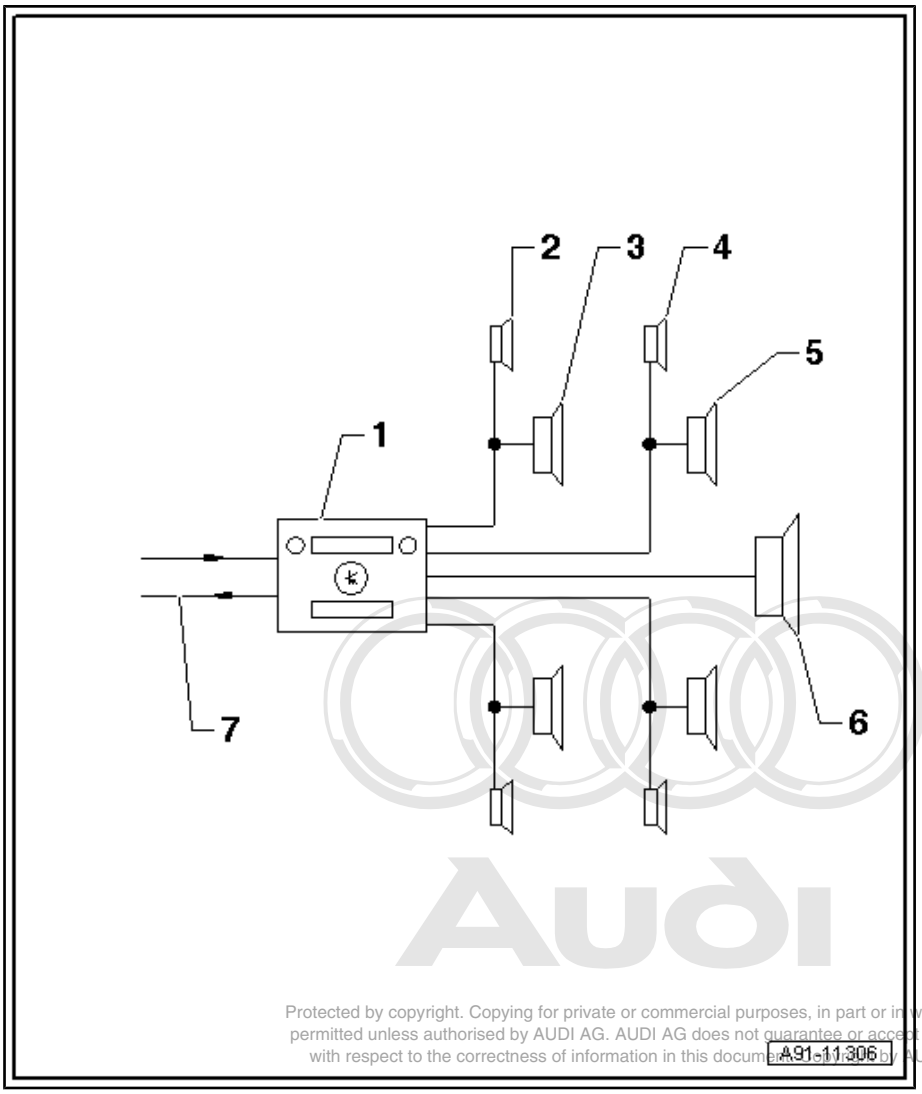

Protected by copyright. Copying for private or commercial purposes, in part or in whole, is not permitted unless authorised by AUDI AG. AUDI AG does not guarantee or accept any liability with respect to the correctness of information in this document. Copyright by AUDI AG.

4.5 BOSE/BOSE 6000 radio system (up to week 35/08) - layout

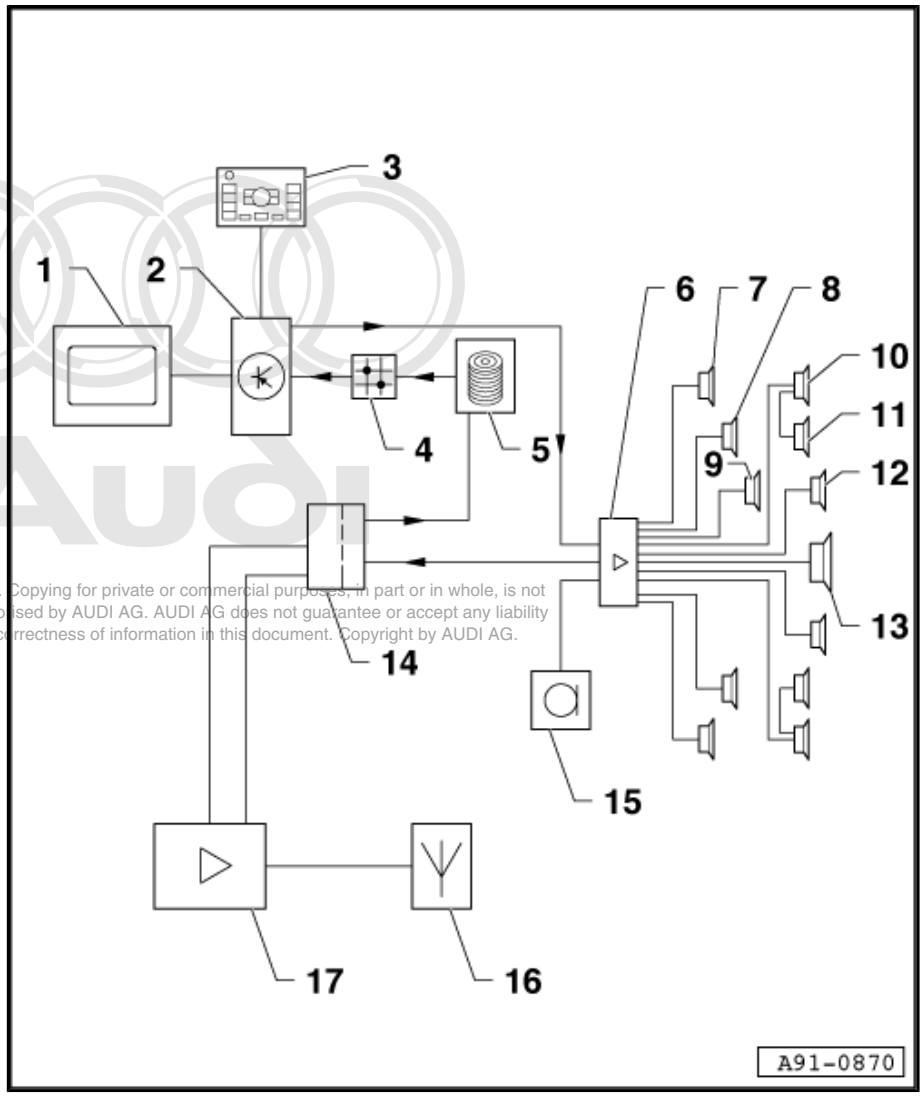

1 - Display unit for front information display and operating unit control unit -J685- in dash panel (centre)

2 - Control unit for front display and information control panel -J523- behind glove box

3 - Multimedia system operating unit -E380- in centre console (bottom)

4 - Data bus diagnostic interface -J533- behind glove box

5 - Media player in position 1 -R118- / media player in position 2 -R119- in glove box

6 - Digital sound package control unit -J525- behind luggage compartment side trim (left-side)

7 - Front left bass loudspeaker -R21- / front right bass loudspeaker -R23- in front doors (bottom)

8 - Front left mid-range and treble loudspeaker -R26- / front right mid-range and treble loudspeaker -R27- in dash panel (left and right)

9 - Centre mid-range and treble loudspeaker -R158- in dash panel (centre)

10 - Rear left mid-range and bass loudspeaker -R159- / rear right mid-range and bass loudspeaker -R160- in rear doors (bottom)

11 - Rear left treble loudspeaker -R14- / rear right treble loudspeaker -R16- in rear doors (top)

12 - Loudspeaker in rear shelf -R150- in left and right of rear shelf

13 - Subwoofer in rear shelf -R157- in rear shelf (centre)

14 - Radio -R- located behind luggage compartment side trim (left-side)

15 - Microphone unit in front roof module -R164- in front interior light -W1-

16 - Rear window aerials

17 - Aerial amplifier -R24- behind roof end trim (left-side)

Protected by copyright. Copying for private or commercial purposes, in part or in whole, is not permitted unless authorised by AUDI AG. AUDI AG does not guarantee or accept any liability with respect to the correctness of information in this document. Copyright by AUDI AG.

4.6 BOSE 6000 sound system (from week 36/08 onwards) - layout

1 - Digital sound package control unit -J525- behind luggage compartment side trim (left-side)

2 - Front left bass loudspeaker -R21- / front right bass loudspeaker -R23- in front doors (bottom)

3 - Front left mid-range and treble loudspeaker -R26- / front right mid-range and treble loudspeaker -R27- in dash panel (left and right)

4 - Rear left mid-range and bass loudspeaker -R159- / rear right mid-range and bass loudspeaker -R160- in rear doors (bottom)

5 - Rear left treble loudspeaker -R14- / rear right treble loudspeaker -R16- in rear doors (top)

6 - Loudspeaker in rear shelf -R150- in left and right of rear shelf

7 - Subwoofer in rear shelf -R157- in rear shelf (centre)

8 - Centre mid-range and treble loudspeaker -R158- in dash panel (centre)

9 - Microphone unit in front roof module -R164- in front interior light -W1-

10 - MOST bus

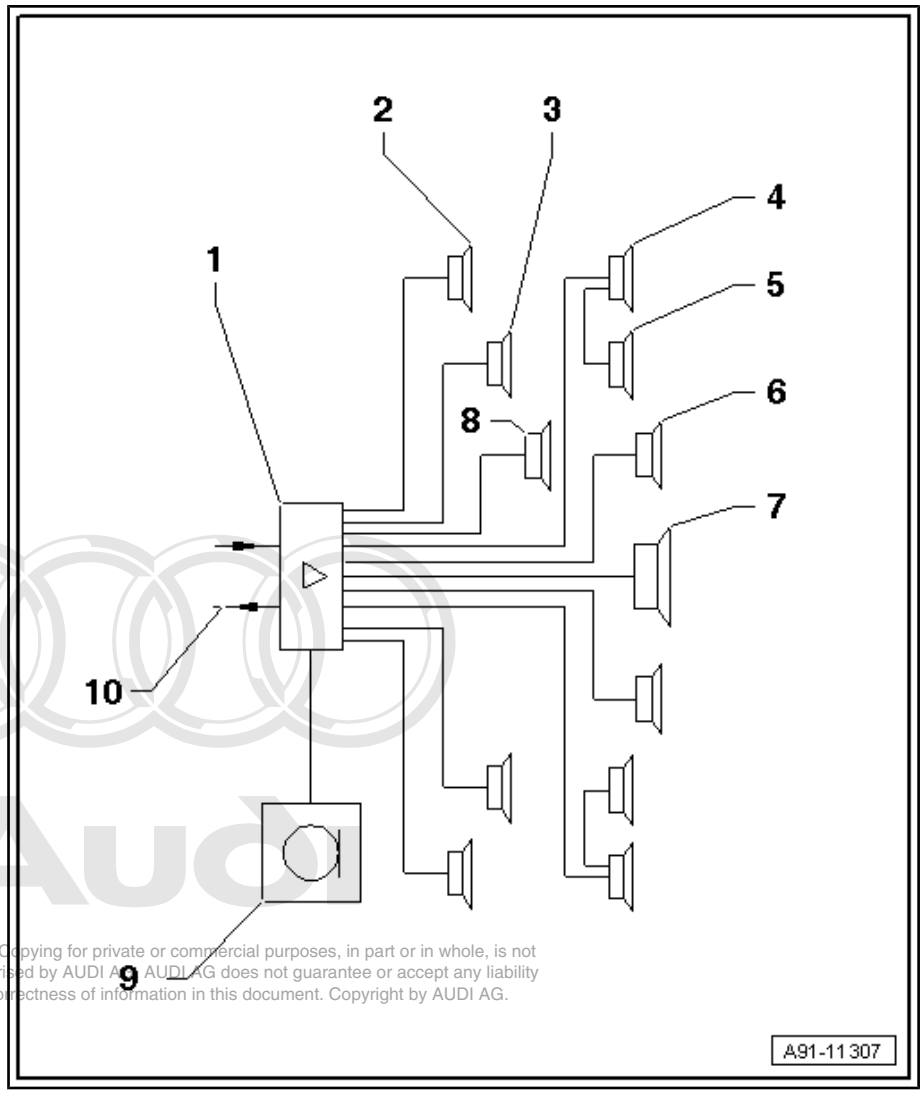

Protected by copyright. Copying for private or commercial purposes, in part or in whole, is not permitted unless authorised by AUDI AG. AUDI AG does not guarantee or accept any liability with respect to the correctness of information in this document. Copyright by AUDI AG.

4.7 Bang & Olufsen sound system - layout

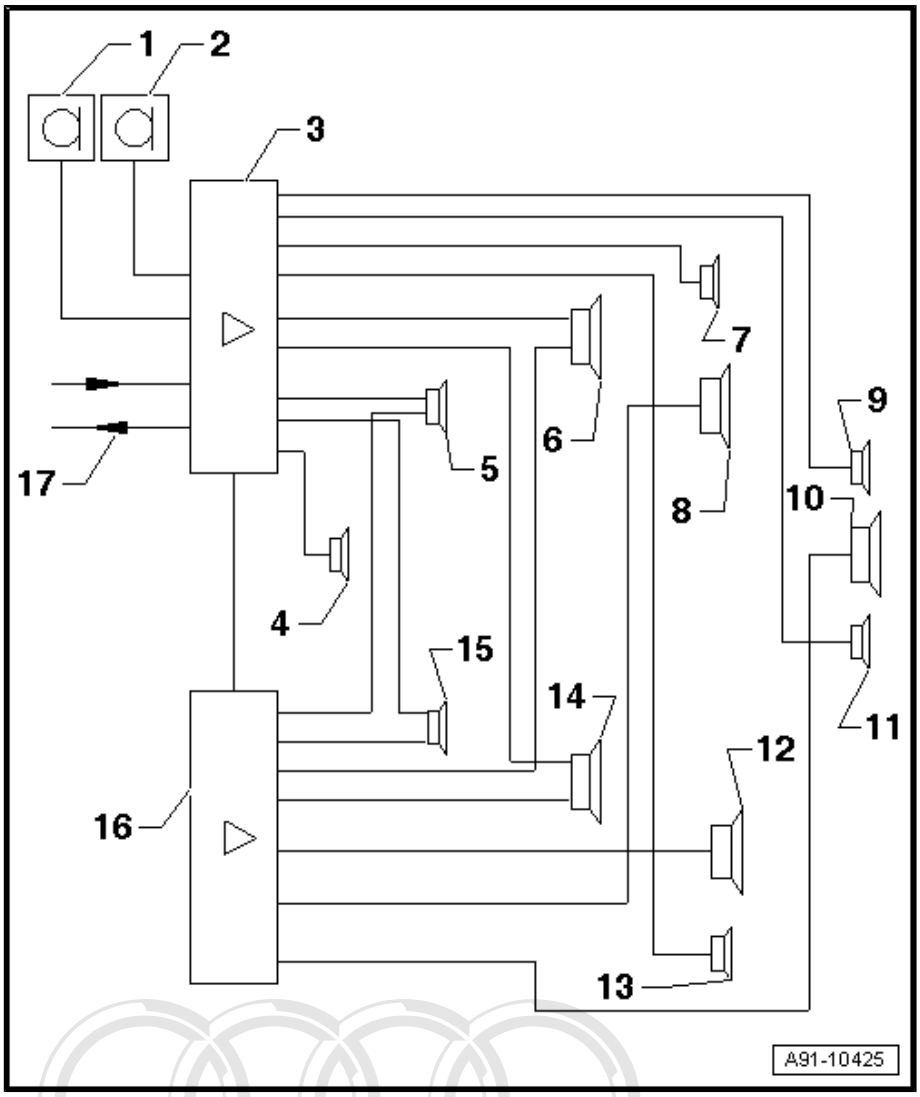

1 - Microphone unit in front roof module -R164- in front interior light -W1-

2 - Microphone unit in front roof module -R164- in front interior light -W1- (up to week 35/08)

3 - Digital sound package control unit -J525- behind luggage compartment side trim (left-side)

4 - Centre mid-range and treble loudspeaker -R158- in dash panel (centre)

5 - Front left treble loudspeaker -R20- in dash panel (left-side)

6 - Front left bass loudspeaker -R21- / front left mid-range loudspeaker -R103- in front door (bottom)

7 - Rear left treble loudspeaker -R14- in rear door (top)

8 - Rear left mid-range and bass loudspeaker -R159- in rear door (bottom)

9 - Rear left mid-range loudspeaker -R105- in rear shelf (left-side)

10 - Subwoofer in rear shelf -R157- in rear shelf (centre)

11 - Rear right mid-range loudspeaker -R106- in rear shelf (right-side)

12 - Rear right mid-range and bass loudspeaker -R160- in rear door (bottom)

13 - Rear right treble loudspeaker -R16- in rear door (top)

14 - Front right bass loudspeaker -R23- / front right mid-range loudspeaker -R104- in front door (bottom)

15 - Front right treble loudspeaker -R22- in dash panel (right-side)

16 - Digital sound package control unit 2 -J787- behind luggage compartment side trim (left-side)

17 - MOST bus

Protected by copyright. Copying for private or commercial purposes, in part or in whole, is not permitted unless authorised by AUDI AG. AUDI AG does not guarantee or accept any liability with respect to the correctness of information in this document. Copyright by AUDI AG.

4.8 Connectors on radio -R- (up to week 35/08)

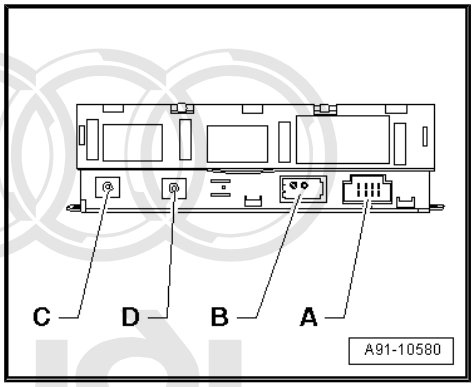

Radio -R-

A - Multi-pin connector, 8-pin, black

B - MOST bus

C - Connection HF (high frequency), white, from aerial amplifier -R24-

D - Connection ZF (intermediate frequency), yellow, to aerial amplifier -R24-

Note

Contacts which are not listed are not used.

Protected by copyright. Copying for private or commercial purposes, in part or in whole, is not permitted unless authorised by AUDI AG. AUDI AG does not guarantee or accept any liability with respect to the correctness of information in this document. Copyright by AUDI AG.

A - Multi-pin connector, 8-pin, black

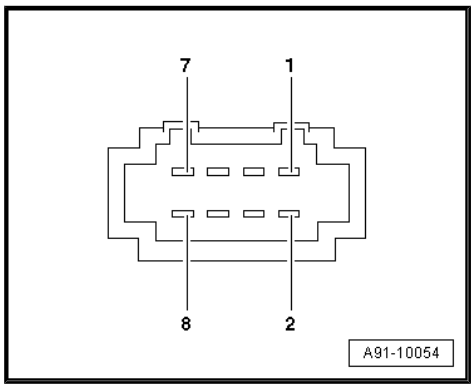

1 - Terminal 31

2 - Terminal 30

5 - Open circuit diagnostic lead

B - MOST bus

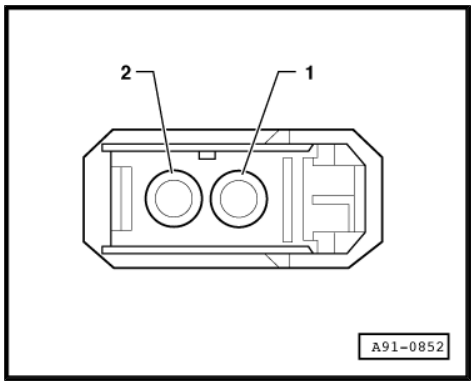

1 - Input

2 - Output

4.9 Connectors on radio -R- (from week 36/08 onwards)

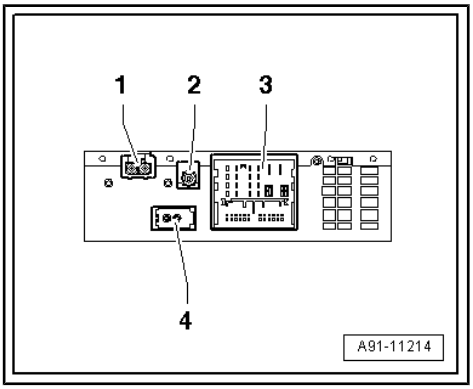

Radio -R-

1 - Connection (AM/FM1/FM2), white, from aerial amplifier -R24- / aerial amplifier 2 -R111-

2 - Connection DAB (black) from aerial amplifier 2 -R111- (Europe only)

3 - Connection block with four multi-pin connectors

4 - MOST bus

Note

Contacts which are not listed are not used.

1 - Aerial connection (AM/FM1/FM2)

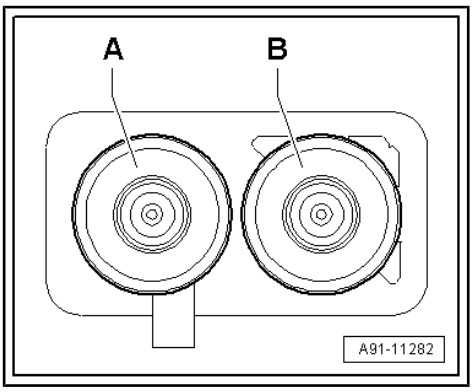

A - Contact 2 (AM/FM1) from aerial amplifier -R24- (radio aerial 2 -R93-)

B - Contact 1 (FM2) from aerial amplifier 2 -R111- (aerial -R11-)

A - Multi-pin connector, 8-pin, brown (T8ai)

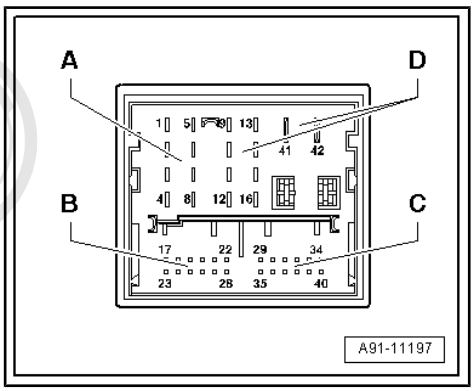

1 - Loudspeaker (+), rear right

2 - Loudspeaker (+), front right

3 - Loudspeaker (+), front left

4 - Loudspeaker (+), rear left

5 - Loudspeaker (–), rear right

6 - Loudspeaker (–), front right

7 - Loudspeaker (–), front left

8 - Loudspeaker (–), rear left

Protected by copyright. Copying for private or commercial purposes, in part or in whole, is not permitted unless authorised by AUDI AG. AUDI AG does not guarantee or accept any liability with respect to the correctness of information in this document. Copyright by AUDI AG.

B - Multi-pin connector, 12-pin

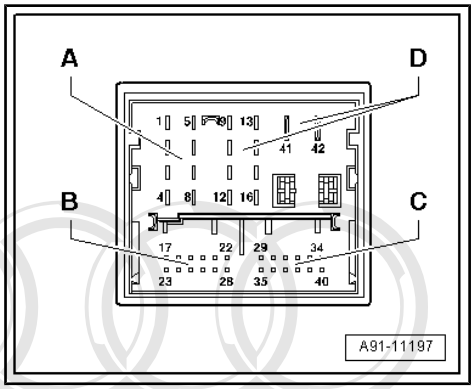

17 - NF in, left-side (low frequency)

18 - NF in, earth (low frequency)

19 - NF in, diag (low frequency)

21 - NF diag (low frequency)

22 - NF (–) (low frequency) from pre-fitted components for mobile phone installation

23 - NF in, right-side (low frequency)

24 - NF in, screen earth (low frequency)

27 - NF screen earth (low frequency)

28 - NF (+) (low frequency) from pre-fitted components for mobile phone installation

C - Multi-pin connector, 12-pin

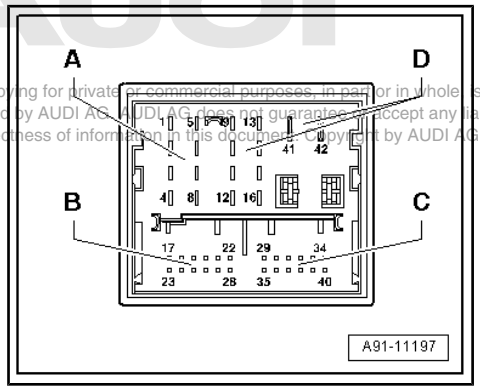

29 - Headphones output 1 (diag)

31 - Headphones output 1/2 (diag)

34 - Headphones output 2 (diag)

35 - Headphones output 1 (left)

36 - Headphones output 1 (earth)

37 - Headphones output 1 (right)

38 - Headphones output 2 (left)

39 - Headphones output 2 (earth)

40 - Headphones output 1 (right)

Protected by copyright. Copying for private or commercial purposes, in part or in whole, is not permitted unless authorised by AUDI AG. AUDI AG does not guarantee or accept any liability with respect to the correctness of information in this document. Copyright by AUDI AG.

D - Multi-pin connector, 10-pin, black (T10w)

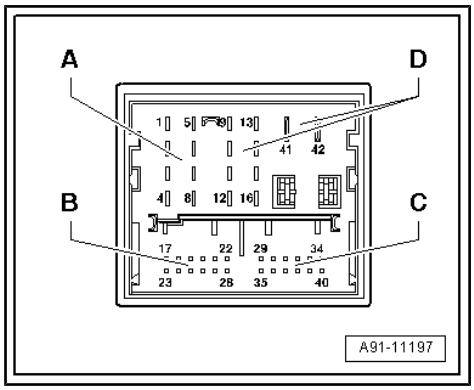

9 - Subwoofer in rear shelf -R157-

11 - Open circuit diagnostic lead

13 - Subwoofer in rear shelf -R157-

41 - Terminal 31

42 - Terminal 30

4 - MOST bus

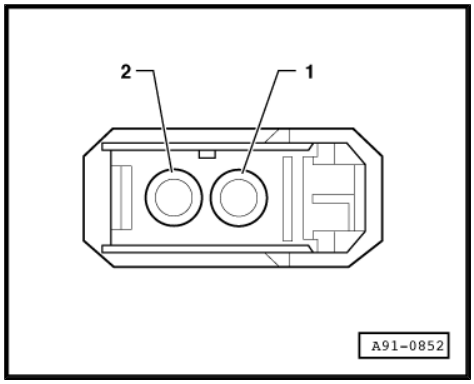

1 - Input

2 - Output

4.10 Connectors on digital sound package control unit -J525- (Standard)

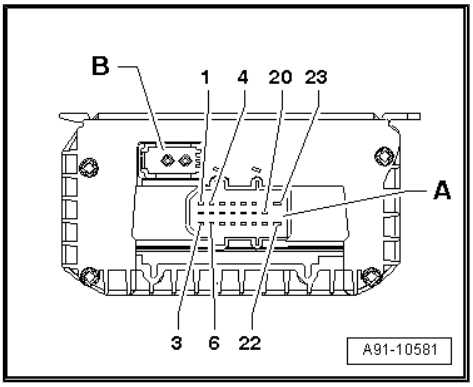

Digital sound package control unit -J525-

A - Multi-pin connector, 23-pin, blue

B - MOST bus

Note

Contacts which are not listed are not used.

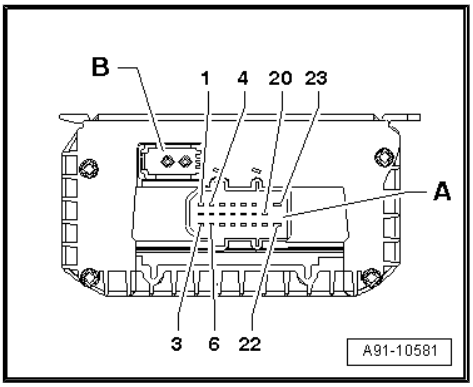

A - Multi-pin connector, 23-pin, blue

1 - Microphone 1 (–) from microphone unit in front roof module -R164-

2 - Microphone 1 (+) from microphone unit in front roof module -R164-

3 - Microphone 2 (+), NF (+) (low frequency) from Japan nav/US telematics (from week 22/04 onwards)

4 - Microphone 2 (–), NF (–) (low frequency) from Japan nav/US telematics (from week 22/04 onwards)

6 - Open circuit diagnostic lead

8 - Rear left loudspeaker (+)

9 - Rear left loudspeaker (–)

11 - Rear right loudspeaker (–)

12 - Rear right loudspeaker (+)

14 - Front left loudspeaker (+)

15 - Front left loudspeaker (–)

17 - Front right loudspeaker (–)

18 - Front right loudspeaker (+)

20 - Subwoofer in rear shelf -R157- (+)

21 - Subwoofer in rear shelf -R157- (–)

22 - Terminal 31

23 - Terminal 30

Protected by copyright. Copying for private or commercial purposes, in part or in whole, is not permitted unless authorised by AUDI AG. AUDI AG does not guarantee or accept any liability with respect to the correctness of information in this document. Copyright by AUDI AG.

B - MOST bus

1 - Input

2 - Output

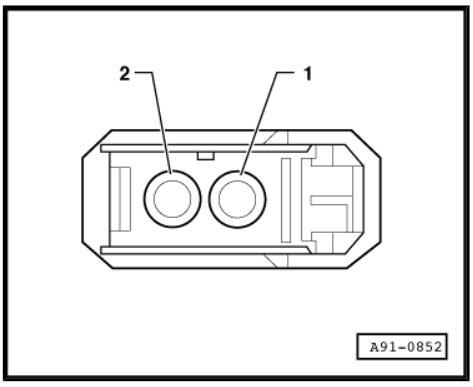

4.11 Connectors on digital sound package control unit -J525- (BOSE)

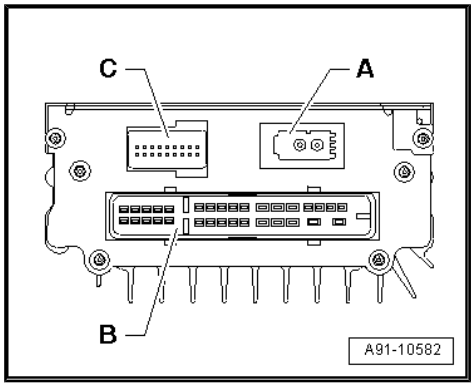

Digital sound package control unit -J525-

A - MOST bus

B - Multi-pin connector, 32-pin, black

C - Multi-pin connector, 18-pin, black

Note

Contacts which are not listed are not used.

A - MOST bus

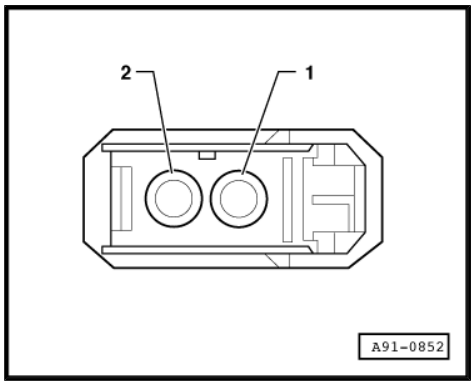

1 - Input

2 - Output

B - Multi-pin connector, 32-pin, black

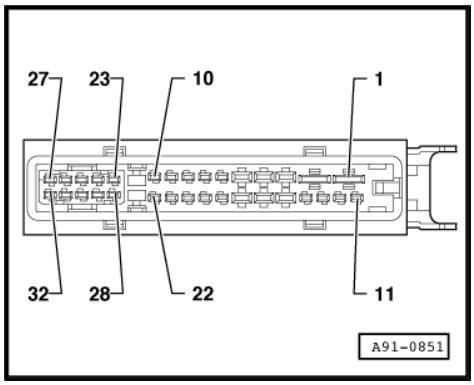

1 - Terminal 30

2 - Terminal 31

4 - Front right bass loudspeaker -R23- (+)

5 - Front left bass loudspeaker -R21- (+)

8 - Switched positive to subwoofer in rear shelf -R157-

10 - Subwoofer in rear shelf -R157- (+)

13 - Loudspeaker in rear shelf -R150- (–)

14 - Loudspeaker in rear shelf -R150- (+)

16 - Front right bass loudspeaker -R23- (–)

17 - Front left bass loudspeaker -R21- (–)

22 - Subwoofer in rear shelf -R157- (–)

23 - Centre mid-range and treble loudspeaker -R158- (+)

24 - Front right mid-range and treble loudspeaker -R27- (+)

25 - Rear left loudspeaker (+)

26 - Rear right loudspeaker (+)

27 - Front left mid-range and treble loudspeaker -R26- (+)

28 - Centre mid-range and treble loudspeaker -R158- (–)

29 - Front right mid-range and treble loudspeaker -R27- (–)

30 - Rear left loudspeaker (–)

31 - Rear right loudspeaker (–)

32 - Front left mid-range and treble loudspeaker -R26- (–)

Data stored in this Self-Study Programme is intended for training purposes, in part or in whole, is not permitted unless authorised by AUDI AG. AUDI AG does not guarantee or accept any liability with respect to the correctness of information in this document. Copyright by AUDI AG.

C - Multi-pin connector, 18-pin, black

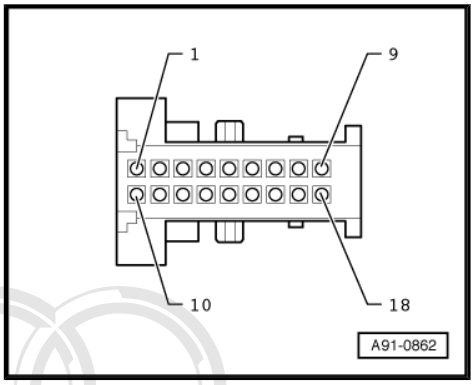

1 - Microphone 1 (+) from microphone unit in front roof module -R164-

2 - Microphone 2 (+), NF (+) (low frequency) from Japan nav/US telematics (from week 22/04 onwards)

5 - Open circuit diagnostic lead

10 - Microphone 1 (–) from microphone unit in front roof module -R164-

11 - Microphone 2 (–), NF (–) (low frequency) from Japan nav/US telematics (from week 22/04 onwards)

4.12 Connectors on digital sound package control unit -J525- (BOSE 6000)

Digital sound package control unit -J525-

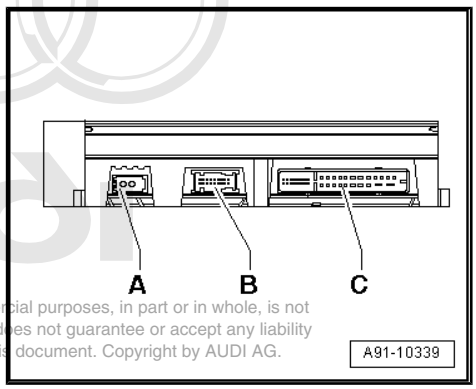

A - MOST bus

B - Multi-pin connector, 18-pin, black (T18c)

C - Multi-pin connector, 32-pin, black (T32e)

Protected by copyright. Copying for private or commercial purposes, in part or in whole, is not permitted unless authorised by AUDI AG. AUDI AG does not guarantee or accept any liability with respect to the correctness of information in this document. Copyright by AUDI AG.

Note

Contacts which are not listed are not used.

A - MOST bus

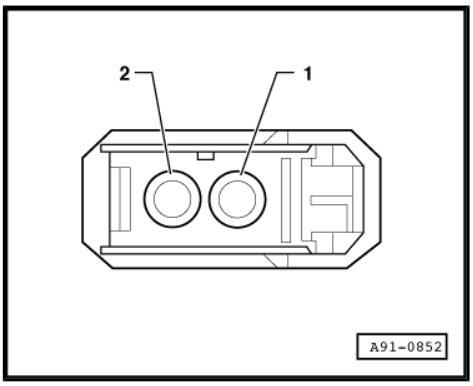

1 - Input

2 - Output

B - Multi-pin connector, 18-pin, black (T18c)

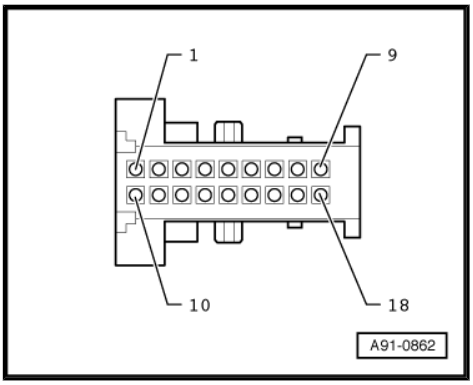

1 - Subwoofer in rear shelf -R157- (–)

2 - Switched positive to subwoofer in rear shelf -R157-

10 - Subwoofer in rear shelf -R157- (+)

C - Multi-pin connector, 32-pin, black (T32e)

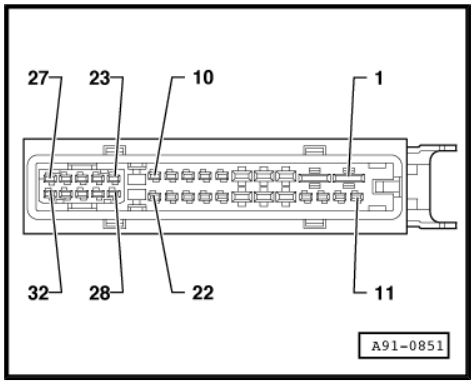

1 - Terminal 30

2 - Terminal 31

3 - Front right mid-range and treble loudspeaker -R27- (–)

4 - Front right mid-range and treble loudspeaker -R27- (+)

5 - Front left bass loudspeaker -R21- (+)

7 - Front left mid-range and treble loudspeaker -R26- (–)

8 - Front left mid-range and treble loudspeaker -R26- (+)

9 - Microphone 1 (–) from microphone unit in front roof module -R164-

10 - Microphone 1 (+) from microphone unit in front roof module -R164-

11 - Loudspeaker in rear shelf -R150- (–)

12 - Loudspeaker in rear shelf -R150- (+)

13 - Centre mid-range and treble loudspeaker -R158- (–)

14 - Centre mid-range and treble loudspeaker -R158- (+)

15 - Front right bass loudspeaker -R23- (–)

16 - Front right bass loudspeaker -R23- (+)

17 - Front left bass loudspeaker -R21- (–)

19 - Rear right loudspeaker (–)

20 - Rear right loudspeaker (+)

21 - Rear left loudspeaker (–)

22 - Rear left loudspeaker (+)

23 - Microphone 1 (screen) from microphone unit in front roof module -R164-

24 - Microphone 2 (–) from microphone unit in front roof module -R164- (up to week 35/08)

25 - Microphone 2 (+) from microphone unit in front roof module -R164- (up to week 35/08)

29 - Open circuit diagnostic lead

30 - NF (–) (low frequency) from pre-fitted components for mobile phone installation/Japan nav/China nav (up to week 35/08)

31 - NF (+) (low frequency) from pre-fitted components for mobile phone installation/Japan nav/China nav (up to week 35/08)

Protected by copyright. Copying for private or commercial purposes, in part or in whole, is not permitted unless authorised by AUDI AG. AUDI AG does not guarantee or accept any liability with respect to the correctness of information in this document. Copyright by AUDI AG.

4.13 Connectors on digital sound package control unit -J525- (Bang & Olufsen)

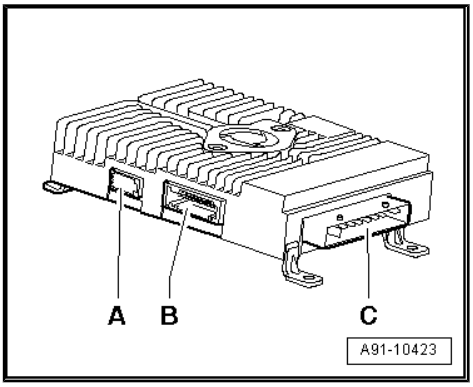

Digital sound package control unit -J525-

A - Multi-pin connector, 32-pin, black (T32e)

B - MOST bus

C - Multi-pin connector, 32-pin, black (T32f)

Note

Contacts which are not listed are not used.

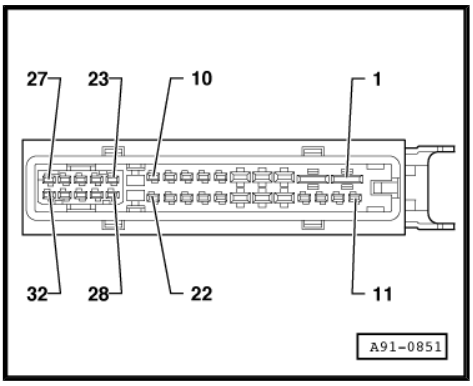

A - Multi-pin connector, 32-pin, black (T32e)

1 - Terminal 30

2 - Terminal 31

3 - Centre mid-range and treble loudspeaker -R158- (+)

4 - Front left bass loudspeaker -R21- (–)

5 - Front right bass loudspeaker -R23- (+)

6 - Front left treble loudspeaker -R20- (–)

7 - Front right treble loudspeaker -R22- (+)

8 - Rear left treble loudspeaker -R14- (–)

9 - Rear right treble loudspeaker -R16- (+)

11 - Rear left mid-range loudspeaker -R105- (+)

12 - Rear left mid-range loudspeaker -R105- (–)

13 - Rear right mid-range loudspeaker -R106- (–)

14 - Rear right mid-range loudspeaker -R106- (+)

15 - Centre mid-range and treble loudspeaker -R158- (–)

16 - Front left bass loudspeaker -R21- (+)

17 - Front right bass loudspeaker -R23- (–)

18 - Front left treble loudspeaker -R20- (+)

19 - Front right treble loudspeaker -R22- (–)

20 - Rear left treble loudspeaker -R14- (+)

21 - Rear right treble loudspeaker -R16- (–)

25 - Microphone 1 (–) from microphone unit in front roof module -R164-

26 - Microphone 2 (–) from microphone unit in front roof module -R164- (up to week 35/08)

27 - Open circuit diagnostic lead

30 - Microphone 1 (+) from microphone unit in front roof module -R164-

31 - Microphone 2 (+) from microphone unit in front roof module -R164- (up to week 35/08)

32 - Digital sound package control unit 2 -J787-

Protected by copyright. Copying for private or commercial purposes, in part or in whole, is not permitted unless authorised by AUDI AG. AUDI AG does not guarantee or accept any liability with respect to the correctness of information in this document. Copyright by AUDI AG.

B - MOST bus

1 - Input

2 - Output

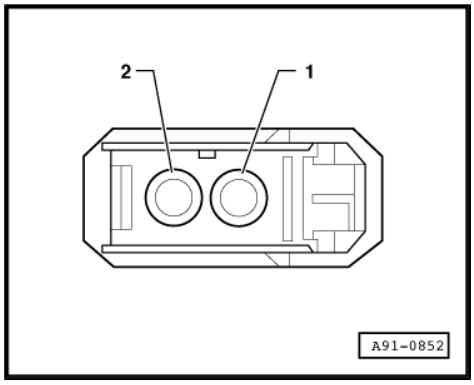

C - Multi-pin connector, 32-pin, black (T32f)

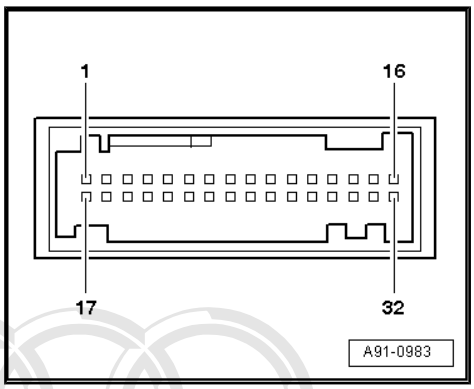

8 - NF (–) (low frequency) from pre-fitted components for mobile phone installation/Japan nav (up to week 35/08)

9 - Digital sound package control unit 2 -J787-

10 - Digital sound package control unit 2 -J787-

11 - Digital sound package control unit 2 -J787-

12 - Digital sound package control unit 2 -J787-

13 - Digital sound package control unit 2 -J787-

14 - Digital sound package control unit 2 -J787-

15 - Digital sound package control unit 2 -J787-

16 - Digital sound package control unit 2 -J787-

24 - NF (+) (low frequency) from pre-fitted components for mobile phone installation/Japan nav (up to week 35/08)

25 - Digital sound package control unit 2 -J787-

26 - Digital sound package control unit 2 -J787-

27 - Digital sound package control unit 2 -J787-

28 - Digital sound package control unit 2 -J787-

29 - Digital sound package control unit 2 -J787-

32 - Digital sound package control unit 2 -J787-

Protected by copyright. Copying for private or commercial purposes, in part or in whole, is not permitted unless authorised by AUDI AG. AUDI AG does not guarantee or accept any liability with respect to the correctness of information in this document. Copyright by AUDI AG.

4.14 Connectors on digital sound package control unit 2 -J787- (Bang & Olufsen)

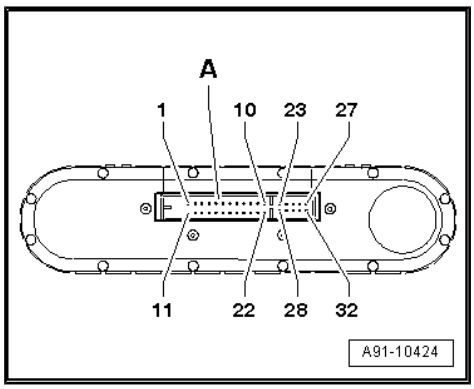

Digital sound package control unit 2 -J787-

A - Multi-pin connector, 32-pin, black (T32g)

Note

Contacts which are not listed are not used.

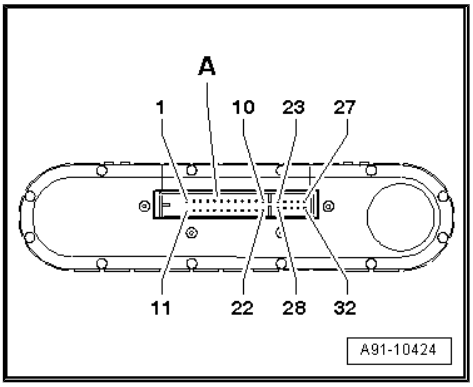

A - Multi-pin connector, 32-pin, black (T32g)

1 - Terminal 30
2 - Terminal 31
3 - Front right mid-range loudspeaker -R104- (+)
4 - Front right mid-range loudspeaker -R104- (–)
5 - Front left mid-range loudspeaker -R103- (+)
6 - Control motor for front left treble speaker -V344- (–)
7 - Control motor for front left treble speaker -V344-
8 - Digital sound package control unit -J525-
9 - Digital sound package control unit -J525-
10 - Digital sound package control unit -J525-
11 - Digital sound package control unit -J525-
12 - Digital sound package control unit -J525-
13 - Digital sound package control unit -J525-
14 - Digital sound package control unit -J525-
15 - Subwoofer in rear shelf -R157- (+)
16 - Subwoofer in rear shelf -R157- (–)
17 - Front left mid-range loudspeaker -R103- (–)
18 - Control motor for front left treble speaker -V344- (+)
19 - Control motor for front right treble speaker -V345-
20 - Digital sound package control unit -J525-
21 - Control motor for front right treble speaker -V345- (+)
22 - Control motor for front right treble speaker -V345- (–)
23 - Digital sound package control unit -J525-
24 - Digital sound package control unit -J525-
25 - Digital sound package control unit -J525-
26 - Digital sound package control unit -J525-
27 - Digital sound package control unit -J525-
28 - Rear left mid-range and bass loudspeaker -R159- (+)
29 - Rear left mid-range and bass loudspeaker -R159- (–)
30 - Digital sound package control unit -J525-
31 - Rear right mid-range and bass loudspeaker -R160- (+)
32 - Rear right mid-range and bass loudspeaker -R160- (–)

Protected by copyright. Copying for private or commercial purposes, in part or in whole, is not permitted unless authorised by AUDI AG. AUDI AG does not guarantee or accept any liability with respect to the correctness of information in this document. Copyright by AUDI AG.

4.15 Connectors on CD changer -R41-

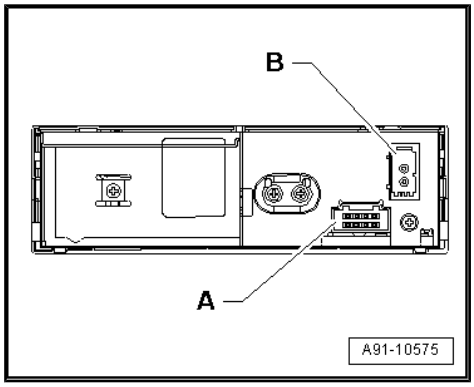

CD changer -R41-

A - Multi-pin connector, 8-pin, black (T8ak)

B - MOST bus

Note

Contacts which are not listed are not used.

A - Multi-pin connector, 8-pin, black (T8ak)

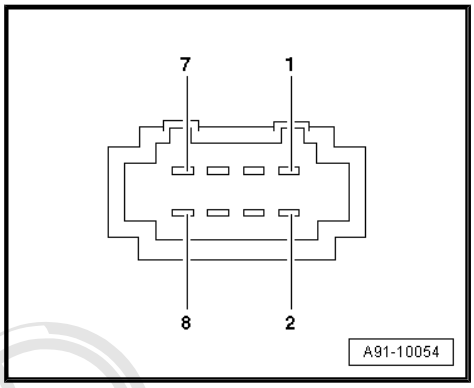

1 - Terminal 31

2 - Terminal 30

5 - Open circuit diagnostic lead

B - MOST bus

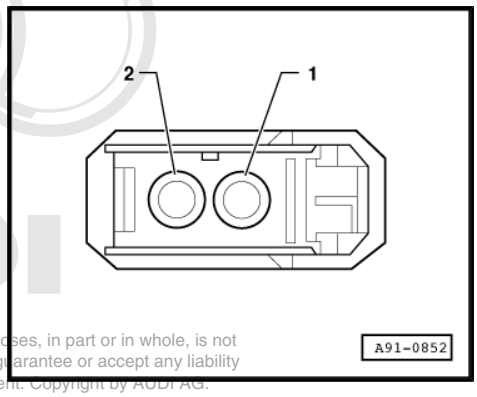

1 - Input

2 - Output

Protected by copyright. Copying for private or commercial purposes, in part or in whole, is not permitted unless authorised by AUDI AG. AUDI AG does not guarantee or accept any liability with respect to the correctness of information in this document. Copyright by AUDI AG.

4.16 Connectors on CD player -R89-

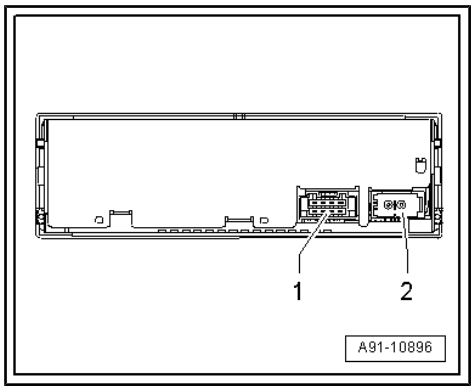

CD player -R89-

1 - Multi-pin connector, 8-pin, black

2 - MOST bus

Note

Contacts which are not listed are not used.

1 - Multi-pin connector, 8-pin, black

1 - Terminal 31

2 - Terminal 30

5 - Open circuit diagnostic lead

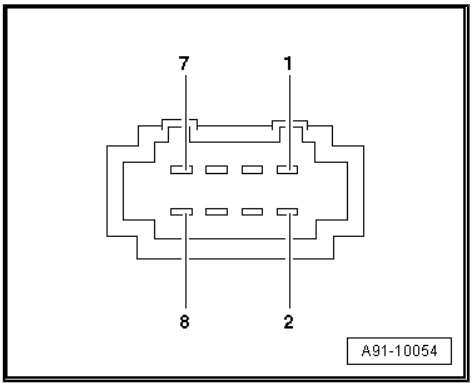

2 - MOST bus

1 - Input

2 - Output

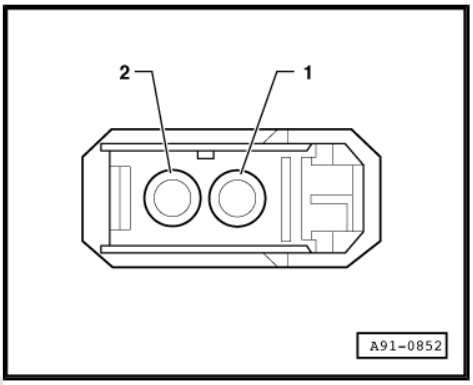

4.17 Connectors on MiniDisc player -R153-

MiniDisc player -R153-

A - Multi-pin connector, 8-pin, black

B - MOST bus

Note

Contacts which are not listed are not used.

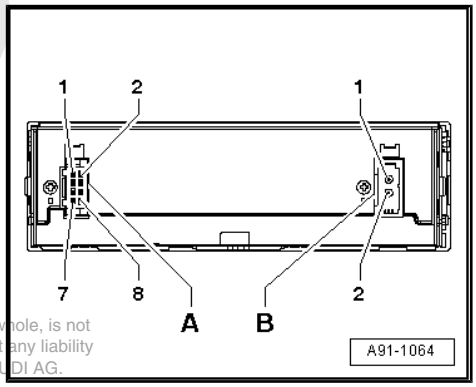

Protected by copyright. Copying for private or commercial purposes, in part or in whole, is not permitted unless authorised by AUDI AG. AUDI AG does not guarantee or accept any liability with respect to the correctness of information in this document. Copyright by AUDI AG.

A - Multi-pin connector, 8-pin, black

1 - Terminal 31

2 - Terminal 30

5 - Open circuit diagnostic lead

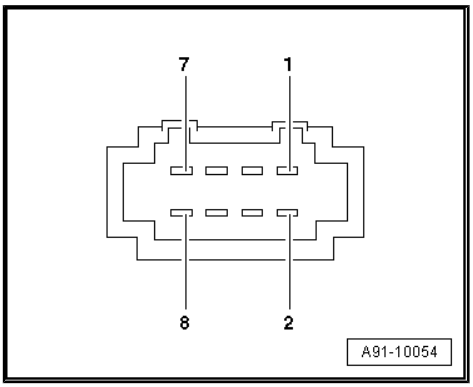

B - MOST bus

1 - Input

2 - Output

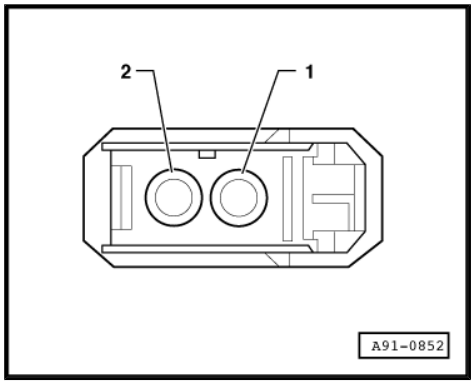

4.18 Connectors on connection for external audio sources -R199- (AMI) (up to week 35/08)

Protected by copyright. Copying for private or commercial purposes, in part or in whole, is not permitted unless authorised by AUDI AG. AUDI AG does not guarantee or accept any liability with respect to the correctness of information in this document. Copyright by AUDI AG.

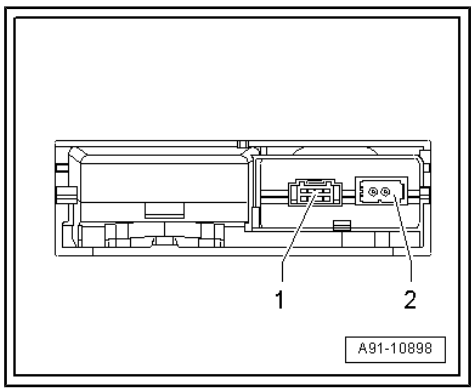

Connection for external audio sources -R199-

1 - Multi-pin connector, 8-pin, black

2 - MOST bus

Note

Contacts which are not listed are not used.

1 - Multi-pin connector, 8-pin, black

1 - Terminal 31

2 - Terminal 30

5 - Open circuit diagnostic lead

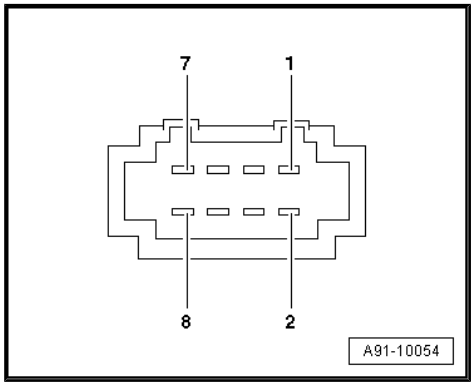

2 - MOST bus

1 - Input

2 - Output

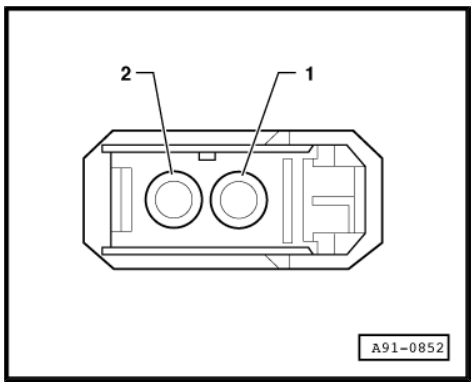

4.19 Connectors on connection for external audio sources -R199- (interface)

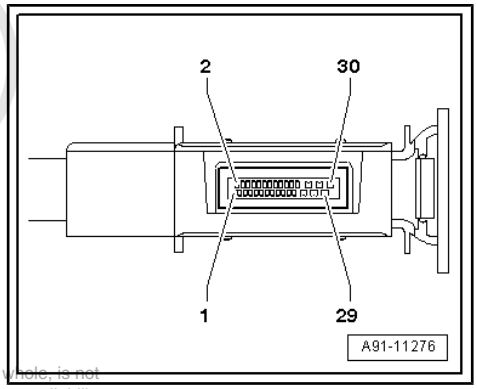

Note

Contacts which are not listed are not used.

Multi-pin connector, 30-pin

All pins are connected to the control unit 1 for information electronics -J794- .

1 - NF in, left-side (low frequency)

2 - NF in, right-side (low frequency)

3 - Low frequency earth

4 - NF in, screen earth (low frequency)

13 - iPod data

14 - iPod data

16 - iPod detected

17 - D (+)

18 - D (–)

21 - Detect

22 - Earth

24 - FBAS wire (–)

25 - USB (earth)

27 - FBAS wire (+)

28 - USB (+5V)

Protected by copyright. Copying for private or commercial purposes, in part or in whole, is not permitted unless authorised by AUDI AG. AUDI AG does not guarantee or accept any liability with respect to the correctness of information in this document. Copyright by AUDI AG.

4.20 Connectors on digital radio -R147- (up to week 35/08)

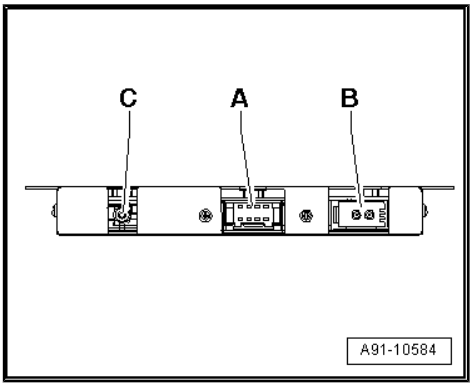

Digital radio -R147-

A - Multi-pin connector, 8-pin, black

B - MOST bus

C - Connection DAB (black) from aerial amplifier -R24-

Note

Contacts which are not listed are not used.

A - Multi-pin connector, 8-pin, black

1 - Terminal 31

2 - Terminal 30

5 - Open circuit diagnostic lead

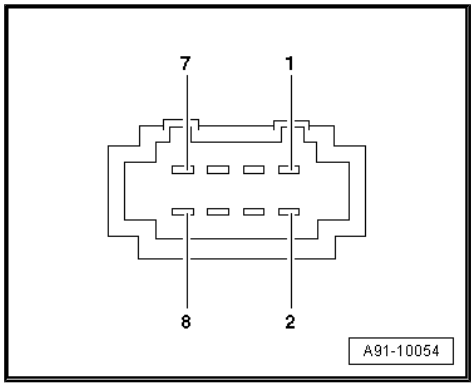

B - MOST bus

1 - Input

2 - Output

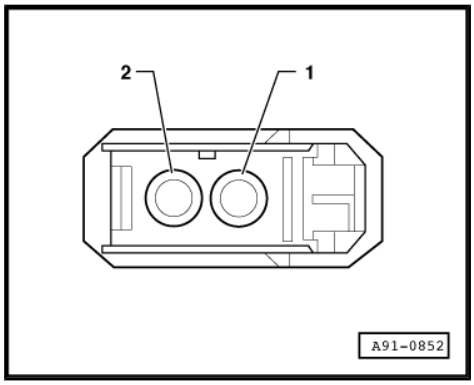

4.21 Aerials

4.21.1 General notes

The aerial system consists of the window aerials and the roof aerial.

Window aerials (up to week 35/08)

- Aerial -R11- (AM/FM)/ central locking and anti-theft alarm system aerial -R47- (FZV, remote locking)/ auxiliary heater aerial -R182- (RC)/ TV aerial 1 -R55- (TV1)/ TV aerial 2 -R56- (TV2)/ TV aerial 3 -R57- (TV3)/ TV aerial 4 -R58- (TV4)/ digital radio aerial -R183- (DAB) to aerial amplifier -R24- on rear window (top left)
- GPS aerial -R50- on rear window (top centre) (vehicles without telephone)
- Auxiliary heater aerial -R182- on rear window (top right)

Protected by copyright. Copying for private or commercial purposes, in part or in whole, is not permitted unless authorised by AUDI AG. AUDI AG does not guarantee or accept any liability with respect to the correctness of information in this document. Copyright by AUDI AG.

Window aerials (from week 36/08 onwards)

- Radio aerial 2 -R93- (AM/FM1)/ TV aerial 1 -R55- (TV1)/ TV aerial 2 -R56- (TV2)/ TV aerial 3 -R57- (TV3) to aerial amplifier -R24- on rear window (top left)
- Aerial -R11- (FM2)/ central locking and anti-theft alarm system aerial -R47- (FZV, remote locking)/ digital radio aerial -R183- (DAB) to aerial amplifier 2 -R111- on rear window (top right)
- GPS aerial -R50- on rear window (top centre) (vehicles without telephone)
- Auxiliary heater aerial -R182- on rear window (top right)

Roof aerial -R216-

- GPS aerial -R50-

- Telephone aerial -R65-
- Satellite aerial -R170- (USA only)

Roof aerial -R216- with SAT connection applies for USA versions only.

The aerial amplifier -R24- / aerial amplifier 2 -R111- with DAB connection apply for European versions only.

Repairing aerial wiring ⇒ Electrical system; Rep. Gr. 97 .

4.21.2 Overview of aerials

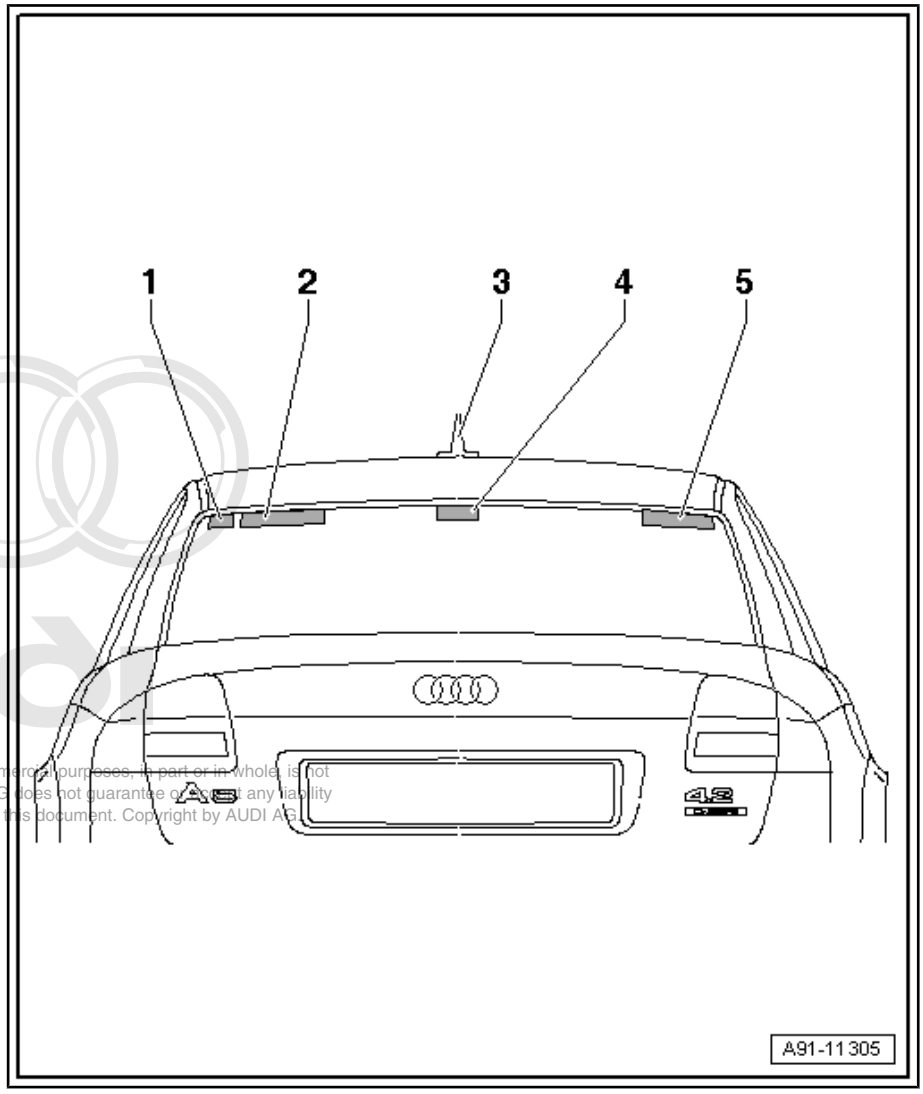

1 - Auxiliary heater aerial -R182-

- ❑ Removing and installing ⇒ page 120

2 - Aerial amplifier -R24-

- ❑ Pin assignment (up to week 35/08) ⇒ page 86
- ❑ Pin assignment (from week 36/08 onwards) ⇒ page 89
- ❑ Pin assignment (Japan) (up to model year 2006) ⇒ page 87
- ❑ Pin assignment (Japan) (from model year 2007 onwards, up to week 21/09) ⇒ page 88
- ❑ Pin assignment (China) ⇒ page 89
- ❑ Removing and installing (up to week 35/08) ⇒ page 119
- ❑ Removing and installing (from week 36/08 onwards) ⇒ page 119

Protected by copyright. Copying for private or commercial purposes, in part or in whole, is not permitted unless authorised by AUDI AG. AUDI AG does not guarantee or accept any liability with respect to the correctness of information in this document. Copyright by AUDI AG.

3 - Roof aerial -R216-

- ❑ Removing and installing ⇒ page 120
- ❑ Removing and installing (USA) ⇒ page 121

4 - GPS aerial -R50-

- ❑ Removing and installing (up to model year 2007) ⇒ page 122
- ❑ Removing and installing (from model year 2008 onwards) ⇒ page 120

5 - Aerial amplifier 2 -R111-

- ❑ Pin assignment (from week 36/08 onwards) ⇒ page 90
- ❑ Removing and installing (from week 36/08 onwards) ⇒ page 119

4.21.3 Connectors on aerial amplifier -R24- (up to week 35/08)

A - Connection for FZV (remote locking), grey to entry and start authorisation control unit -J518-

B - Connection intermediate frequency/ZF (yellow) from radio -R-

C - Connection HF (high frequency), white to radio -R-

D - Connection TV1 (green) to TV tuner -R78- / digital TV tuner -R171-

E - Connection TV2 (brown) to TV tuner -R78- / digital TV tuner -R171-

F - Connection RC (beige) to remote control receiver for auxiliary heating -R64-

G - Connection TV3 (green) to TV tuner -R78- / digital TV tuner -R171-

H - Connection TV4 (brown) to TV tuner -R78- / digital TV tuner -R171-

I - Connection DAB (black) to digital radio -R147-

1 - Earth connection on roof (9 Nm)

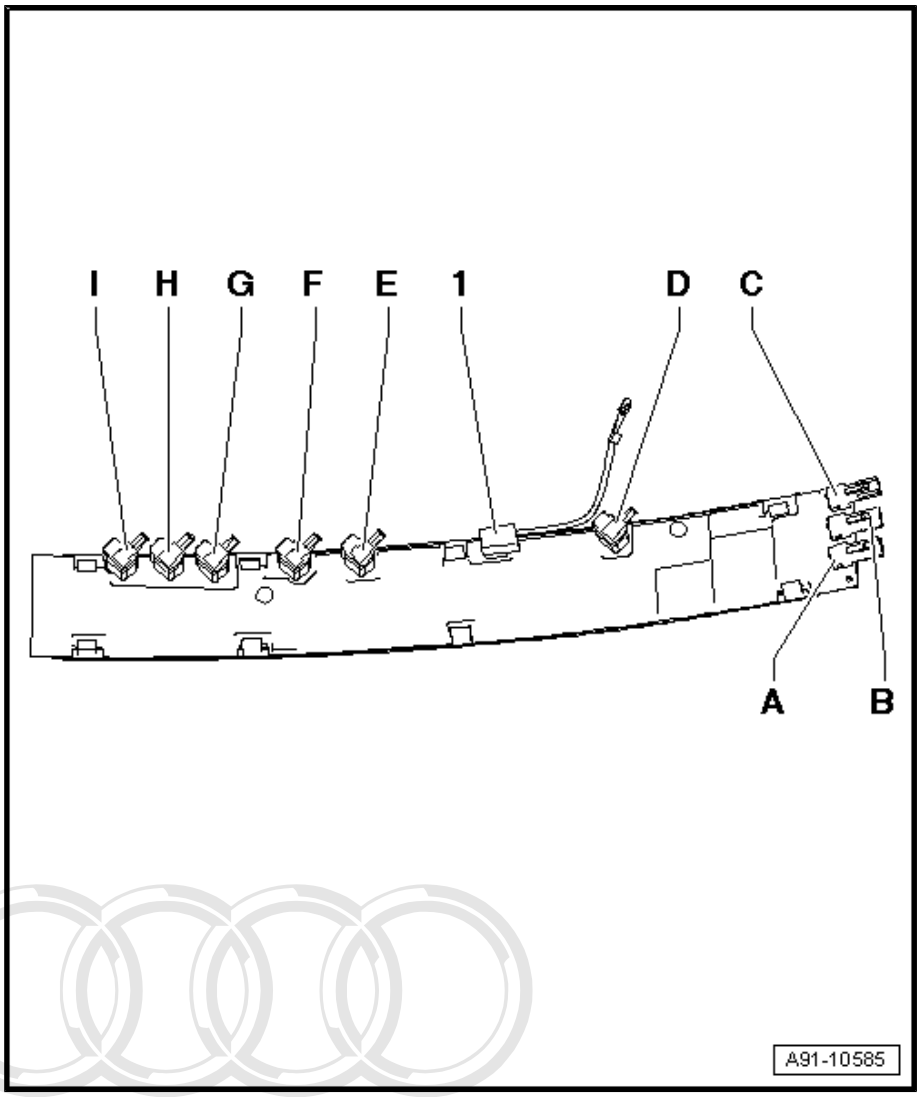

Protected by copyright. Copying for private or commercial purposes, in part or in whole, is not permitted unless authorised by AUDI AG. AUDI AG does not guarantee or accept any liability with respect to the correctness of information in this document. Copyright by AUDI AG.

4.21.4 Connectors on aerial amplifier -R24- (Japan) (up to model year 2006)

A - Connection for FZV (remote locking), grey to entry and start authorisation control unit -J518-

B - Connection intermediate frequency/ZF (yellow) from radio -R-

C - Connection HF (high frequency), white to radio -R-

D - Connection TV1 (green) to TV tuner -R78-

E - Connection TV2 (brown) to TV tuner -R78-

F - Connection VICS (black) to navigation system with CD drive control unit -J401-

G - Connection TV3 (green) to TV tuner -R78-

H - Connection TV4 (brown) to TV tuner -R78-

I - Not used

1 - Earth connection on roof (9 Nm)

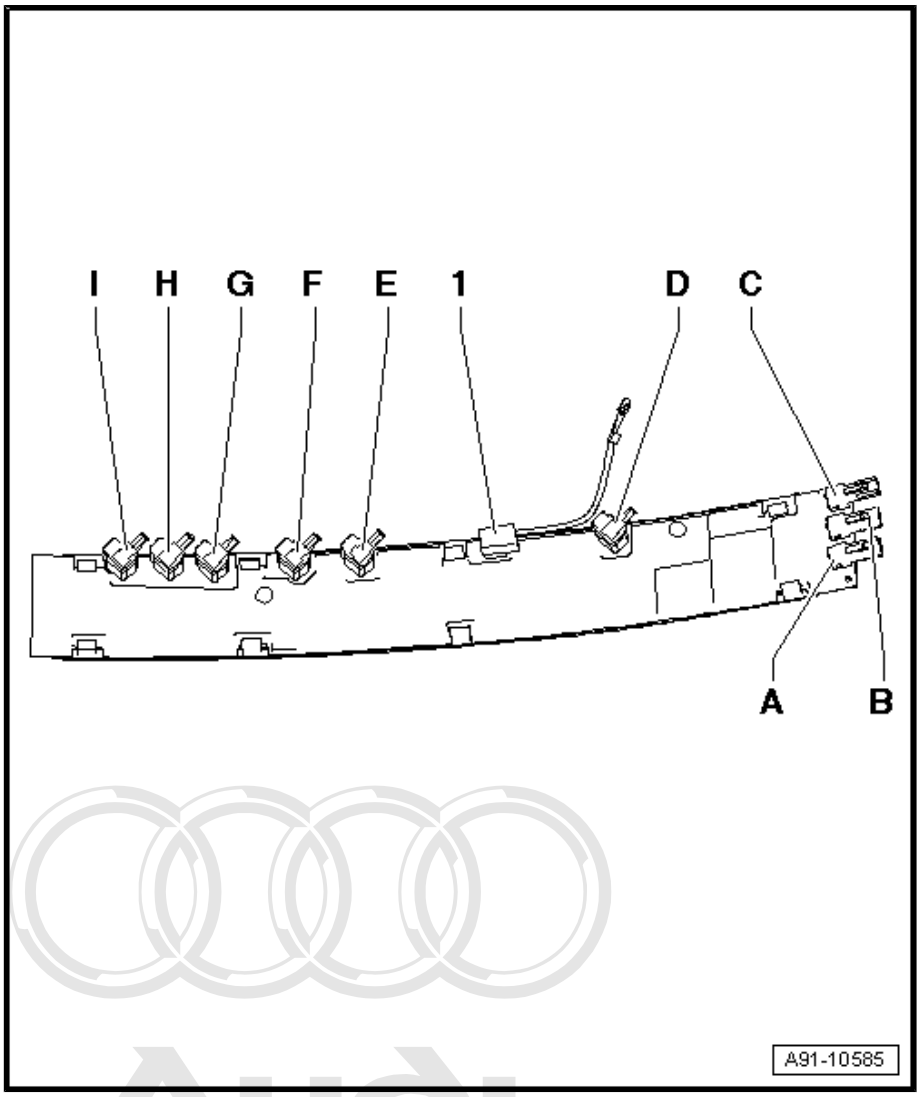

Protected by copyright. Copying for private or commercial purposes, in part or in whole, is not permitted unless authorised by AUDI AG. AUDI AG does not guarantee or accept any liability with respect to the correctness of information in this document. Copyright by AUDI AG.

4.21.5 Connectors on aerial amplifier -R24- (Japan) (from model year 2007 onwards, up to week 21/09)

A - Connection for FZV (remote locking), grey to entry and start authorisation control unit -J518-

B - Connection intermediate frequency/ZF (yellow) from radio -R-

C - Connection HF (high frequency), white to radio -R-

D - Connection TV1 (green) to TV tuner -R78-

E - Connection TV2 (brown) to TV tuner -R78-

F - Connection TV3 (green) to TV tuner -R78-

G - Connection VICS (black) to navigation system with CD drive control unit -J401-

1 - Earth connection on roof (9 Nm)

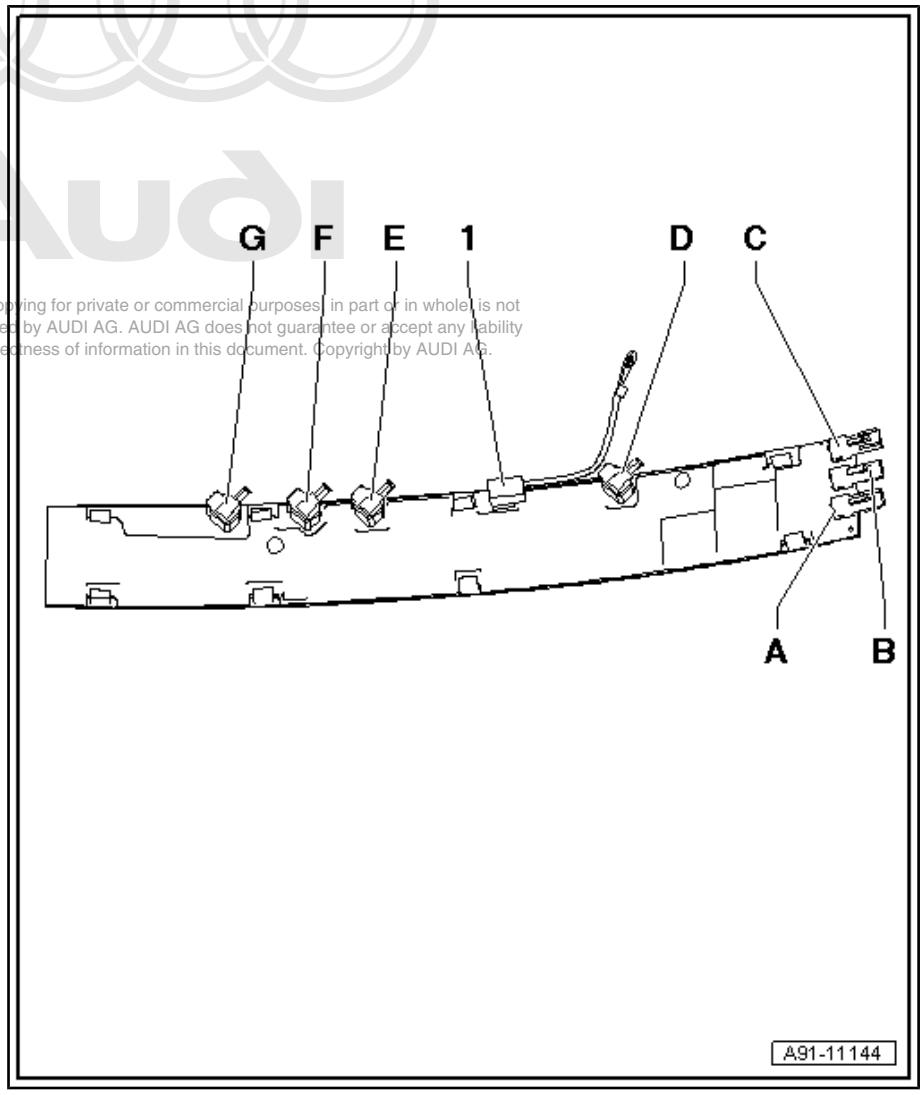

Protected by copyright. Copying for private or commercial purposes, in part or in whole, is not permitted unless authorised by AUDI AG. AUDI AG does not guarantee or accept any liability with respect to the correctness of information in this document. Copyright by AUDI AG.

4.21.6 Connectors on aerial amplifier -R24- (China)

A - Connection for FZV (remote locking), grey to entry and start authorisation control unit -J518-

B - Connection intermediate frequency/ZF (yellow) from radio -R-

C - Connection HF (high frequency), white to radio -R-

D - Connection TV1 (green) to TV tuner -R78-

E - Connection TV2 (brown) to TV tuner -R78-

F - Connection TV3 (green) to TV tuner -R78-

G - Not used

1 - Earth connection on roof (9 Nm)

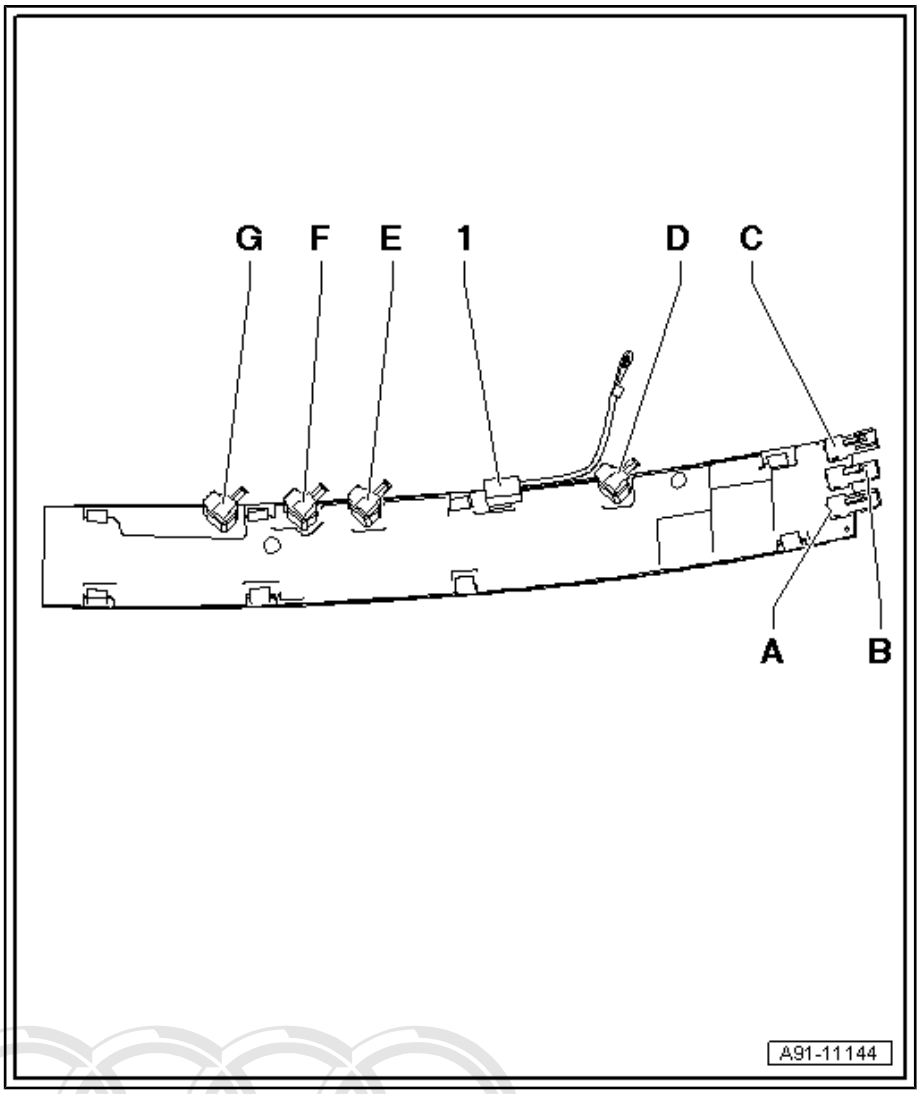

4.21.7 Connectors on aerial amplifier -R24- (from week 36/08 onwards)

1 - Connection TV1 (green) to TV tuner -R78-

2 - Connection AM/FM1 (white) to radio -R-

3 - Earth connection on roof (9 Nm)

4 - Connection TV2 (yellow) from TV tuner -R78-

5 - Connection TV3 (purple) to TV tuner -R78-

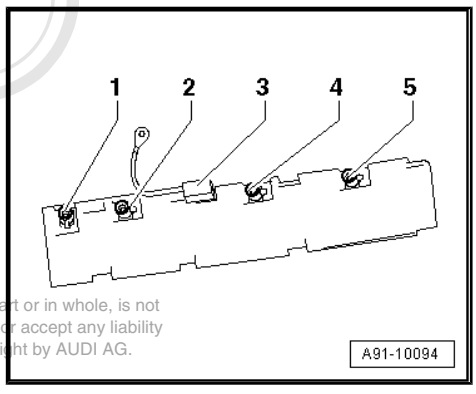

Protected by copyright. Copying for private or commercial purposes, in part or in whole, is not permitted unless authorised by AUDI AG. AUDI AG does not guarantee or accept any liability with respect to the correctness of information in this document. Copyright by AUDI AG.

4.21.8 Connectors on aerial amplifier 2 -R111- (from week 36/08 onwards)

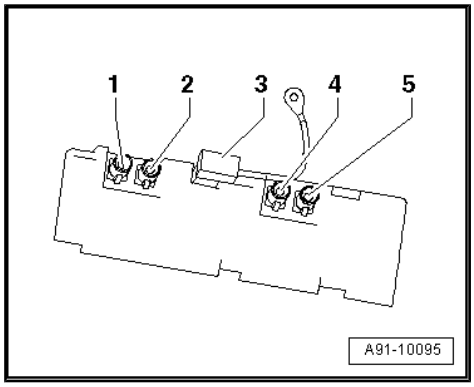

1 - Connection for FZV (remote locking), grey to entry and start authorisation control unit -J518-

2 - Not used

3 - Earth connection on roof (9 Nm)

4 - Connection FM2 (brown) to radio -R-

5 - Connection DAB (black) to radio -R-

4.22 Overview of fitting locations

1 - Loudspeakers in dash panel

- ❑ Removing and installing ⇒ page 95
- ❑ Removing and installing (Bang & Olufsen) ⇒ page 95

2 - Media player in position 1 -R118- (up to week 35/08)

- ❑ In glove box

CD changer -R41-

- ❑ Pin assignment ⇒ page 80
- ❑ Removing and installing ⇒ page 116

MiniDisc player -R153-

- ❑ Pin assignment ⇒ page 81
- ❑ Removing and installing ⇒ page 116

Connection for external audio sources -R199- (AMI)

- ❑ Pin assignment ⇒ page 82
- ❑ Removing and installing ⇒ page 117

- Control unit 1 for information electronics -J794- (from week 36/08 onwards)

- ❑ In glove box (left-side)
- ❑ Pin assignment ⇒ page 11
- ❑ Removing and installing ⇒ page 21

- Media player in position 2 -R119-

- ❑ In glove box

CD changer -R41-

- ❑ Pin assignment ⇒ page 80

CD player -R89- (up to week 35/08)

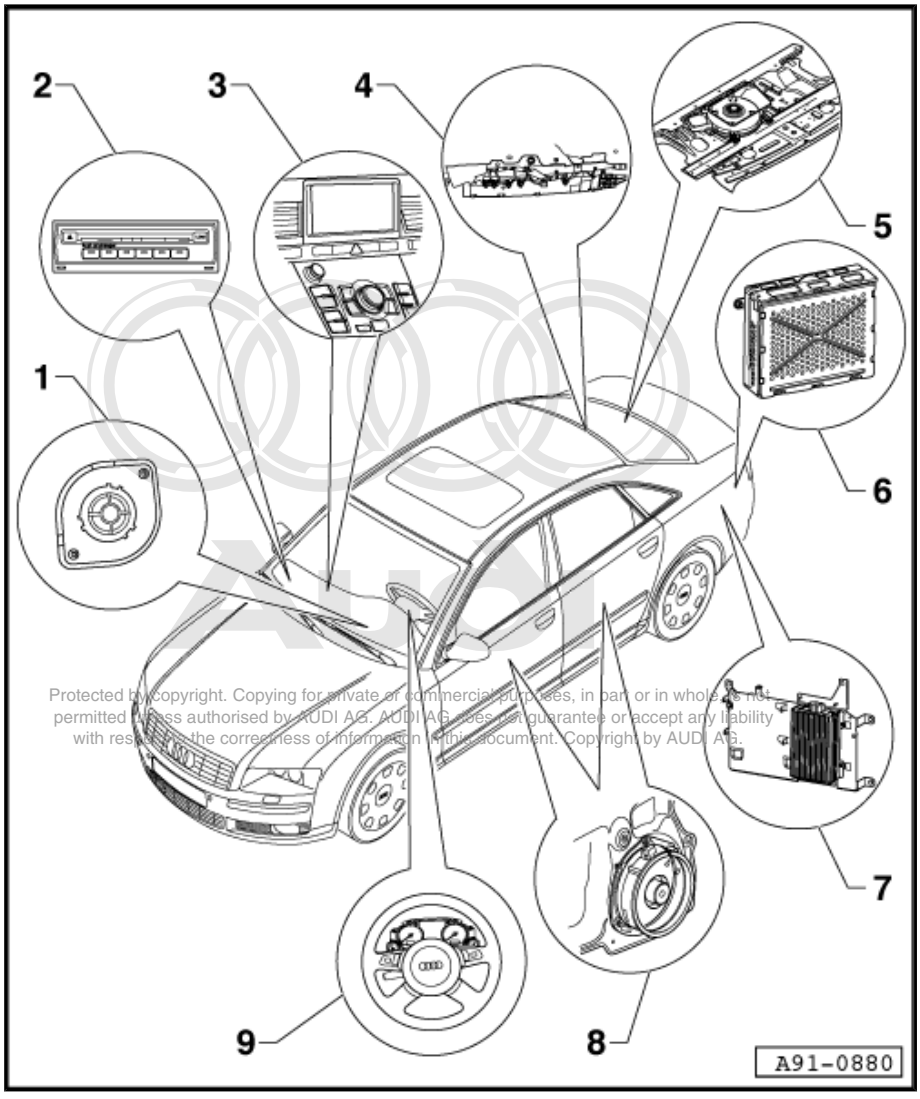

Protected by copyright. Copying for private or commercial purposes, in part or in whole, is not permitted unless authorised by AUDI AG. AUDI AG does not guarantee or accept any liability with respect to the correctness of information in this document. Copyright by AUDI AG.

- ❑ Pin assignment ⇒ page 80
- ❑ Removing and installing ⇒ page 116

DVD player -R7- (up to week 35/08)

- ❑ Pin assignment ⇒ page 227
- ❑ Removing and installing ⇒ page 238

Connection for external audio sources -R199- (interface)

- ❑ From week 36/08 onwards
- ❑ Pin assignment ⇒ page 83

3 - Display unit for front information display and operating unit control unit -J685-

- ❑ In dash panel (centre)

- Multimedia system operating unit -E380-

- ❑ In centre console (bottom)

4 - Aerial amplifier -R24-

- ❑ Behind roof end trim
- ❑ Overview ⇒ page 85

5 - Loudspeakers in rear shelf

- ❑ Removing and installing ⇒ page 96

6 - Radio -R-

- ❑ Behind luggage compartment side trim (left-side)
- ❑ With optional speech input control unit -J507- (up to week 35/08)
- ❑ Pin assignment, radio -R- (up to week 35/08) ⇒ page 70
- ❑ Pin assignment, radio -R- (from week 36/08 onwards) ⇒ page 71
- ❑ Removing and installing radio -R- (up to week 35/08) ⇒ page 109
- ❑ Removing and installing radio -R- (from week 36/08 onwards) ⇒ page 112

7 - Digital sound package control unit -J525-

- ❑ Behind luggage compartment side trim (left-side)
- ❑ Pin assignment (Standard) ⇒ page 73
- ❑ Removing and installing (Standard) (up to model year 2005) ⇒ page 99
- ❑ Removing and installing (Standard) (from model year 2006 onwards, up to week 35/08) ⇒ page 101
- ❑ Pin assignment (BOSE) ⇒ page 74
- ❑ Removing and installing (BOSE) (up to model year 2005) ⇒ page 102
- ❑ Removing and installing (BOSE) (from model year 2006 onwards) ⇒ page 104
- ❑ Pin assignment (BOSE 6000) ⇒ page 75
- ❑ Removing and installing (BOSE 6000) ⇒ page 105
- ❑ Pin assignment (Bang & Olufsen) ⇒ page 77
- ❑ Removing and installing (Bang & Olufsen) ⇒ page 106

- Digital sound package control unit 2 -J787-

- ❑ Only on Bang & Olufsen
- ❑ Pin assignment ⇒ page 78
- ❑ Removing and installing ⇒ page 108

8 - Loudspeakers in doors

- ❑ Removing and installing ⇒ page 92
- ❑ Removing and installing (Bang & Olufsen) ⇒ page 93

9 - Multi-function steering wheel

- ❑ Removing and installing buttons ⇒ page 255

Protected by copyright. Copying for private or commercial purposes, in part or in whole, is not permitted unless authorised by AUDI AG. AUDI AG does not guarantee or accept any liability with respect to the correctness of information in this document. Copyright by AUDI AG.

4.23 Removing and installing loudspeakers in doors

4.23.1 Removing and installing front left bass loudspeaker -R21-

The procedure for removing and installing front left bass loudspeaker -R21- and front right bass loudspeaker -R23- is the same.

– Switch off all electrical equipment.

– Remove ignition key.

Removing

– Remove front door trim ⇒ General body repairs, interior; Rep. Gr. 70 .

– Unplug connector at front left bass loudspeaker -R21- .

– Unscrew bolts -3- (2 Nm).

– Detach front left bass loudspeaker -R21- -2- from mounting -1-.

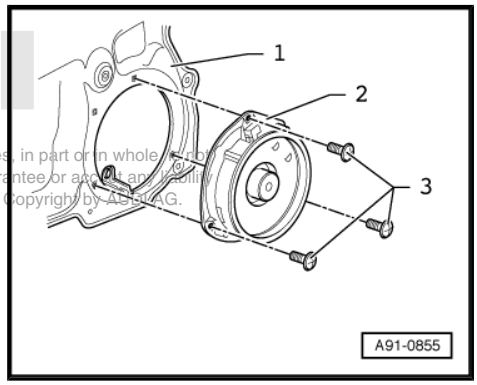

Installing

– Installation is performed in reverse sequence.

Protected by copyright. Copying for private or commercial purposes, in part or in whole, is not permitted unless authorised by AUDI AG. AUDI AG does not guarantee or accept any liability with respect to the correctness of information in this document. Copyright by AUDI AG.

4.23.2 Removing and installing rear left mid-range and bass loudspeaker -R159-

The procedure for removing and installing rear left mid-range and bass loudspeaker -R159- and rear right mid-range and bass loudspeaker -R160- is the same.

– Switch off all electrical equipment.

– Remove ignition key.

Removing

– Remove rear door trim ⇒ General body repairs, interior; Rep. Gr. 70 .

– Unplug connector at rear left mid-range and bass loudspeaker -R159- .

– Unscrew bolts -3- (2 Nm).

– Detach rear left mid-range and bass loudspeaker -R159- -2- from mounting -1-.

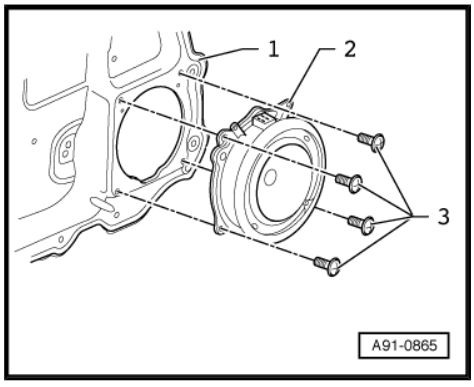

Installing

– Installation is performed in reverse sequence.

4.23.3 Removing and installing rear left treble loudspeaker -R14-

The procedure for removing and installing rear left treble loudspeaker -R14- and rear right treble loudspeaker -R16- is the same.

– Switch off all electrical equipment.

– Remove ignition key.

Protected by copyright. Copying for private or commercial purposes, in part or in whole, is not permitted unless authorised by AUDI AG. AUDI AG does not guarantee or accept any liability with respect to the correctness of information in this document. Copyright by AUDI AG.

Removing

– Remove rear door trim ⇒ General body repairs, interior; Rep. Gr. 70 .

– Unplug connector -1- at rear left treble loudspeaker -R14- -2-.

– Press retainers in direction of -arrows-.

– Detach rear left treble loudspeaker -R14- -2- from door trim.

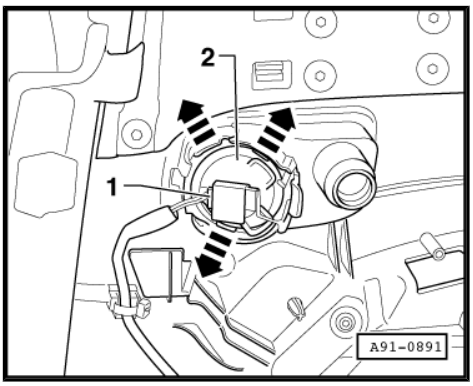

Installing

– Installation is performed in reverse sequence.

4.23.4 Removing and installing loudspeakers (Bang & Olufsen)

Removing front left mid-range loudspeaker -R103-

The front left mid-range loudspeaker -R103- / front right mid-range loudspeaker -R104- are fitted in the housing of the front left bass loudspeaker -R21- / front right bass loudspeaker -R23- and cannot be replaced separately. If they need to be renewed, renew front left bass loudspeaker -R21- / front right bass loudspeaker -R23- ⇒ page 93 .

Removing cover for front left mid-range loudspeaker -R103-

– Remove front left bass loudspeaker -R21- ⇒ page 93 .

Cover -1- is pushed onto three plastic pins on door trim -2-.

– Detach cover -1- from door trim -2-.

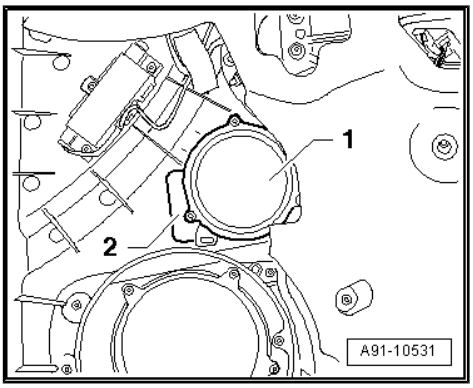

Removing front left bass loudspeaker -R21-

The procedure for removing and installing front left bass loudspeaker -R21- and front right bass loudspeaker -R23- is the same.

– Switch off all electrical equipment.

– Remove ignition key.

– Remove front door trim ⇒ General body repairs, interior; Rep. Gr. 70 .

– Unplug electrical connector -2- at front left bass loudspeaker -R21- -1-.
– Unscrew bolts -arrows- (4 Nm).
– Detach front left bass loudspeaker -R21- -1- from door.

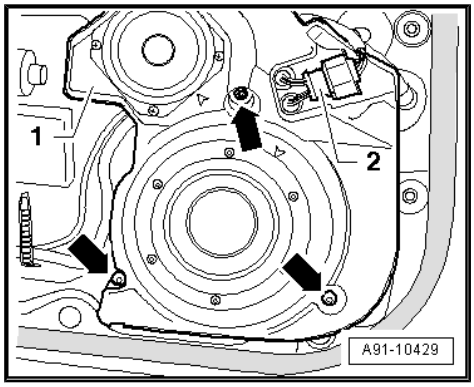

Installing

– Installation is performed in reverse sequence.

Removing cover for front left bass loudspeaker -R21-

– Remove front left bass loudspeaker -R21- ⇒ page 93 .

– Unscrew bolts -arrows- (2 Nm) on cover -1-.
– Detach cover -1- from door trim -2-.

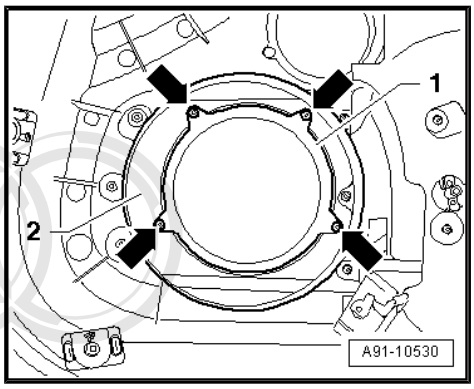

Removing rear left treble loudspeaker -R14-

The procedure for removing and installing rear left treble loudspeaker -R14- and rear right treble loudspeaker -R16- is the same.

– Switch off all electrical equipment.
– Remove ignition key.
– Remove rear door trim ⇒ General body repairs, interior; Rep. Gr. 70 .

– Unplug connector -1- at rear left treble loudspeaker -R14- -2-.
– Press retainers in direction of -arrows-.
– Detach rear left treble loudspeaker -R14- -2- from door trim.

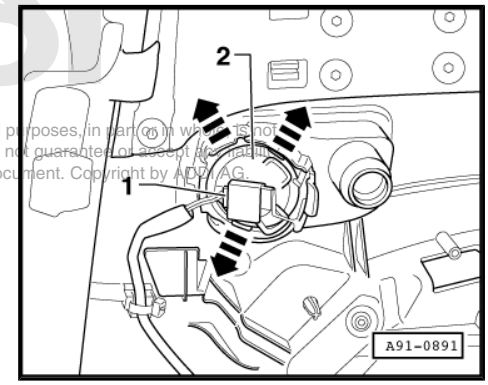

Protected by copyright. Copying for private or commercial purposes, in part or in whole, is not permitted unless authorised by AUDI AG. AUDI AG does not guarantee or accept any liability with respect to the correctness of information in this document. Copyright by AUDI AG.

Installing

– Installation is performed in reverse sequence.

Removing rear left mid-range and bass loudspeaker -R159-

The procedure for removing and installing rear left mid-range and bass loudspeaker -R159- and rear right mid-range and bass loudspeaker -R160- is the same.

– Switch off all electrical equipment.
– Remove ignition key.
– Remove rear door trim ⇒ General body repairs, interior; Rep. Gr. 70 .

– Unplug electrical connector -1- at rear left mid-range and bass loudspeaker -R159- -2-.
– Unscrew bolts -arrows- (4 Nm).
– Detach rear left mid-range and bass loudspeaker -R159- -2- from door.

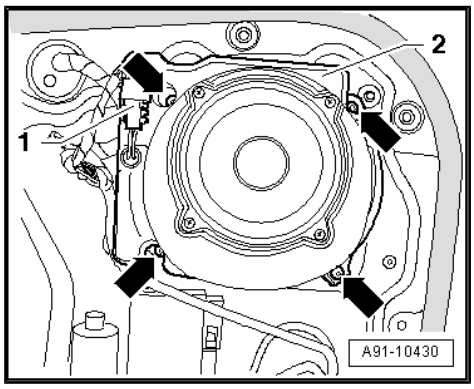

Installing

– Installation is performed in reverse sequence.

4.24 Removing and installing loudspeakers in dash panel

4.24.1 Removing and installing front left mid-range and treble loudspeaker -R26-

The procedure for removing and installing front left mid-range and treble loudspeaker -R26- / front right mid-range and treble loudspeaker -R27- / centre mid-range and treble loudspeaker -R158- / front left treble loudspeaker -R20- / front right treble loudspeaker -R22- is the same.

– Switch off all electrical equipment.

– Remove ignition key.

Removing

– Remove indirect ventilation trim panel ⇒ General body repairs, interior; Rep. Gr. 70 .

– Unscrew bolts -arrows- (2 Nm) at front left mid-range and treble loudspeaker -R26- -2-.

– Lift front left mid-range and treble loudspeaker -R26- -2- out of dash panel -1- and unplug connector.

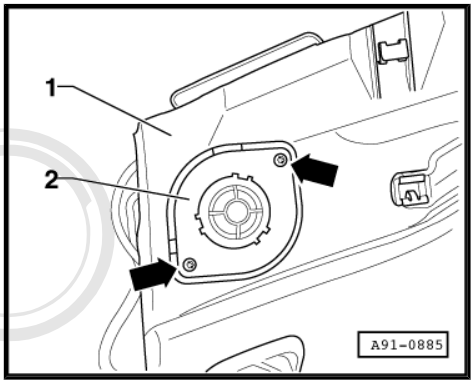

Installing

– Installation is performed in reverse sequence.

4.24.2 Removing and installing loudspeakers (Bang & Olufsen)

Removing and installing centre mid-range and treble loudspeaker -R158-

Protected by copyright. Copying for private or commercial purposes, in part or in whole, is not permitted unless authorised by AUDI AG. AUDI AG does not guarantee or accept any liability with respect to the correctness of information in this document. Copyright by AUDI AG.

The centre mid-range and treble loudspeaker -R158- is removed and installed as described in ⇒ page 95 .

Removing and installing front left treble loudspeaker -R20-

The procedure for removing and installing front left treble loudspeaker -R20- and front right treble loudspeaker -R22- is the same.

– Switch off all electrical equipment.

– Remove ignition key.

Removing

– Remove indirect ventilation trim panel ⇒ General body repairs, interior; Rep. Gr. 70 .

To avoid damage, trim panel -1- can be detached from front left treble loudspeaker -R20- -2-.

– Unscrew bolts -arrows- (2 Nm).

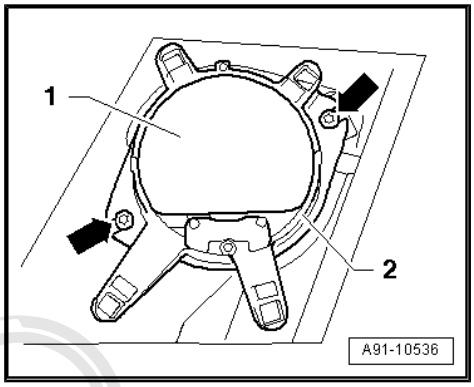

– Take hold of front left treble loudspeaker -R20- -1- and twist in direction of arrow -B-, at the same time pulling carefully out of dash panel -2- in direction of arrow -A-.

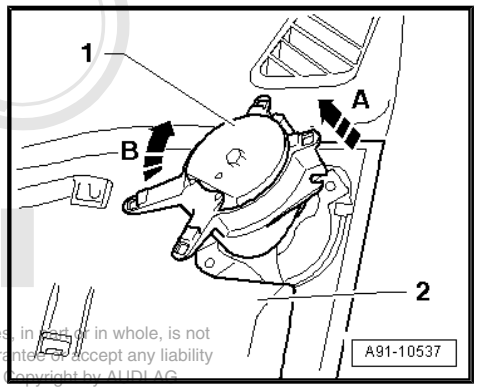

Protected by copyright. Copying for private or commercial purposes, in part or in whole, is not permitted unless authorised by AUDI AG. AUDI AG does not guarantee or accept any liability with respect to the correctness of information in this document. Copyright by AUDI AG

– Continue to pull front left treble loudspeaker -R20- -2- out of dash panel in direction of arrow -A- and twist in direction of arrow -B- until you can reach electrical connector -1-.

– Unplug connector -1- and secure connector to stop it dropping into dash panel.

– Detach front left treble loudspeaker -R20- .

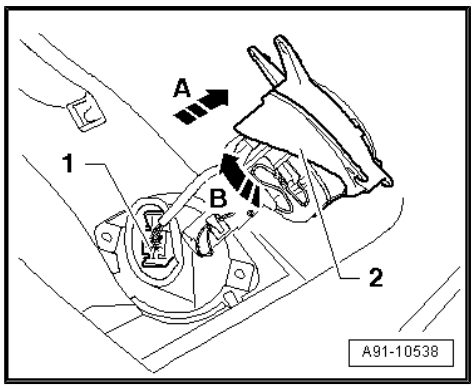

Installing

– Installation is performed in reverse sequence.

4.25 Removing and installing loudspeakers in rear shelf

4.25.1 Removing and installing subwoofer in rear shelf -R157-

– Switch off all electrical equipment.

– Remove ignition key.

Removing

– Remove rear shelf ⇒ General body repairs, interior; Rep. Gr. 70 .

– Unplug connector at subwoofer in rear shelf -R157- .

– Unscrew bolts -3- (2 Nm) at subwoofer in rear shelf -R157- -2-.
– Lift off subwoofer in rear shelf -R157- -2- from rear shelf -1-.

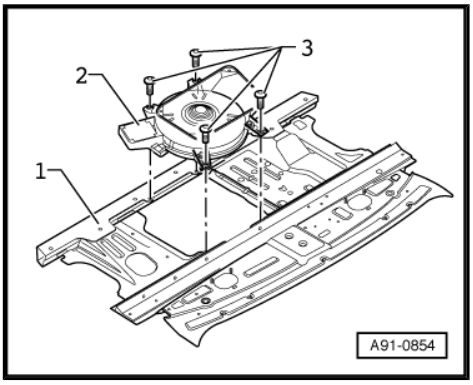

Installing

– Installation is performed in reverse sequence.

4.25.2 Removing and installing loudspeaker in rear shelf -R150-

– Switch off all electrical equipment.
– Remove ignition key.

Removing

– Remove rear shelf ⇒ General body repairs, interior; Rep. Gr. 70 .
– Unplug connector at loudspeaker in rear shelf -R150- .
– Unscrew bolts -1- (3 Nm) at loudspeaker in rear shelf -R150- -2-.
– Lift off loudspeaker in rear shelf -R150- -2- from rear shelf -3-.

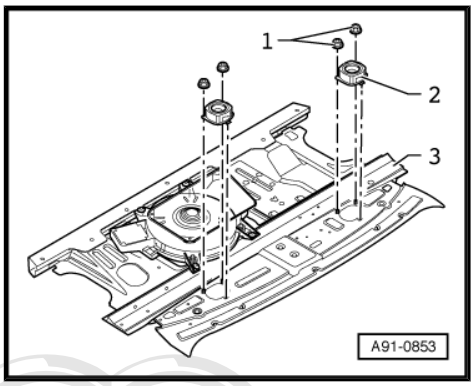

Installing

– Installation is performed in reverse sequence.
– When installing, make sure that lugs of loudspeaker in rear shelf -R150- -arrow- engage in recesses in rear shelf.

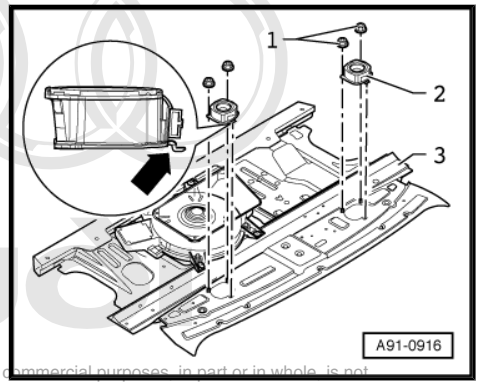

Protected by copyright. Copying for private or commercial purposes, in part or in whole, is not permitted unless authorised by AUDI AG. AUDI AG does not guarantee or accept any liability with respect to the correctness of information in this document. Copyright by AUDI AG.

4.25.3 Removing and installing loudspeakers (Bang & Olufsen)

In vehicles with Bang & Olufsen sound system, subwoofer in rear shelf -R157- and rear left mid-range loudspeaker -R105- / rear right mid-range loudspeaker -R106- are fitted in the rear shelf.

The procedure for removing and installing rear left mid-range loudspeaker -R105- and rear right mid-range loudspeaker -R106- is the same.

Removing subwoofer in rear shelf -R157-

– Remove rear shelf ⇒ General body repairs, interior; Rep. Gr. 70 .

– Unplug connector -2- at subwoofer in rear shelf -R157- -1-.

– Unscrew bolts -arrows- (2 Nm).

– Lift off subwoofer in rear shelf -R157- -1- from rear shelf.

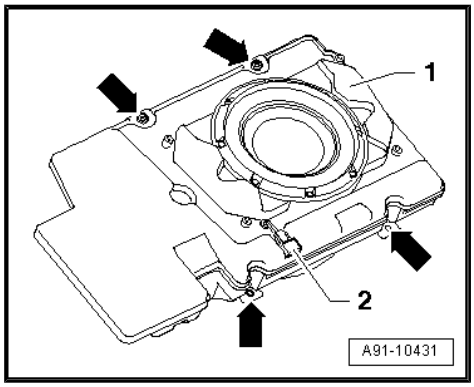

Installing

– Installation is performed in reverse sequence.

Removing rear left mid-range loudspeaker -R105-

Rear left mid-range loudspeaker -R105- and rear right mid-range loudspeaker -R106- are screwed onto reverse side of rear shelf. The wires of both loudspeakers are connected to a 4-pin connector (T4y). Release the relevant wire from connector contacts when renewing one of the loudspeakers.

– Remove rear shelf ⇒ General body repairs, interior; Rep. Gr. 70 .

– Working from underside of rear shelf, unscrew bolts -arrows- (3 Nm) at rear left mid-range loudspeaker -R105- -1-.

– Detach rear left mid-range loudspeaker -R105- -1- together with wire from rear shelf.

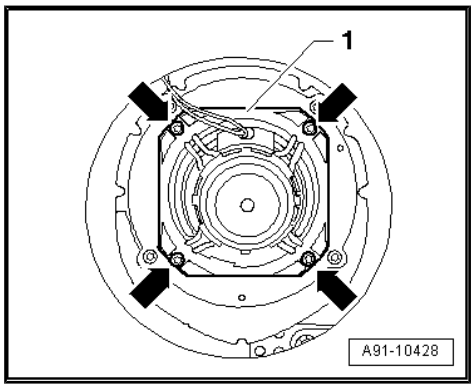

Installing

– Installation is performed in reverse sequence.

Removing cover for rear left mid-range loudspeaker -R105-

Rear left mid-range loudspeaker -R105- is fitted to the rear shelf via a ring, onto which the loudspeaker is secured. Rear left mid-range loudspeaker -R105- does not have to be removed in order to renew cover.

– Remove rear shelf ⇒ General body repairs, interior; Rep. Gr. 70 .

– Unscrew bolts on ring holding loudspeaker -arrows- (3 Nm) on reverse side of rear shelf.

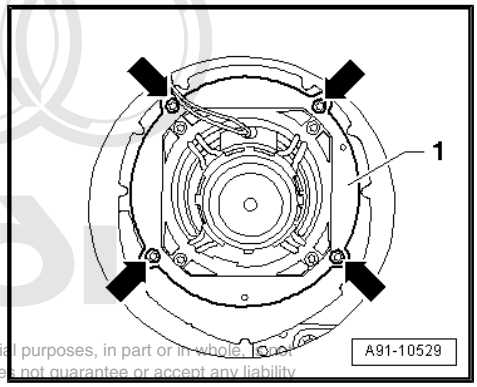

Protected by copyright. Copying for private or commercial purposes, in part or in whole, is not permitted unless authorised by AUDI AG. AUDI AG does not guarantee or accept any liability with respect to the correctness of information in this document. Copyright by AUDI AG.

– Remove rear left mid-range loudspeaker -R105- together with ring -1- and move both parts clear to one side.
– Remove cover for loudspeaker -2-.

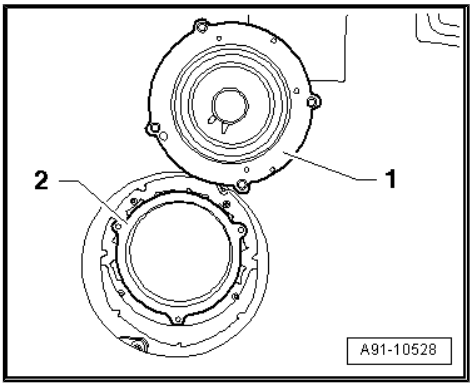

4.26 Removing and installing digital sound package control unit -J525- (Standard) (up to model year 2005)

Special tools and workshop equipment required

♦ Repair set for fibre optic cables -VAS 6223-

Protected by copyright. Copying for private or commercial purposes, in part or in whole, is not permitted unless authorised by AUDI AG. AUDI AG does not guarantee or accept any liability with respect to the correctness of information in this document. Copyright by AUDI AG.

♦ Protective cap for cable connector -VAS 6223/9-

First remove digital TV tuner -R171- on vehicles with digital radio -R147- and TV tuner -R78- with digital TV tuner -R171- .

– When renewing control unit, select “Replacement” function for appropriate control unit in “Guided Fault Finding”.

To do so, use the vehicle diagnostic, testing and information system -VAS 5051- .

– Switch off all electrical equipment.
– Remove ignition key.

Removing

– Remove luggage compartment side trim (left-side) ⇒ General body repairs, interior; Rep. Gr. 70 .

Vehicles with digital radio -R147- / TV tuner -R78- and digital TV tuner -R171-

– Start by removing digital TV tuner -R171- ⇒ page 236 .

All vehicles

– Unbolt parking aid control unit -J446- ⇒ Electrical system; Rep. Gr. 94 .

– Unfasten nuts -arrows- (6 Nm) and remove fuse holder -1-.
– Unplug all connectors at radio -R- and digital radio -R147- .

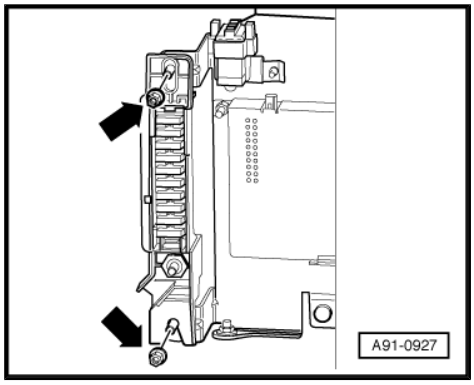

– Fit protective cap for cable connector -VAS 6223/9- -1- onto MOST bus connector -2-.

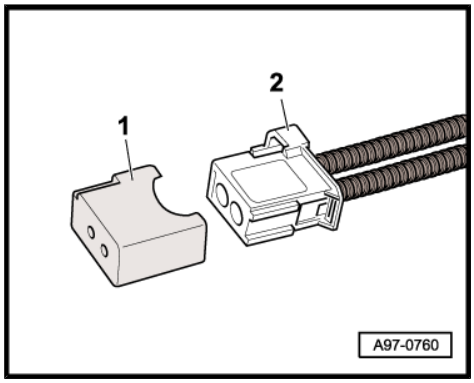

– Unscrew nuts -arrows- (8 Nm) at attaching points of retaining plate -3-.
– Unplug all connectors at digital sound package control unit -J525- -1- and TV tuner -R78- -2-.

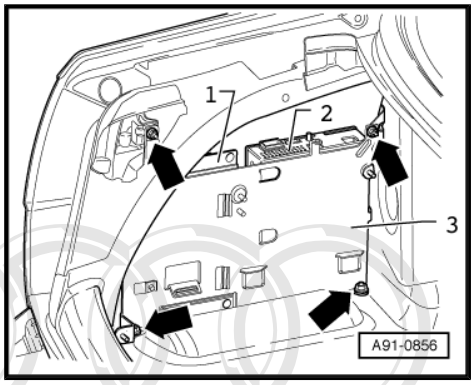

– Fit protective cap for cable connector -VAS 6223/9- -1- onto MOST bus connector -2-.
– Pull out retaining plate -3- to right.

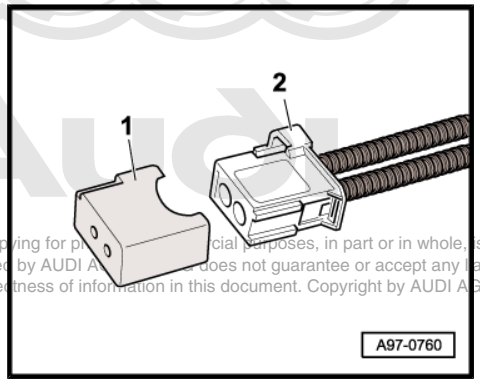

Protected by copyright. Copying for private or commercial purposes, in part or in whole, is not permitted unless authorised by AUDI AG. AUDI AG does not guarantee or accept any liability with respect to the correctness of information in this document. Copyright by AUDI AG.

– Unscrew bolts -3- (3 Nm) on reverse side of retaining plate -2- on digital sound package control unit -J525- -1-.

– Detach digital sound package control unit -J525- -1- from retaining plate -2-.

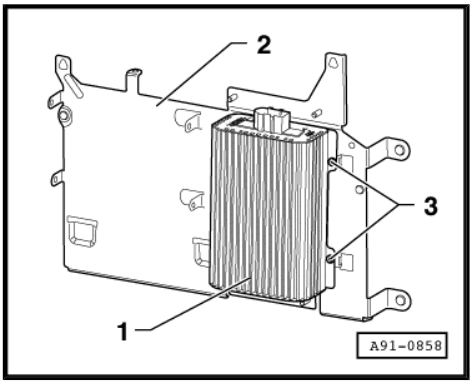

Installing

– Installation is performed in reverse sequence.

4.27 Removing and installing digital sound package control unit -J525- (Standard) (from model year 2006 onwards, up to week 35/08)

Special tools and workshop equipment required

♦ Repair set for fibre optic cables -VAS 6223-

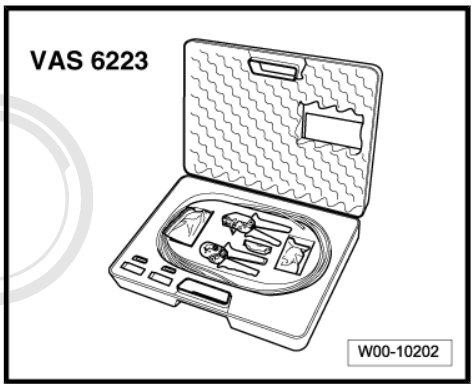

♦ Protective cap for cable connector -VAS 6223/9-

– When renewing control unit, select “Replacement” function for appropriate control unit in “Guided Fault Finding”.

Protected by copyright. Copying for private or commercial purposes, in part or in whole, is not permitted unless authorised by AUDI AG. AUDI AG does not guarantee or accept any liability with respect to the content. Copyright by AUDI AG.

To do so, use the vehicle diagnostic, testing and information system -VAS 5051- .

– Switch off all electrical equipment.

– Remove ignition key.

Removing

– Open left-side luggage compartment storage area.

– Unplug connectors -1- on digital sound package control unit -J525- -4-.

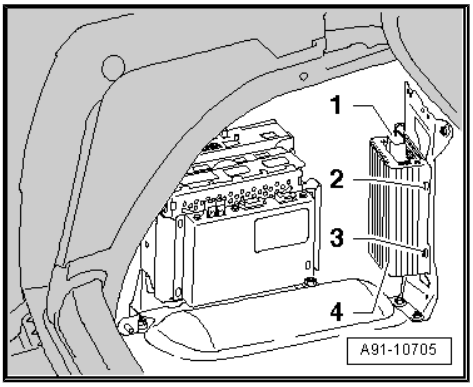

– Fit protective cap for cable connector -VAS 6223/9- -1- onto MOST bus connector -2-.

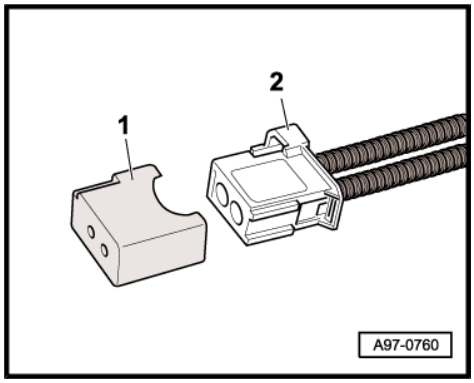

– Unscrew bolts -2- and -3- (3 Nm) on digital sound package control unit -J525- -4-.
– Detach digital sound package control unit -J525- -4-.

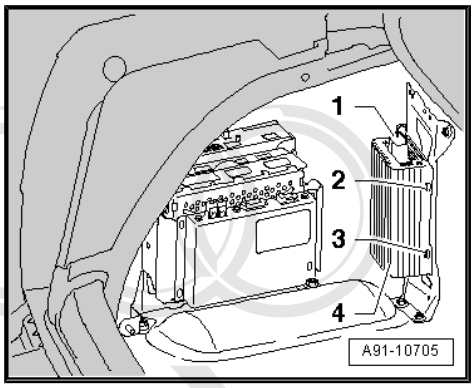

Installing

– Installation is performed in reverse sequence.

Note that sponge rubber strips are fitted on bracket to prevent rattling.

4.28 Removing and installing digital sound package control unit -J525- (BOSE) (up to model year 2005)

Protected by copyright. Copying for private or commercial purposes, in part or in whole, is not permitted unless authorised by AUDI AG. AUDI AG does not guarantee or accept any liability with respect to the correctness of information in this document. Copyright by AUDI AG.

Special tools and workshop equipment required

♦ Repair set for fibre optic cables -VAS 6223-

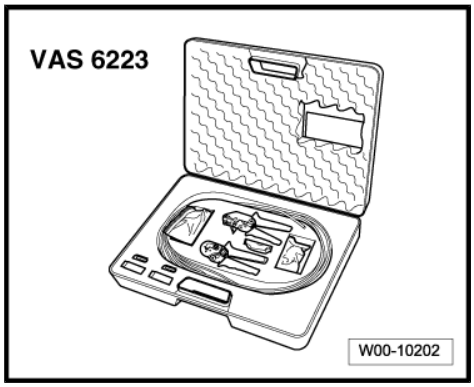

♦ Protective cap for cable connector -VAS 6223/9-

First remove digital TV tuner -R171- on vehicles with digital radio -R147- and TV tuner -R78- with digital TV tuner -R171- .

– When renewing control unit, select “Replacement” function for appropriate control unit in “Guided Fault Finding”.

To do so, use the vehicle diagnostic, testing and information system -VAS 5051- .

– Switch off all electrical equipment.
– Remove ignition key.

Removing

– Remove luggage compartment side trim (left-side) ⇒ General body repairs, interior; Rep. Gr. 70 .

Vehicles with digital radio -R147- / TV tuner -R78- and digital TV tuner -R171-

– Start by removing digital TV tuner -R171- ⇒ page 236 .

All vehicles

– Unbolt parking aid control unit -J446- ⇒ Electrical system; Rep. Gr. 94 .

– Unfasten nuts -arrows- (6 Nm) and remove fuse holder -1-.

– Unplug all connectors at radio -R- and digital radio -R147- .

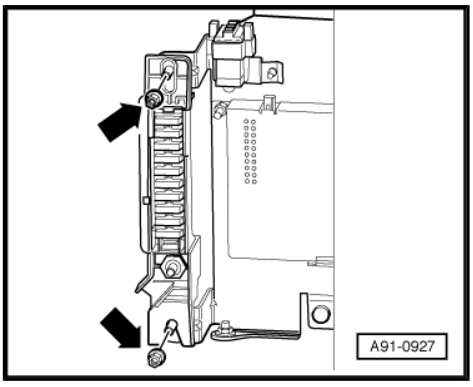

– Fit protective cap for cable connector -VAS 6223/9- -1- onto MOST bus connector -2-.

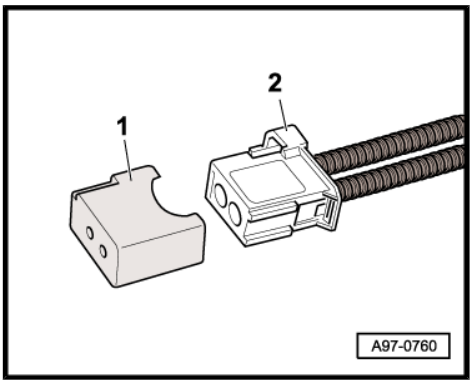

– Unscrew nuts -arrows- (8 Nm) at attaching points of retaining plate -3-.

– Unplug all connectors at digital sound package control unit -J525- -1- and TV tuner -R78- -2-.

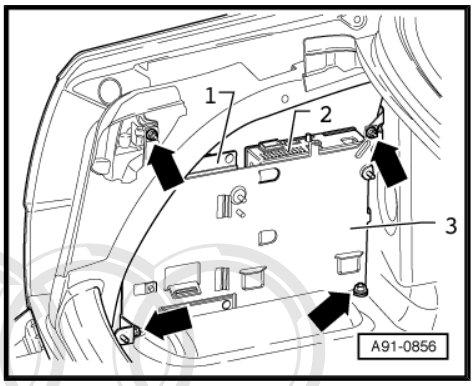

– Fit protective cap for cable connector -VAS 6223/9- -1- onto MOST bus connector -2-.

– Pull out retaining plate -3- to right.

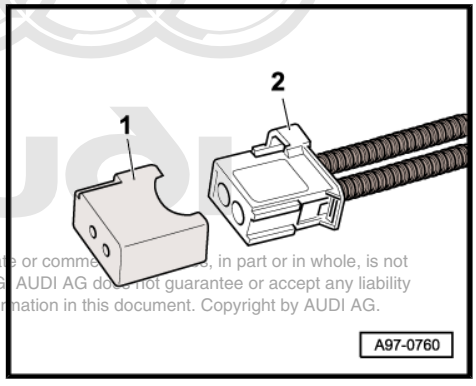

Protected by copyright. Copying for private or commercial purposes, in part or in whole, is not permitted unless authorised by AUDI AG. AUDI AG does not guarantee or accept any liability with respect to the correctness of information in this document. Copyright by AUDI AG.

– Unscrew bolts -arrows- (5 Nm) on reverse side of retaining plate -2- on digital sound package control unit -J525- -1-.
– Detach digital sound package control unit -J525- -1- from retaining plate -2-.

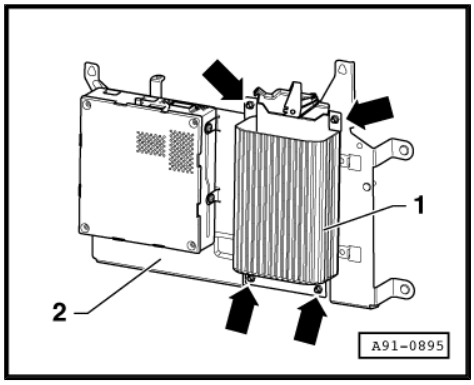

Installing

– Installation is performed in reverse sequence.

4.29 Removing and installing digital sound package control unit -J525- (BOSE) (from model year 2006 onwards)

Special tools and workshop equipment required

♦ Repair set for fibre optic cables -VAS 6223-

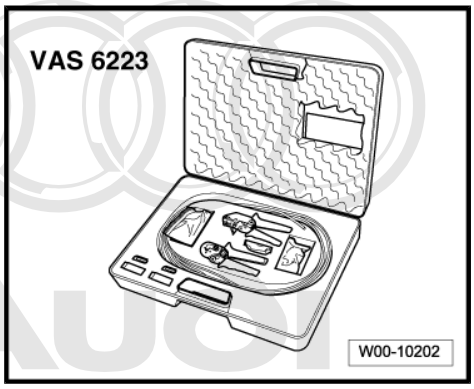

Protected by copyright. Copying for private or commercial purposes, in part or in whole, is not permitted unless authorised by AUDI AG. AUDI AG does not guarantee or accept any liability with respect to the correctness of information in this document. Copyright by AUDI AG.

♦ Protective cap for cable connector -VAS 6223/9-
– Switch off all electrical equipment.
– Remove ignition key.

Removing

– Open left-side luggage compartment storage area.
– Unplug connectors -4- on digital sound package control unit -J525- -2-.

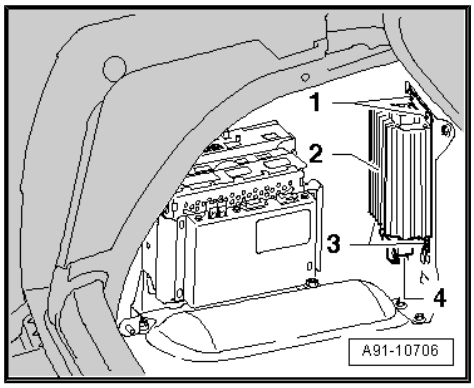

– Fit protective cap for cable connector -VAS 6223/9- -1- onto MOST bus connector -2-.

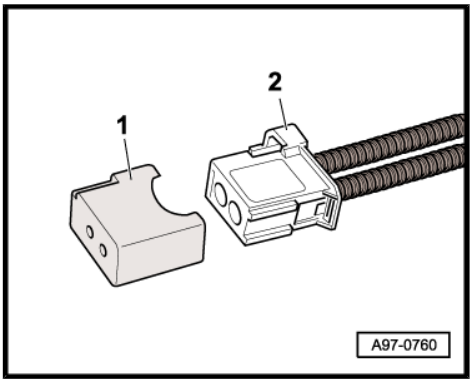

– Unscrew bolts -1- and -3- (4 Nm) on digital sound package control unit -J525- -2-.

– Detach digital sound package control unit -J525- -2-.

Installing

– Installation is performed in reverse sequence.

Note that sponge rubber strips are fitted on bracket to prevent rattling.

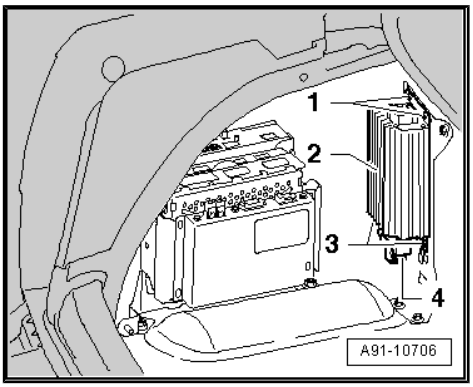

Protected by copyright. Copying for private or commercial purposes, in part or in whole, is not permitted unless authorised by AUDI AG. AUDI AG does not guarantee or accept any liability with respect to the correctness of information in this document. Copyright by AUDI AG.

4.30 Removing and installing digital sound package control unit -J525- (BOSE 6000)

Special tools and workshop equipment required

♦ Repair set for fibre optic cables -VAS 6223-

♦ Protective cap for cable connector -VAS 6223/9-

– Switch off all electrical equipment.

– Remove ignition key.

Removing

– Open left-side luggage compartment storage area.

– Unplug connectors -3- and -5- on digital sound package control unit -J525- -2-.

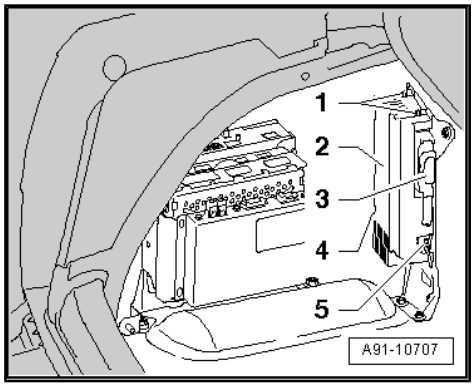

– Fit protective cap for cable connector -VAS 6223/9- -1- onto MOST bus connector -2-.

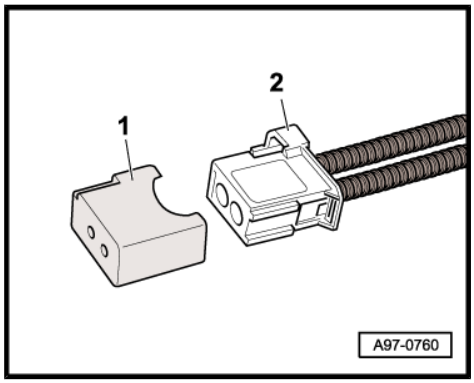

– Unscrew bolts -1- and -4- (4 Nm) on digital sound package control unit -J525- -2-.

– Detach digital sound package control unit -J525- -2-.

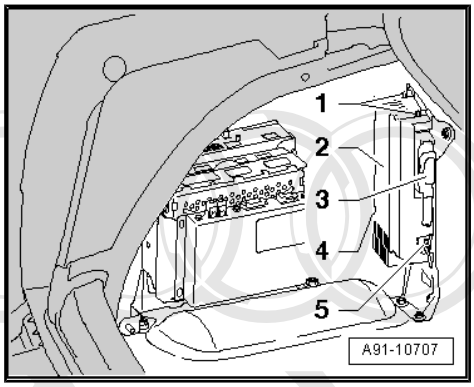

Installing

– Installation is performed in reverse sequence.

Note that sponge rubber strips are fitted on digital sound package control unit -J525- and bracket to prevent rattling.

4.31 Removing and installing digital sound package control unit -J525- (Bang & Olufsen)

Protected by copyright. Copying for private or commercial purposes, in part or in whole, is not permitted unless authorised by AUDI AG. AUDI AG does not guarantee or accept any liability with respect to the correctness of information in this document. Copyright by AUDI AG.

Special tools and workshop equipment required

♦ Repair set for fibre optic cables -VAS 6223-

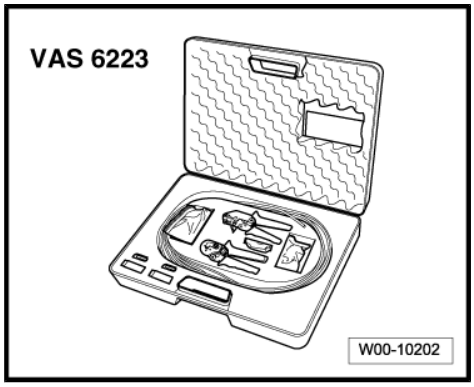

♦ Protective cap for cable connector -VAS 6223/9-

– Switch off all electrical equipment.

– Remove ignition key.

Removing

– Open left-side luggage compartment storage area.

The digital sound package control unit -J525- is bolted onto the retainer only at the front.

– Unplug connector -2- on digital sound package control unit -J525- -1-.

– Unscrew bolts -arrows- (6 Nm).

– Pull digital sound package control unit -J525- -1- out of retainer.

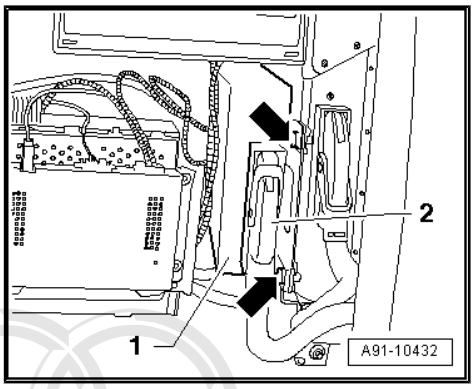

– Now unplug connectors -1- and -2- on digital sound package control unit -J525- -3-.

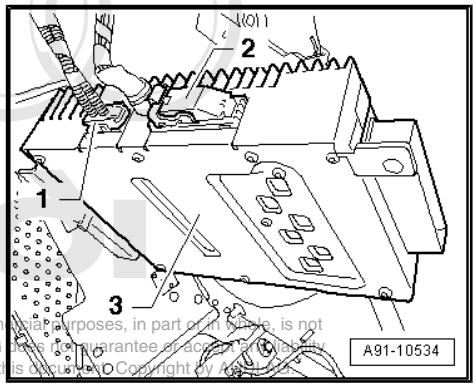

Protected by copyright. Copying for private or commercial purposes, in part or in whole, is not permitted unless authorised by AUDI AG. AUDI AG does not guarantee or accept any liability with respect to the correctness of information in this document. Copyright by AUDI AG.

– Fit protective cap for cable connector -VAS 6223/9- -1- onto MOST bus connector -2-.

Installing

– Installation is performed in reverse sequence.

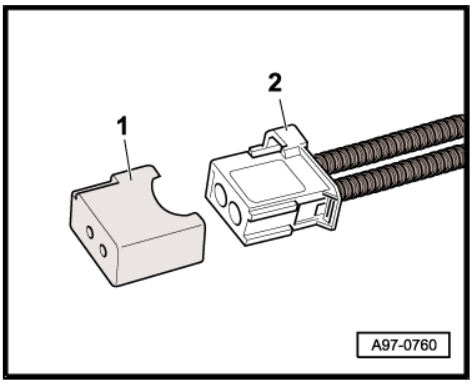

– Make sure that the digital sound package control unit -J525- engages properly in retaining springs -arrows- at rear of retainer.

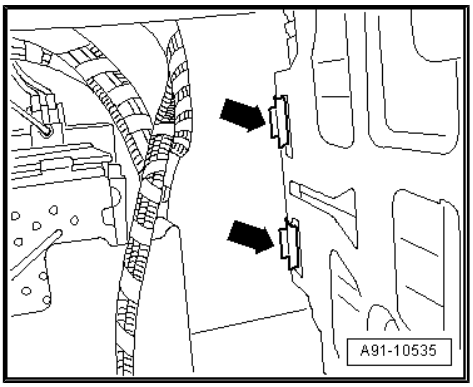

4.32 Removing and installing digital sound package control unit 2 -J787- (Bang & Olufsen)

– Switch off all electrical equipment.

– Remove ignition key.

Removing

– Open left-side luggage compartment storage area.

– First remove the digital sound package control unit -J525- ⇒ page 106 .

The digital sound package control unit 2 -J787- must be removed together with the retainer.

– Unplug connector -3- on digital sound package control unit 2 -J787- .

– Unscrew nuts -1-, -4- and -5- (3 Nm) and remove retainer -2- together with digital sound package control unit 2 -J787- towards the right.

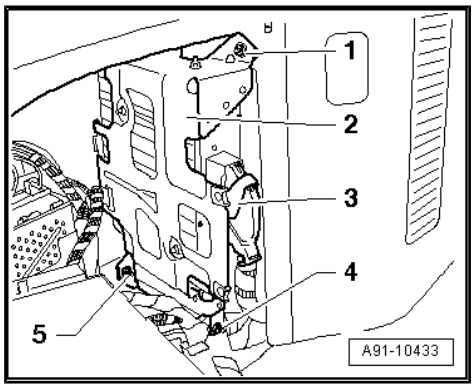

– Unscrew nuts -1- and -2- (3 Nm) on reverse side of control unit.

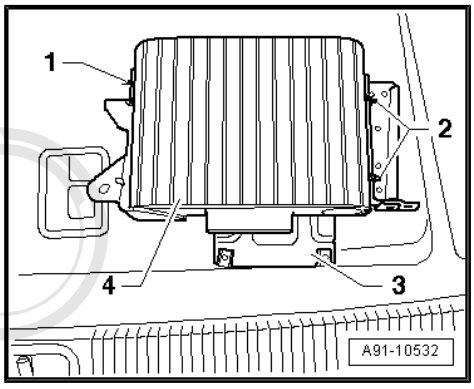

– Turn over retainer -3- with digital sound package control unit 2 -J787- -4- and unscrew nuts -1- and -2- (3 Nm) on front side of retainer.

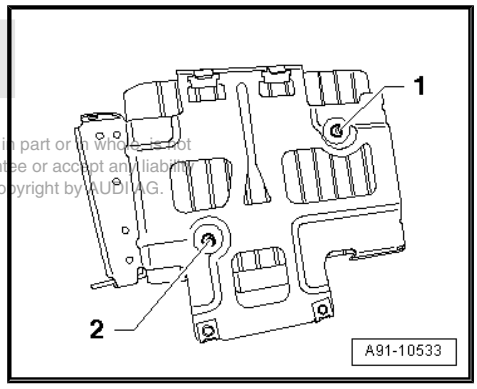

Protected by copyright. Copying for private or commercial purposes, in part or in whole, is not permitted unless authorised by AUDI AG. AUDI AG does not guarantee or accept any liability with respect to the correctness of information in this document. Copyright by AUDI AG.

– Detach digital sound package control unit 2 -J787- -4- from retainer -3-.

Installing

– Installation is performed in reverse sequence.

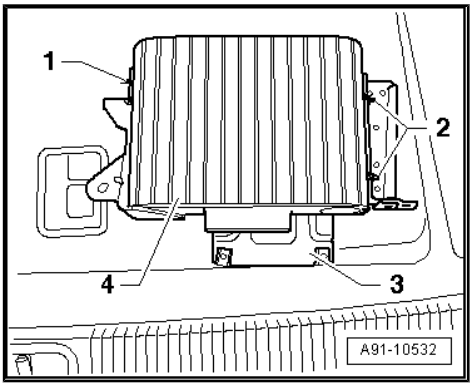

4.33 Removing and installing radio -R-

4.33.1 Standard/BOSE sound system (up to model year 2005)

Special tools and workshop equipment required

♦ Repair set for fibre optic cables -VAS 6223-

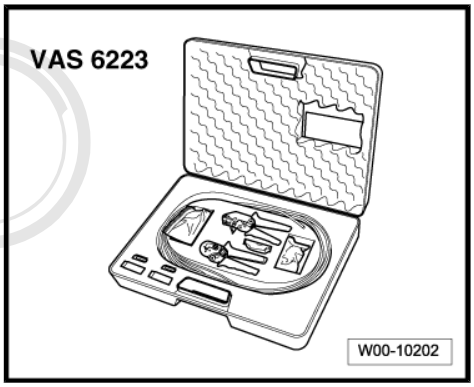

♦ Protective cap for cable connector -VAS 6223/9-

Protected by copyright. Copying for private or commercial purposes, in part or in whole, is not permitted unless authorised by AUDI AG. AUDI AG does not guarantee or accept any liability with respect to the correctness of information in this document. Copyright by AUDI AG.

– Switch off all electrical equipment.

– Remove ignition key.

– When renewing control unit, select “Replacement” function for appropriate control unit in “Guided Fault Finding”.

To do so, use the vehicle diagnostic, testing and information system -VAS 5051- .

Removing

– Remove luggage compartment side trim (left-side) ⇒ General body repairs, interior; Rep. Gr. 70 .

On vehicles with digital radio -R147- and digital TV tuner -R171- :

– Start by removing digital TV tuner -R171- ⇒ page 236 .

All vehicles

– Unbolt parking aid control unit -J446- - 1- ⇒ Electrical system; Rep. Gr. 94 .

– Unplug all connectors at radio -R- -2-.

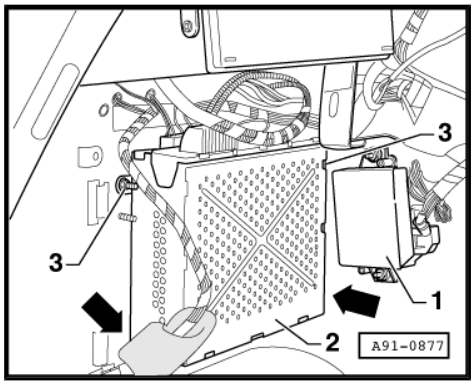

– Fit protective cap for cable connector -VAS 6223/9- -1- onto MOST bus connector -2-.

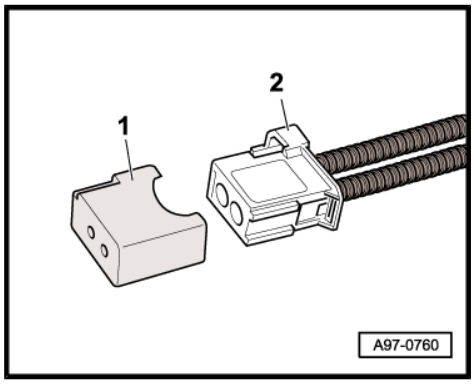

– Unscrew nuts -3- (3 Nm).

– Detach radio -R- -2- from studs -3- and pull retaining tabs on reverse side of radio -R- -arrows- out of retaining plate.

– Remove speech input control unit -J507- ⇒ page 271 .

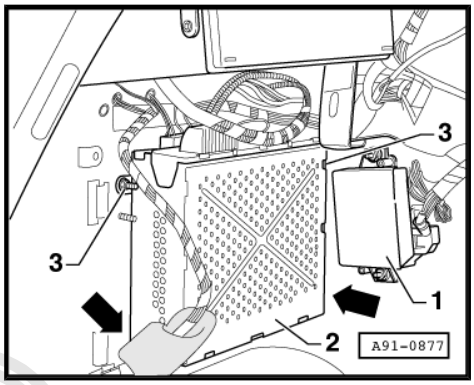

Installing

– Installation is performed in reverse sequence.

4.33.2 Bang & Olufsen sound system/all vehicles (from model year 2006 onwards, up to week 35/08)

Special tools and workshop equipment required

♦ Repair set for fibre optic cables -VAS 6223-

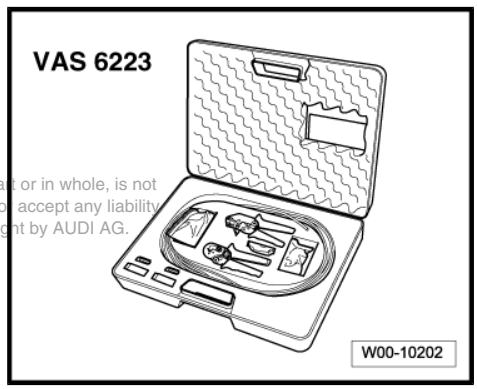

Protected by copyright. Copying for private or commercial purposes, in part or in whole, is not permitted unless authorised by AUDI AG. AUDI AG does not guarantee or accept any liability with respect to the correctness of information in this document. Copyright by AUDI AG.

♦ Protective cap for cable connector -VAS 6223/9-

– Switch off all electrical equipment.
– Remove ignition key.
– When renewing control unit, select “Replacement” function for appropriate control unit in “Guided Fault Finding”.

To do so, use the vehicle diagnostic, testing and information system -VAS 5051- .

Removing

– Open left-side luggage compartment storage area.

On vehicles with RSE remove bracket for rear DVD changer -R162- ⇒ page 307 .

First remove retainer with navigation system with CD drive control unit -J401- .

– Loosen bolt -1- (5 Nm) and unfasten nut -2- (5 Nm).

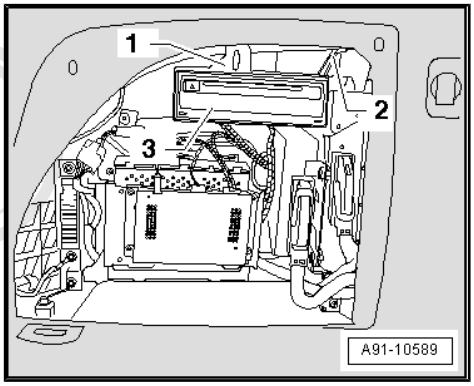

– Remove navigation system with CD drive control unit -J401- together with retainer -3- from storage space in luggage compartment and set down in luggage compartment.
– Unplug connectors -1-, -3- and -4- on radio -R- -5-.
– Unplug MOST Bus connector -2-.

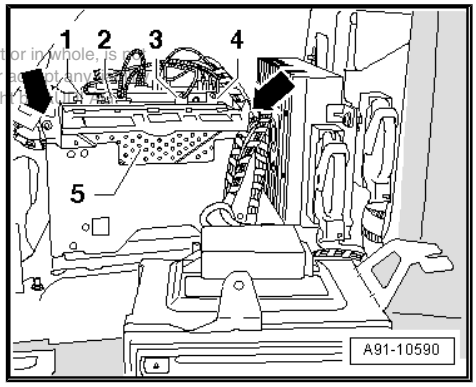

– Fit protective cap for cable connector -VAS 6223/9- -1- onto MOST bus connector -2-.

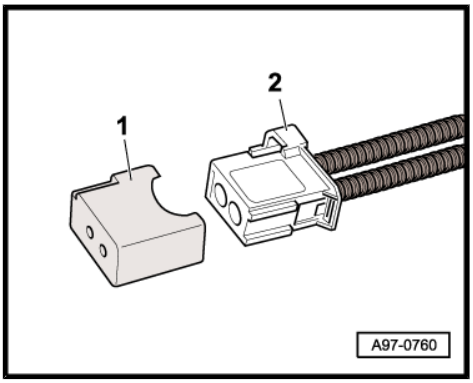

Protected by copyright. Copying for private or commercial purposes, in part or in whole, is not permitted unless authorised by Audi AG. Audi AG does not guarantee or accept any liability with respect to the correctness of information in this document. Copyright by Audi AG.

– Unscrew bolts -arrows- (3 Nm) and lift out radio -R- -5- from bracket.

– Remove speech input control unit -J507- ⇒ page 271 .

Installing

– Installation is performed in reverse sequence.

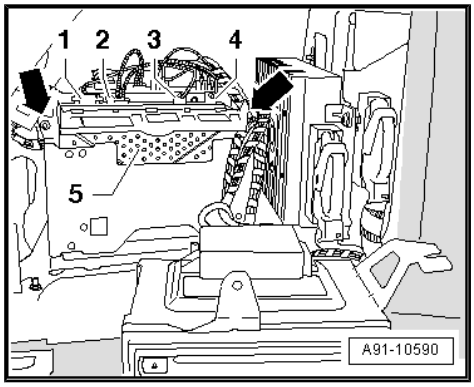

4.33.3 All vehicles (from week 36/08 onwards)

Special tools and workshop equipment required

♦ Repair set for fibre optic cables -VAS 6223-

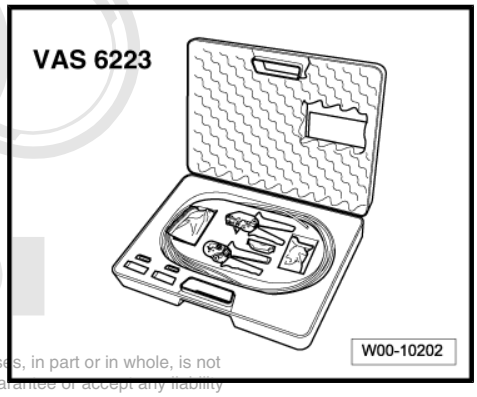

Protected by copyright. Copying for private or commercial purposes, in part or in whole, is not permitted unless authorised by AUDI AG. AUDI AG does not guarantee or accept any liability with respect to the correctness of information in this document. Copyright by AUDI AG.

♦ Protective cap for cable connector -VAS 6223/9-

– Switch off all electrical equipment.

– Remove ignition key.

– When renewing control unit, select “Replacement” function for appropriate control unit in “Guided Fault Finding”.

To do so, use the vehicle diagnostic, testing and information system -VAS 5051- .

Removing

– Open left-side luggage compartment storage area.

Remove bracket (parking aid control unit -J446-) -3- prior to removing radio -R- -1-.

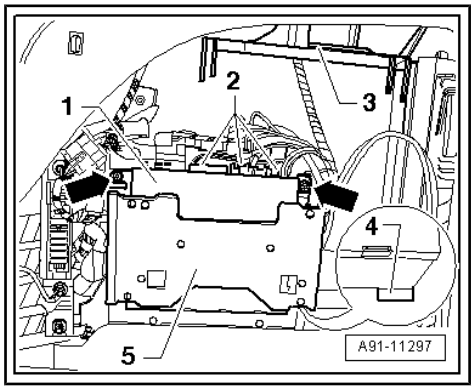

– Unscrew nut -1- (8 Nm) and bolt -2- (8 Nm) from bracket -3-.
– Swivel bracket -3- with parking aid control unit -J446- to one side.

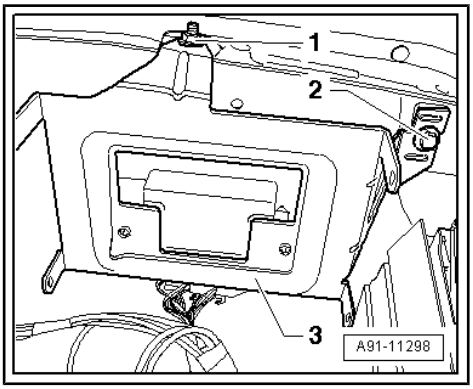

– Unplug connectors -2- at radio -R- -1-.

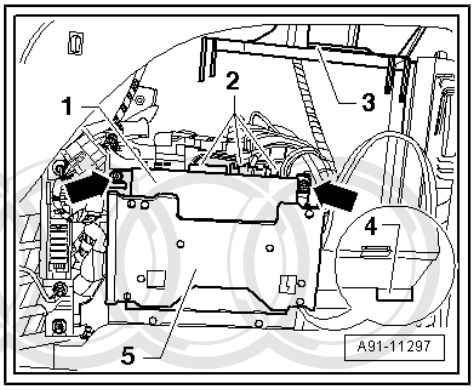

– Fit protective cap for cable connector -VAS 6223/9- -1- onto MOST bus connector -2-.

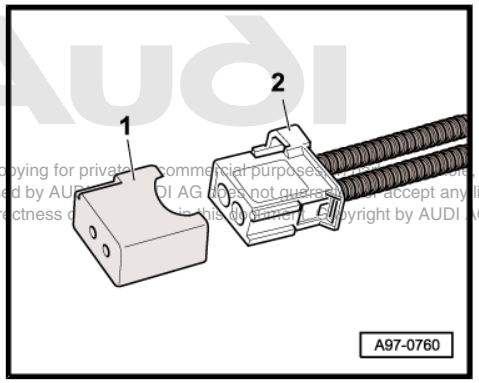

Protected by copyright. Copying for private or commercial purposes, in part or in whole, is not permitted unless authorised by AUDI AG. AUDI AG does not guarantee or accept any liability with respect to the correctness of information in this document. Copyright by AUDI AG.

– Unscrew bolts -arrows- (3 Nm) at radio -R- -1-.
– Pivot radio -R- -1- slightly towards luggage compartment.
– Lift radio -R- -1- out of bracket -5- and take it out.

Installing

– Installation is performed in reverse sequence.

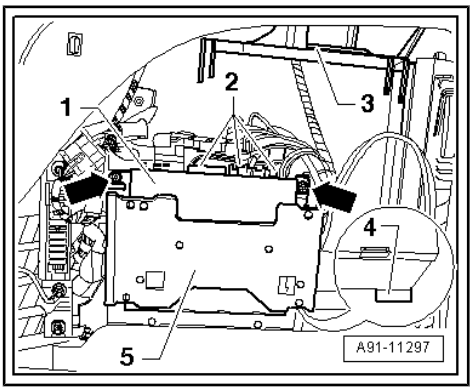

Make sure that “lugs” -4- engage properly in recesses in bracket -5-.

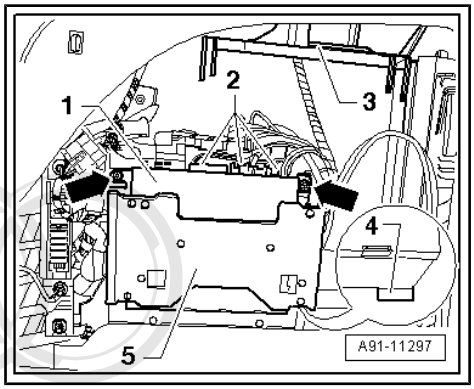

4.34 Removing and installing digital radio -R147- (up to week 35/08)

4.34.1 Standard/BOSE sound system (up to model year 2005)

Protected by copyright. Copying for private or commercial purposes, in part or in whole, is not permitted unless authorised by AUDI AG. AUDI AG does not guarantee or accept any liability with respect to the correctness of information in this document. Copyright by AUDI AG.

Special tools and workshop equipment required

- Repair set for fibre optic cables -VAS 6223-

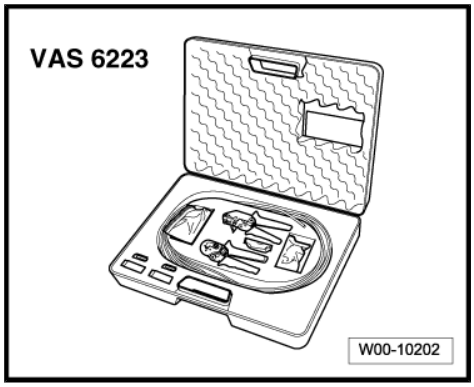

- Protective cap for cable connector -VAS 6223/9-

– Switch off all electrical equipment.

– Remove ignition key.

– When renewing control unit, select “Replacement” function for appropriate control unit in “Guided Fault Finding”.

To do so, use the vehicle diagnostic, testing and information system -VAS 5051- .

Removing

– Open left-side luggage compartment storage area.

On vehicles with digital radio -R147- and digital TV tuner -R171- :

– Start by removing digital TV tuner -R171- ⇒ page 236 .

All vehicles

– Unplug all connectors at digital radio -R147- .

– Fit protective cap for cable connector -VAS 6223/9- -1- onto MOST bus connector -2-.

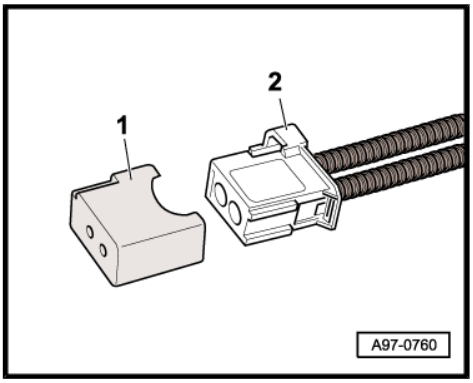

Protected by copyright. Copies for private or commercial purposes, in part or in whole, are not permitted unless authorised by AUDI AG. AUDI AG does not guarantee or accept any liability with respect to the correctness of information in this document. Copyright by AUDI AG.

– Unscrew the nuts -arrows- (3 Nm) on digital radio -R147- -1-.
– Remove digital radio -R147- -1- from retaining plate.

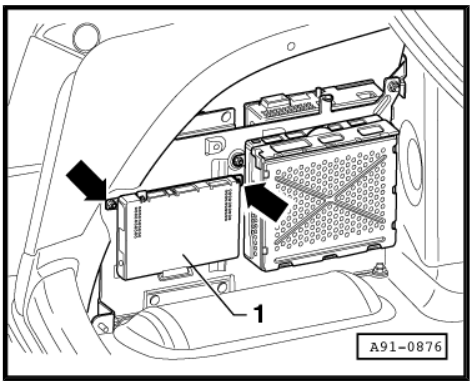

Installing

– Installation is performed in reverse sequence.

4.34.2 Bang & Olufsen sound system/all vehicles (from model year 2006 onwards)

Special tools and workshop equipment required

♦ Repair set for fibre optic cables -VAS 6223-

♦ Protective cap for cable connector -VAS 6223/9-

– Switch off all electrical equipment.
– Remove ignition key.
– When renewing control unit, select “Replacement” function for appropriate control unit in “Guided Fault Finding”.

To do so, use the vehicle diagnostic, testing and information system -VAS 5051- .

Removing

– Open flap for left-side luggage compartment storage area.

On vehicles with RSE remove bracket for rear DVD changer -R162- ⇒ page 307 .

– Unplug connectors -1- and -2- on digital radio -R147- -4-.
– Unplug MOST Bus connector -3-.

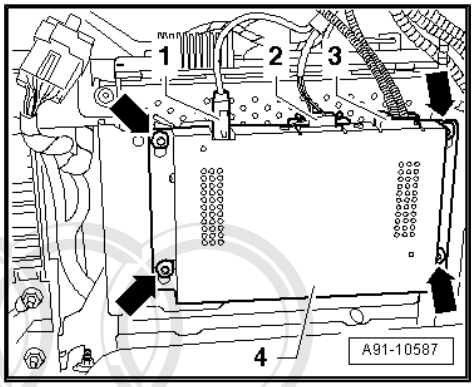

– Fit protective cap for cable connector -VAS 6223/9- -1- onto MOST bus connector -2-.

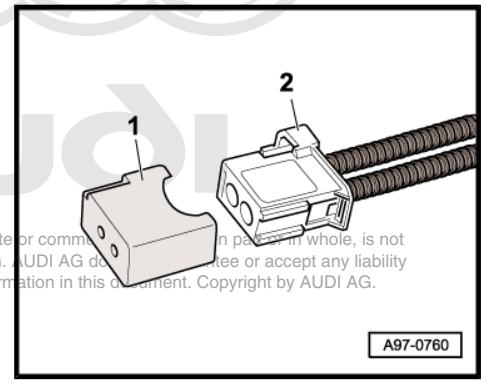

Protected by copyright. Copying for private or commercial purposes, in part or in whole, is not permitted unless authorised by AUDI AG. AUDI AG does not guarantee or accept any liability with respect to the correctness of information in this document. Copyright by AUDI AG.

– Unscrew bolts -arrows- (4 Nm) on digital radio -R147- -4-.
– Remove digital radio -R147- -4- from retaining plate.

Installing

– Installation is performed in reverse sequence.

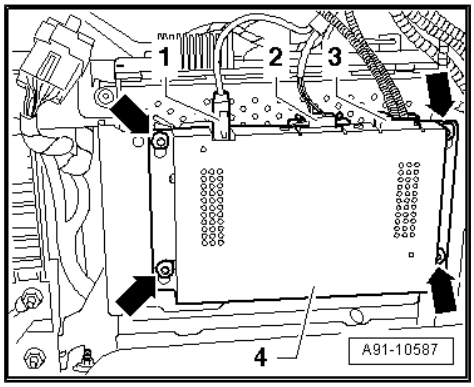

4.35 Removing and installing CD changer -R41- / CD player -R89-

The procedure for removing the drives in media player in position 1 -R118- and media player in position 2 -R119- is the same.

Special tools and workshop equipment required

♦ Radio release tool -T10057-

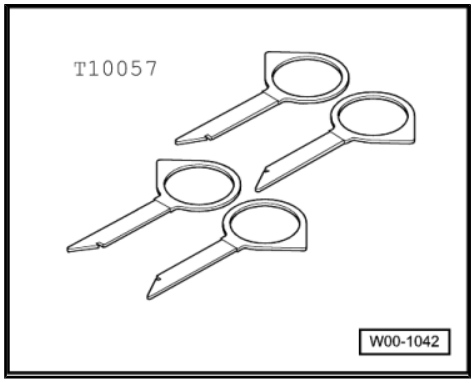

- Repair set for fibre optic cables -VAS 6223-

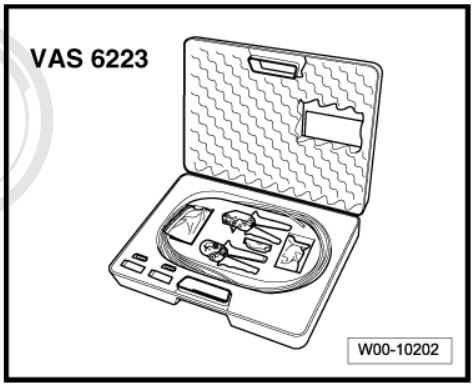

- Protective cap for cable connector -VAS 6223/9-

Copyright by AUDI AG. Copying for private or commercial purposes, in part or in whole, is not permitted unless authorised by AUDI AG. AUDI AG does not guarantee or accept any liability with respect to the correctness of information in this document. Copyright by AUDI AG.

Only on CD changer -R41- :

– When renewing control unit, select “Replacement” function for appropriate control unit in “Guided Fault Finding”.

To do so, use the vehicle diagnostic, testing and information system -VAS 5051- .

All

– Switch off all electrical equipment.

– Remove ignition key.

Removing

– Open glove box.

– Insert two radio release tools -T10057- into slots on CD changer -R41- until they engage. Pointed ends of grips must face outwards.

– Pull CD changer -R41- out of mounting frame.

– Unplug all electrical connectors at CD changer -R41- .

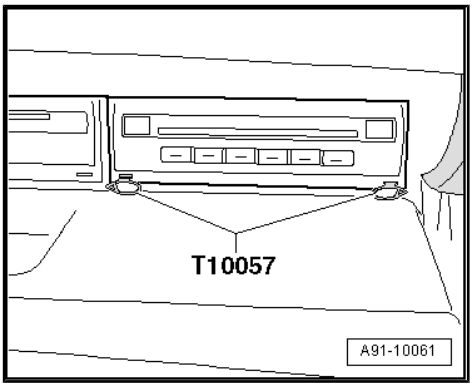

– Fit protective cap for cable connector -VAS 6223/9- -1- onto MOST bus connector -2-.

– Press release tabs on CD changer -R41- and remove radio release tool -T10057- .

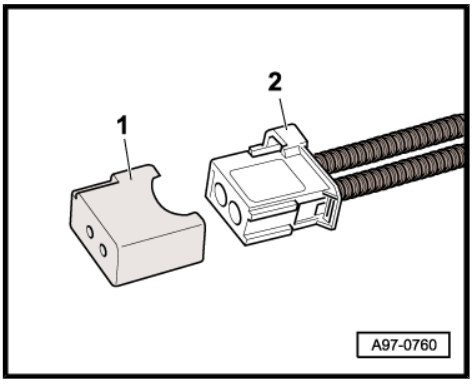

Installing

– Plug in connectors.

– Slide CD changer -R41- into mounting frame until it engages.

4.36 Removing and installing connection for external audio sources -R199- (up to week 35/08)

Special tools and workshop equipment required

♦ Radio release tool -T10057-

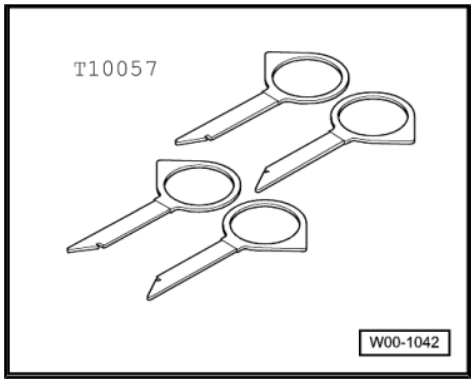

♦ Repair set for fibre optic cables -VAS 6223-

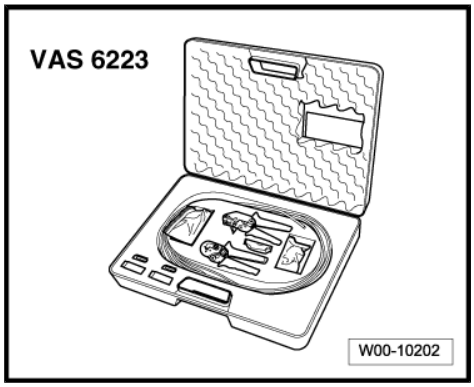

♦ Protective cap for cable connector -VAS 6223/9-

– Switch off all electrical equipment.

– Remove ignition key.

Removing

– Open glove box.

– Insert two radio release tools -T10057- into slots on connection for external audio sources -R199- until they engage. Pointed ends of grips must face outwards.

– Pull connection for external audio sources -R199- out of mounting frame.

– Unplug all connectors at connection for external audio sources -R199- .

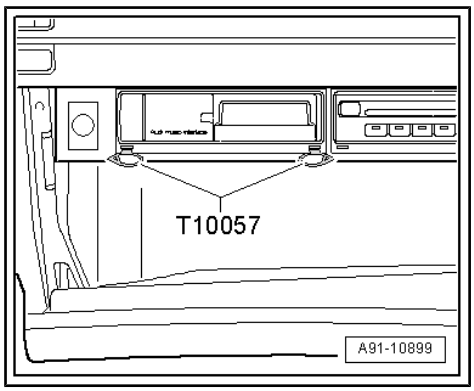

– Fit protective cap for cable connector -VAS 6223/9- -1- onto MOST bus connector -2-.

– Press release tabs on connection for external audio sources -R199- and remove radio release tool -T10057- .

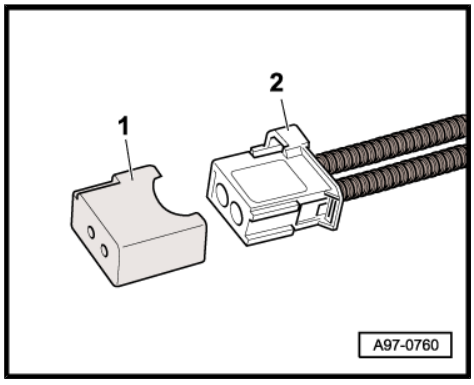

Removing internal control unit

Protected by copyright. Copying for private or commercial purposes, in part or in whole, is not permitted unless authorised by AUDI AG. AUDI AG does not guarantee or accept any liability with respect to the correctness of information in this document. Copyright by AUDI AG.

– Remove bolts -2- (2 Nm) on underside.

– Push tabs -4- and -5- downwards and upwards and slide control unit out of frame -1- to rear.

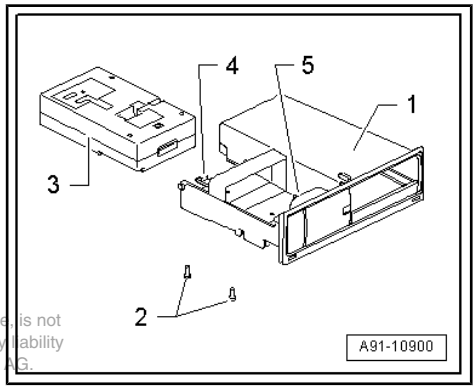

Installing

– Plug in all connectors.

– Push connection for external audio sources -R199- into mounting frame until it engages.

Protected by copyright. Copying for private or commercial purposes, in part or in whole, is not permitted unless authorised by AUDI AG. AUDI AG does not guarantee or accept any liability with respect to the correctness of information in this document. Copyright by AUDI AG.

4.37 Removing and installing aerial amplifier -R24- (up to week 35/08)

– Switch off all electrical equipment.

– Remove ignition key.

Removing

– Remove roof end trim ⇒ General body repairs, interior; Rep. Gr. 70 .

– Detach connector from aerial wires -1-.

– Unscrew earth cable -2- (9 Nm).

– Detach connector -4-.

– Release retainers -arrows- on both sides and remove the aerial amplifier -R24- -3-.

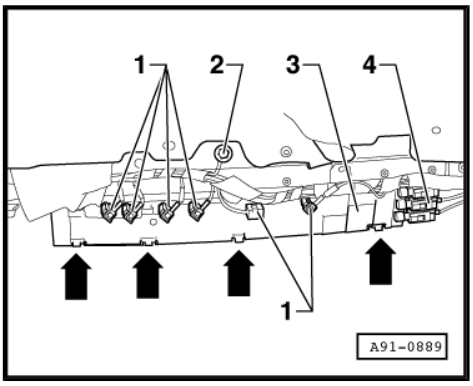

Installing

– Installation is performed in reverse sequence.

4.38 Removing and installing aerial amplifier -R24- (from week 36/08 onwards)

The aerial amplifier -R24- and aerial amplifier 2 -R111- are located behind the roof end trim.

The procedure for removing and installing the aerial amplifier -R24- and the aerial amplifier 2 -R111- is the same.

– Switch off all electrical equipment.

– Remove ignition key.

Removing

– Remove roof end trim ⇒ General body repairs, interior; Rep. Gr. 70 .

– Unplug connectors for aerial wires -3- and -4-.
– Unscrew earth connection -2- (9 Nm).
– Release retainers -arrows- on both sides and remove the aerial amplifier -R24- -1-.

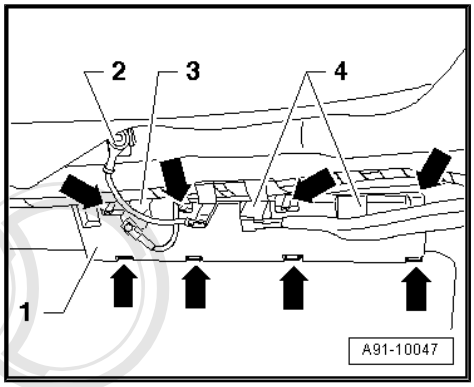

Installing

– Installation is performed in reverse sequence.

4.39 Removing and installing auxiliary heater aerial -R182-

The auxiliary heater aerial aerial -R182- is located behind the roof end trim (right-side).

– Switch off all electrical equipment.
– Remove ignition key.

Protected by copyright. Copying for private or commercial purposes, in part or in whole, is not permitted unless authorised by AUDI AG. AUDI AG does not guarantee or accept any liability with respect to the correctness of information in this document. Copyright by AUDI AG.

Removing

– Remove roof end trim ⇒ General body repairs, interior; Rep. Gr. 70 .
– Unplug connector for aerial wire -2-.
– Unscrew earth connection -1- (9 Nm).
– Release retaining tabs -arrows- on both sides and remove auxiliary heater aerial -R182- -3-.

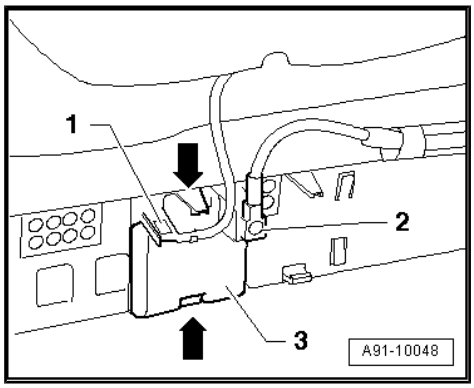

Installing

– Installation is performed in reverse sequence.

4.40 Removing and installing roof aerial -R216-

From model year 2003 onwards a roof aerial -R216- (telephone aerial -R65- / GPS aerial -R50-) is fitted.

– Switch off all electrical equipment.
– Remove ignition key.

Removing

– Remove roof end trim ⇒ General body repairs, interior; Rep. Gr. 70 .
– Remove C-pillar trim (left-side and right-side) ⇒ General body repairs, interior; Rep. Gr. 70 .
– Remove rear interior light -W43- ⇒ Electrical system; Rep. Gr. 96 .
– Pull down moulded headlining (rear) ⇒ General body repairs, interior; Rep. Gr. 70 .

– Unplug connectors of aerial wiring -1- and -2-.

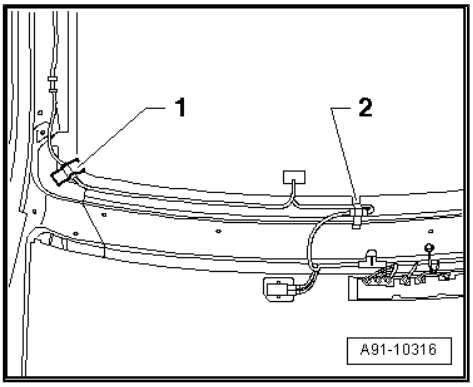

– Unscrew nut -2- (7 Nm).
– Lift roof aerial -R216- -1- off roof.

Installing

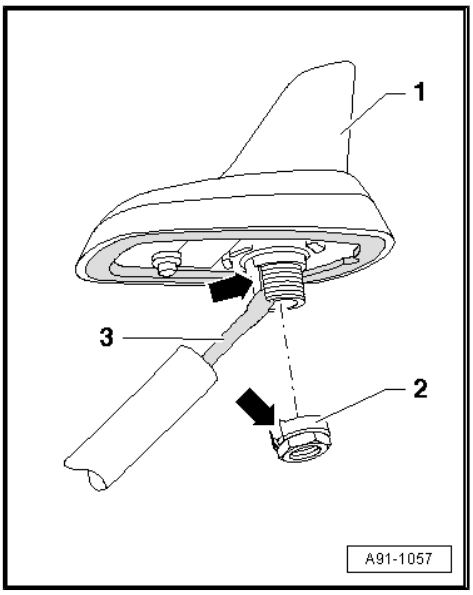

– Guide in aerial wiring -3- and carefully fit roof aerial -R216- -1- onto roof.
– Make sure that the aerial wiring -3- is fitted in the grooves -arrows- on the aerial base and securing nut so that it does not become pinched or crimped.
– Tighten nut evenly to 7 Nm.
– Make sure that the roof aerial -R216- is fitted evenly on the roof.
– Continue installation in reverse sequence.

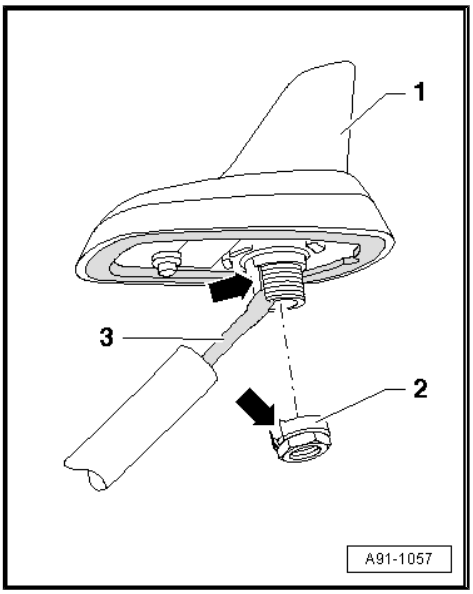

Protected by copyright. Copying for private or commercial purposes, in part or in whole, is not permitted unless authorised by AUDI AG. AUDI AG does not guarantee or accept any liability with respect to the correctness of information in this document. Copyright by AUDI AG.

4.41 Removing and installing roof aerial -R216- (USA)

– Switch off all electrical equipment.
– Remove ignition key.

Removing

– Remove roof end trim ⇒ General body repairs, interior; Rep. Gr. 70 .

– Remove C-pillar trim (left and right) ⇒ General body repairs, interior; Rep. Gr. 70 .

– Remove rear interior light -W43- ⇒ Electrical system; Rep. Gr. 96 .

– Pull down moulded headlining (rear) ⇒ General body repairs, interior; Rep. Gr. 70 .

– Unplug connectors of aerial wires -2- and -4-.

– Unscrew nut -3- (6 Nm).

– Lift radio, telephone and navigation system aerial -R52- off roof.

Protected by copyright. Copying for private or commercial purposes, in part or in whole, is not permitted unless authorised by AUDI AG. AUDI AG does not guarantee or accept any liability with respect to the correctness of information in this document. Copyright by AUDI AG.

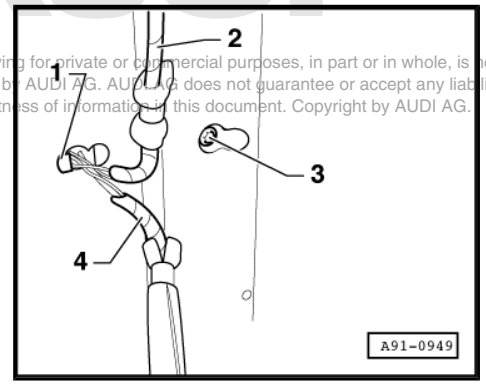

Installing

– Guide the aerial wires -2- and -4- through the roof.

– Make sure that the lug -1- engages properly in the opening in the roof.

– Perform further installation in reverse sequence.

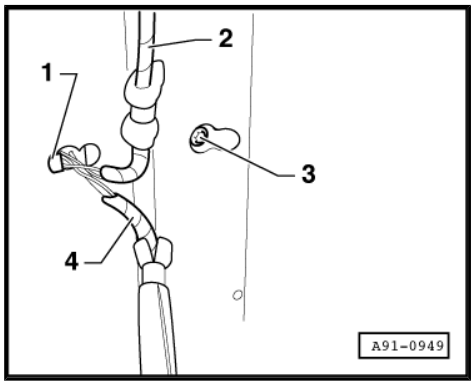

4.42 Removing and installing GPS aerial -R50-

On vehicles without telephone the navigation system aerial -R50- is located behind roof end trim (rear). If a telephone is fitted in addition, the navigation system aerial -R50- is integrated in the roof aerial.

– Switch off all electrical equipment.

– Remove ignition key.

Removing

– Remove roof end trim ⇒ General body repairs, interior; Rep. Gr. 70 .

– Unplug connectors -2- and -3- on navigation system aerial -R50- .
– Release retainers -arrows- and detach GPS aerial -R50- -1-.

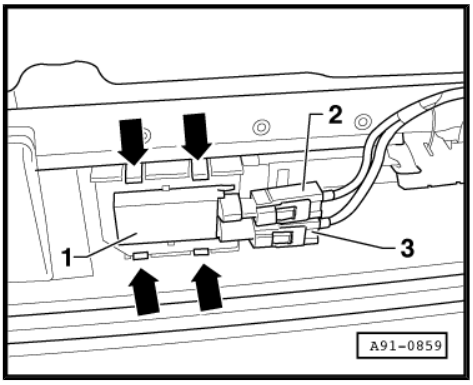

Installing

– Installation is performed in reverse sequence.

Protected by copyright. Copying for private or commercial purposes, in part or in whole, is not permitted unless authorised by AUDI AG. AUDI AG does not guarantee or accept any liability with respect to the correctness of information in this document. Copyright by AUDI AG.

5 Radio system (USA)

5.1 General notes (up to week 21/09)

The radio system is part of the communication system. A standard “radio set” is no longer fitted. Instead the radio -R- consists of a radio tuner with additional plug-in positions located at rear left of luggage compartment.

In addition, a satellite radio -R146- (SDARS) can be fitted.

The multimedia system operating unit -E380- is used for operation. The signals to the multimedia system operating unit -E380- and the digital sound package control unit -J525- are transmitted via the MOST Bus.

The signals from rear window aerial reach the radio -R- via the aerial amplifier -R24- with integrated aerial selection control unit -J515- .

The SDARS signals reach the satellite radio -R146- via the radio, telephone and navigation system aerial -R52- (Ter/Sat/GPS/additional GSM).

As an option, the following may be installed in the glove box: CD changer -R41- / CD player -R89- / MiniDisc player -R153- / connection for external audio sources -R199- .

Fault finding is performed via the “Guided Fault Finding” function using ⇒ Vehicle diagnosis, testing and information system VAS 5051.

Repairing aerial wiring ⇒ Electrical system; Rep. Gr. 97 .

Servicing fibre optic cables ⇒ Electrical system; Rep. Gr. 97

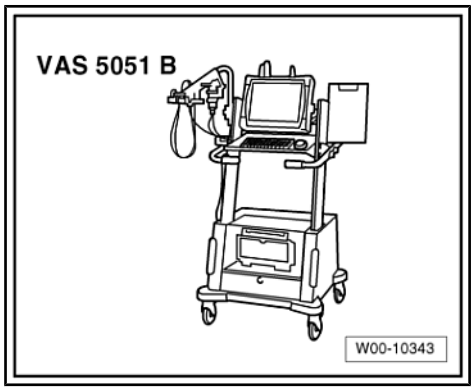

5.2 General notes (from week 22/09 onwards)

The radio system is part of the third-generation MMI infotainment system, and it is linked to the control unit 1 for information electronics -J794- via the MOST bus.

Protected by copyright. Copying for private or commercial purposes, in part or in whole, is not permitted unless authorised by AUDI AG. AUDI AG does not guarantee or accept any liability with respect to the correctness of information in this document. Copyright by AUDI AG.

The Standard sound system is directly connected to the radio -R- and, depending on the equipment version, the analogue tuner and SDARS tuner are located in the radio -R- .

Sound systems:

- BOSE
- Bang and Olufsen

Layout of radio -R- (MMI)

Depending on the equipment version, the radio -R- contains the following control units known from the second generation:

1 - Digital sound package control unit -J525-

2 - Radio -R-

3 - Radio -R- AM/FM tuner

4 - Satellite radio -R146-

5 - Not fitted

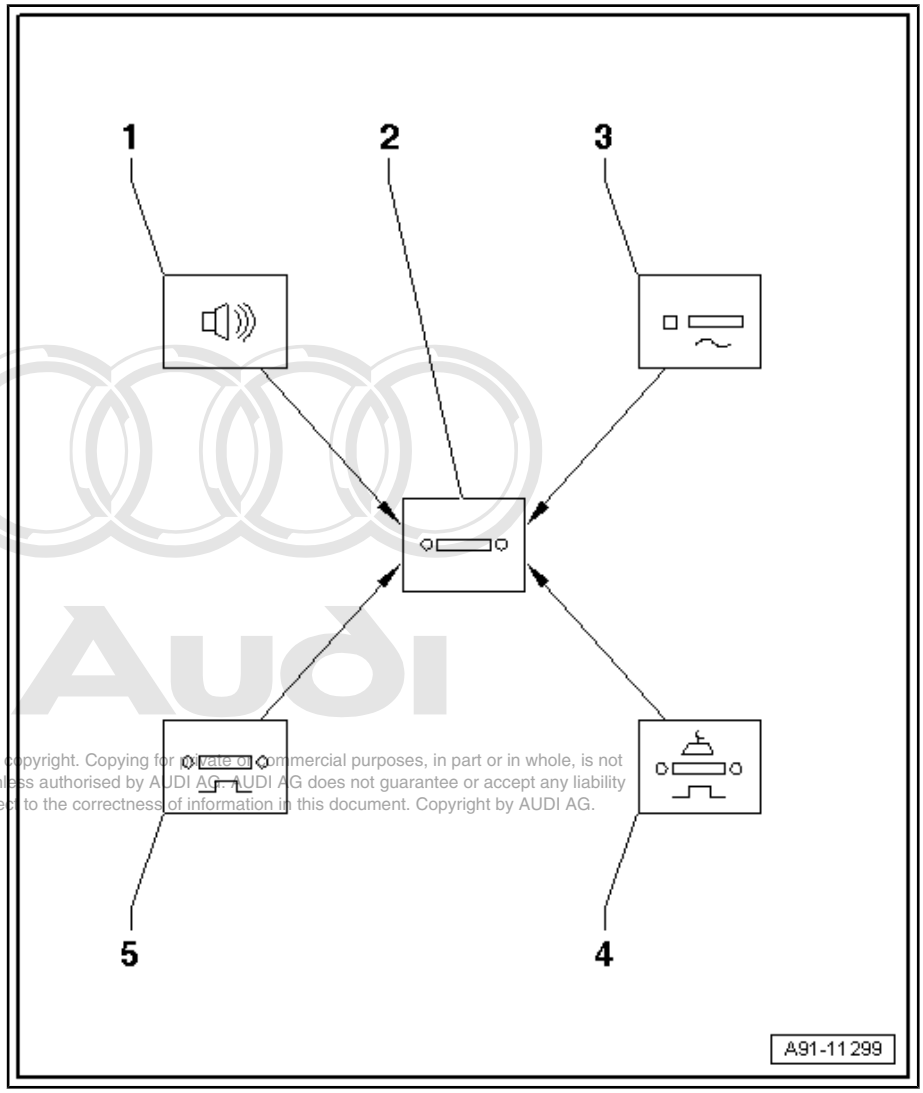

Protected by copyright. Copying for private or commercial purposes, in part or in whole, is not permitted unless authorised by AUDI AG. AUDI AG does not guarantee or accept any liability with respect to the correctness of information in this document. Copyright by AUDI AG.

5.3 BOSE/BOSE 6000 radio system (up to week 21/09) - layout

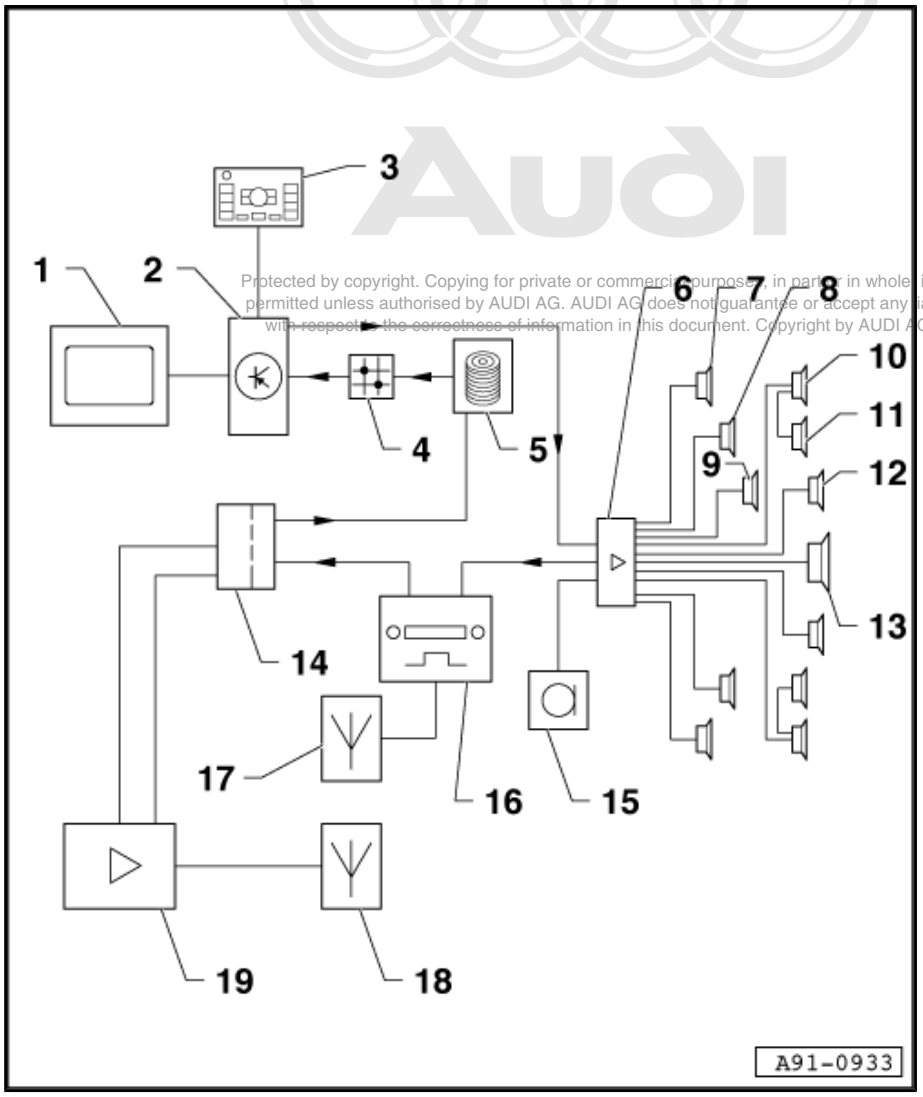

Protected by copyright. Copying for private or commercial purposes, in part or in whole, is not permitted unless authorised by AUDI AG. AUDI AG does not guarantee or accept any liability with respect to the correctness of information in this document. Copyright by AUDI AG.

1 - Display unit for front information display and operating unit control unit -J685- in dash panel (centre)

2 - Control unit for front display and information control panel -J523- behind glove box

3 - Multimedia system operating unit -E380- in centre console (bottom)

4 - Data bus diagnostic interface -J533- behind glove box

5 - Media player in position 1 -R118- / media player in position 2 -R119- in glove box

6 - Digital sound package control unit -J525- behind luggage compartment side trim (left-side)

7 - Front left bass loudspeaker -R21- / front right bass loudspeaker -R23- in front doors (bottom)

8 - Front left mid-range and treble loudspeaker -R26- / front right mid-range and treble loudspeaker -R27- in dash panel (front left and front right)

9 - Centre mid-range and treble loudspeaker -R158- in dash panel (front centre)

10 - Rear left mid-range and bass loudspeaker -R159- / rear right mid-range and bass loudspeaker -R160- in rear doors (bottom)

11 - Rear left treble loudspeaker -R14- / rear right treble loudspeaker -R16- in rear doors (top)

12 - Loudspeaker in rear shelf -R150- in rear shelf (left and right)

13 - Subwoofer in rear shelf -R157- in rear shelf (centre)

14 - Radio -R- located behind luggage compartment side trim (left-side)

15 - Microphone unit in front roof module -R164- in front interior light -W1-

16 - Satellite radio -R146- located behind luggage compartment side trim (left-side)

17 - Radio, telephone and navigation system aerial -R52- (Ter/SAT/GPS/additional GSM)

18 - Rear window aerials

19 - Aerial amplifier -R24- behind roof end trim (left-side)

5.4 BOSE 6000 sound system (from week 22/09 onwards) - layout

1 - Digital sound package control unit -J525- behind luggage compartment side trim (left-side)

2 - Front left bass loudspeaker -R21- / front right bass loudspeaker -R23- in front doors (bottom)

3 - Front left mid-range and treble loudspeaker -R26- / front right mid-range and treble loudspeaker -R27- in dash panel (left and right)

4 - Rear left mid-range and bass loudspeaker -R159- / rear right mid-range and bass loudspeaker -R160- in rear doors (bottom)

5 - Rear left treble loudspeaker -R14- / rear right treble loudspeaker -R16- in rear doors (top)

6 - Loudspeaker in rear shelf -R150- in left and right of rear shelf

7 - Subwoofer in rear shelf -R157- in rear shelf (centre)

8 - Centre mid-range and treble loudspeaker -R158- in dash panel (centre)

9 - Microphone unit in front roof module -R164- in front interior light -W1-

10 - MOST bus

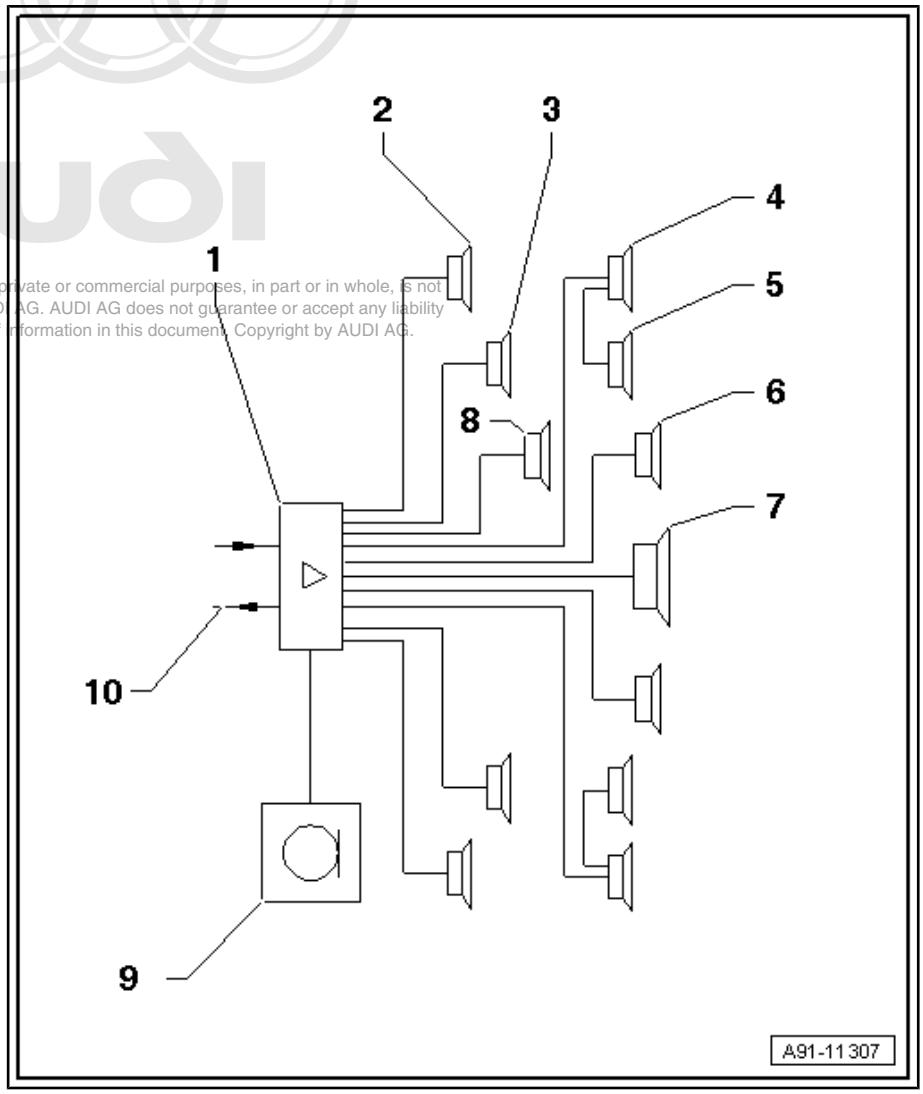

Protected by copyright. Copying for private or commercial purposes, in part or in whole, is not permitted unless authorised by AUDI AG. AUDI AG does not guarantee or accept any liability with respect to the correctness of information in this document. Copyright by AUDI AG.

5.5 Bang & Olufsen sound system

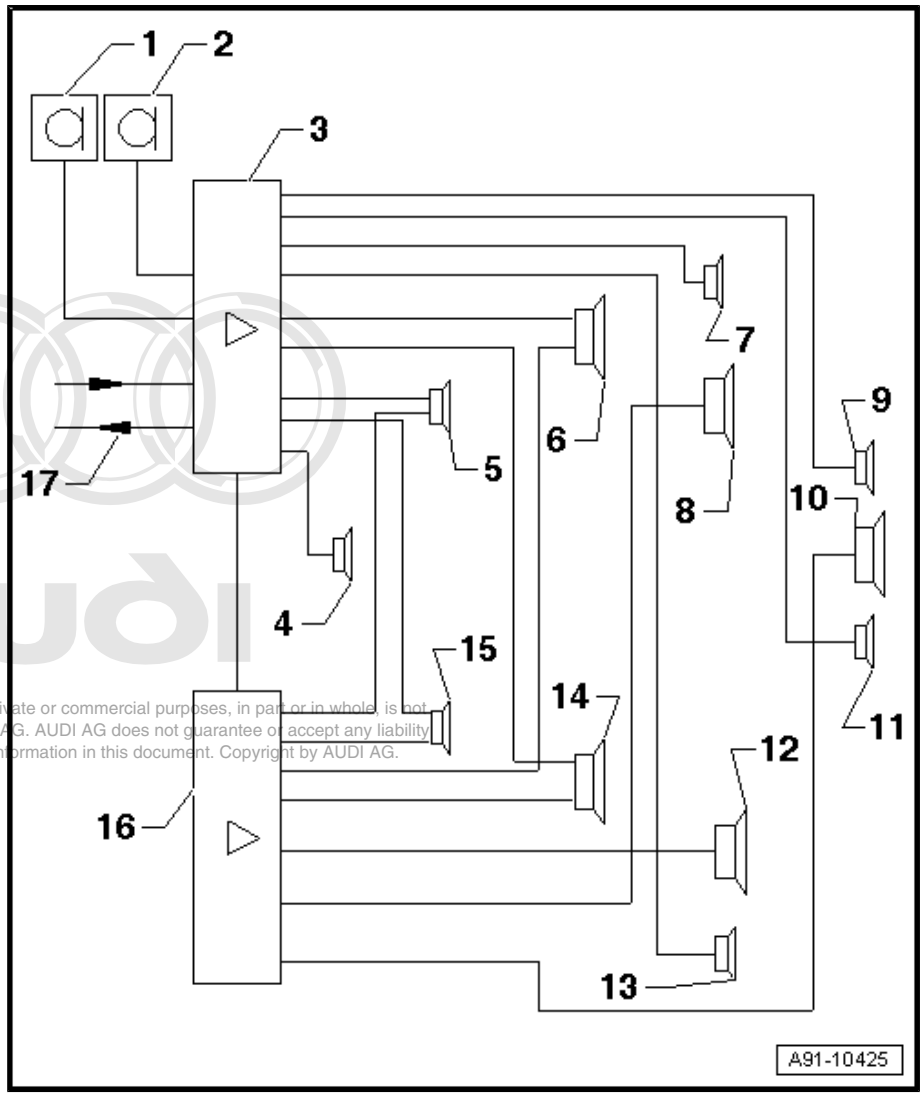

1 - Microphone unit in front roof module -R164- in front interior light -W1-

2 - Microphone unit in front roof module -R164- in front interior light -W1-

3 - Digital sound package control unit -J525- behind luggage compartment side trim (left-side)

4 - Centre mid-range and treble loudspeaker -R158- in dash panel (centre)

5 - Front left treble loudspeaker -R20- in dash panel (left-side)

6 - Front left bass loudspeaker -R21- / front left mid-range loudspeaker -R103- in front door (bottom)

7 - Rear left treble loudspeaker -R14- in rear door (top)

8 - Rear left mid-range and bass loudspeaker -R159- in rear door (bottom)

9 - Rear left mid-range loudspeaker -R105- in rear shelf (left-side)

10 - Subwoofer in rear shelf -R157- in rear shelf (centre)

11 - Rear right mid-range loudspeaker -R106- in rear shelf (right-side)

12 - Rear right mid-range and bass loudspeaker -R160- in rear door (bottom)

13 - Rear right treble loudspeaker -R16- in rear door (top)

14 - Front right bass loudspeaker -R23- / front right mid-range loudspeaker -R104- in front door (bottom)

15 - Front right treble loudspeaker -R22- in dash panel (right-side)

16 - Digital sound package control unit 2 -J787- behind luggage compartment side trim (left-side)

17 - MOST bus

Protected by copyright. Copying for private or commercial purposes, in part or in whole, is not permitted unless authorised by AUDI AG. AUDI AG does not guarantee or accept any liability with respect to the correctness of information in this document. Copyright by AUDI AG.

5.6 Connectors on satellite radio -R146- (up to week 21/09)

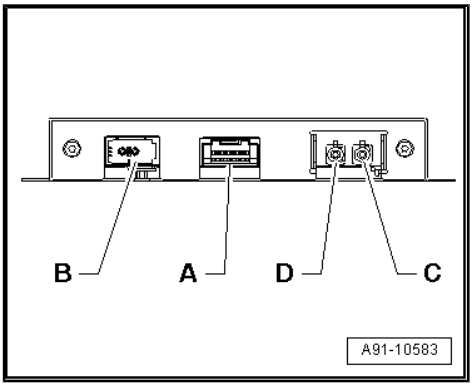

Satellite radio -R146-

A - Multi-pin connector, 8-pin, black

B - MOST bus

C - Connection SAT (green) from radio, telephone and navigation system aerial -R52-

D - Connection Ter. (brown) from radio, telephone and navigation system aerial -R52- (up to 10/06)

Note

Contacts which are not listed are not used.

A - Multi-pin connector, 8-pin, black

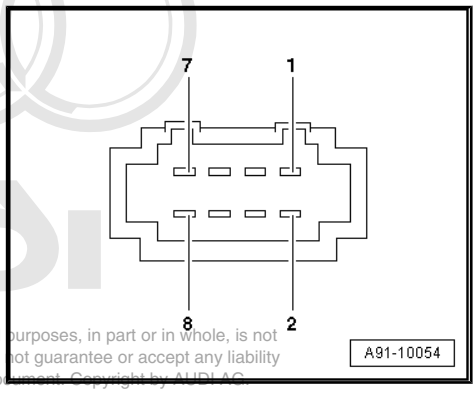

1 - Terminal 31

2 - Terminal 30

5 - Open circuit diagnostic lead

Protected by copyright. Copying for private or commercial purposes, in part or in whole, is not permitted unless authorised by AUDI AG. AUDI AG does not guarantee or accept any liability with respect to the correctness of information in this document. Copyright by AUDI AG.

B - MOST bus

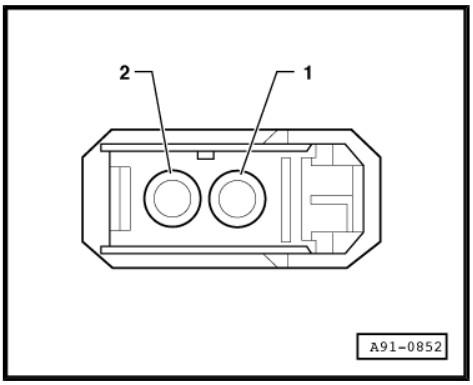

1 - Input

2 - Output

5.7 Connectors on radio -R- (from week 22/09 onwards)

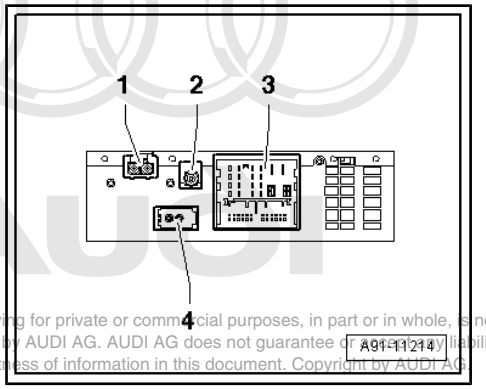

Protected by copyright. Copying for private or commercial purposes, in part or in whole, is not permitted unless authorised by AUDI AG. AUDI AG does not guarantee or accept any liability with respect to the correctness of information in this document. Copyright by AUDI AG.

Radio -R-

1 - Connection (AM/FM1/FM2), white, from aerial amplifier -R24- / aerial amplifier 2 -R111-

2 - Connection (SAT), black, from roof aerial -R216-

3 - Connection block with four multi-pin connectors

4 - MOST bus

Note

Contacts which are not listed are not used.

1 - Aerial connection (AM/FM1/FM2)

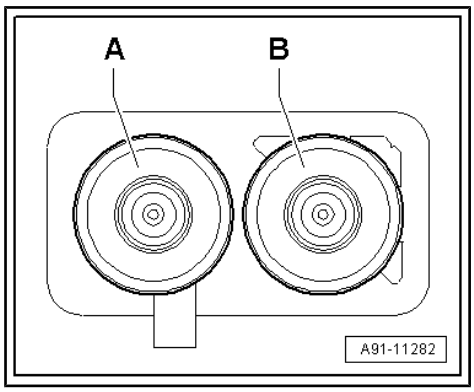

A - Contact 2 (AM/FM1) from aerial amplifier -R24- (radio aerial 2 -R93-)

B - Contact 1 (FM2) from aerial amplifier 2 -R111- (aerial -R11-)

A - Multi-pin connector, 8-pin, brown (T8ai)

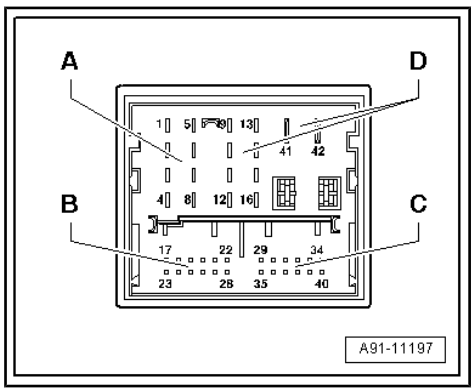

1 - Loudspeaker (+), rear right

2 - Loudspeaker (+), front right

3 - Loudspeaker (+), front left

4 - Loudspeaker (+), rear left

5 - Loudspeaker (–), rear right

6 - Loudspeaker (–), front right

7 - Loudspeaker (–), front left

8 - Loudspeaker (–), rear left

B - Multi-pin connector, 12-pin, blue (T12ao)

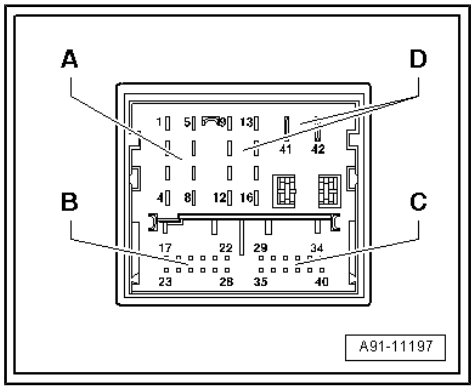

17 - NF in, left-side (low frequency)

18 - NF in, earth (low frequency)

19 - NF in, diag (low frequency)

21 - NF diag (low frequency)

22 - NF (low frequency) (–)

23 - NF in, right-side (low frequency)

24 - NF in, screen earth (low frequency)

27 - NF screen earth (low frequency)

28 - NF (low frequency) (+)

C - Multi-pin connector, 12-pin

29 - Headphones output 1 (diag)

31 - Headphones output 1/2 (diag)

34 - Headphones output 2 (diag)

35 - Headphones output 1 (left)

36 - Headphones output 1 (earth)

37 - Headphones output 1 (right)

38 - Headphones output 2 (left)

39 - Headphones output 2 (earth)

40 - Headphones output 1 (right)

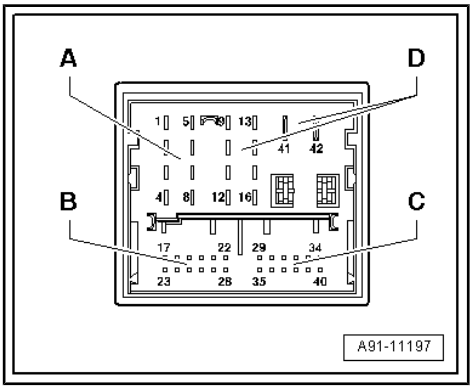

D - Multi-pin connector, 10-pin, black (T10w)

11 - Open circuit diagnostic lead

41 - Terminal 31

42 - Terminal 30

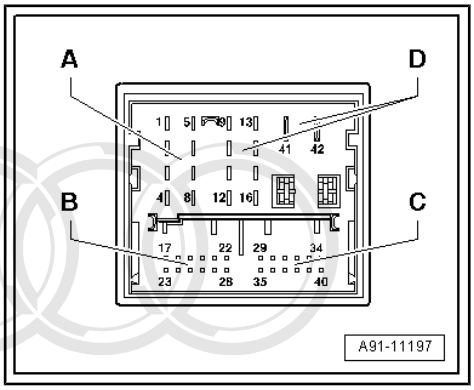

4 - MOST bus

1 - Input

2 - Output

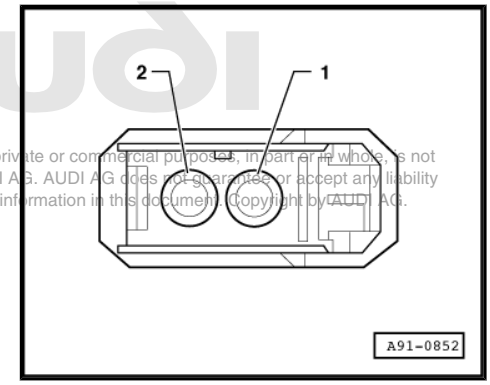

Protected by copyright. Copying for private or commercial purposes, in part or in whole, is not permitted unless authorised by AUDI AG. AUDI AG does not guarantee or accept any liability with respect to the correctness of information in this document. Copyright by AUDI AG.

5.8 Overview of fitting locations

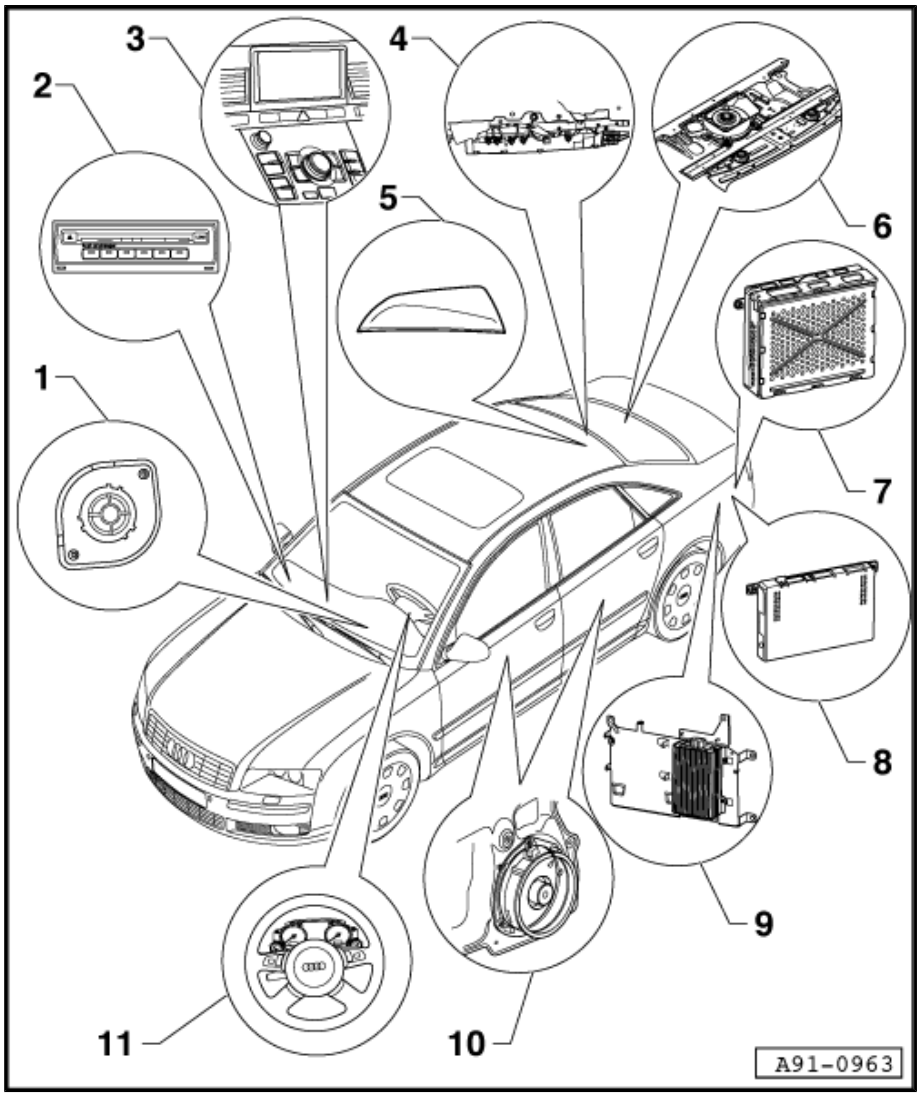

1 - Loudspeakers in dash panel

- ❑ Removing and installing ⇒ page 95
- ❑ Removing and installing (Bang & Olufsen) ⇒ page 95

2 - Media player in position 1 -R118- (up to week 21/09)

- ❑ In glove box

CD changer -R41-

- ❑ Pin assignment ⇒ page 80
- ❑ Removing and installing ⇒ page 116

CD player -R89-

- ❑ Pin assignment ⇒ page 80
- ❑ Removing and installing ⇒ page 116

MiniDisc player -R153-

- ❑ Pin assignment ⇒ page 81
- ❑ Removing and installing ⇒ page 116

Connection for external audio sources -R199- (AMI)

- ❑ Pin assignment ⇒ page 82
- ❑ Removing and installing ⇒ page 117

- Control unit 1 for information electronics -J794- (from week 22/09 onwards)

- ❑ In glove box
- ❑ Pin assignment ⇒ page 37
- ❑ Removing and installing ⇒ page 21

- Media player in position 2 -R119-

- ❑ In glove box

CD changer -R41-

- ❑ Pin assignment ⇒ page 80
- ❑ Removing and installing ⇒ page 116

CD player -R89-

- ❑ Pin assignment ⇒ page 80
- ❑ Removing and installing ⇒ page 116

Protected by copyright. Copying for private or commercial purposes, in part or in whole, is not permitted unless authorised by AUDI AG. AUDI AG does not guarantee or accept any liability with respect to the correctness of information in this document. Copyright by AUDI AG.

Connection for external audio sources -R199- (interface)

- ❑ From week 36/08 onwards
- ❑ Pin assignment ⇒ page 83

3 - Display unit for front information display and operating unit control unit -J685-

- In dash panel (centre)

- Multimedia system operating unit -E380-

- In centre console (bottom)

4 - Aerial amplifier -R24-

- Behind roof end trim (left-side)
- Overview ⇒ page 85

5 - Radio, telephone and navigation system aerial -R52-

- Roof aerial
- Overview ⇒ page 85

Protected by copyright. Copying for private or commercial purposes, in part or in whole, is not permitted unless authorised by AUDI AG. AUDI AG does not guarantee or accept any liability with respect to the correctness of information in this document. Copyright by AUDI AG.

6 - Loudspeakers in rear shelf

- Removing and installing ⇒ page 96
- Removing and installing (Bang & Olufsen) ⇒ page 97

7 - Radio -R-

- Behind luggage compartment side trim (left-side)
- Pin assignment (up to week 21/09) ⇒ page 70
- Pin assignment (from week 22/09 onwards) ⇒ page 130
- Removing and installing (up to week 21/09) ⇒ page 109
- Removing and installing (from week 22/09 onwards) ⇒ page 112

8 - Satellite radio -R146- (up to week 21/09)

- Behind luggage compartment side trim (left-side)
- Pin assignment ⇒ page 129
- Removing and installing (up to model year 2005) ⇒ page 134
- Removing and installing (from model year 2006 onwards, up to week 21/09) ⇒ page 135
- Removing and installing (vehicles with RSE "light") ⇒ page 136

9 - Digital sound package control unit -J525-

- Behind luggage compartment side trim (left-side)
- Pin assignment (BOSE) ⇒ page 74
- Removing and installing (BOSE) (up to model year 2005) ⇒ page 102
- Removing and installing (BOSE) (from model year 2006 onwards) ⇒ page 104
- Pin assignment (BOSE 6000) ⇒ page 75
- Removing and installing (BOSE 6000) ⇒ page 105
- Pin assignment (Bang & Olufsen) ⇒ page 77
- Removing and installing (Bang & Olufsen) ⇒ page 106

- Digital sound package control unit 2 -J787-

- Only on Bang & Olufsen
- Pin assignment ⇒ page 78
- Removing and installing ⇒ page 108

10 - Loudspeakers in doors

- Removing and installing ⇒ page 92
- Removing and installing (Bang & Olufsen) ⇒ page 93

11 - Multi-function steering wheel

- Removing and installing buttons ⇒ page 255

5.9 Removing and installing satellite radio - R146- (up to model year 2005)

Special tools and workshop equipment required

- Repair set for fibre optic cables -VAS 6223-

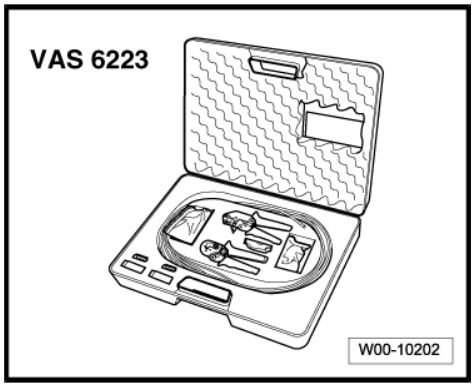

- Protective cap for cable connector -VAS 6223/9-

– When renewing control unit, select “Replacement” function for appropriate control unit in “Guided Fault Finding”.

To do so, use the vehicle diagnostic, testing and information system -VAS 5051- .

– Switch off all electrical equipment.

– Remove ignition key.

Removing

– Open left-side luggage compartment storage area.

– Unplug connectors -1-, -2- and -3- on satellite radio -R146- -4-.

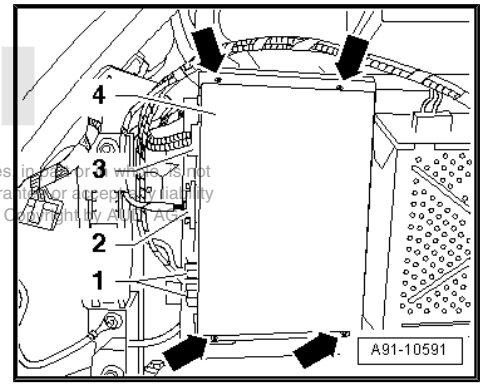

Protected by copyright. Copying for private or commercial purposes, in part or in whole, is not permitted unless authorised by AUDI AG. AUDI AG does not guarantee or accept any liability with respect to the correctness of information in this document. Copyright by AUDI AG.

– Fit protective cap for cable connector -VAS 6223/9- -1- onto MOST bus connector -2-.

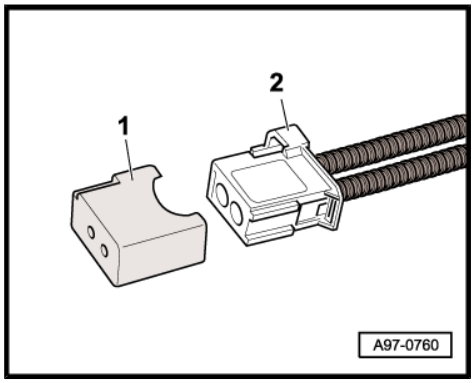

– Unscrew nuts -arrows- (4 Nm) on satellite radio -R146- -4-.
– Remove satellite radio -R146- -4- from retaining plate.

Installing

– Installation is performed in reverse sequence.

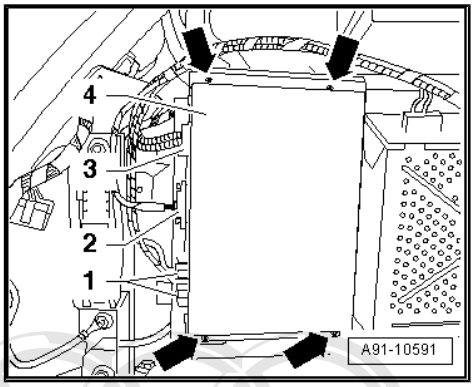

5.10 Removing and installing satellite radio -R146- (from model year 2006 onwards, up to week 21/09)

Special tools and workshop equipment required

♦ Repair set for fibre optic cables -VAS 6223-

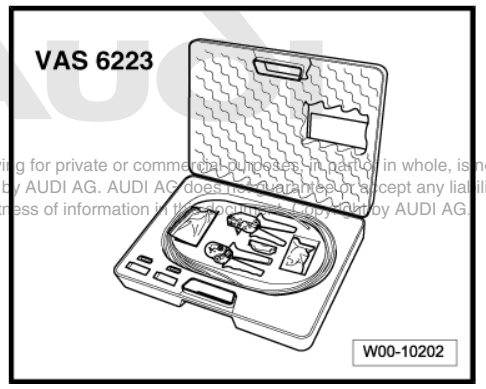

Protected by copyright. Copying for private or commercial purposes, in part or in whole, is not permitted unless authorised by AUDI AG. AUDI AG does not guarantee or accept any liability with respect to the correctness of information in this document. Copyright by AUDI AG.

♦ Protective cap for cable connector -VAS 6223/9-

– When renewing control unit, select “Replacement” function for appropriate control unit in “Guided Fault Finding”.

To do so, use the vehicle diagnostic, testing and information system -VAS 5051- .

– Switch off all electrical equipment.
– Remove ignition key.

Removing

– Open flap for left-side luggage compartment storage area.
– Unplug connectors -1-, -2- and -3- on satellite radio -R146- -5-.
– Unplug MOST Bus connector -4-.

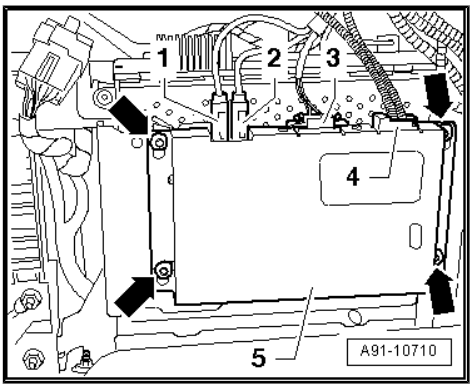

– Fit protective cap for cable connector -VAS 6223/9- -1- onto MOST bus connector -2-.

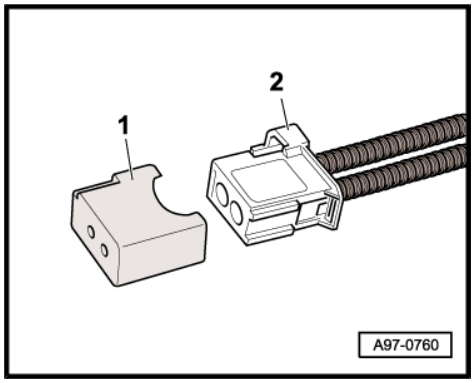

– Unscrew bolts -arrows- (4 Nm) on satellite radio -R146- -5-.
– Remove digital radio -R147- -5- from retaining plate.

Installing

– Installation is performed in reverse sequence.

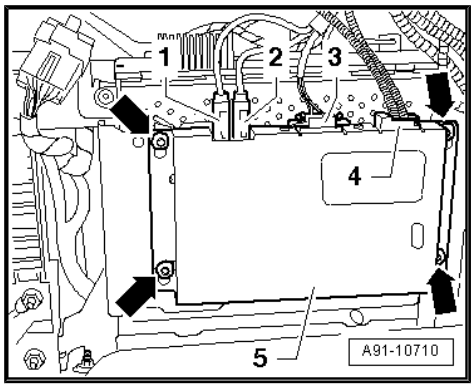

5.11 Removing and installing satellite radio -R146- on vehicles with RSE "light"

Special tools and workshop equipment required

♦ Repair set for fibre optic cables -VAS 6223-

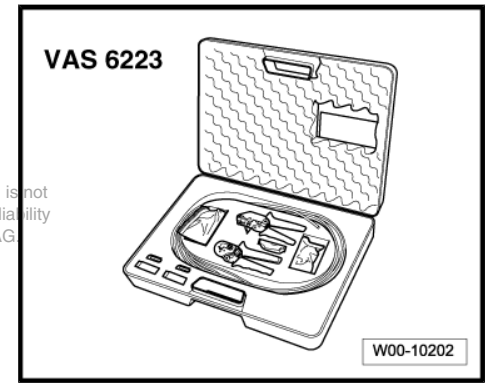

Protected by copyright. Copying for private or commercial purposes, in part or in whole, is not permitted unless authorised by AUDI AG. AUDI AG does not guarantee or accept any liability with respect to the correctness of information in this document. Copyright by AUDI AG.

♦ Protective cap for cable connector -VAS 6223/9-

– When renewing control unit, select “Replacement” function for appropriate control unit in “Guided Fault Finding”.

To do so, use the vehicle diagnostic, testing and information system -VAS 5051- .

– Switch off all electrical equipment.
– Remove ignition key.

Removing

In order to remove satellite radio -R146- , mounting frame together with rear DVD changer -R162- and multimedia system signal splitter -R181- have to be removed first.

From model year 2007 onwards it is only necessary to remove bracket for rear DVD changer -R162- ⇒ page 341 . Further re-

moval steps are performed according to instructions for model year 2006 ⇒ page 135 .

– Remove luggage compartment side trim (left-side) ⇒ General body repairs, interior; Rep. Gr. 70 .
– Unscrew bolt -2- (3 Nm).
– Remove navigation system with CD drive control unit -J401- together with mounting frame -1- ⇒ page 201 .

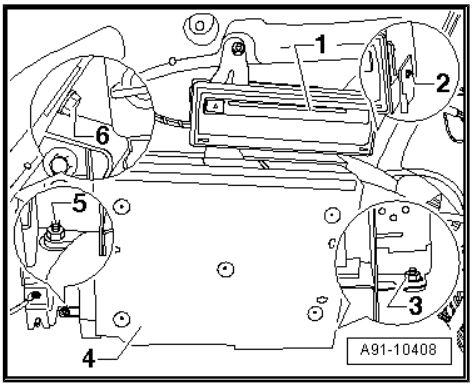

– Unscrew nuts -3-, -5- and -6- (3 Nm) on mounting frame -4-.
– Carefully pull mounting frame -4- out of mounting and unplug connector (left-side) for vehicle wiring harness.
– Unplug connectors at satellite radio -R146- .

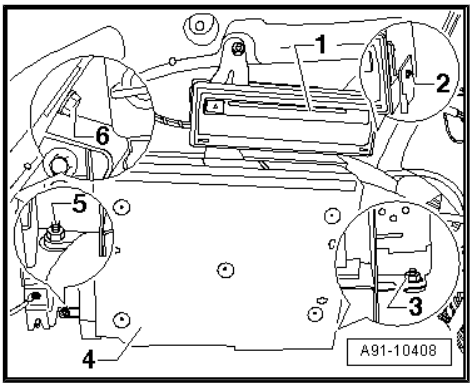

– Fit protective cap for cable connector -VAS 6223/9- -1- onto MOST bus connector -2-.
– Tilt mounting frame together with rear DVD changer -R162- downwards.

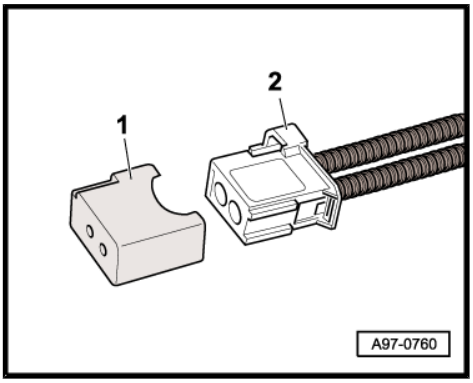

– Unscrew bolts -arrows- (3 Nm) on satellite radio -R146- -1-.
– Detach satellite radio -R146- -1- from mounting frame -2-.

Installing

– Installation is performed in reverse sequence.

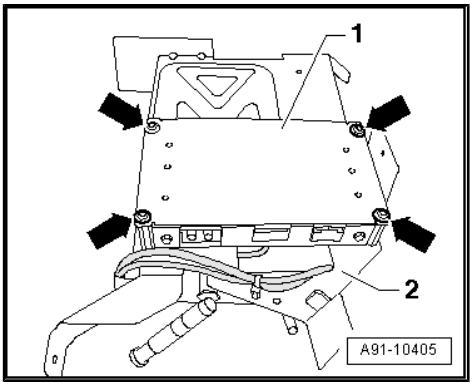

Protected by copyright. Copying for private or commercial purposes, in part or in whole, is not permitted unless authorised by AUDI AG. AUDI AG does not guarantee or accept any liability with respect to the correctness of information in this document. Copyright by AUDI AG.

6 Telephone system

6.1 General notes (up to week 35/08)

The telephone system consists of the following versions:

- Telephone (permanently installed)

The telephone transmitter/receiver unit -R36- is linked to the MMI Infotainment system via the MOST Bus.

The telephone bracket -R126- for the SIM card and the cordless telephone handset -R37- (Bluetooth technology) is fitted in the centre console or centre armrest. The system is operated using the multimedia system operating unit -E380- or the telephone handset -R37- .

Microphones for the microphone unit in front roof module -R164- are integrated in the front interior light -W1- . One microphone (telephone microphone -R38-) is connected directly to the telephone transmitter and receiver unit -R36- .

- Phone pre-installation

The telephone transmitter/receiver unit -R36- is linked to the MMI Infotainment system via the MOST Bus. It also has an aerial for Bluetooth -R152- .

The telephone bracket -R126- is fitted in the centre console/centre armrest. The system is operated using the multimedia system operating unit -E380- or the mobile telephone -R54- .

Microphones for the microphone unit in front roof module -R164- are integrated in the front interior light -W1- . One microphone (telephone microphone -R38-) is connected directly to the telephone transmitter and receiver unit -R36- .

- Bluetooth car phone

The Bluetooth car phone supports the operation of Bluetooth mobile phones. It is not necessary to fit the Bluetooth mobile phones into a bracket and they do not have to be linked to the hands-free unit in the vehicle.

Protected by copyright. Copying for private or commercial purposes, in part or in whole, is not permitted unless authorised by AUDI AG. AUDI AG does not guarantee or accept any liability with respect to the correctness of information in this document. Copyright by AUDI AG.

In this case, the Bluetooth link is the only means of connecting the mobile phone. It is also possible to read out the SIM card of the mobile phone (telephone directory).

The Bluetooth car phone has its own handset (Bluetooth handset) equipped with SIM card slide-in module and charging cradle.

The Bluetooth car phone and mobile phone are either operated via the Bluetooth handset, the hands-free unit with multi-function steering wheel or via the speech dialogue system.

The telephone transmitter/receiver unit -R36- is linked to the MMI Infotainment system via the MOST Bus.

Microphones for the microphone unit in front roof module -R164- are integrated in the front interior light -W1- . One microphone (telephone microphone -R38-) is connected directly to the telephone transmitter and receiver unit -R36- .

All mobile telephones -R54- approved by Audi can be operated with Bluetooth interface on vehicles with phone pre-installation and the Bluetooth car phone.

Notes on operation and approved types of mobile phones:

www.audi.de/telefon

- Pre-fitted components for mobile phone installation

The connector for pre-fitted components is located behind the glove box.

Microphones for the microphone unit in front roof module -R164- are integrated in the front interior light -W1- . One of the microphones (telephone microphone -R38-) is connected directly to the connector.

The aerial connection for the radio, telephone and navigation system aerial -R52- is located at the connector.

Fault finding is performed via the “Guided Fault Finding” using ⇒ Vehicle diagnosis, testing and information system VAS 5051.

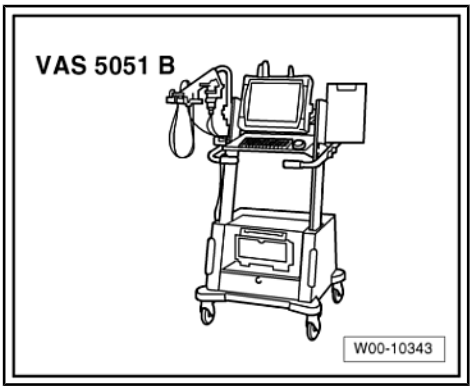

Repairing aerial wiring ⇒ Electrical system; Rep. Gr. 97 .

Notes on Bluetooth technology

A standardised radio connection system (Bluetooth technology) has been used to transmit data between telephone transmitter and receiver unit -R36- and telephone handset -R37- / mobile telephone -R54- .

An additional transmitter/receiver unit is fitted in the telephone transmitter/receiver unit -R36- . A separate Bluetooth aerial -R152- links the telephone transmitter and receiver unit -R36- and the telephone bracket -R126- / mobile telephone -R54- , allowing cordless operation of the telephone handset -R37- / mobile telephone -R54- .

The range of the radio wave connection is approx. 10 m.

For more information, refer to ⇒ Self-study programme No. 286 ; "New data bus systems - LIN, MOST, Bluetooth" .

6.2 General notes (from week 36/08 onwards)

The telephone system consists of the following versions:

- Mobile phone pre-installation in control unit 1 for information electronics -J794-

Protected by copyright. Copying for private or commercial purposes, in part or in whole, is not permitted unless authorised by AUDI AG. AUDI AG does not guarantee or accept any liability with respect to the correctness of information in this document. Copyright by AUDI AG.

The telephone bracket -R126- is fitted in the centre console. The system is operated using the MMI infotainment system or the mobile telephone -R54- .

Microphones for the microphone unit in front roof module -R164- are integrated in the front interior light -W1- . One of these microphones is connected directly to the control unit 1 for information electronics -J794- .

The aerial connection is located at the telephone bracket -R126- .

- Bluetooth car phone in control unit 1 for information electronics -J794-

The Bluetooth car phone supports the operation of Bluetooth mobile phones. It is not necessary to fit the Bluetooth mobile phones into a bracket and they do not have to be linked to the hands-free unit in the vehicle.

In this case, the Bluetooth link is the only means of connecting the mobile phone. It is also possible to read out the SIM card of the mobile phone (telephone directory).

The Bluetooth car phone has its own handset (Bluetooth handset) equipped with SIM card slide-in module and charging cradle.

The Bluetooth car phone and mobile phone are either operated via the Bluetooth handset, the hands-free unit with multi-function steering wheel or via the speech dialogue system.

The aerial for Bluetooth -R152- is fitted in the control unit 1 for information electronics -J794- .

Microphones for the microphone unit in front roof module -R164- are integrated in the front interior light -W1- . One of these microphones is connected directly to the control unit 1 for information electronics -J794- .

The aerial connection is located at the control unit 1 for information electronics -J794- .

- Pre-fitted components for mobile phone installation

The connector for pre-fitted components is located behind the glove box.

Microphones for the microphone unit in front roof module -R164- are integrated in the front interior light -W1- . One of the microphones (telephone microphone -R38-) is connected directly to the connector.

The aerial connection for the roof aerial -R216- (GPS/GSM/RC) is located at the connector.

- Bluetooth hands-free system in control unit 1 for information electronics -J794-

The control unit 1 for information electronics -J794- with microphone unit in front roof module -R164- is fitted and used as a hands-free system only. It is connected to the mobile telephone -R54- via Bluetooth.

The aerial for Bluetooth -R152- is fitted in the control unit 1 for information electronics -J794- .

Fault finding is performed via the “Guided Fault Finding” ⇒ Vehicle diagnosis, testing and information system VAS 5051.

Repairing aerial wiring ⇒ Electrical system; Rep. Gr. 97 .

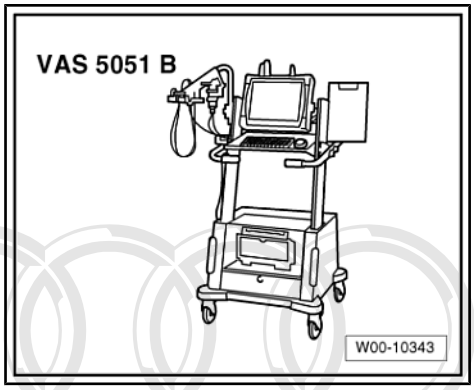

Notes on Bluetooth technology

A standardised radio connection system (Bluetooth technology) is used to transmit data between the control unit 1 for information electronics -J794- and the telephone handset -R37- / mobile telephone -R54- .

An additional transmitter and receiver unit is fitted in the control unit 1 for information electronics -J794- . A separate aerial for Bluetooth -R152- links the control unit 1 for information electronics -J794- and the telephone bracket -R126- / mobile telephone -R54- , allowing cordless operation of the telephone handset -R37- / mobile telephone -R54- .

The range of the radio wave connection is approx. 10 m.

For more information, refer to ⇒ Self-study programme No. 286 ; "New data bus systems - LIN, MOST, Bluetooth" .

Protected by copyright. Copying for private or commercial purposes, in part or in whole, is not permitted unless authorised by AUDI AG. AUDI AG does not guarantee or accept any liability with respect to the correctness of information in this document. Copyright by AUDI AG.

6.3 Permanently installed telephone system (up to week 35/08) - layout

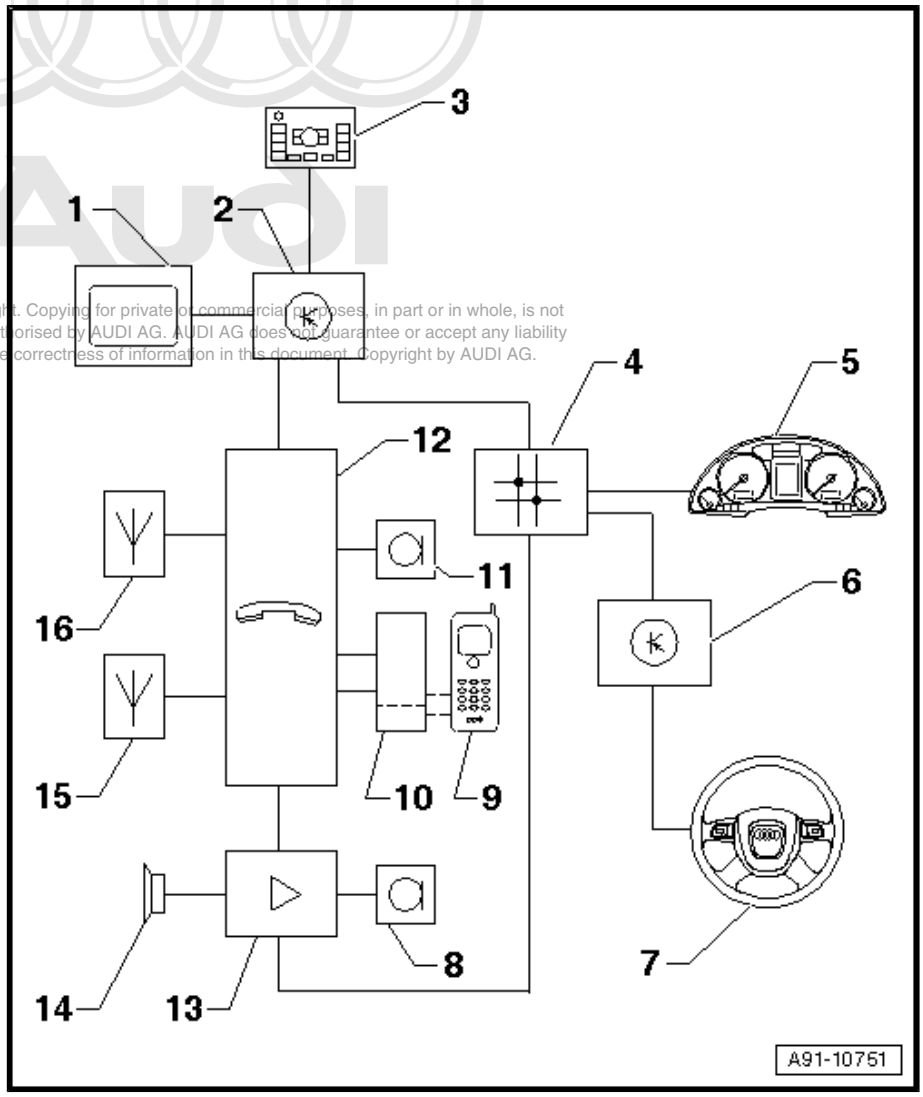

Protected by copyright. Copying for private or commercial purposes, in part or in whole, is not permitted unless authorised by AUDI AG. AUDI AG does not guarantee or accept any liability with respect to the correctness of information in this document. Copyright by AUDI AG.

1 - Display unit for front information display and operating unit control unit -J685- in dash panel (centre)

2 - Control unit for front display and information control panel -J523- behind glove box

3 - Multimedia system operating unit -E380- in centre console (bottom)

4 - Data bus diagnostic interface -J533- behind glove box

5 - Control unit in dash panel insert -J285- (instrument cluster) in dash panel

6 - Steering column electronics control unit -J527- on steering column on steering column switch

7 - Multi-function steering wheel

8 - Microphone unit in front roof module -R164- in front interior light -W1-

9 - Telephone handset -R37- , wireless

10 - Telephone bracket -R126- in centre console with aerial for Bluetooth -R152-

- Telephone bracket -R126- in centre armrest (front and/or rear)

11 - Microphone unit in front roof module -R164- (telephone microphone -R38-) in front interior light -W1-

12 - Telephone transmitter and receiver unit -R36- in front of front seat (left-side) beneath floor covering

13 - Digital sound package control unit -J525- behind luggage compartment side trim (left-side)

14 - Sound systems

15 - Aerial for Bluetooth -R152- beneath centre console, with telephone bracket -R126- in centre armrest (front and/or rear)

16 - Telephone aerial -R65- behind roof end trim (right-side) (up to model year 2002) / roof aerial (from model year 2003 onwards)

6.4 Mobile phone pre-installation (up to week 35/08) - layout

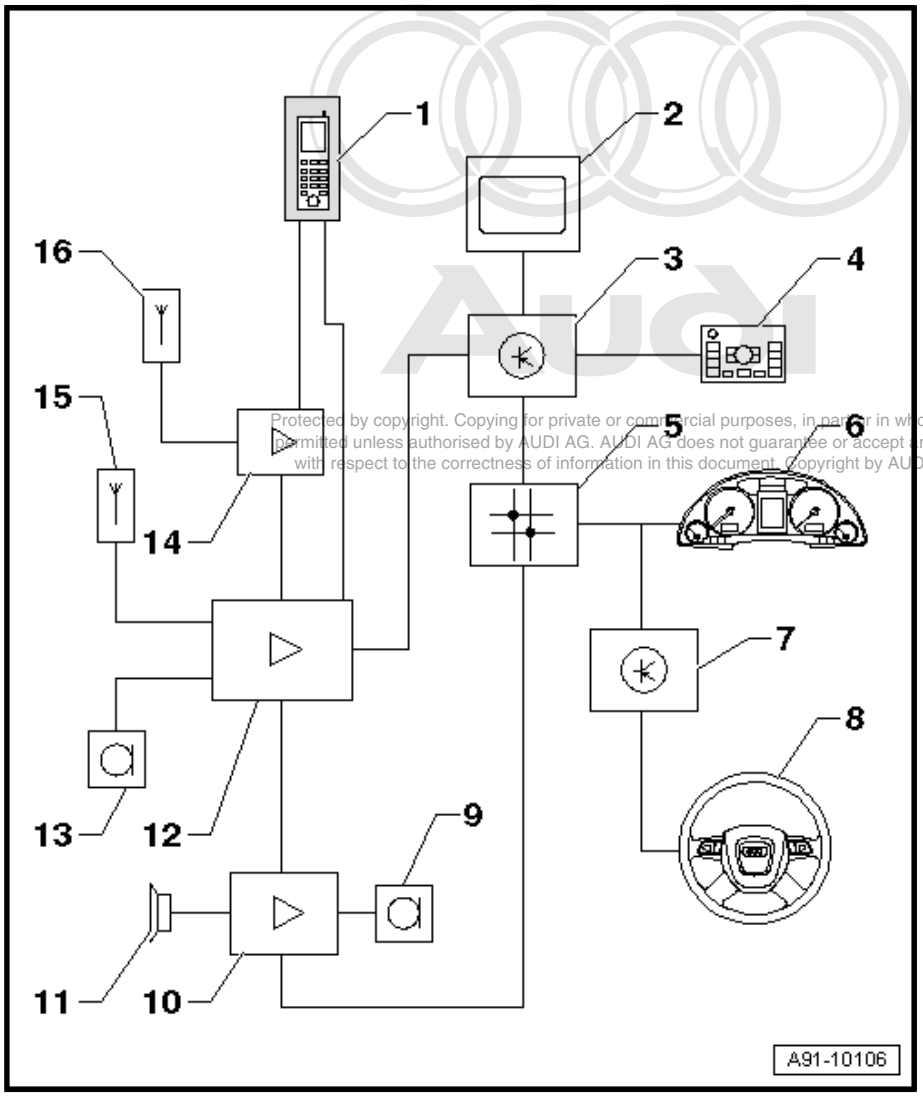

Protected by copyright. Copying for private or commercial purposes, in part or in whole, is not permitted unless authorised by AUDI AG. AUDI AG does not guarantee or accept any liability with respect to the correctness of information in this document. Copyright by AUDI AG.

1 - Telephone bracket -R126- on centre console/centre armrest (front and/or rear)

2 - Display unit for front information display and operating unit control unit -J685- in dash panel (centre)

3 - Control unit for front display and information control panel -J523- behind glove box

4 - Multimedia system operating unit -E380- in centre console (bottom)

5 - Data bus diagnostic interface -J533- behind glove box

6 - Control unit in dash panel insert -J285- (instrument cluster) in dash panel

7 - Steering column electronics control unit -J527- on steering column on steering column switch

8 - Multi-function steering wheel

9 - Microphone unit in front roof module -R164- in front interior light -W1-

10 - Digital sound package control unit -J525- behind luggage compartment side trim (left-side)

11 - Sound systems

12 - Telephone transmitter and receiver unit -R36- in front of front seat (left-side) beneath floor covering

13 - Microphone unit in front roof module -R164- (telephone microphone -R38-) in front interior light -W1-

14 - Aerial amplifier for mobile telephone -R86- behind right C-pillar trim at bottom

15 - Aerial for Bluetooth -R152- on telephone transmitter and receiver unit -R36-

16 - Telephone aerial -R65- (roof aerial)

6.5 Mobile phone pre-installation (from week 36/08 onwards) - layout

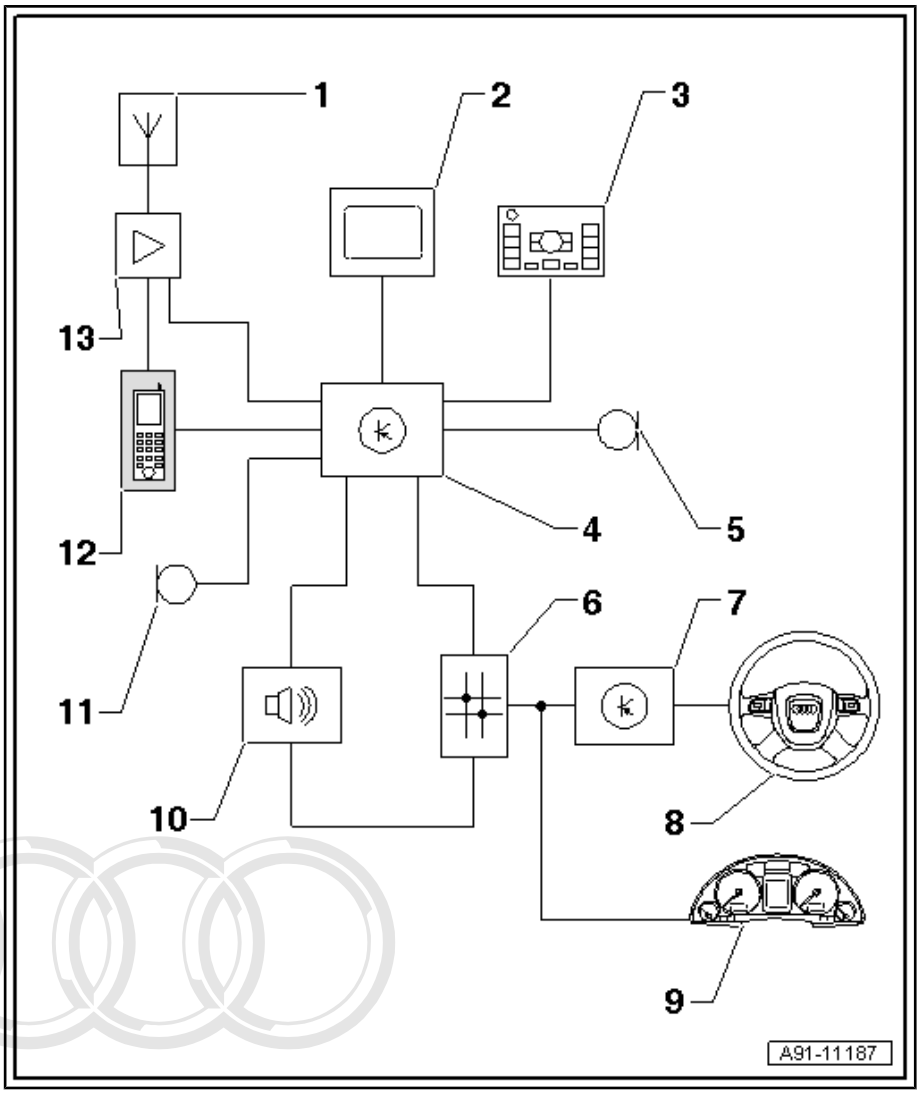

1 - Roof aerial -R216- (GPS/ GSM/RC)

2 - Display unit for front information display and operating unit control unit -J685- in dash panel (centre)

3 - Multimedia system operating unit -E380- in centre console (bottom)

4 - Control unit 1 for information electronics -J794- in glove box (left-side)

5 - Microphone unit in front roof module -R164- (front right microphone -R141-) in front interior light -W1-

6 - Data bus diagnostic interface -J533- behind glove box

7 - Steering column electronics control unit -J527- on steering column on steering column switch

8 - Multi-function steering wheel

9 - Control unit in dash panel insert -J285- (instrument cluster) in dash panel

10 - Digital sound package control unit -J525- behind luggage compartment side trim (left-side)

11 - Microphone unit in front roof module -R164- (front left microphone -R140-) in front interior light -W1-

12 - Telephone bracket -R126- with mobile telephone -R54-

13 - Aerial amplifier for mobile telephone -R86- behind right C-pillar trim at bottom

Protected by copyright. Copying for private or commercial purposes, in part or in whole, is not permitted unless authorised by AUDI AG. AUDI AG does not guarantee or accept any liability with respect to the correctness of information in this document. Copyright by AUDI AG.

6.6 Bluetooth car phone (up to week 35/08) - layout

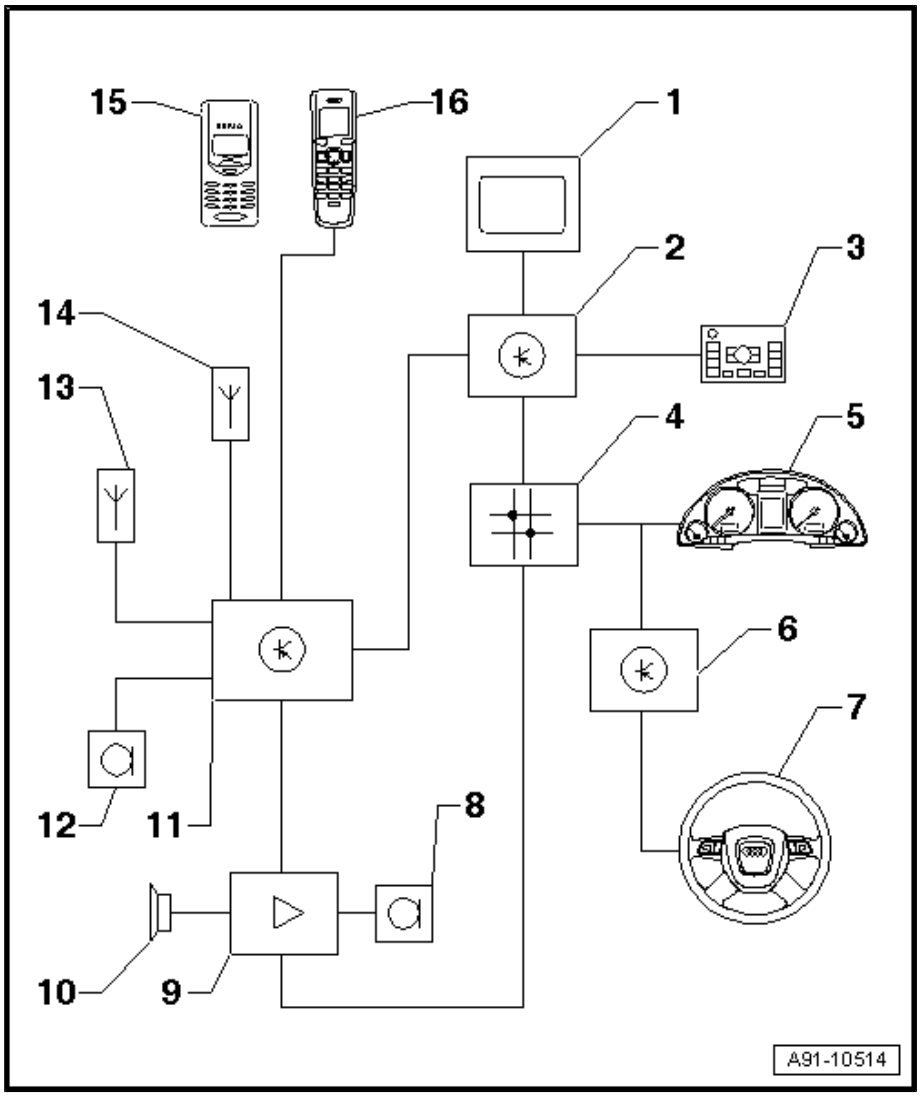

1 - Display unit for front information display and operating unit control unit -J685- in dash panel (centre)

2 - Control unit for front display and information control panel -J523- behind glove box

3 - Multimedia system operating unit -E380- in centre console (bottom)

4 - Data bus diagnostic interface -J533- behind glove box

5 - Control unit in dash panel insert -J285- (instrument cluster) in dash panel

6 - Steering column electronics control unit -J527- on steering column on steering column switch

7 - Multi-function steering wheel

8 - Microphone unit in front roof module -R164- in front interior light -W1-

9 - Digital sound package control unit -J525- behind luggage compartment side trim (left-side)

10 - Sound systems

11 - Telephone transmitter and receiver unit -R36- in front of front seat (left-side) beneath floor covering

12 - Microphone unit in front roof module -R164- (telephone microphone -R38-) in front interior light -W1-

13 - Telephone aerial -R65- (roof aerial)

14 - Aerial for Bluetooth -R152- on telephone transmitter and receiver unit -R36-

15 - Mobile telephone -R54- (customer's own mobile phone)

16 - Telephone bracket -R126- with telephone handset -R37- (Bluetooth) on centre console/centre armrest (front and/or rear)

Protected by copyright. Copying for private or commercial purposes, in part or in whole, is not permitted unless authorised by AUDI AG. AUDI AG does not guarantee or accept any liability with respect to the correctness of information in this document. Copyright by AUDI AG.

6.7 Bluetooth car phone (from week 36/08 onwards) - layout

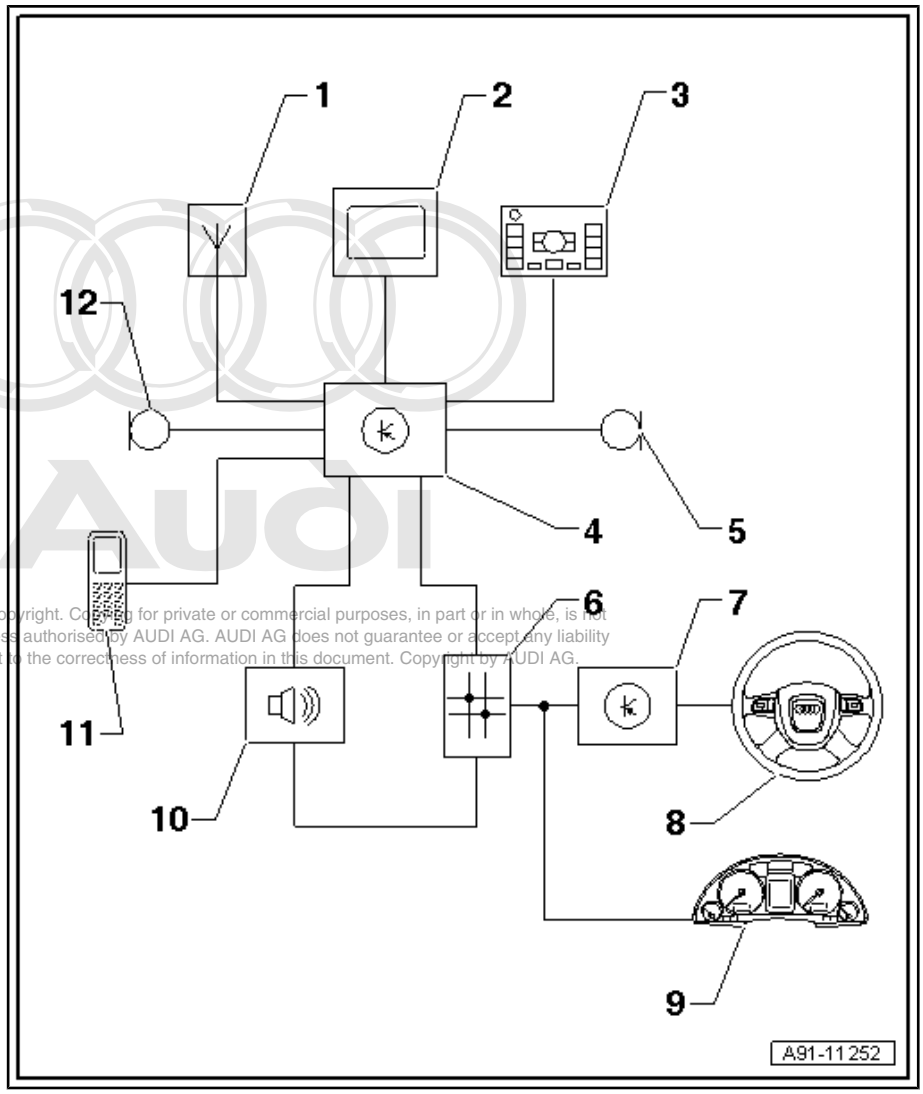

1 - Roof aerial -R216- (GPS/ GSM/RC)

2 - Display unit for front information display and operating unit control unit -J685- in dash panel (centre)

3 - Multimedia system operating unit -E380- in centre console (bottom)

4 - Control unit 1 for information electronics -J794- in glove box (left-side)

5 - Microphone unit in front roof module -R164- (front right microphone -R141-) in front interior light -W1-

6 - Data bus diagnostic interface -J533- behind glove box

7 - Steering column electronics control unit -J527- on steering column on steering column switch

8 - Multi-function steering wheel

9 - Control unit in dash panel insert -J285- (instrument cluster) in dash panel

10 - Digital sound package control unit -J525- behind luggage compartment side trim (left-side)

11 - Telephone bracket -R126- with telephone handset -R37-

12 - Microphone unit in front roof module -R164- (front left microphone -R140-) in front interior light -W1-

Copyright. Copying for private or commercial purposes, in part or in whole, is not permitted unless authorised by AUDI AG. AUDI AG does not guarantee or accept any liability with respect to the correctness of information in this document. Copyright by AUDI AG.

6.8 Pre-fitted components for mobile phone installation - layout

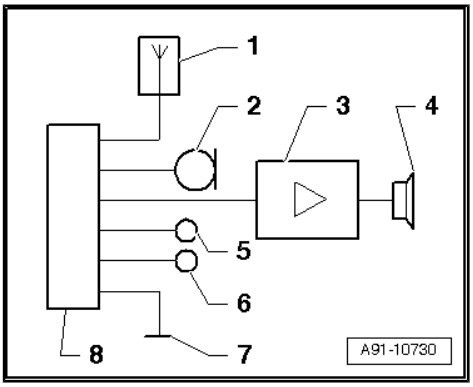

Layout

1 - Radio, telephone and navigation system aerial -R52-

2 - Microphone unit in front roof module -R164- (telephone microphone -R38-)

3 - Digital sound package control unit -J525- / radio -R- (from week 36/08 onwards)

4 - Sound systems

5 - Terminal 15

6 - Terminal 30

7 - Terminal 31

8 - Multi-pin connector, 18-pin, black (T18d) behind glove box

Fitting location of connectors

1 - Adaptive suspension control unit -J197-

2 - Connectors for pre-fitted components for mobile phone installation

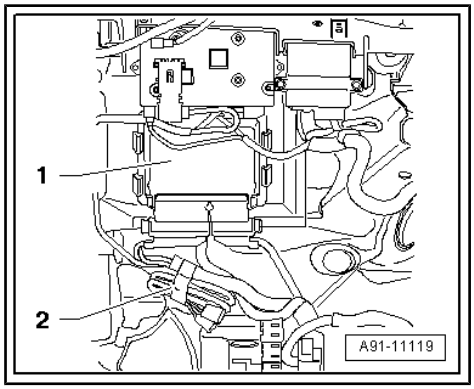

6.9 Bluetooth hands-free system - layout

1 - Display unit for front information display and operating unit control unit -J685- in dash panel (centre)

2 - Multimedia system operating unit -E380- in centre console (bottom)

3 - Microphone unit in front roof module -R164- (front right microphone -R141-) in front interior light -W1-

4 - Control unit 1 for information electronics -J794- with aerial for Bluetooth -R152- in glove box (left-side)

5 - Data bus diagnostic interface -J533- behind glove box

6 - Digital sound package control unit -J525- behind luggage compartment side trim (left-side)

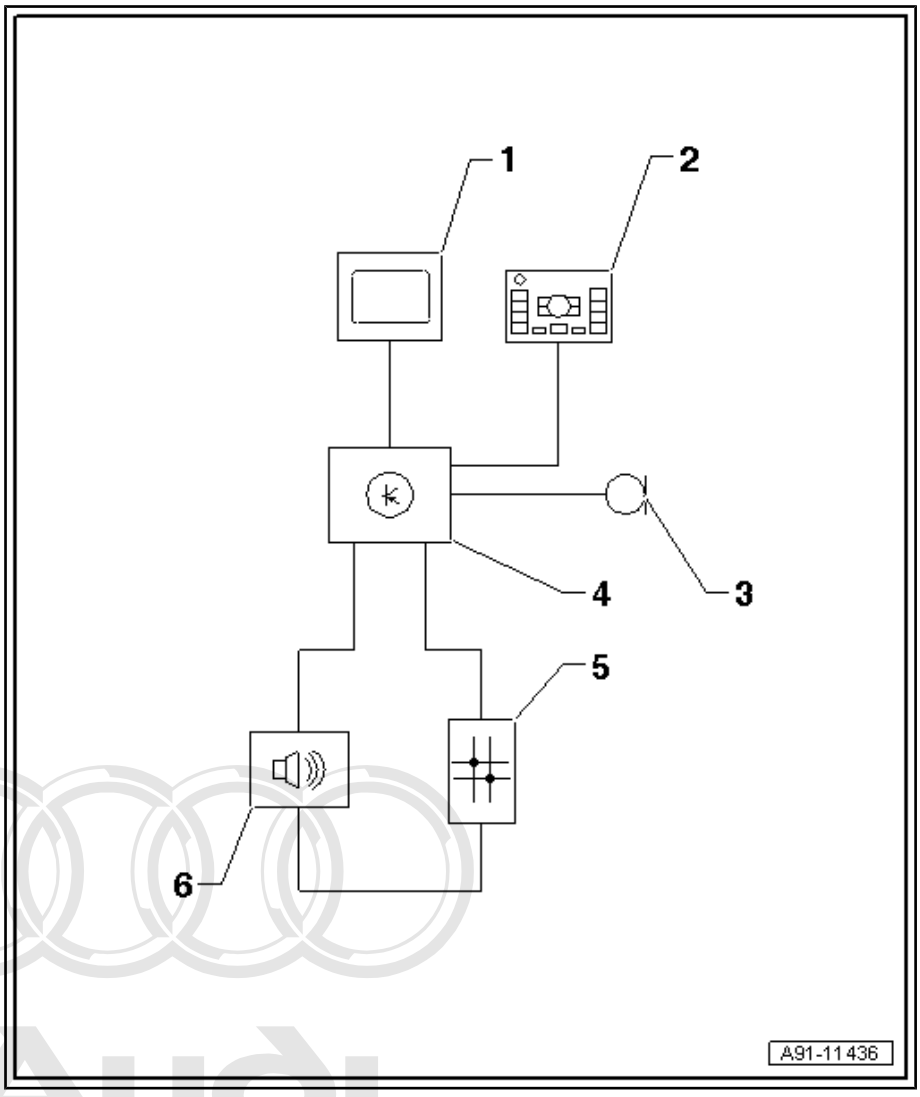

6.10 Microphone unit in front roof module - R164- - overview

Protected by copyright. Copying for private or commercial purposes, in part or in whole, is not permitted unless authorised by AUDI AG. AUDI AG does not guarantee or accept any liability with respect to the correctness of information in this document. Copyright by AUDI AG.

The microphone unit in front roof module -R164- in front interior light -W1- consists of up to three microphones.

From week 22/04 onwards only two microphones are fitted.

One microphone (telephone microphone -R38-) is connected directly to the telephone transmitter and receiver unit -R36- . The other microphones are connected to the digital sound package control unit -J525- .

Microphone unit in front roof module -R164-

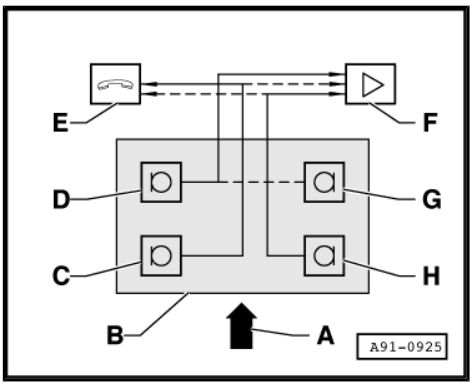

A - Direction of travel

B - Front interior light -W1-

C - Microphone 1 (black/grey) to digital sound package control unit -J525- / telephone transmitter and receiver unit -R36-

D - Microphone 2 (white) to digital sound package control unit -J525- (only on LHD vehicles) up to week 21/04

E - Telephone transmitter and receiver unit -R36-

F - Digital sound package control unit -J525-

G - Microphone 4 (red) to digital sound package control unit -J525- (only on RHD vehicles) up to week 21/04

H - Microphone 3 (blue/green) to digital sound package control unit -J525- / telephone transmitter and receiver unit -R36-

Removing and installing microphone unit in front roof module -R164- ⇒ page 168 .

6.10.1 Installation tables (up to week 21/04)

Standard

Microphone	Telephone and SDS	SDS	Telephone	Without telephone and SDS
1 (3)	X	X	X	
2 (4)	X	X		
3 (1)	X			

Figures in brackets (...) apply to RHD vehicles

BOSE

Protected by copyright. Copying for private or commercial purposes, in part or in whole, is not permitted unless authorised by AUDI AG. AUDI AG does not guarantee or accept any liability with respect to the correctness of information in this document. Copyright by AUDI AG.

Microphone	Telephone and SDS	SDS	Telephone	Without telephone and SDS
1 (3)	X	X	X	X
2 (4)	X	X	X	
3 (1)	X			

Figures in brackets (...) apply to RHD vehicles

6.10.2 Installation tables (from week 22/04 on-wards)

Standard

Microphone	Telephone and SDS	SDS	Telephone	Without telephone and SDS
1 (3)	X	X	X	
3 (1)	X			

Figures in brackets (...) apply to RHD vehicles

BOSE

Microphone	Telephone and SDS	SDS	Telephone	Without telephone and SDS
1 (3)	X	X	X	X
3 (1)	X			

Figures in brackets (...) apply to RHD vehicles

6.10.3 Microphone unit in front roof module - R164- (from week 36/08 onwards)

The microphone unit in front roof module -R164- is fitted in the front interior light -W1- . There are up to three microphones installed (depending on equipment).

One of the microphones (internal microphone -R74-) is connected directly to the digital sound package control unit -J525- . The other microphones are connected to the control unit 1 for information electronics -J794- .

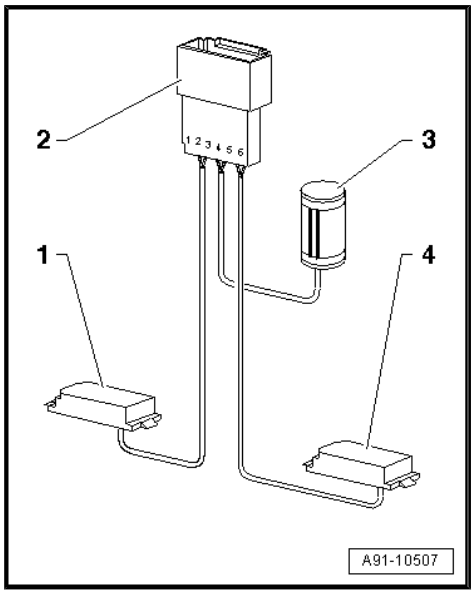

Microphone unit in front roof module -R164-

Left-hand drive vehicles:

1 - Front left microphone -R140- (black)

2 - 6-pin connector, blue (T6o), pins 1-2: front left microphone -R140- (black), pins 3-4: internal microphone -R74- (black), pins 5-6: front right microphone -R141- (blue)

3 - Internal microphone -R74- (black)

4 - Front right microphone -R141- (blue)

Right-hand drive vehicles:

1 - Front right microphone -R141- (blue)

2 - 6-pin connector, blue (T6o), pins 1-2: front right microphone -R141- (blue), pins 3-4: internal microphone -R74- (black), pins 5-6: front left microphone -R140- (black)

3 - Internal microphone -R74- (black)

4 - Front left microphone -R140- (black)

Removing and installing microphone unit in front roof module -R164- ⇒ page 168 .

6.11 Connectors for permanently installed telephone system (up to week 35/08)

Telephone transmitter and receiver unit -R36-

A - GSM connection (purple) from telephone aerial -R65-

B - Connection (yellow) for aerial for Bluetooth -R152-

C - MOST bus

D - Multi-pin connector, 42-pin, blue (T46)

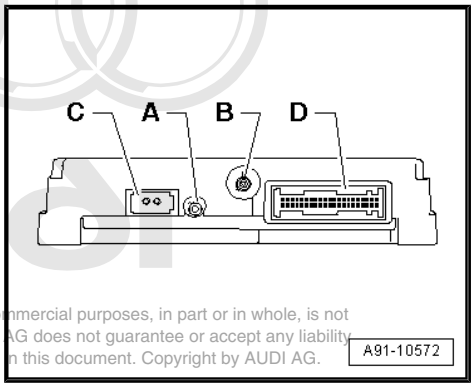

Protected by copyright. Copying for private or commercial purposes, in part or in whole, is not permitted unless authorised by AUDI AG. AUDI AG does not guarantee or accept any liability with respect to the correctness of information in this document. Copyright by AUDI AG.

Note

Contacts which are not listed are not used.

C - MOST bus

1 - Input

2 - Output

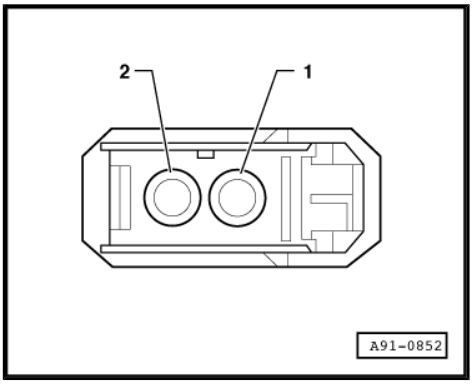

D - Multi-pin connector, 42-pin, blue (T46)

6 - Screen earth to telephone bracket -R126-

7 - Data (+) to telephone bracket -R126-

8 - TCU-Grd to telephone bracket -R126-

15 - Terminal 31

16 - Terminal 31

28 - Data (–) to telephone bracket -R126-

29 - CNT-RL to telephone bracket -R126-

33 - Open circuit diagnostic lead

35 - Terminal 30

36 - Terminal 30

37 - Terminal 31

41 - Microphone input (–) from microphone unit in front roof module -R164- (telephone microphone -R38-)

42 - Microphone input (+) from microphone unit in front roof module -R164- (telephone microphone -R38-)

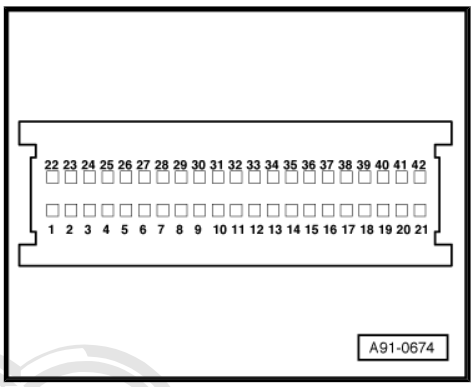

6.12 Connectors for mobile phone pre-installation (up to week 35/08)

Protected by copyright. Copying for private or commercial purposes, in part or in whole, is not permitted unless authorised by AUDI AG. AUDI AG does not guarantee or accept any liability with respect to the correctness of information in this document. Copyright by AUDI AG.

Telephone transmitter and receiver unit -R36-

A - Multi-pin connector, 54-pin, black (T54)

B - Connection (yellow) for aerial for Bluetooth -R152-

C - MOST bus

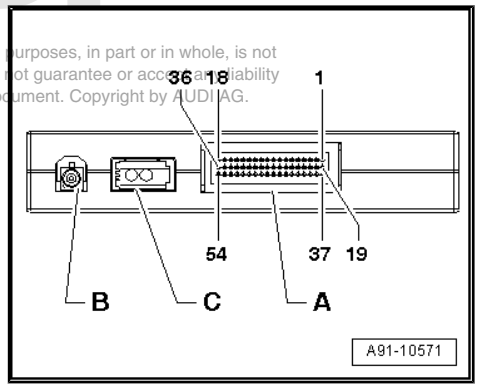

Note

Contacts which are not listed are not used.

A - Multi-pin connector, 54-pin (T54)

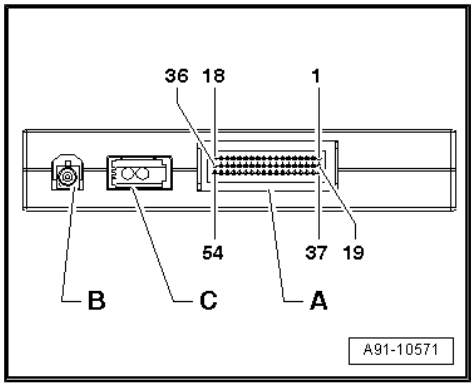

1 - Terminal 30

2 - Terminal 31

3 - Mobile phone “ON” signal to aerial amplifier for mobile telephone -R86-

11 - Microphone input (+) from microphone unit in front roof module -R164- (telephone microphone -R38-)

12 - Microphone input (–) from microphone unit in front roof module -R164- (telephone microphone -R38-)

14 - Open circuit diagnostic lead

37 - Terminal 30 to telephone bracket -R126-

39 - Terminal 31 to telephone bracket -R126-

41 - Terminal 30 to telephone bracket -R126-

42 - Microphone output (+) to telephone bracket -R126-

43 - Microphone output (–) to telephone bracket -R126-

44 - Terminal 31 (screen earth)

45 - NF (+) (low frequency) from telephone bracket -R126-

46 - NF (–) (low frequency) from telephone bracket -R126-

47 - SNDREQ signal from telephone bracket -R126-

49 - Ser-Tx (+) to telephone bracket -R126-

50 - Ser-Tx (–) to telephone bracket -R126-

51 - Ser-Rx (+) from telephone bracket -R126-

52 - Ser-Rx (–) from telephone bracket -R126-

Protected by copyright. Copying for private or commercial purposes, in part or in whole, is not permitted unless authorised by AUDI AG. AUDI AG does not guarantee or accept any liability with respect to the correctness of information in this document. Copyright by AUDI AG.

C - MOST bus

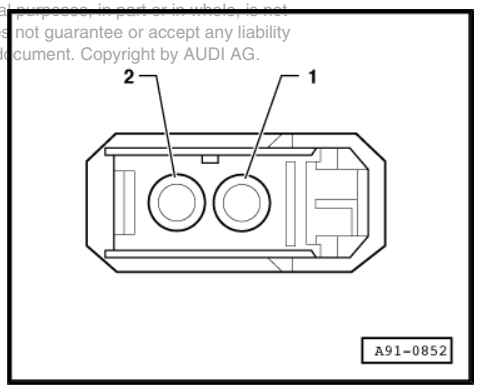

1 - Input

2 - Output

6.13 Connectors for mobile phone pre-installation (from week 36/08 onwards)

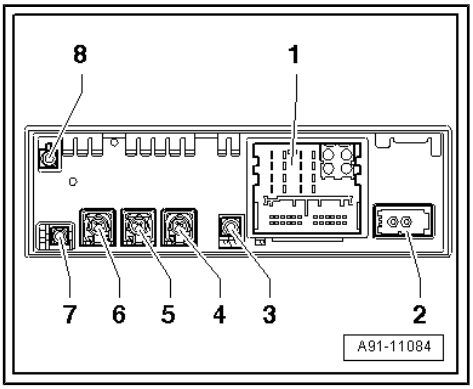

Control unit 1 for information electronics -J794-

1 - Connection block with four multi-pin connectors

2 - MOST bus

3 - Not used

4 - Multi-pin connector, 4-pin, grey (T4am) to display unit for front information display and operating unit control unit -J685-

5 - Multi-pin connector, 4-pin (T4ao) to connection for external audio sources -R199-

6 - Not used

7 - GPS connection from roof aerial -R216-

8 - GSM connection from roof aerial -R216-

Note

Protected by copyright. Copying for private or commercial purposes, in part or in whole, is not permitted unless authorised by AUDI AG. AUDI AG does not guarantee or accept any liability with respect to the correctness of information in this document. Copyright by AUDI AG.

Contacts which are not listed are not used.

A - Multi-pin connector, 8-pin, brown (T8z)

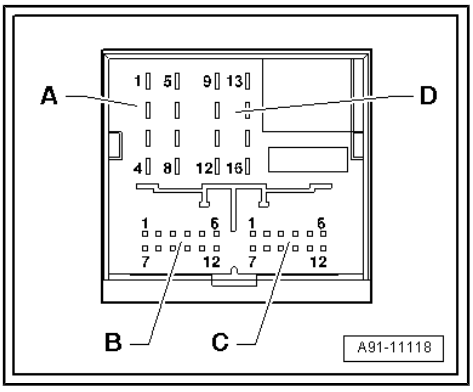

2 - Voltage supply to multimedia system operating unit -E380-

3 - Wake-up to multimedia system operating unit -E380-

5 - Mobile phone “ON” signal to aerial amplifier for mobile telephone -R86-

6 - Res MU to multimedia system operating unit -E380-

7 - Open circuit diagnostic lead

B - Multi-pin connector, 12-pin, blue (T12y)

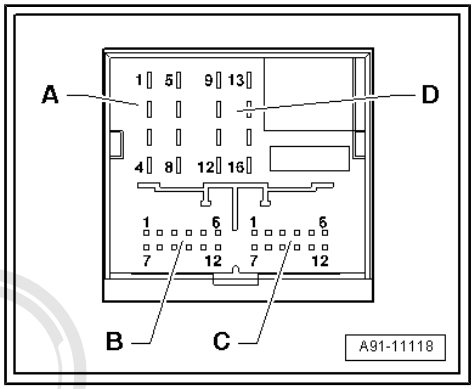

Left-hand drive vehicle

2 - Microphone input (+) from microphone unit in front roof module -R164- (front right microphone -R141-)

3 - Microphone input (–) from microphone unit in front roof module -R164- (front right microphone -R141-)

8 - Microphone input (+) from microphone unit in front roof module -R164- (front left microphone -R140-)

9 - Microphone input (–) from microphone unit in front roof module -R164- (front left microphone -R140-)

11 - FBAS wire (+) from reversing camera system control unit -J772-

Right-hand drive vehicle

2 - Microphone input (+) from microphone unit in front roof module -R164- (front left microphone -R140-)

3 - Microphone input (–) from microphone unit in front roof module -R164- (front left microphone -R140-)

8 - Microphone input (+) from microphone unit in front roof module -R164- (front right microphone -R141-)

9 - Microphone input (–) from microphone unit in front roof module -R164- (front right microphone -R141-)

11 - FBAS wire (+) from reversing camera system control unit -J772-

Protected by copyright. Copying for private or commercial purposes, in part or in whole, is not permitted unless authorised by AUDI AG. AUDI AG does not guarantee or accept any liability with respect to the correctness, timeliness, completeness of this document. Copyright by AUDI AG.

D - Multi-pin connector, 8-pin, black (T8)

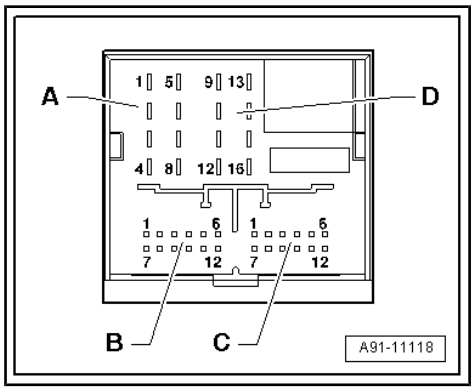

10 - Data from multimedia system operating unit -E380-

11 - Data to multimedia system operating unit -E380-

12 - Terminal 31

13 - SNDREQ signal from telephone bracket -R126- (mobile telephone)

14 - Res BT from multimedia system operating unit -E380-

15 - Terminal 30

16 - Earth to multimedia system operating unit -E380-

2 - MOST bus

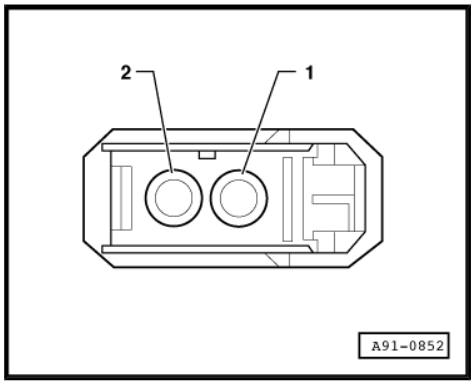

1 - Input

2 - Output

6.14 Connectors for Bluetooth car phone (up to week 35/08)

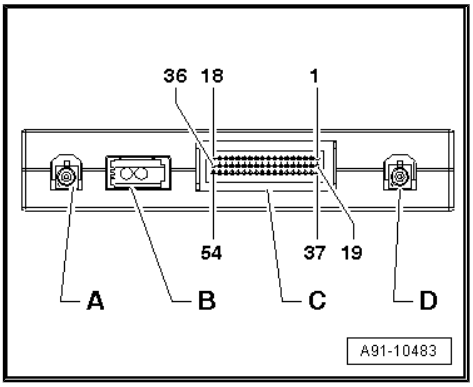

Telephone transmitter and receiver unit -R36-

A - Connection (yellow) for aerial for Bluetooth -R152-

B - MOST bus

C - Multi-pin connector, 54-pin, black (T54)

D - GSM connection (purple) from telephone aerial -R65-

Note

Contacts which are not listed are not used.

B - MOST bus

1 - Input

2 - Output

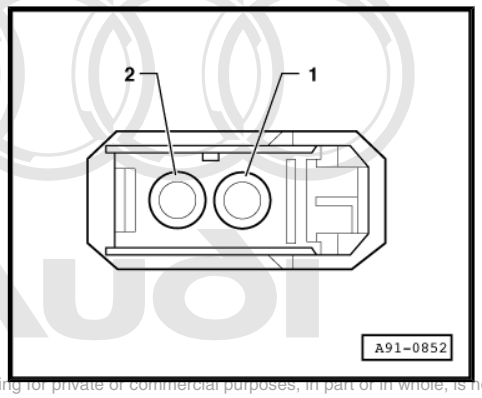

Protected by copyright. Copying for private or commercial purposes, in part or in whole, is not permitted unless authorised by AUDI AG. AUDI AG does not guarantee or accept any liability with respect to the correctness of information in this document. Copyright by AUDI AG.

C - Multi-pin connector, 54-pin, black (T54)

1 - Terminal 30

2 - Terminal 31

3 - “Mobile phone ON” signal from telephone bracket -R126-

10 - Terminal 31 (screen earth)

11 - Microphone input (+) from microphone unit in front roof module -R164- (telephone microphone -R38-)

12 - Microphone input (–) from microphone unit in front roof module -R164- (telephone microphone -R38-)

14 - Open circuit diagnostic lead

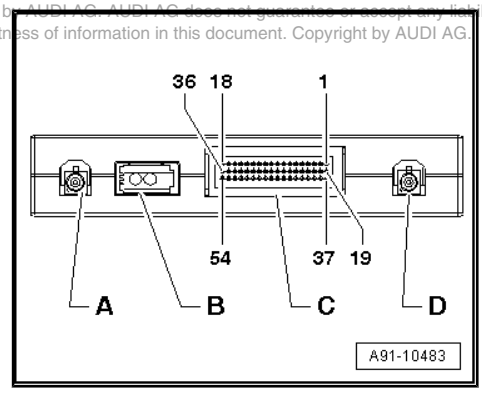

6.15 Connectors for Bluetooth car phone (from week 36/08 onwards)

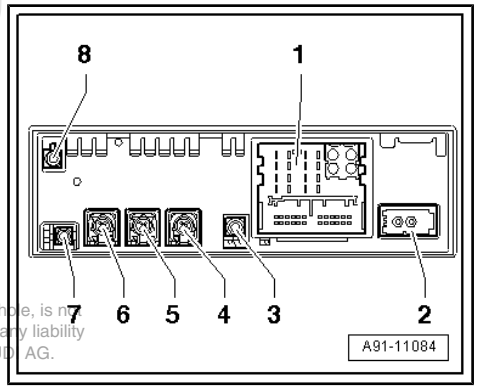

Control unit 1 for information electronics -J794-

1 - Connection block with four multi-pin connectors

2 - MOST bus

3 - Not used

4 - Multi-pin connector, 4-pin, grey (T4am) to display unit for front information display and operating unit control unit -J685-

5 - Multi-pin connector, 4-pin (T4ao) to connection for external audio sources -R199-

6 - Not used

7 - GPS connection from roof aerial -R216-

8 - GSM connection from roof aerial -R216-

Protected by copyright. Copying for private or commercial purposes, in part or in whole, is not permitted unless authorised by AUDI AG. AUDI AG does not guarantee or accept any liability with respect to the correctness of information in this document. Copyright by AUDI AG.

Note

Contacts which are not listed are not used.

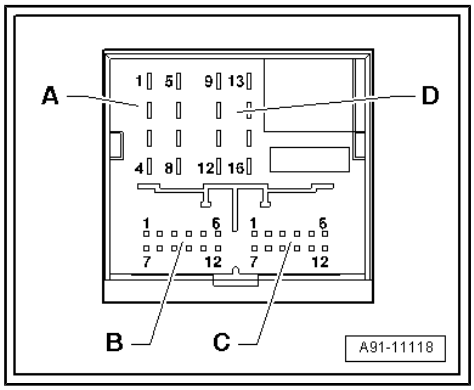

A - Multi-pin connector, 8-pin, brown (T8z)

2 - Voltage supply to multimedia system operating unit -E380-

3 - Wake-up to multimedia system operating unit -E380-

6 - Res MU to multimedia system operating unit -E380-

7 - Open circuit diagnostic lead

B - Multi-pin connector, 12-pin, blue (T12y)

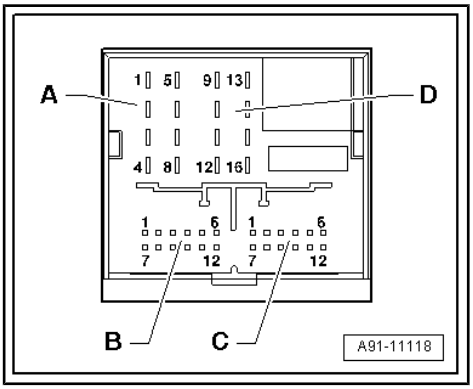

Left-hand drive vehicle

2 - Microphone input (+) from microphone unit in front roof module -R164- (front right microphone -R141-)

3 - Microphone input (–) from microphone unit in front roof module -R164- (front right microphone -R141-)

8 - Microphone input (+) from microphone unit in front roof module -R164- (front left microphone -R140-)

9 - Microphone input (–) from microphone unit in front roof module -R164- (front left microphone -R140-)

Protected by copyright. Copying for private or commercial purposes, in part or in whole, is not permitted unless authorised by AUDI AG. AUDI AG does not guarantee or accept any liability with respect to the correctness of information in this document. Copyright by AUDI AG.

11 - FBAS wire (+) from reversing camera system control unit -J772-

Right-hand drive vehicle

2 - Microphone input (+) from microphone unit in front roof module -R164- (front left microphone -R140-)

3 - Microphone input (–) from microphone unit in front roof module -R164- (front left microphone -R140-)

8 - Microphone input (+) from microphone unit in front roof module -R164- (front right microphone -R141-)

9 - Microphone input (–) from microphone unit in front roof module -R164- (front right microphone -R141-)

11 - FBAS wire (+) from reversing camera system control unit -J772-

D - Multi-pin connector, 8-pin, black (T8)

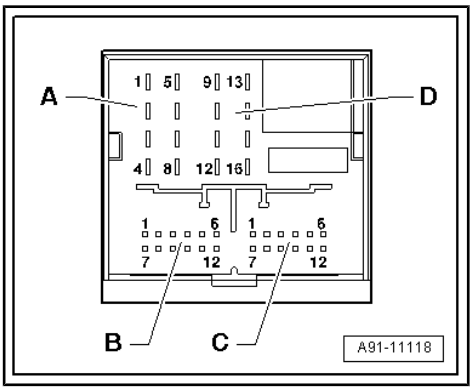

9 - “Telephone ON” signal to telephone bracket -R126-

10 - Data from multimedia system operating unit -E380-

11 - Data to multimedia system operating unit -E380-

12 - Terminal 31

14 - Res BT from multimedia system operating unit -E380-

15 - Terminal 30

16 - Earth to multimedia system operating unit -E380-

2 - MOST bus

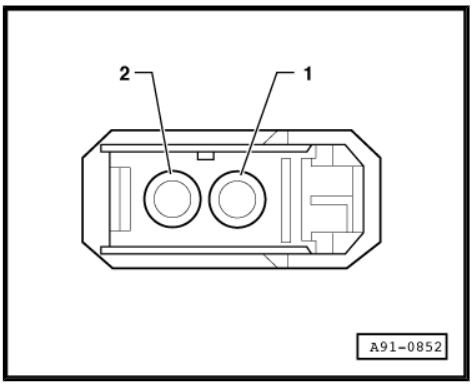

1 - Input

2 - Output

6.16 Connectors for aerial amplifier for mobile telephone -R86- (up to model year 2008)

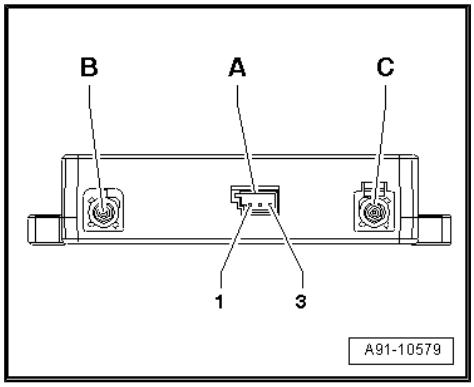

Aerial amplifier for mobile telephone -R86-

A - Multi-pin connector, 3-pin, black

B - GSM connection (purple) to telephone aerial -R65-

C - Aerial connection (purple) to mobile telephone -R54-

Note

Contacts which are not listed are not used.

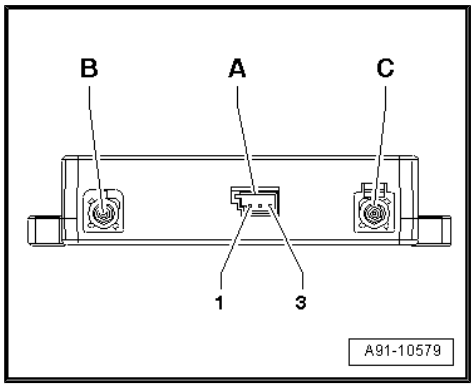

A - Multi-pin connector, 3-pin, black

1 - Terminal 30

2 - Terminal 31

3 - Mobile phone “ON” signal from telephone transmitter and receiver unit -R36-

6.17 Connectors for aerial amplifier for mobile telephone -R86- (from model year 2009 onwards)

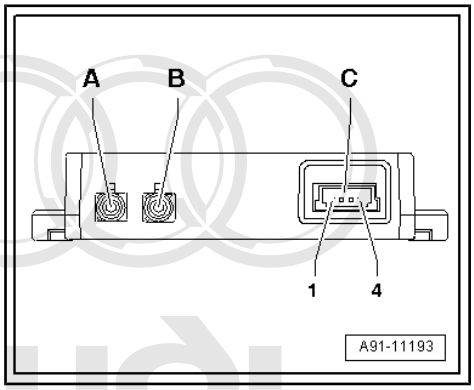

Aerial amplifier for mobile telephone -R86-

A - GSM connection (purple) from roof aerial -R216-

B - Aerial connection (purple) to telephone bracket -R126-

C - Multi-pin connector, 4-pin, black (T4ba)

Note

Contacts which are not listed are not used.

Protected by copyright. Copying for private or commercial purposes, in part or in whole, is not permitted unless authorised by AUDI AG. AUDI AG does not guarantee or accept any liability with respect to the correctness of information in this document. Copyright by AUDI AG.

C - Multi-pin connector, 4-pin, black (T4ba)

1 - Terminal 30

2 - Terminal 31

3 - “Mobile phone ON” signal from control unit 1 for information electronics -J794-

4 - Safety PIN (not used)

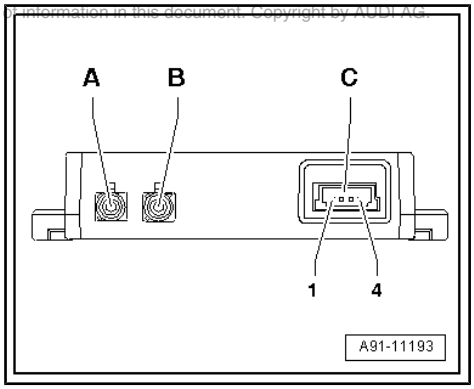

6.18 Connector for pre-fitted components for mobile phone installation

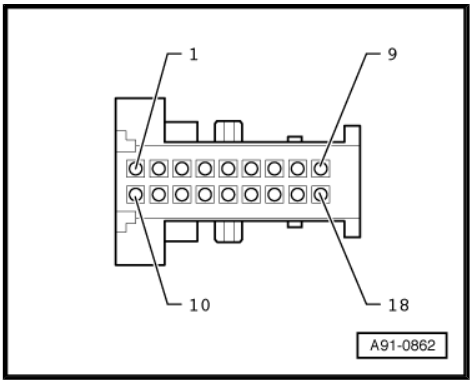

Note

Contacts which are not listed are not used.

Multi-pin connector, 18-pin, black (T18d)

1 - Terminal 31

4 - NF mute (low frequency) to control unit for front display and information control panel -J523- (up to week 35/08)

- NF mute (low frequency) to control unit 1 for information electronics -J794- (from week 36/08 onwards)

7 - NF (–) (low frequency) to digital sound package control unit -J525- (up to week 35/08)

- NF (–) (low frequency) to radio -R- (from week 36/08 onwards)

9 - Microphone input (–) from microphone unit in front roof module -R164-

10 - Terminal 15

11 - Terminal 30

16 - NF (+) (low frequency) to digital sound package control unit -J525- (up to week 35/08)

- NF (+) (low frequency) to radio -R- (from week 36/08 onwards)

18 - Microphone input (+) from microphone unit in front roof module -R164-

6.19 Connectors for Bluetooth hands-free system

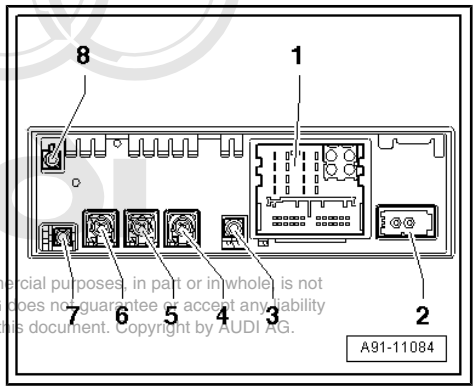

Control unit 1 for information electronics -J794-

1 - Connection block with four multi-pin connectors

2 - MOST bus

3 - Not used

4 - Multi-pin connector, 4-pin, grey (T4am) to display unit for front information display and operating unit control unit -J685-

5 - Multi-pin connector, 4-pin (T4ao) to connection for external audio sources -R199-

6 - Not used

7 - Not used

8 - Not used

Protected by copyright. Copying for private or commercial purposes, in part or in whole, is not permitted unless authorized by AUDI AG. AUDI AG does not guarantee or accept any liability with respect to the correctness of information in this document. Copyright by AUDI AG.

Note

Contacts which are not listed are not used.

A - Multi-pin connector, 8-pin, brown (T8y)

2 - Voltage supply to multimedia system operating unit -E380-

3 - Wake-up to multimedia system operating unit -E380-

6 - Res MU to multimedia system operating unit -E380-

7 - Open circuit diagnostic lead

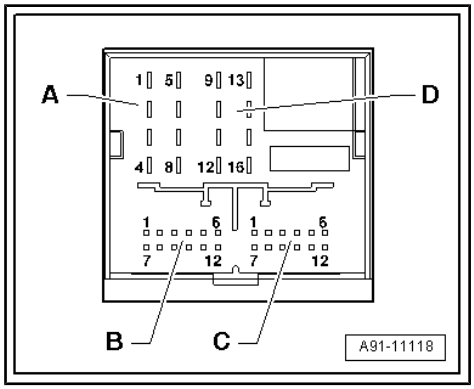

B - Multi-pin connector, 12-pin, blue (T12ac)

8 - Microphone input (+) from microphone unit in front roof module -R164- (front left microphone -R140-), left-hand drive

- Microphone input (+) from microphone unit in front roof module -R164- (front right microphone -R141-), right-hand drive

9 - Microphone input (–) from microphone unit in front roof module -R164- (front left microphone -R140-), left-hand drive

- Microphone input (–) from microphone unit in front roof module -R164- (front right microphone -R141-), right-hand drive

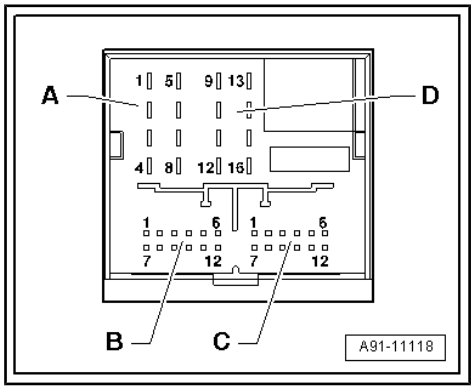

D - Multi-pin connector, 8-pin, black (T8z)

10 - Data from multimedia system operating unit -E380-

11 - Data to multimedia system operating unit -E380-

12 - Terminal 31

14 - Res BT from multimedia system operating unit -E380-

15 - Terminal 30

16 - Earth to multimedia system operating unit -E380-

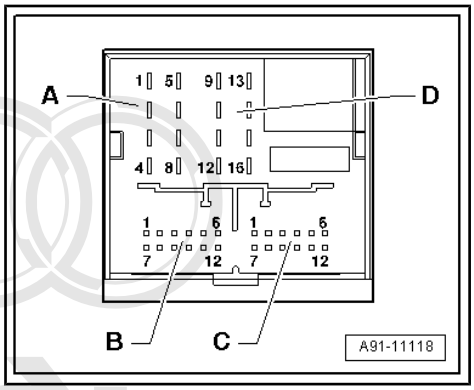

2 - MOST bus

1 - Input

2 - Output

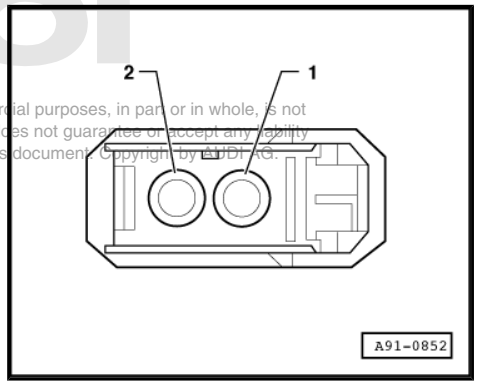

Protected by copyright. Copying for private or commercial purposes, in part or in whole, is not permitted unless authorised by AUDI AG. AUDI AG does not guarantee or accept any liability with respect to the correctness of information in this document. Copyright by AUDI AG.

6.20 Overview of fitting locations (up to week 35/08)

1 - Control unit for front display and information control panel -J523-

- ❑ Behind glove box

2 - Display unit for front information display and operating unit control unit -J685-

- ❑ In dash panel (centre)

- Multimedia system operating unit -E380-

- ❑ In centre console (bottom)

3 - Microphone unit in front roof module -R164-

- ❑ Overview ⇒ page 146
- ❑ Removing and installing ⇒ page 168

4 - Aerial amplifier for mobile telephone -R86-

- ❑ Behind C-pillar trim (right-side) at bottom
- ❑ Pin assignment (up to model year 2008) ⇒ page 156
- ❑ Removing and installing ⇒ page 167

5 - Telephone aerial -R65-

- ❑ Behind roof end trim (right-side) - up to MY 02
- ❑ Roof aerial system (from MY 03)
- ❑ Overview ⇒ page 85

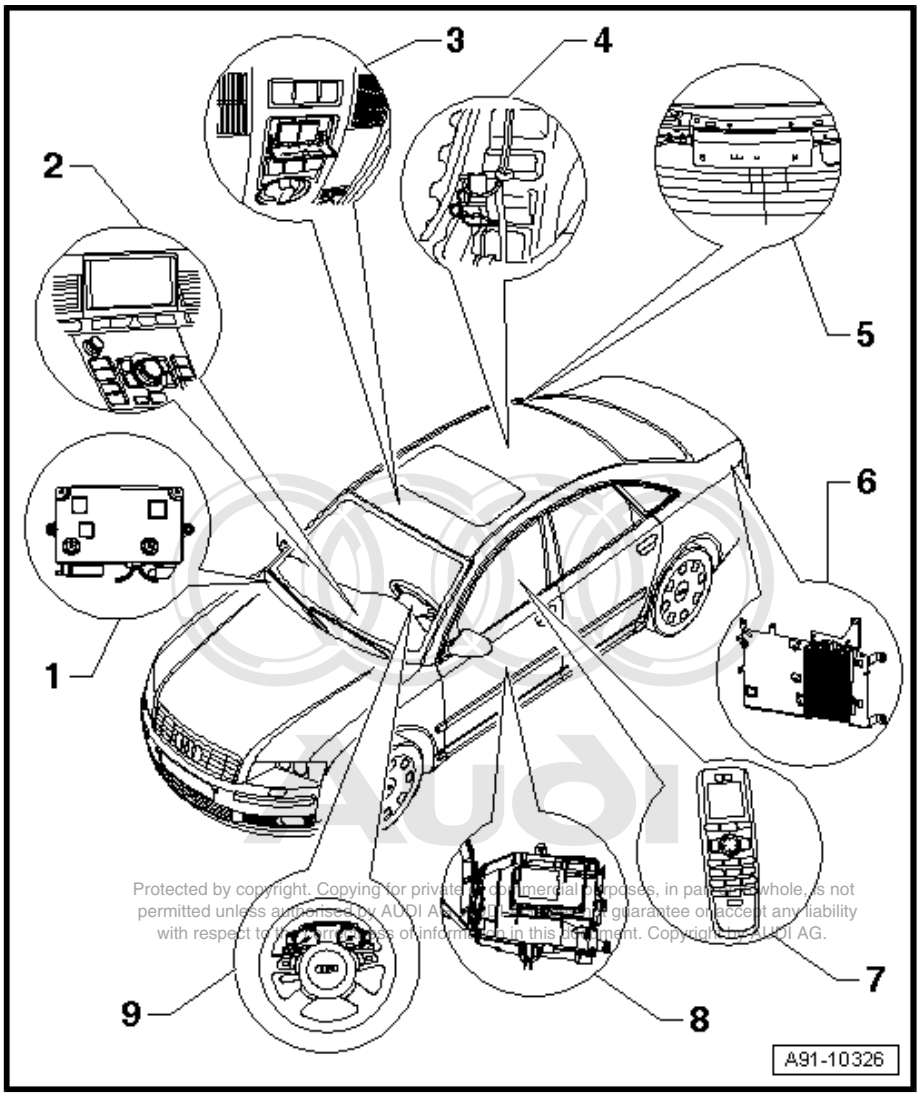

Protected by copyright. Copying for private or commercial purposes, in part or in whole, is not permitted unless authorised by AUDI AG. AUDI AG does not guarantee or accept any liability with respect to the correctness of information in this document. Copyright by AUDI AG.

6 - Digital sound package control unit -J525-

- ❑ Behind luggage compartment side trim (left-side)

7 - Telephone bracket -R126-

- ❑ In centre console (bottom)
- ❑ Removing and installing ⇒ page 161
- ❑ In centre armrest
- ❑ Removing and installing telephone bracket -R126- in front centre armrest ⇒ page 162
- ❑ Removing and installing telephone bracket -R126- in rear centre armrest ⇒ page 163
- ❑ Adapting telephone handset -R37- (permanently installed telephone) ⇒ page 164
- ❑ Removing and installing aerial for Bluetooth -R152- (permanently installed telephone) ⇒ page 165

8 - Telephone transmitter and receiver unit -R36-

- ❑ In front of front left seat beneath floor covering
- ❑ Pin assignment for permanently installed telephone ⇒ page 148
- ❑ Pin assignment of mobile phone pre-installation ⇒ page 149
- ❑ Pin assignment for Bluetooth car phone ⇒ page 153
- ❑ Removing and installing ⇒ page 166

9 - Multi-function steering wheel

- ❑ Removing and installing buttons ⇒ page 255

6.21 Overview of fitting locations (from week 36/08 onwards)

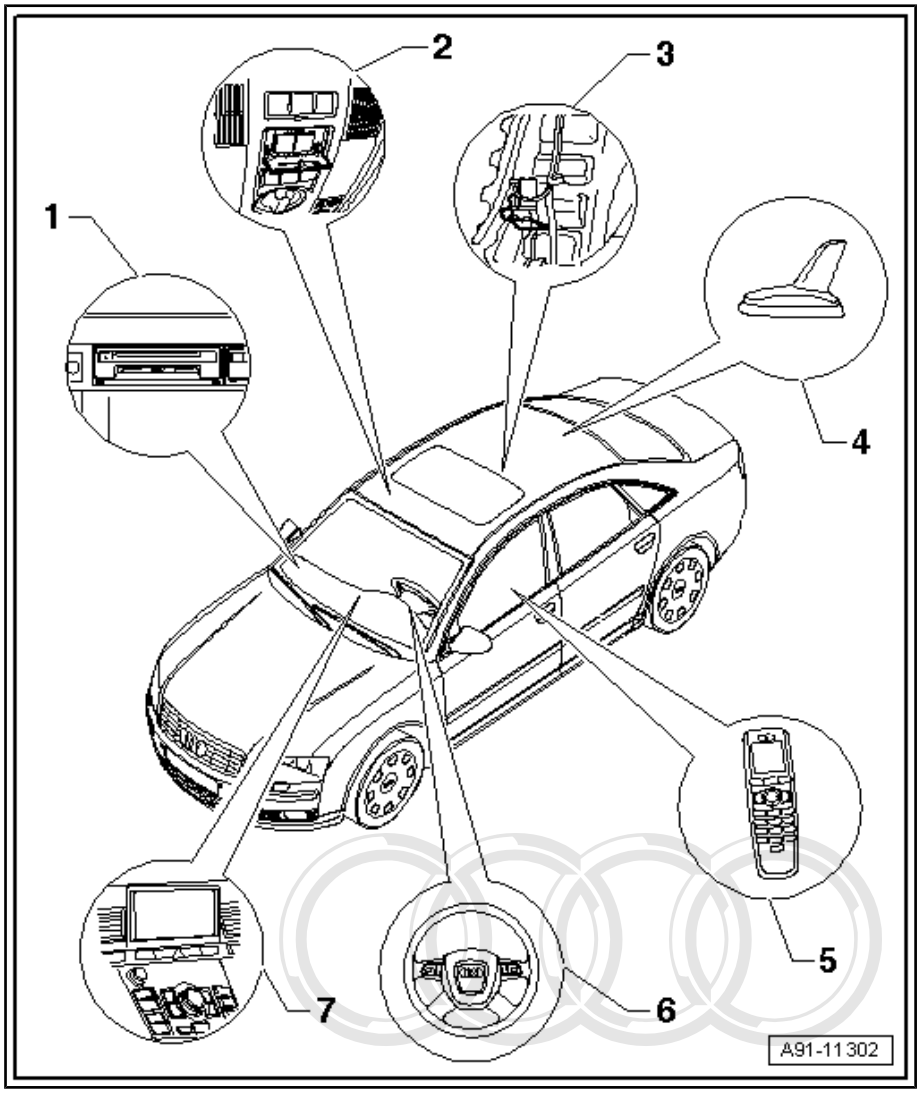

1 - Control unit 1 for information electronics -J794-

- ❑ Pin assignment of mobile phone pre-installation (from week 36/08 onwards) ⇒ page 151
- ❑ Pin assignment for Bluetooth car phone (from week 36/08 onwards) ⇒ page 154
- ❑ Pin assignment for Bluetooth hands-free system ⇒ page 157
- ❑ Removing and installing ⇒ page 21

2 - Microphone unit in front roof module -R164-

- ❑ Overview (from week 36/08 onwards) ⇒ page 148
- ❑ Removing and installing ⇒ page 168

3 - Aerial amplifier for mobile telephone -R86-

- ❑ Pin assignment (from model year 2009 onwards) ⇒ page 156
- ❑ Removing and installing ⇒ page 167

4 - Roof aerial -R216-

- ❑ Overview ⇒ page 85

5 - Telephone bracket -R126-

- ❑ In centre console (bottom)
- ❑ Removing and installing ⇒ page 161
- ❑ In centre armrest
- ❑ Removing and installing ⇒ page 162

6 - Multi-function steering wheel

- ❑ Removing and installing buttons ⇒ page 255

Protected by copyright. Copying for private or commercial purposes, in part or in whole, is not permitted unless authorised by AUDI AG. AUDI AG does not guarantee or accept any liability with respect to the correctness of information in this document. Copyright by AUDI AG.

7 - Display unit for front information display and operating unit control unit -J685-

- ❑ In dash panel (centre)

- Multimedia system operating unit -E380-

- ❑ In centre console (bottom)

6.22 Removing and installing telephone bracket -R126- (centre console)

Special tools and workshop equipment required

- Removal wedge -3409-

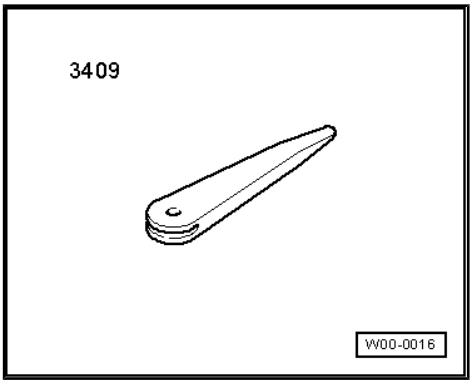

– Switch off all electrical equipment.

– Remove ignition key.

Removing

– Remove telephone handset -R37- from telephone bracket -R126- .

– Remove SIM card from telephone bracket -R126- .

– Pry the storage compartment out of the centre console starting from the front corners -arrow 1- using removal wedge -3409- and move storage compartment towards the front -arrow 2-.

Protected by copyright. Copying for private or commercial purposes, in part or in whole, is not permitted unless authorised by AUDI AG. AUDI AG does not guarantee or accept any liability with respect to the correctness of information in this document. Copyright by AUDI AG.

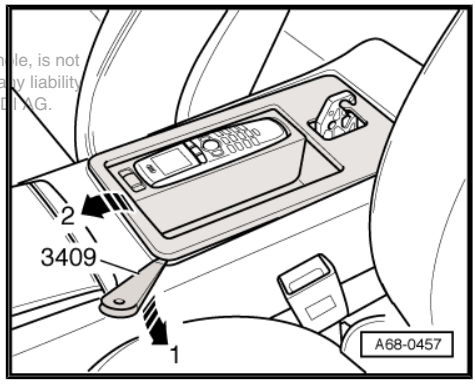

– Unplug connectors -1- and -2- and remove storage compartment.

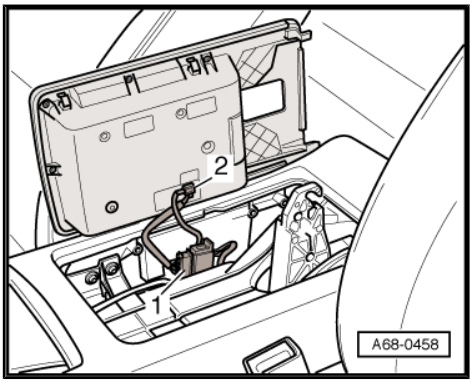

– Unscrew bolts -3- (2 Nm) and lift off telephone bracket -R126- -1- from storage compartment -2-.

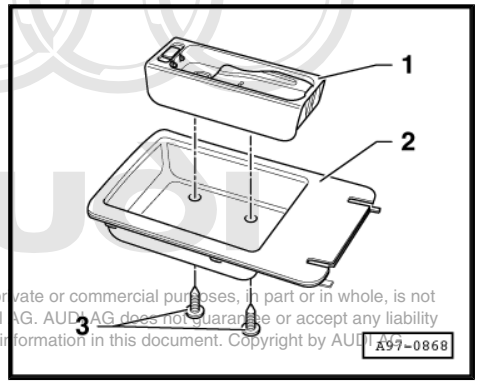

Installing

– Installation is performed in reverse sequence.

Protected by copyright. Copying for private or commercial purposes, in part or in whole, is not permitted unless authorised by AUDI AG. AUDI AG does not guarantee or accept any liability with respect to the correctness of information in this document. Copyright by AUDI AG.

6.23 Removing and installing telephone bracket -R126- (front centre armrest)

6.23.1 Removing and installing telephone bracket -R126-

– Switch off all electrical equipment.

– Remove ignition key.

Removing

– Remove telephone handset -R37- -1- from telephone bracket -R126- .

– Remove SIM card from telephone bracket -R126- .

– Carefully pry the storage compartment -2- out of the trim and the bottom cover -3- starting from the front -arrow-.

– Unplug connector for wiring harness and remove storage compartment.

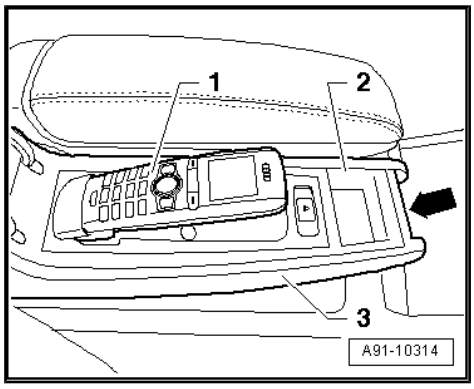

– Turn storage compartment over to unscrew bolts -1- and -2- (2 Nm).

– Unplug connector -arrow- on underside.

– Press telephone bracket -R126- out of storage compartment.

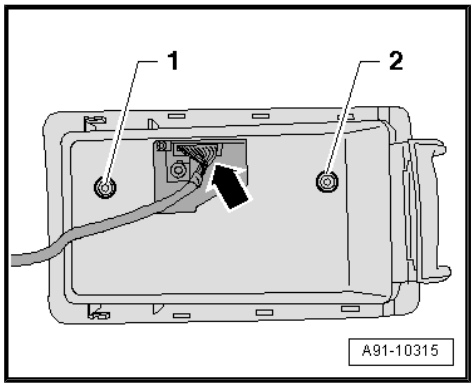

Installing

– Installation is performed in reverse sequence.

6.23.2 Removing and installing wiring harness for centre armrest

– Switch off all electrical equipment.

– Remove ignition key.

Removing

Start by removing the front centre armrest in the centre console.

– Lift off upper support bracket trim -1-.
– Unscrew bolts -2- (15 Nm) and swivel centre armrest to side.

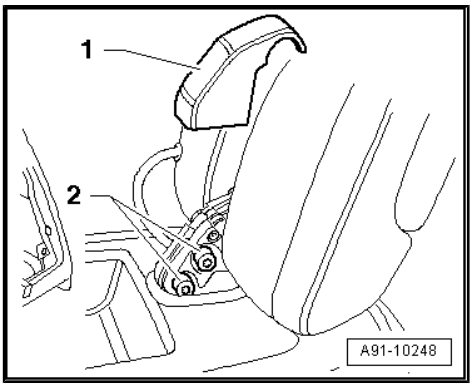

– Unclip storage compartment -2- from centre console.
– Pull wire -1- out of storage compartment -2- in direction of -arrow-.
– Unplug connector under storage compartment.

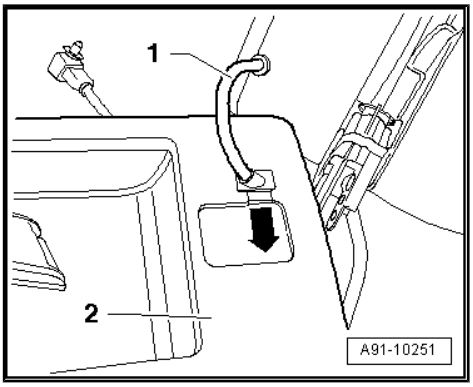

Installing

– Installation is performed in reverse sequence.

Protected by copyright. Copying for private or commercial purposes, in part or in whole, is not permitted unless authorised by AUDI AG. AUDI AG does not guarantee or accept any liability with respect to the correctness of information in this document. Copyright by AUDI AG.

6.24 Removing and installing telephone bracket -R126- (rear centre armrest)

Remove rear centre armrest prior to removing telephone bracket -R126- / rear charger unit for telephone -R151- .

Removing

– Remove rear centre armrest ⇒ General body repairs, interior; Rep. Gr. 68 .
– Detach top section from bottom section ⇒ General body repairs, interior; Rep. Gr. 68 .
– Unscrew bolts -1- and -2- (2 Nm) on reverse side of top section.
– Remove mounting for telephone bracket -R126- from top section.

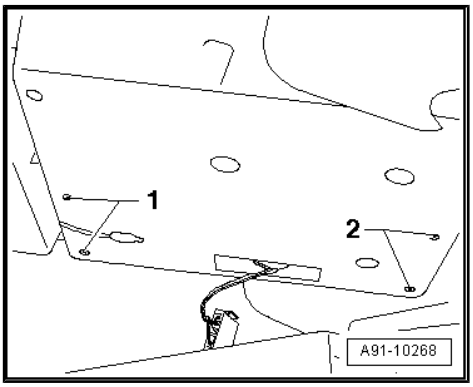

– Turn mounting -3- over and unplug connector -2-.
– Unscrew bolts -arrows- (2 Nm).
– Press telephone bracket -R126- -1- out of mounting -3-.

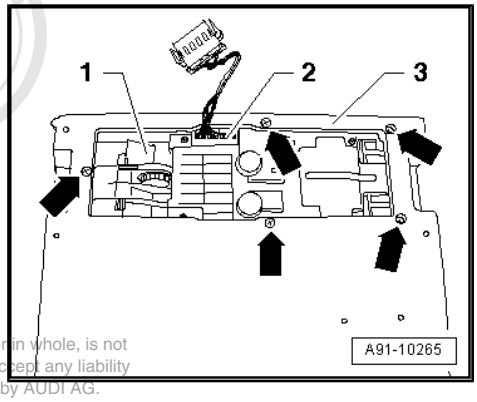

Installing

– Installation is performed in reverse sequence.

Protected by copyright. Copying for private or commercial purposes, in part or in whole, is not permitted unless authorised by AUDI AG. AUDI AG does not guarantee or accept any liability with respect to the correctness of information in this document. Copyright by AUDI AG.

6.25 Adapting telephone handset -R37- (permanently installed telephone)

6.25.1 Up to model year 2002

If the telephone transmitter and receiver unit -R36- has been renewed, the Bluetooth connection between the telephone transmitter and receiver unit -R36- and telephone handset -R37- must be readapted (rematched).

The adaption process is performed using the menu on telephone handset -R37- .

– Switch on the MMI and telephone handset -R37- . The telephone handset -R37- rests in the telephone bracket -R126- .
– Press the “Menu” button on telephone handset -R37- and select Bluetooth.
– Confirm with OK button.
– Select “Vehicle Base Station” and confirm with OK button.
– Select “New Scan” and confirm with OK button.The scanning process will begin. The process takes up to 30 seconds.

If the Bluetooth unit is detected, its name will appear in the display on handset -R37- : “BT-Audi D3”.

– Select “Connect”.

A message will appear in the display of the telephone handset -R37- reading “Connection confirmed”.

– Then check the telephone for proper function.

6.25.2 From model year 2003 onwards

If the telephone transmitter and receiver unit -R36- or the telephone handset -R37- have been renewed, the Bluetooth connection between the telephone transmitter and receiver unit -R36- and telephone handset -R37- must be readapted (rematched).

The adaption process is performed using the menu on telephone handset -R37- .

Start by erasing all Bluetooth data in the telephone handset -R37- .

– Switch on the MMI and telephone handset -R37- . The telephone handset -R37- rests in the telephone bracket -R126- .
– After the Motorola logo has appeared in the telephone handset -R37- , press the C button until the display “menu” appears.

– Press the “Menu” button on telephone handset -R37- and select Bluetooth.

– Choose “Devices” and confirm using the Menu button.

– Choose “Erase” and confirm using the Select key.

– Erase every single entry on the list.

Continue:

– Go back in the “Menu” until “Bluetooth” is displayed.

– Confirm entry with Select key in the display.

– Choose “Vehicle Base Station” and confirm using the Select key.

– Select “New Scan” and confirm with the Select key. The scanning process will begin. The process takes up to 30 seconds.

If the Bluetooth unit is detected, its name will appear in the handset display: “Audi Phone 1234567”.

The MMI displays “Generating connection”.

– Confirm using the rotary pushbutton.

“Bluetooth PIN” will then appear in the MMI display.

– Confirm using the rotary pushbutton.

The PIN entry field must be selected prior to confirming.

An input mask will appear in the display into which the Bluetooth PIN is entered.

– Enter any desired 4-digit PIN code into the MMI and confirm entry with rotary pushbutton. Be sure to make a note of the PIN code.

You will then be requested by the MMI to enter the SAME PIN code into the telephone handset -R37- .

– Enter the same PIN code into the handset -R37- and confirm the entry using the “Select” key.

A message will appear in the MMI display confirming the bonding process with the handset -R37- .

Note

The “Bluetooth PIN” does not refer in any way to the PIN of the SIM card. The entry of the “Bluetooth PIN” is required only during the adaption process. Therefore it is not necessary to supply the customer with the “Bluetooth PIN”.

– Then check the telephone for proper function.

6.26 Removing and installing aerial for Bluetooth -R152- (centre console)

The aerial for Bluetooth -R152- is fitted separately in the centre console (only with permanently installed telephone).

Only one aerial for Bluetooth -R152- is fitted for all telephone handsets -R37- installed in vehicle.

Reproduction, copying or copying for private or commercial purposes, in part or in whole, is not permitted unless authorised by AUDI AG. AUDI AG does not guarantee or accept any liability with respect to the correctness of information in this document. Copyright by AUDI AG.

Aerial for Bluetooth -R152- -1- is bonded to air distribution housing in centre console -2- (rear right).

– Switch off all electrical equipment.

– Remove ignition key.

Removing

– Remove centre console ⇒ General body repairs, interior; Rep. Gr. 68 .

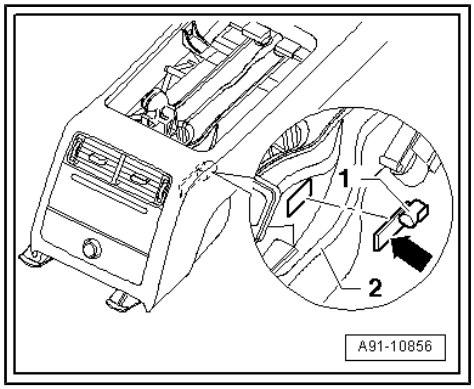

– Use a suitable tool to remove aerial for Bluetooth -R152- -1- and unplug connector.

Installing

– Clean bonding area at air duct.

– Start by attaching connector.

The aerial for Bluetooth -R152- is supplied with adhesive tape fitted.

– Remove protective coating from adhesive tape on aerial for Bluetooth -R152- .

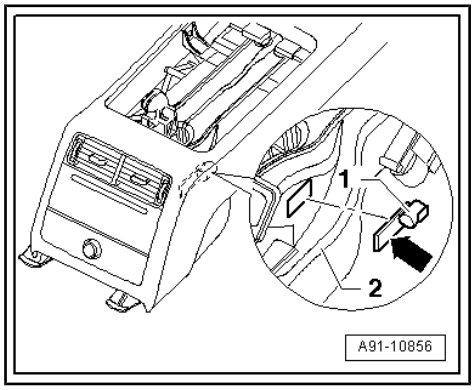

– Press aerial for Bluetooth -R152- -1- (approx. 10 N, 3-5 seconds) onto bonding area in direction of -arrow-.

– Perform further installation in reverse sequence.

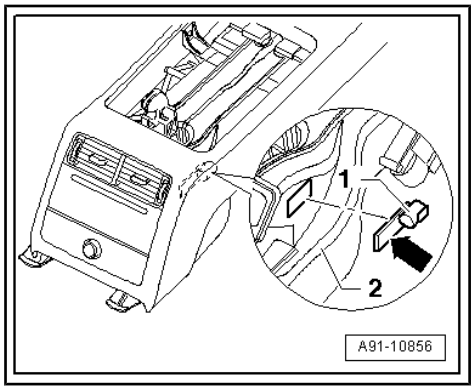

6.27 Removing and installing telephone transmitter and receiver unit -R36-

Special tools and workshop equipment required

♦ Repair set for fibre optic cables -VAS 6223-

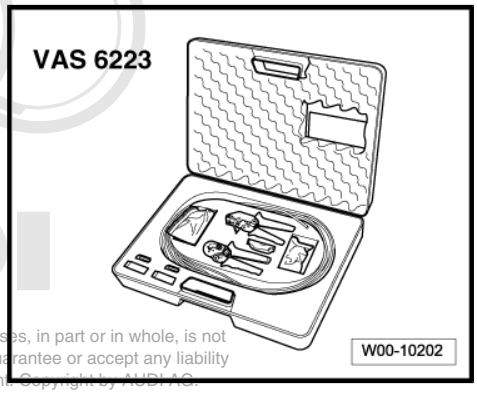

Protected by copyright. Copying for private or commercial purposes, in part or in whole, is not permitted unless authorised by AUDI AG. AUDI AG does not guarantee or accept any liability with respect to the correctness of information in this document. Copyright by AUDI AG.

♦ Protective cap for cable connector -VAS 6223/9-

– When renewing control unit, select “Replacement” function for appropriate control unit in “Guided Fault Finding”.

To do so, use the vehicle diagnostic, testing and information system -VAS 5051- .

– Switch off all electrical equipment.

– Remove ignition key.

Removing

– Remove front seat (left-side) ⇒ General body repairs, interior; Rep. Gr. 72 .

– Fold back floor covering ⇒ General body repairs, interior; Rep. Gr. 70 .

– Release electronics box cover and open box -arrows-.

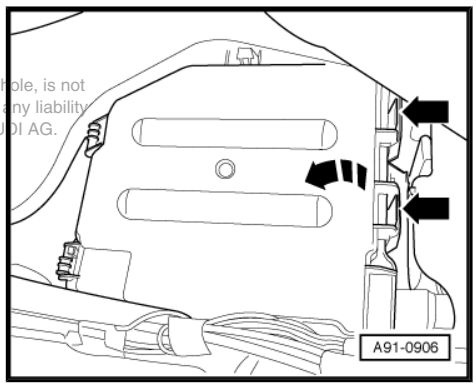

The telephone transmitter and receiver unit -R36- is only wedged in the electronics box.

Protected by copyright. Copying for private or commercial purposes, in part or in whole, is not permitted unless authorised by AUDI AG. AUDI AG does not guarantee or accept any liability with respect to the correctness of information in this document. Copyright by AUDI AG.

– Pry the telephone transmitter and receiver unit -R36- -1- out of electronics box -2- in direction of arrow.

– If fitted, detach aerial for Bluetooth -R152- at telephone transmitter and receiver unit -R36- -1-.

– Unplug all connectors at telephone transmitter and receiver unit -R36- -1-.

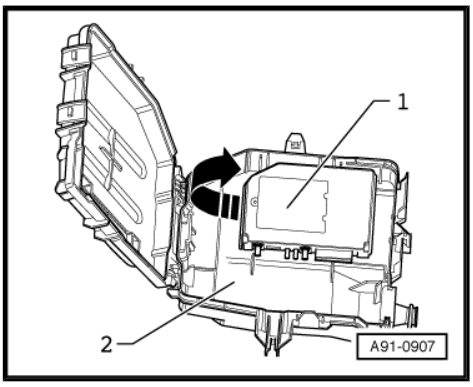

– Fit protective cap for cable connector -VAS 6223/9- -1- onto MOST bus connector -2-.

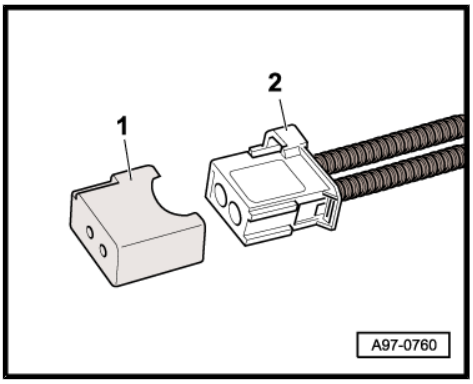

Installing

– Installation is performed in reverse sequence.

Vehicles with fixed installation telephone

– Readapt Bluetooth connection between telephone transmitter and receiver unit -R36- and telephone handset -R37- ⇒ page 164 .

6.28 Removing and installing aerial amplifier for mobile telephone -R86-

– Switch off all electrical equipment.

– Remove ignition key.

Removing

– Remove C-pillar trim (right-side) ⇒ General body repairs, interior; Rep. Gr. 70 .

– Unplug all connectors at aerial amplifier for mobile telephone -R86- -2-.
– Unscrew bolts -3- (3 Nm) and detach aerial amplifier for mobile telephone -R86- -2- with bracket -1-.
– Unscrew bolts -4- (3 Nm) and detach aerial amplifier for mobile telephone -R86- -2- from bracket -1-.

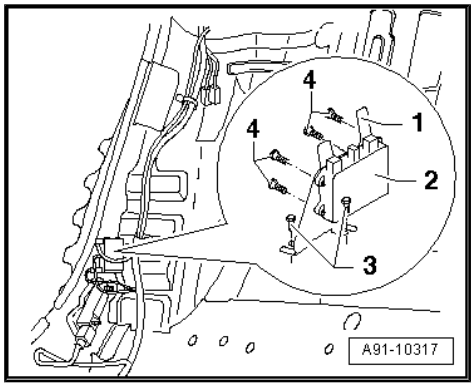

Installing

– Installation is performed in reverse sequence.

6.29 Removing and installing microphone unit in front roof module -R164-

Protected by copyright. Copying for private or commercial purposes, in part or in whole, is not permitted unless authorised by AUDI AG. AUDI AG does not guarantee or accept any liability with respect to the correctness of information in this document. Copyright by AUDI AG.

The microphone unit in the front roof module -R164- consists of up to 3 microphones. The microphone unit in the front roof module -R164- can only be renewed as a complete unit.

– Switch off all electrical equipment.
– Remove ignition key.

Removing

– Remove front interior light -W1- ⇒ Electrical system; Rep. Gr. 96 .
– Unclip connector -2- from retainer -1-.

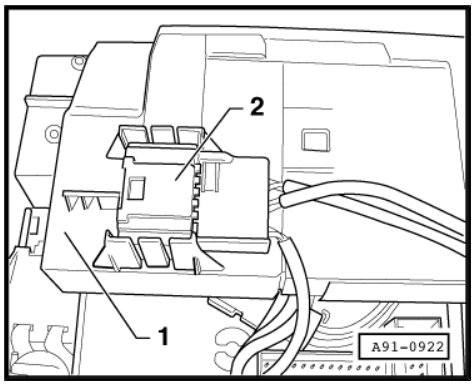

– Pry the individual microphones -2- out of retainer in direction of arrow.

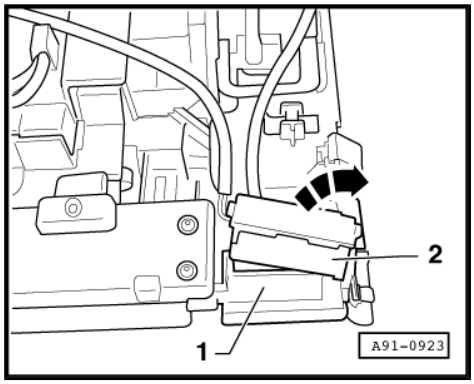

Installing

– Installation is performed in reverse sequence.

7 Telephone system (USA)

7.1 General notes (up to week 21/09)

The telephone system consists of the mobile phone pre-installation components with and without telematics.

The telephone and telematics control unit -J526- is linked to the communications system via the CAN Bus (convenience).

The mobile telephone operating electronics control unit -J412- is linked to the MMI infotainment system via the MOST Bus.

The telephone bracket -R126- is fitted in the centre console/centre armrest. The mobile telephone -R54- is used for operation.

Microphones for the microphone unit in front roof module -R164- are integrated in the front interior light -W1- . One microphone (telephone microphone -R38-) is connected directly to the telephone and telematics control unit -J526- .

Fault finding is performed via the “Guided Fault Finding” ⇒ Vehicle diagnosis, testing and information system VAS 5051.

Repairing aerial wiring ⇒ Electrical system; Rep. Gr. 97 .

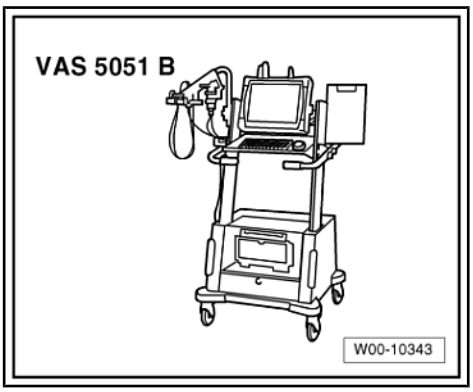

Notes on Bluetooth technology

A standardised radio connection system (Bluetooth technology) is used to transmit data between the mobile telephone operating electronics control unit -J412- and the mobile telephone -R54- .

An additional transmitter and receiver unit is fitted in the mobile telephone operating electronics control unit -J412- . A separate aerial for Bluetooth -R152- links the mobile telephone operating electronics control unit -J412- and the mobile telephone -R54- , allowing cordless operation of the mobile telephone -R54- .

Protected by copyright. Copying, distribution and use not permitted, unless authorised by AUDI AG. Audi AG does not guarantee or accept any liability with respect to the correctness of information in this document. Copyright by AUDI AG.

The range of the radio wave connection is approx. 10 m.

For more information, refer to ⇒ Self-study programme No. 286 ; "New data bus systems - LIN, MOST, Bluetooth" .

7.2 General notes (from week 36/08 onwards)

The telephone system consists of the following versions:

- Mobile phone pre-installation in control unit 1 for information electronics -J794-

The telephone bracket -R126- is fitted in the centre console. The system is operated using the MMI infotainment system or the mobile telephone -R54- .

Microphones for the microphone unit in front roof module -R164- are integrated in the front interior light -W1- . One of these microphones is connected directly to the control unit 1 for information electronics -J794- .

The aerial connection is located at the telephone bracket -R126- .

- Bluetooth hands-free system in control unit 1 for information electronics -J794-

The control unit 1 for information electronics -J794- with microphone unit in front roof module -R164- is fitted and used as a hands-free system only. It is connected to the mobile telephone -R54- via Bluetooth.

The aerial for Bluetooth -R152- is fitted in the control unit 1 for information electronics -J794- .

Fault finding is performed via the “Guided Fault Finding” ⇒ Vehicle diagnosis, testing and information system VAS 5051.

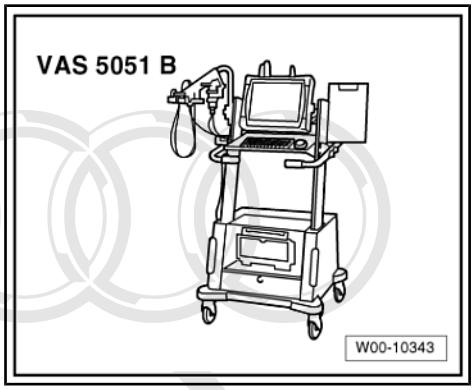

Repairing aerial wiring ⇒ Electrical system; Rep. Gr. 97 .

Notes on Bluetooth technology

A standardised radio connection system (Bluetooth technology) is used to transmit data between the control unit 1 for information electronics -J794- and the telephone handset -R37- / mobile telephone -R54- .

An additional transmitter and receiver unit is fitted in the control unit 1 for information electronics -J794- . A separate aerial for Bluetooth -R152- links the control unit 1 for information electronics -J794- and the telephone bracket -R126- / mobile telephone -R54- , allowing cordless operation of the telephone handset -R37- / mobile telephone -R54- .

The range of the radio wave connection is approx. 10 m.

For more information, refer to ⇒ Self-study programme No. 286 : "New data bus systems - LIN, MOST, Bluetooth" .

Protected by copyright. Copying for private or commercial purposes, in part or in whole, is not permitted unless authorised by AUDI AG. AUDI AG does not guarantee or accept any liability with respect to the correctness of information in this document. Copyright by AUDI AG.

7.3 Mobile phone pre-installation with telematics - layout

1 - Display unit for front information display and operating unit control unit -J685- in dash panel (centre)

2 - Control unit for front display and information control panel -J523- behind glove box

3 - Multimedia system operating unit -E380- in centre console (bottom)

4 - MOST bus

5 - Digital sound package control unit -J525- behind luggage compartment side trim (left-side)

6 - Sound systems

7 - Telephone and telematics control unit -J526- in front of front seat (left-side) beneath floor covering

8 - Mobile telephone -R54- in telephone bracket -R126-

9 - Telephone bracket -R126- in centre console/centre armrest

10 - Telephone aerial -R65- (GSM) behind roof end trim (right-side)

11 - Radio, telephone and navigation system aerial -R52- (additional GSM), roof aerial

12 - Radio, telephone and navigation system aerial -R52-

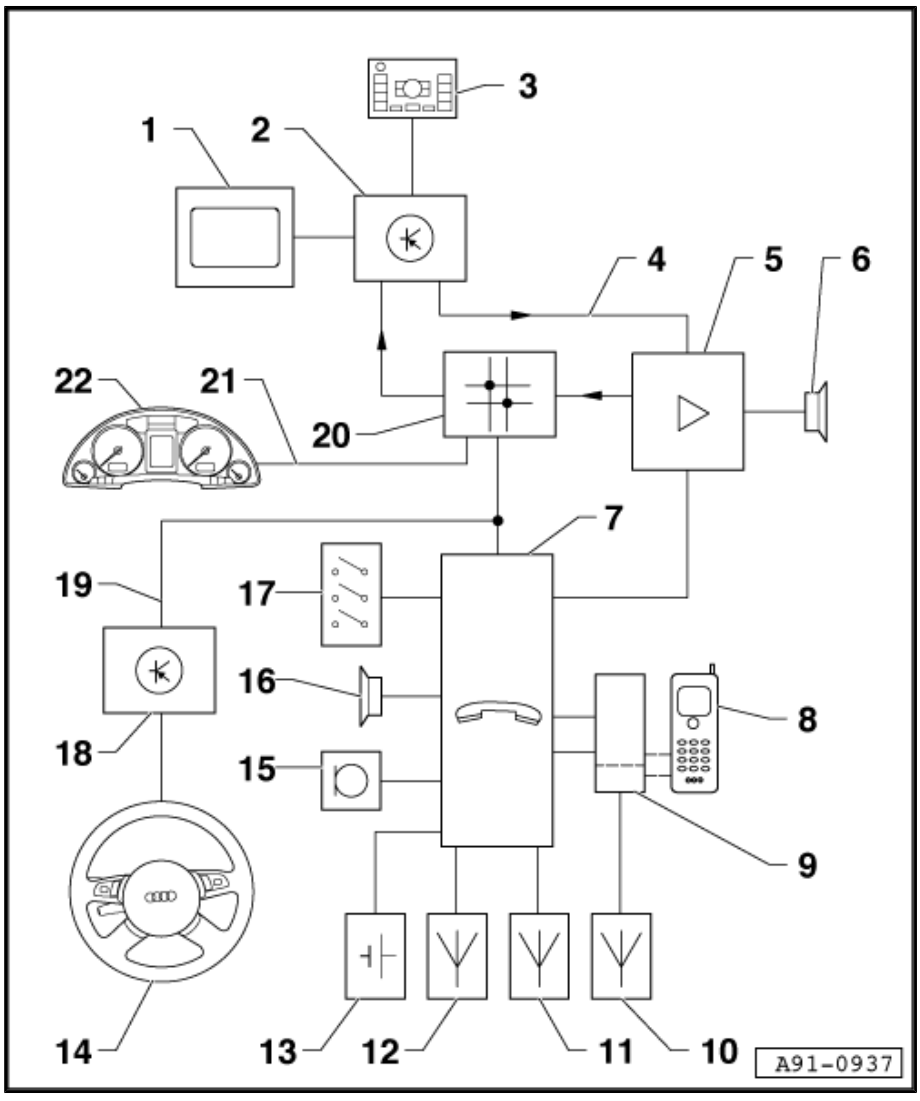

(Ter/Sat/GPS/additional GSM), roof aerial

13 - Emergency battery, telematics -A16- on telephone and telematics control unit -J526-

14 - Multi-function steering wheel

15 - Microphone unit in front roof module -R164- (telephone microphone -R38-) in front interior light -W1-

16 - Additional loudspeaker for telematics -R91- in B-pillar trim (right-side)

17 - Telematics operating unit -E264- in front interior light -W1-

18 - Steering column electronics control unit -J527- on steering column on steering column switch

19 - CAN bus (convenience)

20 - Data bus diagnostic interface -J533- behind glove box

21 - CAN bus (instrument cluster)

22 - Control unit in dash panel insert -J285- (instrument cluster) in dash panel

7.4 Mobile phone pre-installation without telematics (up to week 21/09) - layout

1 - Telephone bracket -R126- in centre console/centre armrest

2 - Display unit for front information display and operating unit control unit -J685- in dash panel (centre)

3 - Control unit for front display and information control panel -J523- behind glove box

4 - Multimedia system operating unit -E380- in centre console (bottom)

5 - Data bus diagnostic interface -J533- behind glove box

6 - Control unit in dash panel insert -J285- (instrument cluster) in dash panel

7 - Steering column electronics control unit -J527- on steering column on steering column switch

8 - Multi-function steering wheel

9 - Microphone unit in front roof module -R164- in front interior light -W1-

10 - Digital sound package control unit -J525- behind luggage compartment side trim (left-side)

11 - Sound systems

12 - Mobile telephone operat-

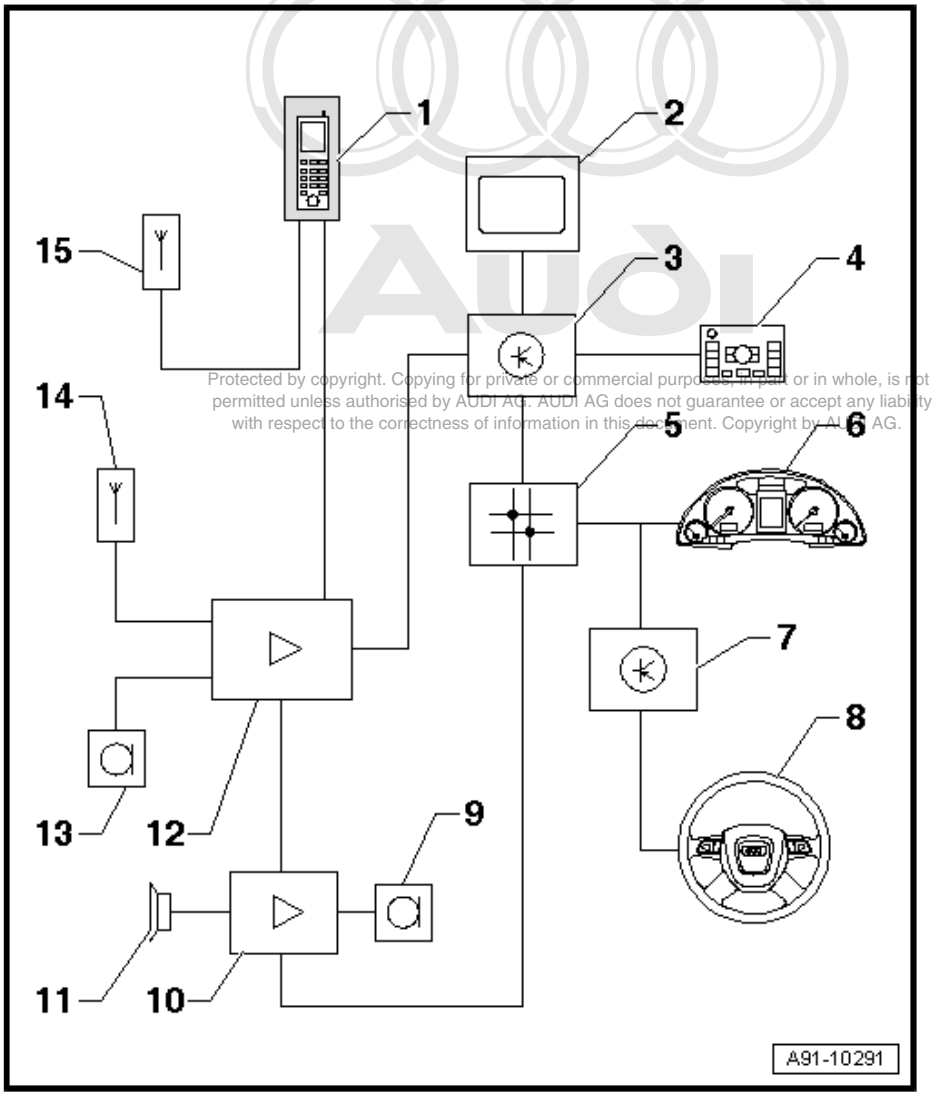

Protected by copyright. Copying for private or commercial purposes, in part or in whole, is not permitted unless authorised by AUDI AG. AUDI AG does not guarantee or accept any liability with respect to the correctness of information in this document. Copyright by AUDI AG.

ing electronics control unit -J412- in front of front seat (left-side) beneath floor covering

13 - Microphone unit in front roof module -R164- (telephone microphone -R38-) in front interior light -W1-

14 - Aerial for Bluetooth -R152- on mobile telephone operating electronics control unit -J412-

15 - Radio, telephone and navigation system aerial -R52- (SAT/GPS/GSM), roof aerial

7.5 Mobile phone pre-installation (from week 22/09 onwards) - layout

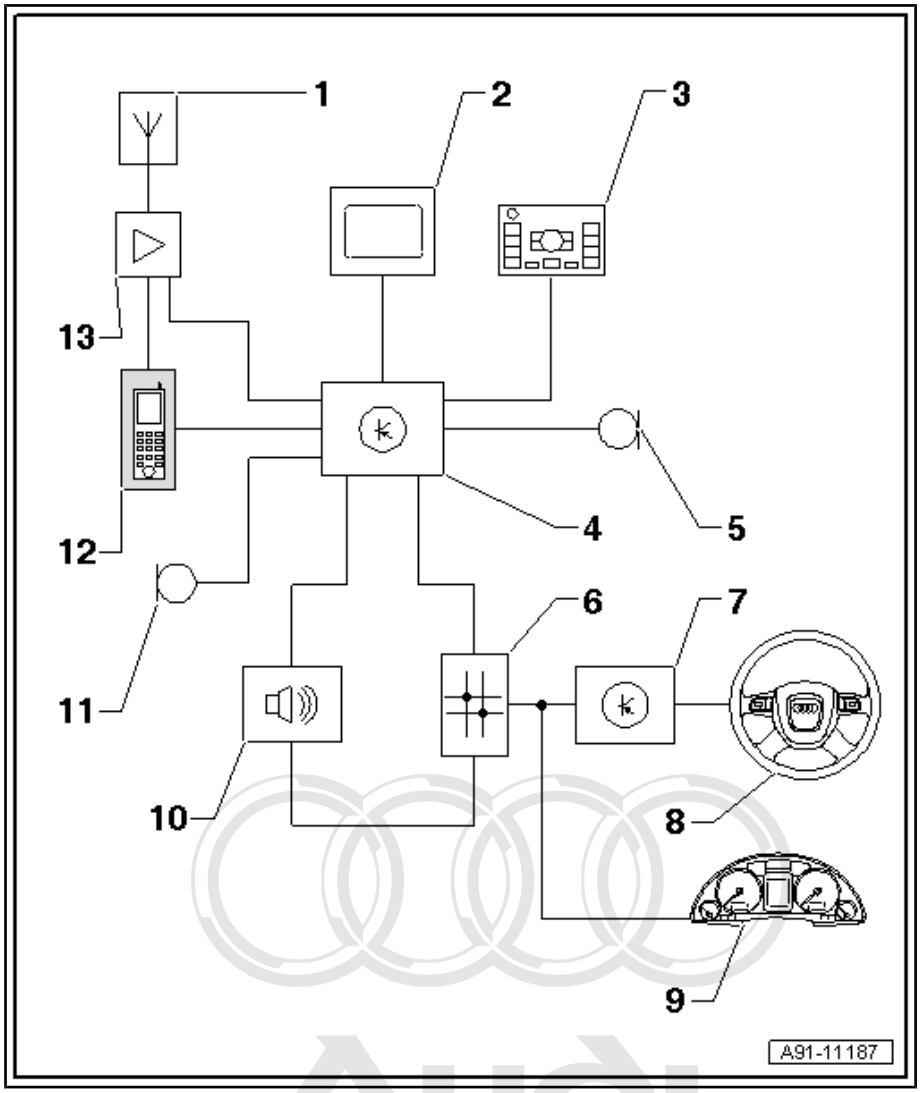

1 - Roof aerial -R216- (GPS/ GSM/RC)

2 - Display unit for front information display and operating unit control unit -J685- in dash panel (centre)

3 - Multimedia system operating unit -E380- in centre console (bottom)

4 - Control unit 1 for information electronics -J794- in glove box (left-side)

5 - Microphone unit in front roof module -R164- (front right microphone -R141-) in front interior light -W1-

6 - Data bus diagnostic interface -J533- behind glove box

7 - Steering column electronics control unit -J527- on steering column on steering column switch

8 - Multi-function steering wheel

9 - Control unit in dash panel insert -J285- (instrument cluster) in dash panel

10 - Digital sound package control unit -J525- behind luggage compartment side trim (left-side)

11 - Microphone unit in front roof module -R164- (front left microphone -R140-) in front interior light -W1-

12 - Telephone bracket -R126- with mobile telephone -R54-

13 - Aerial amplifier for mobile telephone -R86- behind right C-pillar trim at bottom

Protected by copyright. Copying for private or commercial purposes, in part or in whole, is not permitted unless authorised by AUDI AG. AUDI AG does not guarantee or accept any liability with respect to the correctness of information in this document. Copyright by AUDI AG.

7.6 Bluetooth hands-free system - layout

1 - Display unit for front information display and operating unit control unit -J685- in dash panel (centre)

2 - Multimedia system operating unit -E380- in centre console (bottom)

3 - Microphone unit in front roof module -R164- (front right microphone -R141-) in front interior light -W1-

4 - Control unit 1 for information electronics -J794- with aerial for Bluetooth -R152- in glove box (left-side)

5 - Data bus diagnostic interface -J533- behind glove box

6 - Digital sound package control unit -J525- behind luggage compartment side trim (left-side)

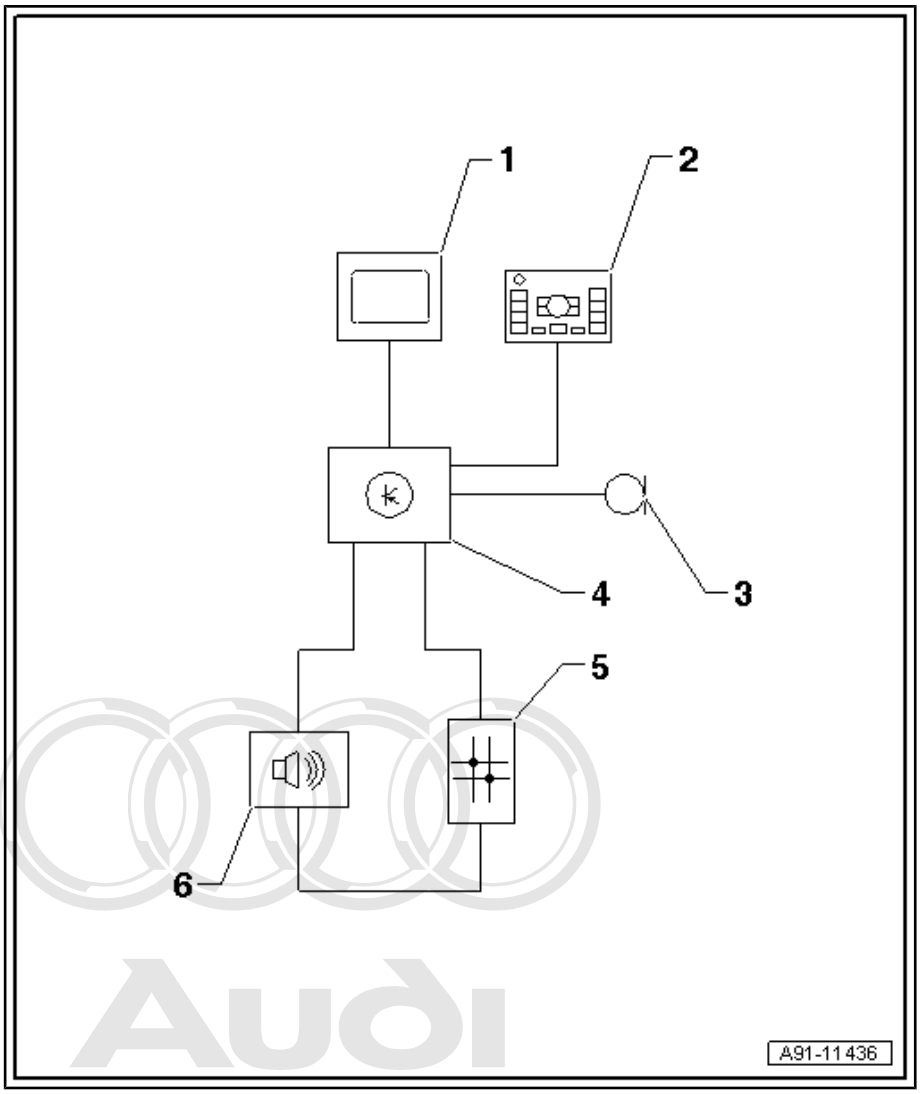

Protected by copyright. Copying for private or commercial purposes, in part or in whole, is not permitted unless authorised by AUDI AG. AUDI AG does not guarantee or accept any liability with respect to the correctness of information in this document. Copyright by AUDI AG.

7.7 Connectors for mobile phone pre-installation with telematics

Telephone/telematics control unit -J526-

A - Multi-pin connector, 42-pin, blue (T42a)

B - GPS connection (blue) from radio, telephone and navigation system aerial -R52-

C - Additional GSM connection (purple) from radio, telephone and navigation system aerial -R52-

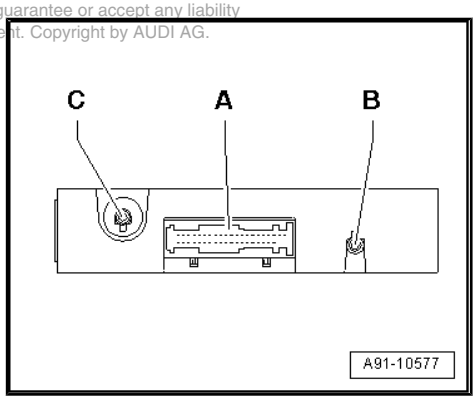

Note

Contacts which are not listed are not used.

A - Multi-pin connector, 42-pin, blue (T42a)

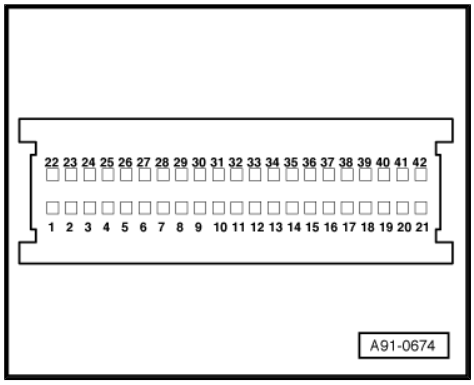

3 - Microphone output (+) to telephone bracket -R126-

4 - Battery feedback from telephone bracket -R126-

5 - Earth to telephone bracket -R126-

6 - Ser-Tx (+) to telephone bracket -R126-

8 - Screen earth, telephone bracket -R126-

9 - CAN Bus High (convenience)

10 - NF (+) (low frequency) to digital sound package control unit -J525-

11 - Additional loudspeaker for telematics -R91- (+)

12 - Microphone input (+) from microphone unit in front roof module -R164- (telephone microphone -R38-)

13 - K wire

14 - Terminal 75

15 - LED “red” to telematics operating unit -E264-

16 - LED “green” to telematics operating unit -E264-

18 - Terminal 31

19 - Terminal 31

24 - NF (+) (low frequency) from telephone bracket -R126-

25 - Microphone output (–) to telephone bracket -R126-

26 - Terminal 30 to telephone bracket -R126-

27 - Ser-Rx (+) from telephone bracket -R126-

30 - CAN Bus Low (convenience)

31 - NF (–) (low frequency) to digital sound package control unit -J525-

32 - Additional loudspeaker for telematics -R91- (–)

33 - Microphone input (–) from microphone unit in front roof module -R164- (telephone microphone -R38-)

34 - NF mute (low frequency) to control unit for front display and information control panel -J523-

35 - From telematics operating unit -E264-

36 - To telematics operating unit -E264-

38 - Crash signal from airbag control unit -J234-

39 - Terminal 30

40 - Terminal 30

41 - Emergency battery, telematics -A16- (+)

42 - Emergency battery, telematics -A16- (–)

Protected by copyright. Copying for private or commercial purposes, in part or in whole, is not permitted unless authorised by AUDI AG. AUDI AG does not guarantee or accept any liability with respect to the correctness of information in this document. Copyright by AUDI AG.

7.8 Connectors for mobile phone pre-installation (up to week 21/09)

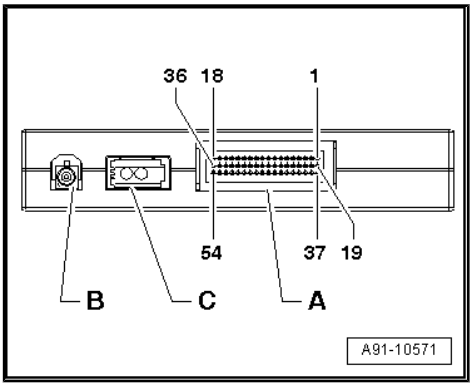

Mobile telephone operating electronics control unit -J412-

A - Multi-pin connector, 54-pin, black (T54)

B - Connection (yellow) for aerial for Bluetooth -R152-

C - MOST bus

Note

Contacts which are not listed are not used.

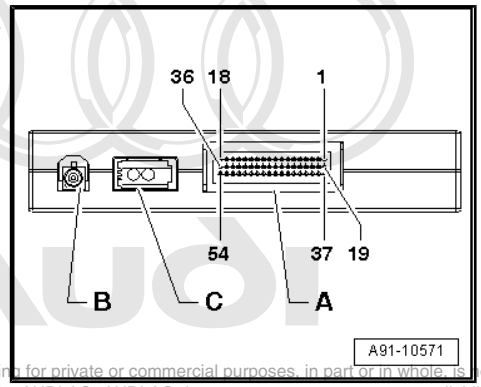

Protected by copyright. Copying for private or commercial purposes, in part or in whole, is not permitted unless authorised by AUDI AG. AUDI AG does not guarantee or accept any liability with respect to the correctness of information in this document. Copyright by AUDI AG.

A - Multi-pin connector, 54-pin, black (T54)

1 - Terminal 30

2 - Terminal 31

11 - Microphone input (+) from microphone unit in front roof module -R164- (telephone microphone -R38-)

12 - Microphone input (–) from microphone unit in front roof module -R164- (telephone microphone -R38-)

14 - Open circuit diagnostic lead

37 - Terminal 30 to telephone bracket -R126-

39 - Terminal 31 to telephone bracket -R126-

41 - Terminal 30 to telephone bracket -R126-

42 - Microphone output (+) to telephone bracket -R126-

43 - Microphone output (–) to telephone bracket -R126-

44 - Terminal 31 (screen earth)

45 - NF (+) (low frequency) from telephone bracket -R126-

46 - NF (–) (low frequency) from telephone bracket -R126-

47 - SNDREQ signal from telephone bracket -R126-

49 - Ser-Tx (+) to telephone bracket -R126-

50 - Ser-Tx (–) to telephone bracket -R126-

51 - Ser-Rx (+) from telephone bracket -R126-

52 - Ser-Rx (–) from telephone bracket -R126-

C - MOST bus

1 - Input

2 - Output

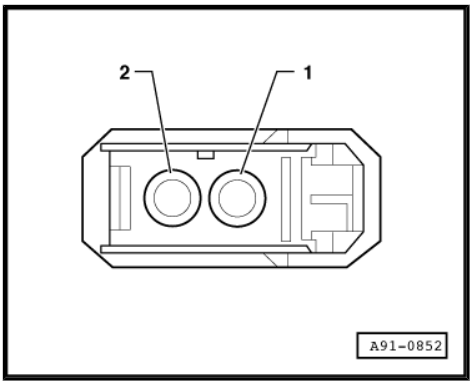

7.9 Connectors for mobile phone pre-installation (from week 22/09 onwards)

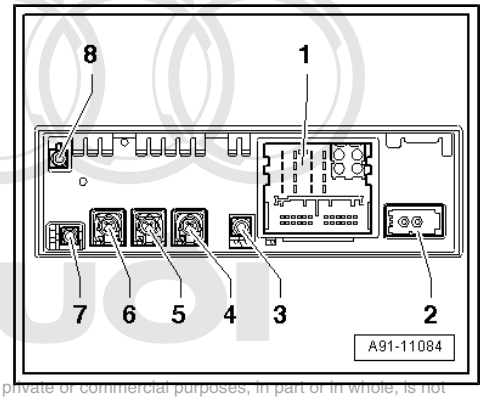

Control unit 1 for information electronics -J794-

1 - Connection block with four multi-pin connectors

2 - MOST bus

3 - Not used

4 - Multi-pin connector, 4-pin, grey (T4bc) to display unit for front information display and operating unit control unit -J685-

5 - Multi-pin connector, 4-pin (T4bd) to connection for external audio sources -R199-

6 - Not used

7 - GPS connection from roof aerial -R216-

8 - GSM connection from roof aerial -R216-

Protected by copyright. Copying for private or commercial purposes, in part or in whole, is not permitted unless authorised by AUDI AG. AUDI AG does not guarantee or accept any liability with respect to the correctness of information in this document. Copyright by AUDI AG.

Note

Contacts which are not listed are not used.

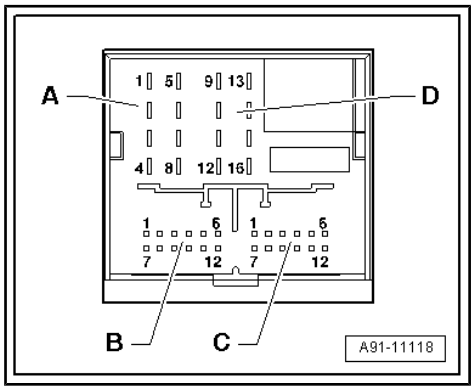

A - Multi-pin connector, 8-pin, brown (T8z)

2 - Voltage supply to multimedia system operating unit -E380-

3 - Wake-up to multimedia system operating unit -E380-

5 - Mobile phone “ON” signal to aerial amplifier for mobile telephone -R86-

6 - Res MU to multimedia system operating unit -E380-

7 - Open circuit diagnostic lead

B - Multi-pin connector, 12-pin, blue (T12y)

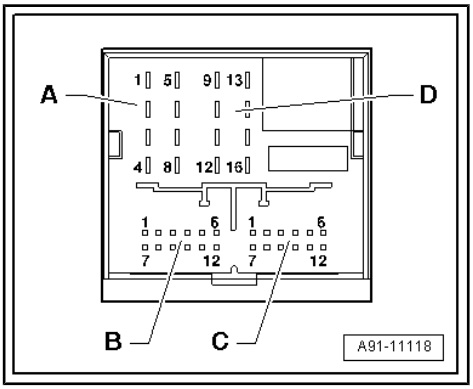

Left-hand drive vehicle

2 - Microphone input (+) from microphone unit in front roof module -R164- (front right microphone -R141-)

3 - Microphone input (–) from microphone unit in front roof module -R164- (front right microphone -R141-)

8 - Microphone input (+) from microphone unit in front roof module -R164- (front left microphone -R140-)

9 - Microphone input (–) from microphone unit in front roof module -R164- (front left microphone -R140-)

11 - FBAS wire (+) from reversing camera system control unit -J772-

Right-hand drive vehicle

2 - Microphone input (+) from microphone unit in front roof module -R164- (front left microphone -R140-)

3 - Microphone input (–) from microphone unit in front roof module -R164- (front left microphone -R140-)

8 - Microphone input (+) from microphone unit in front roof module -R164- (front right microphone -R141-)

9 - Microphone input (–) from microphone unit in front roof module -R164- (front right microphone -R141-)

11 - FBAS wire (+) from reversing camera system control unit -J772-

Protected by copyright. Copying for private or commercial purposes, in part or in whole, is not permitted unless authorised by AUDI AG. AUDI AG does not guarantee or accept any liability with respect to the correctness of information in this document. Copyright by AUDI AG.

D - Multi-pin connector, 8-pin, black (T8)

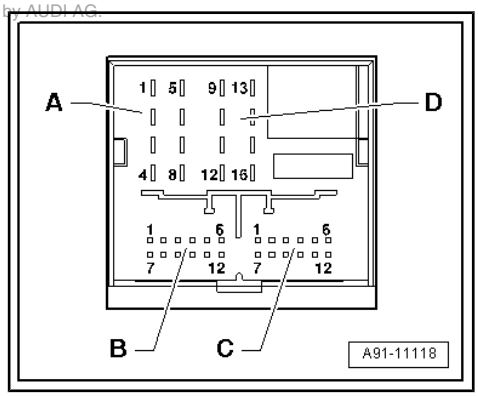

10 - Data from multimedia system operating unit -E380-

11 - Data to multimedia system operating unit -E380-

12 - Terminal 31

13 - SNDREQ signal from telephone bracket -R126- (mobile telephone)

14 - Res BT from multimedia system operating unit -E380-

15 - Terminal 30

16 - Earth to multimedia system operating unit -E380-

2 - MOST bus

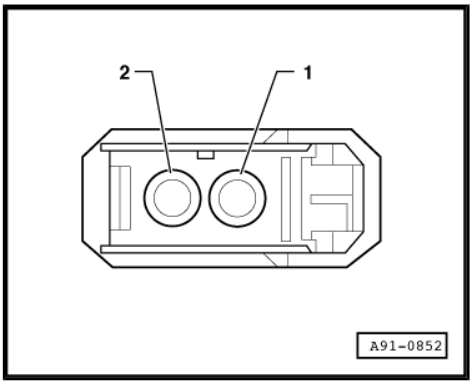

1 - Input

2 - Output

7.10 Connectors for Bluetooth hands-free system

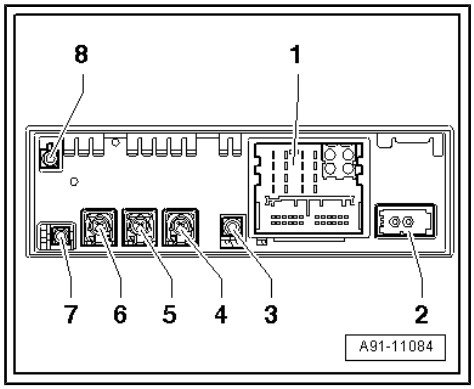

Control unit 1 for information electronics -J794-

1 - Connection block with four multi-pin connectors

2 - MOST bus

3 - Not used

4 - Multi-pin connector, 4-pin, grey (T4bc) to display unit for front information display and operating unit control unit -J685-

5 - Multi-pin connector, 4-pin (T4bd) to connection for external audio sources -R199-

6 - Not used

7 - Not used

8 - Not used

Note

Contacts which are not listed are not used.

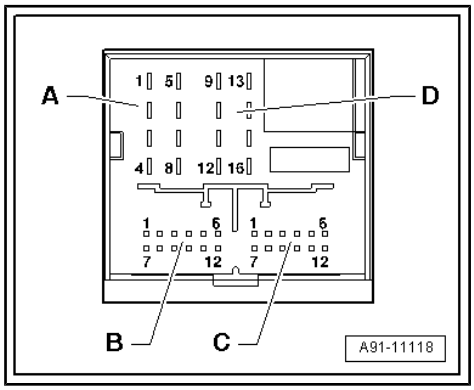

A - Multi-pin connector, 8-pin, brown (T8z)

2 - Voltage supply to multimedia system operating unit -E380-

3 - Wake-up to multimedia system operating unit -E380-

6 - Res MU to multimedia system operating unit -E380-

7 - Open circuit diagnostic lead

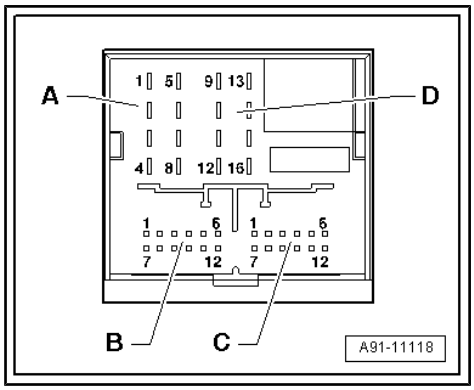

B - Multi-pin connector, 12-pin, blue (T12y)

8 - Microphone input (+) from microphone unit in front roof module -R164- (front left microphone -R140-), left-hand drive

- Microphone input (+) from microphone unit in front roof module -R164- (front right microphone -R141-), right-hand drive

9 - Microphone input (–) from microphone unit in front roof module -R164- (front left microphone -R140-), left-hand drive

- Microphone input (–) from microphone unit in front roof module -R164- (front right microphone -R141-), right-hand drive

Audi
Data protection clause: Copying and passing on this document to third parties and any other use of this document is not permitted unless authorised by AUDI AG. AUDI AG does not undertake any liability with respect to the correctness of information in this document. Copyright by AUDI AG.

D - Multi-pin connector, 8-pin, black (T8)

10 - Data from multimedia system operating unit -E380-

11 - Data to multimedia system operating unit -E380-

12 - Terminal 31

14 - Res BT from multimedia system operating unit -E380-

15 - Terminal 30

16 - Earth to multimedia system operating unit -E380-

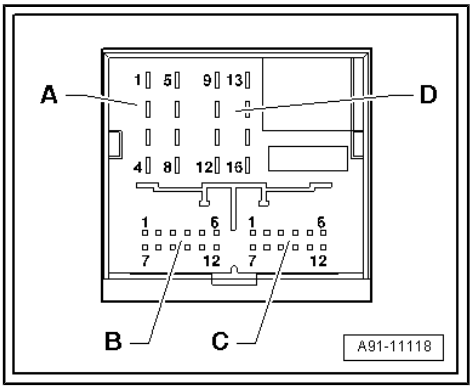

2 - MOST bus

1 - Input

2 - Output

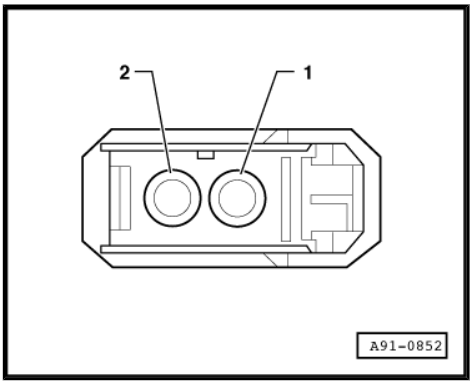

Protected by copyright. Copying for private or commercial purposes, in part or in whole, is not permitted unless authorised by AUDI AG. AUDI AG does not guarantee or accept any liability with respect to the correctness of information in this document. Copyright by AUDI AG.

7.11 Overview of fitting locations (up to week 21/09)

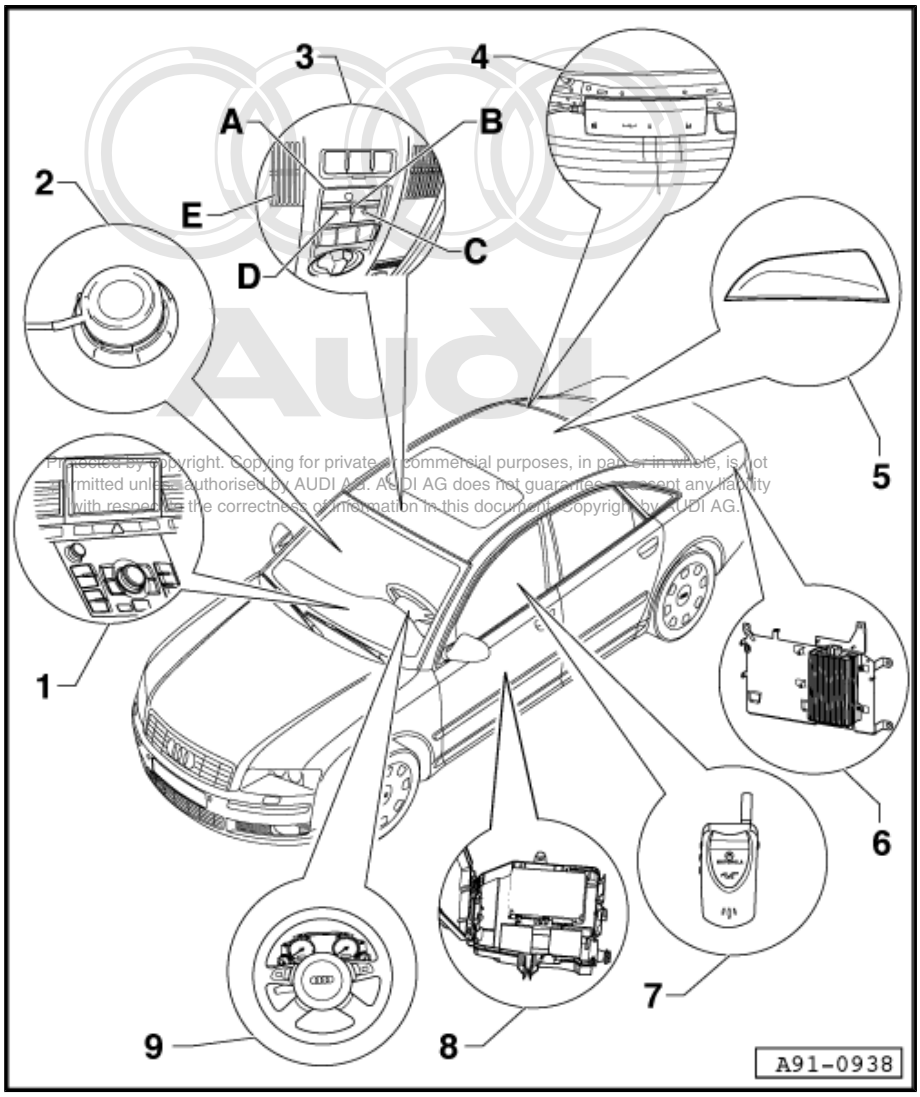

1 - Display unit for front information display and operating unit control unit -J685-

- ❑ In dash panel (centre)

- Multimedia system operating unit -E380-

- ❑ In centre console (bottom)

2 - Additional loudspeaker for telematics -R91-

- ❑ In B-pillar trim (right-side)
- ❑ Removing and installing ⇒ page 266

3 - Front interior light -W1-

- ❑ Telematics operating unit -E264-

- ♦ A: Breakdown help button -E275-
- ♦ B: Telematics warning lamp -K186-
- ♦ C: Emergency call button -E276-
- ♦ D: End of conversation button, Telematics (USA) -E331-
- ♦ E: Microphone unit in front roof module -R164-
  - ❑ Removing and installing telematics operating unit -E264- ⇒ page 267
  - ❑ Overview of microphone unit in front roof module -R164- ⇒ page 146
  - ❑ Removing and installing microphone unit in front roof module -R164- ⇒ page 168

4 - Telephone aerial -R65-

- ❑ GSM
- ❑ Behind roof end trim (right-side)
- ❑ Overview ⇒ page 85

5 - Radio, telephone and navigation system aerial -R52-

- ❑ Ter/Sat/GPS/additional GSM
- ❑ Roof aerial
- ❑ Overview ⇒ page 85

6 - Digital sound package control unit -J525-

- ❑ Behind luggage compartment side trim (left-side)

7 - Mobile telephone -R54-

- ❑ In centre console (bottom)
- ❑ Removing and installing telephone bracket -R126- ⇒ page 161
- ❑ In centre armrest
- ❑ Removing and installing telephone bracket -R126- in front centre armrest ⇒ page 162

Protected by copyright. Copying for private or commercial purposes, in part or in whole, is not permitted unless authorised by AUDI AG. AUDI AG does not guarantee or accept any liability with respect to the correctness of information in this document. Copyright by AUDI AG.

- ❑ Removing and installing telephone bracket -R126- in rear centre armrest ⇒ page 163

8 - Telephone/telematics control unit -J526-

- ❑ In front of front left seat beneath floor covering
- ❑ Pin assignment ⇒ page 173
- ❑ Removing and installing ⇒ page 182

- Mobile telephone operating electronics control unit -J412-

- ❑ Pin assignment (up to week 21/09) ⇒ page 175
- ❑ Removing and installing ⇒ page 182

9 - Multi-function steering wheel

- ❑ Removing and installing buttons ⇒ page 255

7.12 Overview of fitting locations (from week 22/09 onwards)

1 - Control unit 1 for information electronics -J794-

- ❑ Pin assignment of mobile phone pre-installation (from week 22/09 onwards) ⇒ page 176
- ❑ Pin assignment for Bluetooth hands-free system ⇒ page 178
- ❑ Removing and installing ⇒ page 21

2 - Microphone unit in front roof module -R164-

- ❑ Overview (from week 36/08 onwards) ⇒ page 148
- ❑ Removing and installing ⇒ page 168

3 - Telephone aerial -R65-

- ❑ Behind roof end trim (right-side)
- ❑ Overview ⇒ page 85

4 - Radio, telephone and navigation system aerial -R52-

- ❑ Roof aerial
- ❑ Overview ⇒ page 85

5 - Multi-function steering wheel

- ❑ Removing and installing buttons ⇒ page 255

6 - Display unit for front information display and operating unit control unit -J685-

- ❑ In dash panel (centre)

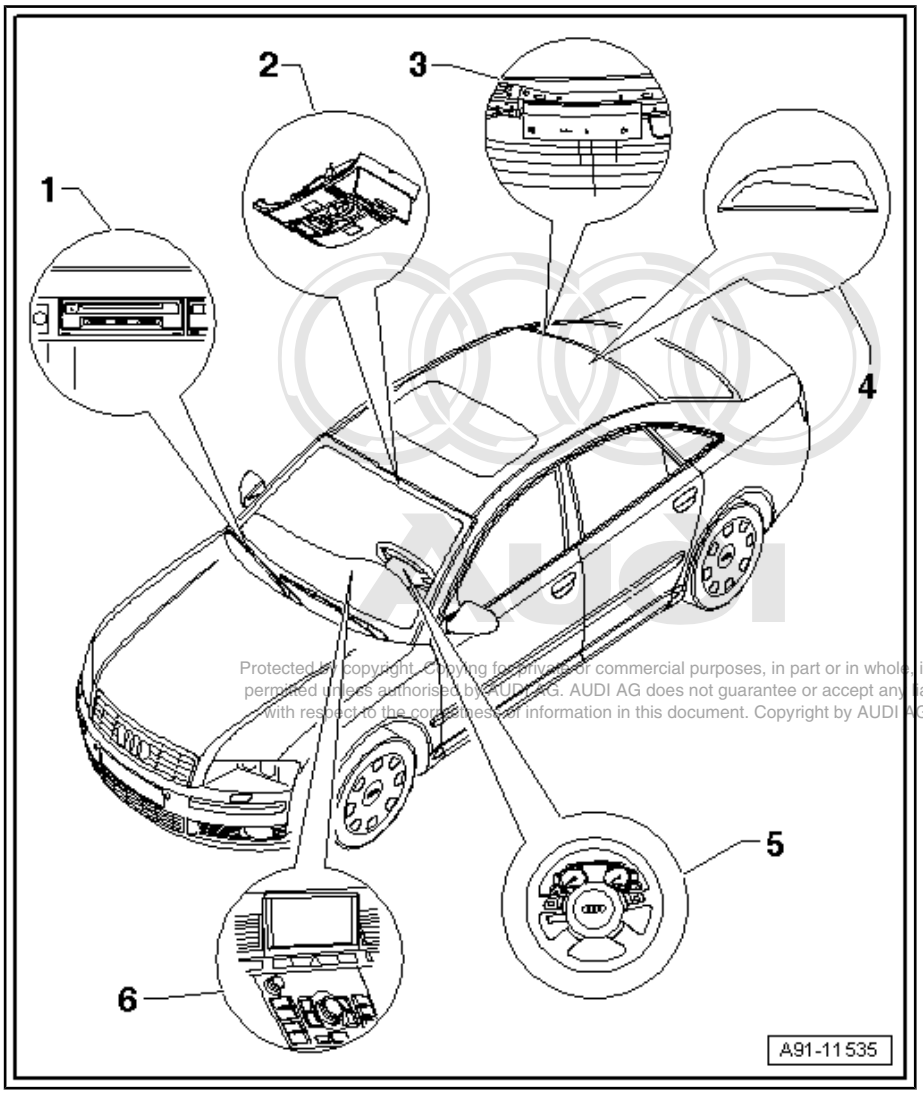

Protected by copyright. Copying for private or commercial purposes, in part or in whole, is not permitted unless authorised by AUDI AG. AUDI AG does not guarantee or accept any liability with respect to the correctness of information in this document. Copyright by AUDI AG.

- Multimedia system operating unit -E380-

- ❑ In centre console (bottom)

7.13 Removing and installing telephone and telematics control unit -J526-

– When renewing control unit, select “Replacement” function for appropriate control unit in “Guided Fault Finding”.

To do so, use the vehicle diagnostic, testing and information system -VAS 5051- .

– Switch off all electrical equipment.

– Remove ignition key.

Removing

– Remove front seat (left-side) ⇒ General body repairs, interior; Rep. Gr. 72 .

– Fold back floor covering ⇒ General body repairs, interior; Rep. Gr. 70 .

– Release electronics box cover and open box -arrows-.

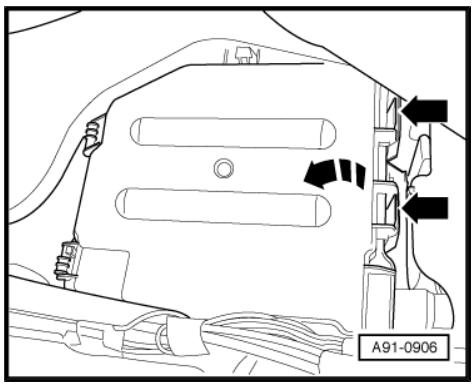

The telephone and telematics control unit -J526- and the emergency battery, telematics -A16- are only a push-fit in the electronics box.

– Pry the telephone and telematics control unit -J526- -1- out of electronics box -2- in direction of arrow.

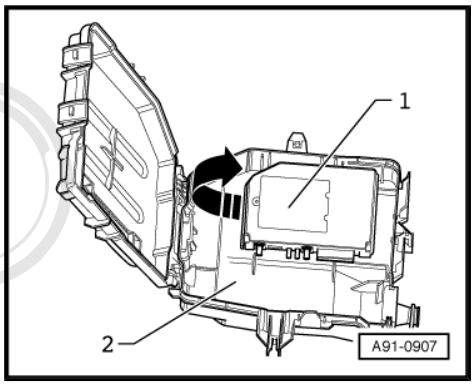

– Unplug all connectors at telephone and telematics control unit -J526- .

– Remove emergency battery, telematics -A16- .

Installing

– Installation is performed in reverse sequence.

7.14 Removing and installing mobile telephone operating electronics control unit -J412-

Protected by copyright. Copying for private or commercial purposes, in part or in whole, is not permitted unless authorised by AUDI AG. AUDI AG does not guarantee or accept any liability with respect to the correctness of information in this document. Copyright by AUDI AG.

Special tools and workshop equipment required

♦ Repair set for fibre optic cables -VAS 6223-

♦ Protective cap for cable connector -VAS 6223/9-

– When renewing control unit, select “Replacement” function for appropriate control unit in “Guided Fault Finding”.

To do so, use the vehicle diagnostic, testing and information system -VAS 5051- .

– Switch off all electrical equipment.

– Remove ignition key.

Removing

– Remove front seat (left-side) ⇒ General body repairs, interior; Rep. Gr. 72 .

– Fold back floor covering ⇒ General body repairs, interior; Rep. Gr. 70 .

– Release electronics box cover and open box -arrows-.

Protected by copyright. Copying for private or commercial purposes, in part or in whole, is not permitted unless authorised by AUDI AG. AUDI AG does not guarantee or accept any liability with respect to the correctness of information in this document. Copyright by AUDI AG.

The mobile telephone operating electronics control unit -J412- is only wedged in the electronics box.

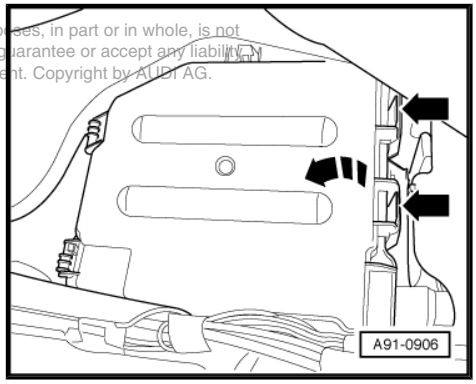

– Pry mobile telephone operating electronics control unit -J412- -1- out of electronics box -2- in direction of arrow.

– If fitted, unplug aerial for Bluetooth -R152- at mobile telephone operating electronics control unit -J412- -1-.

– Unplug all connectors at mobile telephone operating electronics control unit -J412- -1-.

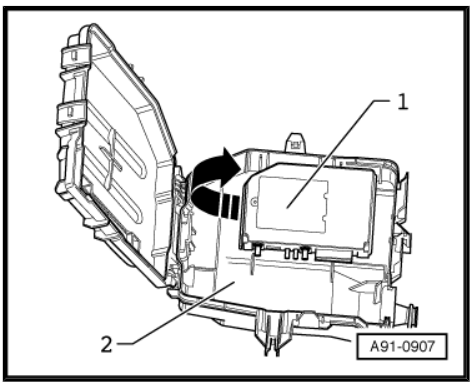

– Fit protective cap for cable connector -VAS 6223/9- -1- onto MOST bus connector -2-.

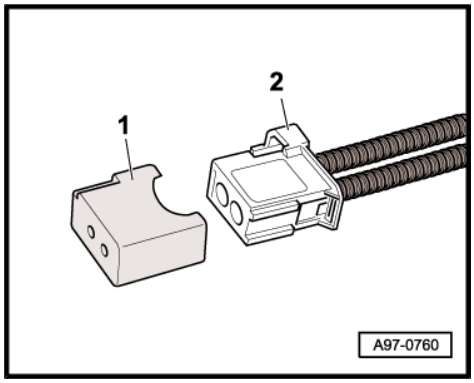

Installing

– Installation is performed in reverse sequence.

Protected by copyright. Copying for private or commercial purposes, in part or in whole, is not permitted unless authorised by AUDI AG. AUDI AG does not guarantee or accept any liability with respect to the correctness of information in this document. Copyright by AUDI AG.

8 Telephone system (Japan)

8.1 General notes (up to week 21/09)

The telephone system consists of the mobile phone pre-installation components.

The telephone transmitter and receiver unit -R36- is linked to the communications system via the navigation system with CD drive control unit -J401- .

The holder for the mobile telephone -R54- is located in the centre console. The system is operated using the multimedia system operating unit -E380- or the mobile telephone -R54- .

Microphones for the microphone unit in front roof module -R164- are integrated in the front interior light -W1- . One microphone (telephone microphone -R38-) is connected directly to the telephone transmitter and receiver unit -R36- .

Fault finding is performed via the “Guided Fault Finding” ⇒ Vehicle diagnosis, testing and information system VAS 5051.

Repairing aerial wiring ⇒ Electrical system; Rep. Gr. 97 .

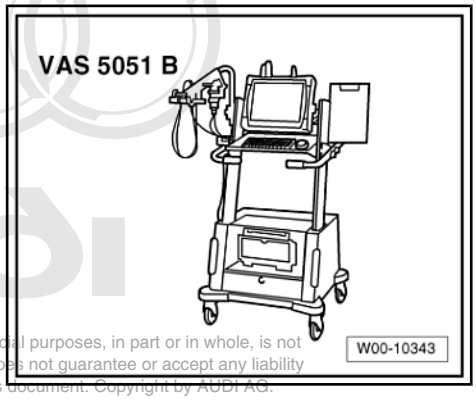

Protected by copyright. Copying for private or commercial purposes, in part or in whole, is not permitted unless authorised by AUDI AG. AUDI AG does not guarantee or accept any liability with respect to the correctness of information in this document. Copyright by AUDI AG.

8.2 General notes (from week 22/09 onwards)

The telephone system consists of the Bluetooth hands-free system.

- Bluetooth hands-free system in control unit 1 for information electronics -J794-

The control unit 1 for information electronics -J794- with microphone unit in front roof module -R164- is fitted and used as a hands-free system only. It is connected to the mobile telephone -R54- via Bluetooth.

The aerial for Bluetooth -R152- is fitted in the control unit 1 for information electronics -J794- .

Fault finding is performed via the “Guided Fault Finding” ⇒ Vehicle diagnosis, testing and information system VAS 5051.

Repairing aerial wiring ⇒ Electrical system; Rep. Gr. 97 .

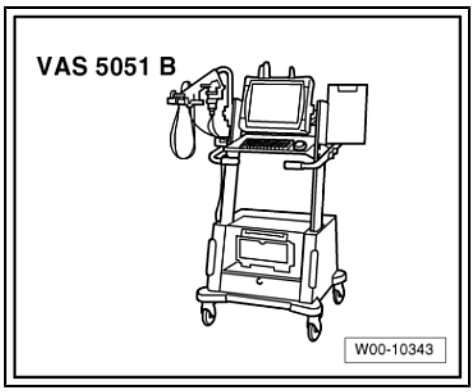

8.3 Mobile phone pre-installation (up to model year 2007) - layout

1 - Display unit for front information display and operating unit control unit -J685- in dash panel (centre)

2 - Control unit for front display and information control panel -J523- behind glove box

3 - Multimedia system operating unit -E380- in centre console (bottom)

4 - Display and operating unit changeover unit -J728- in front of front seat (left-side) beneath floor covering

5 - Navigation system with CD drive control unit -J401- behind luggage compartment side trim (left-side)

6 - Telephone transmitter and receiver unit -R36- beneath centre console storage compartment

7 - Connector in centre console storage compartment

8 - Microphone unit in front roof module -R164- (telephone microphone -R38-) in front interior light -W1-

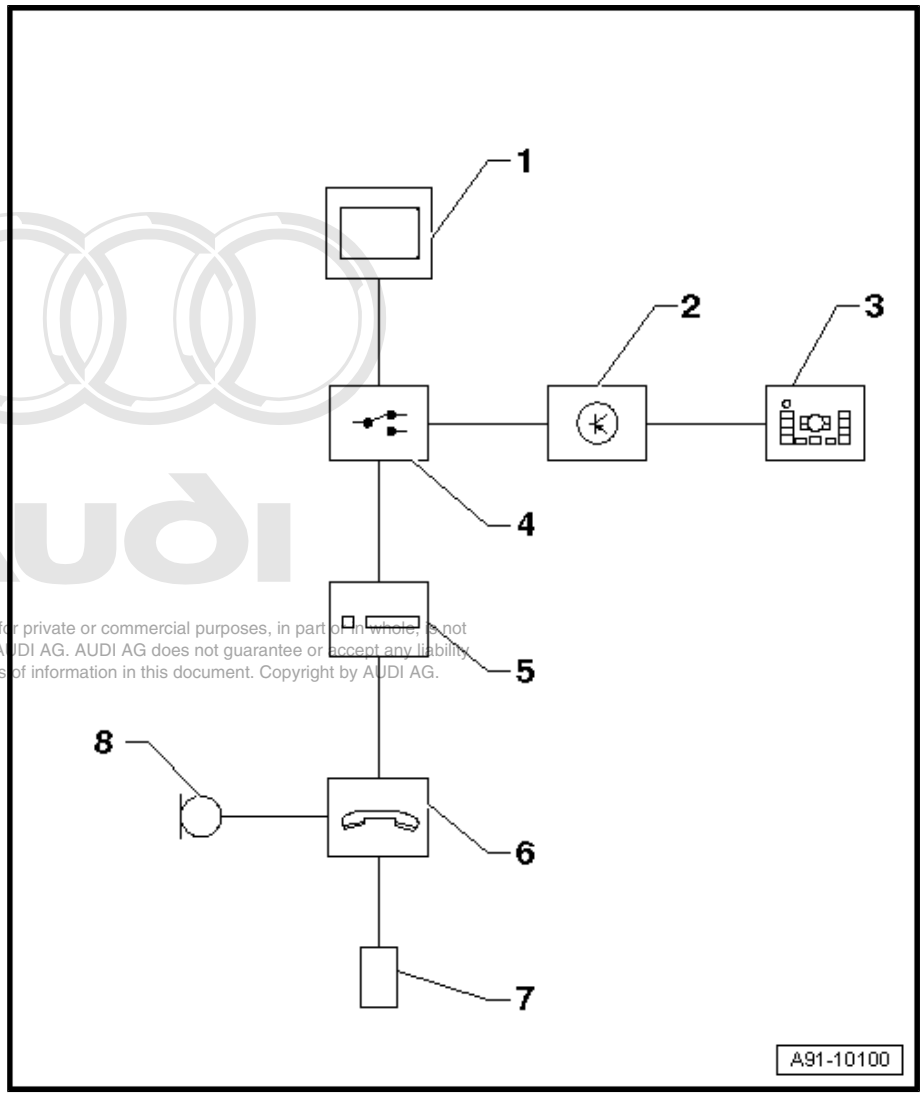

Protected by copyright. Copying for private or commercial purposes, in part or in whole, is not permitted unless authorised by AUDI AG. AUDI AG does not guarantee or accept any liability with respect to the correctness of information in this document. Copyright by AUDI AG.

8.4 Mobile phone pre-installation (from model year 2008 onwards, up to week 21/09) - layout

1 - Display unit for front information display and operating unit control unit -J685- in dash panel (centre)

2 - Control unit for front display and information control panel -J523- behind glove box

3 - Multimedia system operating unit -E380- in centre console (bottom)

4 - Navigation system with CD drive control unit -J401- behind luggage compartment side trim (left-side)

5 - Telephone transmitter and receiver unit -R36- beneath centre console storage compartment

6 - Connector in centre console storage compartment

7 - Microphone unit in front roof module -R164- (telephone microphone -R38-) in front interior light -W1-

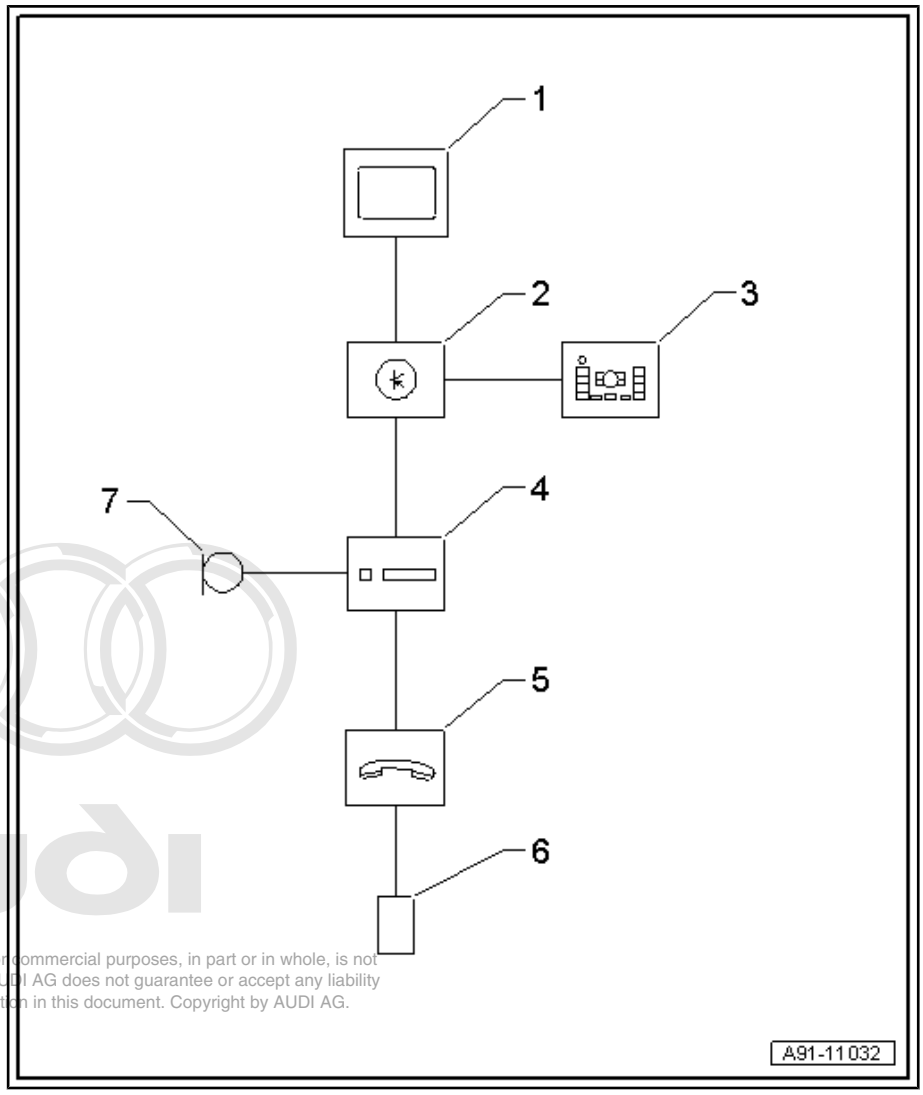

Protected by copyright. Copying for private or commercial purposes, in part or in whole, is not permitted unless authorised by AUDI AG. AUDI AG does not guarantee or accept any liability with respect to the correctness of information in this document. Copyright by AUDI AG.

8.5 Bluetooth hands-free system (from week 22/09 onwards) - layout

1 - Display unit for front information display and operating unit control unit -J685- in dash panel (centre)

2 - Multimedia system operating unit -E380- in centre console (bottom)

3 - Microphone unit in front roof module -R164- (front right microphone -R141-) in front interior light -W1-

4 - Control unit 1 for information electronics -J794- with aerial for Bluetooth -R152- in glove box (left-side)

5 - Data bus diagnostic interface -J533- behind glove box

6 - Digital sound package control unit -J525- behind luggage compartment side trim (left-side)

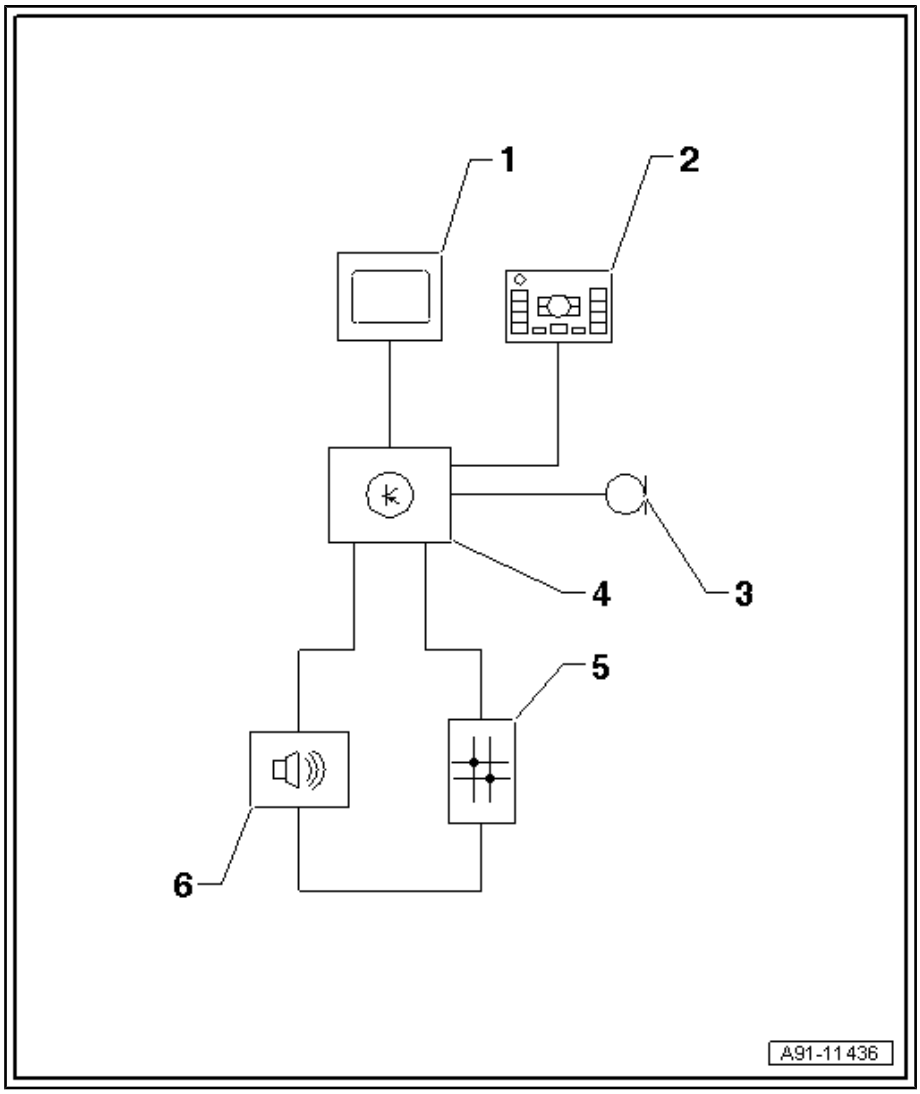

Protected by copyright. Copying for private or commercial purposes, in part or in whole, is not permitted unless authorised by AUDI AG. AUDI AG does not guarantee or accept any liability with respect to the correctness of information in this document. Copyright by AUDI AG.

8.6 Connectors (up to week 21/09)

Telephone transmitter and receiver unit -R36-

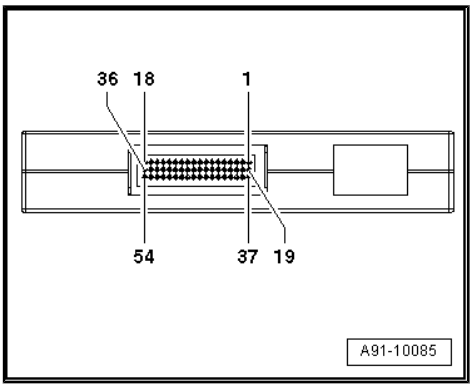

Note

Contacts which are not listed are not used.

Multi-pin connector, 54-pin, black

1 - Terminal 30

2 - Terminal 31

4 - Switch-on signal to navigation system with CD drive control unit -J401-

6 - Data to navigation system with CD drive control unit -J401-

7 - Data from navigation system with CD drive control unit -J401-

8 - NF (+) (low frequency) to digital sound package control unit -J525-

9 - NF (–) (low frequency) to digital sound package control unit -J525-

10 - Terminal 31 (screen earth) to navigation system with CD drive control unit -J401-

11 - Microphone input (+) from microphone unit in front roof module -R164- (up to model year 2007)

12 - Microphone input (–) from microphone unit in front roof module -R164- (up to model year 2007)

16 - NF mute (low frequency) to control unit for front display and information control panel -J523-

Protected by copyright. Copying for private or commercial purposes, in part or in whole, is not permitted unless authorised by AUDI AG. AUDI AG does not guarantee or accept any liability with respect to the correctness of information in this document. Copyright by AUDI AG.

37 - Connector cable (CU)

38 - Connector cable (TxAF)

39 - Connector cable (AG)

42 - Connector cable (TTxD)

43 - Connector cable (TRxD)

45 - Connector cable (CU)

46 - Connector cable (RxAF)

48 - Connector cable (PCon1)

49 - Connector cable (PCon2)

50 - Connector cable (AdPDt)

51 - Connector cable (AdPCt)

8.7 Connectors for Bluetooth hands-free system (from week 22/09 onwards)

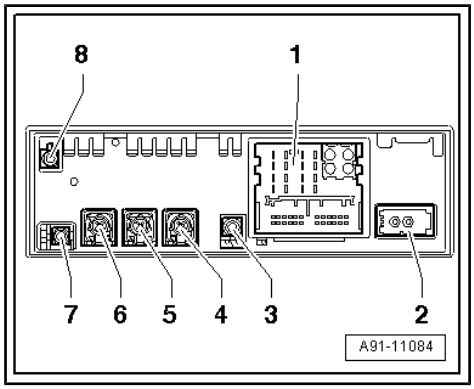

Control unit 1 for information electronics -J794-

1 - Connection block with four multi-pin connectors

2 - MOST bus

3 - Not used

4 - Multi-pin connector, 4-pin, grey (T4bc) to display unit for front information display and operating unit control unit -J685-

5 - Multi-pin connector, 4-pin (T4bd) to connection for external audio sources -R199-

6 - Not used

7 - Not used

8 - Not used

Note

Contacts which are not listed are not used.

A - Multi-pin connector, 8-pin, brown (T8z)

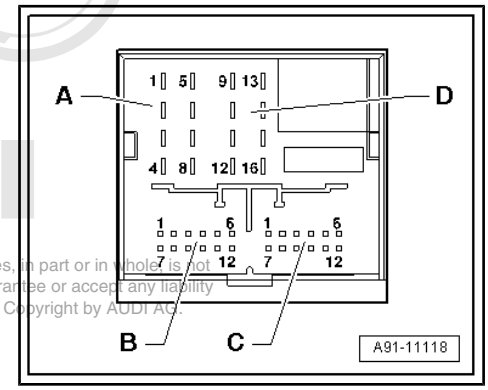

2 - Voltage supply to multimedia system operating unit -E380-

3 - Wake-up to multimedia system operating unit -E380-

6 - Res MU to multimedia system operating unit -E380-

7 - Open circuit diagnostic lead

Protected by copyright. Copying for private or commercial purposes, in part or in whole, is not permitted unless authorised by AUDI AG. AUDI AG does not guarantee or accept any liability with respect to the correctness of information in this document. Copyright by AUDI AG.

B - Multi-pin connector, 12-pin, blue (T12y)

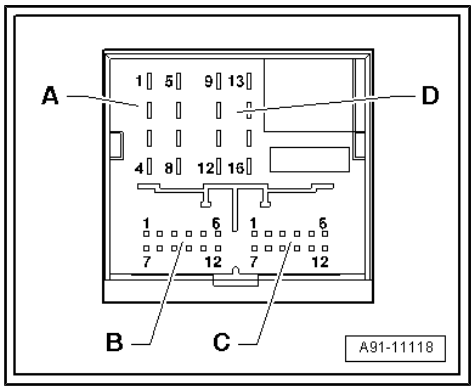

8 - Microphone input (+) from microphone unit in front roof module -R164- (front left microphone -R140-), left-hand drive

- Microphone input (+) from microphone unit in front roof module -R164- (front right microphone -R141-), right-hand drive

9 - Microphone input (–) from microphone unit in front roof module -R164- (front left microphone -R140-), left-hand drive

- Microphone input (–) from microphone unit in front roof module -R164- (front right microphone -R141-), right-hand drive

D - Multi-pin connector, 8-pin, black (T8)

10 - Data from multimedia system operating unit -E380-

11 - Data to multimedia system operating unit -E380-

12 - Terminal 31

14 - Res BT from multimedia system operating unit -E380-

15 - Terminal 30

16 - Earth to multimedia system operating unit -E380-

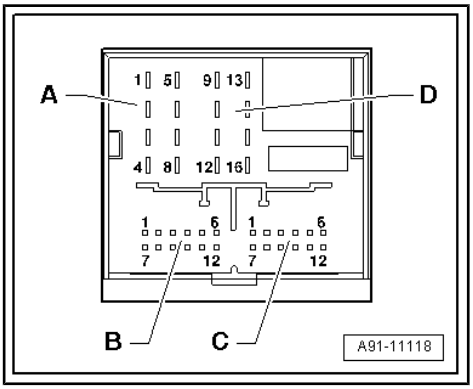

2 - MOST bus

1 - Input

2 - Output

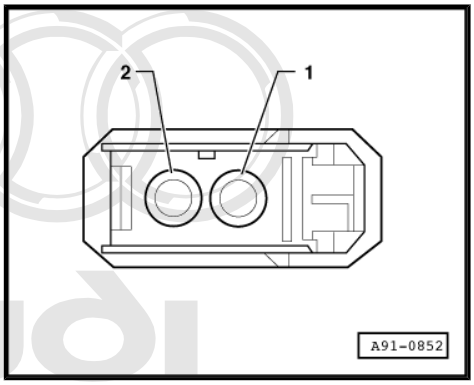

Protected by copyright. Copying for private or commercial purposes, in part or in whole, is not permitted unless authorised by AUDI AG. AUDI AG does not guarantee or accept any liability with respect to the correctness of information in this document. Copyright by AUDI AG.

8.8 Overview of fitting locations (up to week 21/09)

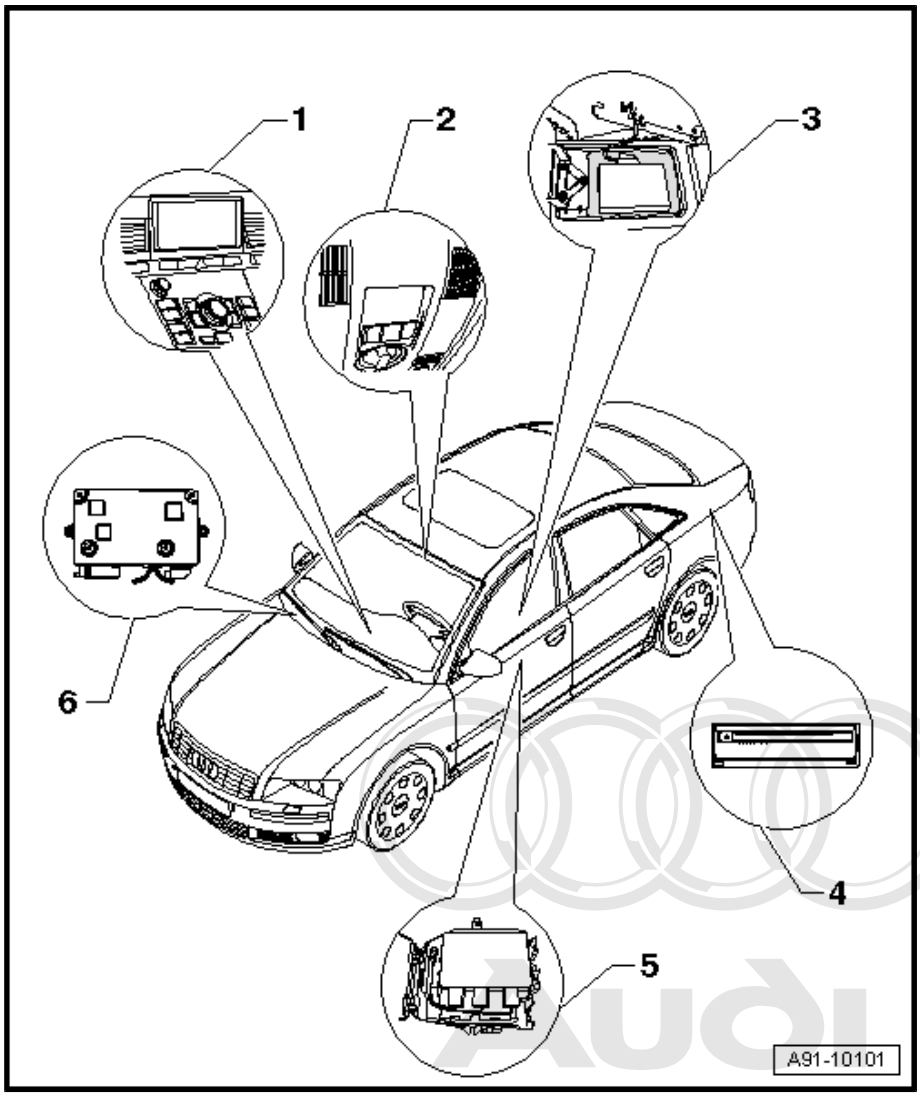

1 - Display unit for front information display and operating unit control unit -J685-

- ❑ In dash panel (centre)

Multimedia system operating unit -E380-

- ❑ In centre console (bottom)

2 - Microphone unit in front roof module -R164-

- ❑ Overview ⇒ page 146
- ❑ Removing and installing ⇒ page 168

3 - Telephone transmitter and receiver unit -R36-

- ❑ Beneath centre console storage compartment
- ❑ Pin assignment (up to week 21/09) ⇒ page 189
- ❑ Removing and installing ⇒ page 193

4 - Navigation system with CD drive control unit -J401-

- ❑ Behind luggage compartment side trim (left-side)
- ❑ Pin assignment (up to model year 2007) ⇒ page 208
- ❑ Pin assignment (from model year 2008 onwards, up to week 21/09) ⇒ page 209
- ❑ Removing and installing ⇒ page 201

5 - Display and operating unit changeover unit -J728-

- ❑ Up to model year 2007
- ❑ In front of front left seat beneath floor covering

6 - Control unit for front display and information control panel -J523-

- ❑ Behind glove box

Protected by copyright. Copying for private or commercial purposes, in part or in whole, is not permitted unless authorised by AUDI AG. AUDI AG does not guarantee or accept any liability with respect to the correctness of information in this document. Copyright by AUDI AG.

8.9 Overview of fitting locations (from week 22/09 onwards)

1 - Control unit 1 for information electronics -J794-

- ❑ Pin assignment for Bluetooth hands-free system ⇒ page 190
- ❑ Removing and installing ⇒ page 21

2 - Microphone unit in front roof module -R164-

- ❑ Overview (from week 36/08 onwards) ⇒ page 148
- ❑ Removing and installing ⇒ page 168

3 - Display unit for front information display and operating unit control unit -J685-

- ❑ In dash panel (centre)

Multimedia system operating unit -E380-

- ❑ In centre console (bottom)

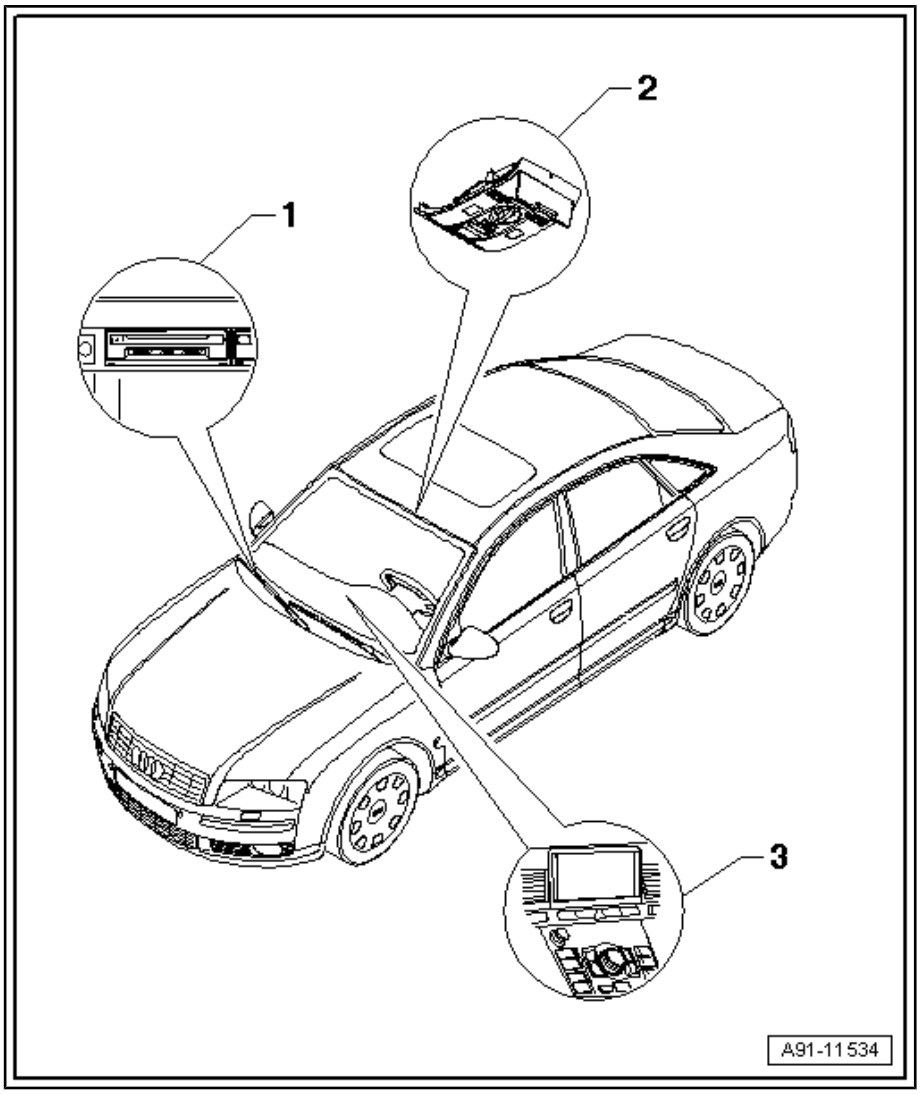

8.10 Removing and installing telephone transmitter and receiver unit -R36-

– Switch off all electrical equipment.

– Remove ignition key.

– When renewing control unit, select “Replacement” function for appropriate control unit in “Guided Fault Finding”.

Protected by copyright. Copying for private or commercial purposes, in part or in whole, is not permitted unless authorised by AUDI AG. AUDI AG does not guarantee or accept any liability with respect to the correctness of information in this document. Copyright by AUDI AG.

To do so, use the vehicle diagnostic, testing and information system -VAS 5051- .

Removing

– Unclip storage compartment -1- in direction of arrow -A-.

– Slide storage compartment -1- in direction of arrow -B- out of centre console.

Connector cable -2- is secured on back of storage compartment with two bolts -3- and is part of wiring harness for connector at telephone transmitter and receiver unit -R36- .

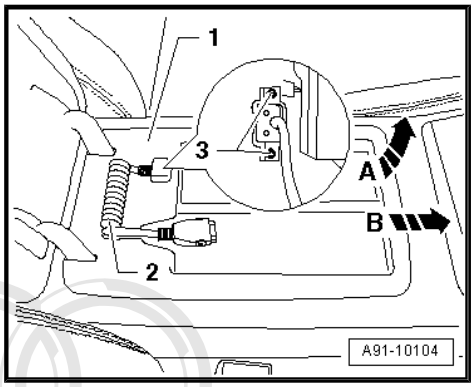

The telephone transmitter and receiver unit -R36- -1- is secured to the back of the storage compartment with a bracket -2-.

– Unplug connector -3- at telephone transmitter and receiver unit -R36- -1-.

– Unscrew bolts -arrows- (1 Nm) and remove telephone transmitter and receiver unit -R36- -1-.

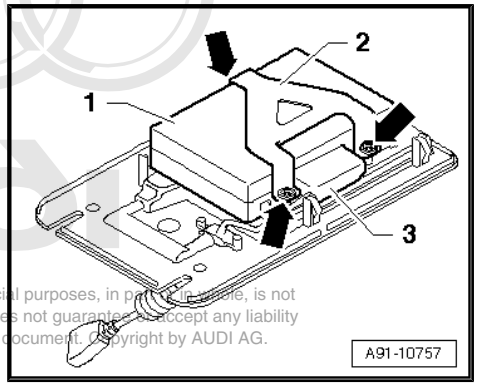

Installing

– Installation is performed in reverse sequence.

Protected by copyright. Copying for private or commercial purposes, in part or in whole, is not permitted unless authorised by AUDI AG. AUDI AG does not guarantee or accept any liability with respect to the correctness of information in this document. Copyright by AUDI AG.

9 Navigation system

9.1 General notes (up to week 35/08)

The navigation system is linked to the MMI Infotainment system via the MOST Bus.

A DVD is used as the navigation media. This allows navigation data for several countries as well as additional information (hotels, restaurants, etc.) to be stored.

The navigation system with CD drive control unit -J401- is located in the luggage compartment (left-side). The multimedia system operating unit -E380- is used for operation.

Fault finding is performed via the “Guided Fault Finding” using ⇒ Vehicle diagnosis, testing and information system VAS 5051.

Repairing aerial wiring ⇒ Electrical system; Rep. Gr. 97 .

Protected by copyright. Copying for private or commercial purposes, in part or in whole, is not permitted unless authorised by AUDI AG. AUDI AG does not guarantee or accept any liability with respect to the correctness of information in this document. Copyright by AUDI AG.

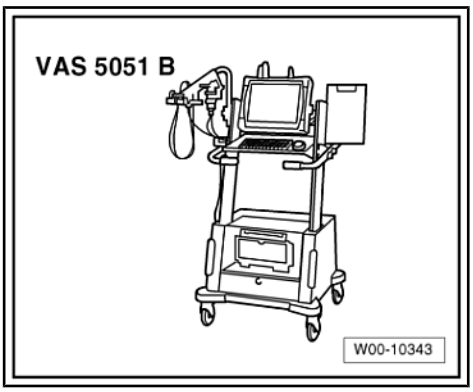

9.2 General notes (from week 36/08 onwards)

The navigation system is part of the control unit 1 for information electronics -J794- in the glove box.

The multimedia system operating unit -E380- is used for operation.

Navigation data are stored on an internal hard disk (HDD) on MMI system with maximum equipment.

Fault finding is performed via the “Guided Fault Finding” ⇒ Vehicle diagnosis, testing and information system VAS 5051.

Repairing aerial wiring ⇒ Electrical system; Rep. Gr. 97 .

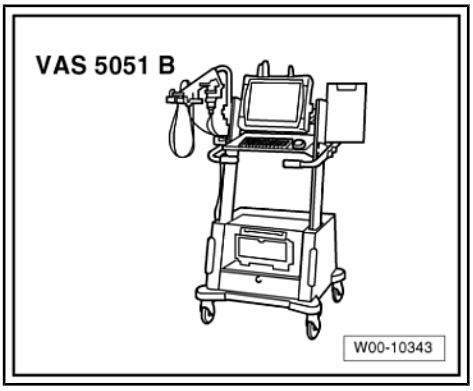

9.3 Navigation system (up to week 35/08) - layout

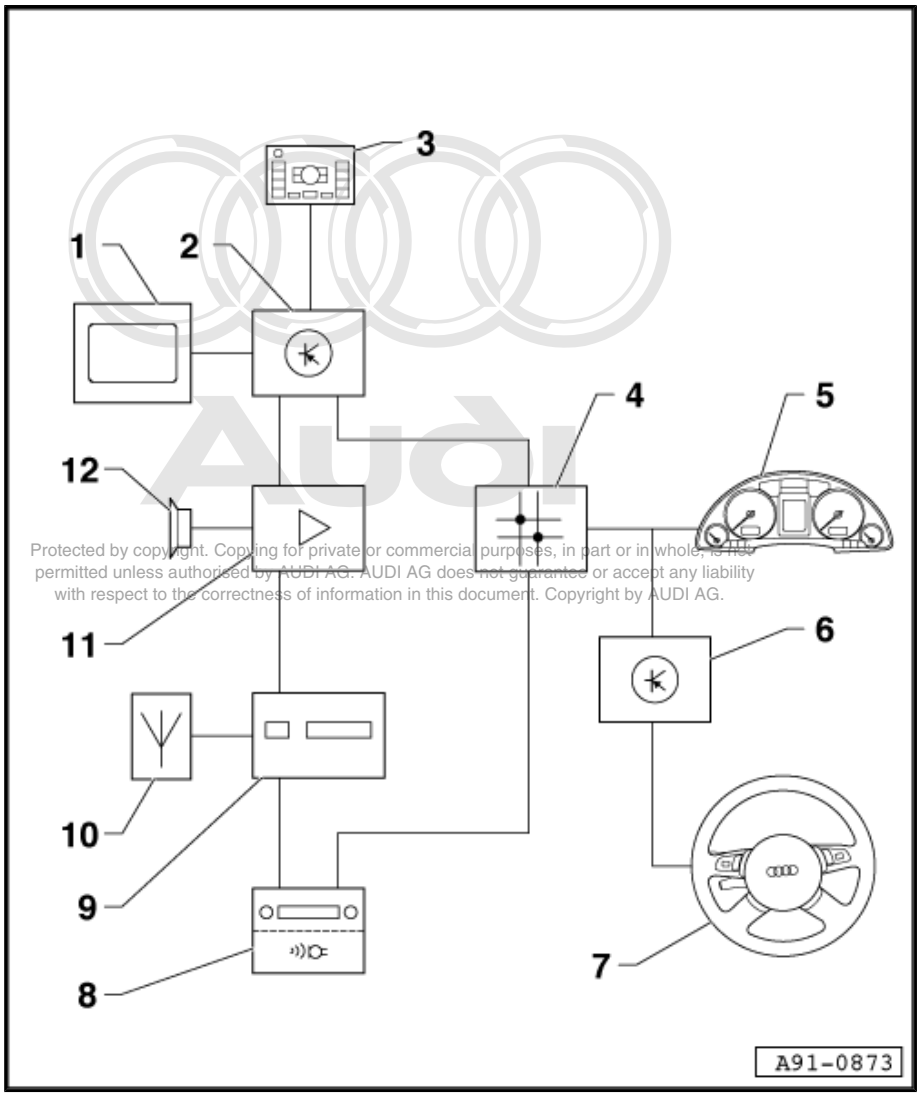

Protected by copyright. Copying for private or commercial purposes, in part or in whole, is not permitted unless authorised by AUDI AG. AUDI AG does not guarantee or accept any liability with respect to the correctness of information in this document. Copyright by AUDI AG.

1 - Display unit for front information display and operating unit control unit -J685- in dash panel (centre)

2 - Control unit for front display and information control panel -J523- behind glove box

3 - Multimedia system operating unit -E380- in centre console (bottom)

4 - Data bus diagnostic interface -J533- behind glove box

5 - Control unit in dash panel insert -J285- (instrument cluster) in dash panel

6 - Steering column electronics control unit -J527- on steering column on steering column switch

7 - Multi-function steering wheel

8 - Radio -R- with speech input control unit -J507- behind luggage compartment side trim (left-side)

9 - Navigation system with CD drive control unit -J401- behind luggage compartment side trim (left-side)

10 - Navigation system aerial -R50- behind roof end trim (centre); with telephone/SDARS: roof aerial

11 - Digital sound package control unit -J525- behind luggage compartment side trim (left-side)

12 - Sound systems

9.4 Navigation system (from week 36/08 onwards) - layout

1 - GPS aerial -R50- behind roof end trim (centre)/with telephone: roof aerial

2 - Display unit for front information display and operating unit control unit -J685- in dash panel (centre)

3 - Control unit 1 for information electronics -J794- in glove box (left-side)

4 - Multimedia system operating unit -E380- in centre console (bottom)

5 - Data bus diagnostic interface -J533- behind glove box

6 - Steering column electronics control unit -J527- on steering column on steering column switch

7 - Multi-function steering wheel

8 - Control unit in dash panel insert -J285- (instrument cluster) in dash panel

9 - Digital sound package control unit -J525- behind luggage compartment side trim (left-side)

10 - Radio -R- located behind luggage compartment side trim (left-side)

11 - Microphone unit in front roof module -R164- (front right microphone -R141-) in front interior light -W1-

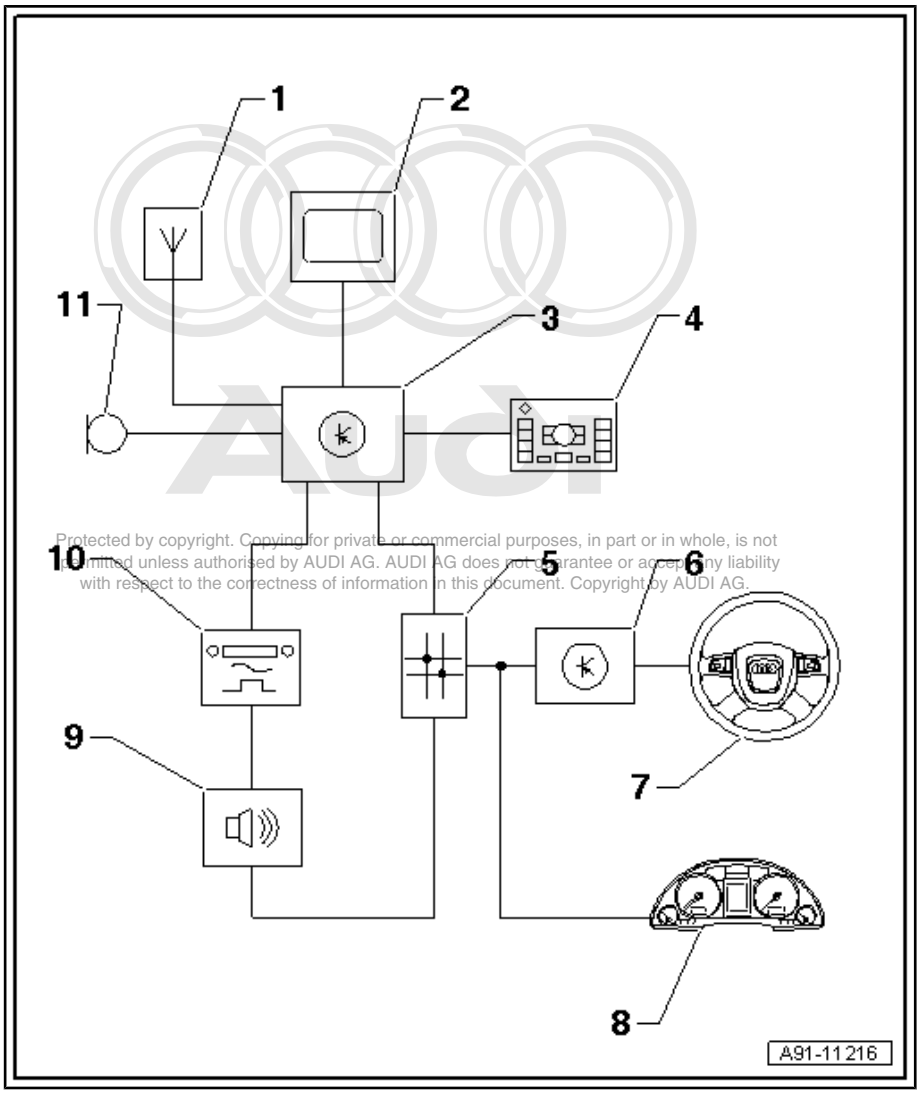

Protected by copyright. Copying for private or commercial purposes, in part or in whole, is not permitted unless authorised by AUDI AG. AUDI AG does not guarantee or accept any liability with respect to the correctness of information in this document. Copyright by AUDI AG.

9.5 Connectors for navigation system (up to week 35/08)

Navigation system with CD drive control unit -J401-

A - Multi-pin connector, 8-pin, black

B - MOST bus

C - GPS connection (blue) from GPS aerial -R50-

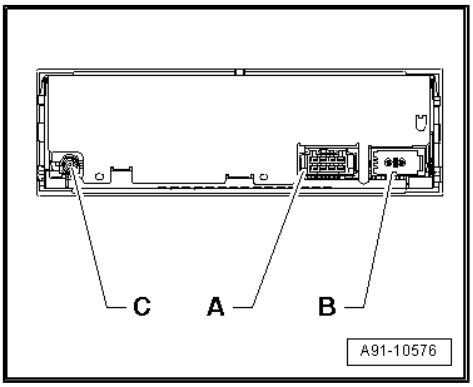

Note

Contacts which are not listed are not used.

A - Multi-pin connector, 8-pin, black

1 - Terminal 31

2 - Terminal 30

5 - Open circuit diagnostic lead

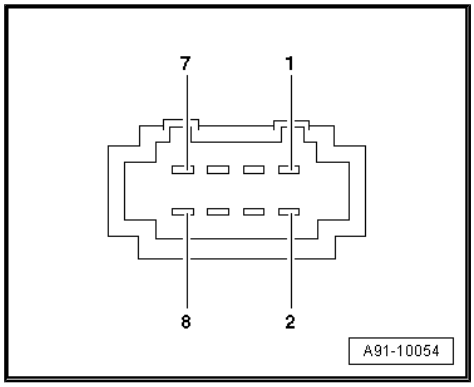

B - MOST bus

1 - Input

2 - Output

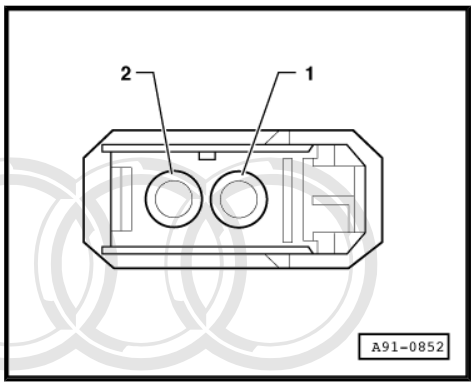

9.6 Connectors for navigation system (from week 36/08 onwards)

Control unit 1 for information electronics -J794-

1 - Connection block with four multi-pin connectors

2 - MOST bus

3 - FBAS input

4 - Multi-pin connector, 4-pin, grey (T4am) to display unit for front information display and operating unit control unit -J685-

5 - Multi-pin connector, 4-pin (T4ao) to connection for external audio sources -R199-

6 - Not used

7 - GPS connection from GPS aerial -R50- / roof aerial -R216-

8 - Not used

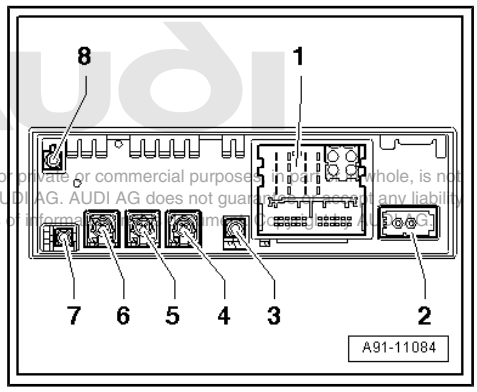

Protected by copyright. Copying for private or commercial purposes, in part or in whole, is not permitted unless authorised by AUDI AG. AUDI AG does not guarantee or accept any liability with respect to the correctness of information in this document. Copyright by AUDI AG.

Note

Contacts which are not listed are not used.

A - Multi-pin connector, 8-pin, brown (T8z)

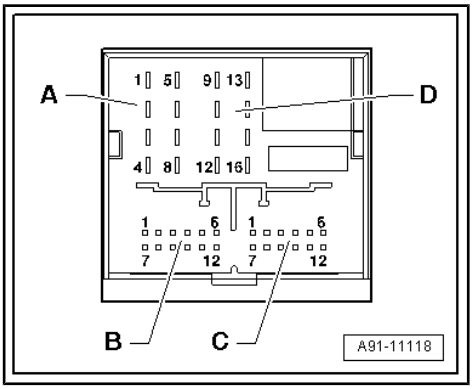

1 - NF mute (low frequency) from pre-fitted components for mobile phone installation

2 - Voltage supply to multimedia system operating unit -E380-

3 - Wake-up to multimedia system operating unit -E380-

6 - Res MU to multimedia system operating unit -E380-

7 - Open circuit diagnostic lead

B - Multi-pin connector, 12-pin, blue (T12y)

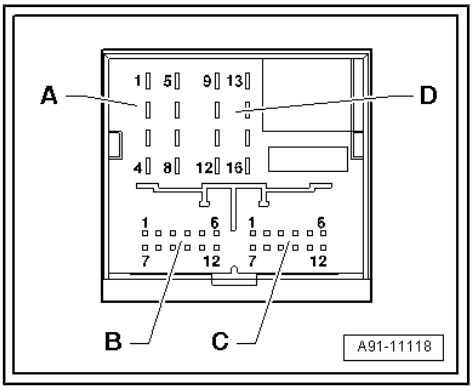

Left-hand drive vehicle

2 - Microphone input (+) from microphone unit in front roof module -R164- (front right microphone -R141-)

3 - Microphone input (–) from microphone unit in front roof module -R164- (front right microphone -R141-)

5 - FBAS wire (–) from reversing camera system control unit -J772-

8 - Microphone input (+) from microphone unit in front roof module -R164- (front left microphone -R140-)

9 - Microphone input (–) from microphone unit in front roof module -R164- (front left microphone -R140-)

11 - FBAS wire (+) from reversing camera system control unit -J772-

Right-hand drive vehicle

2 - Microphone input (+) from microphone unit in front roof module -R164- (front left microphone -R140-)

3 - Microphone input (–) from microphone unit in front roof module -R164- (front left microphone -R140-)

5 - FBAS wire (–) from reversing camera system control unit -J772-

8 - Microphone input (+) from microphone unit in front roof module -R164- (front right microphone -R141-)

9 - Microphone input (–) from microphone unit in front roof module -R164- (front right microphone -R141-)

11 - FBAS wire (+) from reversing camera system control unit -J772-

Protected by copyright. Copying for private or commercial purposes, in part or in whole, is not permitted unless authorised by AUDI AG. AUDI AG does not guarantee or accept any liability with respect to the correctness of information in this document. Copyright by AUDI AG.

D - Multi-pin connector, 8-pin, black (T8)

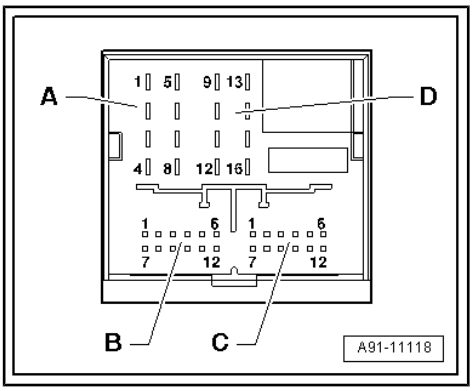

10 - Data from multimedia system operating unit -E380-

11 - Data to multimedia system operating unit -E380-

12 - Terminal 31

14 - Res BT from multimedia system operating unit -E380-

15 - Terminal 30

16 - Earth to multimedia system operating unit -E380-

2 - MOST bus

1 - Input

2 - Output

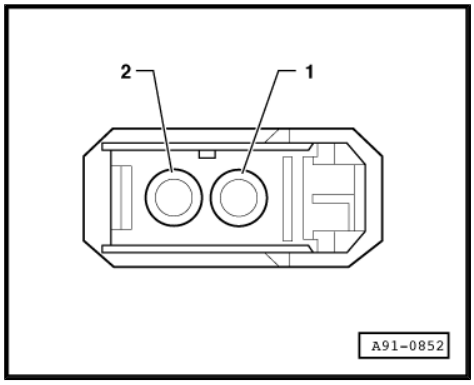

9.7 Overview of fitting locations (up to week 35/08)

1 - Control unit for front display and information control panel -J523-

- ❑ Behind glove box

2 - Display unit for front information display and operating unit control unit -J685-

- ❑ In dash panel (centre)

- Multimedia system operating unit -E380-

- ❑ In centre console (bottom)

3 - GPS aerial -R50-

- ❑ Behind roof end trim (centre)
- ❑ Overview ⇒ page 85

4 - Digital sound package control unit -J525-

- ❑ Behind luggage compartment side trim (left-side)

5 - Navigation system with CD drive control unit -J401-

- ❑ Behind luggage compartment side trim (left-side)
- ❑ Pin assignment (up to week 35/08) ⇒ page 197
- ❑ Removing and installing ⇒ page 201

6 - Multi-function steering wheel

- ❑ Removing and installing buttons ⇒ page 255

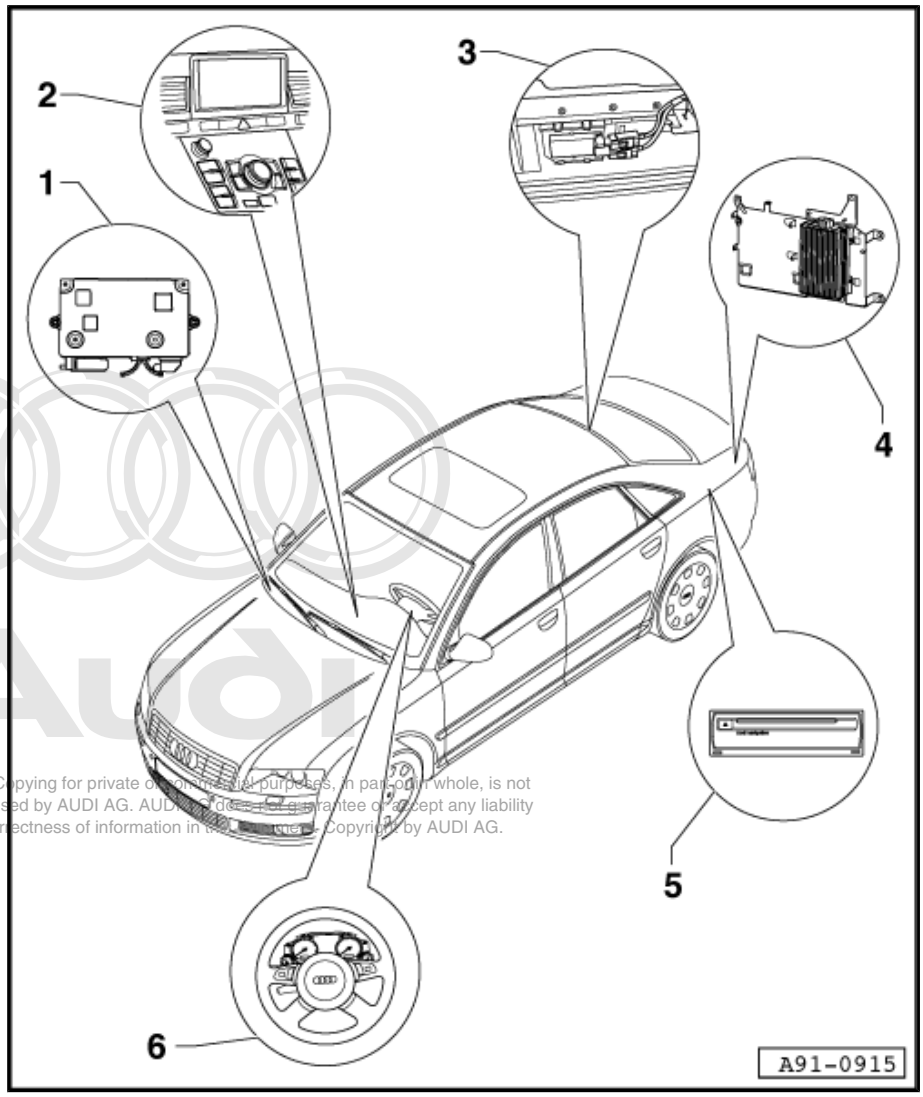

Protected by copyright. Copying for private or commercial purposes, in part or in whole, is not permitted unless authorised by AUDI AG. AUDI AG does not guarantee or accept any liability with respect to the correctness of information in this document. Copyright by AUDI AG.

9.8 Overview of fitting locations (from week 36/08 onwards)

1 - Control unit 1 for information electronics -J794-

- In glove box (left-side)
- Pin assignment (from week 36/08 onwards) ⇒ page 198
- Removing and installing (from week 36/08 onwards) ⇒ page 21

2 - Display unit for front information display and operating unit control unit -J685-

- In dash panel (centre)

- Multimedia system operating unit -E380-

- In centre console (bottom)

3 - GPS aerial -R50-

- Behind roof end trim (centre)
- Overview ⇒ page 85

4 - Multi-function steering wheel

- Removing and installing buttons ⇒ page 255

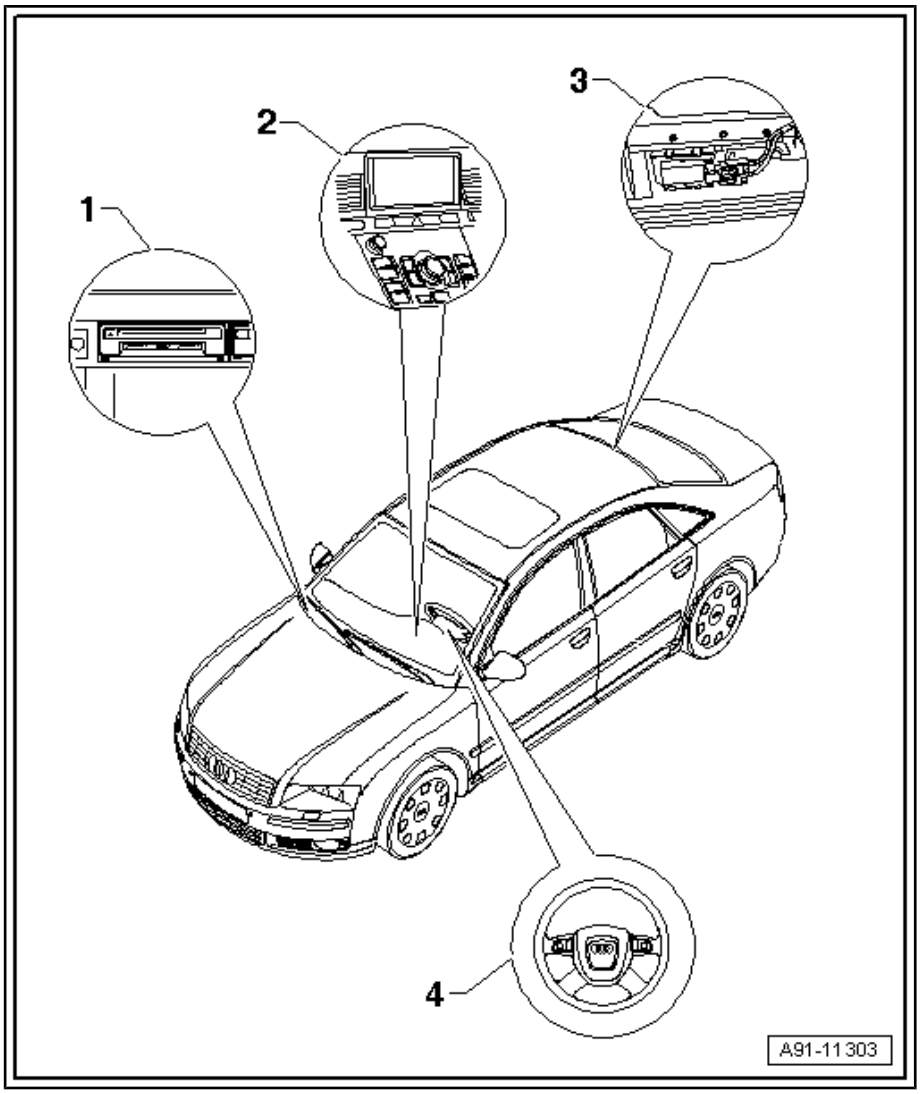

9.9 Removing and installing navigation system with CD drive control unit -J401-

Special tools and workshop equipment required

- Radio release tool -T10057-

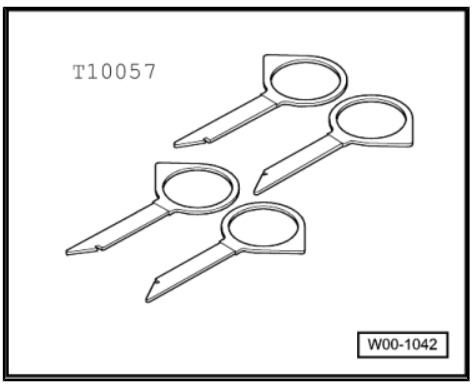

Protected by copyright. Copying for private or commercial purposes, in part or in whole, is not permitted unless authorised by AUDI AG. AUDI AG does not guarantee or accept any liability with respect to the correctness of information in this document. Copyright by AUDI AG.

♦ Repair set for fibre optic cables -VAS 6223-

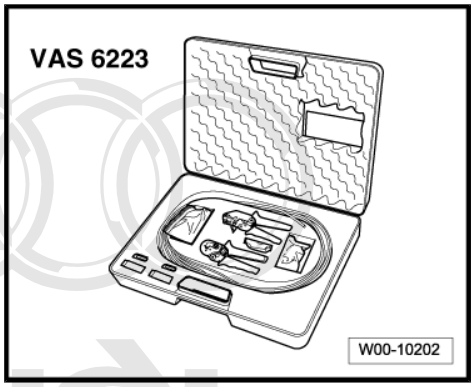

♦ Protective cap for cable connector -VAS 6223/9-

– When renewing control unit, select “Replacement” function for appropriate control unit in “Guided Fault Finding”.

Protected by copyright. Copying for private or commercial purposes, in part or in whole, is not permitted unless authorised by AUDI AG. AUDI AG does not guarantee or accept any liability with respect to the correctness of information in this document. Copyright by AUDI AG.

To do so, use the vehicle diagnostic, testing and information system -VAS 5051- .

– Switch off all electrical equipment.

– Remove ignition key.

Removing

– Open left-side luggage compartment storage area.

– Insert two radio release tools -T10057- into slots on navigation system with CD drive control unit -J401- until they engage. Pointed ends of grips must face outwards.

– Pull navigation system with CD drive control unit -J401- out of mounting frame.

– Unplug all connectors at navigation system with CD drive control unit -J401- .

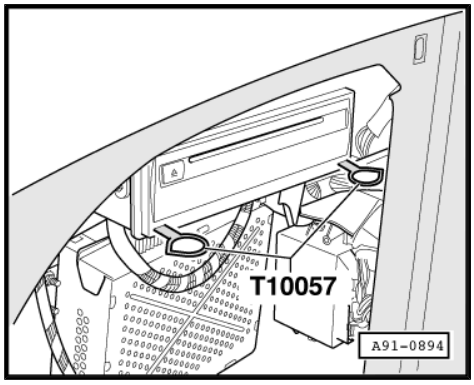

– Fit protective cap for cable connector -VAS 6223/9- -1- onto MOST bus connector -2-.

– Press release tabs on navigation system with CD drive control unit -J401- and remove radio release tool -T10057- .

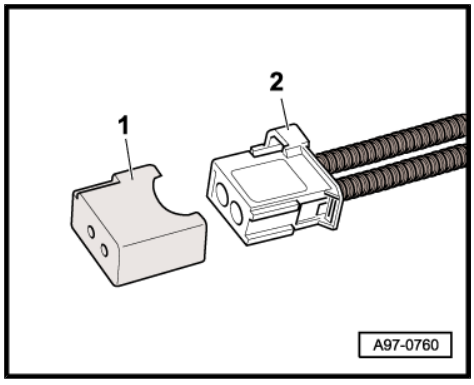

Removing mounting frame

– Unscrew nut -1- (8 Nm) and bolt -2- (8 Nm).
– Unscrew bolts -arrows- (3 Nm) in order to detach frame from slide-in module.

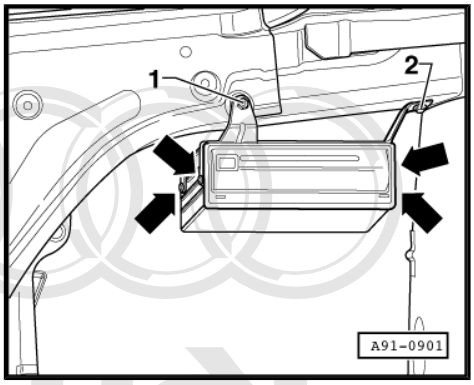

Installing

Mounting frame:

– Installation is performed in reverse sequence.

Control unit:

– Plug in all connectors.
– Insert the navigation system with CD drive control unit -J401- into mounting frame until it engages.

Protected by copyright. Copying for private or commercial purposes, in part or in whole, is not permitted unless authorised by AUDI AG. AUDI AG does not guarantee or accept any liability with respect to the correctness of information in this document. Copyright by AUDI AG.

10 Navigation system (Japan)

10.1 General notes (up to week 21/09)

The navigation system is linked to the MMI Infotainment system via the MOST Bus.

The navigation system with CD drive control unit -J401- is located in the luggage compartment. The multimedia system operating unit -E380- is used for operation.

A chip card reader control unit -J676- with traffic data aerial -R173- (toll) and the mobile phone pre-installation are integrated in the system.

Fault finding is performed via the “Guided Fault Finding” ⇒ Vehicle diagnosis, testing and information system VAS 5051.

Repairing aerial wiring ⇒ Electrical system; Rep. Gr. 97 .

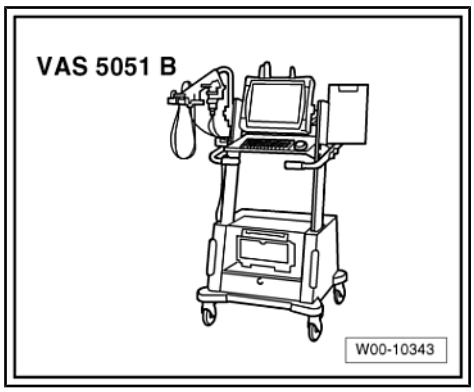

10.2 General notes (from week 22/09 onwards)

The navigation system is part of the control unit 1 for information electronics -J794- in the glove box.

The multimedia system operating unit -E380- is used for operation.

Navigation data are stored on an internal hard disk (HDD).

A chip card reader control unit -J676- with traffic data aerial -R173- (toll) is integrated in the system.

Fault finding is performed via the “Guided Fault Finding” ⇒ Vehicle diagnosis, testing and information system VAS 5051.

Repairing aerial wiring ⇒ Electrical system; Rep. Gr. 97 .

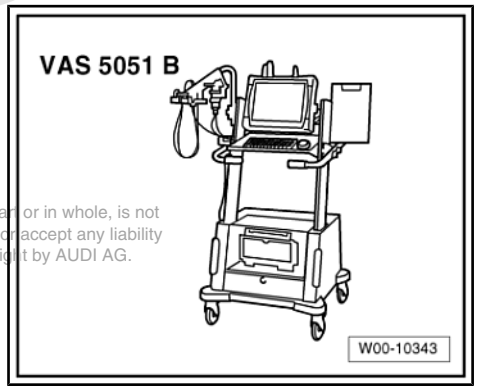

Protected by copyright. Copying for private or commercial purposes, in part or in whole, is not permitted unless authorised by AUDI AG. AUDI AG does not guarantee or accept any liability with respect to the correctness of information in this document. Copyright by AUDI AG.

10.3 Navigation system (up to model year 2007) - layout

1 - Traffic data aerial -R173- on windscreen (top right centre)

2 - Chip card reader control unit -J676- in glove box

3 - Telephone transmitter and receiver unit -R36- beneath centre console storage compartment

4 - Connection for mobile telephone -R54- in centre console storage compartment

5 - Navigation system with CD drive control unit -J401- behind luggage compartment side trim (left-side)

6 - Display and operating unit changeover unit -J728- in front of front seat (left-side) beneath floor covering

7 - Display unit for front information display and operating unit control unit -J685- in dash panel (centre)

8 - Control unit for front display and information control panel -J523- behind glove box

9 - Multimedia system operating unit -E380- in centre console (bottom)

10 - Aerial amplifier -R24- behind roof end trim (left-side)

11 - GPS aerial -R50- behind roof end trim (centre)

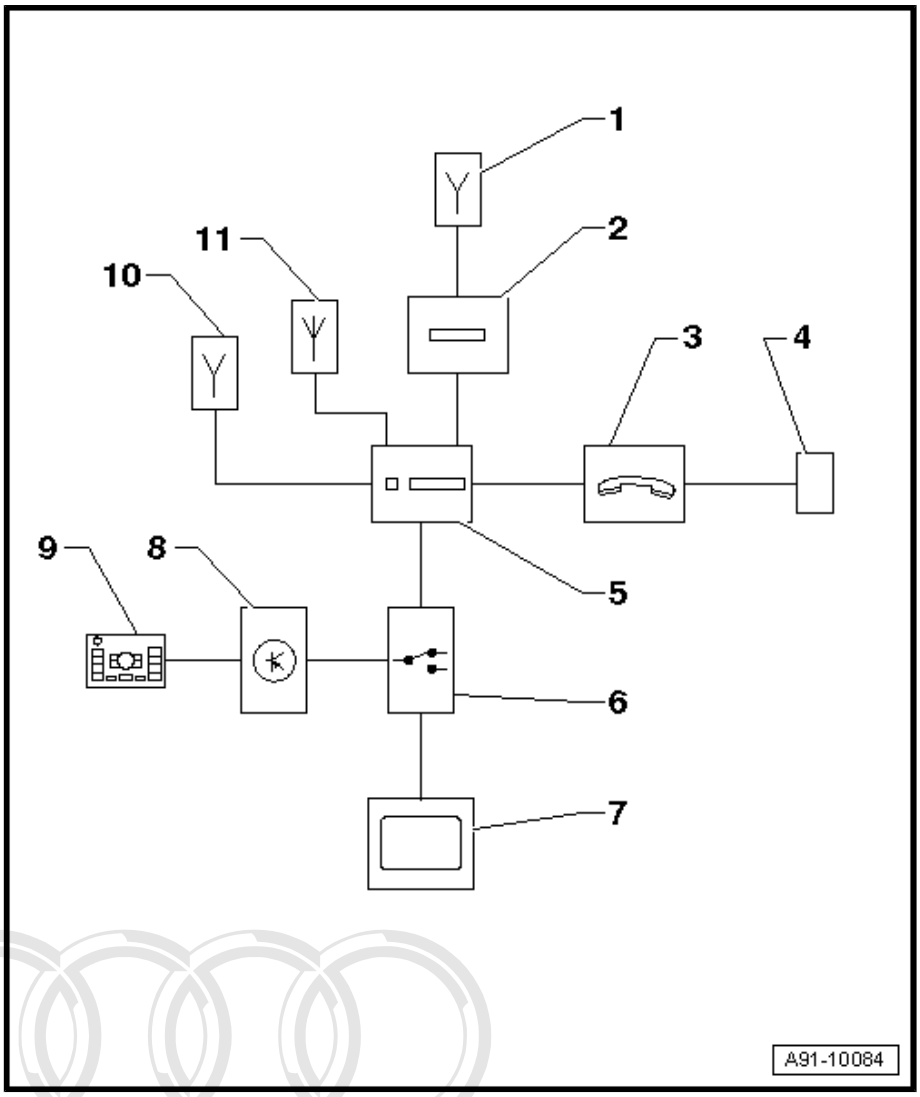

Protected by copyright. Copying for private or commercial purposes, in part or in whole, is not permitted unless authorised by AUDI AG. AUDI AG does not guarantee or accept any liability with respect to the correctness of information in this document. Copyright by AUDI AG.

10.4 Navigation system (from model year 2008 onwards, up to week 21/09) - layout

Protected by copyright. Copying for private or commercial purposes, in part or in whole, is not permitted unless authorised by AUDI AG. AUDI AG does not guarantee or accept any liability with respect to the correctness of information in this document. Copyright by AUDI AG.

1 - Traffic data aerial -R173- on windscreen (top right centre)

2 - Chip card reader control unit -J676- in glove box

3 - Navigation system with CD drive control unit -J401- behind luggage compartment side trim (left-side)

4 - Telephone transmitter and receiver unit -R36- beneath centre console storage compartment

5 - Connection for mobile telephone -R54- in centre console storage compartment

6 - Microphone unit in front roof module -R164- (telephone microphone -R38-) in front interior light -W1-

7 - Control unit for front display and information control panel -J523- behind glove box

8 - Display unit for front information display and operating unit control unit -J685- in dash panel (centre)

9 - Multimedia system operating unit -E380- in centre console (bottom)

10 - Aerial amplifier -R24- behind roof end trim (left-side)

11 - GPS aerial -R50- behind roof end trim (centre)

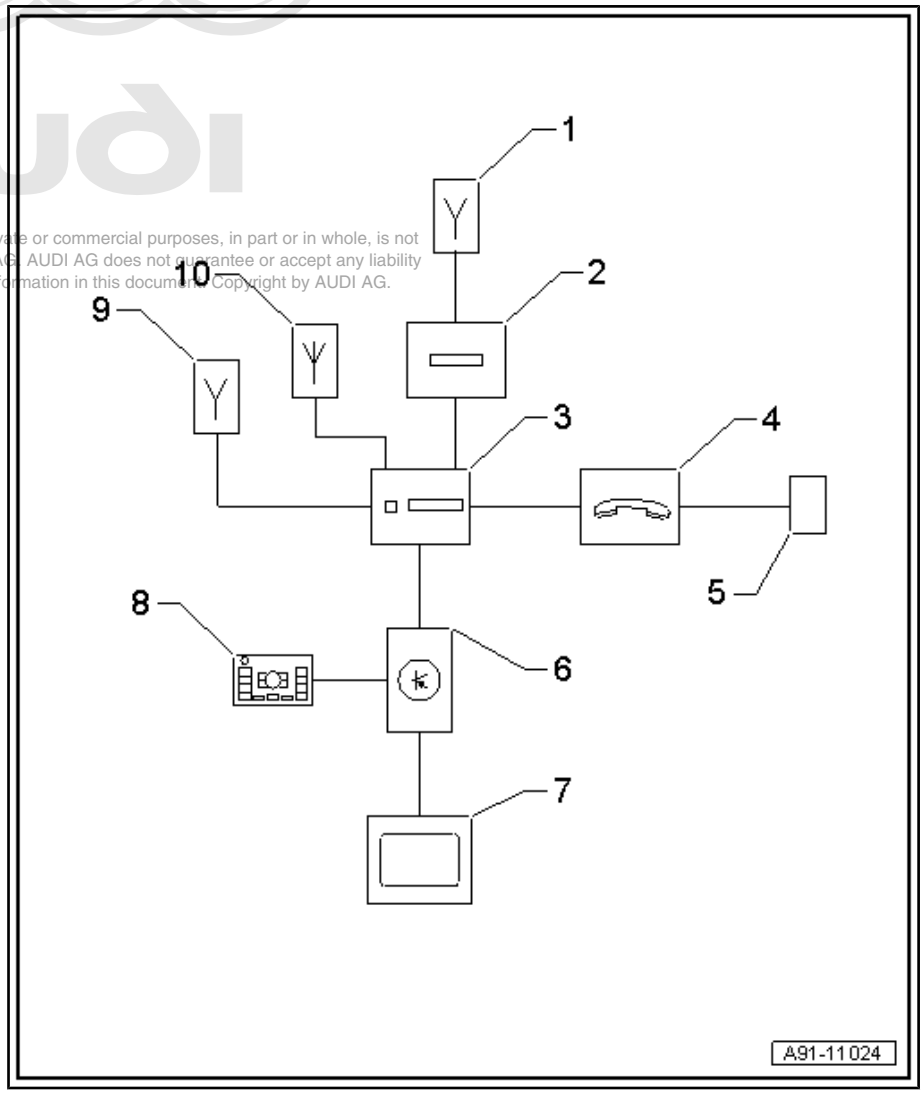

10.5 Navigation system (from week 22/09 onwards) - layout

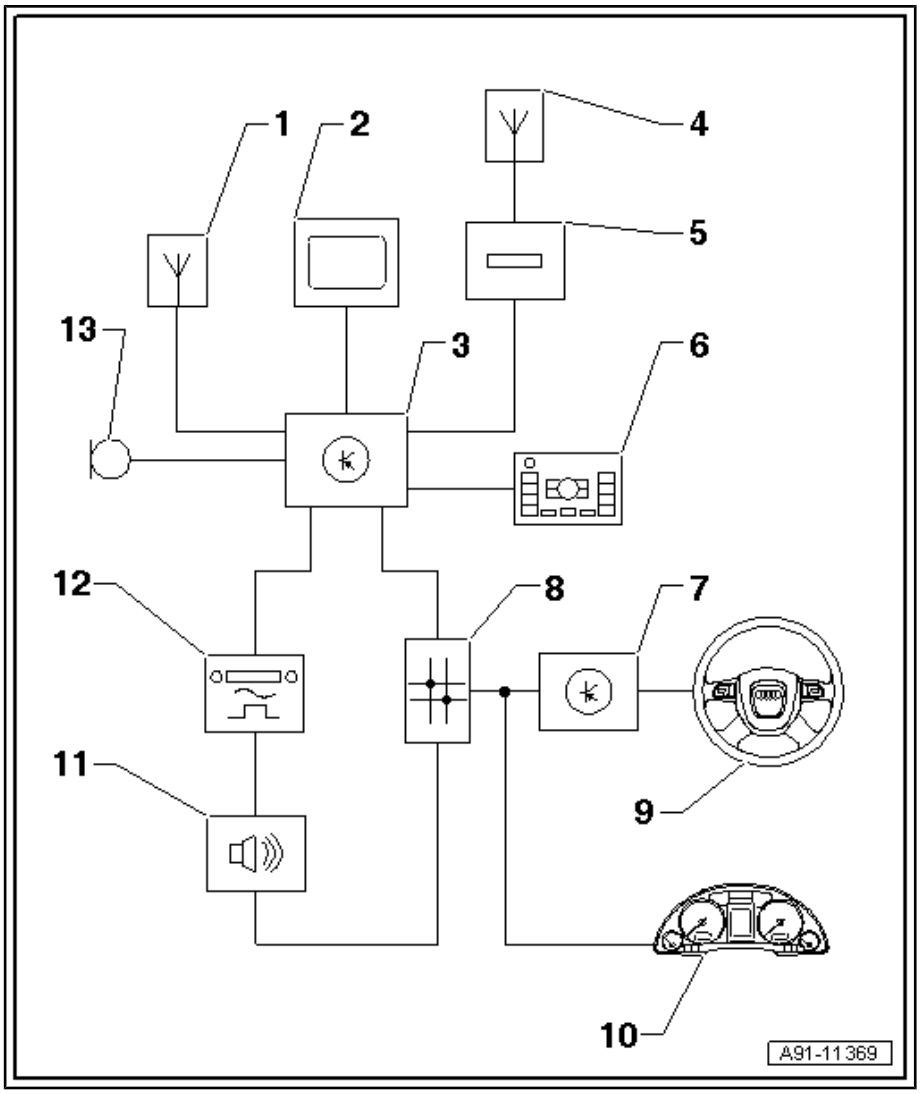

1 - Roof aerial -R216-

2 - Display unit for front information display and operating unit control unit -J685- in dash panel (centre)

3 - Control unit 1 for information electronics -J794- in glove box (left-side)

4 - Traffic data aerial -R173- on windscreen (top centre)

5 - Chip card reader control unit -J676- in glove box

6 - Multimedia system operating unit -E380- in centre console (bottom)

7 - Steering column electronics control unit -J527- on steering column on steering column switch

8 - Data bus diagnostic interface -J533- behind glove box

9 - Multi-function steering wheel

10 - Control unit in dash panel insert -J285- in dash panel

11 - Digital sound package control unit -J525- behind luggage compartment side trim (left-side)

12 - Radio -R- located behind luggage compartment side trim (left-side)

13 - Microphone unit in front roof module -R164- (front right microphone -R141-) in front interior light -W1-

Protected by copyright. Copying for private or commercial purposes, in part or in whole, is not permitted unless authorised by AUDI AG. AUDI AG does not guarantee or accept any liability with respect to the correctness of information in this document. Copyright by AUDI AG.

10.6 Connectors for navigation system (up to model year 2007)

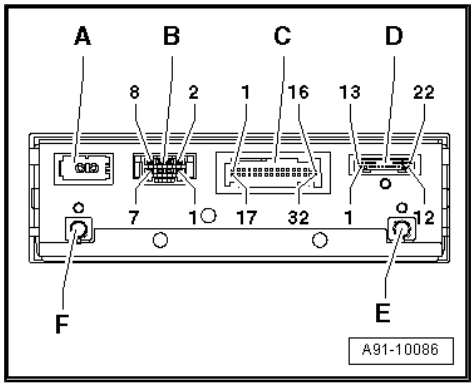

Navigation system with CD drive control unit -J401-

A - MOST bus

B - Multi-pin connector, 8-pin, black

C - Multi-pin connector, 32-pin (black) to chip card reader control unit -J676- / telephone transmitter and receiver unit -R36-

D - Multi-pin connector, 22-pin (black) to display and operating unit change-over unit -J728-

E - GPS connection (blue) from GPS aerial -R50-

F - Connection VICS (black) from aerial amplifier -R24-

Note

Contacts which are not listed are not used.

A - MOST bus

1 - Input

2 - Output

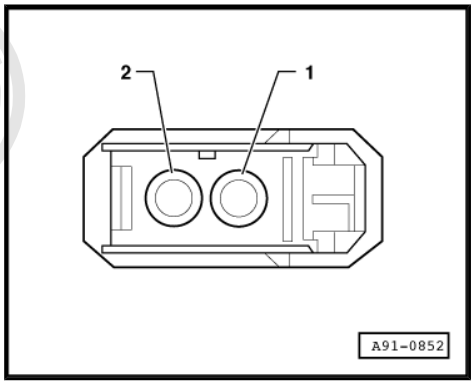

Protected by copyright. Copying for private or commercial purposes, in part or in whole, is not permitted unless authorised by AUDI AG. AUDI AG does not guarantee or accept any liability with respect to the correctness of information in this document. Copyright by AUDI AG.

B - Multi-pin connector, 8-pin, black

1 - Terminal 31

2 - Terminal 30

5 - Open circuit diagnostic lead

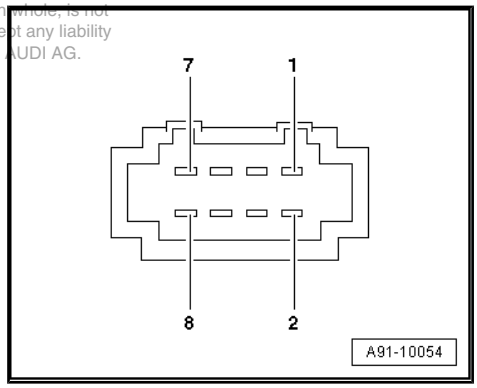

C - Multi-pin connector, 32-pin, black

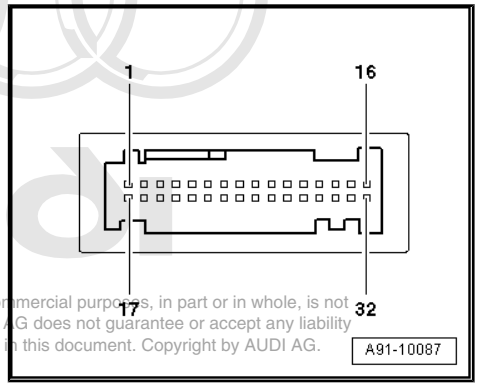

7 - Microphone input (–) from microphone unit in front roof module -R164- (telephone microphone -R38-)

8 - Data from telephone transmitter and receiver unit -R36-

10 - Earth to telephone transmitter and receiver unit -R36-

11 - Data from chip card reader control unit -J676-

12 - Terminal 31 (screen earth) to chip card reader control unit -J676-

14 - Terminal 31 (screen earth) to chip card reader control unit -J676-

Protected by copyright. Copying for private or commercial purposes, in part or in whole, is not permitted unless authorised by AUDI AG. AUDI AG does not guarantee or accept any liability with respect to the correctness of information in this document. Copyright by AUDI AG.

23 - Microphone input (+) from microphone unit in front roof module -R164- (telephone microphone -R38-)

24 - Data to telephone transmitter and receiver unit -R36-

26 - Switch-on signal from telephone transmitter and receiver unit -R36-

27 - Data to chip card reader control unit -J676-

29 - Data from chip card reader control unit -J676-

30 - Data to chip card reader control unit -J676-

32 - Switch-on signal from chip card reader control unit -J676- / traffic data aerial -R173-

10.7 Connectors for navigation system (from model year 2008 onwards, up to week 21/09)

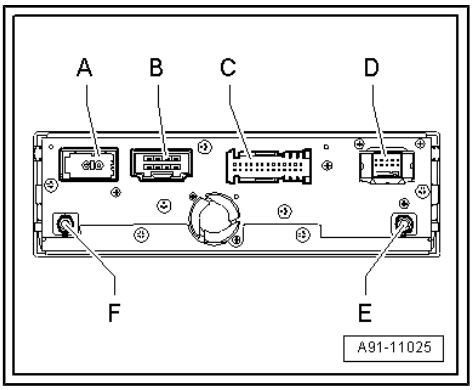

Navigation system with CD drive control unit -J401-

A - MOST bus

B - Multi-pin connector, 8-pin, black

C - Multi-pin connector, 26-pin (black) to chip card reader control unit -J676- / telephone transmitter and receiver unit -R36-

D - Multi-pin connector, 10-pin (black) to control unit for front display and information control panel -J523-

E - GPS connection (blue) from GPS aerial -R50-

F - Connection VICS (black) from aerial amplifier -R24-

Note

Contacts which are not listed are not used.

A - MOST bus

1 - Input

2 - Output

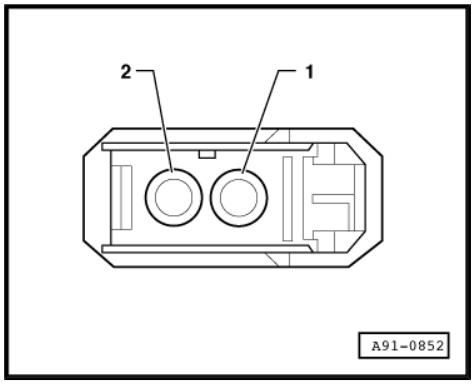

B - Multi-pin connector, 8-pin, black

1 - Terminal 31

2 - Terminal 30

4 - Speed signal from ABS control unit with EDL -J104-

5 - Open circuit diagnostic lead

7 - Microphone input (–) from microphone unit in front roof module -R164- (telephone microphone -R38-)

8 - Microphone input (+) from microphone unit in front roof module -R164- (telephone microphone -R38-)

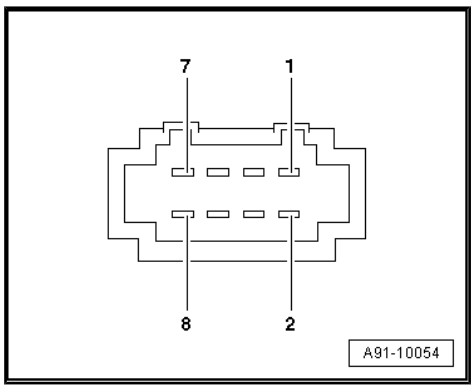

C - Multi-pin connector, 26-pin, black

5 - Data to telephone transmitter and receiver unit -R36-

6 - Terminal 31 (screen earth) to telephone transmitter and receiver unit -R36-

7 - Switch-on signal from telephone transmitter and receiver unit -R36-

8 - Data to telephone transmitter and receiver unit -R36-

10 - Data from chip card reader control unit -J676-

11 - Data from chip card reader control unit -J676-

13 - Switch-on signal from chip card reader control unit -J676- / traffic data aerial -R173-

18 - Data to telephone transmitter and receiver unit -R36-

20 - Terminal 31 (screen earth) to chip card reader control unit -J676-

21 - Data to chip card reader control unit -J676-

24 - Terminal 31 (screen earth) to chip card reader control unit -J676-

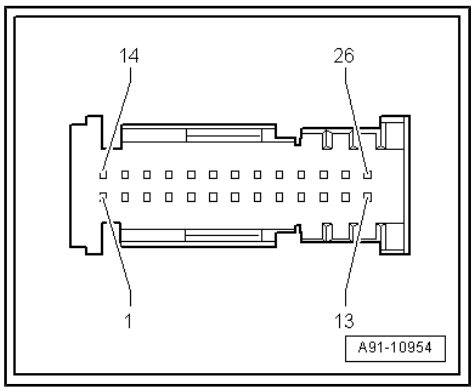

Protected by copyright. Copying for private or commercial purposes, in part or in whole, is not permitted unless authorised by AUDI AG. AUDI AG does not guarantee or accept any liability with respect to the correctness of information in this document. Copyright by AUDI AG.

D - Multi-pin connector, 10-pin, black

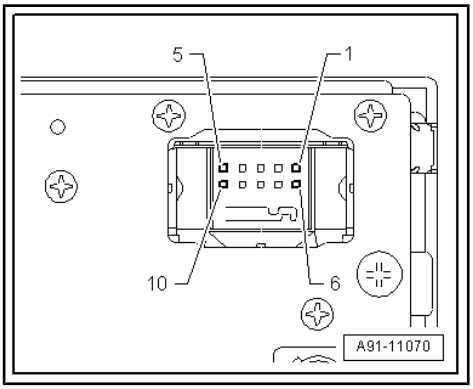

All pins are connected to the control unit for front display and information control panel -J523- .

1 - Tx2 (+)
2 - Tx2 (–)
3 - LV-Diag
4 - Tx1 (+)
5 - Tx1 (–)
6 - CLK (+)
7 - CLK (–)
8 - Earth
9 - Tx0 (+)
10 - Tx0 (–)

10.8 Connectors for navigation system (from week 22/09 onwards)

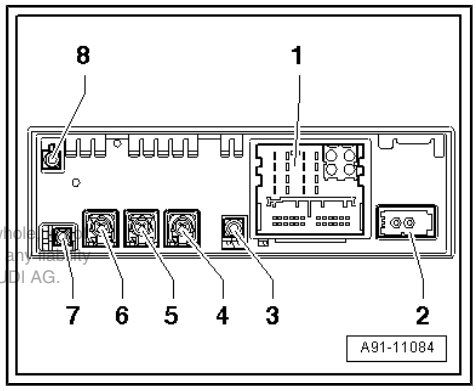

Control unit 1 for information electronics -J794-

1 - Connection block with four multi-pin connectors
2 - MOST bus
3 - FBAS input (green) from TV tuner -R78-
4 - Multi-pin connector, 4-pin, grey (T4am) to display unit for front information display and operating unit control unit -J685-
5 - Multi-pin connector, 4-pin (T4ao) to connection for external audio sources -R199-
6 - Not used
7 - GPS connection from GPS aerial -R50- / roof aerial -R216-
8 - Not used

Protected by copyright. Copying for private or commercial purposes, in part or in whole, is not permitted unless authorized by AUDI AG. AUDI AG does not guarantee or accept any liability with respect to the correctness of information in this document. Copyright by AUDI AG.

Note

Contacts which are not listed are not used.

A - Multi-pin connector, 8-pin, brown (T8z)

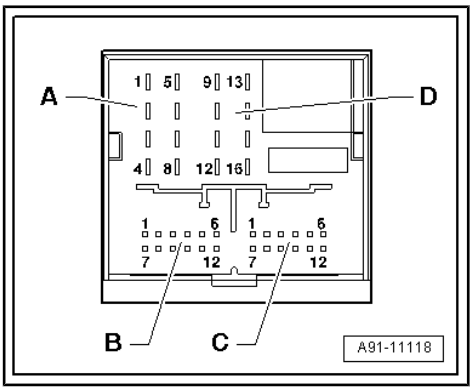

1 - Not used
2 - Voltage supply to multimedia system operating unit -E380-
3 - Wake-up to multimedia system operating unit -E380-
4 - Not used
5 - Switch-on signal from chip card reader control unit -J676-
6 - Not used
7 - Res MU to multimedia system operating unit -E380-
8 - Open circuit diagnostic lead

B - Multi-pin connector, 12-pin, blue (T12y)

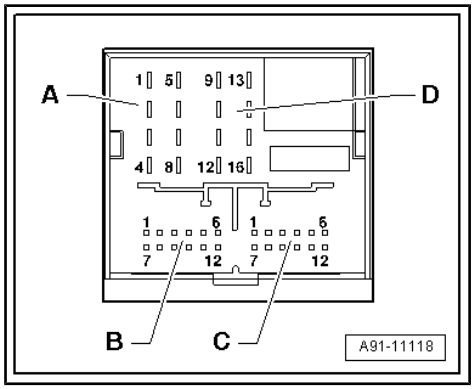

Left-hand drive vehicle

1 - Not used

2 - Microphone input (+) from microphone unit in front roof module -R164- (front right microphone -R141-)

3 - Microphone input (–) from microphone unit in front roof module -R164- (front right microphone -R141-)

4 - Data VICS to chip card reader control unit -J676-

5 - FBAS wire (–) from reversing camera system control unit -J772-

6 - Data ETC to chip card reader control unit -J676-

7 - Not used

8 - Microphone input (+) from microphone unit in front roof module -R164- (front left microphone -R140-)

9 - Microphone input (–) from microphone unit in front roof module -R164- (front left microphone -R140-)

10 - Data VICS from chip card reader control unit -J676-

11 - FBAS wire (+) from reversing camera system control unit -J772-

12 - Data ETC from chip card reader control unit -J676-

Right-hand drive vehicle

1 - Not used

2 - Microphone input (+) from microphone unit in front roof module -R164- (front left microphone -R140-)

3 - Microphone input (–) from microphone unit in front roof module -R164- (front left microphone -R140-)

4 - Data VICS to chip card reader control unit -J676-

5 - FBAS wire (–) from reversing camera system control unit -J772-

6 - Data ETC to chip card reader control unit -J676-

7 - Not used

8 - Microphone input (+) from microphone unit in front roof module -R164- (front right microphone -R141-)

9 - Microphone input (–) from microphone unit in front roof module -R164- (front right microphone -R141-)

10 - Data VICS from chip card reader control unit -J676-

11 - FBAS wire (+) from reversing camera system control unit -J772-

12 - Data ETC from chip card reader control unit -J676-

Protected by copyright. Copying for private or commercial purposes, in part or in whole, is not permitted unless authorised by AUDI AG. AUDI AG does not guarantee or accept any liability with respect to the correctness of information in this document. Copyright by AUDI AG.

D - Multi-pin connector, 8-pin, black (T8)

10 - Data from multimedia system operating unit -E380-

11 - Data to multimedia system operating unit -E380-

12 - Terminal 31

14 - Res BT from multimedia system operating unit -E380-

15 - Terminal 30

16 - Earth to multimedia system operating unit -E380-

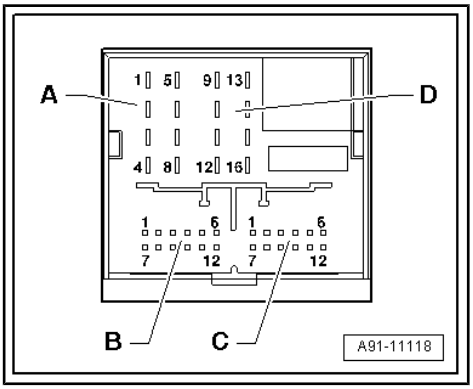

2 - MOST bus

1 - Input

2 - Output

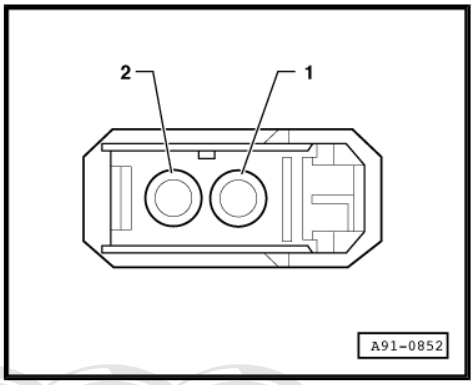

4 - Multi-pin connector, 4-pin, grey (T4bd)

All pins are connected to the display unit for front information display and operating unit control unit -J685- .

1 - LVDS (–)

2 - LIN

3 - LVDS (+)

4 - Earth

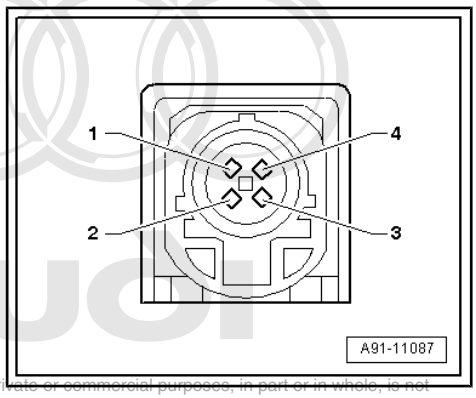

Protected by copyright. Copying for private or commercial purposes, in part or in whole, is not permitted unless authorised by AUDI AG. AUDI AG does not guarantee or accept any liability with respect to the correctness of information in this document. Copyright by AUDI AG.

5 - Multi-pin connector, 4-pin, yellow (T4bc)

All pins are connected to the connection for external audio sources -R199- .

1 - D (+)

2 - iPod detected

3 - D (–)

4 - Earth

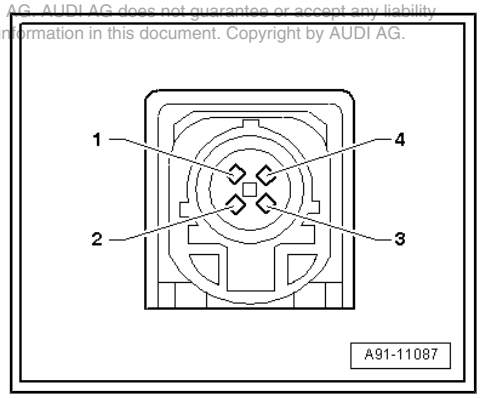

10.9 Connector on chip card reader control unit -J676- (up to week 21/09)

Chip card reader control unit -J676-

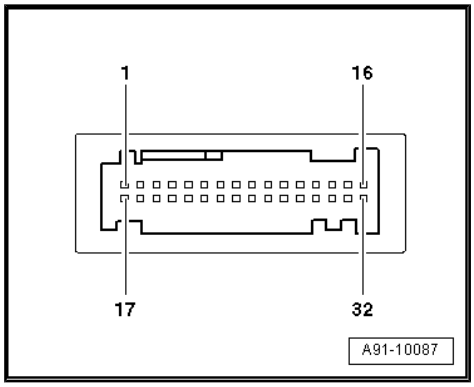

Note

Contacts which are not listed are not used.

Multi-pin connector, 32-pin, black

1-16 - To traffic data aerial -R173-

17 - Data VICS to navigation system with CD drive control unit -J401-

18 - Terminal 31 (screen earth) to navigation system with CD drive control unit -J401-

19 - Data VICS from navigation system with CD drive control unit -J401-

21 - Switch-on signal to navigation system with CD drive control unit -J401-

22 - Terminal 30

23 - Data ETC to navigation system with CD drive control unit -J401-

24 - Terminal 31 (screen earth) to navigation system with CD drive control unit -J401-

25 - Data ETC from navigation system with CD drive control unit -J401-

28 - Terminal 31

Protected by copyright. Copying for private or commercial purposes, in part or in whole, is not permitted unless authorised by AUDI AG. AUDI AG does not guarantee or accept any liability with respect to the correctness of information in this document. Copyright by AUDI AG.

10.10 Connector on chip card reader control unit -J676- (from week 22/09 onwards)

Chip card reader control unit -J676-

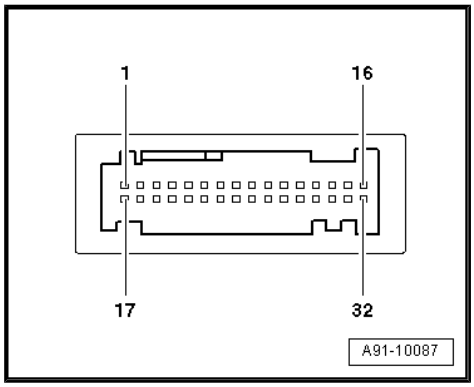

Note

Contacts which are not listed are not used.

Multi-pin connector, 32-pin, black (T32l)

1-16 - To traffic data aerial -R173-

17 - Data VICS to control unit 1 for information electronics -J794-

19 - Data VICS from control unit 1 for information electronics -J794-

21 - Switch-on signal to control unit 1 for information electronics -J794-

22 - Terminal 30

23 - Data ETC to control unit 1 for information electronics -J794-

25 - Data ETC from control unit 1 for information electronics -J794-

28 - Terminal 31

10.11 Overview of fitting locations (up to week 21/09)

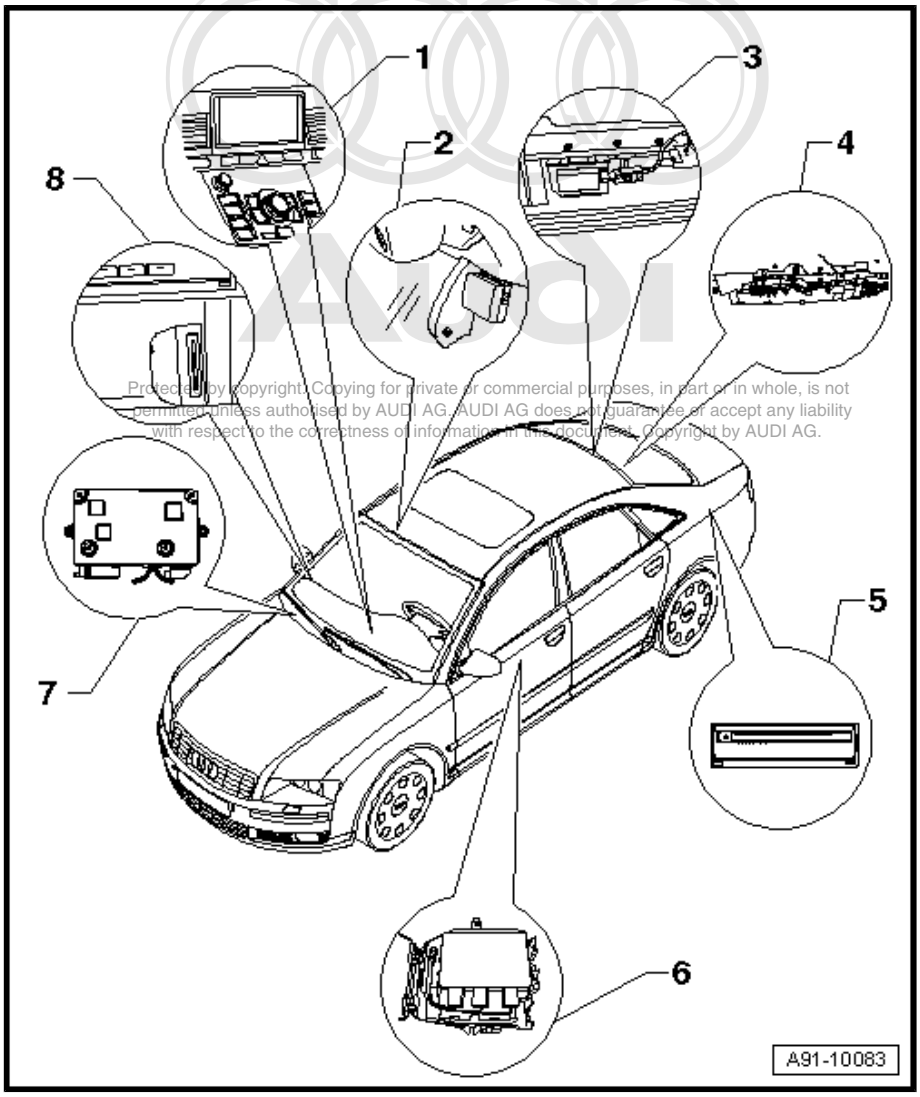

Protected by copyright. Copying for private or commercial purposes, in part or in whole, is not permitted unless authorised by AUDI AG. AUDI AG does not guarantee or accept any liability with respect to the correctness of information in this document. Copyright by AUDI AG.

1 - Display unit for front information display and operating unit control unit -J685-

- ❑ In dash panel (centre)

- Multimedia system operating unit -E380-

- ❑ In centre console (bottom)

2 - Traffic data aerial -R173-

- ❑ On windscreen (top right centre)
- ❑ Removing and installing ⇒ page 216

3 - GPS aerial -R50-

- ❑ Behind roof end trim (centre)
- ❑ Overview ⇒ page 85

4 - Aerial amplifier -R24-

- ❑ Behind roof end trim (left-side)
- ❑ Overview ⇒ page 85

5 - Navigation system with CD drive control unit -J401-

- ❑ Behind luggage compartment side trim (left-side)
- ❑ Pin assignment (up to model year 2007) ⇒ page 208
- ❑ Pin assignment (from model year 2008 onwards, up to week 21/09) ⇒ page 209
- ❑ Removing and installing ⇒ page 201

6 - Display and operating unit changeover unit -J728-

- ❑ Up to model year 2007
- ❑ In front of front left seat beneath floor covering

7 - Control unit for front display and information control panel -J523-

- ❑ Behind glove box

8 - Chip card reader control unit -J676-

- ❑ In glove box
- ❑ Pin assignment (up to week 21/09) ⇒ page 214
- ❑ Removing and installing ⇒ page 217

10.12 Overview of fitting locations (from week 22/09 onwards)

1 - Control unit 1 for information electronics -J794-

- ❑ In glove box (left-side)
- ❑ Pin assignment (from week 22/09 onwards) ⇒ page 211
- ❑ Removing and installing (from week 36/08 onwards) ⇒ page 21

2 - Chip card reader control unit -J676-

- ❑ In glove box
- ❑ Pin assignment (from week 22/09 onwards) ⇒ page 214
- ❑ Removing and installing ⇒ page 217

3 - Traffic data aerial -R173-

- ❑ On windscreen (top right centre)
- ❑ Removing and installing ⇒ page 216

4 - GPS aerial -R50-

- ❑ Behind roof end trim (centre)
- ❑ Overview ⇒ page 85

5 - Display unit for front information display and operating unit control unit -J685-

- ❑ In dash panel (centre)

- Multimedia system operating unit -E380-

- ❑ In centre console (bottom)

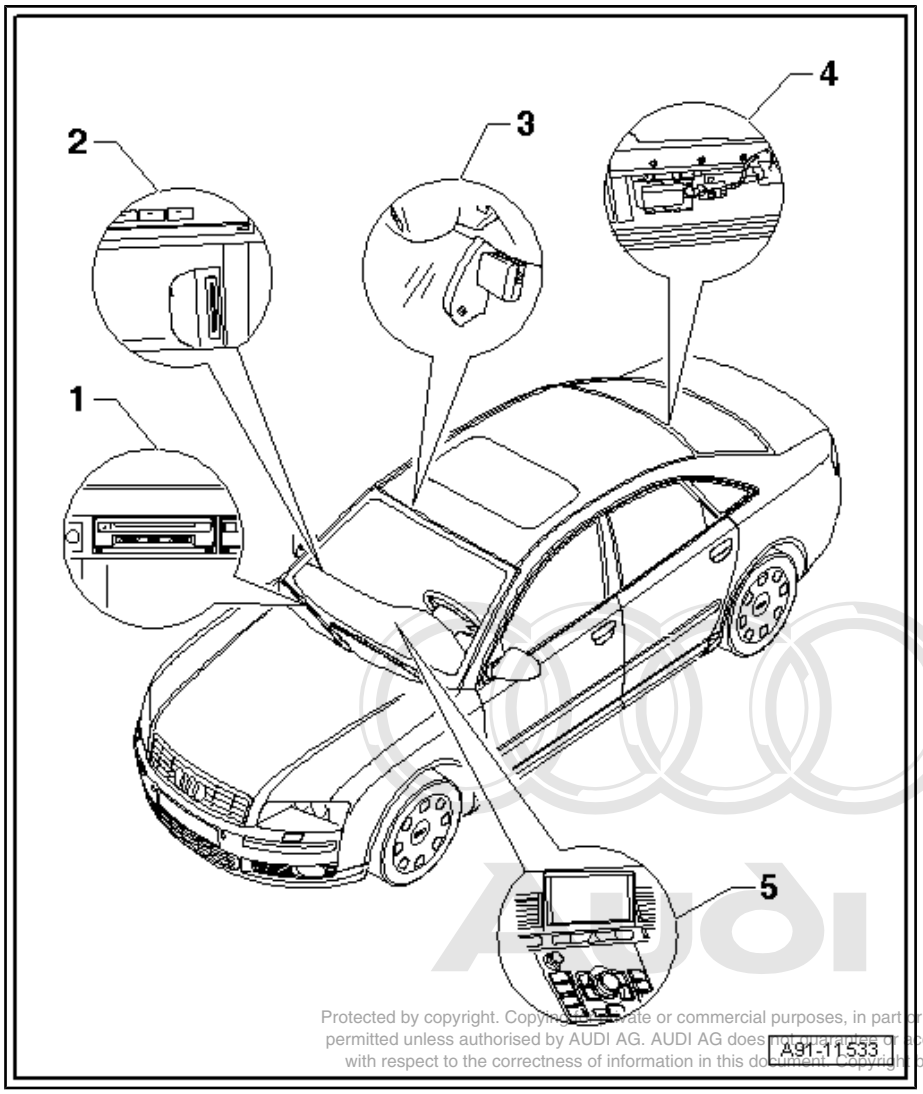

Protected by copyright. Copying for private or commercial purposes, in part or in whole, is not permitted unless authorised by AUDI AG. AUDI AG does not guarantee or accept any liability with respect to the correctness of information in this document. Copyright by AUDI AG.

10.13 Removing and installing traffic data aerial -R173-

– Switch off all electrical equipment.

– Remove ignition key.

Removing

The connectors for the traffic data aerial -R173- are located behind the front interior light -W1- .

– Remove front interior light -W1- ⇒ Electrical system; Rep. Gr. 96 .

Connectors at front interior light -W1- -3- do not need to be detached.

– Release and unplug connectors -1- and -2-.

Removing traffic data aerial -R173- :

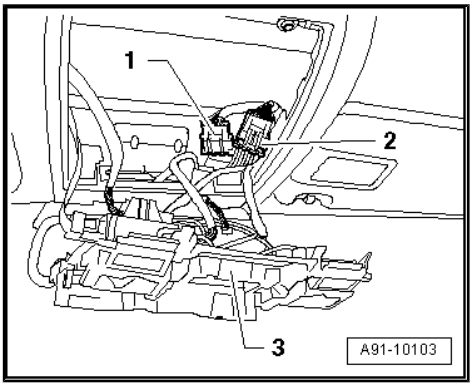

– Use a small screwdriver to pull out the expanding clip -2- in direction of -arrow-.

– Pull traffic data aerial -R173- -1- down off windscreen in direction of -arrow-.

Installing

– Installation is performed in reverse sequence.

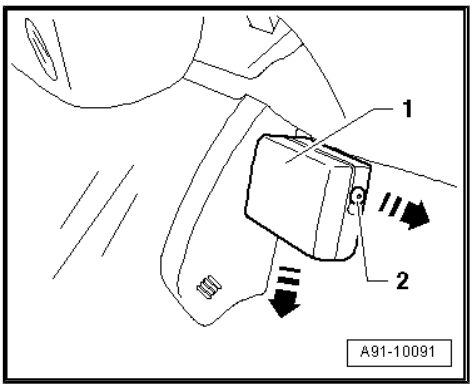

10.14 Removing and installing chip card reader control unit -J676-

The chip card reader control unit -J676- is inserted beneath the MiniDisc player -R153- at the glove box lining.

– Switch off all electrical equipment.

– Remove ignition key.

Removing

– Open glove box.

– Remove chip card.

– Slide chip card reader control unit -J676- -1- towards rear in direction of -arrow- until it can be detached from lining -2-.

– Pull out retaining clip -4-.

– Unplug connector -3- at chip card reader control unit -J676- .

Installing

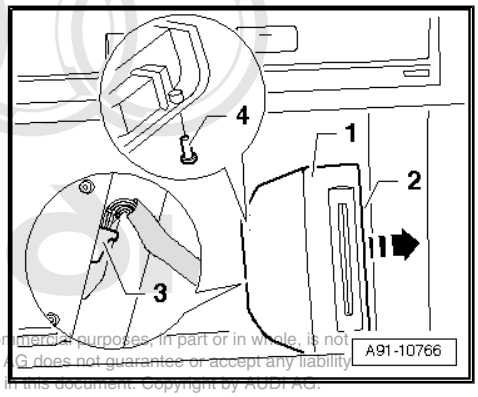

Protected by copyright. Copying for private or commercial purposes, in part or in whole, is not permitted unless authorised by AUDI AG. AUDI AG does not guarantee or accept any liability with respect to the correctness of information in this document. Copyright by AUDI AG.

– Plug in connector -3- and then slide retaining clip -4- through opening.
– Installation is performed in reverse sequence.
– Make sure all retaining tabs of chip card reader control unit - J676- engage in lining.

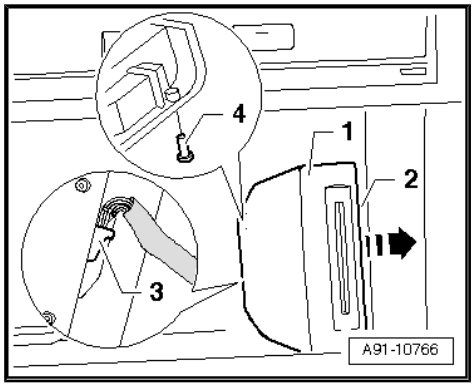

Protected by copyright. Copying for private or commercial purposes, in part or in whole, is not permitted unless authorised by AUDI AG. AUDI AG does not guarantee or accept any liability with respect to the correctness of information in this document. Copyright by AUDI AG.

11 TV system

11.1 General notes (up to week 35/08)

The TV system is part of the MMI Infotainment system.

The TV tuner -R78- and the DVD player -R7- (in the glove box) are connected to the other components of the MMI Infotainment system via the MOST Bus. The multimedia system operating unit -E380- is used for operation.

In addition, a digital TV tuner -R171- can be fitted for areas where digital TV reception (DVB-T) is possible. The digital TV tuner -R171- is operated via a separate remote control.

The digital TV tuner -R171- is not connected to a BUS system; it has a limited self-diagnosis capability via the analogue TV tuner -R78-

The signals from the rear window aerials reach the digital TV tuner -R171- via the aerial amplifier -R24- and are then looped through to the TV tuner -R78- .

From model year 2006 onwards, a so-called “hybrid” TV tuner -R78- is fitted for receiving analogue and digital TV channels.

Fault finding on the analogue/hybrid TV tuner -R78- is performed via “Guided Fault Finding” using the ⇒ Vehicle diagnosis, testing and information system VAS 5051.

Repairing aerial wiring ⇒ Electrical system; Rep. Gr. 97 .

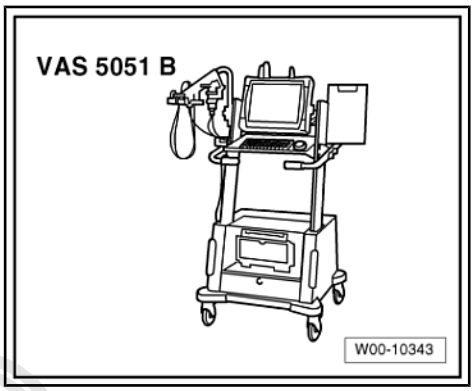

11.2 General notes (from week 36/08 onwards)

The TV system is part of the MMI Infotainment system.

The TV tuner -R78- is connected to the other components of the Infotainment system via the MOST Bus. The multimedia system operating unit -E380- is used for operation.

A so-called “hybrid” tuner is fitted for receiving analogue and digital TV channels.

A DVD drive is fitted in the control unit 1 for information electronics -J794- and can be used to play DVDs.

Copyright AUDI AG. Copying for private or commercial purposes, in part or in whole, is not permitted unless authorised by AUDI AG. AUDI AG does not guarantee or accept any liability with respect to the correctness of information in this document. Copyright by AUDI AG.

Fault finding is performed via the “Guided Fault Finding” ⇒ Vehicle diagnosis, testing and information system VAS 5051.

Repairing aerial wiring ⇒ Electrical system; Rep. Gr. 97 .

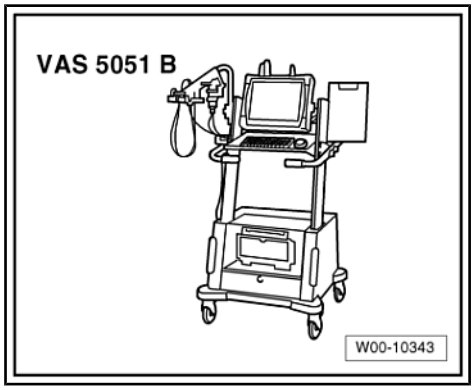

11.3 TV system (up to week 35/08) - layout

1 - Display unit for front information display and operating unit control unit -J685- in dash panel (centre)

2 - Control unit for front display and information control panel -J523- behind glove box

3 - Multimedia system operating unit -E380- in centre console (bottom)

4 - Data bus diagnostic interface -J533- behind glove box

5 - Media player in position 1 -R118- / media player in position 2 -R119- in glove box

6 - TV tuner -R78- (analogue/ hybrid) behind luggage compartment side trim (left-side)

7 - Digital TV tuner -R171- (up to MY 05) behind luggage compartment side trim (left-side)

8 - Aerial amplifier -R24- behind roof end trim (left-side)

9 - Rear window aerials

10 - Digital sound package control unit -J525- behind luggage compartment side trim (left-side)

11 - Sound systems

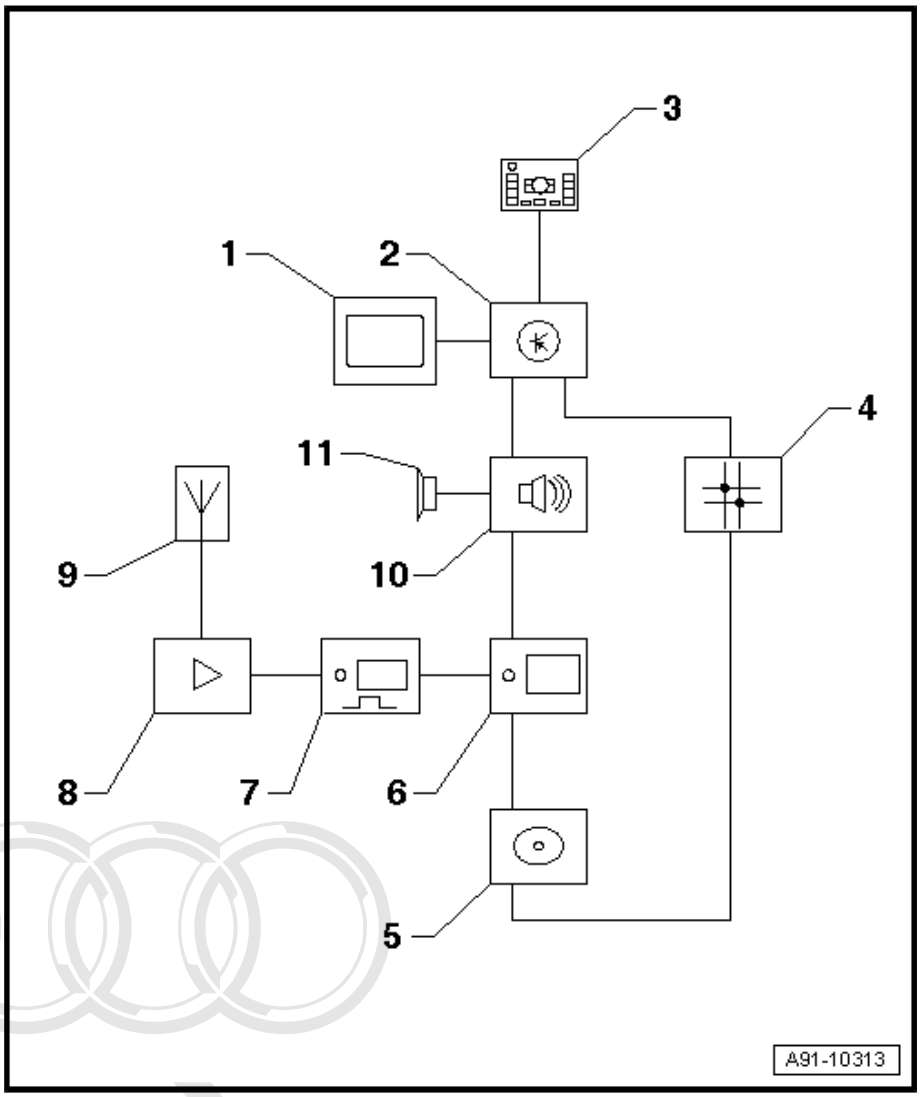

Protected by copyright. Copying for private or commercial purposes, in part or in whole, is not permitted unless authorised by AUDI AG. AUDI AG does not guarantee or accept any liability with respect to the correctness of information in this document. Copyright by AUDI AG.

11.4 TV system (from week 36/08 onwards) - layout

Protected by copyright. Copying for private or commercial purposes, in part or in whole, is not permitted unless authorised by AUDI AG. AUDI AG does not guarantee or accept any liability with respect to the correctness of information in this document. Copyright by AUDI AG.

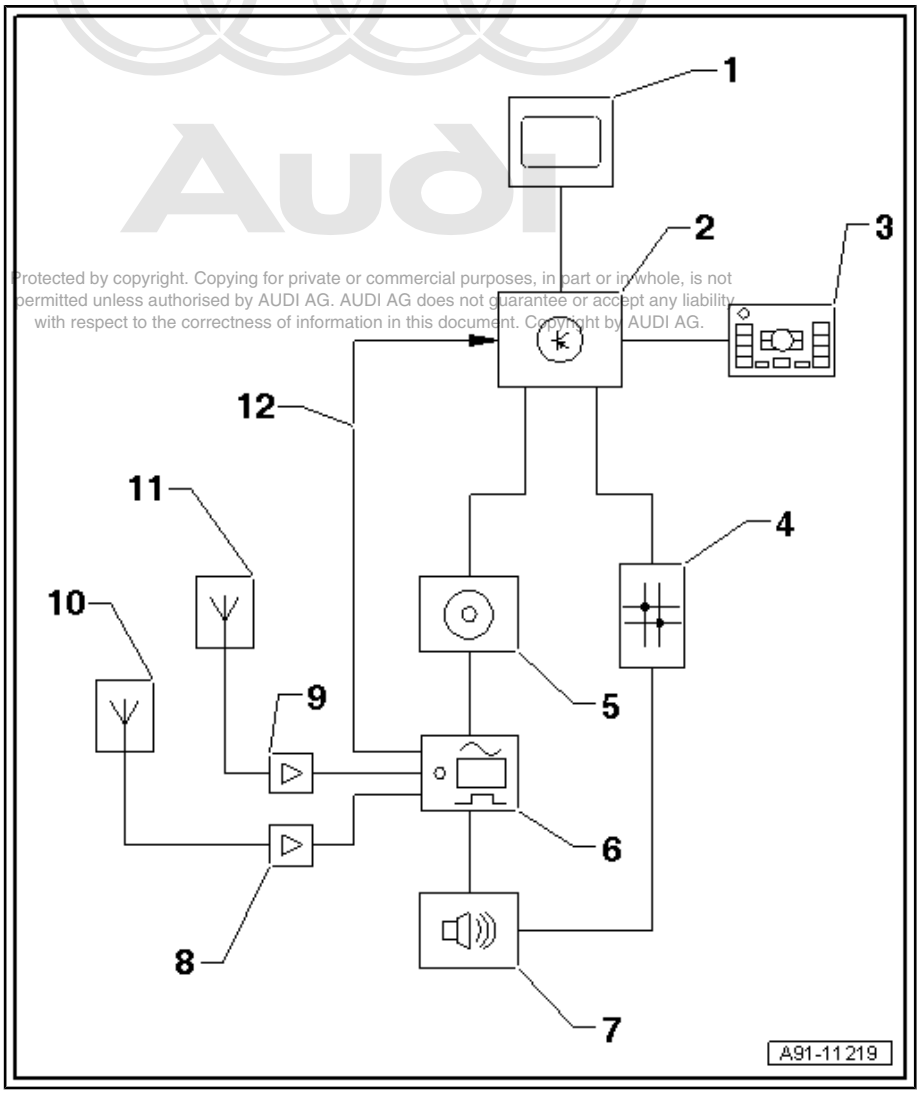

1 - Display unit for front information display and operating unit control unit -J685- in dash panel (centre)

2 - Control unit 1 for information electronics -J794- (with DVD player) in glove box (left-side)

3 - Multimedia system operating unit -E380- in centre console (bottom)

4 - Data bus diagnostic interface -J533- behind glove box

5 - CD changer -R41- in glove box (right-side)

6 - TV tuner -R78- behind luggage compartment side trim (left-side)

7 - Digital sound package control unit -J525- behind luggage compartment side trim (left-side)

8 - Aerial amplifier -R24- behind roof end trim (left-side)

9 - Aerial amplifier -R24- behind roof end trim (left-side)

10 - TV aerial 2 -R56- / TV aerial 3 -R57-

11 - TV aerial 1 -R55-

12 - FBAS wire to control unit 1 for information electronics -J794-

11.5 Connectors on TV tuner -R78- (analogue)

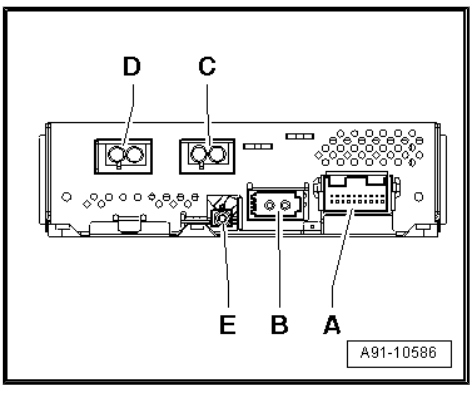

TV tuner -R78-

A - Multi-pin connector, 20-pin, red (T20f)

B - MOST bus

C - Connection TV3/TV4 (green) from aerial amplifier -R24- / digital TV tuner -R171-

D - Connection TV1/TV2 (brown) from aerial amplifier -R24- / digital TV tuner -R171-

E - FBAS output (green) to control unit for front display and information control panel -J523-

Note

Contacts which are not listed are not used.

A - Multi-pin connector, 20-pin without RSE, red (T20f)

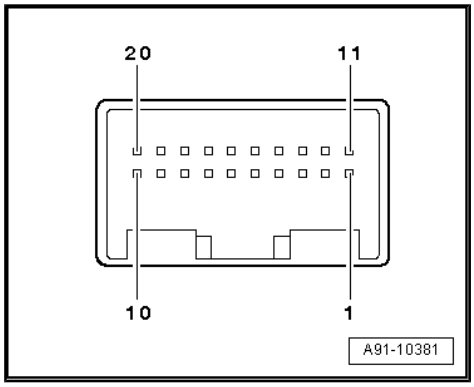

1 - Terminal 30

2 - Terminal 31

3 - Open circuit diagnostic lead

8 - Screen earth 1

9 - Screen earth 1

10 - Audio Input, left 1

11 - Audio Input, right 1

12 - Video Input 1

13 - Screen earth 1

14 - Screen earth 2

15 - Screen earth 2

16 - Audio Input, left 2

17 - Audio Input, right 2

18 - Video Input 2

19 - Screen earth 2

A - Multi-pin connector, 20-pin with RSE, red (T20f)

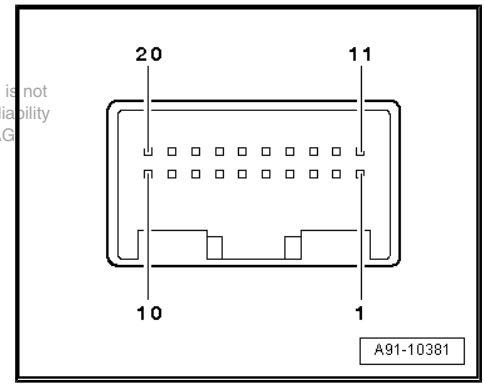

Protected by copyright. Copying for private or commercial purposes, in part or in whole, is not permitted unless authorised by AUDI AG. AUDI AG does not guarantee or accept any liability with respect to the correctness of information in this document. Copyright by AUDI AG

1 - Terminal 30

2 - Terminal 31

3 - Open circuit diagnostic lead

4 - Video output to multimedia system control unit -J650- (RSE)

5 - Audio output to multimedia system control unit -J650- (RSE)

6 - Screen earth (audio)

7 - Audio output (right-side) to multimedia system control unit -J650- (RSE)

8 - Screen earth (video)

9 - Screen earth (audio)

10 - Audio input (left-side) 1 from multimedia system control unit -J650- (RSE)

11 - Audio input (right-side) 1 from multimedia system control unit -J650- (RSE)

12 - Video input 1 from multimedia system control unit -J650- (RSE)

13 - Screen earth 1 (video)

14 - Screen earth 2 (not used)

15 - Screen earth 2 (not used)

16 - Audio input (left-side) 2 (not used)

17 - Audio input (right-side) 2 (not used)

18 - Video input 2 (not used)

19 - Screen earth 2 (not used)

20 - I/O switch PIN from multimedia system control unit -J650- (RSE)

B - MOST bus

1 - Input

2 - Output

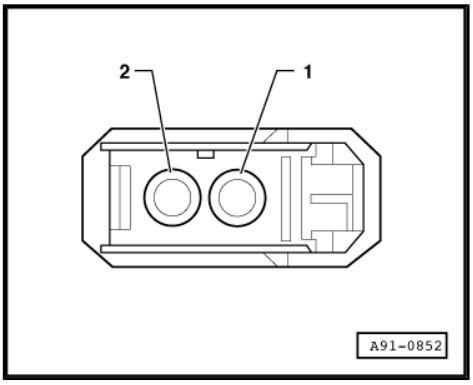

11.6 Connectors on digital TV tuner -R171-

Digital TV tuner -R171-

A - Connection TV1/TV2 (brown) from aerial amplifier -R24-

B - Connection TV3/TV4 (green) from aerial amplifier -R24-

C - Connection TV3/TV4 (green) to TV tuner -R78- (analogue)

D - Connection TV1/TV2 (brown) to TV tuner -R78- (analogue)

E - Button for initialising remote control

F - Multi-pin connector, 20-pin, red (T20g)

G - Connection for SW download cable (not used)

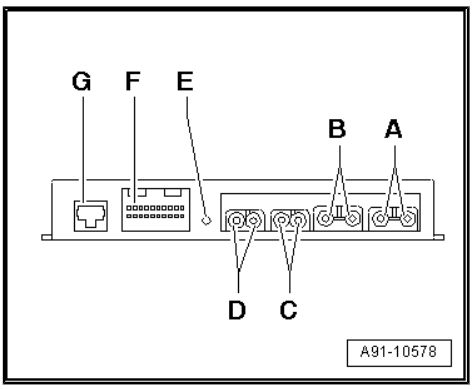

Note

Contacts which are not listed are not used.

F - Multi-pin connector, 20-pin, red (T20g)

1 - Screen earth

2 - Video Output

3 - Screen earth

4 - Audio Output, left

5 - Audio Output, right

6 - Screen earth

7 - Screen earth

8 - Terminal 31

9 - Power on/off

10 - Terminal 30

11 - Screen earth

12 - Video input

13 - Screen earth

14 - Audio Input, left

15 - Audio Input, right

16 - Screen earth

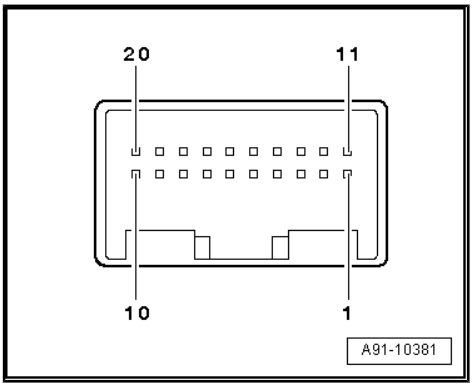

Protected by copyright. Copying for private or commercial purposes, in part or in whole, is not permitted unless authorised by AUDI AG. AUDI AG does not guarantee or accept any liability with respect to the correctness of information in this document. Copyright by AUDI AG.

11.7 Connectors on TV tuner -R78- (up to week 35/08)

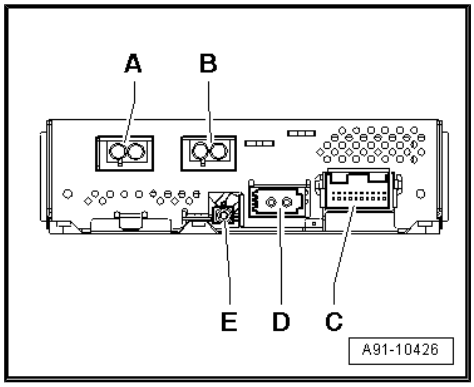

TV tuner -R78-

A - Connection TV1/TV2 (brown) from aerial amplifier -R24- (TV1/TV2) up to model year 2006

- Connection TV1/TV2 (brown) from aerial amplifier -R24- (TV4/TV3) from model year 2007 onwards

B - Connection TV3/TV4 (green) from aerial amplifier -R24- (TV3/TV4) up to model year 2006

- Connection TV3/TV4 (green) from aerial amplifier -R24- (TV2/TV1) from model year 2007 onwards

C - Multi-pin connector, 20-pin, red (T20f)

D - MOST bus

E - FBAS output (green) to control unit for front display and information control panel -J523- / reversing camera system control unit -J772-

Note

Contacts which are not listed are not used.

Protected by copyright. Copying for private or commercial purposes, in part or in whole, is not permitted unless authorised by AUDI AG. AUDI AG does not guarantee or accept any liability with respect to the correctness of information in this document. Copyright by AUDI AG.

C - Multi-pin connector, 20-pin, red (T20f)

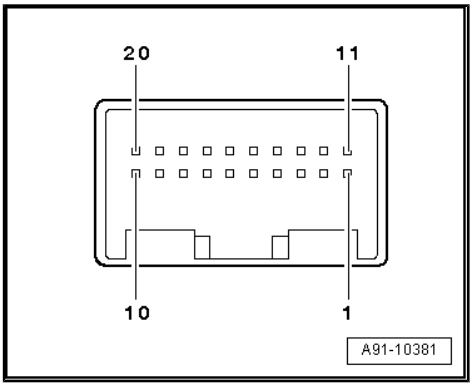

1 - Terminal 30

2 - Terminal 31

3 - Open circuit diagnostic lead

4 - Screen earth

5 - Video output to multimedia system control unit -J650- (RSE)

6 - Screen earth (audio)

7 - Audio output (left-side) to multimedia system control unit -J650- (RSE)

8 - Audio output (right-side) to multimedia system control unit -J650- (RSE)

9 - Screen earth (audio)

10 - Audio input (left-side) 1 from multimedia system control unit -J650- (RSE)

11 - Audio input (right-side) 1 from multimedia system control unit -J650- (RSE)

12 - Video input 1 from multimedia system control unit -J650- (RSE)

13 - Screen earth (video)

14 - Screen earth (not used)

15 - Screen earth (not used)

16 - Audio input (left-side) 2 (not used)

17 - Audio input (right-side) 2 (not used)

18 - Video input (not used)

19 - Screen earth (not used)

20 - I/O switch PIN from multimedia system control unit -J650- (RSE)

Protected by copyright. Copying for private or commercial purposes, in part or in whole, is not permitted unless authorised by AUDI AG. AUDI AG does not guarantee or accept any liability with respect to the correctness of information in this document. Copyright by AUDI AG.

D - MOST bus

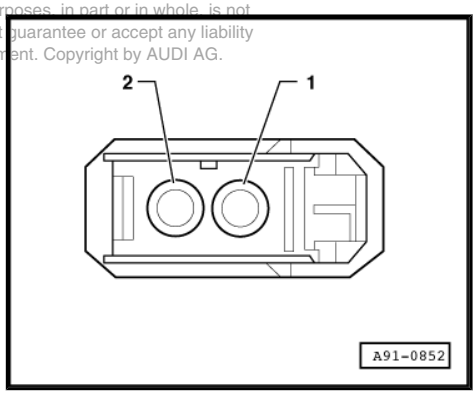

1 - Input

2 - Output

11.8 Connectors on TV tuner -R78- (from week 36/08 onwards)

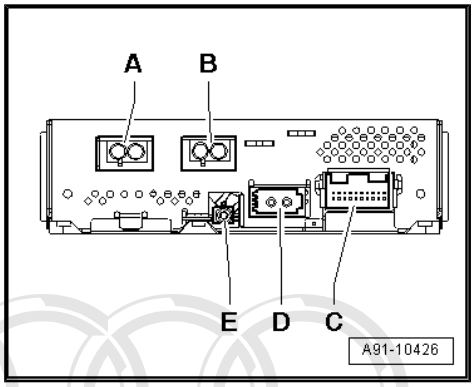

TV tuner -R78-

A - Connection TV1/TV2 (brown) from aerial amplifier -R24-

B - Connection TV3 (green) from aerial amplifier -R24-

C - Multi-pin connector, 20-pin, red (T20f)

D - MOST bus

E - FBAS output (green) to control unit 1 for information electronics -J794-

Note

Contacts which are not listed are not used.

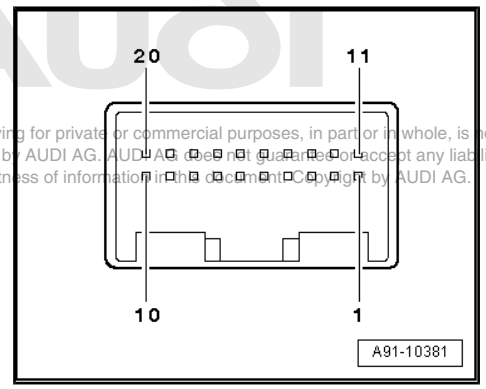

C - Multi-pin connector, 20-pin, red (T20f)

1 - Terminal 30
2 - Terminal 31
3 - Open circuit diagnostic lead
4 - Screen earth
5 - Video out (RSE)
6 - Screen earth
7 - Audio out L (RSE)
8 - Audio out R (RSE)
9 - Screen earth
10 - Audio in L
11 - Audio in R
12 - Video in
13 - Screen earth
14 - Screen earth
15 - Screen earth
16 - Audio in L
17 - Audio in R
18 - Video in
19 - Screen earth
20 - ID PIN

Protected by copyright. Copying for private or commercial purposes, in part or in whole, is not permitted unless authorised by AUDI AG. AUDI AG does not guarantee or accept any liability with respect to the correctness of information in this document. Copyright by AUDI AG.

D - MOST bus

1 - Input

2 - Output

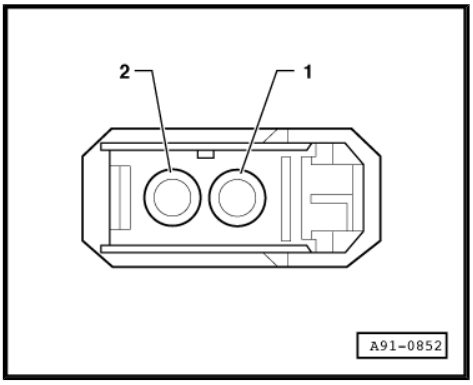

11.9 Connectors on DVD player -R7-

DVD player -R7-

1 - FBAS output, rear right (not used)

2 - FBAS output, rear left (not used)

3 - FBAS input (green) from TV tuner -R78- / reversing camera system control unit -J772-

4 - FBAS output (green) to control unit for front display and information control panel -J523-

5 - Multi-pin connector, 8-pin, black

6 - MOST bus

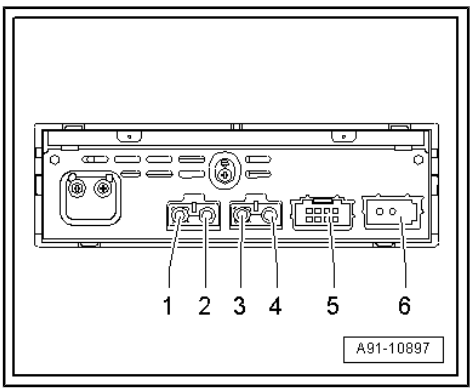

Note

Contacts which are not listed are not used.

Protected by copyright. Copying for private or commercial purposes, in part or in whole, is not permitted unless authorised by AUDI AG. AUDI AG does not guarantee or accept any liability with respect to the correctness of information in this document. Copyright by AUDI AG.

5 - Multi-pin connector, 8-pin, black

1 - Terminal 31

2 - Terminal 30

5 - Open circuit diagnostic lead

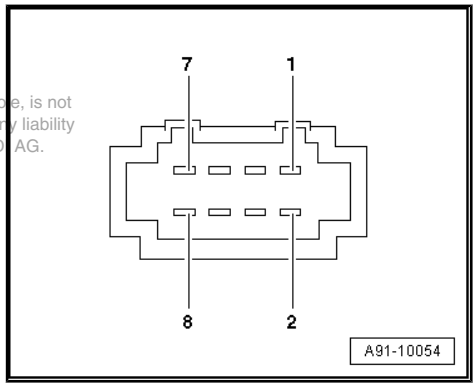

6 - MOST bus

1 - Input

2 - Output

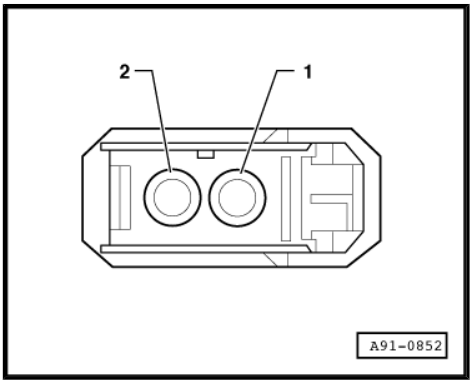

11.10 Overview of fitting locations (up to week 35/08)

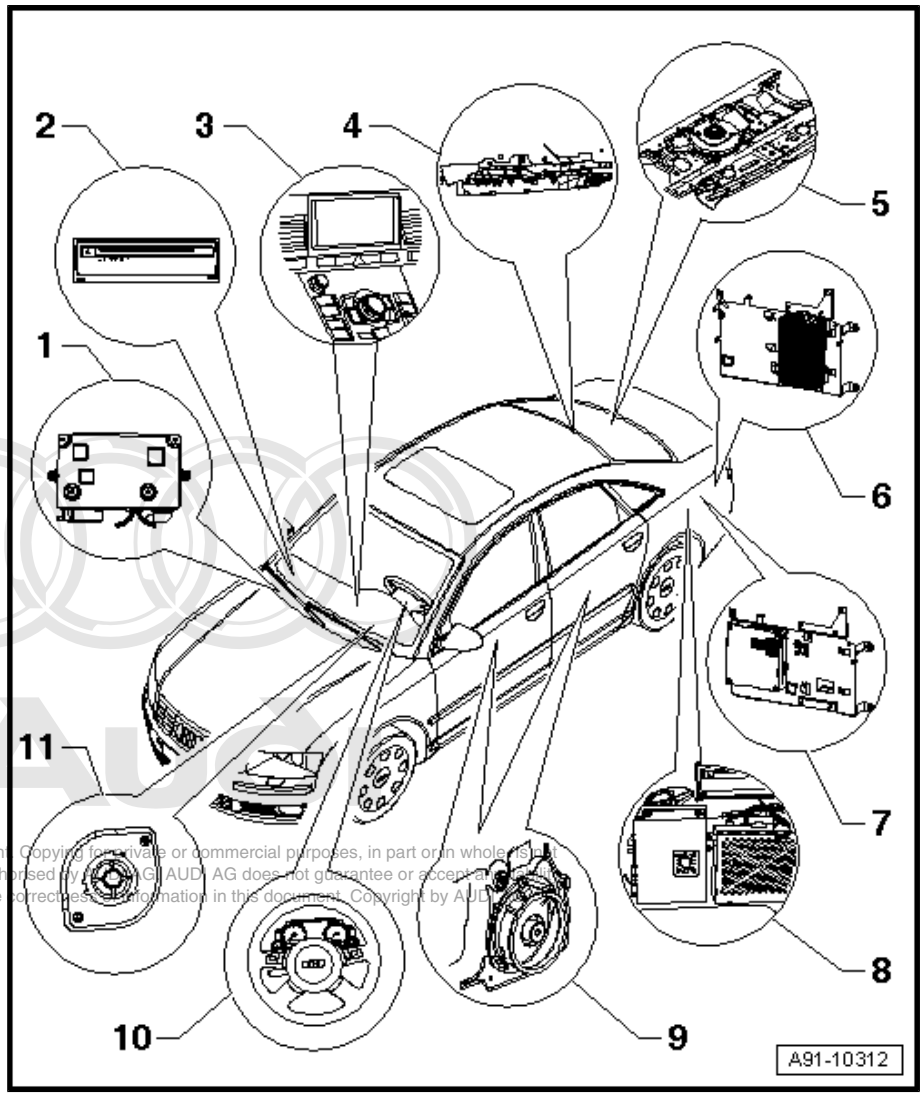

1 - Control unit for front display and information control panel -J523-

- ❑ Behind glove box

2 - Media player in position 1 -R118- / media player in position 2 -R119-

- ❑ In glove box

DVD player -R7-

- ❑ Pin assignment ⇒ page 227
- ❑ Removing and installing ⇒ page 238

3 - Display unit for front information display and operating unit control unit -J685-

- ❑ In dash panel (centre)

- Multimedia system operating unit -E380-

- ❑ In centre console (bottom)

4 - Aerial amplifier -R24-

- ❑ Behind roof end trim (left-side)
- ❑ Overview ⇒ page 85

5 - Loudspeakers in rear shelf

6 - Digital sound package control unit -J525-

- ❑ Behind luggage compartment side trim (left-side)

7 - TV tuner -R78-

- ❑ Analogue (up to model year 2005)
- ❑ Analogue/digital (from model year 2006 onwards)
- ❑ Behind luggage compartment side trim (left-side)
- ❑ Pin assignment (analogue) ⇒ page 221
- ❑ Pin assignment (up to week 35/08) ⇒ page 224
- ❑ Removing and installing ⇒ page 229

8 - Digital TV tuner -R171- (up to MY 05)

- ❑ Behind luggage compartment side trim (left-side)
- ❑ Pin assignment ⇒ page 223
- ❑ Removing and installing ⇒ page 233

9 - Loudspeakers in doors

10 - Multi-function steering wheel

- ❑ Removing and installing buttons ⇒ page 255

11 - Loudspeakers in dash panel

Protected by copyright. Copying for private or commercial purposes, in part or in whole, is not permitted unless authorised by AUDI AG. AUDI AG does not guarantee or accept any liability with respect to the correctness of information in this document. Copyright by AUDI AG.

11.11 Overview of fitting locations (from week 36/08 onwards)

1 - Control unit 1 for information electronics -J794-

- In glove box
- Pin assignment (from week 36/08 onwards) ⇒ page 11
- Removing and installing (from week 36/08 onwards) ⇒ page 21

2 - Display unit for front information display and operating unit control unit -J685-

- In dash panel (centre)

- Multimedia system operating unit -E380-

- In centre console (bottom)

3 - Aerial amplifier -R24-

- Behind roof end trim
- Overview ⇒ page 85

4 - Loudspeakers in rear shelf

5 - TV tuner -R78-

- Behind luggage compartment side trim (left-side)
- Pin assignment (from week 36/08 onwards) ⇒ page 226
- Removing and installing (from model year 2006 onwards) ⇒ page 231

6 - Loudspeakers in doors

7 - Multi-function steering wheel

- Removing and installing buttons ⇒ page 255

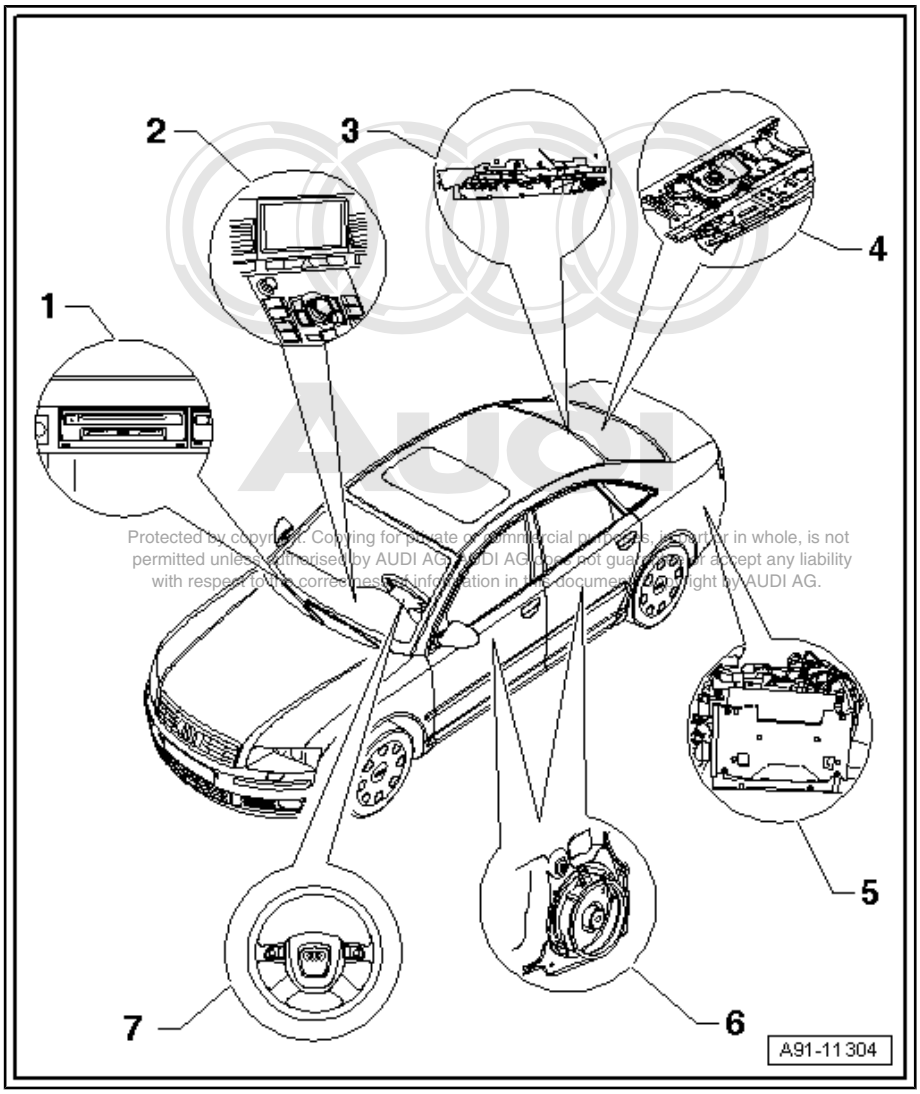

Protected by copyright. Copying for private or commercial purposes, in part or in whole, is not permitted unless authorised by AUDI AG. AUDI AG does not guarantee or accept any liability with respect to the correctness of information in this document. Copyright by AUDI AG.

11.12 Removing and installing TV tuner -R78- (analogue/hybrid)

11.12.1 Removing and installing (up to model year 2005/RSE)

Special tools and workshop equipment required

♦ Repair set for fibre optic cables -VAS 6223-

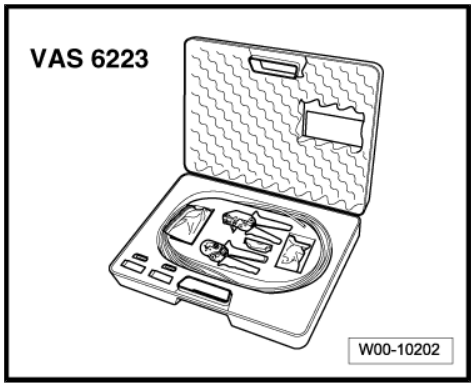

♦ Protective cap for cable connector -VAS 6223/9-

Vehicles with RSE:

Protected by copyright. Copying for private or commercial purposes, in part or in whole, is not permitted unless authorised by AUDI AG. AUDI AG does not guarantee or accept any liability with respect to the correctness of information in this document. Copyright by AUDI AG.

A modified TV tuner -R78- (analogue) is fitted on vehicles with RSE. This tuner has an additional identification plate.

Contact the “quattro GmbH” prior to renewal.

All vehicles

– When renewing control unit, select “Replacement” function for appropriate control unit in “Guided Fault Finding”.

To do so, use the vehicle diagnostic, testing and information system -VAS 5051- .

– Switch off all electrical equipment.

– Remove ignition key.

Removing

– Remove luggage compartment side trim (left-side) ⇒ General body repairs, interior; Rep. Gr. 70 .

– Detach parking aid control unit -J446- ⇒ Electrical system; Rep. Gr. 94 .

– Unplug all electrical connectors at control units.

– Fit protective cap for cable connector -VAS 6223/9- -1- onto MOST bus connector -2-.

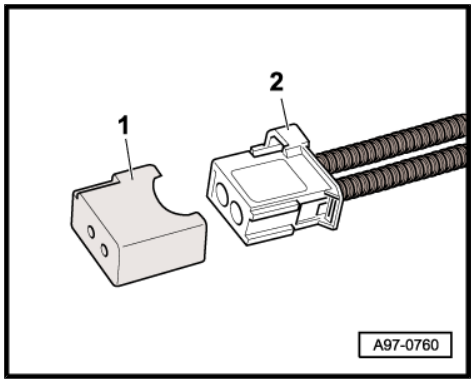

On vehicles with digital radio -R147- and digital TV tuner -R171- :

– Start by removing digital TV tuner -R171- ⇒ page 236 .

All vehicles

– Unfasten nuts -arrows- (6 Nm) and remove fuse holder -1-.

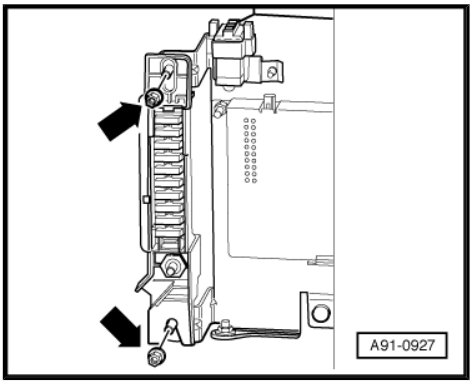

– Unscrew nuts -arrows- (8 Nm) at attaching points of retaining plate -3-.
– Unplug all connectors at digital sound package control unit -J525- -1- and TV tuner -R78- -2-.

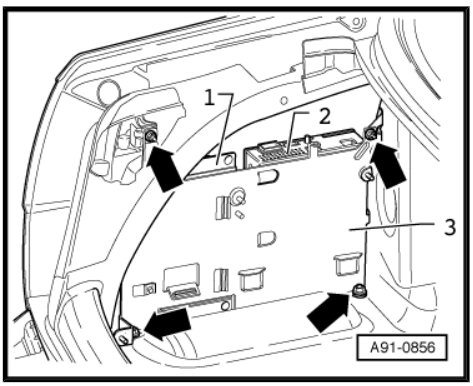

– Fit protective cap for cable connector -VAS 6223/9- -1- onto MOST bus connector -2-.
– Pull out retaining plate -3- to right.
– Remove the digital sound package control unit -J525- ⇒ page 99 .

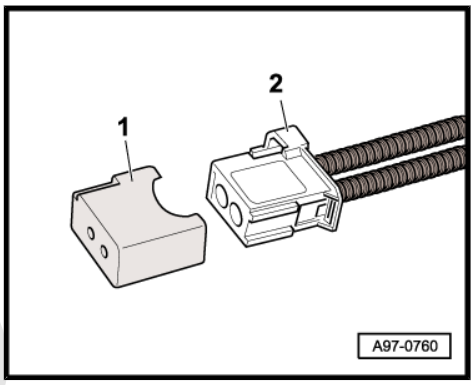

– Unscrew bolts -arrows- (3 Nm) on reverse side of retaining plate -2- on TV tuner -R78- -1-.
– Remove the TV tuner -R78- -1- from the retaining plate -2-.

Installing

– Installation is performed in reverse sequence.

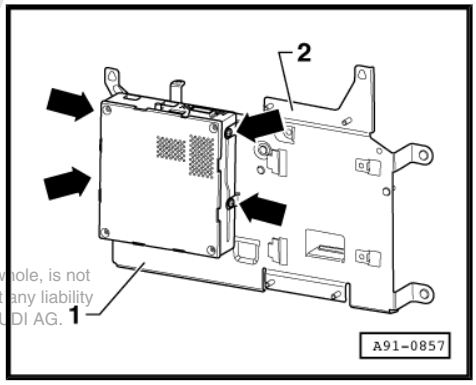

Protected by copyright. Copying for private or commercial purposes, in part or in whole, is not permitted unless authorised by AUDI AG. AUDI AG does not guarantee or accept any liability with respect to the correctness of information in this document. Copyright by AUDI AG.

11.12.2 Removing and installing (from model year 2006 onwards)

Special tools and workshop equipment required

♦ Repair set for fibre optic cables -VAS 6223-

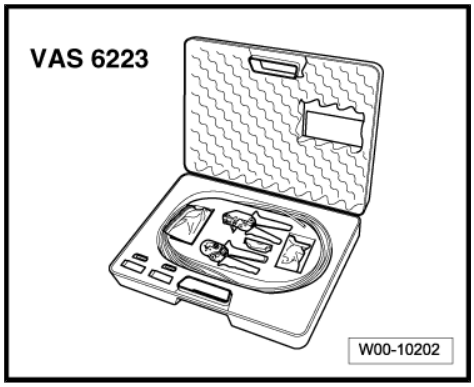

♦ Protective cap for cable connector -VAS 6223/9-

– When renewing control unit, select “Replacement” function for appropriate control unit in “Guided Fault Finding”.

To do so, use the vehicle diagnostic, testing and information system -VAS 5051- .

– Switch off all electrical equipment.

– Remove ignition key.

Removing

– Open left-side luggage compartment storage area.

– Unfasten nuts -arrows- (6 Nm) and remove fuse holder -1-.

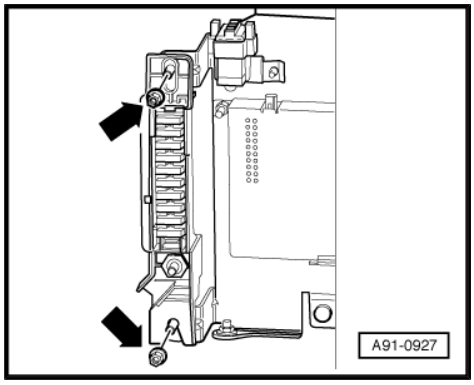

– Unscrew bolt -4- and nuts -2- and -3- (3 Nm).

– Unplug all electrical connectors at control units.

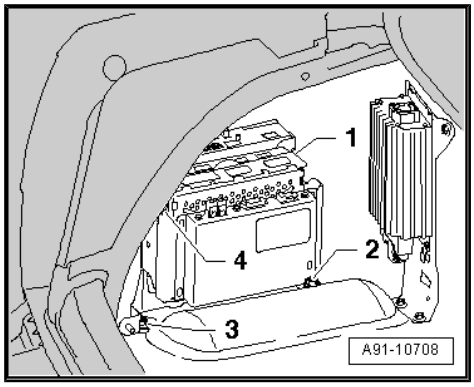

Protected by copyright. Copying for private or commercial purposes, in part or in whole, is not permitted unless authorised by AUDI AG. AUDI AG does not guarantee or accept any liability with respect to the correctness of information in this document. Copyright by AUDI AG.

– Fit protective cap for cable connector -VAS 6223/9- -1- onto MOST bus connector -2-.

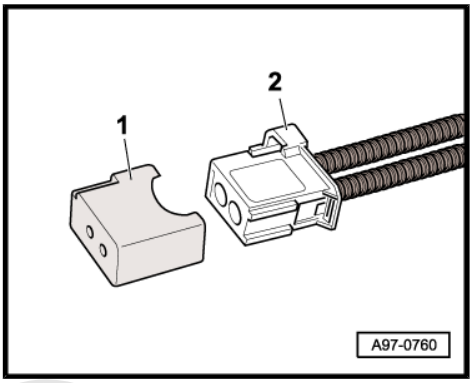

– Take out bracket -1- with control units.

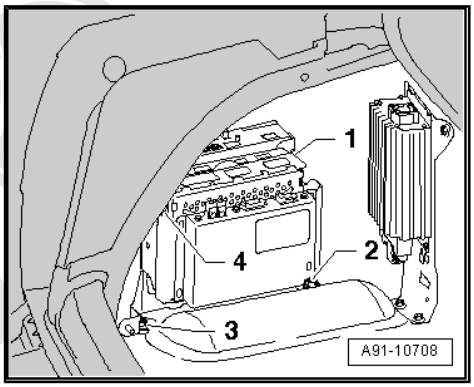

Protected by copyright. Copying for private or commercial purposes, in part or in whole, is not
permitted unless authorized by AUDI AG. AUDI AG does not guarantee or accept any liability
with respect to the correctness of information in this document. Copyright by AUDI AG.

– Unscrew bolts -arrows- (3 Nm) and detach TV tuner -R78- -2- from bracket -1-.

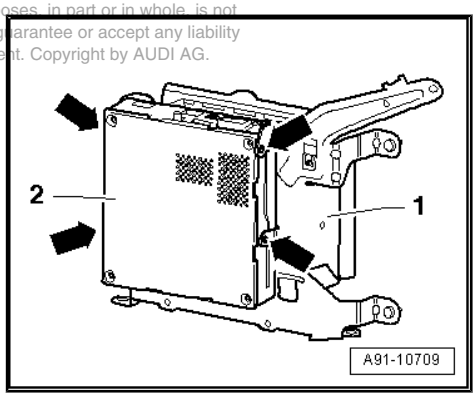

Installing

– Installation is performed in reverse sequence.

11.13 Removing and installing digital TV tuner -R171-

11.13.1 Vehicles without digital radio -R147-

– Switch off all electrical equipment.

– Remove ignition key.

Removing

– Open left-side luggage compartment storage area.

– Unplug connectors -2- and -3- on digital TV tuner -R171- -1-.
– Unscrew nuts -arrows- (3 Nm).
– Remove the digital TV tuner -R171- -1- from the retaining plate.

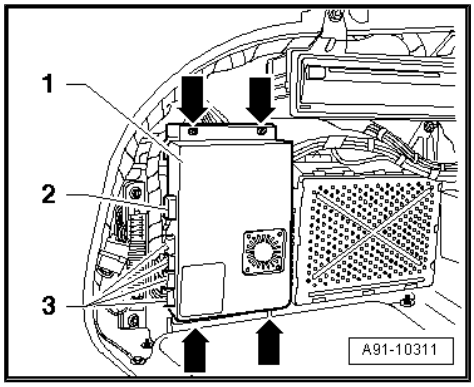

Installing

– Installation is performed in reverse sequence.

Initialising the remote control

– Switch on ignition.

Protected by copyright. Copying for private or commercial purposes, in part or in whole, is not permitted unless authorised by AUDI AG. AUDI AG does not guarantee or accept any liability with respect to the correctness of information in this document. Copyright by AUDI AG.

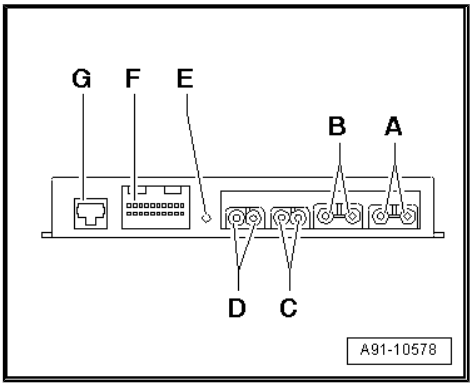

– Press the button -E- on the digital TV tuner -R171- .

To do so, use a 2.5 mm hexagon key .

– Simultaneously (or at least within 1 second) press MENU button on remote control.

– Switch to “TV” at the multimedia system operating unit -E380- .

“TV” should appear on the display unit for front information display and operating unit control unit -J685- .

– Check whether analogue TV reception is available.

Please note that analogue TV reception may vary according to your current location.

– Switch to “External AV source” at the multimedia system operating unit -E380- .

“External AV source” should appear on the display unit for front information display and operating unit control unit -J685- .

– Connect vehicle diagnostic, testing and information system -VAS 5051- .

– Switch on ignition.

– Touch “Self-diagnosis” key on tester display.

Address word: “57 - TV tuner”

– Touch “57 TV tuner” key on tester display.

Note

The digital TV tuner -R171- does not have a self-diagnosis function; only a limited diagnosis of the aerial and video connections is available via the factory-fitted TV tuner -R78- .

Reading measured value block

– Select diagnosis function “Read measured value block” from list.

– Enter desired 3-digit display group number on keypad and confirm entry by touching Q key.

Protected by copyright. Copying for private or commercial purposes, in part or in whole, is not permitted unless authorised by AUDI AG. AUDI AG does not guarantee or accept any liability with respect to the correctness of information in this document. Copyright by AUDI AG.

Display group number: 009

If the wires for voltage supply and aerials have been properly fitted, the display zones should show “Yes” in the first zone and “NO” in the second zone.

Read measured value block 9 →	▾ Indicated on display
YES No	
	External input AV 2
	External input AV 1

– If the display is not as shown, check the wiring and repeat diagnosis.

– Terminate diagnosis.

Testing remote control

After the remote control has been successfully initialised, the operating screen for the digital TV tuner -R171- will appear in the display unit for front information display and operating unit control unit -J685- (“External AV source” must be activated).

– Check to see if the operating screen for the digital TV tuner -R171- can be operated with the remote control.

11.13.2 Vehicles with digital radio -R147-

– Switch off all electrical equipment.

– Remove ignition key.

Removing

– Open left-side luggage compartment storage area.

– If fitted, remove the navigation system with CD drive control unit -J401- ⇒ page 201 .

Protected by copyright. Copying for private or commercial purposes, in part or in whole, is not permitted unless authorised by AUDI AG. AUDI AG does not guarantee or accept any liability with respect to the correctness of information in this document. Copyright by AUDI AG.

– Unscrew nuts -1-, -2- and -3- (8 Nm).

– Swivel frame -4- with digital TV tuner -R171- out of left storage compartment.

– Unplug the connectors on digital TV tuner -R171- .

– Remove frame with digital TV tuner -R171- from luggage compartment.

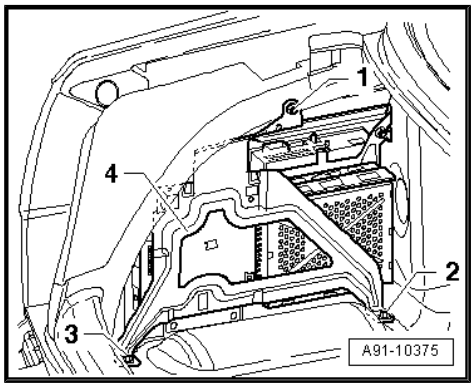

– Unscrew bolts -1- (3 Nm) on reverse side of frame.

The digital TV tuner -R171- is secured at the bottom of the frame with a clip -arrow-.

– Remove the digital TV tuner -R171- -2- from the frame.

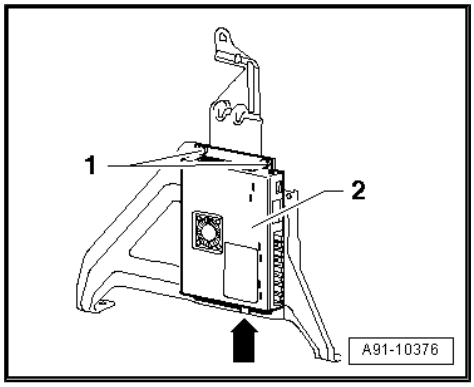

Installing

– Installation is performed in reverse sequence.

Initialising the remote control

– Switch on ignition.

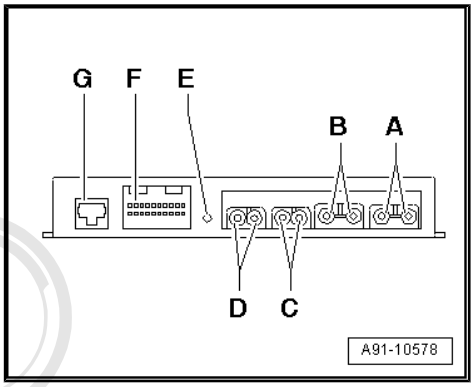

– Press the button -E- on the digital TV tuner -R171- .

To do so, use a 2.5 mm hexagon key .

– Simultaneously (or at least within 1 second) press MENU button on remote control.

– Switch to “TV” at the multimedia system operating unit -E380- .

“TV” should appear on the display unit for front information display and operating unit control unit -J685- .

– Check whether analogue TV reception is available.

Please note that analogue TV reception may vary according to your current location.

– Switch to “External AV source” at the multimedia system operating unit -E380- .

“External AV source” should appear on the display unit for front information display and operating unit control unit -J685- .

– Connect vehicle diagnostic, testing and information system - VAS 5051- .

– Switch on ignition.

Protected by copyright. Copying for private or commercial purposes, in part or in whole, is not permitted unless authorised by AUDI AG. AUDI AG does not guarantee or accept any liability with respect to the correctness of information in this document. Copyright by AUDI AG.

– Touch “Self-diagnosis” key on tester display.

Address word: “57 - TV tuner”

– Touch “57 TV tuner” key on tester display.

Note

The digital TV tuner -R171- does not have a self-diagnosis function; only a limited diagnosis of the aerial and video connections is available via the factory-fitted TV tuner -R78- .

Reading measured value block

– Select diagnosis function “Read measured value block” from list.

– Enter desired 3-digit display group number on keypad and confirm entry by touching Q key.

Display group number: 009

If the wires for voltage supply and aerials have been properly fitted, the display zones should show “Yes” in the first zone and “NO” in the second zone.

Read measured value block 9 →	▾ Indicated on display
YES No	
	External input AV 2
	External input AV 1

– If the display is not as shown, check the wiring and repeat diagnosis.

– Terminate diagnosis.

Testing remote control

After the remote control has been successfully initialised, the operating screen for the digital TV tuner -R171- will appear in the display unit for front information display and operating unit control unit -J685- (“External AV source” must be activated).

– Check to see if the operating screen for the digital TV tuner -R171- can be operated with the remote control.

11.14 Removing and installing DVD player -R7-

Special tools and workshop equipment required

♦ Radio release tool -T10057-

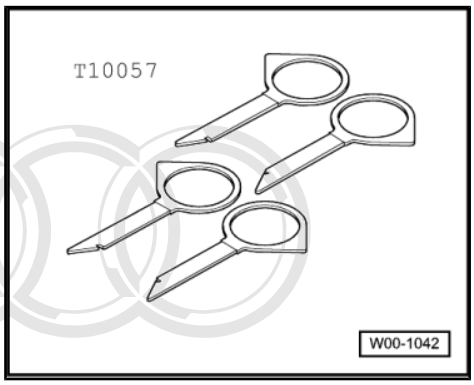

♦ Repair set for fibre optic cables -VAS 6223-

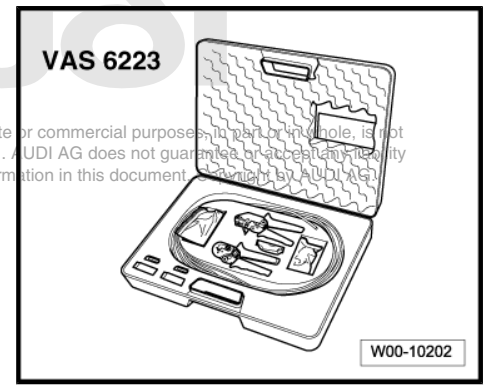

Protected by copyright. Copying for private or commercial purposes, in part or in whole, is not permitted unless authorised by AUDI AG. AUDI AG does not guarantee or accept any liability with respect to the correctness of information in this document. Copyright by AUDI AG.

♦ Protective cap for cable connector -VAS 6223/9-

– Switch off all electrical equipment.

– Remove ignition key.

Removing

– Open glove box.

– Insert two radio release tools -T10057- into slots on DVD player -R7- until they engage. Pointed ends of grips must face outwards.

– Pull DVD player -R7- out of mounting frame.

– Unplug all connectors at DVD player -R7- .

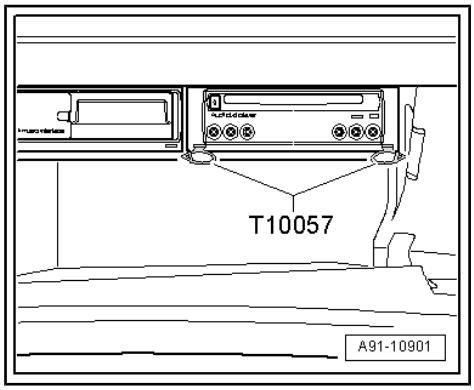

– Fit protective cap for cable connector -VAS 6223/9- -1- onto MOST bus connector -2-.
– Pull out radio release tool -T10057- by pressing retaining tabs on DVD player -R7- .

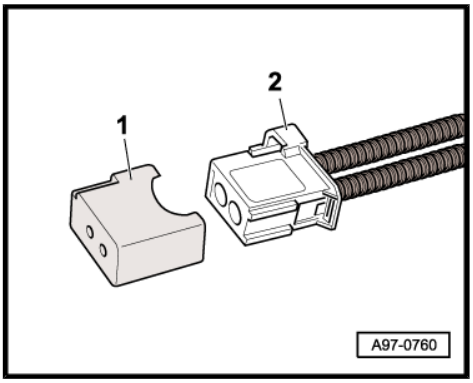

Installing

– Plug in all connectors.
– Slide DVD player -R7- into mounting frame until it engages.

Protected by copyright. Copying for private or commercial purposes, in part or in whole, is not permitted unless authorised by AUDI AG. AUDI AG does not guarantee or accept any liability with respect to the correctness of information in this document. Copyright by AUDI AG.

12 TV system (Japan)

12.1 General notes

The TV system is part of the MMI Infotainment system.

The TV tuner -R78- is connected to the other components of the Infotainment system via the MOST Bus. The multimedia system operating unit -E380- is used for operation.

The signals from the rear window aerials reach the TV tuner -R78- via the aerial amplifier -R24- .

The TV tuner -R78- can be used for receiving analogue (up to model year 2007) and digital TV channels (from model year 2008 onwards).

A TV card reader -R204- is connected to the TV tuner -R78- for receiving pay-TV channels (from model year 2008 onwards).

From week 22/09 onwards a DVD drive is fitted in the control unit 1 for information electronics -J794- which can be used to play DVDs.

Protected by copyright. Copying for private or commercial purposes, in part or in whole, is not permitted unless authorised by AUDI AG. AUDI AG does not guarantee or accept any liability with respect to the correctness of information in this document. Copyright by AUDI AG.

Fault finding on the TV tuner -R78- is performed via the “Guided Fault Finding” ⇒ Vehicle diagnosis, testing and information system VAS 5051.

Repairing aerial wiring ⇒ Electrical system; Rep. Gr. 97 .

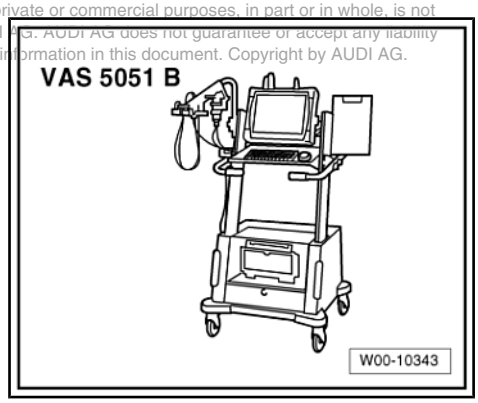

12.2 TV system, MMI (up to week 21/09) - layout

1 - Display unit for front information display and operating unit control unit -J685- in dash panel (centre)

2 - Control unit for front display and information control panel -J523- behind glove box

3 - Multimedia system operating unit -E380- in centre console (bottom)

4 - Data bus diagnostic interface -J533- behind glove box

5 - Media player in position 1 -R118- / media player in position 2 -R119- in glove box

6 - TV card reader -R204- behind luggage compartment side trim (left-side) (from model year 2008 onwards)

7 - TV tuner -R78- behind luggage compartment side trim (left-side)

8 - Aerial amplifier -R24- behind roof end trim (left-side)

9 - Rear window aerials

10 - Digital sound package control unit -J525- behind luggage compartment side trim (left-side)

11 - Sound systems

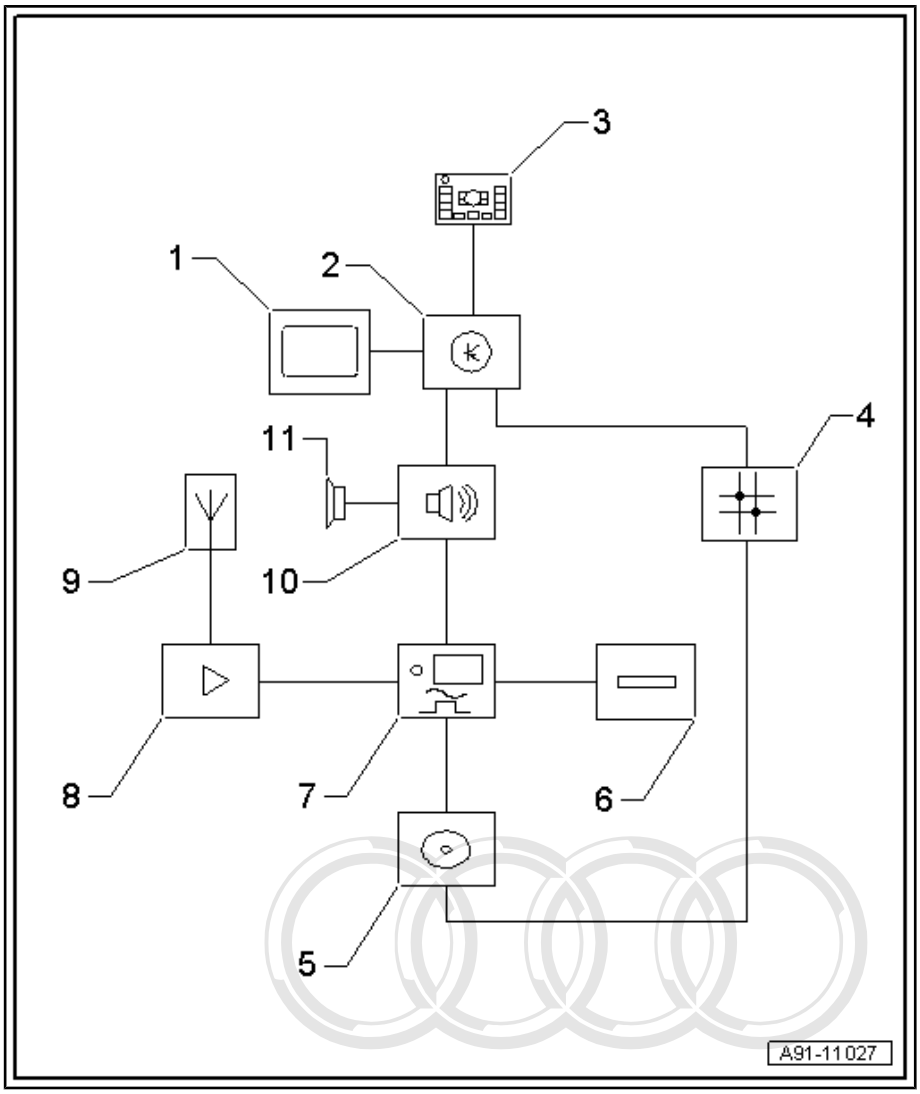

Protected by copyright. Copying for private or commercial purposes, in part or in whole, is not permitted unless authorised by AUDI AG. AUDI AG does not guarantee or accept any liability with respect to the correctness of information in this document. Copyright by AUDI AG.

12.3 TV system, MMI (from week 22/09 onwards) - layout

1 - Display unit for front information display and operating unit control unit -J685- in dash panel (centre)

2 - Control unit 1 for information electronics -J794- in glove box (left-side)

3 - Multimedia system operating unit -E380- in centre console (bottom)

4 - Data bus diagnostic interface -J533- behind glove box

5 - Digital sound package control unit -J525- behind luggage compartment side trim (left-side)

6 - TV card reader -R204- behind luggage compartment side trim (left-side)

7 - TV tuner -R78- behind luggage compartment side trim (left-side)

8 - Aerial amplifier -R24- behind roof end trim (left-side)

9 - Rear window aerials

10 - CD changer -R41- in glove box (right-side)

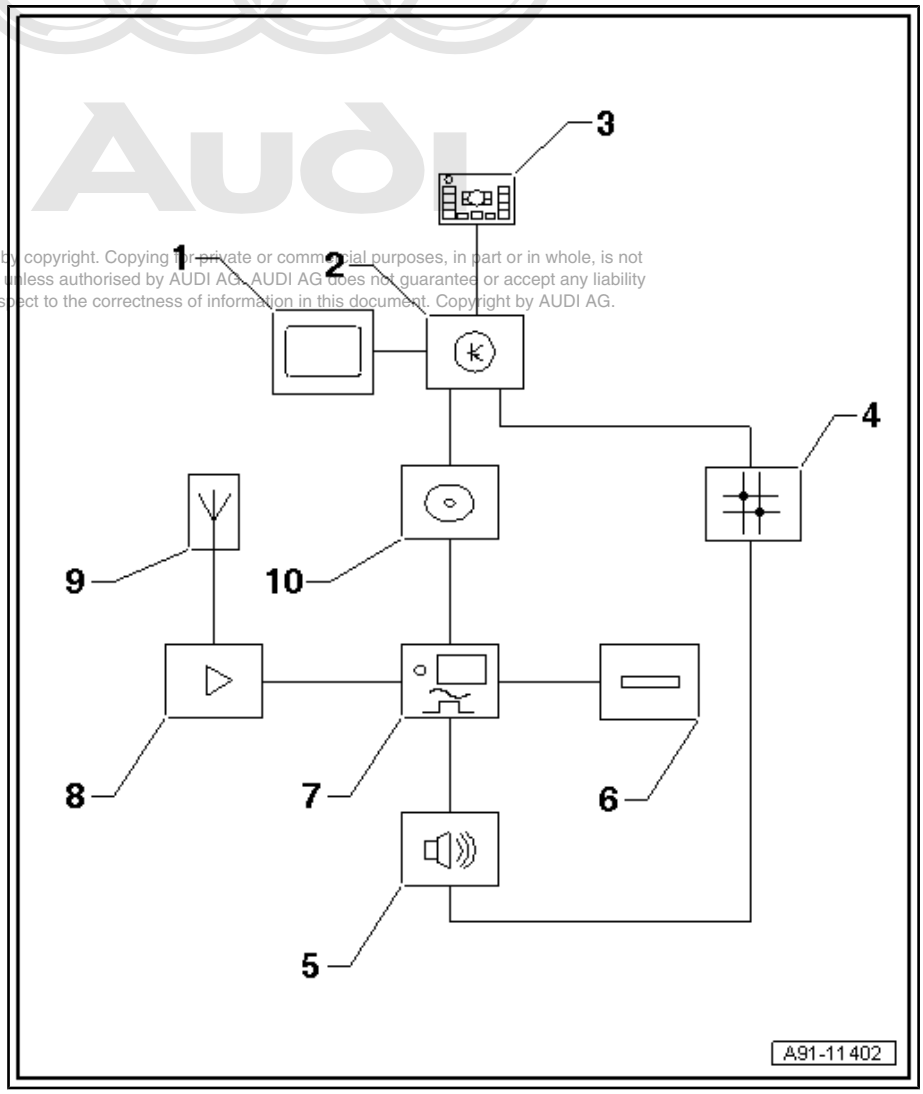

Protected by copyright. Copying for private or commercial purposes, in part or in whole, is not permitted unless authorised by AUDI AG. AUDI AG does not guarantee or accept any liability with respect to the correctness of information in this document. Copyright by AUDI AG.

12.4 Connectors on TV tuner -R78- (up to week 21/09)

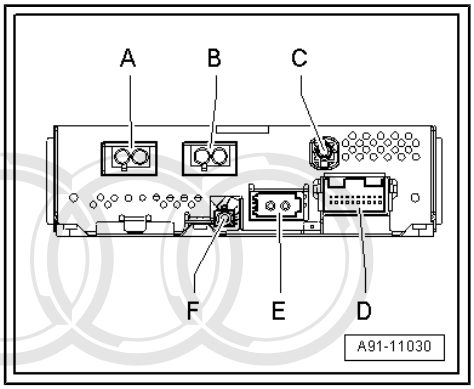

TV tuner -R78-

A - Connection TV1/TV2 (brown) from aerial amplifier -R24-

B - Connection TV3 (green) from aerial amplifier -R24-

C - Connection TV card reader -R204- (from model year 2008 onwards)

D - Multi-pin connector, 20-pin, red (T20f)

E - MOST bus

F - FBAS output (green) to control unit for front display and information control panel -J523- / reversing camera system control unit -J772-

Note

Contacts which are not listed are not used.

Protected by copyright. Copying for private or commercial purposes, in part or in whole, is not permitted unless authorised by AUDI AG. AUDI AG does not guarantee or accept any liability with respect to the correctness of information in this document. Copyright by AUDI AG.

D - Multi-pin connector, 20-pin, red (T20f)

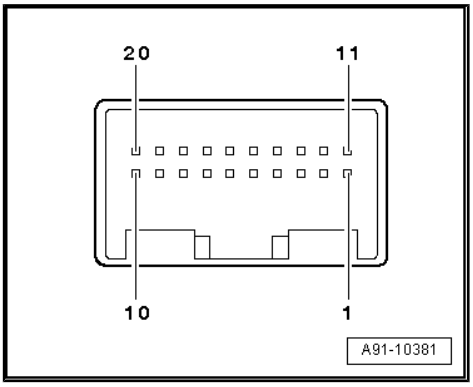

1 - Terminal 30
2 - Terminal 31
3 - Open circuit diagnostic lead
4 - Screen earth
5 - Video output (RSE)
6 - Screen earth (audio)
7 - Audio output L (RSE)
8 - Audio output R (RSE)
9 - Screen earth
10 - Audio input L
11 - Audio input R
12 - Video input
13 - Screen earth
14 - Screen earth
15 - Screen earth
16 - Audio input L
17 - Audio input R
18 - Video input
19 - Screen earth
20 - I/D PIN

E - MOST bus

1 - Input

2 - Output

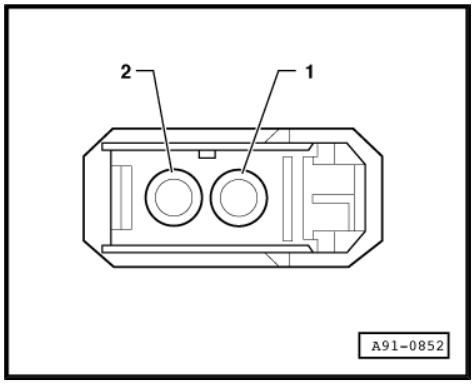

12.5 Connectors on TV tuner -R78- (from week 22/09 onwards)

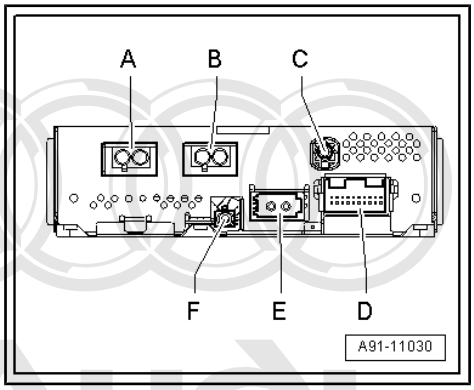

TV tuner -R78-

A - Connection TV1/TV2 (brown) from aerial amplifier -R24-

B - Connection TV3 (green) from aerial amplifier -R24-

C - Connection TV card reader -R204-

D - Multi-pin connector, 20-pin, red (T20f)

E - MOST bus

F - FBAS output (green) to control unit 1 for information electronics -J794-

Note

Contacts which are not listed are not used.

Protected by copyright. Copying for private or commercial purposes, in part or in whole, is not permitted unless authorised by AUDI AG. AUDI AG does not guarantee or accept any liability with respect to the correctness of information in this document. Copyright by AUDI AG.

D - Multi-pin connector, 20-pin, red (T20f)

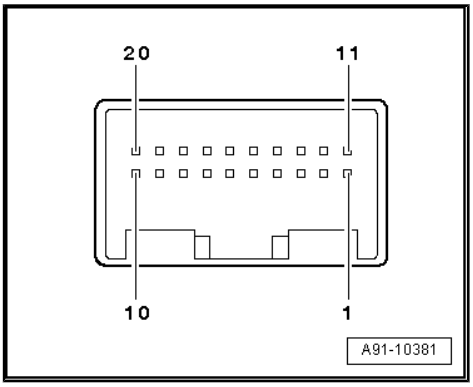

1 - Terminal 30
2 - Terminal 31
3 - Open circuit diagnostic lead
4 - Screen earth
5 - Video output (RSE)
6 - Screen earth (audio)
7 - Audio output L (RSE)
8 - Audio output R (RSE)
9 - Screen earth
10 - Audio input L
11 - Audio input R
12 - Video input
13 - Screen earth
14 - Screen earth
15 - Screen earth
16 - Audio input L
17 - Audio input R
18 - Video input
19 - Screen earth
20 - I/D PIN

Protected by copyright. Copying for private or commercial purposes, in part or in whole, is not permitted unless authorised by AUDI AG. AUDI AG does not guarantee or accept any liability with respect to the correctness of information in this document. Copyright by AUDI AG.

E - MOST bus

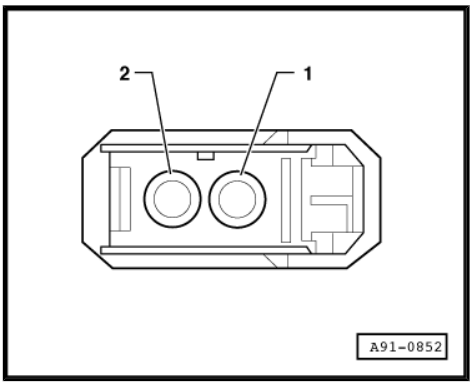

1 - Input
2 - Output

12.6 Overview of fitting locations (up to week 21/09)

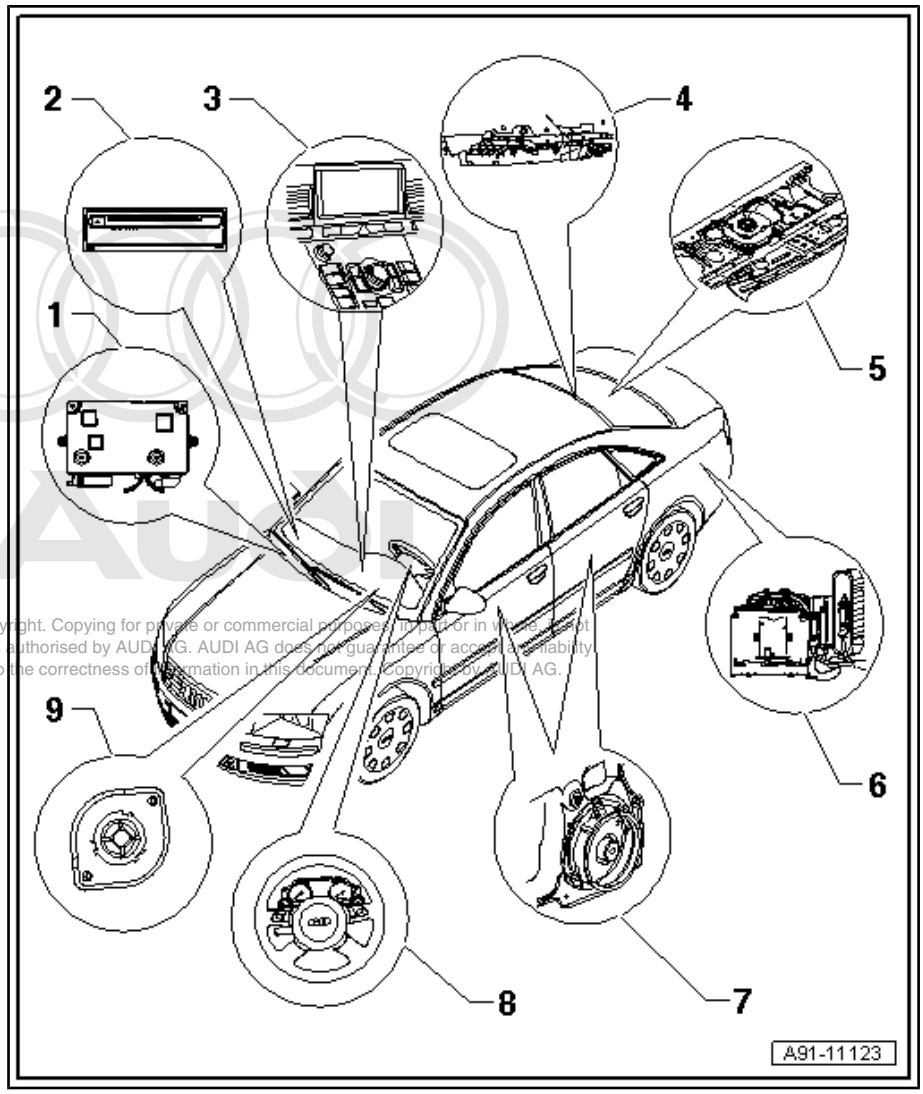

1 - Control unit for front display and information control panel -J523-

- ❑ Behind glove box

2 - Media player in position 1 -R118- / media player in position 2 -R119-

- ❑ In glove box

3 - Display unit for front information display and operating unit control unit -J685-

- ❑ In dash panel (centre)

4 - Aerial amplifier -R24-

- ❑ Behind roof end trim (left-side)
- ❑ Overview ⇒ page 85

5 - Loudspeaker in rear shelf -R150-

6 - Digital sound package control unit -J525-

- ❑ Behind luggage compartment side trim (left-side)

- TV tuner -R78-

- ❑ Behind luggage compartment side trim (left-side)
- ❑ Pin assignment (up to week 21/09) ⇒ page 243
- ❑ Removing and installing (from model year 2006 onwards) ⇒ page 231

- TV card reader -R204-

- ❑ Behind luggage compartment side trim (left-side)
- ❑ Removing and installing ⇒ page 247

7 - Loudspeakers in doors

8 - Multi-function steering wheel

- ❑ Removing and installing buttons ⇒ page 255

9 - Loudspeakers in dash panel

Protected by copyright. Copying for private or commercial purposes, in part or in whole, is not permitted unless authorised by AUDI AG. AUDI AG does not guarantee or accept any liability with respect to the correctness of information in this document. Copyright by AUDI AG.

12.7 Overview of fitting locations (from week 22/09 onwards)

1 - Control unit 1 for information electronics -J794-

- In glove box
- Pin assignment (from week 22/09 onwards) ⇒ page 53
- Removing and installing (from week 36/08 onwards) ⇒ page 21

2 - Display unit for front information display and operating unit control unit -J685-

- In dash panel (centre)

- Multimedia system operating unit -E380-

- In centre console (bottom)

3 - Aerial amplifier -R24-

- Behind roof end trim
- Overview ⇒ page 85

4 - Loudspeakers in rear shelf

5 - TV tuner -R78-

- Behind luggage compartment side trim (left-side)
- Pin assignment (from week 22/09 onwards) ⇒ page 244
- Removing and installing (from model year 2006 onwards) ⇒ page 231

- TV card reader -R204-

- Behind luggage compartment side trim (left-side)
- Removing and installing ⇒ page 247

6 - Loudspeakers in doors

7 - Multi-function steering wheel

- Removing and installing buttons ⇒ page 255

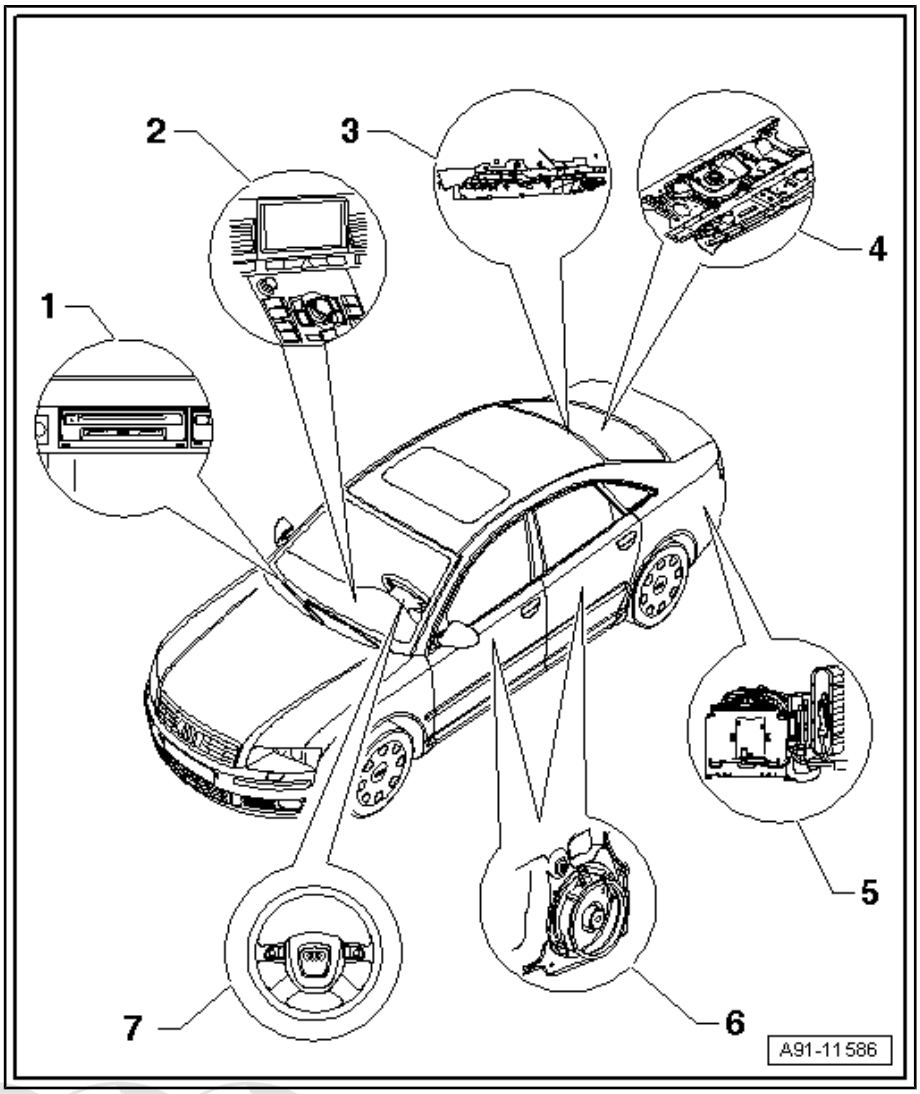

12.8 Removing and installing TV card reader -R204-

– Switch off all electrical equipment.

– Remove ignition key.

Protected by copyright. Copying for private or commercial purposes, in part or in whole, is not permitted unless authorised by AUDI AG. AUDI AG does not guarantee or accept any liability with respect to the correctness of information in this document. Copyright by AUDI AG.

Removing

– Open left-side luggage compartment storage area.

– Unplug connector -3- on TV card reader -R204- -2-.
– Unscrew nuts -arrows- (2 Nm).
– Detach TV card reader -R204- -2- from retainer -1-.

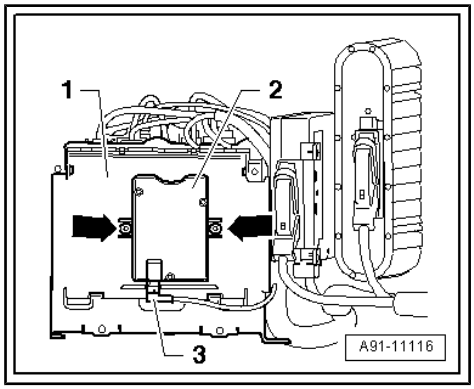

Installing

– Installation is performed in reverse sequence.

Protected by copyright. Copying for private or commercial purposes, in part or in whole, is not permitted unless authorised by AUDI AG. AUDI AG does not guarantee or accept any liability with respect to the correctness of information in this document. Copyright by AUDI AG.

13 TV system (China)

13.1 General notes

The TV system is part of the MMI Infotainment system.

The TV tuner -R78- is connected to the other components of the Infotainment system via the MOST Bus. The multimedia system operating unit -E380- is used for operation.

The signals from the rear window aerials reach the TV tuner -R78- via the aerial amplifier -R24- .

The TV tuner -R78- can be used for receiving analogue and digital TV channels.

Fault finding on the TV tuner -R78- is performed via the “Guided Fault Finding” ⇒ Vehicle diagnosis, testing and information system VAS 5051.

Repairing aerial wiring ⇒ Electrical system; Rep. Gr. 97 .

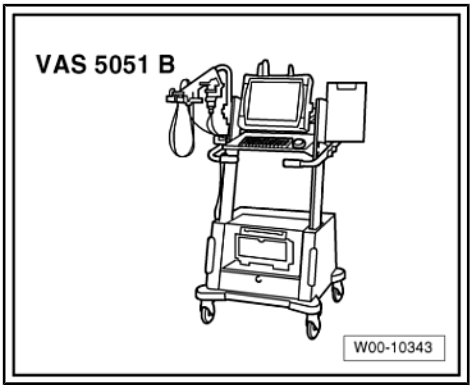

Protected by copyright. Copying for private or commercial purposes, in part or in whole, is not permitted unless authorised by AUDI AG. AUDI AG does not guarantee or accept any liability with respect to the correctness of information in this document. Copyright by AUDI AG.

13.2 TV system, MMI - layout

1 - Display unit for front information display and operating unit control unit -J685- in dash panel (centre)

2 - Control unit for front display and information control panel -J523- behind glove box

3 - Multimedia system operating unit -E380- in centre console (bottom)

4 - Data bus diagnostic interface -J533- behind glove box

5 - Media player in position 1 -R118- / media player in position 2 -R119- in glove box

6 - TV tuner -R78- behind luggage compartment side trim (left-side)

7 - Aerial amplifier -R24- behind roof end trim (left-side)

8 - Rear window aerials

9 - Digital sound package control unit -J525- behind luggage compartment side trim (left-side)

10 - Sound systems

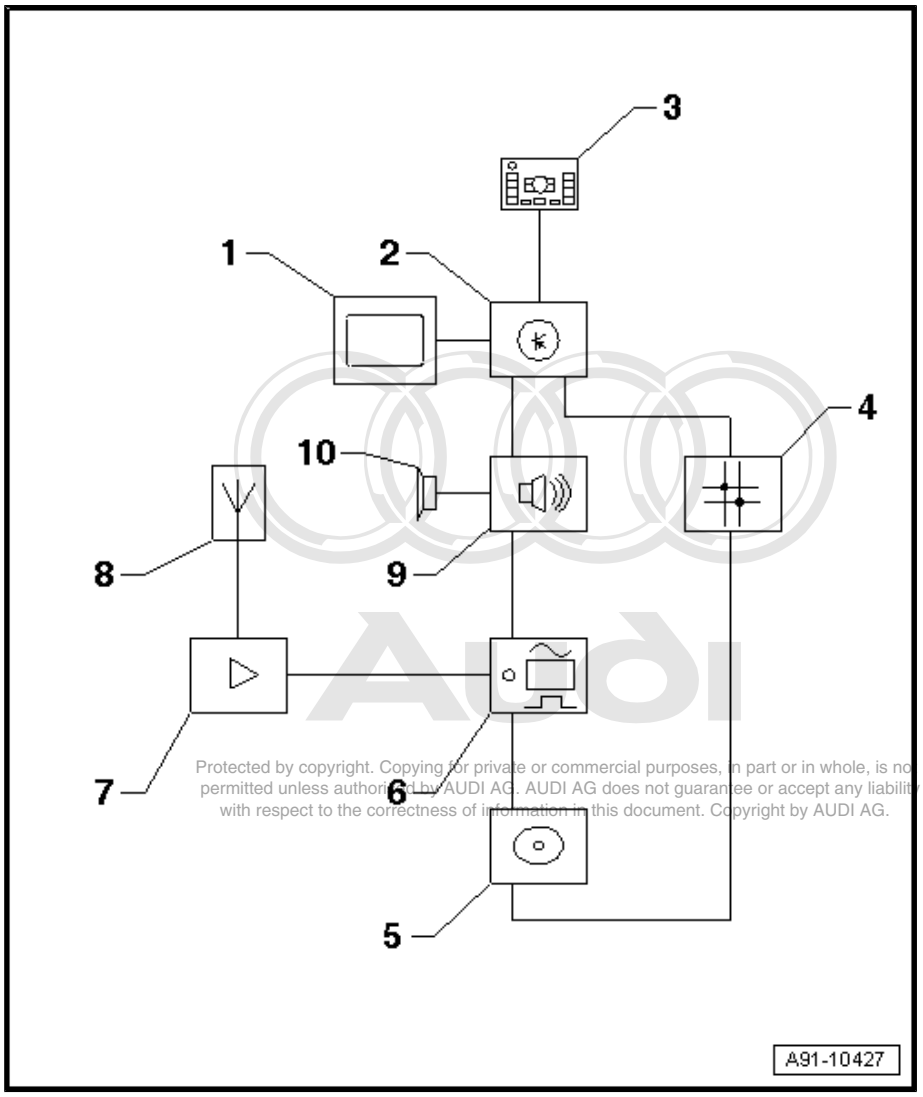

Protected by copyright. Copying for private or commercial purposes, in part or in whole, is not permitted unless authorised by AUDI AG. AUDI AG does not guarantee or accept any liability with respect to the correctness of information in this document. Copyright by AUDI AG.

13.3 Connectors on TV tuner -R78-

TV tuner -R78-

A - Connection TV1/TV2 (brown) from aerial amplifier -R24-

B - Connection TV3 (green) from aerial amplifier -R24-

C - Multi-pin connector, 20-pin, red (T20f)

D - MOST bus

E - FBAS output (green) to control unit for front display and information control panel -J523- / reversing camera system control unit -J772-

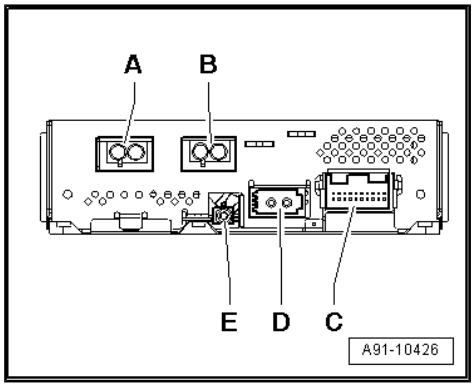

Note

Contacts which are not listed are not used.

C - Multi-pin connector, 20-pin, red (T20f)

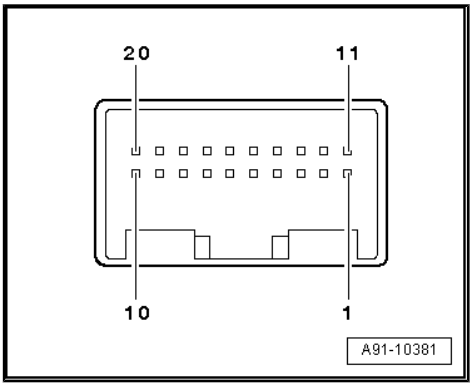

1 - Terminal 30
2 - Terminal 31
3 - Open circuit diagnostic lead
4 - Screen earth
5 - Video out (RSE)
6 - Screen earth
7 - Audio out L (RSE)
8 - Audio out R (RSE)
9 - Screen earth
10 - Audio in L
11 - Audio in R
12 - Video in
13 - Screen earth
14 - Screen earth
15 - Screen earth
16 - Audio in L
17 - Audio in R
18 - Video in
19 - Screen earth
20 - ID PIN

D - MOST bus

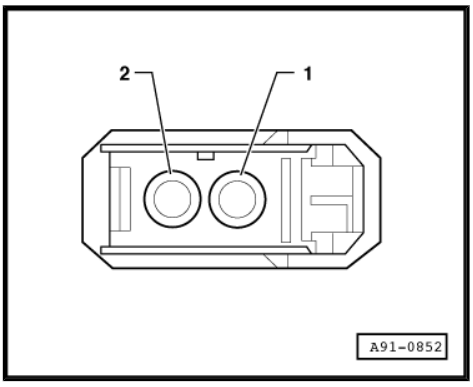

1 - Input
2 - Output

Protected by copyright. Copying for private or commercial purposes, in part or in whole, is not permitted unless authorised by AUDI AG. AUDI AG does not guarantee or accept any liability with respect to the correctness of information in this document. Copyright by AUDI AG.

13.4 Overview of fitting locations

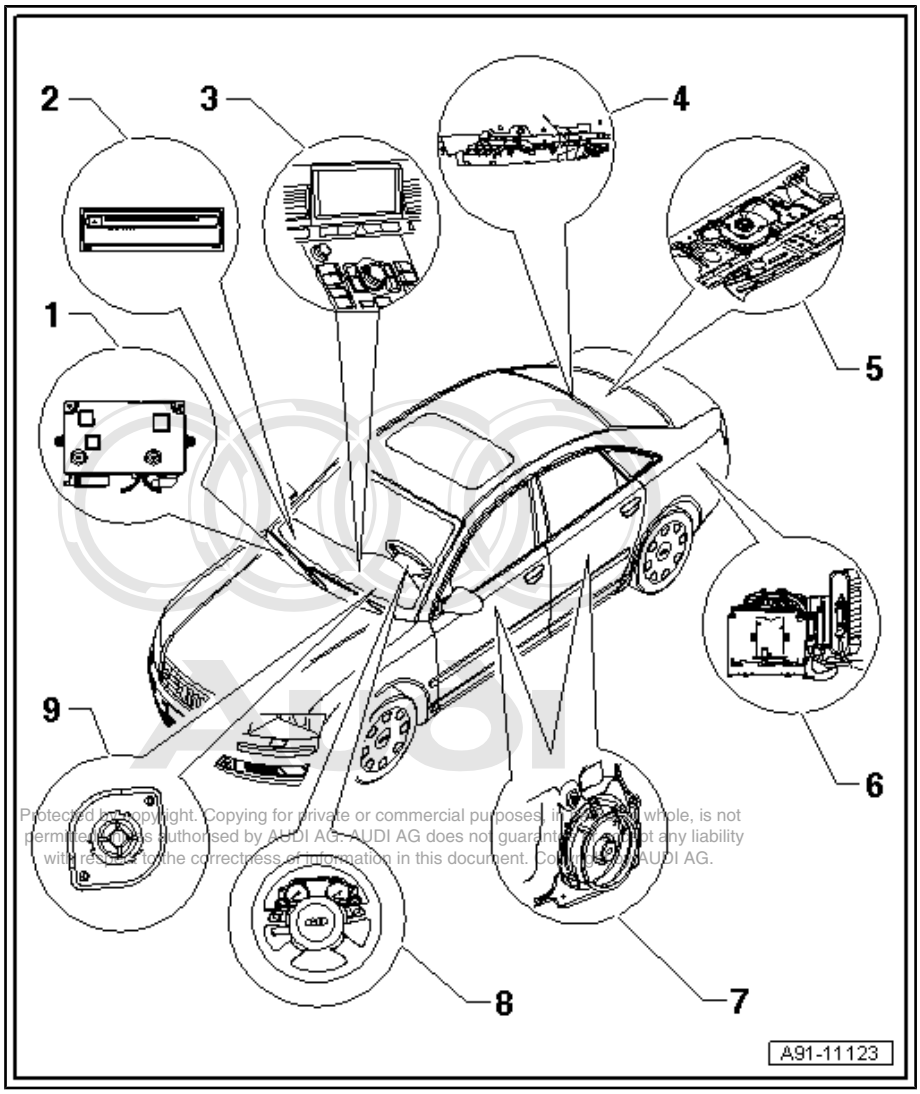

1 - Control unit for front display and information control panel -J523-

- ❑ Behind glove box

2 - Media player in position 1 -R118- / media player in position 2 -R119-

- ❑ In glove box

3 - Display unit for front information display and operating unit control unit -J685-

- ❑ In dash panel (centre)

4 - Aerial amplifier -R24-

- ❑ Behind roof end trim (left-side)
- ❑ Overview ⇒ page 85

5 - Loudspeaker in rear shelf -R150-

- ❑ Only with BOSE

6 - Digital sound package control unit -J525-

- ❑ Behind luggage compartment side trim (left-side)

- TV tuner -R78-

- ❑ Behind luggage compartment side trim (left-side)
- ❑ Pin assignment ⇒ page 250
- ❑ Removing and installing (from model year 2006 onwards) ⇒ page 231

7 - Loudspeakers in doors

8 - Multi-function steering wheel

- ❑ Removing and installing buttons ⇒ page 255

9 - Loudspeakers in dash panel

Protected by copyright. Copying for private or commercial purposes, in part or in whole, is not permitted unless authorised by AUDI AG. AUDI AG does not guarantee or accept any liability with respect to the correctness of information in this document. Copyright by AUDI AG.

14 Multi-function steering wheel

14.1 General notes

Buttons are integrated in the steering wheel in order to make the radio, telephone and navigation systems easier to use. On vehicles with tiptronic, rocker switches are also fitted on the right and left side of the steering wheel.

The multi-function steering wheel control unit -J453- (under the right-side button) reads out the button information and transfers it to the steering column electronics control unit -J527- via the LIN bus (single wire Bus). From the steering column electronics control unit -J527- the information is transferred to the individual components via the CAN Bus (convenience) and the data bus diagnostic interface -J533- .

The reproduction, distribution and utilization of this document as well as the communication of its contents to others without express authorization is prohibited. Offenders will be liable for damages. All rights reserved in the event of the grant of a patent, utility model or design. The reproduction, distribution and utilization of this document, in whole or in part, is not permitted unless authorized by AUDI AG. AUDI AG does not guarantee or accept any liability with respect to the correctness of information in this document. Copyright by AUDI AG.

Fault finding is performed via the “Guided Fault Finding” using ⇒ Vehicle diagnosis, testing and information system VAS 5051.

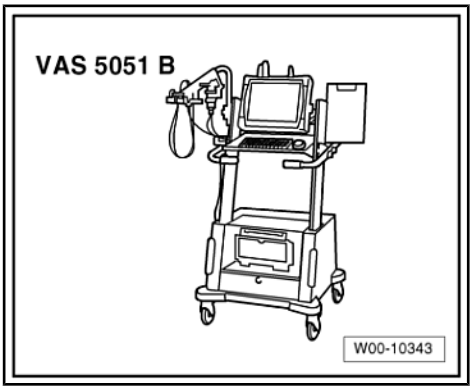

14.2 Multi-function steering wheel - layout

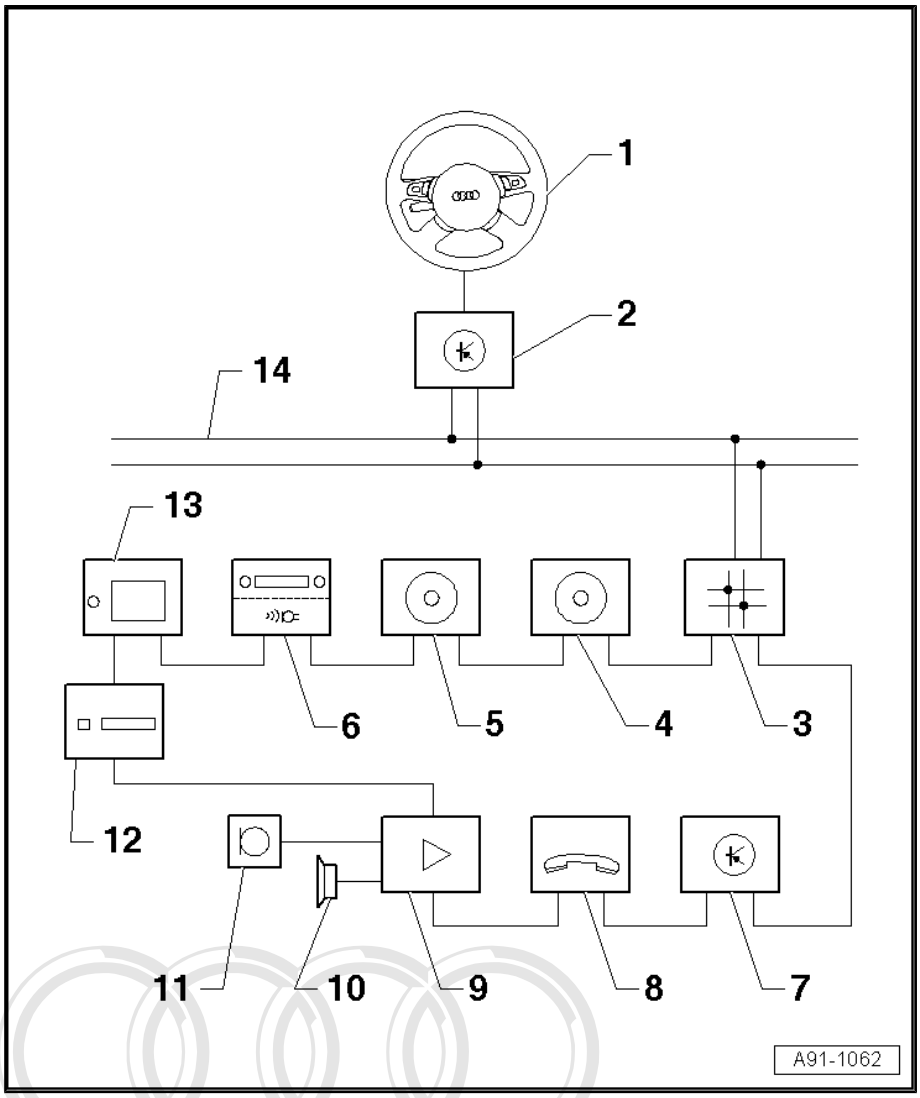

1 - Multi-function steering wheel

- ❑ With multi-function steering wheel control unit -J453- under right-side button
- ❑ Removing and installing multi-function buttons ⇒ page 255
- ❑ Removing and installing tiptronic buttons ⇒ page 255
- ❑ Removing and installing steering wheel heater button -E522- ⇒ page 256

2 - Steering column electronics control unit -J527-

- ❑ On steering column at steering column switch
- ❑ Pin assignment ⇒ Electrical system; Rep. Gr. 94
- ❑ Removing and installing ⇒ Electrical system; Rep. Gr. 94

3 - Data bus diagnostic interface -J533-

- ❑ Behind glove box

4 - Media player in position 1 - R118-

- ❑ In glove box

5 - Media player in position 2 - R119- (up to week 35/08)

- ❑ In glove box

6 - Radio -R-

- ❑ Behind luggage compartment side trim (left-side)
- ❑ With speech input control unit -J507- (up to week 35/08)

7 - Control unit for front display and information control panel -J523- (up to week 35/08)

- ❑ Behind glove box

- Control unit 1 for information electronics -J794- (from week 36/08 onwards)

- ❑ In glove box (left-side)

Protected by copyright. Copying or printed or electronic copy, in part or in whole, is not permitted unless authorised by AUDI AG. AUDI AG does not guarantee or accept any liability with respect to the correctness of information in this document. Copyright by AUDI AG.

8 - Telephone transmitter and receiver unit -R36- (up to week 35/08)

- ❑ In front of front left seat beneath floor covering

9 - Digital sound package control unit -J525-

- ❑ Behind luggage compartment side trim (left-side)

10 - Sound systems

11 - Microphone unit in front roof module -R164-

- ❑ Overview ⇒ page 16

12 - Navigation system with CD drive control unit -J401- (up to week 35/08)

- ❑ Behind luggage compartment side trim (left-side)

13 - TV tuner -R78-

- ❑ Behind luggage compartment side trim (left-side)

14 - CAN bus (convenience)

14.3 Removing and installing multi-function buttons

– Switch off all electrical equipment.

– Remove ignition key.

Removing

– Remove driver's airbag ⇒ General body repairs, interior; Rep. Gr. 69 .

– Pull trim ring off steering wheel.

Protected by copyright. Copying for private or commercial purposes, in part or in whole, is not permitted unless authorised by AUDI AG. AUDI AG does not guarantee or accept any liability with respect to the correctness of information in this document. Copyright by AUDI AG.

– Unplug connector -1- at button -2-.

– Push button -2- out of steering wheel in direction of -arrow-.

– Turn button over.

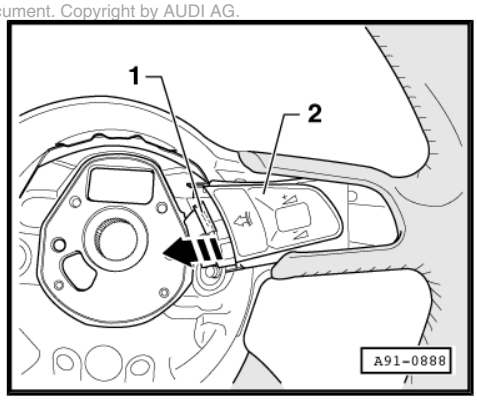

– Unplug connector -2- for tiptronic switch from multi-function button -1- and remove button.

Installing

– Installation is performed in reverse sequence.

Removal and installation procedures for the left-side multi-function button are the same.

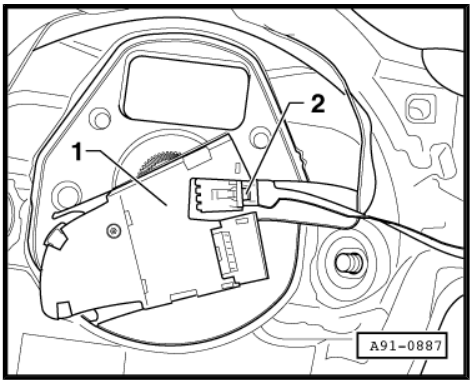

14.4 Removing and installing tiptronic buttons

– Switch off all electrical equipment.

– Remove ignition key.

Removing

– Remove driver's airbag ⇒ General body repairs, interior; Rep. Gr. 69 .

– Pull trim ring off steering wheel.

– Push multi-function button -2- out of steering wheel in direction of -arrow-.
– Turn button over.

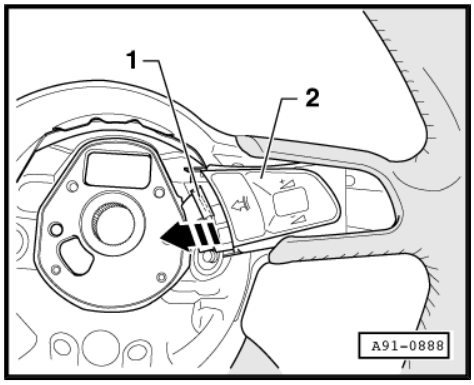

– Unplug connector -2- at multi-function button -1-.

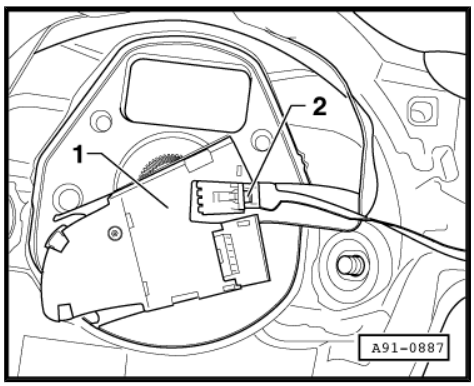

– Unscrew bolt -arrow- (3 Nm) and remove tiptronic button towards rear.

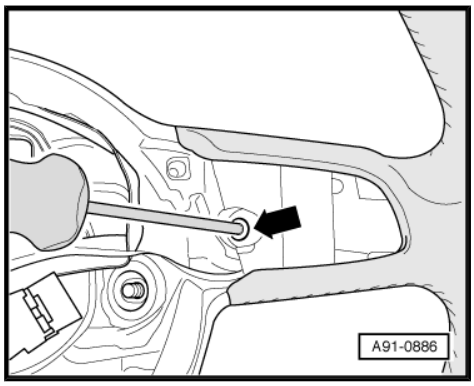

Installing

– Installation is performed in reverse sequence.

Removal and installation procedures for the left-side switch are the same.

14.5 Removing and installing steering wheel heater button -E522-

Special tools and workshop equipment required

♦ Removal wedge -3409-

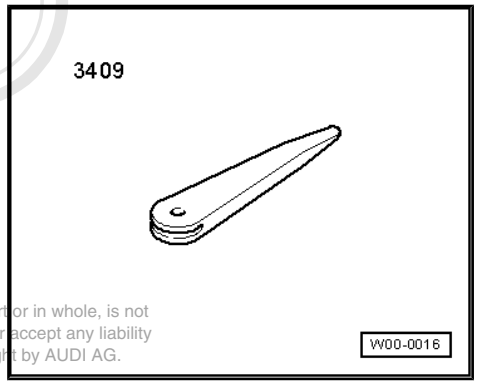

Protected by copyright. Copying for private or commercial purposes, in part or in whole, is not permitted unless authorised by AUDI AG. AUDI AG does not guarantee or accept any liability with respect to the correctness of information in this document. Copyright by AUDI AG.

– Switch off all electrical equipment.
– Remove ignition key.

Removing

– Remove driver's airbag ⇒ General body repairs, interior; Rep. Gr. 69 .

– Unplug connector -2- for steering wheel heater button -E522- -1-.

– Use removal wedge -3409- to unclip steering wheel heater button -E522- -1- from steering wheel.

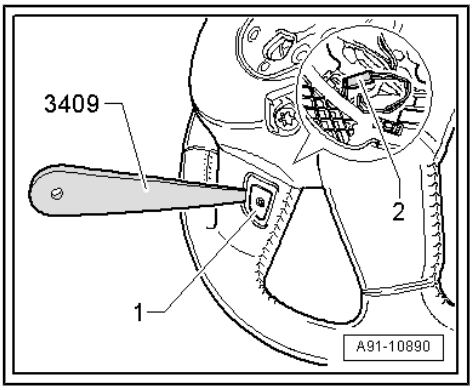

Installing

– Installation is performed in reverse sequence.

Protected by copyright. Copying for private or commercial purposes, in part or in whole, is not permitted unless authorised by AUDI AG. AUDI AG does not guarantee or accept any liability with respect to the correctness of information in this document. Copyright by AUDI AG.

15 Multi-function steering wheel (USA)

15.1 General notes

Buttons are integrated in the steering wheel in order to make the radio, telephone and navigation systems easier to use. On vehicles with tiptronic, rocker switches are also fitted on the right and left side of the steering wheel.

The multi-function steering wheel control unit -J453- (under the right-side button) reads out the button information and transfers it to the steering column electronics control unit -J527- via the LIN bus (single wire Bus). From the steering column electronics control unit -J527- the information is transferred to the individual components via the CAN Bus (convenience) and the data bus diagnostic interface -J533- .

Fault finding is performed via the “Guided Fault Finding” using ⇒ Vehicle diagnosis, testing and information system VAS 5051.

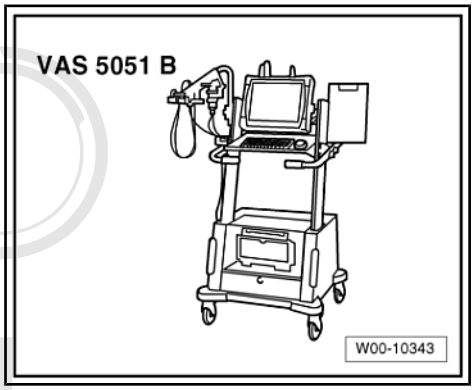

Protected by copyright. Copying for private or commercial purposes, in part or in whole, is not permitted unless authorised by AUDI AG. AUDI AG does not guarantee or accept any liability with respect to the correctness of information in this document. Copyright by AUDI AG.

15.2 Multi-function steering wheel - layout

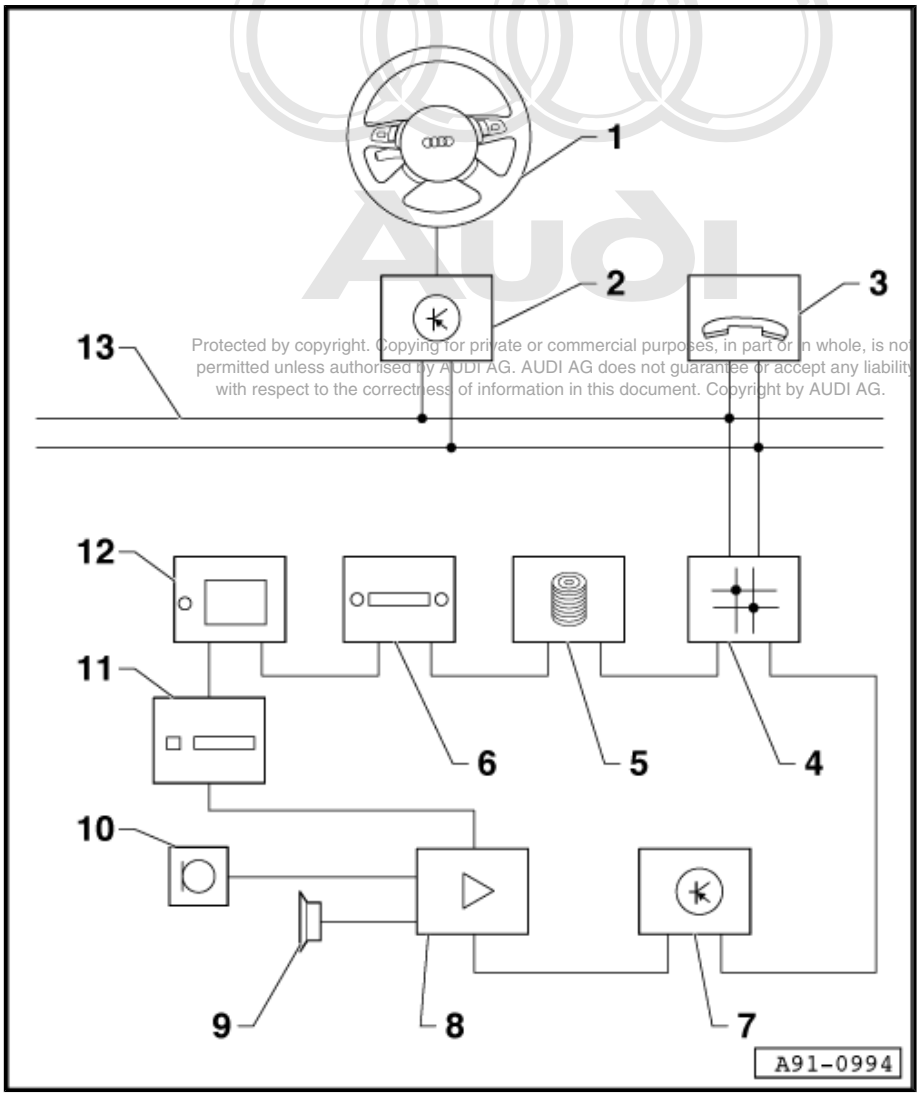

Protected by copyright. Copying for private or commercial purposes, in part or in whole, is not permitted unless authorised by AUDI AG. AUDI AG does not guarantee or accept any liability with respect to the correctness of information in this document. Copyright by AUDI AG.

1 - Multi-function steering wheel

- With multi-function steering wheel control unit -J453- under right-side button
- Removing and installing multi-function buttons ⇒ page 255
- Removing and installing tiptronic buttons ⇒ page 255
- Removing and installing steering wheel heater button -E522- ⇒ page 256

2 - Steering column electronics control unit -J527-

- On steering column at steering column switch
- Pin assignment ⇒ Electrical system; Rep. Gr. 94
- Removing and installing ⇒ Electrical system; Rep. Gr. 94

3 - Telephone/telematics control unit -J526-

- In front of front left seat beneath floor covering

4 - Data bus diagnostic interface -J533-

- Behind glove box

5 - Media player in position 1 -R118- / media player in position 2 -R119-

- In glove box

6 - Radio -R-

- Behind luggage compartment side trim (left-side)
- With speech input control unit -J507-

7 - Control unit for front display and information control panel -J523-

- Behind glove box

8 - Digital sound package control unit -J526-

- Behind luggage compartment side trim (left-side)

9 - Sound systems

10 - Microphone unit in front roof module -R164-

- Overview ⇒ page 39

11 - Navigation system with CD drive control unit -J401-

- Behind luggage compartment side trim (left-side)

12 - TV tuner -R78-

- Behind luggage compartment side trim (left-side)

13 - CAN bus (convenience)

Protected by copyright. Copying for private or commercial purposes, in part or in whole, is not permitted unless authorised by AUDI AG. AUDI AG does not guarantee or accept any liability with respect to the correctness of information in this document. Copyright by AUDI AG.

16 Telematics (USA)

16.1 General notes

The telephone and telematics control unit -J526- is linked to the communications system via the CAN Bus (convenience).

The system is operated using the telematics operating unit -E264- in the front interior light -W1- and the mobile telephone -R54- .

The telematics system combines traffic information, the service call and the emergency call functions.

The telephone and telematics control unit -J526- also always includes a phone pre-installation.

If necessary, an emergency call or breakdown call can be made via a telematics service centre. Up-to-date traffic information can also be obtained from the telematics service centre.

The telephone and telematics control unit -J526- determines the exact position of the vehicle using GPS data, which is then also transmitted to the telematics service centre.

An emergency call is made automatically if the airbag control unit -J234- triggers a crash signal.

Repairing aerial wiring ⇒ Electrical system; Rep. Gr. 97 .

Protected by copyright. Copying for private or commercial purposes, in part or in whole, is not permitted unless authorised by AUDI AG. AUDI AG does not guarantee or accept any liability with respect to the correctness of information in this document. Copyright by AUDI AG.

16.2 Telematics system - layout

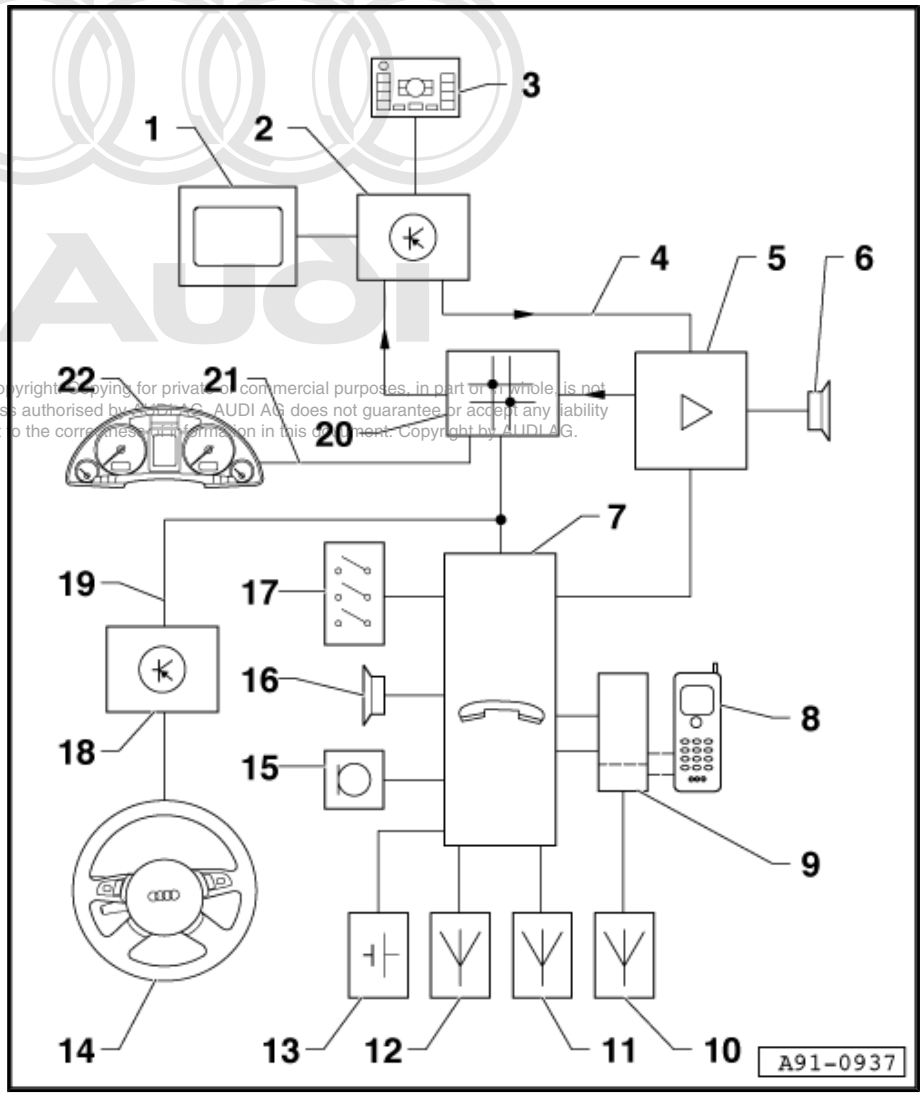

Copyright - Copying for private or commercial purposes, in part or in whole, is not permitted unless authorised by AUDI AG. AUDI AG does not guarantee or accept any liability with respect to the correctness of information in this document. Copyright by AUDI AG.

1 - Display unit for front information display and operating unit control unit -J685- in dash panel (centre)

2 - Control unit for front display and information control panel -J523- behind glove box

3 - Multimedia system operating unit -E380- in centre console (bottom)

4 - MOST bus

5 - Digital sound package control unit -J525- behind luggage compartment side trim (left-side)

6 - Sound systems

7 - Telephone and telematics control unit -J526- in front of front seat (left-side) beneath floor covering

8 - Mobile telephone -R54- in telephone bracket -R126-

9 - Telephone bracket -R126- in centre console/centre armrest

10 - Telephone aerial -R65- (GSM) behind roof end trim (right-side)

11 - Radio, telephone and navigation system aerial -R52- (Ter/Sat/GPS/additional GSM), roof aerial

12 - Radio, telephone and navigation system aerial -R52- (Ter/Sat/GPS/additional GSM), roof aerial

13 - Emergency battery, telematics -A16- on telephone and telematics control unit -J526-

14 - Multi-function steering wheel

15 - Microphone unit in front roof module -R164- (telephone microphone -R38-) in front interior light -W1-

16 - Additional loudspeaker for telematics -R91- in B-pillar trim (right-side)

17 - Telematics operating unit -E264- in front interior light -W1-

18 - Steering column electronics control unit -J527- on steering column on steering column switch

19 - CAN bus (convenience)

20 - Data bus diagnostic interface -J533- behind glove box

21 - CAN bus (instrument cluster)

22 - Control unit in dash panel insert -J285- (instrument cluster) in dash panel

16.3 Connectors on telephone/telematics control unit -J526-

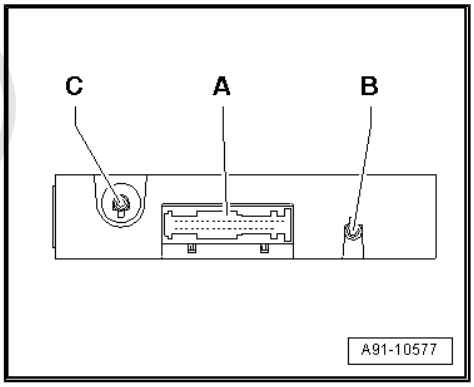

Telephone/telematics control unit -J526-

A - Multi-pin connector, 42-pin, blue (T42a)

B - GPS connection (blue) from radio, telephone and navigation system aerial -R52-

C - Additional GSM connection (purple) from radio, telephone and navigation system aerial -R52-

Note

Contacts which are not listed are not used.

Protected by copyright. Copying for private or commercial purposes, in part or in whole, is not permitted unless authorised by AUDI AG. AUDI AG does not guarantee or accept any liability with respect to the correctness of information in this document. Copyright by AUDI AG.

A - Multi-pin connector, 42-pin, blue (T42a)

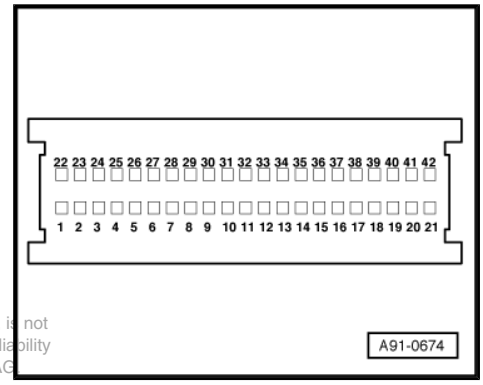

3 - Microphone output (+) to telephone bracket -R126-

4 - Battery feedback from telephone bracket -R126-

5 - Earth to telephone bracket -R126-

6 - Ser-Tx (+) to telephone bracket -R126-

8 - Screen earth, telephone bracket -R126-

9 - CAN Bus High (convenience)

10 - NF (+) (low frequency) to digital sound package control unit -J525-

Protected by copyright. Copying for private or commercial purposes, in part or in whole, is not permitted unless authorised by AUDI AG. AUDI AG does not guarantee or accept any liability with respect to the correctness of information in this document. Copyright by AUDI AG.

11 - Additional loudspeaker for telematics -R91- (+)

12 - Microphone input (+) from microphone unit in front roof module -R164-

13 - K wire

14 - Terminal 75

15 - LED “red” to telematics operating unit -E264-

16 - LED “green” to telematics operating unit -E264-

18 - Terminal 31

19 - Terminal 31

24 - NF (+) (low frequency) to telephone bracket -R126-

25 - Microphone output (–) to telephone bracket -R126-

26 - Terminal 30 to telephone bracket -R126-

27 - Ser-Rx (+) from telephone bracket -R126-

30 - CAN Bus Low (convenience)

31 - NF (–) (low frequency) to digital sound package control unit -J525-

32 - Additional loudspeaker for telematics -R91- (–)

33 - Microphone input (–) from microphone unit in front roof module -R164-

34 - NF mute (low frequency) to control unit for front display and information control panel -J523-

35 - From telematics operating unit -E264-

36 - To telematics operating unit -E264-

38 - Crash signal from airbag control unit -J234-

39 - Terminal 30

40 - Terminal 30

41 - Emergency battery, telematics -A16- (+)

42 - Emergency battery, telematics -A16- (–)

16.4 Overview of fitting locations

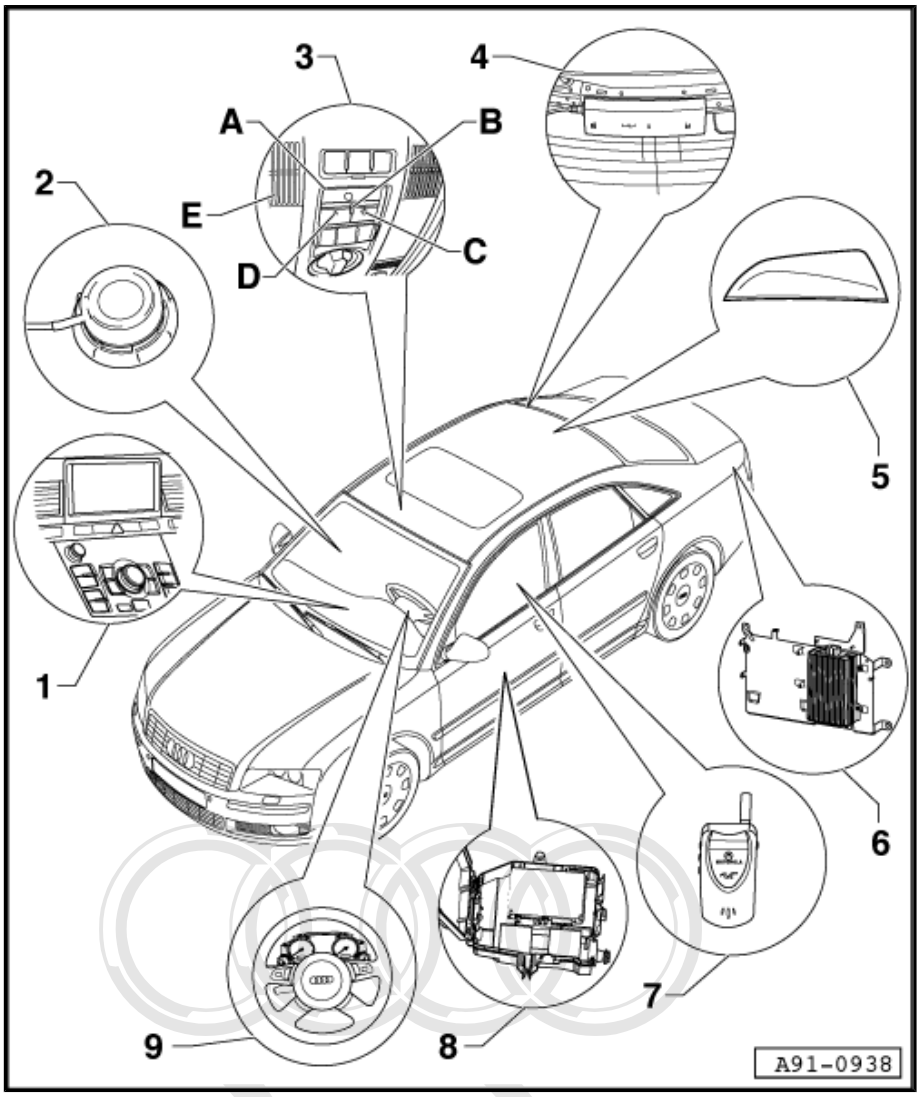

1 - Display unit for front information control unit -J685-

- ❑ In dash panel (centre)

Multimedia system operating unit -E380-

- ❑ In centre console (bottom)

2 - Additional loudspeaker for telematics -R91-

- ❑ In B-pillar trim (right-side)
- ❑ Removing and installing ⇒ page 266

3 - Front interior light -W1-

- ❑ Telematics operating unit -E264-

- ♦ A: Breakdown help button -E275-
- ♦ B: Telematics warning lamp -K186-
- ♦ C: Emergency call button -E276-
- ♦ D: End of conversation button, Telematics (USA) -E331-
- ♦ E: Microphone unit in front roof module -R164-
  - ❑ Removing and installing telematics operating unit -E264- ⇒ page 267
  - ❑ Overview of microphone unit in front roof module -R164- ⇒ page 146
  - ❑ Removing and installing microphone unit in front roof module -R164- ⇒ page 168

4 - Telephone aerial -R65-

- ❑ GSM
- ❑ Behind roof end trim (right-side)
- ❑ Overview ⇒ page 85

5 - Radio, telephone and navigation system aerial -R52-

- ❑ Ter/Sat/GPS/additional GSM
- ❑ Roof aerial
- ❑ Overview ⇒ page 85

6 - Digital sound package control unit -J525-

- ❑ Behind luggage compartment side trim (left-side)

7 - Mobile telephone -R54-

- ❑ In centre console (bottom)
- ❑ Removing and installing telephone bracket -R156- ⇒ page 161

Protected by copyright. Copying for private or commercial purposes, in part or in whole, is not permitted unless authorised by AUDI AG. AUDI AG does not guarantee or accept any liability with respect to the correctness of information in this document. Copyright by AUDI AG.

8 - Telephone/telematics control unit -J526-

- ❑ In front of front left seat beneath floor covering
- ❑ Pin assignment ⇒ page 263
- ❑ Removing and installing ⇒ page 266

9 - Multi-function steering wheel

- ❑ Removing and installing buttons ⇒ page 255

16.5 Removing and installing telephone and telematics control unit -J526-

– When renewing control unit, select “Replacement” function for appropriate control unit in “Guided Fault Finding”.

To do so, use the vehicle diagnostic, testing and information system -VAS 5051- .

– Switch off all electrical equipment.

– Remove ignition key.

Removing

– Remove front seat (left-side) ⇒ General body repairs, interior; Rep. Gr. 72 .

– Fold back floor covering ⇒ General body repairs, interior; Rep. Gr. 70 .

– Release electronics box cover and open box -arrows-.

Protected by copyright. Copying for private or commercial purposes, in part or in whole, is not permitted unless authorised by AUDI AG. AUDI AG does not guarantee or accept any liability with respect to the correctness of information in this document. Copyright by AUDI AG.

The telephone and telematics control unit -J526- and the emergency battery, telematics -A16- are only a push-fit in the electronics box.

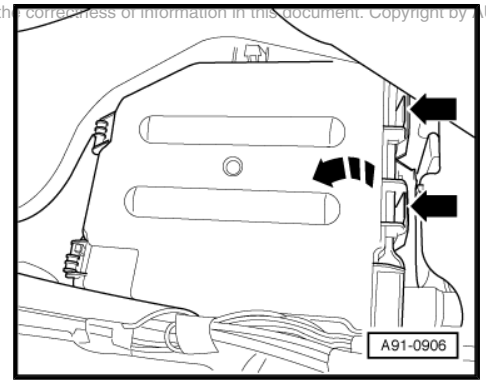

– Pry the telephone and telematics control unit -J526- -1- out of electronics box -2- in direction of arrow.

– Unplug all connectors at telephone and telematics control unit -J526- .

– Remove emergency battery, telematics -A16- .

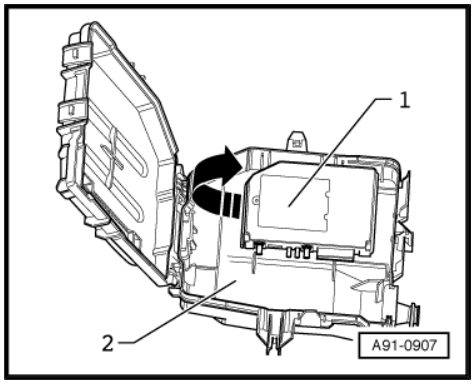

Installing

– Installation is performed in reverse sequence.

16.6 Removing and installing additional loudspeaker for telematics -R91-

– Switch off all electrical equipment.

– Remove ignition key.

Removing

– Remove bottom B-pillar trim (passenger's side) ⇒ General body repairs, interior; Rep. Gr. 70 .

– Unplug connectors and remove trim.

– Unscrew ring -1- on outside of additional loudspeaker for telematics -R91- -2- in direction of -arrow- and remove additional loudspeaker for telematics -R91- -2- from trim towards front.

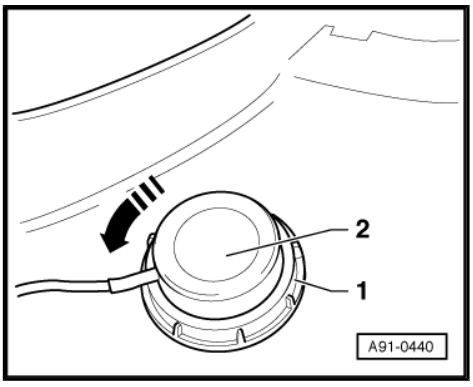

Installing

– Installation is performed in reverse sequence.

16.7 Removing and installing telematics operating unit -E264-

– Switch off all electrical equipment.

– Remove ignition key.

Removing

– Remove front interior light -W1- ⇒ Electrical system; Rep. Gr. 96 .

– Unplug connector -1- and unclip it from mount -2-.

– Unclip telematics operating unit -E264- from retainer -arrow 2- on front of front interior light -W1- and swivel telematics operating unit -E264- upwards out of front interior light -W1- -arrow 1-.

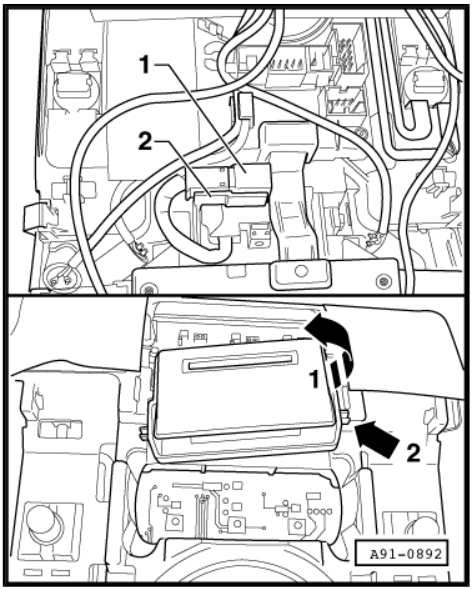

Installing

– Installation is performed in reverse sequence.

Protected by copyright. Copying for private or commercial purposes, in part or in whole, is not permitted unless authorised by AUDI AG. AUDI AG does not guarantee or accept any liability with respect to the correctness of information in this document. Copyright by AUDI AG.

17 Voice control system

17.1 General notes (up to week 35/08)

The voice control system is designed for acoustic operation of telephone, telematics, radio and navigation systems.

Functions can be conveniently operated by simple voice commands. The system is activated via the talk button on the multifunction steering wheel.

Fault finding is performed via the “Guided Fault Finding” using ⇒ Vehicle diagnosis, testing and information system VAS 5051.

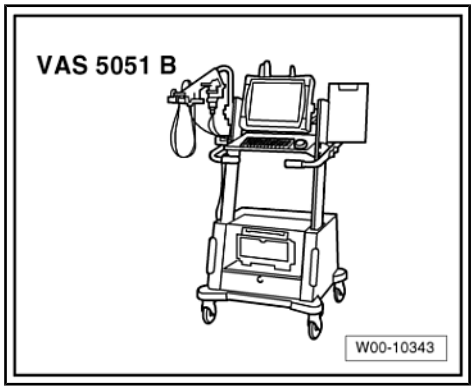

17.2 General notes (from week 36/08 onwards)

The voice control system enables voice operation of the telephone, Infotainment and navigation systems.

Functions can be conveniently operated by simple voice commands. The system is activated via the talk button on the multifunction steering wheel.

The voice control system is integrated in the control unit 1 for information electronics -J794- .

Fault finding is performed via the “Guided Fault Finding” ⇒ Vehicle diagnosis, testing and information system VAS 5051.

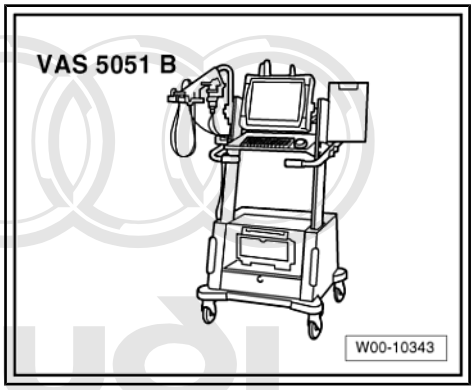

Protected by copyright. Copying for private or commercial purposes, in part or in whole, is not permitted unless authorised by AUDI AG. AUDI AG does not guarantee or accept any liability with respect to the correctness of information in this document. Copyright by AUDI AG.

17.3 Voice control system (up to week 35/08) - layout

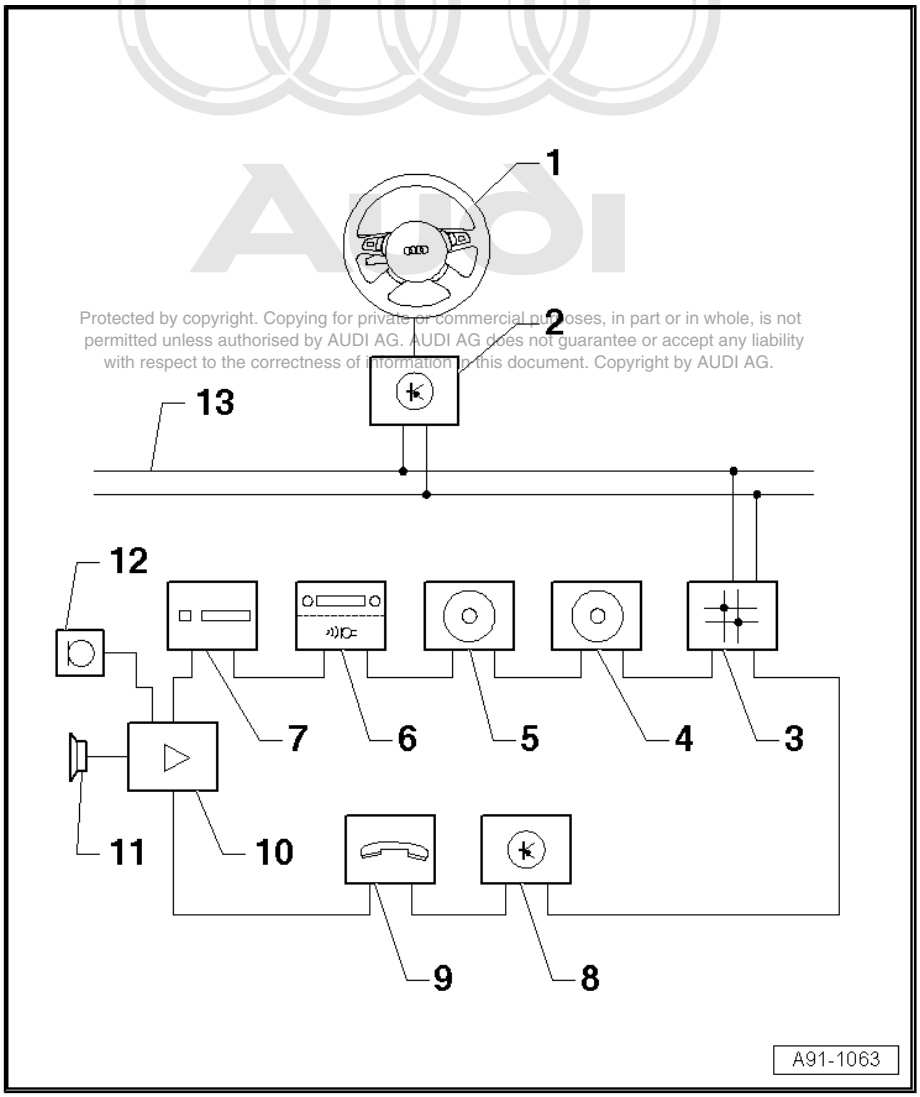

Protected by copyright. Copying for private or commercial purposes, in part or in whole, is not permitted unless authorised by AUDI AG. AUDI AG does not guarantee or accept any liability with respect to the correctness of information in this document. Copyright by AUDI AG.

1 - Multi-function steering wheel

2 - Steering column electronics control unit -J527-

- On steering column at steering column switch

3 - Data bus diagnostic interface -J533-

- Behind glove box

4 - Media player in position 1 -R118-

- In glove box

5 - Media player in position 2 -R119-

- In glove box

6 - Radio -R-

- Behind luggage compartment side trim (left-side)
- With speech input control unit -J507-
- Pin assignment, speech input control unit -J507- (up to week 35/08) ⇒ page 271
- Removing and installing speech input control unit -J507- (up to week 35/08) ⇒ page 271

7 - Navigation system with CD drive control unit -J401-

- Behind luggage compartment side trim (left-side)

8 - Control unit for front display and information control panel -J523-

- Behind glove box

9 - Telephone transmitter and receiver unit -R36-

- In front of front left seat beneath floor covering

10 - Digital sound package control unit -J525-

- Behind luggage compartment side trim (left-side)

11 - Sound systems

12 - Microphone unit in front roof module -R164-

- Overview ⇒ page 16

13 - CAN bus (convenience)

17.4 Layout in MMI (from week 36/08 onwards)

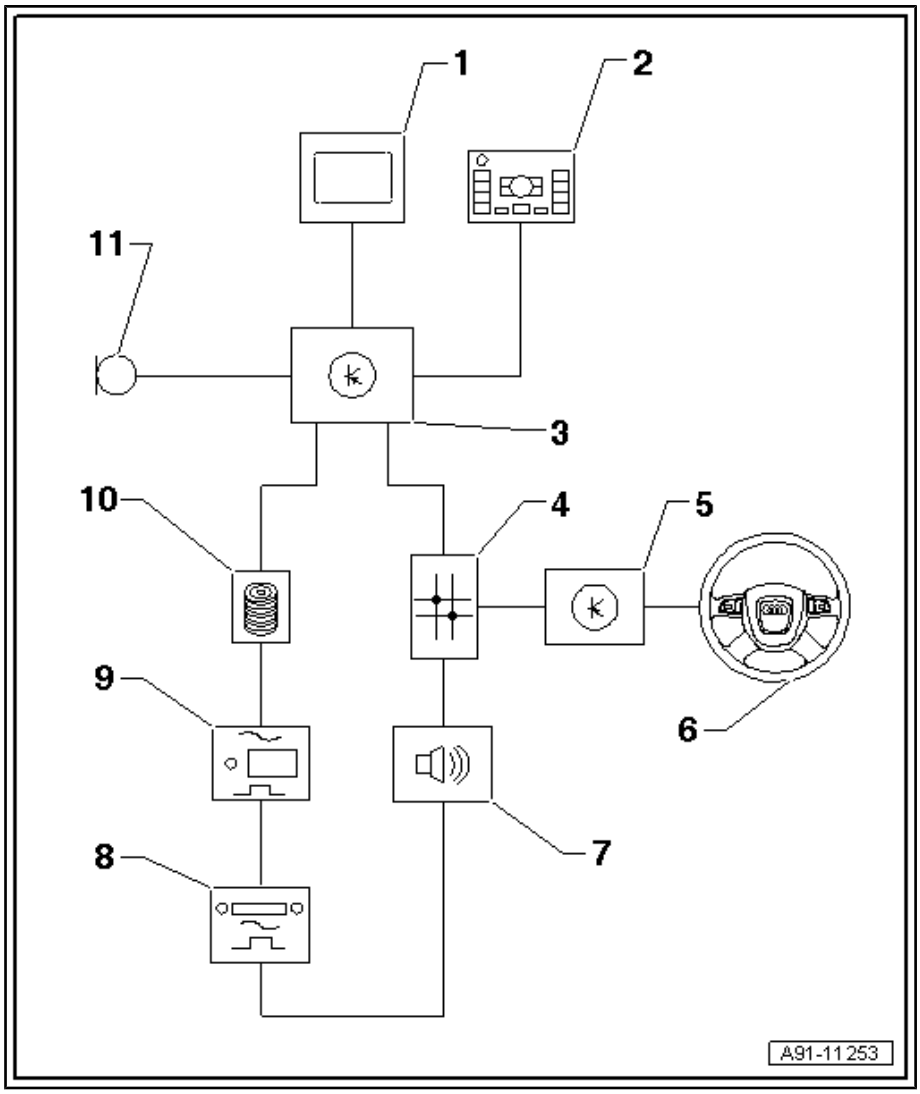

1 - Display unit for front information display and operating unit control unit -J685-

- In dash panel (centre)

2 - Multimedia system operating unit -E380-

- In centre console (bottom)

3 - Control unit 1 for information electronics -J794-

- In glove box (left-side)
- Pin assignment ⇒ page 11
- Removing and installing ⇒ page 21
- Removing and installing voice control system (from week 36/08 onwards) ⇒ page 272

4 - Data bus diagnostic interface -J533-

- Behind glove box

5 - Steering column electronics control unit -J527-

- On steering column at steering column switch

6 - Multi-function steering wheel

- Removing and installing buttons ⇒ page 255

7 - Digital sound package control unit -J525-

- Behind luggage compartment side trim (left-side)

8 - Radio -R-

- Behind luggage compartment side trim (left-side)

9 - TV tuner -R78-

- Behind luggage compartment side trim (left-side)

10 - CD changer -R41-

- In glove box (right-side)

11 - Microphone unit in front roof module -R164-

- Overview (from week 36/08 onwards) ⇒ page 17

Protected by copyright. Copying for private or commercial purposes, in part or in whole, is not permitted unless authorised by AUDI AG. AUDI AG does not guarantee or accept any liability with respect to the correctness of information in this document. Copyright by AUDI AG.

17.5 Connector on speech input control unit -J507- (up to week 35/08)

Note

Contacts which are not listed are not used.

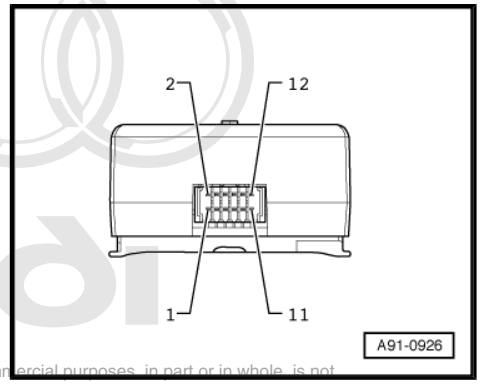

Protected by copyright. Copying for private or commercial purposes, in part or in whole, is not permitted unless authorised by AUDI AG. AUDI AG does not guarantee or accept any liability with respect to the correctness of information in this document. Copyright by AUDI AG.

Multi-pin connector, 12-pin (T12d)

3 - Status

4 - Diagnosis

5 - Terminal 30

6 - Reset signal

7 - Power good

8 - Power on

9 - Terminal 31

10 - MOST out

11 - Enable

12 - MOST in

17.6 Removing and installing speech input control unit -J507- (up to week 35/08)

– When renewing control unit, select “Replacement” function for appropriate control unit in “Guided Fault Finding”.

To do so, use the vehicle diagnostic, testing and information system -VAS 5051- .

– Switch off all electrical equipment.

– Remove ignition key.

Removing

– Remove radio -R- ⇒ page 109 .

– Open radio cover -2- for radio -R- and fold it down -arrow-.
– Carefully pull the speech input control unit -J507- -1- in the direction of the arrow out of the radio -R- .

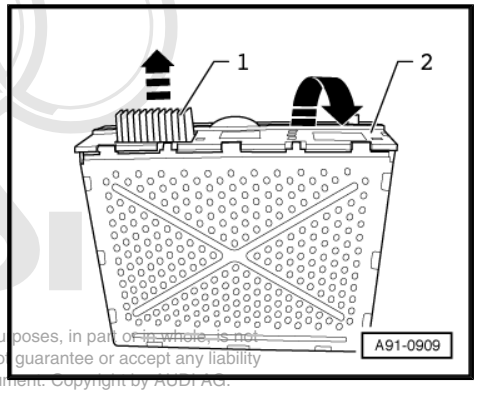

Installing

– Installation is performed in reverse sequence.
– Be sure that the connector between speech input control unit -J507- and radio -R- properly engages in the radio -R- .

Check the function as follows:

– Switch on the radio -R- .
– Briefly press the talk button on the multi-function steering wheel.

Protected by copyright. Copying for private or commercial purposes, in part or in whole, is not permitted unless authorised by AUDI AG. AUDI AG does not guarantee or accept any liability with respect to the correctness of information in this document. Copyright by AUDI AG.

A “BEEP” tone should sound; this indicates that the speech dialogue system is activated.

– Say the command “HELP”.

Since the radio -R- is activated, the speech dialogue system should respond with “Commands for the radio are ...”.

Depending on the equipment, you can to switch to other functions:

– If the vehicle is equipped with a telephone, say “TELEPHONE”.

The speech dialogue system switches to the telephone mode.

– Press talk button for approx. 1 second.

The speech dialogue system responds with “Cancel” and is deactivated.

17.7 Removing and installing voice control system (from week 36/08 onwards)

The voice control system is part of the control unit 1 for information electronics -J794- (MMI) located in the glove box and cannot be renewed separately.

In the event of a defect, the control unit 1 for information electronics -J794- must be renewed.

– Switch off all electrical equipment.
– Remove ignition key.
– When renewing control unit, select “Replacement” function for appropriate control unit in “Guided Fault Finding”.

To do so, use the vehicle diagnostic, testing and information system -VAS 5051- .

Removing

– Remove control unit 1 for information electronics -J794- ⇒ page 21 .

Installing

– Install control unit 1 for information electronics -J794- ⇒ page 21 .

Check the function as follows:

– Switch on the radio -R- .
– Briefly press the talk button on the multi-function steering wheel.

A “BEEP” tone should sound; this indicates that the speech dialogue system is activated.

– Say the command “HELP”.

Since the radio -R- is activated, the speech dialogue system should respond with “Commands for the radio are ...”.

Depending on the equipment, you can to switch to other functions:

– If the vehicle is equipped with a telephone, say “TELEPHONE”.

The speech dialogue system switches to the telephone mode.

– Press talk button for approx. 1 second.

The speech dialogue system responds with “Cancel” and is deactivated.

Protected by copyright. Copying for private or commercial purposes, in part or in whole, is not permitted unless authorised by AUDI AG. AUDI AG does not guarantee or accept any liability with respect to the correctness of information in this document. Copyright by AUDI AG.

18 RSE (Rear Seat Entertainment system) - high ALPINE

18.1 General notes

The “Rear Seat Entertainment system” consists of:

- Rear DVD changer -R162- with remote control
- Display units in head restraints of front seats
- Headphone connections in rear centre console
- Connections for video/game console in rear centre console

The audio and video signals from the rear DVD changer -R162- are also reproduced via the MMI and the sound system of the vehicle.

If TV tuner -R78- is fitted, the audio and video signals can be reproduced by all displays.

DVD navigation displays can also be reproduced on the additional display units in the head restraints.

Protected by copyright. Copying for private or commercial purposes, in part or in whole, is not permitted unless authorised by AUDI AG. AUDI AG does not guarantee or accept any liability with respect to the correctness of information in this document. Copyright by AUDI AG.

Additional information ⇒ Owner's Manual for RSE .

Repairing fibre optic cables ⇒ Electrical system; Rep. Gr. 97 .

Repairing aerial wiring ⇒ Electrical system; Rep. Gr. 97 .

18.2 Fault messages

The control units of the RSE system do not have self-diagnosis capability. Faults cannot be detected by means of the vehicle diagnostic, testing and information system -VAS 5051- .

Possible causes of customer complaints:

- RSE system does not reproduce video and audio signals in DVD mode
- Remote control functions not OK.
- Video faults (poor picture, etc) on display units and malfunctions of rear DVD changer -R162-
- No audio signal (headphones connected)

Fault	Cause	Remedy
♦ System cannot be switched on	♦ Trailer detector control unit -J345- coding does not correspond to equipment.	– Code trailer detector control unit -J345- using ⇒ Vehicle diagnosis, testing and information system VAS 5051.
♦ Power lamps on display units do not light up	♦ Fuses in fuse holder, luggage compartment (right-side) not OK.	– Renew fuse ⇒ Current flow diagrams, Electrical fault finding and Fitting locations.
♦ DVD magazine in rear DVD changer -R162- cannot be ejected and inserted	♦ Current supply relay -J16- in luggage compartment (right-side) defective/not connected	– Renew current supply relay -J16- ⇒ Current flow diagrams, Electrical fault finding and Fitting locations. ♦ Part no.: 4E0.088.890

Fault	Cause	Remedy
♦ Remote control without function ♦ Rear DVD changer -R162- cannot be switched on with remote control ♦ The three green LEDs on rear DVD changer -R162- do not light up ♦ Vertical image control on display unit not OK ♦ “Alpine” logo does not appear on display units	♦ SETUP procedure not performed	♦ Make the following settings with the remote control: – Press RTN button for at least 5 seconds. – Press MENU button for at least 5 seconds. – Select “CUSTOM SETUP” and confirm with ENT button. – Select “H.U.CONTROL” and confirm with ENT button. – Select “Off” and confirm with ENT button. – Press MENU button for at least 5 seconds and exit menu. – Unplug connector (No. 6) on underside of rear DVD changer -R162- and wait for at least 30 seconds before reconnecting it. Switch on system.
♦ Remote control without function/limited function ♦ Batteries in remote control OK ♦ Red LED in remote control lights up	♦ Battery capacity not sufficient ♦ Other fault (battery capacity OK)	– Renew batteries, – Unplug connector (No. 6) on underside of rear DVD changer -R162- and wait for at least 30 seconds before reconnecting it. Switch on system.
♦ Image processing of display units does not correspond to usual standard ♦ Grey tones, vertical image control not OK	♦ Video format “PAL” not set	– Press DISP buttons on display units and set “PAL” mode. ♦ or – Press POWER button on remote control for at least 5 seconds and set display units to “PAL” mode. ♦ If the fault is not eliminated: – Unplug connector (No. 6) on underside of rear DVD changer -R162- and wait for at least 30 seconds before reconnecting it. Switch on system.
♦ No sound is audible through the headphones (headphones connected).	♦ RSE system not set to headphone reproduction	– Switch on RSE system. – Press SETUP button on display unit for at least 5 seconds. – Select “SOUNDOUT” in the display unit menu and then select “HEADPHONE” from this menu using the arrow buttons. – Remain in this setting for at least 5 seconds; this will save the setting.

Protected by copyright. Copying for private or commercial purposes, in part or in whole, is not permitted unless authorised by AUDI AG. AUDI AG does not guarantee or accept any liability with respect to the correctness of information in this document. Copyright by AUDI AG.

Fault	Cause	Remedy
♦ No video signal on screen	♦ DVD not inserted correctly ♦ DVD with wrong regional code ♦ DVD-R or DVD-RW inserted	– Insert new DVD.

18.3 RSE system - high ALPINE - layout

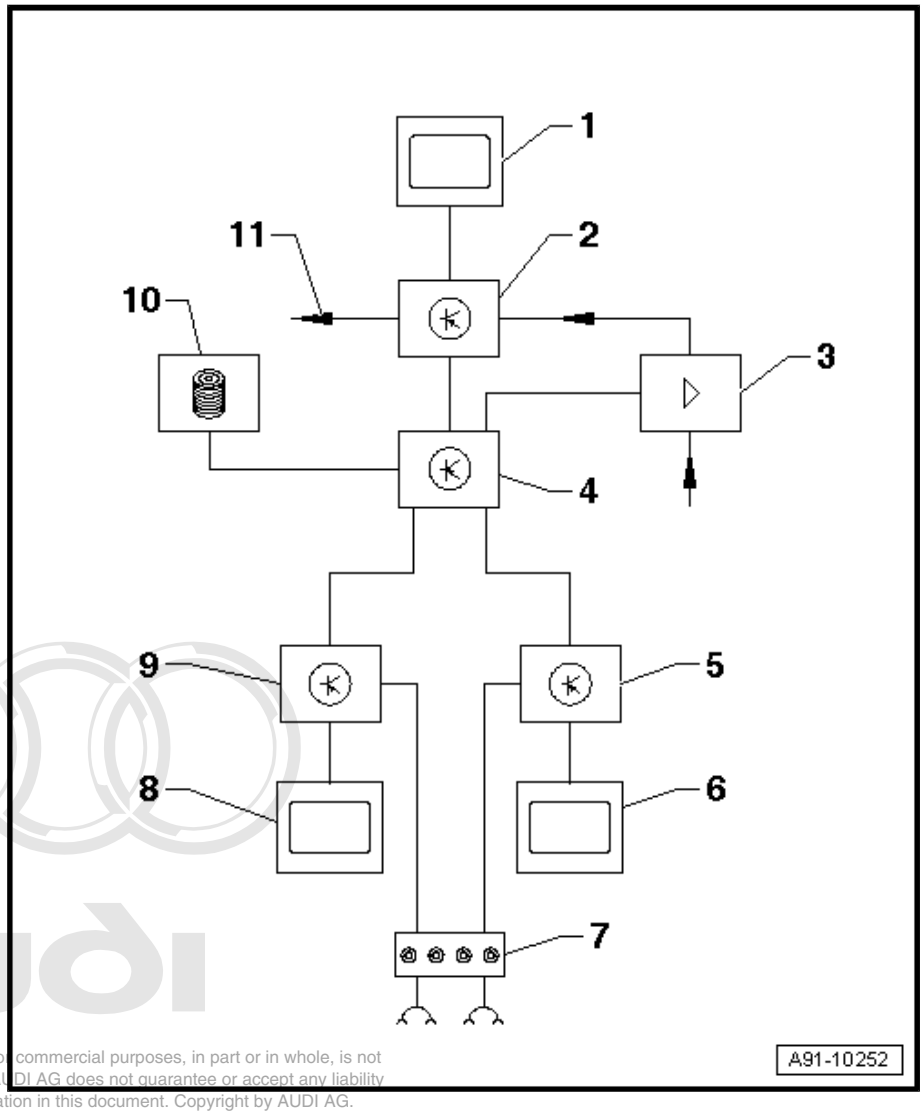

1 - Display unit for front information display and operating unit control unit -J685- in dash panel (centre)

2 - Control unit for front display and information control panel -J523- behind glove box

3 - TV tuner -R78- (analogue/ hybrid) behind luggage compartment side trim (left-side)

4 - Multimedia system signal splitter -R181- behind luggage compartment side trim (left-side)

5 - Multimedia system display unit 2 control unit -J747- behind luggage compartment side trim (left-side)

6 - Multimedia system display unit 2 -Y23- in head restraint of front seat (right-side)

7 - Additional connections unit for audio and video -R176- in rear centre console

8 - Multimedia system display unit 1 -Y22- in head restraint of front seat (left-side)

9 - Multimedia system display unit 1 control unit -J744- behind luggage compartment side trim (left-side)

10 - Rear DVD changer -R162- behind luggage compartment side trim (left-side)

11 - MOST bus

Protected by copyright. Copying for private or commercial purposes, in part or in whole, is not permitted unless authorised by AUDI AG. AUDI AG does not guarantee or accept any liability with regard to the correctness of information in this document. Copyright by AUDI AG.

18.4 Connectors on rear DVD changer -R162- - ALPINE

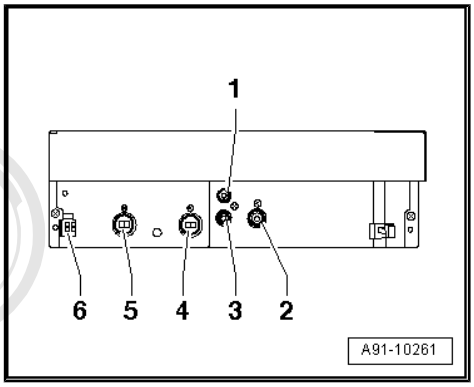

Rear DVD changer -R162-

1 - Audio signal (left-side), white

2 - Video signal, yellow

3 - Audio signal (right-side), red

4 - Not used

5 - Not used

6 - Multi-pin connector, 4-pin, white

Note

Contacts which are not listed are not used.

Protected by copyright. Copying for private or commercial purposes, in part or in whole, is not permitted unless authorised by AUDI AG. AUDI AG does not guarantee or accept any liability with respect to the correctness of information in this document. Copyright by AUDI AG.

6 - Multi-pin connector, 4-pin, white

1 - Remote DVD to multimedia system signal splitter -R181-

2 - Terminal 31 to earth point, luggage compartment (left-side)

3 - Terminal 15 to current supply relay -J16- in relay and fuse holder in luggage compartment (right-side)

4 - Terminal 30 to communications fuse -S254- in relay and fuse holder in luggage compartment (right-side)

18.5 Connectors on control units for display units

Note

Contacts which are not listed are not used.

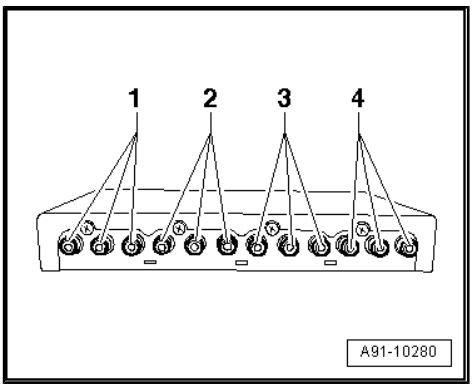

Front side

1 - Aux Output 3 (not used)

2 - Aux Input 3 (yellow, white, red) from multimedia system signal splitter -R181-

3 - Aux Input 2 (yellow, white, red) from multimedia system signal splitter -R181-

4 - Aux Input 1 (yellow, white, red) from multimedia system signal splitter -R181-

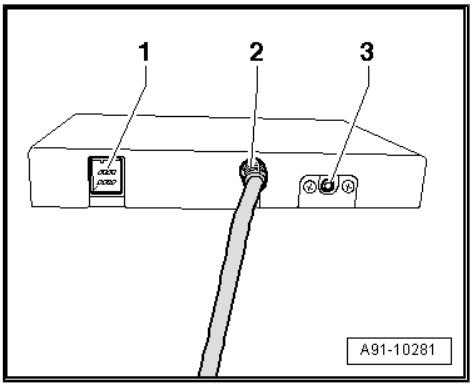

Reverse side

1 - Multi-pin connector, 8-pin, black (T8aa/T8ab)

2 - Wiring to display unit

3 - Headphone connection, black (T3ad/T3ae) to additional connections unit for audio and video -R176-

1 - Multi-pin connector, 8-pin, black (T8aa/T8ab)

1 - Terminal 31 to earth point, luggage compartment (left-side)

3 - Terminal 15 to current supply relay -J16- in relay and fuse holder in luggage compartment (right-side)

4 - Terminal 31 to earth point, luggage compartment (left-side)

7 - Monitor 1/monitor 2 to multimedia system signal splitter -R181-

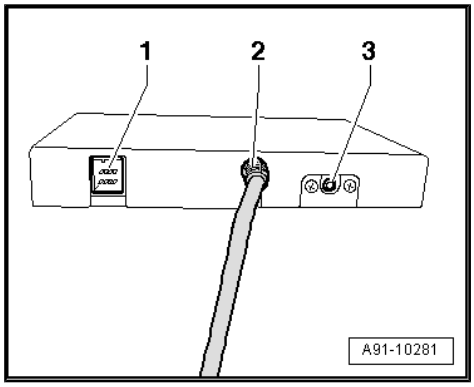

18.6 Connectors on multimedia system signal splitter -R181-

Multimedia system signal splitter -R181-

1 - Multi-pin connector, 20-pin, red (T20aa) to multimedia system display unit 1 control unit -J744- / multimedia system display unit 2 control unit -J747-

2 - Multi-pin connector, 16-pin, brown (T16e)

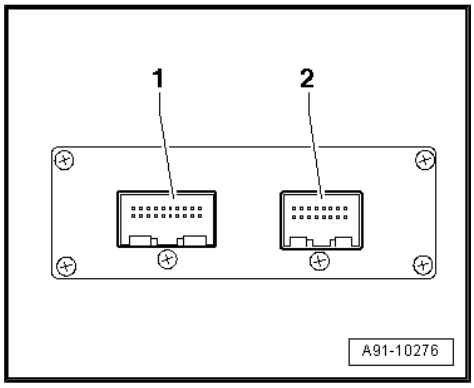

Note

Contacts which are not listed are not used.

2 - Multi-pin connector, 16-pin, brown (T16e)

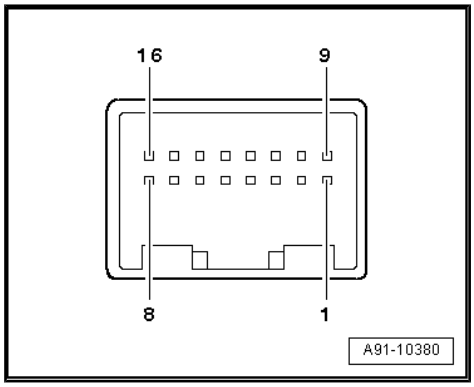

1 - Terminal 15 to current supply relay -J16- in relay and fuse holder in luggage compartment (right-side)

2 - Remote DVD to rear DVD changer -R162-

3 - Remote monitor 1 to multimedia system display unit 1 control unit -J744-

4 - Remote monitor 2 to multimedia system display unit 2 control unit -J747-

5 - Video to control unit for front display and information control panel -J523-

6 - Audio, left (L) from TV tuner -R78-

7 - Audio, right (R) from TV tuner -R78-

8 - Screen earth

9 - Terminal 31 to earth point, luggage compartment (left-side)

10 - Video from TV tuner -R78-

Published by copyright. Copying for private or commercial purposes, in part or in whole, is not permitted unless authorised by AUDI AG. AUDI AG does not guarantee or accept any liability with respect to the correctness of information in this document. Copyright by AUDI AG.

18.7 Overview of fitting locations

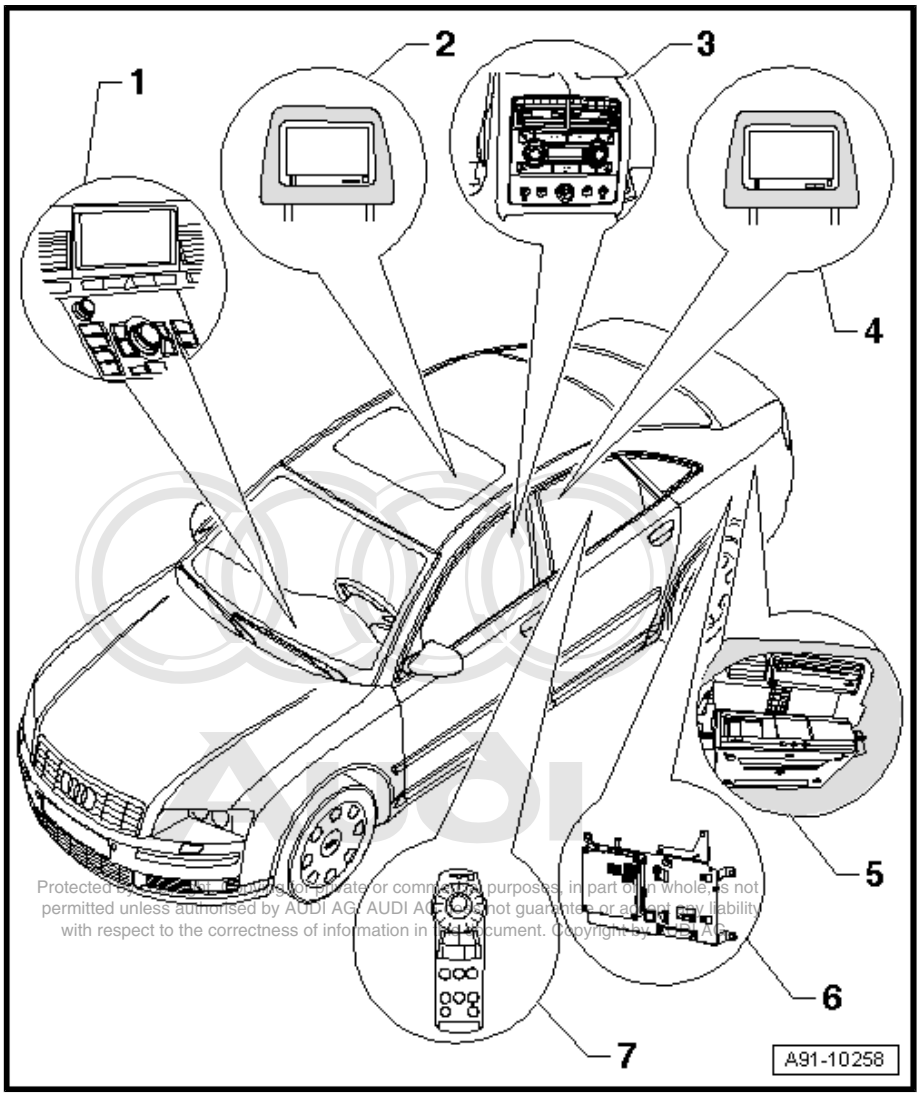

1 - Display unit for front information display and operating unit control unit -J685-

- ❑ In dash panel (centre)

- Multimedia system operating unit -E380-

- ❑ In centre console

2 - Multimedia system display unit 2 -Y23-

- ❑ In head restraint of front seat (right-side)
- ❑ Removing and installing ⇒ page 283

3 - Additional connections unit for audio and video -R176-

- ❑ In rear centre console
- ❑ Removing and installing ⇒ page 281

4 - Multimedia system display unit 1 -Y22-

- ❑ In head restraint of front seat (left-side)
- ❑ Removing and installing ⇒ page 283

5 - Rear DVD changer -R162-

- ❑ Behind luggage compartment side trim (left-side)
- ❑ Pin assignment ⇒ page 277
- ❑ Removing and installing ⇒ page 281

- Multimedia system display unit 1 control unit -J744-

- ❑ Pin assignment ⇒ page 277
- ❑ Removing and installing ⇒ page 280

- Multimedia system display unit 2 control unit -J747-

- ❑ Pin assignment ⇒ page 277
- ❑ Removing and installing ⇒ page 280

- Multimedia system signal splitter -R181-

- ❑ Pin assignment ⇒ page 278
- ❑ Removing and installing ⇒ page 280

6 - TV tuner -R78-

- ❑ Behind luggage compartment side trim (left-side)
- ❑ Pin assignment (hybrid) ⇒ page 224
- ❑ Pin assignment (analogue) ⇒ page 221
- ❑ Removing and installing ⇒ page 229

7 - Remote control for rear DVD changer -R162-

- ❑ In storage compartment on rear centre armrest

Protected by copyright. Copying for private or commercial purposes, in part or in whole, is not permitted unless authorised by AUDI AG. AUDI AG does not guarantee or accept any liability with respect to the correctness of information in this document. Copyright by AUDI AG.

❑ Removing and installing storage compartment ⇒ page 285

18.8 Removing and installing multimedia system display unit 1 control unit -J744-

The procedure for removing and installing multimedia system display unit 1 control unit -J744- and multimedia system display unit 2 control unit -J747- is the same.

– Switch off all electrical equipment.

– Remove ignition key.

Removing

– Remove luggage compartment side trim (left-side) ⇒ General body repairs, interior; Rep. Gr. 70 .

– Unscrew bolt -3- (3 Nm).

– Remove navigation system with CD drive control unit -J401- together with mounting frame -2- ⇒ page 201 .

– Remove multimedia system signal splitter -R181- -1- ⇒ page 280 .

– Unscrew nuts -4- (front and rear), -6- and -7- (3 Nm).

– Carefully pull mounting frame -5- out of mounting and unplug connectors for vehicle wiring harness.

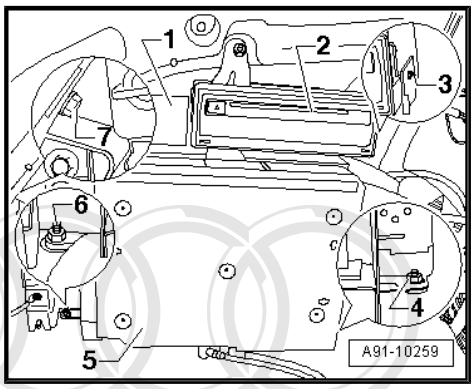

– Unscrew two bolts -arrows- (2 Nm) on underside of mounting frame.

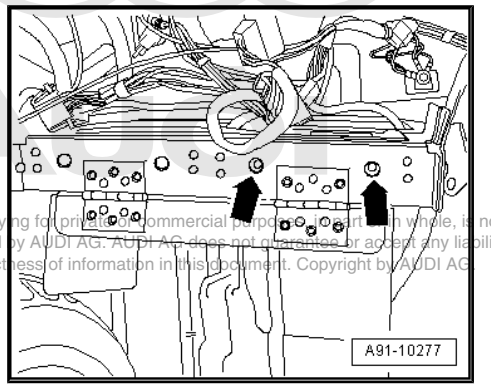

Protected by copyright. Copying for private or commercial purposes, in part or in whole, is not permitted unless authorised by AUDI AG. AUDI AG does not guarantee or accept any liability with respect to the correctness of information in this document. Copyright by AUDI AG.

– Unscrew two bolts -arrows- (2 Nm) on top surface.

– Carefully swivel multimedia system display unit 1 control unit -J744- -2- out of mounting frame -1- and unplug connectors.

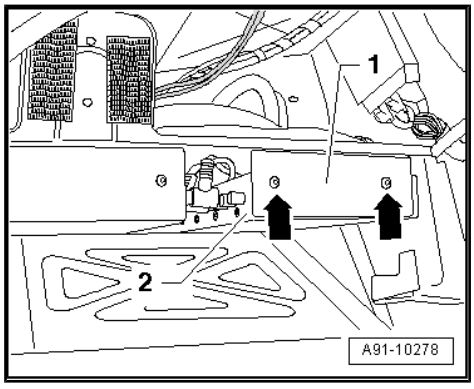

Apply coloured tape to connectors to make sure connectors are fitted in the same position when re-attaching.

Installing

– Installation is performed in reverse sequence.

18.9 Removing and installing multimedia system signal splitter -R181-

– Switch off all electrical equipment.

– Remove ignition key.

Removing

For better access, first remove navigation system with CD drive control unit -J401- with bracket -3- ⇒ page 201 .

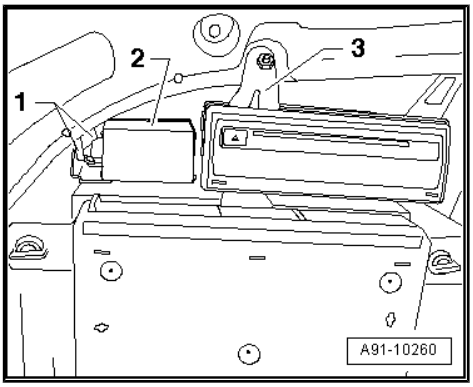

– The multimedia system signal splitter -R181- -2- is attached to the bracket of the rear DVD changer -R162- with Velcro strip.
– Detach multimedia system signal splitter -R181- -2- from bracket.
– Unplug connectors -1- at multimedia system signal splitter -R181- .

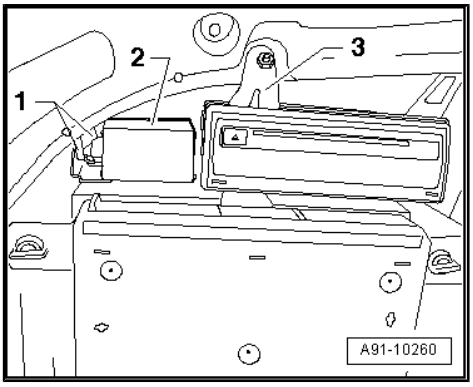

Installing

– Installation is performed in reverse sequence.

18.10 Removing and installing rear DVD changer -R162-

– Switch off all electrical equipment.
– Remove ignition key.

Removing

– Open left-side luggage compartment storage area.
– Swivel out rear DVD changer -R162- and remove DVD magazine ⇒ Operating instructions for RSE .
– Unscrew bolts -1- and -2- (3 Nm) and remove rear DVD changer -R162- from mounting frame.

Protected by copyright. Copying for private or commercial purposes, in part or in whole, is not permitted unless authorised by AUDI AG. AUDI AG does not guarantee or accept any liability with respect to the correctness of information in this document. Copyright by AUDI AG.

– Unplug electrical connectors at rear DVD changer -R162- .

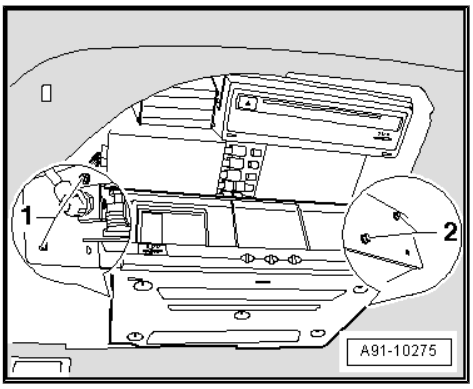

Installing

– Check installation position.

Must be set to “V”.

– Remove transport safeguards.
– Installation is performed in reverse sequence.

18.11 Removing and installing additional connections unit for video and audio -R176-

– Switch off all electrical equipment.
– Remove ignition key.

Removing

– Unclip cover on additional connections unit for video and audio -R176- -arrows-.

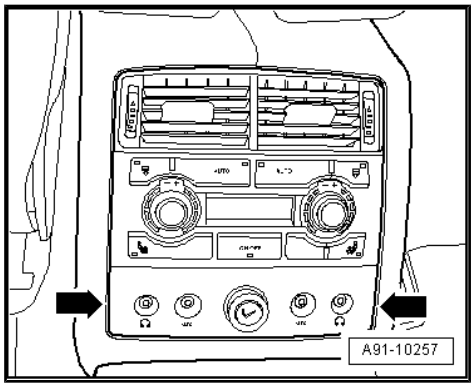

– Unscrew bolts -arrows- (3 Nm) on underside of additional connections unit for video and audio -R176- .

– Carefully detach complete unit from centre console.

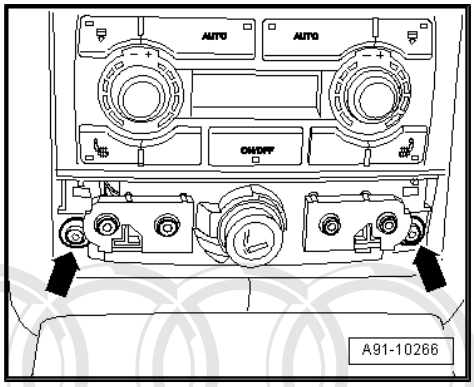

– Unplug connectors -1- to -4- on reverse side.

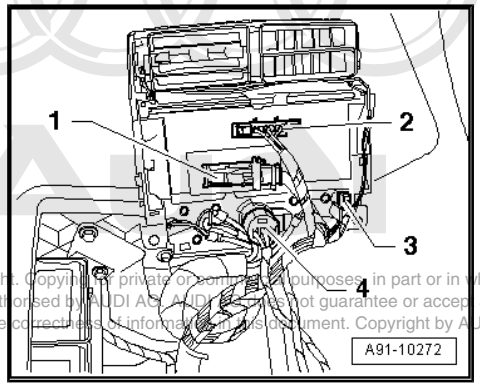

Protected by copyright. Copying for private or commercial purposes, in part or in whole, is not permitted unless authorised by AUDI AG. AUDI AG does not guarantee or accept any liability with respect to the correctness of information in this document. Copyright by AUDI AG.

– Unplug connectors -1- and -2- for additional connections unit for video and audio -R176- at end of centre console.

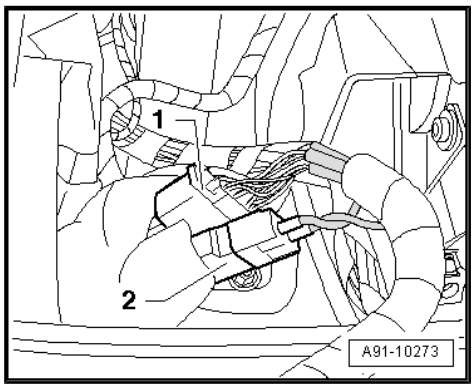

– Remove air outlets -1- and air conditioner operating unit -2-.

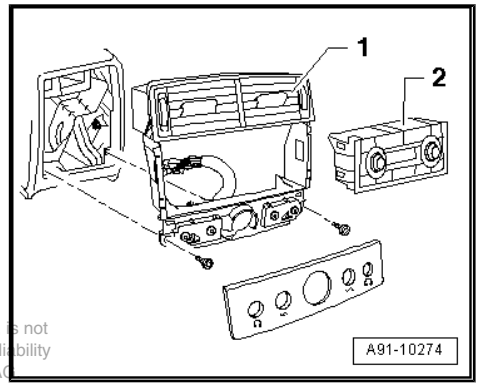

The mounting frame with additional connections unit for video and audio -R176- cannot be dismantled further.

Installing

– Installation is performed in reverse sequence.

Protected by copyright. Copying for private or commercial purposes, in part or in whole, is not permitted unless authorised by AUDI AG. AUDI AG does not guarantee or accept any liability with respect to the correctness of information in this document. Copyright by AUDI AG

18.12 Removing and installing display units in head restraints

18.12.1 Removing and installing multimedia system display unit 1 -Y22-

The procedure for removing and installing multimedia system display unit 1 -Y22- and multimedia system display unit 2 -Y23- is the same.

– Switch off all electrical equipment.

– Remove ignition key.

Removing

– Move head restraints to uppermost position and fold head restraint towards the front.

– Detach head restraint cover -2- from guide -1-.

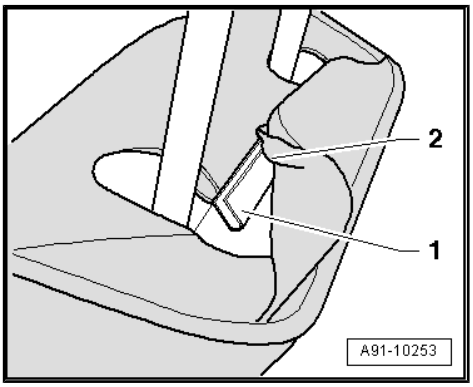

– Unscrew bolt -arrow- (3 Nm) on inside of head restraint.

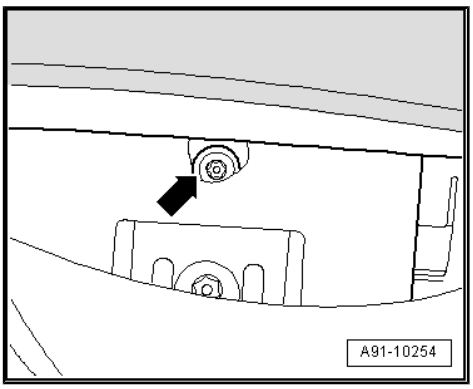

– Carefully lever multimedia system display unit 1 -Y22- out of head restraint -arrow- using a suitable tool.

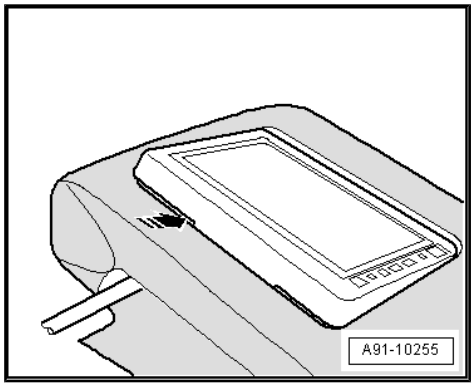

– Swivel multimedia system display unit 1 -Y22- -1- from head restraint -3- and unplug connector -2-.

– Remove multimedia system display unit 1 -Y22- .

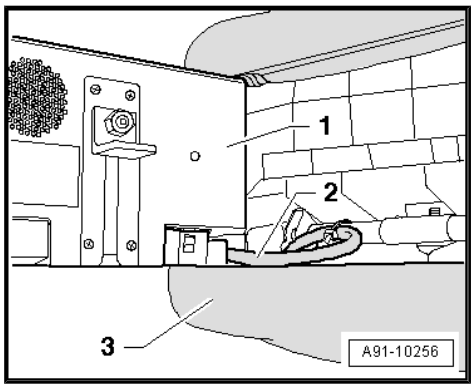

Installing

– Installation is performed in reverse sequence.

18.12.2 Removing and installing display unit wiring in backrest

For removing and and installing the display unit wiring to the multimedia system display unit 1 -Y22- the bottom backrest cover must be removed.

– Switch off all electrical equipment.

– Remove ignition key.

Removing

– Remove the bottom backrest cover ⇒ General body repairs, interior; Rep. Gr. 72 .

– Remove multimedia system display unit 1 -Y22- in head restraint ⇒ page 283 .

Display unit wiring is fitted in rail of head restraint. If the display unit wiring is defective, it must be unplugged at the bottom connector.

– Unplug connector of display unit wiring at bottom of seat and cut connector off.

Note

Keep connector for further use. Use connector during pin assignment.

Protected by copyright. Copying for private or commercial purposes, in part or in whole, is not permitted unless authorised by AUDI AG. AUDI AG does not guarantee or accept any liability with respect to the correctness of information in this document. Copyright by AUDI AG.

– Cut through cable tie -arrow- on head restraint and pull display unit wiring -2- out of head restraint rail -1-.

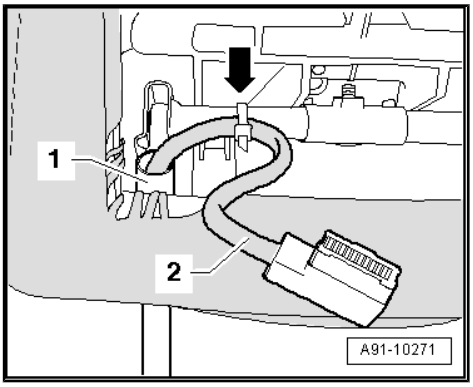

Installing

The display unit wiring is supplied without the bottom connector.

– Guide the free end of the display unit wiring through the rail of the head restraint and secure the display unit wiring with a cable tie -arrow-.

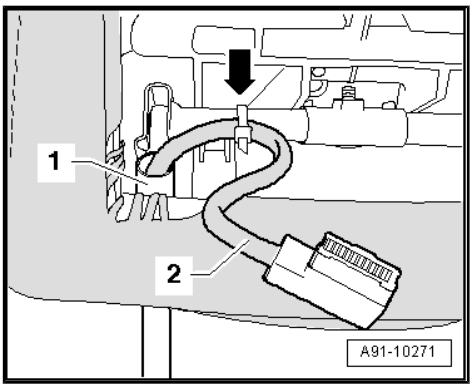

– Fit the connector to the other end of the display unit wiring.

Contact 10 is marked on the connector housing.

Pin assignment

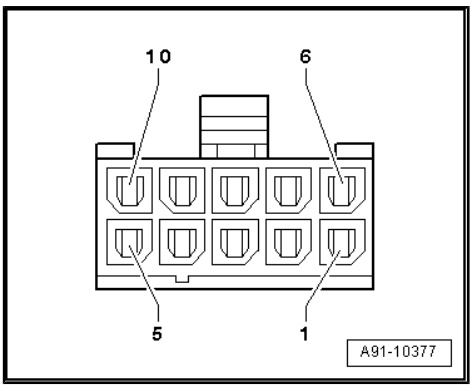

1 - Terminal 30, red
2 - Common screen, black
3 - IR-DATA, brown
4 - Video, white
5 - Video screen, black
6 - TxD, blue
7 - RxD, yellow

Pins 8 to 10 are not used.

– Perform further installation in reverse sequence.

Protected by copyright. Copying for private or commercial purposes, in part or in whole, is not permitted unless authorized by AUDI AG. AUDI AG does not guarantee or accept any liability with respect to the correctness of information in this document. Copyright by AUDI AG.

18.13 Removing and installing storage tray for remote controls

Special tools and workshop equipment required

♦ Removal wedge -3409-

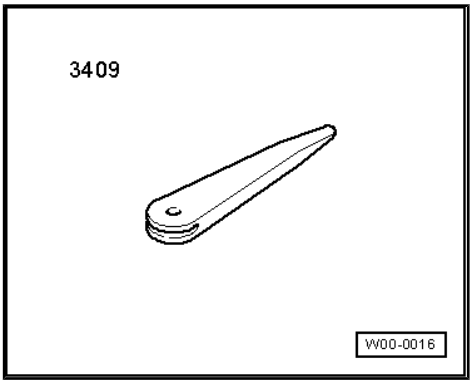

– Switch off all electrical equipment.

– Remove ignition key.

Removing

The storage tray is bonded to the storage compartment in the rear armrest.

– Take out remote controls -1- and -2-.

– Mask the edges to protect the centre armrest.

– Carefully lever the storage tray out of the storage compartment -arrows- using removal wedge -3409- .

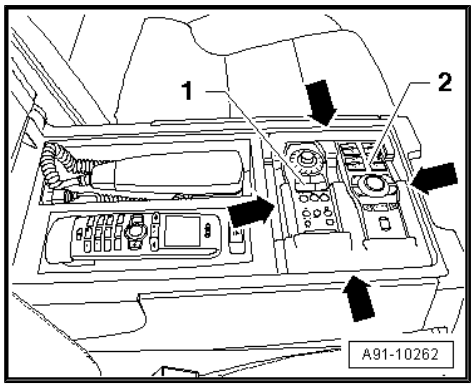

Installing

– Apply adhesive to sides of storage tray.

– Carefully press storage tray into storage compartment until upper edges of tray and storage compartment are flush.

– Remove surplus adhesive if necessary.

Protected by copyright. Copying for private or commercial purposes, in part or in whole, is not permitted unless authorised by AUDI AG. AUDI AG does not guarantee or accept any liability with respect to the correctness of information in this document. Copyright by AUDI AG.

19 RSE plus (Rear Seat Entertainment system) - Blaupunkt (from model year 2007 onwards)

19.1 General notes

The “Rear Seat Entertainment system - plus” consists of:

- Rear DVD changer -R162- with remote control
- Display units in head restraints of front seats
- Headphone connections in rear centre console
- Connections for video/game consoles in rear centre console

The audio and video signals from the rear DVD changer -R162- are also reproduced via the MMI and the sound system of the vehicle, if a TV tuner -R78- is fitted. Video signals can be reproduced by all displays.

Additional information ⇒ RSE plus operating manual .

Repairing fibre optic cables ⇒ Electrical system; Rep. Gr. 97 .

Repairing aerial wiring ⇒ Electrical system; Rep. Gr. 97 .

The control units of the RSE system do not have self-diagnosis capability. Faults cannot be detected using the ⇒ Vehicle diagnosis, testing and information system VAS 5051.

Protected by copyright. Copying for private or commercial purposes, in part or in whole, is not permitted unless authorised by AUDI AG. AUDI AG does not guarantee or accept any liability with respect to the correctness of information in this document. Copyright by AUDI AG.

19.2 RSE plus system - Blaupunkt - layout

1 - Display unit for front information display and operating unit control unit -J685- in dash panel (centre)

2 - Control unit for front display and information control panel -J523- behind glove box

3 - TV tuner -R78- (analogue/ hybrid) behind luggage compartment side trim (left-side)

4 - Multimedia system control unit -J650- behind luggage compartment side trim (left-side)

5 - Multimedia system display unit 2 -Y23- in head restraint of front seat (right-side)

6 - Multimedia system headphones for right side -R124- / additional connections unit for video and audio -R176- in centre console (rear right)

7 - Multimedia system headphones for left side -R123- / additional connections unit for video and audio -R176- in centre console (rear left)

8 - Multimedia system display unit 1 -Y22- in head restraint of front seat (left-side)

9 - Multi-pin connector (T4ah, black), connection to vehicle wiring harness behind luggage compartment side trim (left-side)

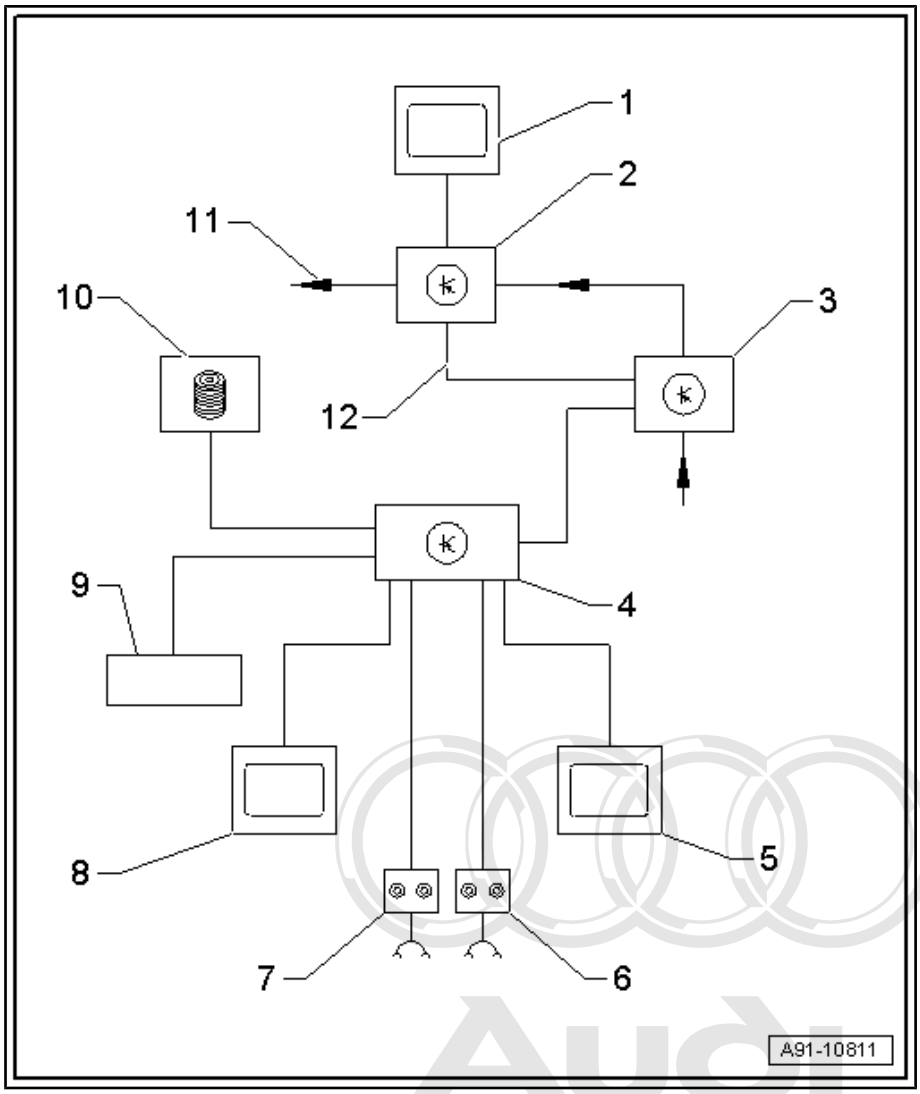

10 - Rear DVD changer -R162- behind luggage compartment side trim (left-side)

11 - MOST bus

12 - FBAS wire from TV tuner -R78- to control unit for front display and information control panel -J523-

Protected by copyright. Copying for private or commercial purposes, in part or in whole, is not permitted unless authorised by AUDI AG. AUDI AG does not guarantee or accept any liability with respect to the correctness of information in this document. Copyright by AUDI AG.

19.3 Connectors on rear DVD changer - R162- (DVC 03)

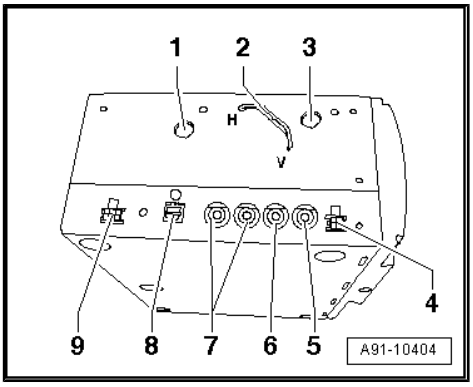

Note

Contacts which are not listed are not used.

Rear DVD changer -R162-

1 - Transport safeguard (removed)

2 - Installation position (must always be set to vertical “V”)

3 - Transport safeguard (removed)

4 - Remote - not used

5 - Video output 2 (not used)

6 - Video output 1 (yellow) to multimedia system control unit - J650-

7 - Audio output (white/red) to multimedia system control unit - J650-

8 - SPDIF (not used)

9 - Power supply (black) to multimedia system control unit - J650-

Connectors 6, 7 and 9 are routed together to connector socket T12u - adapter cable.

19.4 Connectors on rear DVD changer - R162- (DVC 06)

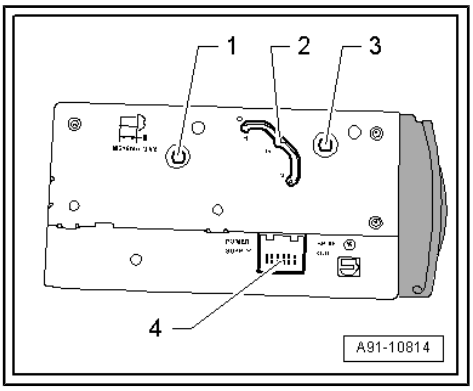

Rear DVD changer -R162-

1 - Transport safeguard (removed)

2 - Installation position (must always be set to vertical “V”)

3 - Transport safeguard (removed)

4 - Multi-pin connector, 12-pin, black (T12u) to multimedia system control unit -J650-

Note

Contacts which are not listed are not used.

Protected by copyright. Copying for private or commercial purposes, in part or in whole, is not permitted unless authorised by AUDI AG. AUDI AG does not guarantee or accept any liability with respect to the correctness of information in this document. Copyright by AUDI AG.

4 - Multi-pin connector, 12-pin, black (T12u)

1 - Terminal 30 from multimedia system control unit -J650- , red

2 - IR-DATA from multimedia system control unit -J650- , purple

3 - Audio (right-side) to multimedia system control unit -J650- , white

4 - Audio (left-side) to multimedia system control unit -J650- , white

5 - Video to multimedia system control unit -J650- , white

6 - Not used

7 - Terminal 31 from multimedia system control unit -J650- , black

8 - Switched terminal 30 from multimedia system control unit -J650- , orange

9 - TSENS from multimedia system control unit -J650- , green

10 - Screen earth (audio), black

11 - Screen earth (video), black

12 - Common screen, black

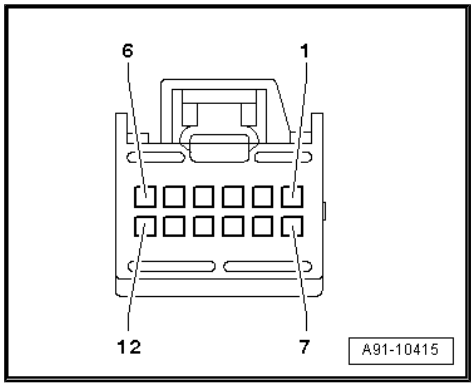

Protected by copyright. Copying for private or commercial purposes, in part or in whole, is not permitted unless authorised by AUDI AG. AUDI AG does not guarantee or accept any liability with respect to the correctness of information in this document. Copyright by AUDI AG.

19.5 Connectors on multimedia system control unit -J650-

1 - Multi-pin connector, 18-pin, black (T18e) to TV tuner -R78- (analogue/hybrid)

2 - Multi-pin connector, 26-pin, green (T26e) to rear DVD changer -R162- / multimedia system display unit 1 -Y22- / multimedia system display unit 2 -Y23-

3 - Multi-pin connector, 26-pin, black (T26d) to additional connections unit for video and audio -R176- /voltage supply

Protected by copyright. Copying for private or commercial purposes, in part or in whole, is not permitted without the prior written consent of AUDI AG. AUDI AG does not guarantee or accept any liability with respect to the correctness of information in this document. Copyright by AUDI AG.

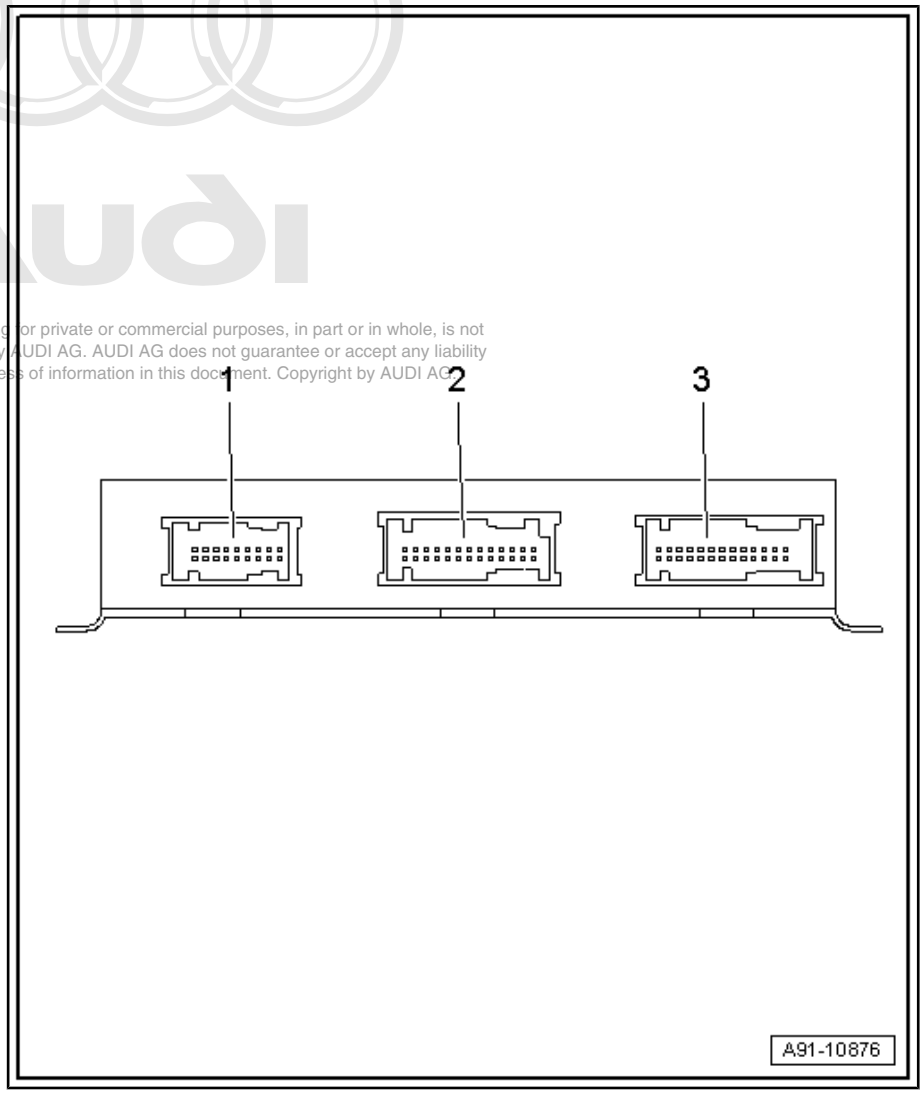

19.6 Wiring for multimedia system control unit -J650- /display units/DVD

1 - Multi-pin connector, 26-pin, green (T26e) at multimedia system control unit -J650-

2 - Multi-pin connector, 12-pin, black (T12u) to rear DVD changer -R162-

3 - Multi-pin connector, 12-pin, black (T12ac) to multimedia system display unit 1 -Y22-

4 - Multi-pin connector, 12-pin, black (T12ad) to multimedia system display unit 2 -Y23-

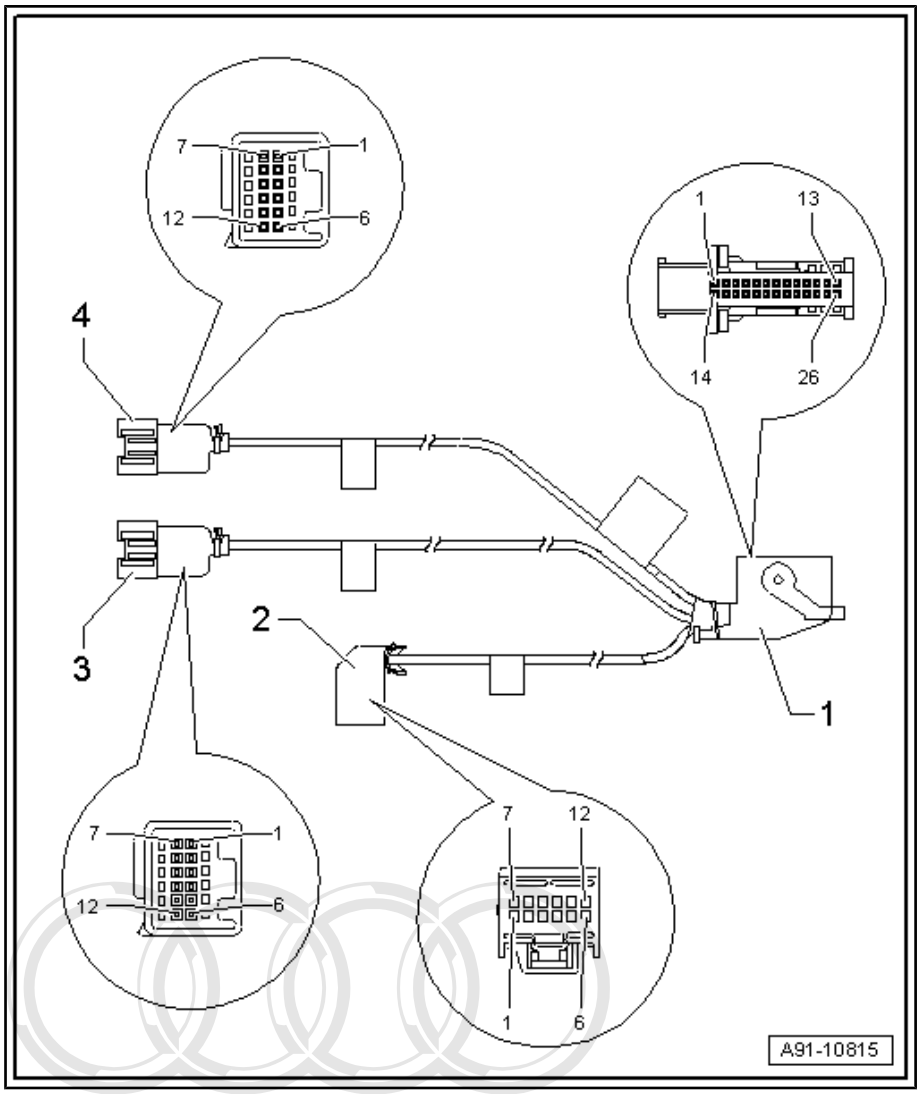

Protected by copyright. Copying for private or commercial purposes, in part or in whole, is not permitted unless authorised by AUDI AG. AUDI AG does not guarantee or accept any liability with respect to the correctness of information in this document. Copyright by AUDI AG.

Note

Contacts which are not listed are not used.

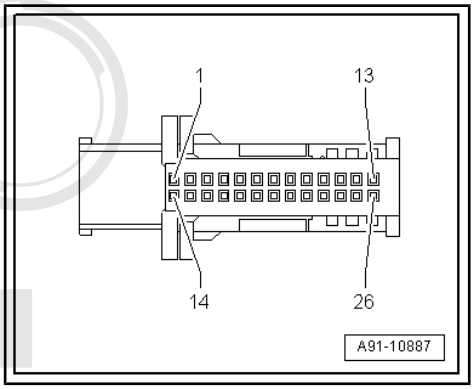

1 - Multi-pin connector, 26-pin, green (T26e)

1 - Terminal 30 to rear DVD changer -R162- , red

2 - Switched terminal 30 to rear DVD changer -R162- , orange

3 - IR-DATA to rear DVD changer -R162- , purple

4 - Screen earth (video) to rear DVD changer -R162- , black

5 - Video from rear DVD changer -R162- , white

6 - IR-DATA from multimedia system display unit 1 -Y22- , brown

7 - Screen earth (video) to multimedia system display unit 1 -Y22- , black

8 - Video to multimedia system display unit 1 -Y22- , white

9 - TxD from multimedia system display unit 2 -Y23- , blue

10 - IR-DATA from multimedia system display unit 2 -Y23- , brown

11 - Screen earth (video) to multimedia system display unit 2 -Y23- , black

12 - Video to multimedia system display unit 2 -Y23- , white

13 - RxD to multimedia system display unit 2 -Y23- , yellow

14 - Terminal 31/common screen to rear DVD changer -R162- , black

15 - TSENS to rear DVD changer -R162- , green

16 - Screen earth (audio) to rear DVD changer -R162- , black

17 - Audio (right-side) from rear DVD changer -R162- , white

18 - Audio (left-side) from rear DVD changer -R162- , white

19 - Terminal 31 to multimedia system display unit 2 -Y23- , black

20 - RxD to multimedia system display unit 1 -Y22- , yellow

21 - TxD from multimedia system display unit 1 -Y22- , blue

22 - Terminal 31 to multimedia system display unit 1 -Y22- , black

23 - Not used

24 - Not used

25 - Terminal 30 to multimedia system display unit 2 -Y23- , red

26 - Terminal 30 to multimedia system display unit 1 -Y22- , red

Protected by copyright. Copying for private or commercial purposes, in part or in whole, is not permitted unless authorised by AUDI AG. AUDI AG does not guarantee or accept any liability with respect to the correctness of information in this document. Copyright by AUDI AG.

2 - Multi-pin connector, 12-pin, black (T12u)

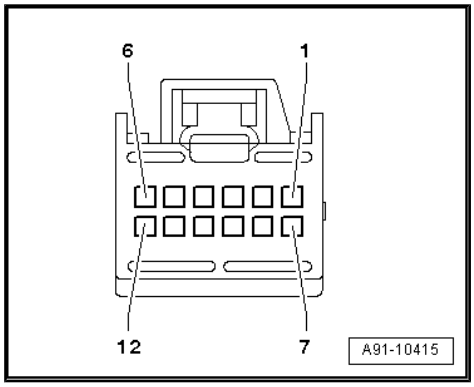

1 - Terminal 30 from multimedia system control unit -J650- , red
2 - IR-DATA from multimedia system control unit -J650- , purple
3 - Audio (right-side) from rear DVD changer -R162- , white
4 - Audio (left-side) from rear DVD changer -R162- , white
5 - Video from rear DVD changer -R162- , white
6 - Not used
7 - Terminal 31 from multimedia system control unit -J650- , black
8 - Switched terminal 30 from multimedia system control unit -J650- , orange
9 - TSENS from multimedia system control unit -J650- , green
10 - Screen earth (audio), black
11 - Screen earth (video), black
12 - Common screen, black

3 - Multi-pin connector, 12-pin, black (T12ac)

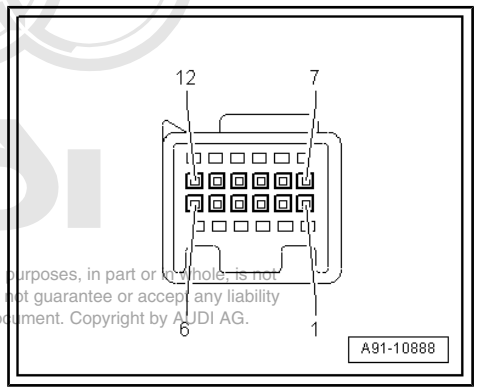

1 - Terminal 30 from multimedia system control unit -J650- , red
2 - TxD from multimedia system display unit 1 -Y22- , blue
3 - IR-DATA from multimedia system display unit 1 -Y22- , brown
4 - Not used
5 - Screen earth (video), black
6 - Not used
7 - Terminal 31 from multimedia system control unit -J650- , black
8 - RxD from multimedia system control unit -J650- , yellow
9 - Not used
10 - Not used
11 - Video from multimedia system control unit -J650- , white

otected by copyright. Copying for private or commercial purposes, in part or in whole, is not permitted unless authorised by AUDI AG. AUDI AG does not guarantee or accept any liability with respect to the correctness of information in this document. Copyright by AUDI AG.

4 - Multi-pin connector, 12-pin, black (T12ad)

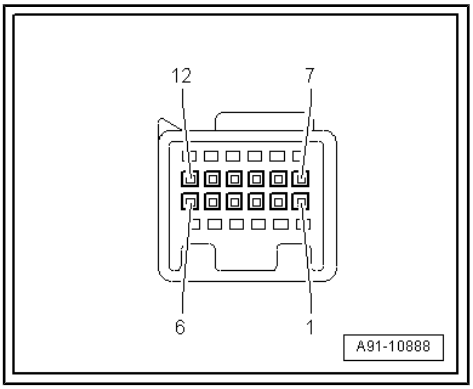

1 - Terminal 30 from multimedia system control unit -J650- , red

2 - TxD from multimedia system display unit 2 -Y23- , blue

3 - IR-DATA from multimedia system display unit 2 -Y23- , brown

4 - Not used

5 - Screen earth (video), black

6 - Not used

7 - Terminal 31 from multimedia system control unit -J650- , black

8 - RxD from multimedia system control unit -J650- , yellow

9 - Not used

10 - Not used

11 - Video from multimedia system control unit -J650- , white

Protected by copyright. Copying for private or commercial purposes, in part or in whole, is not permitted unless authorised by AUDI AG. AUDI AG does not guarantee or accept any liability with respect to the correctness of information in this document. Copyright by AUDI AG.

19.7 Wiring for multimedia system control unit/video connection/supply

1 - Multi-pin connector, 26-pin, black (T26d) at multimedia system control unit -J650-

2 - Multi-pin connector, 12-pin, black (T12an) to multimedia system headphones for right side -R124- / additional connections unit for video and audio -R176- (right-side)

3 - Multi-pin connector, 12-pin, black (T12am) to multimedia system headphones for left side -R123- / additional connections unit for video and audio -R176- (left-side)

4 - Multi-pin connector, 4-pin, black (T4ah), voltage supply

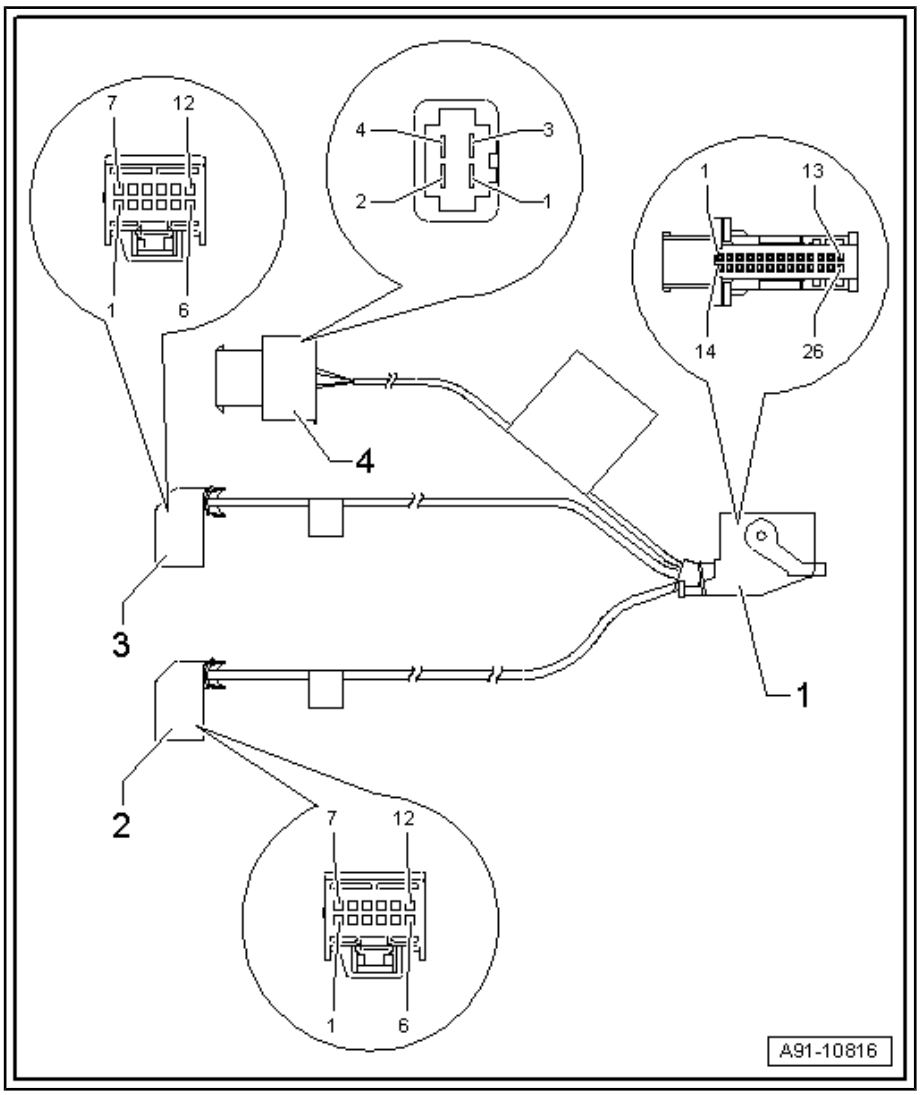

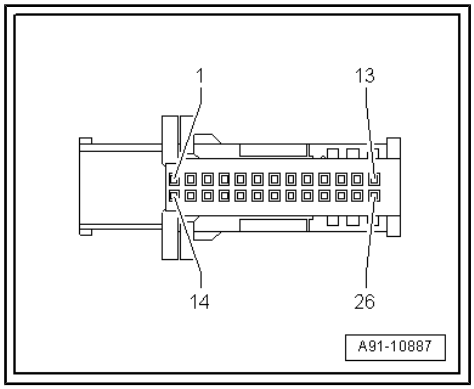

Note

Contacts which are not listed are not used.

1 - Multi-pin connector, 26-pin, black (T26d)

1 - Terminal 30, red

2 - Terminal 15, yellow/black

3 - Switched terminal 30, red/white

4 - AGFB multimedia system headphones for right side -R124- , red

5 - AGFB multimedia system headphones for left side -R123- , red

6 - Common screen, black/purple

7 - Screen earth, additional connections unit for video and audio -R176- (left-side), yellow

8 - Video from additional connections unit for video and audio -R176- (left-side), white

9 - Screen earth, additional connections unit for video and audio -R176- (left-side), black

10 - REM to additional connections unit for video and audio -R176- (left-side and right-side), white

11 - Audio (right-side) to multimedia system headphones for right side -R124- , blue

Reproduced by copyright. Copying for private or commercial purposes, in part or in whole, is not permitted unless authorised by AUDI AG. AUDI AG does not guarantee or accept any liability with respect to the correctness of information in this document. Copyright by AUDI AG.

12 - Audio (left-side) to multimedia system headphones for right side -R124- , green

13 - Screen earth, multimedia system headphones for right side -R124- , black

14 - Terminal 31, brown

15 - Audio (right-side) from additional connections unit for video and audio -R176- (right-side), grey

16 - Audio (left-side) from additional connections unit for video and audio -R176- (right-side), brown

17 - Screen earth, additional connections unit for video and audio -R176- (right-side), yellow

18 - Audio (right-side) to multimedia system headphones for left side -R123- , blue

19 - Audio (left-side) to multimedia system headphones for left side -R123- , green

20 - Audio (right-side) from additional connections unit for video and audio -R176- (left-side), grey

21 - Audio (left-side) from additional connections unit for video and audio -R176- (left-side), brown

22 - Not used

23 - Not used

24 - Not used

25 - Video from additional connections unit for video and audio -R176- (right-side), white

26 - ILL-ON to additional connections unit for video and audio -R176- (left-side and right-side), orange

2 - Multi-pin connector, 12-pin, black (T12an)

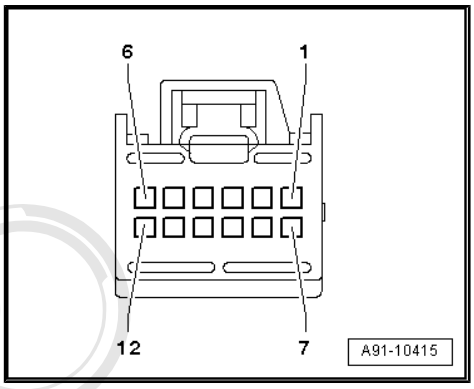

1 - AGFB to multimedia system headphones for right side -R124- , red

2 - Common screen, black

3 - REM from multimedia system control unit -J650- , white

4 - Screen earth, additional connections unit for video and audio -R176- (right-side), yellow

5 - Video from additional connections unit for video and audio -R176- (right-side), white

6 - Screen earth, additional connections unit for video and audio -R176- (right-side), black

7 - Audio (right-side) to multimedia system headphones for right side -R124- , blue

8 - Audio (left-side) to multimedia system headphones for right side -R124- , green

9 - Audio (right-side) from additional connections unit for video and audio -R176- (right-side), grey

10 - Audio (left-side) from additional connections unit for video and audio -R176- (right-side), brown

11 - Common screen, purple

12 - ILL-ON to additional connections unit for video and audio -R176- (right-side), orange

Audi
Protected by copyright. Copying for private or commercial purposes, in part or in whole, is not permitted unless authorised by AUDI AG. AUDI AG does not guarantee or accept any liability with respect to the correctness of information in this document. Copyright by AUDI AG.

3 - Multi-pin connector, 12-pin, black (T12am)

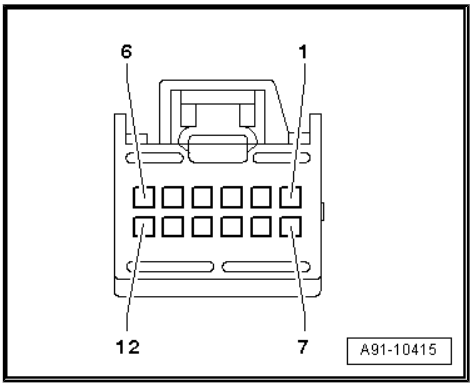

1 - AGFB to multimedia system headphones for left side -R123- , red

2 - Common screen, black

3 - REM from multimedia system control unit -J650- , white

4 - Screen earth, additional connections unit for video and audio -R176- (left-side), yellow

5 - Video from additional connections unit for video and audio -R176- (left-side), white

6 - Screen earth, additional connections unit for video and audio -R176- (left-side), black

7 - Audio (right-side) to multimedia system headphones for left side -R123- , blue

8 - Audio (left-side) to multimedia system headphones for left side -R123- , green

9 - Audio (right-side) from additional connections unit for video and audio -R176- (left-side), grey

10 - Audio (left-side) from additional connections unit for video and audio -R176- (left-side), brown

11 - Common screen, purple

12 - ILL-ON to additional connections unit for video and audio -R176- (left-side), orange

4 - Multi-pin connector, 4-pin, black (T4ah)

1 - Switched terminal 30 from current supply relay -J16- in relay and fuse holder in luggage compartment (right-side) (up to 08/06), red/white

- Switched terminal 30 from trailer detector control unit -J345- (from 09/06 onwards), red/white

2 - Terminal 31 from earth point in luggage compartment (right-side), brown

3 - Terminal 30 from communications fuse -S254- in relay and fuse holder in luggage compartment (right-side), red

4 - Terminal 15 from fuse 16 in fuse holder B -SB16- in fuse holder in dash panel (left-side), yellow/black

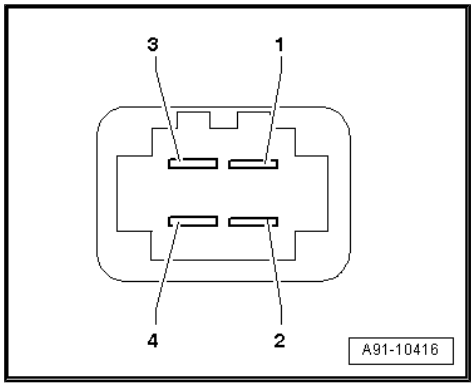

19.8 Wiring for multimedia system control unit -J650- / TV tuner -R78- (hybrid)

1 - Multi-pin connector, 18-pin, black (T18e) at multimedia system control unit -J650-

2 - Multi-pin connector, 20-pin, black (T20f) to TV tuner -R78- (hybrid)

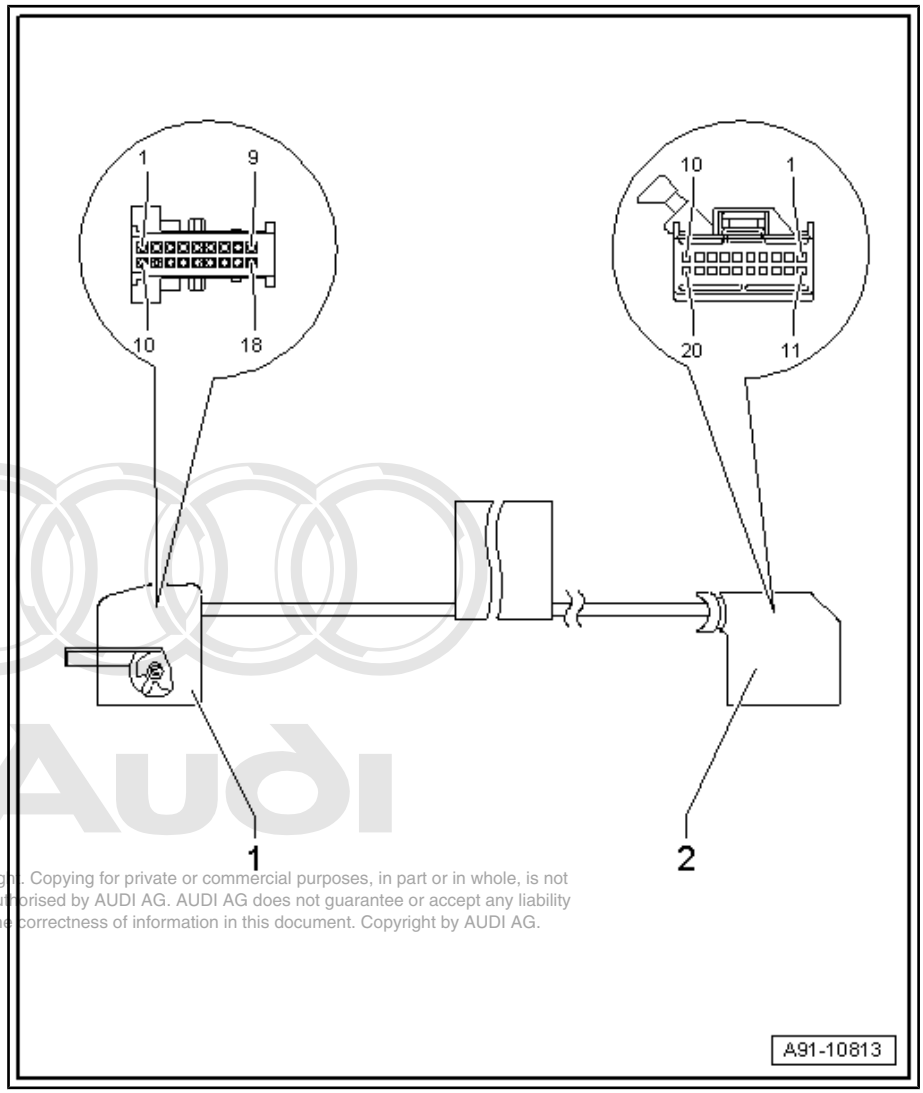

Protected by copyright. Copying for private or commercial purposes, in part or in whole, is not permitted unless authorised by AUDI AG. AUDI AG does not guarantee or accept any liability with respect to the correctness of information in this document. Copyright by AUDI AG.

Note

Contacts which are not listed are not used.

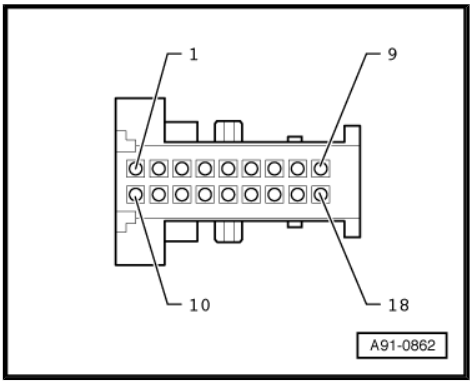

1 - Multi-pin connector, 18-pin, black (T18e)

1 - I/O switch PIN to TV tuner -R78- , red

2 - Screen earth (audio), black

3 - Audio output (left-side) to TV tuner -R78- , yellow

4 - Audio output (right-side) to TV tuner -R78- , blue

5 - Screen earth (video), black

6 - Screen earth (video), orange

7 - Screen earth (audio), green

8 - Screen earth (video), black

9 - Not used

10 - Not used

11 - Audio input (left-side) from TV tuner -R78- , white

12 - Audio input (right-side) from TV tuner -R78- , black

13 - Common screen, black

14 - Video input from TV tuner -R78- , white

15 - Video output to TV tuner -R78- , white

Protected by copyright. Copying for private or commercial purposes, in part or in whole, is not permitted unless authorised by AUDI AG. AUDI AG does not guarantee or accept any liability with respect to the correctness of information in this document. Copyright by AUDI AG.

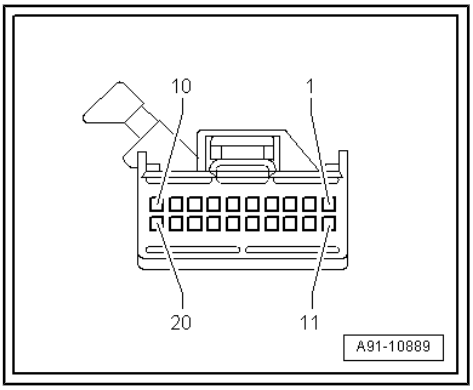

2 - Multi-pin connector, 20-pin, black (T20f)

1 - Terminal 30, red/yellow

2 - Terminal 31, brown

3 - Open circuit diagnostic lead, white/yellow

4 - Screen earth (video), black

5 - Video output to multimedia system control unit -J650- , white

6 - Screen earth (audio), black

7 - Audio output (left-side) to multimedia system control unit -J650- , white

8 - Audio output (right-side) to multimedia system control unit -J650- , black

9 - Screen earth (audio), black

10 - Audio input (left-side) from multimedia system control unit -J650- , yellow

11 - Audio input (right-side) from multimedia system control unit -J650- , blue

12 - Video input from multimedia system control unit -J650- , white

13 - Screen earth (video), black

20 - I/O switch PIN to TV tuner -R78- , red

19.9 Connectors on TV tuner -R78- (hybrid)

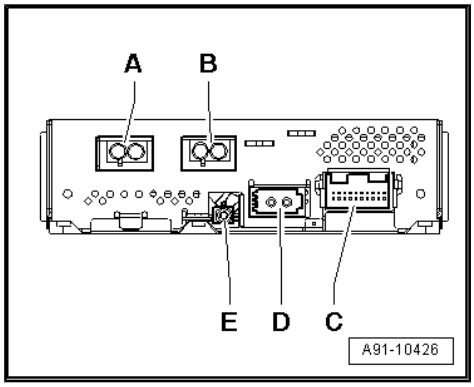

TV tuner -R78-

A - Connection TV1/TV2 (brown) from aerial amplifier -R24-

B - Connection TV3/TV4 (green) from aerial amplifier -R24-

C - Multi-pin connector, 20-pin, red (T20f)

D - MOST bus

E - FBAS output (green) to control unit for front display and information control panel -J523- / reversing camera system control unit -J772-

Protected by copyright. Copying for private or commercial purposes, in part or in whole, is not permitted unless authorized by AUDI AG. AUDI AG does not guarantee or accept any liability with respect to the correctness of information in this document. Copyright by AUDI AG.

Note

Contacts which are not listed are not used.

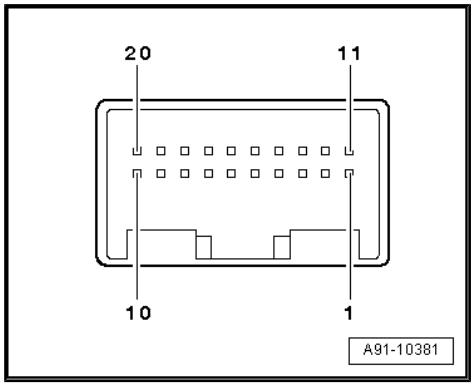

C - Multi-pin connector, 20-pin, red (T20f)

1 - Terminal 30, red/yellow

2 - Terminal 31, brown

3 - Open circuit diagnostic lead, white/yellow

4 - Screen earth (video), black

5 - Video output to multimedia system control unit -J650- (RSE), white

6 - Screen earth (audio), black

7 - Audio output (left-side) to multimedia system control unit -J650- (RSE), white

8 - Audio output (right-side) to multimedia system control unit -J650- (RSE), black

9 - Screen earth (audio), black

10 - Audio input (left-side) 1 from multimedia system control unit -J650- (RSE), yellow

11 - Audio input (right-side) 1 from multimedia system control unit -J650- (RSE), blue

12 - Video input 1 from multimedia system control unit -J650- (RSE), white

13 - Screen earth (video), black

14 - Screen earth (not used)

15 - Screen earth (not used)

16 - Audio input (left-side) 2 (not used)

17 - Audio input (right-side) 2 (not used)

18 - Video input (not used)

19 - Screen earth (not used)

20 - I/O switch PIN from multimedia system control unit -J650- (RSE), red

D - MOST bus

1 - Input

2 - Output

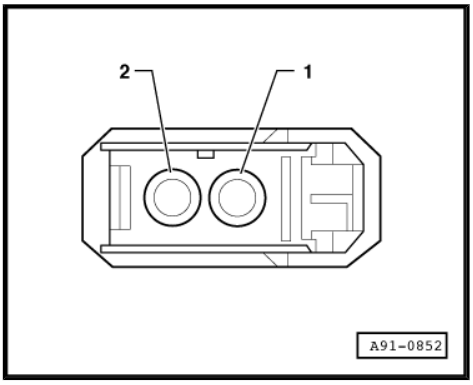

19.10 Wiring for multimedia system control unit -J650- / TV tuner -R78- (analogue)

1 - Multi-pin connector, 18-pin, black (T18e) at multimedia system control unit -J650-

2 - Multi-pin connector, 20-pin, black (T20f) to TV tuner -R78- (analogue)

Copyright © Audi AG. Copying for private or commercial purposes, in part or in whole, is not permitted unless authorised by AUDI AG. AUDI AG does not guarantee or accept any liability with respect to the correctness of information in this document. Copyright by AUDI AG.

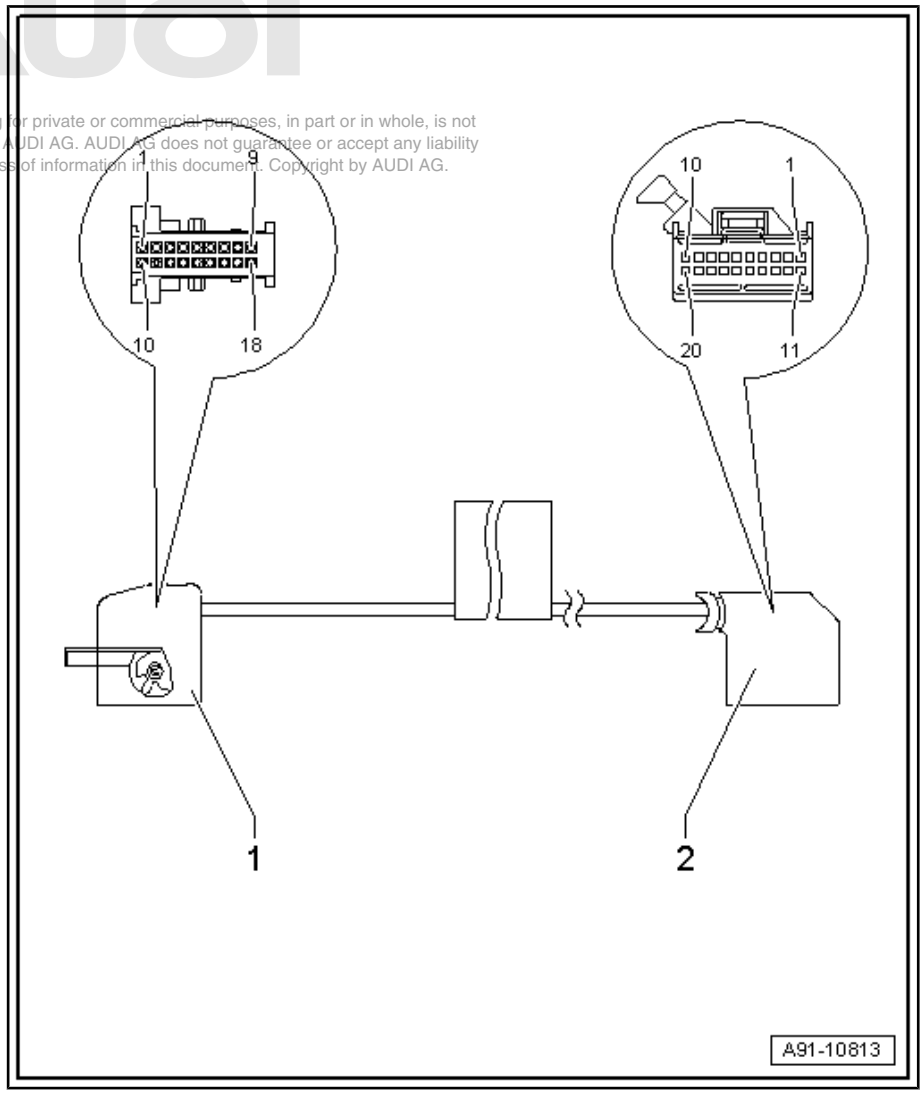

Note

Contacts which are not listed are not used.

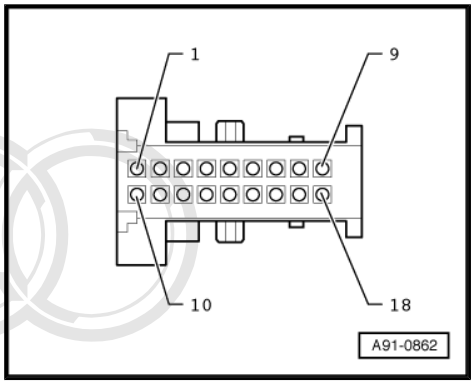

1 - Multi-pin connector, 18-pin, black (T18e)

1 - I/O switch PIN to TV tuner -R78- , red

2 - Screen earth (audio), black

3 - Audio output (left-side) to TV tuner -R78- , yellow

4 - Audio output (right-side) to TV tuner -R78- , blue

5 - Screen earth (video), black

6 - Screen earth (video), orange

7 - Screen earth (audio), green

8 - Screen earth (video), black

9 - Not used

10 - Not used

11 - Audio input (left-side) from TV tuner -R78- , white

12 - Audio input (right-side) from TV tuner -R78- , black

13 - Common screen, black

14 - Video input from TV tuner -R78- , white

15 - Video output to TV tuner -R78- , white

Protected by copyright. Copying for private or commercial purposes, in part or in whole, is not permitted unless authorised by AUDI AG. AUDI AG does not guarantee or accept any liability with respect to the correctness of information in this document. Copyright by AUDI AG.

2 - Multi-pin connector, 20-pin, black (T20f)

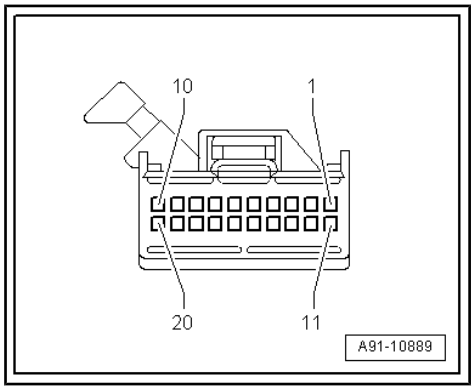

1 - Terminal 30, red/yellow

2 - Terminal 31, brown

3 - Open circuit diagnostic lead, white/yellow

4 - Video output to multimedia system control unit -J650- , white

5 - Audio output (left-side) to multimedia system control unit -J650- , white

6 - Screen earth (audio), black

7 - Audio output (right-side) to multimedia system control unit -J650- , black

8 - Screen earth (video), black

9 - Screen earth (audio), black

10 - Audio input (left-side) from multimedia system control unit -J650- , yellow

11 - Audio input (right-side) from multimedia system control unit -J650- , blue

12 - Video input from multimedia system control unit -J650- , white

13 - Screen earth (video), black

20 - I/O switch PIN to TV tuner -R78- , red

19.11 Connectors on TV tuner -R78- (analogue)

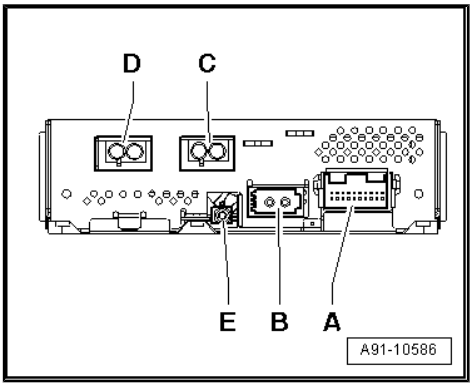

TV tuner -R78-

A - Multi-pin connector, 20-pin, red (T20f)

B - MOST bus

C - Connection TV3/TV4 (green) from aerial amplifier -R24- / digital TV tuner -R171-

D - Connection TV1/TV2 (brown) from aerial amplifier -R24- / digital TV tuner -R171-

E - FBAS output (green) to control unit for front display and information control panel -J523-

Note

Contacts which are not listed are not used.

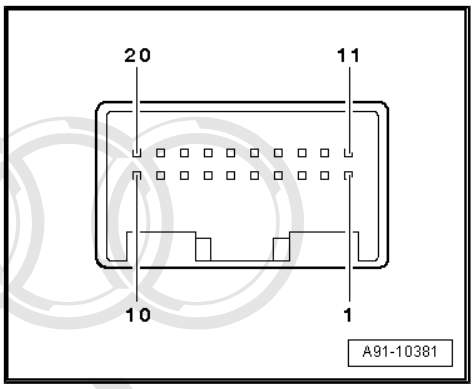

A - Multi-pin connector, 20-pin, red (T20f)

1 - Terminal 30, red/yellow

2 - Terminal 31, brown

3 - Open circuit diagnostic lead, white/yellow

4 - Video output to multimedia system control unit -J650- (RSE), white

5 - Audio output to multimedia system control unit -J650- (RSE), white

6 - Screen earth (audio), black

7 - Audio output (right-side) to multimedia system control unit -J650- (RSE), black

8 - Screen earth (video), black

9 - Screen earth (audio), black

10 - Audio input (left-side) 1 from multimedia system control unit -J650- (RSE), yellow

11 - Audio input (right-side) 1 from multimedia system control unit -J650- (RSE), blue

12 - Video input 1 from multimedia system control unit -J650- (RSE), white

13 - Screen earth 1 (video), black

14 - Screen earth 2 (not used)

15 - Screen earth 2 (not used)

16 - Audio input (left-side) 2 (not used)

17 - Audio input (right-side) 2 (not used)

18 - Video input 2 (not used)

19 - Screen earth 2 (not used)

20 - I/O switch PIN from multimedia system control unit -J650- (RSE), red

Protected by copyright. Copying for private or commercial purposes, in part or in whole, is not permitted unless authorised by AUDI AG. AUDI AG does not guarantee or accept any liability with respect to the correctness of information in this document. Copyright by AUDI AG.

B - MOST bus

1 - Input

2 - Output

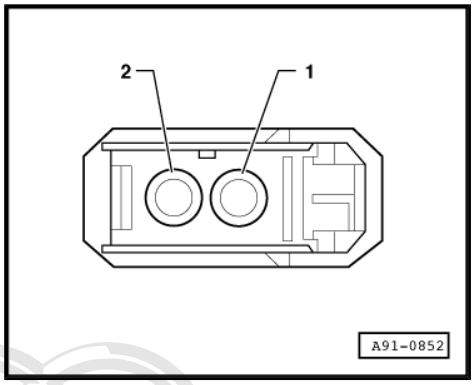

19.12 Pin assignment on wiring for display unit underneath seat

Note

Contacts which are not listed are not used.

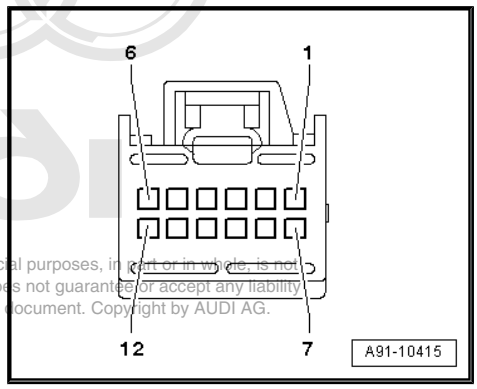

Multi-pin connector, 12-pin, black (T12ac/T12ad)

1 - Terminal 30, red

2 - TxD, blue

3 - IR-DATA, brown

4 - Not used

5 - Screen earth (video), black

6 - Not used

7 - Terminal 31, black

8 - RxD, yellow

9 - Not used

10 - Not used

11 - Video, white

Protected by copyright. Copying for private or commercial purposes, in part or in whole, is not permitted unless authorised by AUDI AG. AUDI AG does not guarantee or accept any liability with respect to the correctness of information in this document. Copyright by AUDI AG.

19.13 Overview of fitting locations

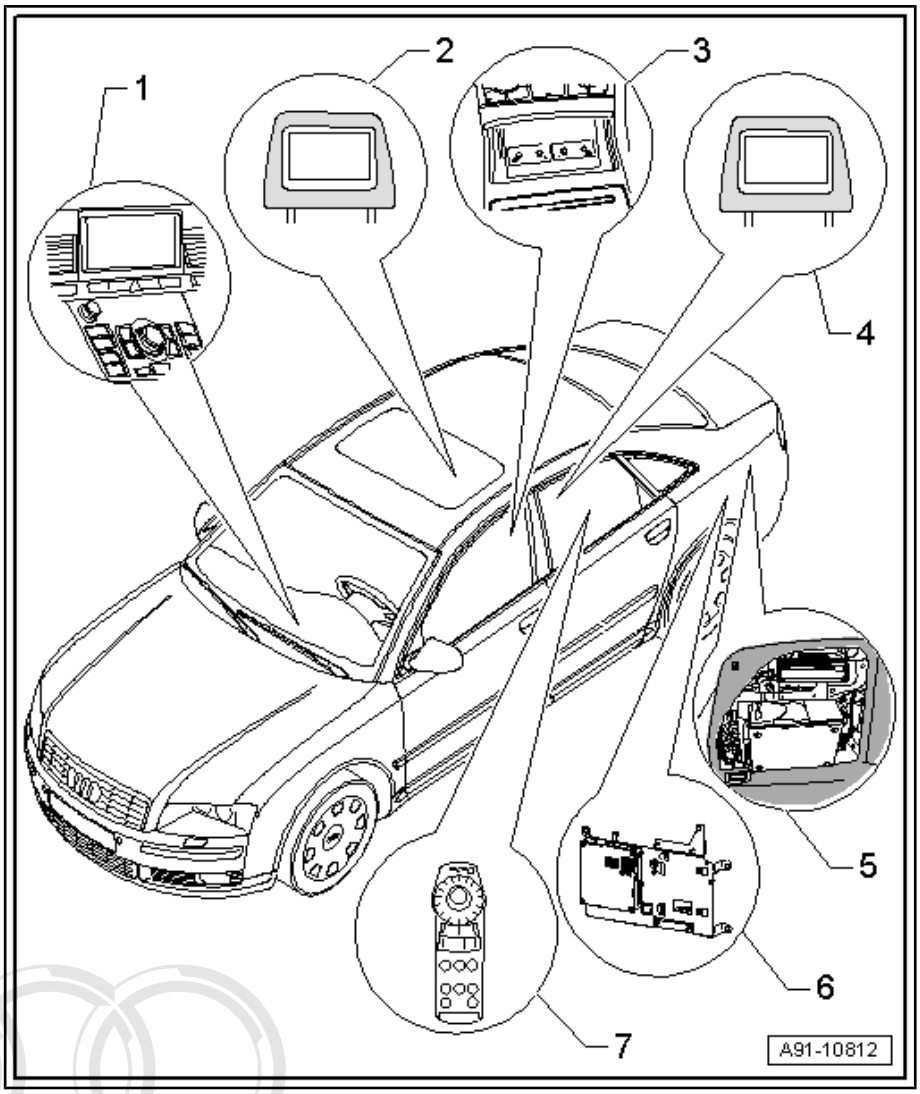

1 - Display unit for front information display and operating unit control unit -J685-

- ❑ In dash panel (centre)

- Multimedia system operating unit -E380-

- ❑ In centre console

2 - Multimedia system display unit 2 -Y23-

- ❑ In head restraint of front seat (right-side)
- ❑ Removing and installing ⇒ page 308

3 - Additional connections unit for audio and video -R176-

- ❑ In rear centre console
- ❑ Removing and installing ⇒ page 307

4 - Multimedia system display unit 1 -Y22-

- ❑ In head restraint of front seat (left-side)
- ❑ Removing and installing ⇒ page 308

5 - Rear DVD changer -R162-

- ❑ Behind luggage compartment side trim (left-side)
- ❑ Pin assignment (DVC 03) ⇒ page 289
- ❑ Pin assignment (DVC 06) ⇒ page 289
- ❑ Removing and installing ⇒ page 306

- Multimedia system control unit -J650-

- ❑ Pin assignment ⇒ page 291
- ❑ Removing and installing ⇒ page 306

6 - TV tuner -R78-

- ❑ Behind luggage compartment side trim (left-side)
- ❑ Pin assignment (hybrid) ⇒ page 300
- ❑ Pin assignment (analogue) ⇒ page 303
- ❑ Removing and installing ⇒ page 229

7 - Remote control for rear DVD changer -R162-

- ❑ In rear centre armrest storage compartment
- ❑ Removing and installing storage compartment ⇒ page 311

Protected by copyright. Copying for private or commercial purposes, in part or in whole, is not permitted unless authorised by AUDI AG. AUDI AG does not guarantee or accept any liability with respect to the correctness of information in this document. Copyright by AUDI AG.

19.14 Removing and installing multimedia system control unit -J650-

– Switch off all electrical equipment.

– Remove ignition key.

Removing

The rear DVD changer -R162- does not have to be removed.

– Open left-side luggage compartment storage area.

– Swivel rear DVD changer -R162- into luggage compartment.

– Use a small screwdriver to unclip damper -1- and swivel retainer with rear DVD changer -R162- -5- into luggage compartment as far as it will go.

– Unscrew bolts -2- and -4- (3 Nm) at multimedia system control unit -J650- -3-.

– Unplug connectors at multimedia system control unit -J650- -3-.

– Remove multimedia system control unit -J650- -3- from retainer -5-.

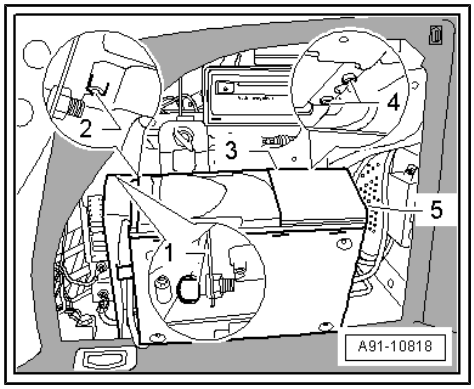

Installing

– Installation is performed in reverse sequence.

19.15 Removing and installing rear DVD changer -R162-

– Switch off all electrical equipment.

– Remove ignition key.

Removing

– Open left-side luggage compartment storage area.

– Swivel rear DVD changer -R162- into luggage compartment.

– Remove DVD magazine from rear DVD changer -R162- .

– Unscrew bolts -1- and -2- (3 Nm) and detach rear DVD changer -R162- -3- from mounting frame.

– Unplug connector -4- at rear DVD changer -R162- -3-.

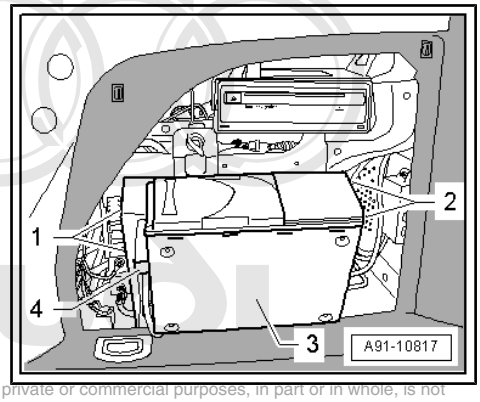

Installing

If a DVC 06 is installed in place of a DVC 03, the wiring between the rear DVD changer -R162- and the connector socket (T12u) must be removed. This wiring is no longer required when installing a DVC 06. The rear DVD changer -R162- is connected up via the connector T12u. Also use different spacer sleeves and bolts if necessary.

– Check installation position at rear DVD changer -R162- .

Protected by copyright. Copying for private or commercial purposes, in part or in whole, is not permitted unless authorised by AUDI AG. AUDI AG does not guarantee or accept any liability with respect to the correctness of information in this document. Copyright by AUDI AG.

Positioners -2- and -4- must be set to “V”.

– Remove transport safeguards -1-, -3- and -5-.

– Installation is performed in reverse sequence.

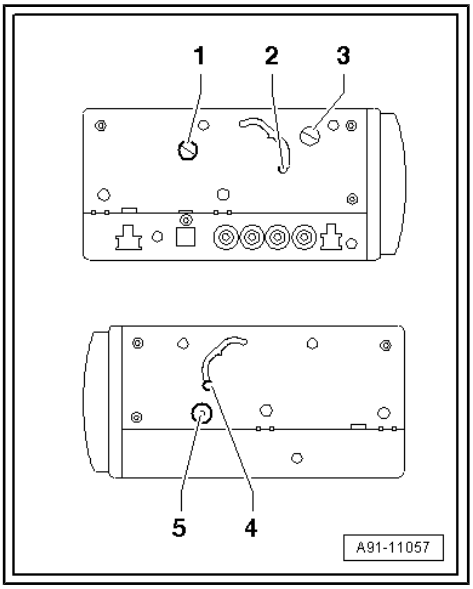

19.16 Removing and installing retainer for rear DVD changer -R162-

If control units fitted behind the rear DVD changer -R162- have to be removed (radio -R- / digital radio -R147- / satellite radio -R146-), the retainer for the rear DVD changer -R162- must be removed. The rear DVD changer -R162- and control units attached to the retainer need not be removed.

Protected by copyright. Copying for private or commercial purposes, in part or in whole, is not permitted unless authorised by AUDI AG. AUDI AG does not guarantee or accept any liability with respect to the correctness of information in this document. Copyright by AUDI AG.

– Switch off all electrical equipment.

– Remove ignition key.

Removing

– Open left-side luggage compartment storage area.

– Swivel rear DVD changer -R162- into luggage compartment.

– Unscrew bolt -1- (6 Nm) and nuts -2-, -4- and -5- (6 Nm).

– Swivel retainer into luggage compartment.

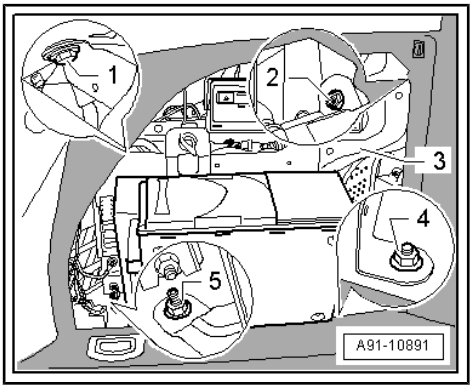

Installing

– Installation is performed in reverse sequence.

19.17 Removing and installing additional connections unit for video and audio -R176-

– Switch off all electrical equipment.

– Remove ignition key.

Removing

– Remove rear storage compartment ⇒ General body repairs, interior; Rep. Gr. 68 .

The additional connections unit for video and audio -R176- -1- has sensitive retaining tabs -arrows-.

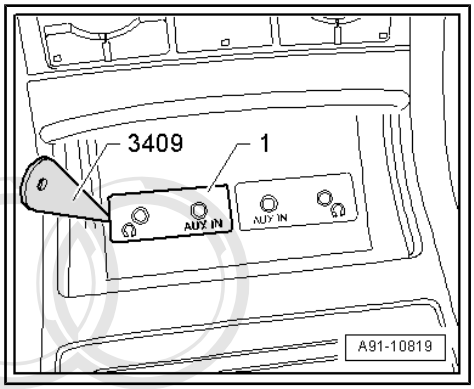

– Carefully unclip additional connections unit for video and audio -R176- -1- at retaining tabs -arrows- from behind.
– Pull additional connections unit for video and audio -R176- -1- out of storage compartment.
– Unplug connector on back of additional connections unit for video and audio -R176- -1-.

Installing

– Installation is performed in reverse sequence.

19.18 Removing and installing display units in head restraints

19.18.1 Removing and installing multimedia system display unit 1 -Y22-

Protected by copyright. Copying for private or commercial purposes, in part or in whole, is not permitted unless authorised by AUDI AG. AUDI AG does not guarantee or accept any liability with respect to the correctness of information in this document. Copyright by AUDI AG.

The procedure for removing and installing multimedia system display unit 1 -Y22- and multimedia system display unit 2 -Y23- is the same.

– Switch off all electrical equipment.
– Remove ignition key.

Removing

Multimedia system display unit 1 -Y22- is engaged with mounting frame in head restraint.

For this purpose two grooves -2- are provided on both sides of multimedia system display unit 1 -Y22- and two tabs -1- on mounting frame in head restraint.

Press both tabs evenly with a flat tool.

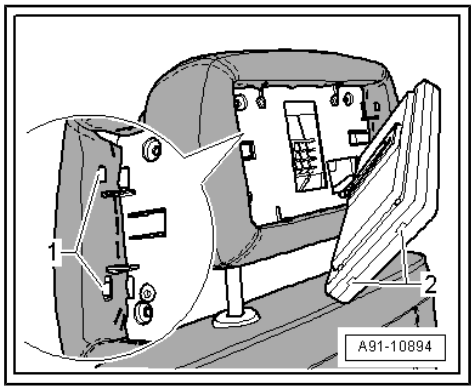

Suitable tools are commercially available plastic spatulas -1- with the following dimensions

a = approx. 70 mm

b = approx. 100 mm

Thickness = max. 0.5 mm

All edges rounded

Do not damage leather or fabric head restraint cover and avoid pressure marks.

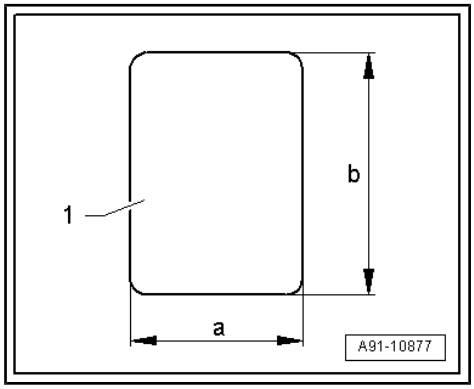

– Press in plastic spatulas -1- between head restraint -2- and multimedia system display unit 1 -Y22- -3- in direction of -arrow A- until tabs -arrows B- are pushed back.

Apply gentle sideways pressure to plastic spatula -1- to swivel multimedia system display unit 1 -Y22- -3- out of head restraint -2-.

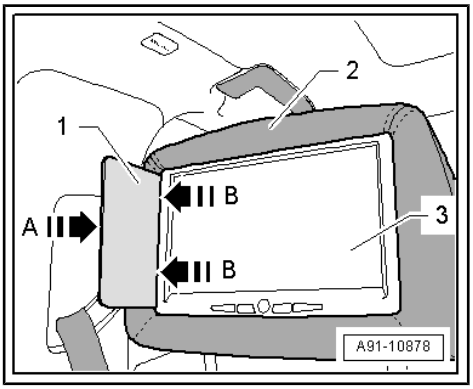

– Unplug connector -2- in head restraint -1- and detach multimedia system display unit 1 -Y22- -3-.

Installing

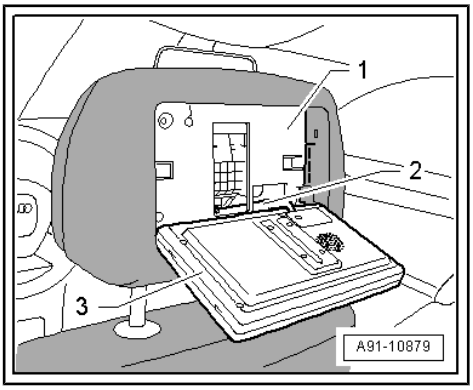

– Plug in connector -2-.

– Press multimedia system display unit 1 -Y22- -3- evenly into head restraint -1- until it engages audibly.

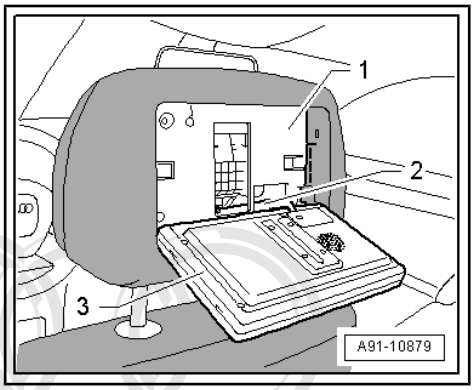

19.18.2 Removing and installing display unit wiring in backrest

For removing and and installing the display unit wiring to the multimedia system display unit 1 -Y22- the bottom backrest cover must be removed.

– Switch off all electrical equipment.

– Remove ignition key.

Protected by copyright. Copying for private or commercial purposes, in part or in whole, is not permitted unless authorised by AUDI AG. AUDI AG does not guarantee or accept any liability with respect to the correctness of information in this document. Copyright by AUDI AG.

Removing

– Remove the bottom backrest cover ⇒ General body repairs, interior; Rep. Gr. 72 .

– Remove multimedia system display unit 1 -Y22- in head restraint ⇒ page 283 .

Display unit wiring is fitted in rail of head restraint. If the display unit wiring is defective, it must be unplugged at the bottom connector.

– Unplug connector of black display unit wiring at bottom of seat and disconnect individual contacts at connector housing.

– Cut through cable ties along length of wiring in backrest -arrows-.

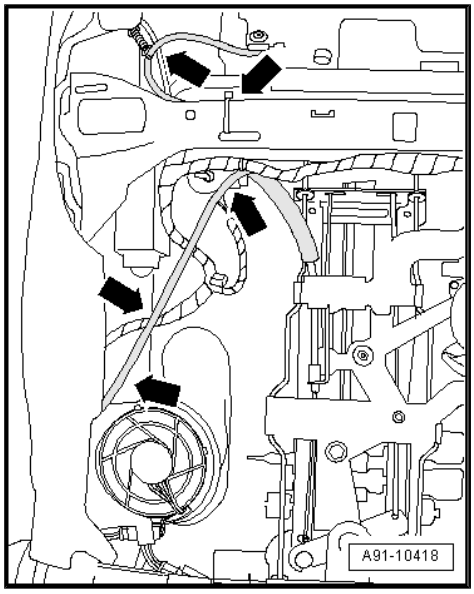

Note

For subsequent fitting of the new display unit wiring, it is helpful to take a photograph or make a drawing of the wire routing in the backrest prior to removal.

The display unit wiring is routed along the seat wiring harness in the bottom section of the seat.

– Cut through all the cable ties.

– Pull display unit wiring -arrows- upwards out of head restraint.

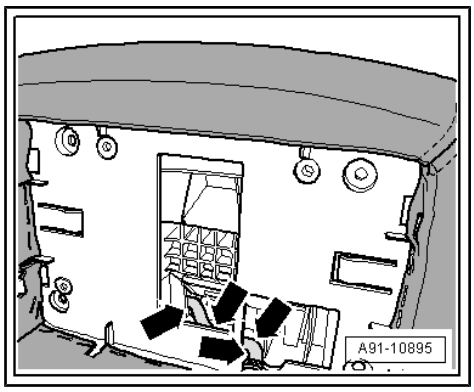

Installing

The display unit wiring is supplied without the bottom connector.

– Guide the free end of the display unit wiring -arrows- through the head restraint.

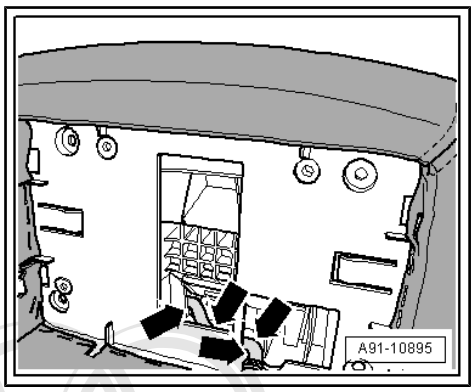

Protected by copyright. Copying for private or commercial purposes, in part or in whole, is not permitted unless authorised by AUDI AG. AUDI AG does not guarantee or accept any liability with respect to the correctness of information in this document. Copyright by AUDI AG.

– Mark on display unit wiring

  dimension a = 80 mm

and

  dimension b = 230 mm.

The dimensions given represent the securing points. Also refer to “old” display unit wiring.

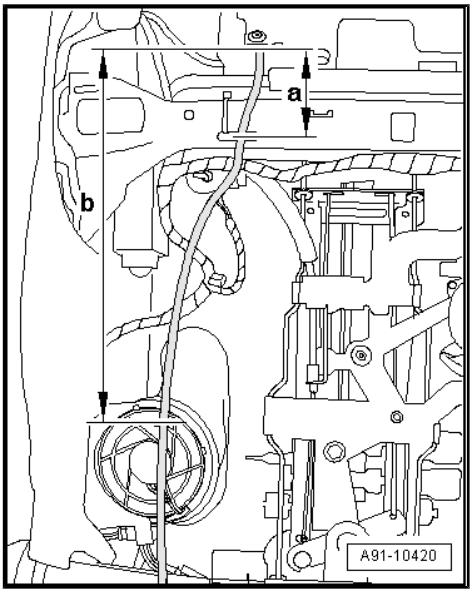

– Secure display unit wiring at “dimension a” to spring (top left) -arrow 1-.
– Make a loop and secure display unit wiring at “dimension b” on seat wiring harness -arrow 3- from the rear.
– Secure display unit wiring to backrest metal panel -arrow 2-.
– It is important to ensure that display unit wiring from end of head restraint rail to securing point -arrow 2- can follow movements of adjustable active head restraint without becoming trapped or tensioned.

Protected by copyright. Copying for private or commercial purposes, in part or in whole, is not permitted unless authorised by AUDI AG. AUDI AG does not guarantee or accept any liability with respect to the correctness of information in this document. Copyright by AUDI AG.

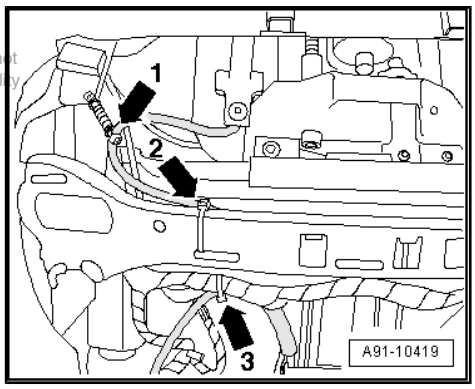

– Route display unit wiring on backrest wiring harness and seat wiring harness -arrows- further, as far as connector on seat wiring harness.

Fit 12-pin connector to display unit wiring after completing work on seat.

Pin assignment ⇒ page 304 .

– Perform further installation in reverse sequence.

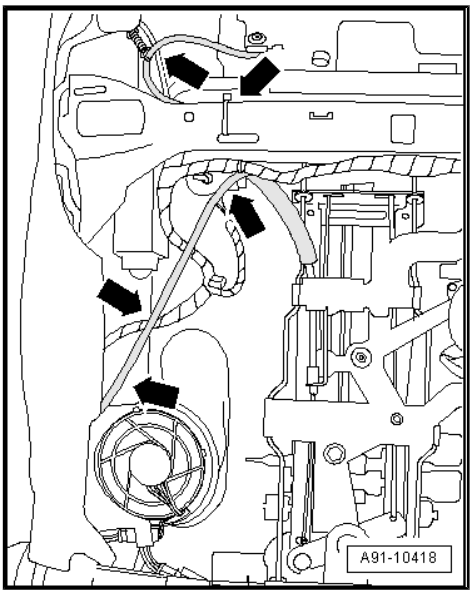

19.19 Removing and installing storage tray for remote controls

Special tools and workshop equipment required

♦ Removal wedge -3409-

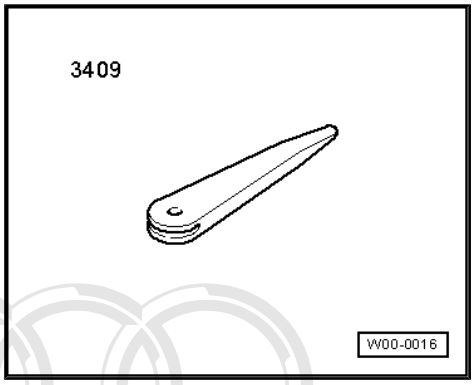

– Switch off all electrical equipment.
– Remove ignition key.

Removing

The storage tray is bonded to the storage compartment in the rear armrest.

– Take out remote controls -1- and -2-.
– Mask the edges to protect the centre armrest.
– Carefully lever the storage tray out of the storage compartment -arrows- using removal wedge -3409- .

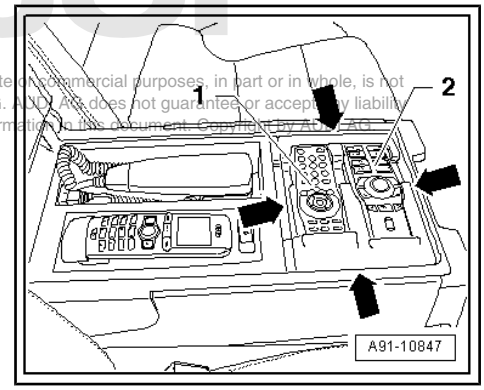

Installing

– Apply adhesive to bottom sides of storage tray.
– Carefully press storage tray into storage compartment until upper edges of tray and storage compartment are flush.
– Remove surplus adhesive if necessary.

Protected by copyright. Copying for private or commercial purposes, in part or in whole, is not permitted unless authorised by AUDI AG. AUDI AG does not guarantee or accept any liability with respect to the correctness of information in this document. Copyright by AUDI AG.

20 RSE "light" (Rear Seat Entertainment system) - (up to model year 2006)

20.1 General notes

The “Rear Seat Entertainment system” "light" consists of:

- Rear DVD changer -R162- with remote control
- Display units in head restraints of front seats
- Headphone connections in rear centre console

Audio and video signals from rear DVD changer -R162- are only reproduced via display units in head restraints and headphone connections in rear centre console.

The system has no connection to the MMI and the sound system of the vehicle.

Additional information ⇒ Operating instructions RSE "light" .

20.2 RSE system "light" - layout

1 - Multimedia system display unit 1 -Y22- in head restraint of front seat (left-side)

2 - Multimedia system display unit 2 -Y23- in head restraint of front seat (right-side)

3 - Driver side volume button -E374- / multimedia system headphones for left side -R123- in rear centre console

4 - Front passenger side volume button -E375- / multimedia system headphones for right side -R124- in rear centre console

5 - Multimedia system signal splitter -R181- behind luggage compartment side trim (left-side)

6 - Rear DVD changer -R162- behind luggage compartment side trim (left-side)

7 - Multi-pin connector (T4ah, black), connection to vehicle wiring harness behind luggage compartment side trim (left-side)

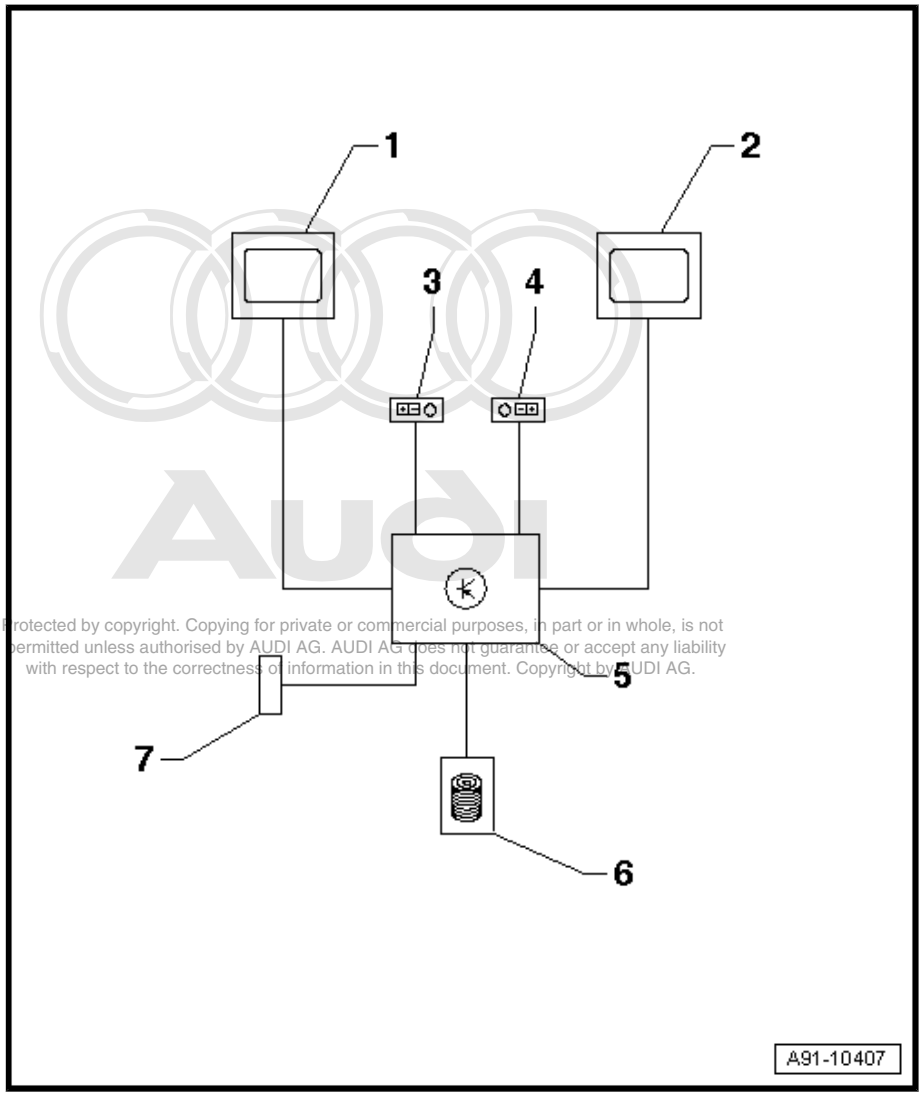

Protected by copyright. Copying for private or commercial purposes, in part or in whole, is not permitted unless authorised by AUDI AG. AUDI AG does not guarantee or accept any liability with respect to the correctness of information in this document. Copyright by AUDI AG.

20.3 Connectors on rear DVD changer -R162-

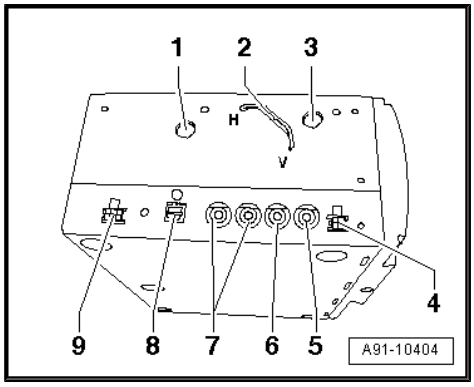

Note

Contacts which are not listed are not used.

Rear DVD changer -R162-

1 - Transport safeguard (removed)

2 - Installation position (must always be set to “V”)

3 - Transport safeguard (removed)

4 - Remote - not used

5 - Video output 2 (not used)

6 - Video output 1 (yellow) to multimedia system signal splitter -R181-

7 - Audio output (white/red) to multimedia system signal splitter -R181-

8 - SPDIF (not used)

9 - Power supply (T6ag), black to multimedia system signal splitter -R181-

20.4 Connectors on multimedia system signal splitter -R181-

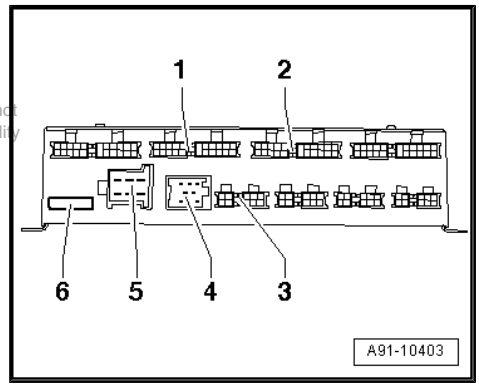

Note

Protected by copyright. Copying for private or commercial purposes, in part or in whole, is not permitted unless authorised by AUDI AG. AUDI AG does not guarantee or accept any liability with respect to the correctness of information in this document. Copyright by AUDI AG.

Contacts which are not listed are not used.

Multimedia system signal splitter -R181-

1 - Connections to multimedia system display unit 1 -Y22- (10af)/ multimedia system headphones for left side -R123- , black (T12ae)

2 - Connections to multimedia system display unit 2 -Y23- (10ag)/ multimedia system headphones for right side -R124- , black (T12af)

3 - Multi-pin connector, 4-pin, black (T4ai), voltage supply to/for rear DVD changer -R162-

- Multi-pin connector, 6-pin (T6ai), audio/video from rear DVD changer -R162-

4 - Multi-pin connector, 8-pin, CAN bus - not used

5 - Multi-pin connector (voltage supply), 6-pin, black (T6ah)

6 - Fuse for unit

20.5 Pin assignment on voltage supply wiring

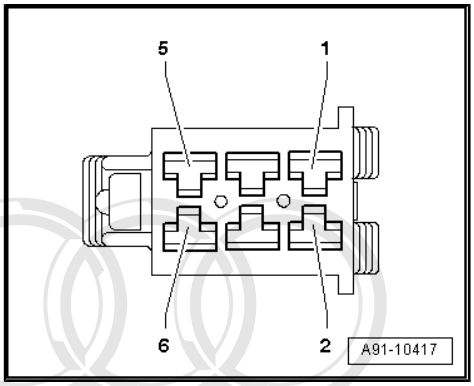

Note

Contacts which are not listed are not used.

Multi-pin connector, 6-pin, black (T6ah) to multimedia system signal splitter -R181-

1 - Terminal 30
2 - Terminal 31
3 - Switched terminal 30
4 - Not used
5 - Terminal 15

Multi-pin connector, 4-pin, black (T4ah) to vehicle wiring harness

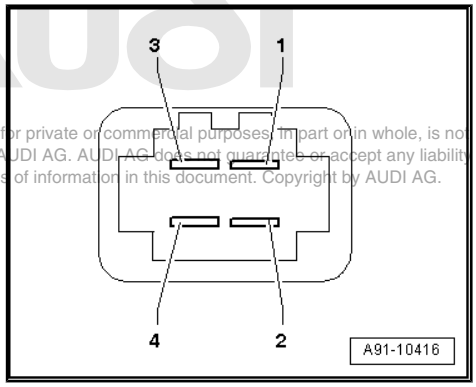

1 - Switched terminal 30 from current supply relay -J16- in relay and fuse holder in luggage compartment (right-side)
2 - Terminal 31 from earth point, luggage compartment (right-side)
3 - Terminal 30 from communications fuse -S254- in relay and fuse holder in luggage compartment (right-side)
4 - Terminal 15 from fuse 16 on fuse holder B -SB16- in fuse holder in dash panel (left-side)

Protected by copyright. Copying for private or commercial purposes, impart or in whole, is not permitted unless authorised by AUDI AG. AUDI AG does not guarantee or accept any liability with respect to the correctness of information in this document. Copyright by AUDI AG.

20.6 Pin assignment on wiring for display unit underneath seat

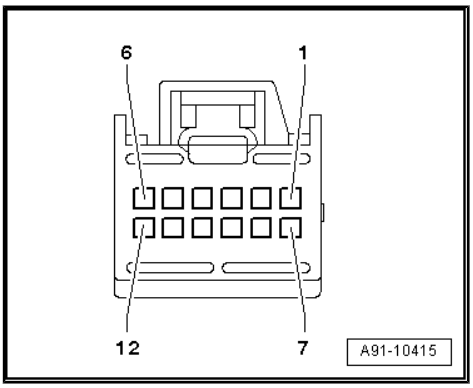

Note

Contacts which are not listed are not used.

Multi-pin connector, 12-pin, black (T12ab/T12ae)

1 - Terminal 30, red
2 - TxD, blue
3 - IR-DATA, brown
4 - Not used
5 - Screen earth (video)
6 - Not used
7 - Terminal 31, black
8 - RxD, yellow
9 - Not used
10 - Not used
11 - Video, white

20.7 Overview of fitting locations

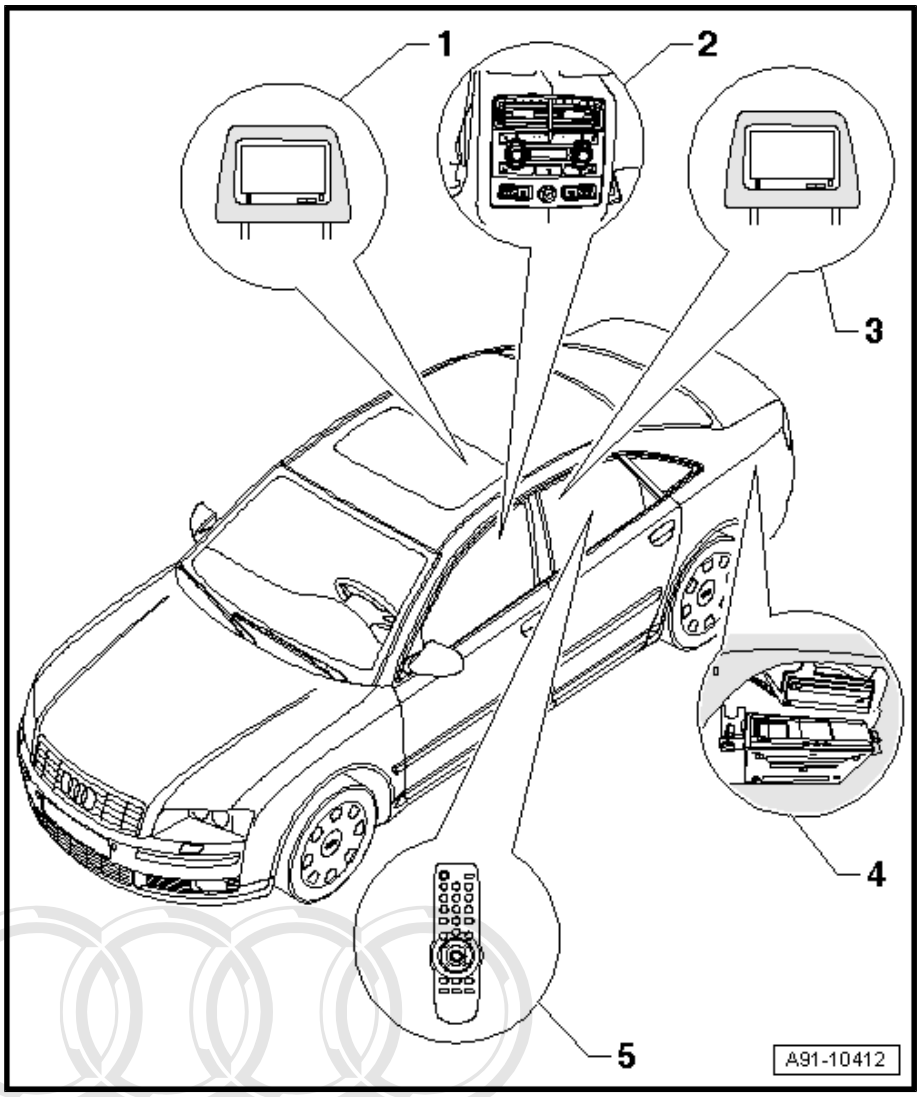

1 - Multimedia system display unit 2 -Y23-

- ❑ In head restraint of front seat (right-side)
- ❑ Removing and installing (up to 10/05) ⇒ page 318
- ❑ Removing and installing (from 11/05 onwards) ⇒ page 322

2 - Driver side volume button -E374- / multimedia system headphones for left side -R123-

- ❑ In rear centre console
- ❑ Removing and installing ⇒ page 318

- Front passenger side volume button -E375- / multimedia system headphones for right side -R124-

- ❑ Removing and installing ⇒ page 318

3 - Multimedia system display unit 1 -Y22-

- ❑ In head restraint of front seat (left-side)
- ❑ Removing and installing (up to 10/05) ⇒ page 318
- ❑ Removing and installing (from 11/05 onwards) ⇒ page 322

4 - Rear DVD changer -R162-

- ❑ Behind luggage compartment side trim (left-side)
- ❑ Pin assignment ⇒ page 314
- ❑ Removing and installing ⇒ page 316

- Multimedia system signal splitter -R181-

- ❑ Pin assignment ⇒ page 314
- ❑ Removing and installing ⇒ page 317

5 - Remote control for rear DVD changer -R162-

- ❑ In storage compartment on rear centre armrest
- ❑ Removing and installing storage compartment ⇒ page 285

Copyright © 2009 for private or commercial purposes, in part or in whole, is not permitted unless authorised by AUDI AG. AUDI AG does not guarantee or accept any liability with respect to the correctness of information in this document. Copyright by AUDI AG.

20.8 Removing and installing rear DVD changer -R162-

– Switch off all electrical equipment.

– Remove ignition key.

Removing

– Open left-side luggage compartment storage area.
– Swivel rear DVD changer -R162- into luggage compartment.
– Remove DVD magazine from rear DVD changer -R162- .
– Unscrew bolts -1- and -2- (3 Nm) and remove rear DVD changer -R162- from mounting frame.
– Unplug electrical connectors at rear DVD changer -R162- .

Installing

– Check installation position at rear DVD changer -R162- .

Must be set to “V”.

– Remove transport safeguards.
– Installation is performed in reverse sequence.

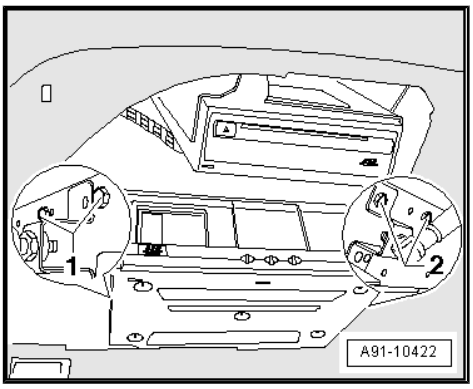

20.9 Removing and installing multimedia system signal splitter -R181-

– Switch off all electrical equipment.
– Remove ignition key.

Removing

– Remove luggage compartment side trim (left-side) ⇒ General body repairs, interior; Rep. Gr. 70 .
– Unscrew bolt -2- (3 Nm).
– Remove navigation system with CD drive control unit -J401- together with mounting frame -1- ⇒ page 201 .
– Unscrew nuts -3-, -5- and -6- (3 Nm).
– Carefully pull mounting frame -4- out of mounting and unplug connectors.
– If fitted, remove satellite radio -R146- ⇒ page 134 .
– Unplug connectors at multimedia system signal splitter -R181- .

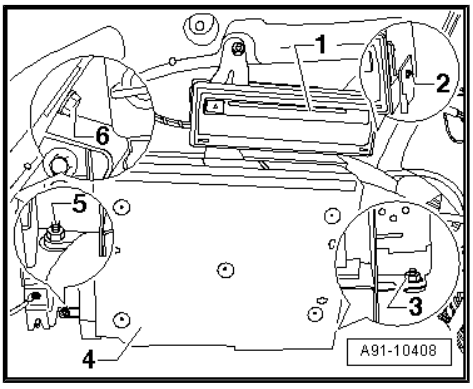

– Unscrew studs -2- and -5-.
– Unscrew bolts -3- and -4- (3 Nm).
– Detach multimedia system signal splitter -R181- -6- from mounting frame -1-.

Installing

– Installation is performed in reverse sequence.
– Check operation of satellite radio -R146- .

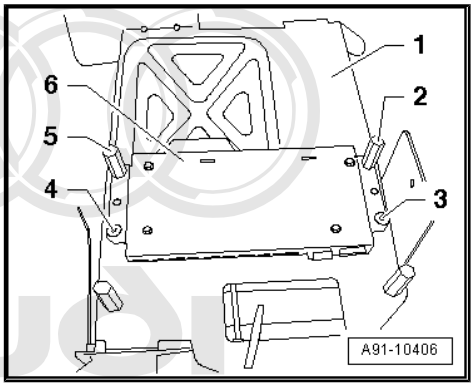

Protected by copyright. Copying for private or commercial purposes, in part or in whole, is not permitted unless authorised by AUDI AG. AUDI AG does not guarantee or accept any liability with respect to the correctness of information in this document. Copyright by AUDI AG.

20.10 Removing and installing driver side volume button -E374-

The procedure for removing and installing the driver side volume button -E374- and the front passenger side volume button -E375- is the same.

The procedure to remove and install rear centre console (short and long version) is identical, however, on the short version the cover for rear centre console also has to be removed.

– Switch off all electrical equipment.

– Remove ignition key.

Removing

– Unclip cover at buttons -arrows-.

– Unclip driver side volume button -E374- using a small screwdriver.

– Unplug connectors on driver side volume button -E374-

Installing

– Installation is performed in reverse sequence.

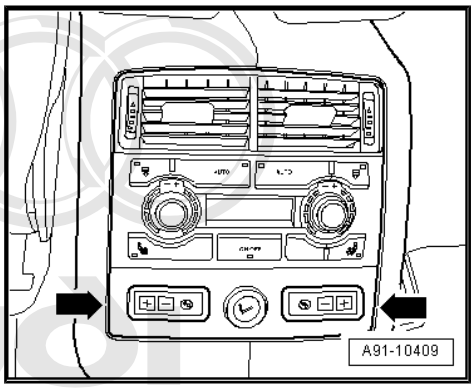

Copyright by AUDI AG. All rights reserved. Distribution or commercial purposes, in part or in whole, is not permitted unless authorised by AUDI AG. AUDI AG does not guarantee or accept any liability with respect to the correctness of information in this document. Copyright by AUDI AG.

20.11 Removing and installing display units in head restraints (up to 10/05)

20.11.1 Removing and installing multimedia system display unit 1 -Y22-

The procedure for removing and installing multimedia system display unit 1 -Y22- and multimedia system display unit 2 -Y23- is the same.

– Switch off all electrical equipment.

– Remove ignition key.

Removing

– Move head restraints to uppermost position and fold head restraint towards the front.

– Detach head restraint cover -2- from guide -1-.

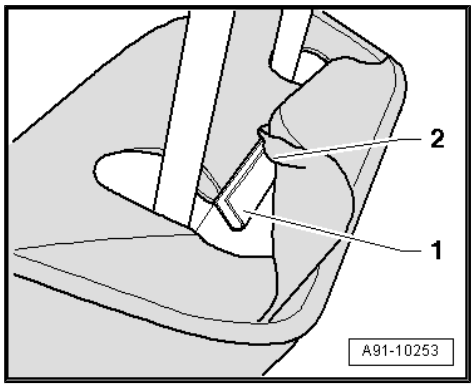

– Unscrew bolt -arrow- (3 Nm) on inside of head restraint.

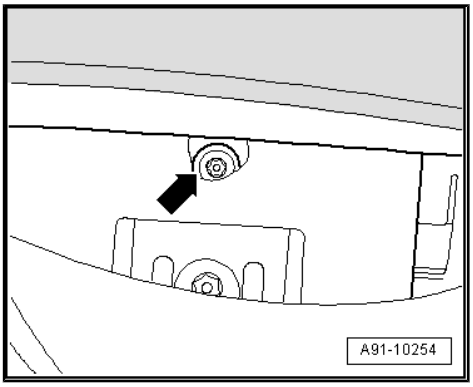

– Carefully lever multimedia system display unit 1 -Y22- out of head restraint -arrow- using a suitable tool.

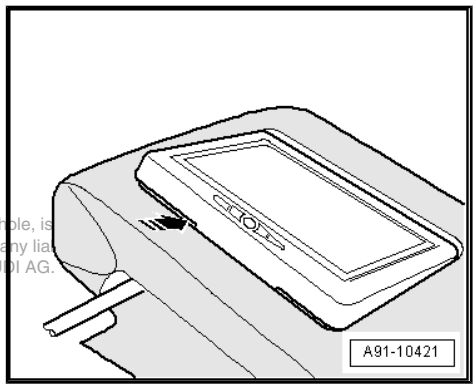

Protected by copyright. Copying for private or commercial purposes, in part or in whole, is not permitted unless authorised by AUDI AG. AUDI AG does not guarantee or accept any liability with respect to the correctness of information in this document. Copyright by AUDI AG.

– Swivel multimedia system display unit 1 -Y22- -1- from head restraint -3- and unplug connector -2-.
– Remove multimedia system display unit 1 -Y22- -1-.

Installing

– Installation is performed in reverse sequence.

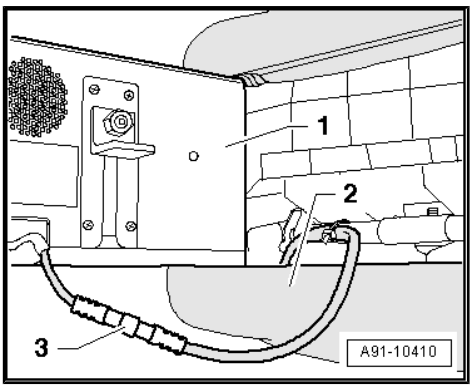

20.11.2 Removing and installing display unit wiring in backrest

For removing and and installing the display unit wiring to the multimedia system display unit 1 -Y22- the bottom backrest cover must be removed.

– Switch off all electrical equipment.
– Remove ignition key.

Removing

– Remove the bottom backrest cover ⇒ General body repairs, interior; Rep. Gr. 72 .
– Remove multimedia system display unit 1 -Y22- in head restraint ⇒ page 283 .

Display unit wiring is fitted in rail of head restraint. If the display unit wiring is defective, it must be unplugged at the bottom connector.

– Unplug connector of black display unit wiring at bottom of seat and cut connector off.

Note

Keep connector for further use. Use connector during pin assignment.

– Cut through cable tie -arrow- in head restraint.

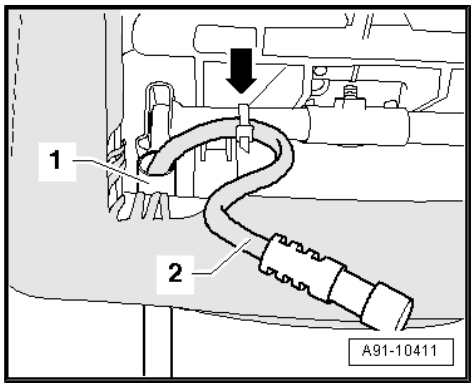

– Cut through cable ties along length of wiring in backrest -arrows-.

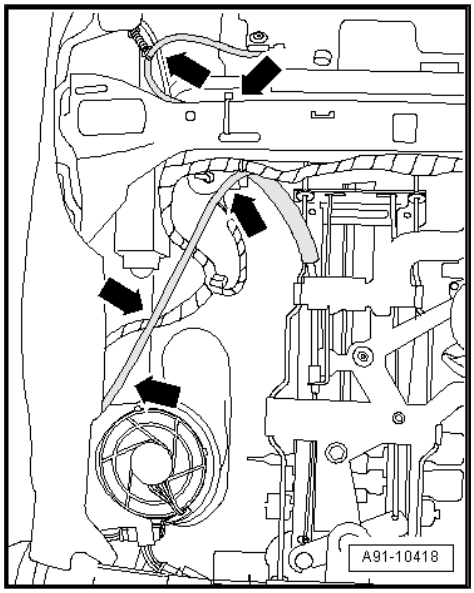

Note

For subsequent fitting of the new wiring, it is helpful to take a photograph or make a drawing of the wire routing in the backrest prior to removal.

In bottom section of seat, the wiring is routed on seat wiring harness.

– Cut through all the cable ties.

– Pull display unit wiring -2- upwards out of head restraint rail -1-.

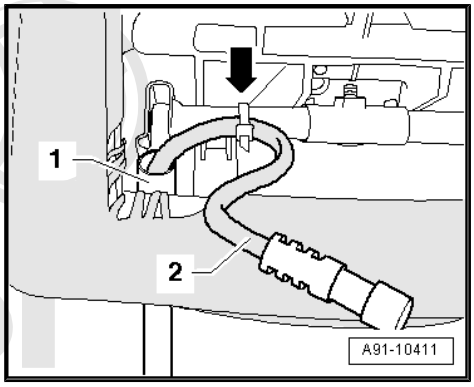

Installing

The display unit wiring is supplied without the bottom connector.

Protected by copyright. Copying for private or commercial purposes, in part or in whole, is not permitted unless authorised by AUDI AG. AUDI AG does not guarantee or accept any liability with respect to the correctness of information in this document. Copyright by AUDI AG.

– Guide the free end of the display unit wiring -2- through the rail of the head restraint -1- and secure the display unit wiring with a cable tie -arrow-.

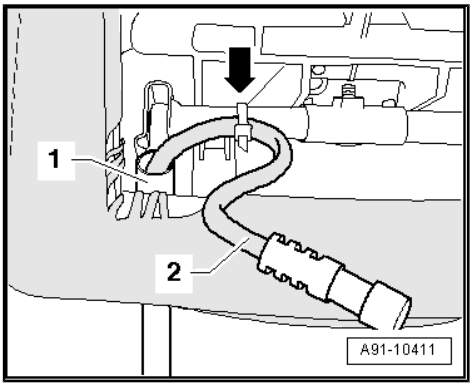

– Mark on display unit wiring

dimension a = 80 mm

and

dimension b = 230 mm.

The dimensions given represent the securing points. Also refer to “old” display unit wiring.

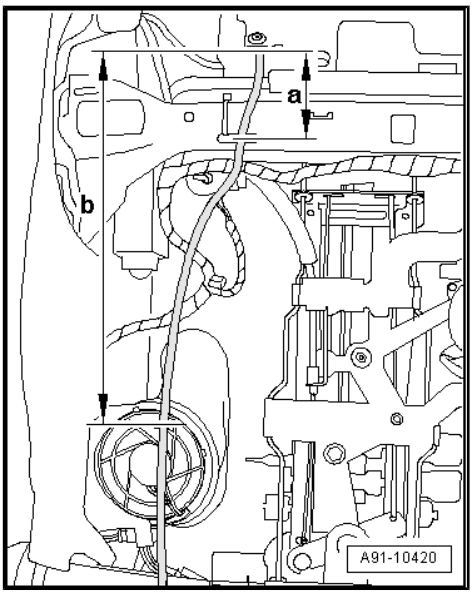

Protected by copyright. Copying for private or commercial purposes, in part or in whole, is not permitted unless authorised by AUDI AG. AUDI AG does not guarantee or accept any liability with respect to the accuracy of information in this document. Copyright by AUDI AG.

– Secure display unit wiring at “dimension a” to spring (top left) -arrow 1-.

– Make a loop and secure display unit wiring at “dimension b” on seat wiring harness -arrow 3- from the rear.

– Secure display unit wiring to backrest metal panel -arrow 2-.

– It is important to ensure that display unit wiring from end of head restraint rail to securing point -arrow 2- can follow movements of adjustable active head restraint without becoming trapped or tensioned.

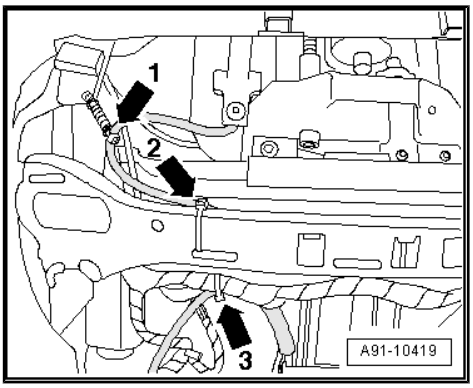

– Route display unit wiring on backrest wiring harness and seat wiring harness -arrows- further, as far as connector on seat wiring harness.

Fit 12-pin connector after completing work on seat.

Pin assignment ⇒ page 315

– Perform further installation in reverse sequence.

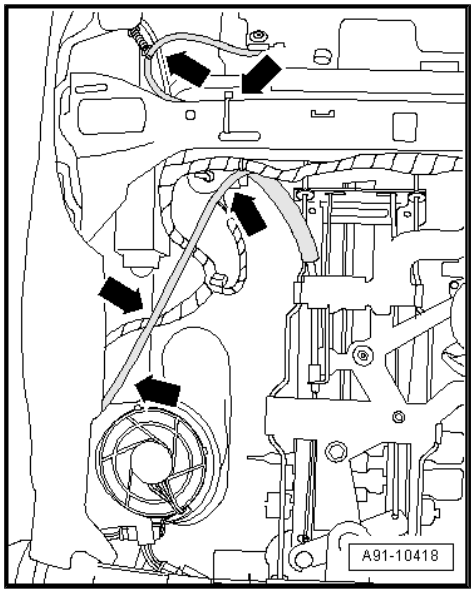

20.12 Removing and installing display units in head restraints (from 11/05 onwards)

20.12.1 Removing and installing multimedia system display unit 1 -Y22-

The procedure for removing and installing multimedia system display unit 1 -Y22- and multimedia system display unit 2 -Y23- is the same.

– Switch off all electrical equipment.

– Remove ignition key.

Removing

Multimedia system display unit 1 -Y22- is engaged with mounting frame in head restraint.

For this purpose two grooves -2- are provided on both sides of multimedia system display unit 1 -Y22- and two tabs -1- on mounting frame in head restraint.

Press both tabs evenly with a flat tool.

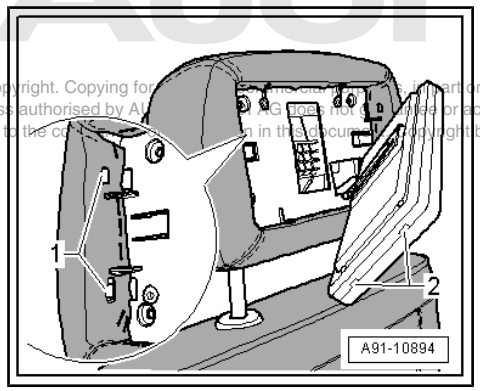

Protected by copyright. Copying for private or commercial purposes, in part or in whole, is not permitted unless authorised by AUDI AG. AUDI AG does not guarantee or accept any liability with respect to the correctness of information in this document. Copyright by AUDI AG.

Suitable tools are commercially available plastic spatulas -1- with the following dimensions

a = approx. 70 mm

b = approx. 100 mm

Thickness = max. 0.5 mm

All edges rounded

Do not damage leather or fabric head restraint cover and avoid pressure marks.

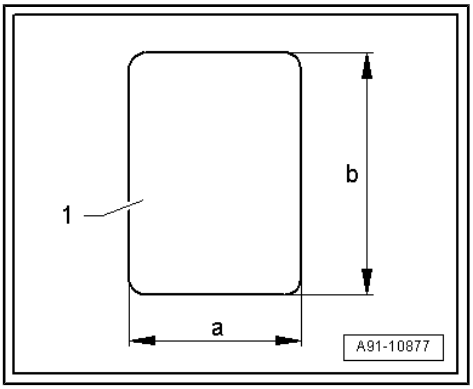

– Press in plastic spatulas -1- between head restraint -2- and multimedia system display unit 1 -Y22- -3- in direction of -arrow A- until tabs -arrows B- are pushed back.

Apply gentle sideways pressure to plastic spatula -1- to swivel multimedia system display unit 1 -Y22- -3- out of head restraint -2-.

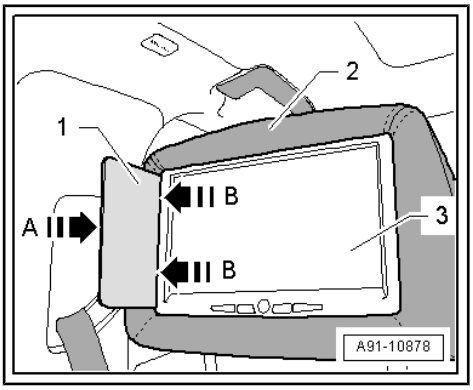

– Unplug connector -2- in head restraint -1- and detach multimedia system display unit 1 -Y22- -3-.

Installing

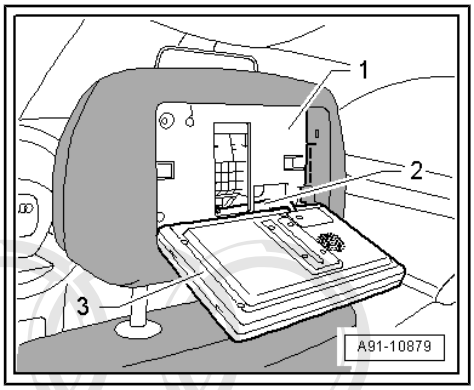

– Plug in connector -2-.

– Press multimedia system display unit 1 -Y22- -3- evenly into head restraint -1- until it engages audibly.

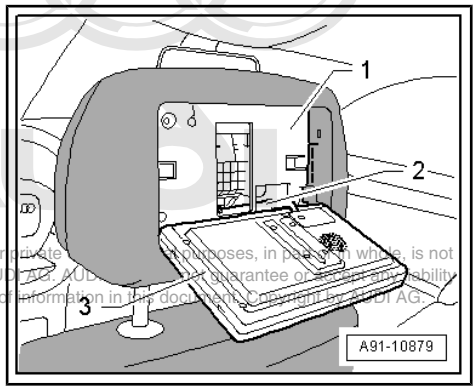

Protected by copyright. Copying for private or commercial purposes, in part or in whole, is not permitted unless authorised by AUDI AG. AUDI AG does not guarantee or accept any liability with respect to the correctness of information in this document. Copyright by AUDI AG.

20.12.2 Removing and installing display unit wiring in backrest

For removing and and installing the display unit wiring to the multimedia system display unit 1 -Y22- the bottom backrest cover must be removed.

– Switch off all electrical equipment.

– Remove ignition key.

Removing

– Remove the bottom backrest cover ⇒ General body repairs, interior; Rep. Gr. 72 .

– Remove multimedia system display unit 1 -Y22- in head restraint ⇒ page 322 .

Display unit wiring is fitted in rail of head restraint. If the display unit wiring is defective, it must be unplugged at the bottom connector.

– Unplug connector of black display unit wiring at bottom of seat and disconnect individual contacts at connector housing.

– Cut through cable ties along length of wiring in backrest -arrows-.

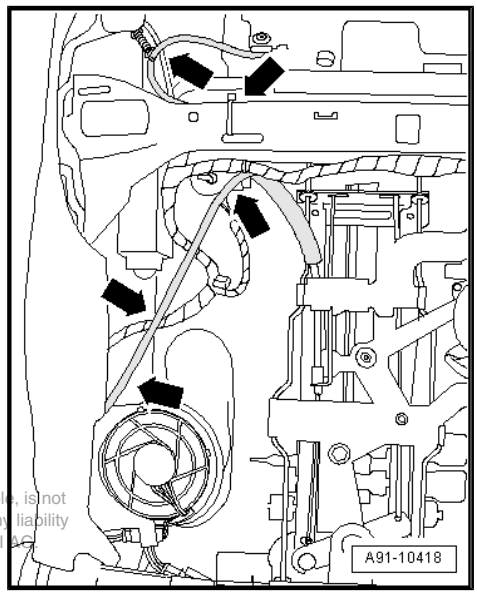

Note

For subsequent fitting of the new display unit wiring, it is helpful to take a photograph or make a drawing of the wire routing in the backrest prior to removal.

The display unit wiring is routed along the seat wiring harness in the bottom section of the seat.

– Cut through all the cable ties.

Protected by copyright. Copying for private or commercial purposes, in part or in whole, is not permitted unless authorised by AUDI AG. AUDI AG does not guarantee or accept any liability with respect to the correctness of information in this document. Copyright by AUDI AG.

– Pull display unit wiring -arrows- upwards out of head restraint.

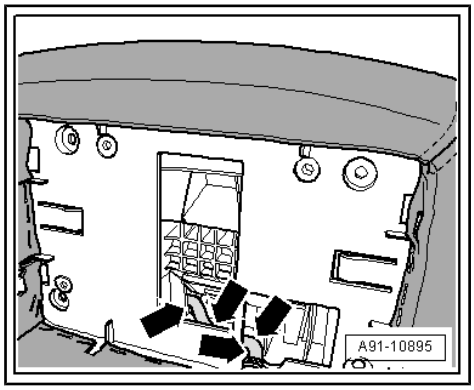

Installing

The display unit wiring is supplied without the bottom connector.

– Guide the free end of the display unit wiring -arrows- through the head restraint.

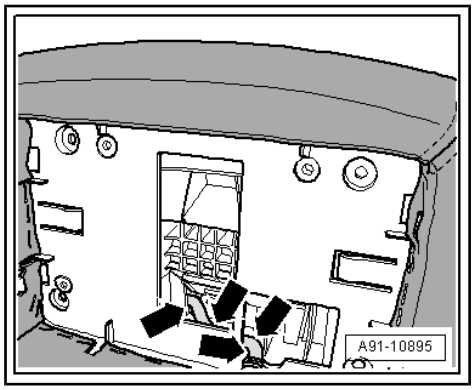

– Mark on display unit wiring

  dimension a = 80 mm

and

  dimension b = 230 mm.

The dimensions given represent the securing points. Also refer to “old” display unit wiring.

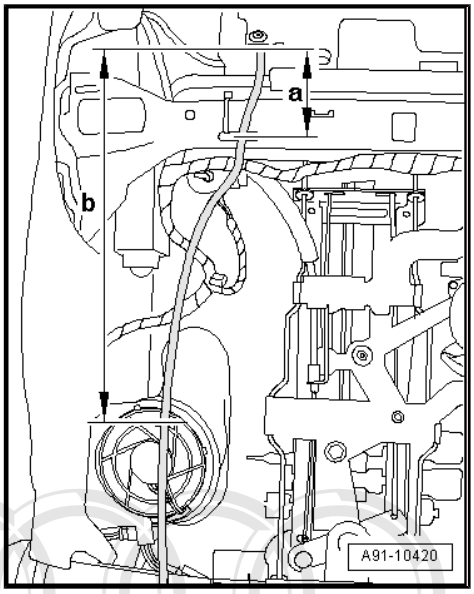

– Secure display unit wiring at “dimension a” to spring (top left) -arrow 1-.
– Make a loop and secure display unit wiring at “dimension b” on seat wiring harness -arrow 3- from the rear.
– Secure display unit wiring to backrest metal panel -arrow 2-.
– It is important to ensure that display unit wiring from end of head restraint rail to securing point -arrow 2- can follow movements of adjustable active head restraint without becoming trapped or tensioned.

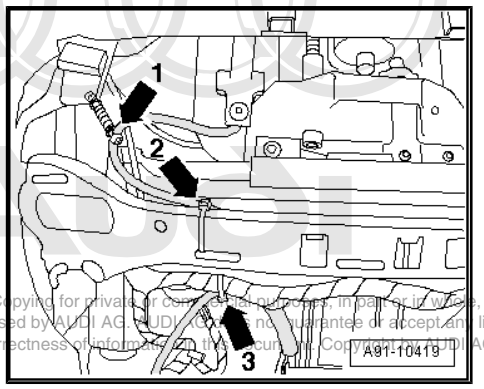

Protected by copyright. Copying for private or commercial purposes, in part or in whole, is not permitted unless authorised by AUDI AG. AUDI AG does not guarantee or accept any liability with respect to the correctness of information in this document. Copyright by AUDI AG.

– Route display unit wiring on backrest wiring harness and seat wiring harness -arrows- further, as far as connector on seat wiring harness.

Fit 12-pin connector to display unit wiring after completing work on seat.

Pin assignment ⇒ page 315 .

– Perform further installation in reverse sequence.

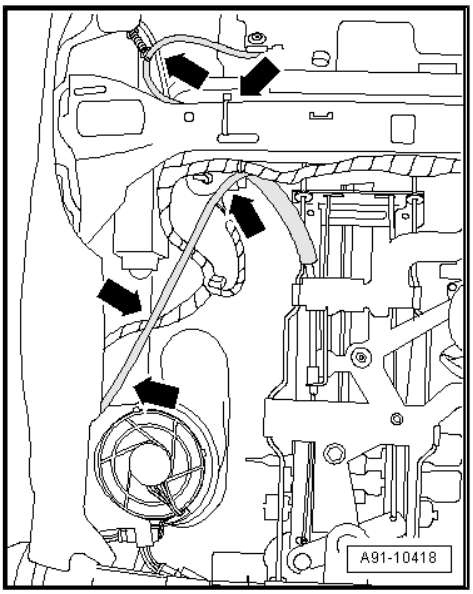

20.13 Removing and installing storage tray for remote controls

Special tools and workshop equipment required

♦ Removal wedge -3409-

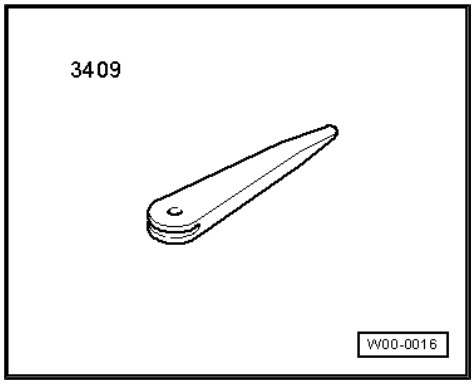

– Switch off all electrical equipment.
– Remove ignition key.

Removing

The storage tray is bonded to the storage compartment in the rear armrest.

– Take out remote controls -1- and -2-.
– Mask the edges to protect the centre armrest.
– Carefully lever the storage tray out of the storage compartment -arrows- using removal wedge -3409- .

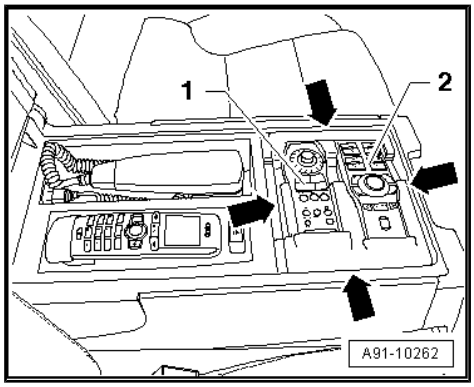

Installing

– Apply adhesive to bottom sides of storage tray.
– Carefully press storage tray into storage compartment until upper edges of tray and storage compartment are flush.
– Remove surplus adhesive if necessary.

Protected by copyright. Copying for private or commercial purposes, in part or in whole, is not permitted unless authorised by AUDI AG. AUDI AG does not guarantee or accept any liability with respect to the correctness of information in this document. Copyright by AUDI AG.

21 RSE (Rear Seat Entertainment system) - Blaupunkt (from model year 2007 onwards)

21.1 General notes

The “Rear Seat Entertainment system” consists of:

- Rear DVD changer -R162- with remote control
- Display units in head restraints of front seats
- Headphone connections in rear centre console
- Connections for video/game consoles in rear centre console

Audio and video signals from rear DVD changer -R162- are only reproduced via display units in head restraints and headphone connections in rear centre console.

The system has no connection to the MMI and the sound system of the vehicle.

Additional information ⇒ Owner's Manual for RSE .

Protected by copyright. Copying for private or commercial purposes, in part or in whole, is not permitted unless authorised by AUDI AG. AUDI AG does not guarantee or accept any liability with respect to the correctness of information in this document. Copyright by AUDI AG.

21.2 RSE system - Blaupunkt - layout

1 - Multimedia system display unit 1 -Y22- in head restraint of front seat (left-side)

2 - Multimedia system display unit 2 -Y23- in head restraint of front seat (right-side)

3 - Multimedia system headphones for left side -R123- / additional connections unit for audio and video -R176- in rear centre console

4 - Multimedia system headphones for right side -R124- / additional connections unit for audio and video -R176- in rear centre console

5 - Multimedia system control unit -J650- behind luggage compartment side trim (left-side)

6 - Rear DVD changer -R162- behind luggage compartment side trim (left-side)

7 - Multi-pin connector (T4ah, black), connection to vehicle wiring harness behind luggage compartment side trim (left-side)

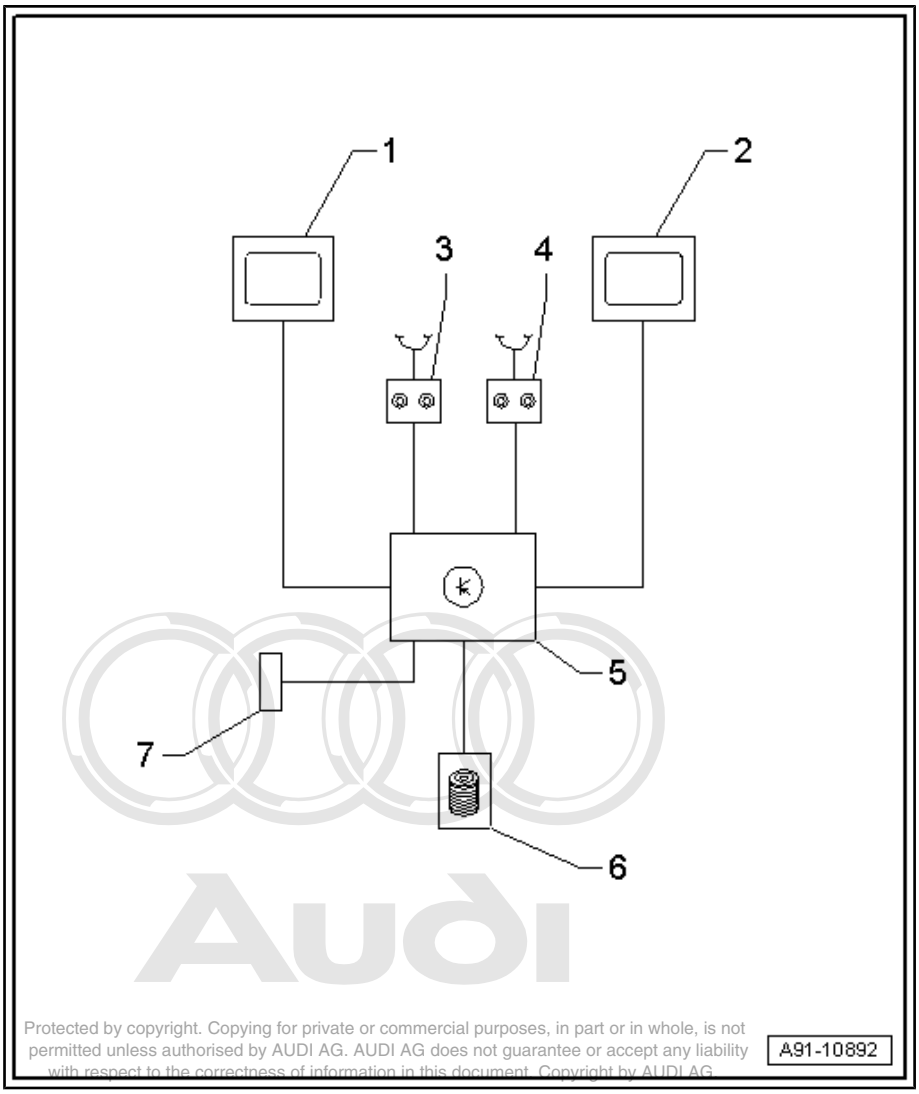

Protected by copyright. Copying for private or commercial purposes, in part or in whole, is not permitted unless authorised by AUDI AG. AUDI AG does not guarantee or accept any liability with respect to the correctness of information in this document. Copyright by AUDI AG

21.3 Connectors on rear DVD changer - R162- (DVC 03)

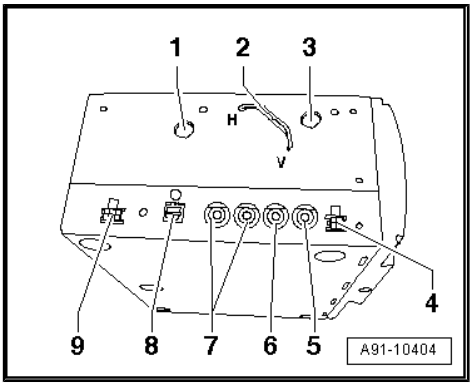

Note

Contacts which are not listed are not used.

Rear DVD changer -R162-

1 - Transport safeguard (removed)

2 - Installation position (must always be set to vertical “V”)

3 - Transport safeguard (removed)

4 - Remote - not used

5 - Video output 2 (not used)

6 - Video output 1 (yellow) to multimedia system control unit - J650-

7 - Audio output (white/red) to multimedia system control unit - J650-

8 - SPDIF (not used)

9 - Power supply (black) to multimedia system control unit - J650-

Connectors 6, 7 and 9 are routed together to connector socket T12u - adapter cable.

Protected by copyright. Copying for private or commercial purposes, in part or in whole, is not permitted unless authorised by AUDI AG. AUDI AG does not guarantee or accept any liability with respect to the correctness of information in this document. Copyright by AUDI AG.

21.4 Connectors on rear DVD changer - R162- (DVC 06)

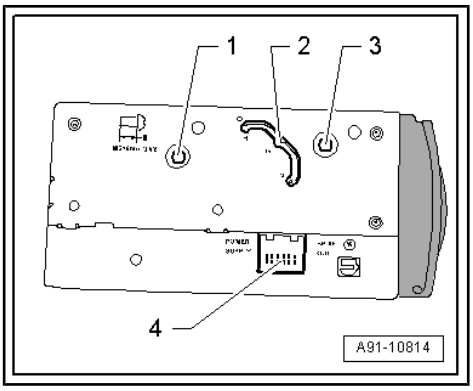

Note

Contacts which are not listed are not used.

Rear DVD changer -R162-

1 - Transport safeguard (removed)

2 - Installation position (must always be set to vertical “V”)

3 - Transport safeguard (removed)

4 - Multi-pin connector, 12-pin, black (T12u) to multimedia system control unit -J650-

4 - Multi-pin connector, 12-pin, black (T12u)

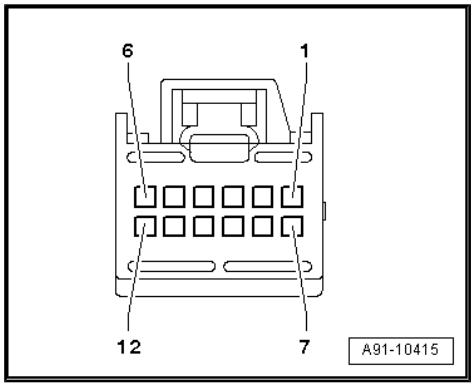

1 - Terminal 30 from multimedia system control unit -J650- , red

2 - IR-DATA from multimedia system control unit -J650- , purple

3 - Audio (right-side) to multimedia system control unit -J650- , white

4 - Audio (left-side) to multimedia system control unit -J650- , white

5 - Video to multimedia system control unit -J650- , white

6 - Not used

7 - Terminal 31 from multimedia system control unit -J650- , black

8 - Switched terminal 30 from multimedia system control unit -J650- , orange

9 - TSENS from multimedia system control unit -J650- , green

10 - Screen earth (audio), black

11 - Screen earth (video), black

12 - Common screen, black

Protected by copyright. Copying for private or commercial purposes, in part or in whole, is not permitted unless authorised by AUDI AG. AUDI AG does not guarantee or accept any liability with respect to the correctness of information in this document. Copyright by AUDI AG.

21.5 Connectors on multimedia system control unit -J650-

1 - Multi-pin connector, 18-pin (T18e) (not used)

2 - Multi-pin connector, 26-pin, green (T26e) to rear DVD changer -R162- / multimedia system display unit 1 -Y22- / multimedia system display unit 2 -Y23-

3 - Multi-pin connector, 26-pin, black (T26d) to additional connections unit for video and audio -R176- /voltage supply

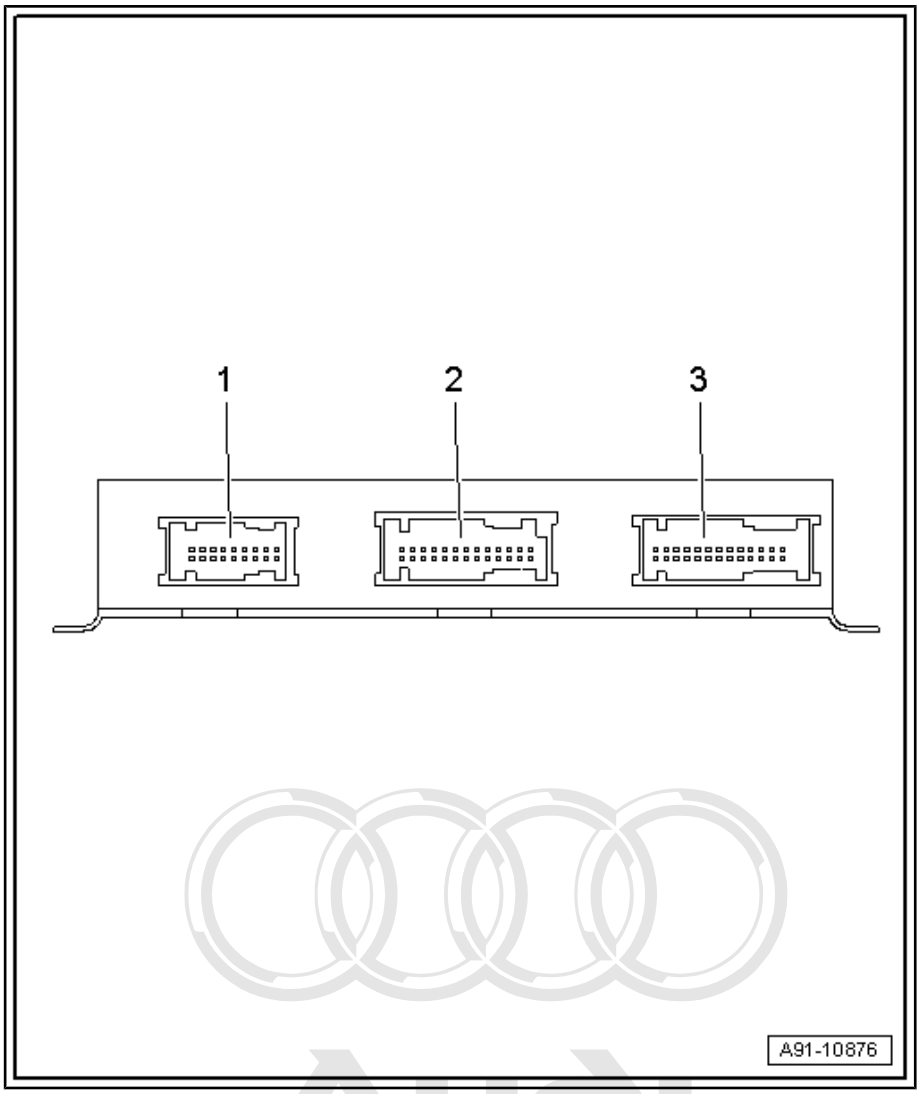

Protected by copyright. Copying for private or commercial purposes, in part or in whole, is not permitted unless authorised by AUDI AG. AUDI AG does not guarantee or accept any liability with respect to the correctness of information in this document. Copyright by AUDI AG.

21.6 Wiring for multimedia system control unit -J650- /display units/DVD

1 - Multi-pin connector, 26-pin, green (T26e) at multimedia system control unit -J650-

2 - Multi-pin connector, 12-pin, black (T12u) to rear DVD changer -R162-

3 - Multi-pin connector, 12-pin, black (T12ac) to multimedia system display unit 1 -Y22-

4 - Multi-pin connector, 12-pin, black (T12ad) to multimedia system display unit 2 -Y23-

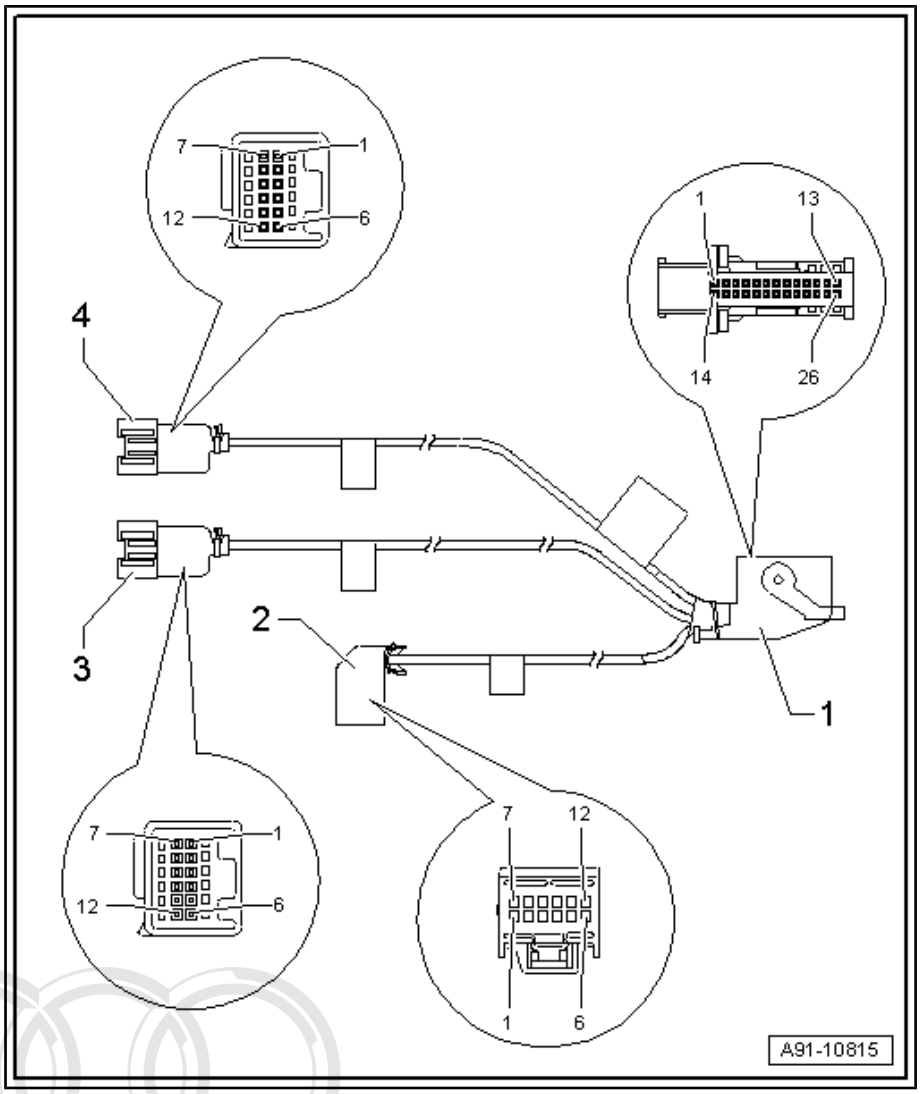

Protected by copyright. Copying for private or commercial purposes, in part or in whole, is not permitted unless authorised by AUDI AG. AUDI AG does not guarantee or accept any liability with respect to the correctness of information in this document. Copyright by AUDI AG.

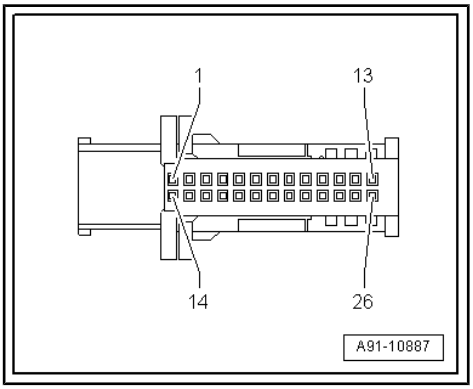

Note

Contacts which are not listed are not used.

1 - Multi-pin connector, 26-pin, green (T26e)

1 - Terminal 30 to rear DVD changer -R162- , red

2 - Switched terminal 30 to rear DVD changer -R162- , orange

3 - IR-DATA to rear DVD changer -R162- , purple

4 - Screen earth (video) to rear DVD changer -R162- , black

5 - Video from rear DVD changer -R162- , white

6 - IR-DATA from multimedia system display unit 1 -Y22- , brown

7 - Screen earth (video) to multimedia system display unit 1 -Y22- , black

8 - Video to multimedia system display unit 1 -Y22- , white

9 - TxD from multimedia system display unit 2 -Y23- , blue

10 - IR-DATA from multimedia system display unit 2 -Y23- , brown

11 - Screen earth (video) to multimedia system display unit 2 -Y23- , black

12 - Video to multimedia system display unit 2 -Y23- , white

13 - RxD to multimedia system display unit 2 -Y23- , yellow

14 - Terminal 31/common screen to rear DVD changer -R162- , black

15 - TSENS to rear DVD changer -R162- , green

16 - Screen earth (audio) to rear DVD changer -R162- , black

17 - Audio (right-side) from rear DVD changer -R162- , white

18 - Audio (left-side) from rear DVD changer -R162- , white

19 - Terminal 31 to multimedia system display unit 2 -Y23- , black

20 - RxD to multimedia system display unit 1 -Y22- , yellow

21 - TxD from multimedia system display unit 1 -Y22- , blue

22 - Terminal 31 to multimedia system display unit 1 -Y22- , black

23 - Not used

24 - Not used

25 - Terminal 30 to multimedia system display unit 2 -Y23- , red

26 - Terminal 30 to multimedia system display unit 1 -Y22- , red

Protected by copyright. Copying for private or commercial purposes, in part or in whole, is not permitted unless authorised by AUDI AG. AUDI AG does not guarantee or accept any liability with respect to the correctness of information in this document. Copyright by AUDI AG.

2 - Multi-pin connector, 12-pin, black (T12u)

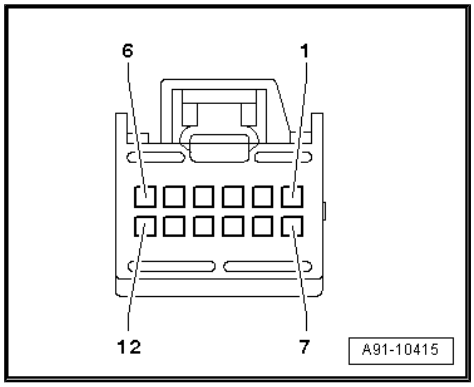

1 - Terminal 30 from multimedia system control unit -J650- , red
2 - IR-DATA from multimedia system control unit -J650- , purple
3 - Audio (right-side) from rear DVD changer -R162- , white
4 - Audio (left-side) from rear DVD changer -R162- , white
5 - Video from rear DVD changer -R162- , white
6 - Not used
7 - Terminal 31 from multimedia system control unit -J650- , black
8 - Switched terminal 30 from multimedia system control unit -J650- , orange
9 - TSENS from multimedia system control unit -J650- , green
10 - Screen earth (audio), black
11 - Screen earth (video), black
12 - Common screen, black

3 - Multi-pin connector, 12-pin, black (T12ac)

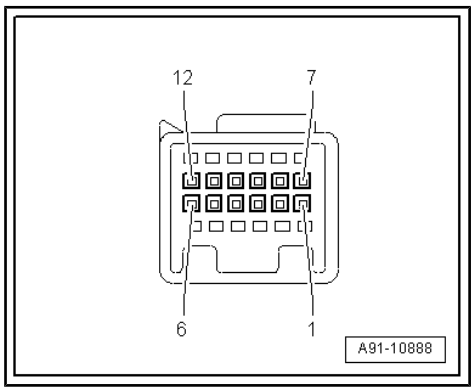

1 - Terminal 30 from multimedia system control unit -J650- , red
2 - TXD from multimedia system display unit 1 -Y22- , blue
3 - IR-DATA from multimedia system display unit 1 -Y22- , brown
4 - Not used
5 - Screen earth (video), black
6 - Not used
7 - Terminal 31 from multimedia system control unit -J650- , black
8 - RXD from multimedia system control unit -J650- , yellow
9 - Not used
10 - Not used
11 - Video from multimedia system control unit -J650- , white

Protected by copyright. Copying for private or commercial purposes, in part or in whole, is not permitted unless authorised by AUDI AG. AUDI AG does not guarantee or accept any liability with respect to the correctness of information in this document. Copyright by AUDI AG.

4 - Multi-pin connector, 12-pin, black (T12ad)

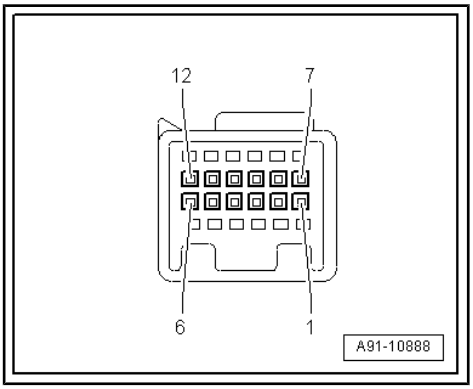

1 - Terminal 30 from multimedia system control unit -J650- , red

2 - TXD from multimedia system display unit 2 -Y23- , blue

3 - IR-DATA from multimedia system display unit 2 -Y23- , brown

4 - Not used

5 - Screen earth (video), black

6 - Not used

7 - Terminal 31 from multimedia system control unit -J650- , black

8 - RXD from multimedia system control unit -J650- , yellow

9 - Not used

10 - Not used

11 - Video from multimedia system control unit -J650- , white

21.7 Wiring for multimedia system control unit/video connection/supply

1 - Multi-pin connector, 26-pin, black (T26d) at multimedia system control unit -J650-

2 - Multi-pin connector, 12-pin, black (T12an) to multimedia system headphones for right side -R124- / additional connections unit for video and audio -R176- (right-side)

3 - Multi-pin connector, 12-pin, black (T12am) to multimedia system headphones for left side -R123- / additional connections unit for video and audio -R176- (left-side)

4 - Multi-pin connector, 4-pin, black (T4ah), voltage supply

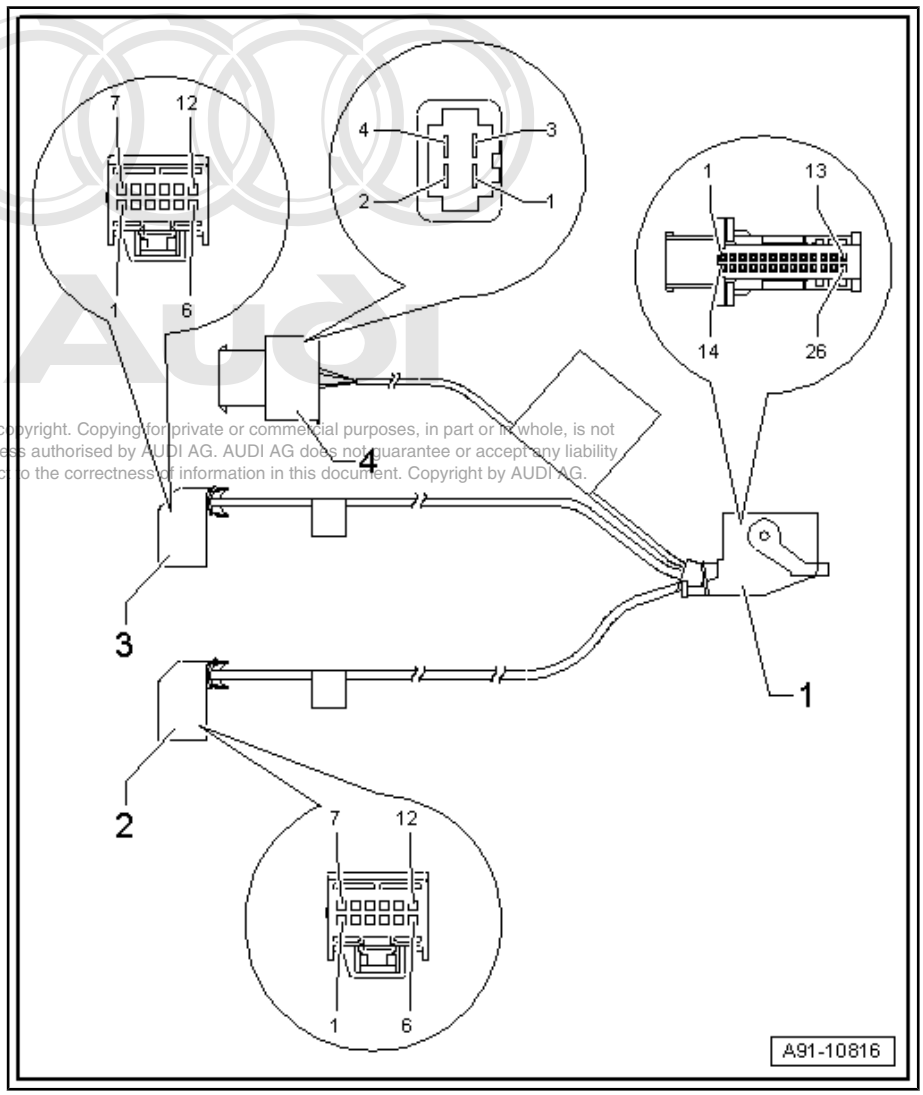

Protected by copyright. Copying for private or commercial purposes, in part or in whole, is not permitted unless authorised by AUDI AG. AUDI AG does not guarantee or accept any liability with respect to the correctness of information in this document. Copyright by AUDI AG.

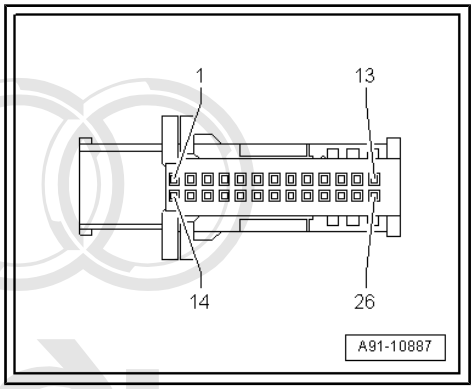

Note

Contacts which are not listed are not used.

1 - Multi-pin connector, 26-pin, black (T26d)

1 - Terminal 30, red

2 - Terminal 15, yellow/black

3 - Switched terminal 30, red/white

4 - AGFB multimedia system headphones for right side -R124- , red

5 - AGFB multimedia system headphones for left side -R123- , red

6 - Common screen, black/purple

7 - Screen earth, additional connections unit for video and audio -R176- (left-side), yellow

8 - Video from additional connections unit for video and audio -R176- (left-side), white

9 - Screen earth, additional connections unit for video and audio -R176- (left-side), black

10 - REM to additional connections unit for video and audio -R176- (left-side and right-side), white

11 - Audio (right-side) to multimedia system headphones for right side -R124- , blue

12 - Audio (left-side) to multimedia system headphones for right side -R124- , green

13 - Screen earth, multimedia system headphones for right side -R124- , black

14 - Terminal 31, brown

15 - Audio (right-side) from additional connections unit for video and audio -R176- (right-side), grey

16 - Audio (left-side) from additional connections unit for video and audio -R176- (right-side), brown

17 - Screen earth, additional connections unit for video and audio -R176- (right-side), yellow

18 - Audio (right-side) to multimedia system headphones for left side -R123- , blue

19 - Audio (left-side) to multimedia system headphones for left side -R123- , green

20 - Audio (right-side) from additional connections unit for video and audio -R176- (left-side), grey

21 - Audio (left-side) from additional connections unit for video and audio -R176- (left-side), brown

22 - Not used

23 - Not used

24 - Not used

25 - Video from additional connections unit for video and audio -R176- (right-side), white

Protected by copyright. Copying for private or commercial purposes, in part or in whole, is not permitted unless authorised by AUDI AG. AUDI AG does not guarantee or accept any liability with respect to the correctness of information in this document. Copyright by AUDI AG.

26 - ILL-ON to additional connections unit for video and audio -R176- (left-side and right-side), orange

2 - Multi-pin connector, 12-pin, black (T12an)

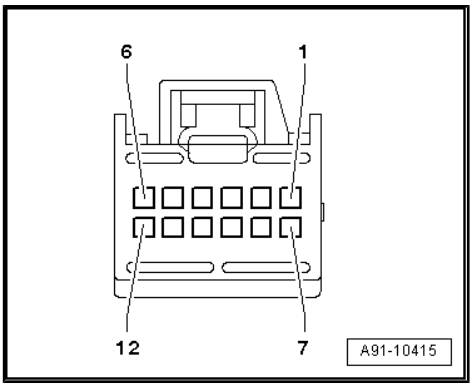

1 - AGFB to multimedia system headphones for right side -R124- , red

2 - Common screen, black

3 - REM from additional connections unit for video and audio -R176- , white

4 - Screen earth, additional connections unit for video and audio -R176- (right-side), yellow

5 - Video from additional connections unit for video and audio -R176- (right-side), white

6 - Screen earth, additional connections unit for video and audio -R176- (right-side), black

7 - Audio (right-side) to multimedia system headphones for right side -R124- , blue

8 - Audio (left-side) to multimedia system headphones for right side -R124- , green

9 - Audio (right-side) from additional connections unit for video and audio -R176- (right-side), grey

10 - Audio (left-side) from additional connections unit for video and audio -R176- (right-side), brown

11 - Common screen, purple

12 - ILL-ON to additional connections unit for video and audio -R176- (right-side), orange

3 - Multi-pin connector, 12-pin, black (T12am)

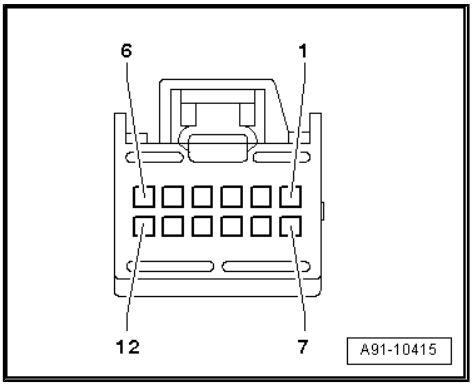

1 - AGFB to multimedia system headphones for left side -R123- , red

2 - Common screen, black

3 - REM from additional connections unit for video and audio -R176- , white

Protected by copyright. Copying for private or commercial purposes, in part or in whole, is not permitted unless authorised by AUDI AG. AUDI AG does not guarantee or accept any liability with respect to the correctness and completeness of this document.

4 - Screen earth, additional connections unit for video and audio -R176- (left-side), yellow

5 - Video from additional connections unit for video and audio -R176- (left-side), white

6 - Screen earth, additional connections unit for video and audio -R176- (left-side), black

7 - Audio (right-side) to multimedia system headphones for left side -R123- , blue

8 - Audio (left-side) to multimedia system headphones for left side -R123- , green

9 - Audio (right-side) from additional connections unit for video and audio -R176- (left-side), grey

10 - Audio (left-side) from additional connections unit for video and audio -R176- (left-side), brown

11 - Common screen, purple

12 - ILL-ON to additional connections unit for video and audio -R176- (left-side), orange

4 - Multi-pin connector, 4-pin, black (T4ah)

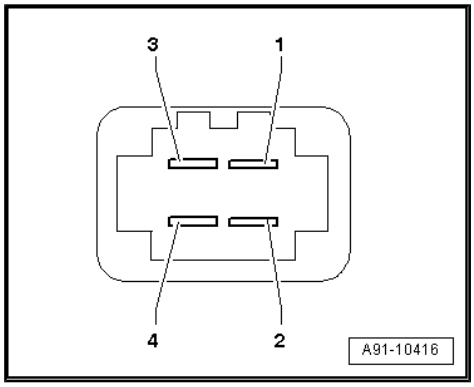

1 - Switched terminal 30 from current supply relay -J16- in relay and fuse holder in luggage compartment (right-side) (up to 08/06), red/white

- Switched terminal 30 from trailer detector control unit -J345- (from 09/06 onwards), red/white

2 - Terminal 31 from earth point in luggage compartment (right-side), brown

3 - Terminal 30 from communications fuse -S254- in relay and fuse holder in luggage compartment (right-side), red

4 - Terminal 15 from fuse 16 in fuse holder B -SB16- in fuse holder in dash panel (left-side), yellow/black

21.8 Pin assignment of display unit wiring beneath seat

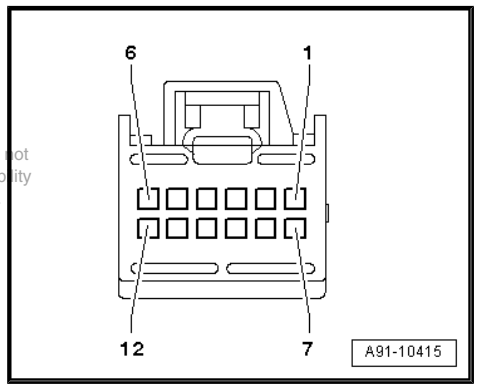

Note

Contacts which are not listed are not used.

Protected by copyright. Copying for private or commercial purposes, in part or in whole, is not permitted unless authorised by AUDI AG. AUDI AG does not guarantee or accept any liability with respect to the correctness of information in this document. Copyright by AUDI AG.

Multi-pin connector, 12-pin, black (T12ac/T12ad)

1 - Terminal 30, red

2 - TXD, blue

3 - IR-DATA, brown

4 - Not used

5 - Screen earth (video), black

6 - Not used

7 - Terminal 31, black

8 - RXD, yellow

9 - Not used

10 - Not used

11 - Video, white

21.9 Overview of fitting locations

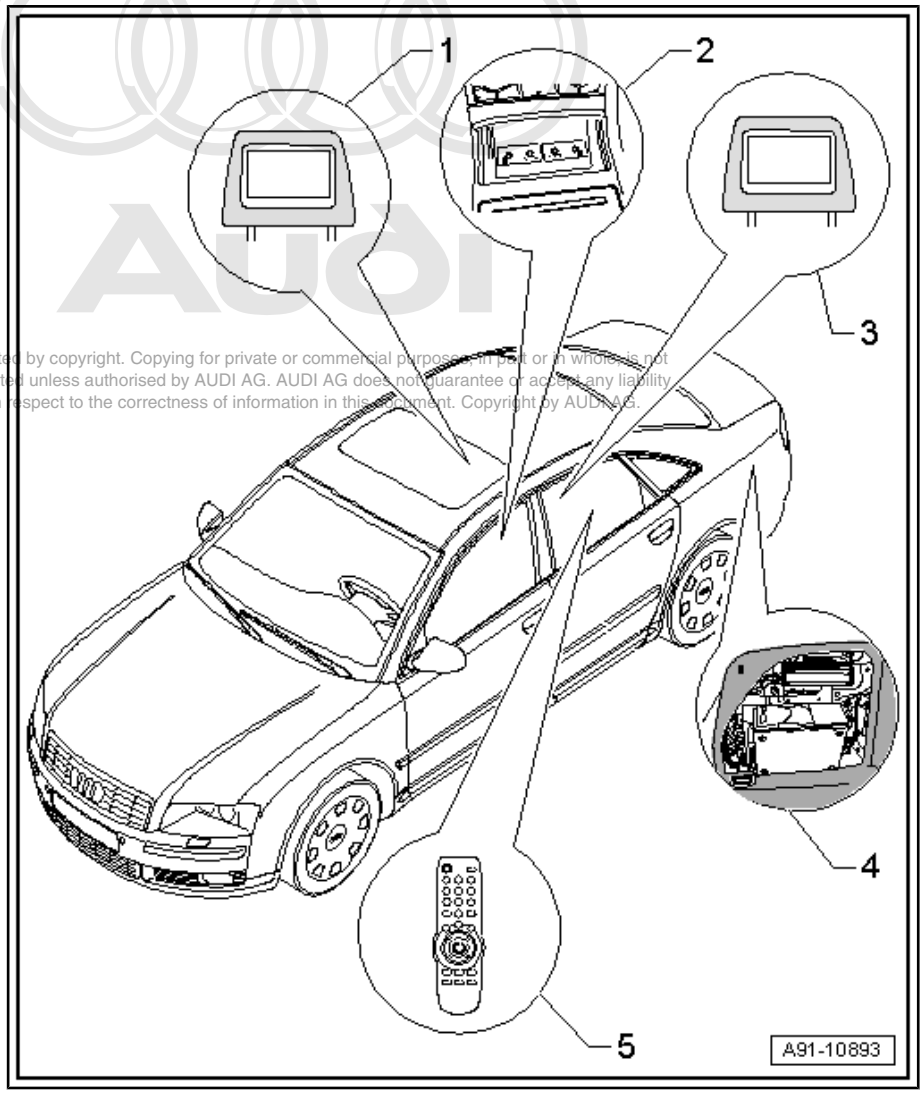

Protected by copyright. Copying for private or commercial purposes, in part or in whole, is not permitted unless authorised by AUDI AG. AUDI AG does not guarantee or accept any liability with respect to the correctness of information in this document. Copyright by AUDI AG.

1 - Multimedia system display unit 2 -Y23-

- ❑ In head restraint of front seat (right-side)
- ❑ Removing and installing ⇒ page 342

2 - Additional connections unit for audio and video -R176-

- Multimedia system head-phones for left side -R123- / multimedia system head-phones for right side -R124-

- ❑ In rear centre console
- ❑ Removing and installing ⇒ page 341

3 - Multimedia system display unit 1 -Y22-

- ❑ In head restraint of front seat (left-side)
- ❑ Removing and installing ⇒ page 342

4 - Rear DVD changer -R162-

- ❑ Behind luggage com-partment side trim (left-side)
- ❑ Pin assignment (DVC 03) ⇒ page 329
- ❑ Pin assignment (DVC 06) ⇒ page 329
- ❑ Removing and installing ⇒ page 340

- Multimedia system control unit -J650-

- ❑ Pin assignment ⇒ page 331
- ❑ Removing and installing ⇒ page 339

5 - Remote control for rear DVD changer -R162-

- ❑ In rear centre armrest storage compartment
- ❑ Removing and installing storage compartment ⇒ page 345

21.10 Removing and installing multimedia system control unit -J650-

– Switch off all electrical equipment.

– Remove ignition key.

Removing

The rear DVD changer -R162- does not have to be removed.

– Open left-side luggage compartment storage area.

– Swivel rear DVD changer -R162- into luggage compartment.

– Use a small screwdriver to unclip damper -1- and swivel retainer with rear DVD changer -R162- -5- into luggage compartment as far as it will go.
– Unscrew bolts -2- and -4- (3 Nm) at multimedia system control unit -J650- -3-.
– Unplug connectors at multimedia system control unit -J650- -3-.
– Remove multimedia system control unit -J650- -3- from retainer -5-.

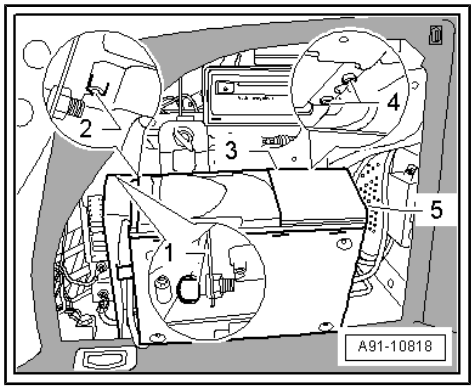

Installing

– Installation is performed in reverse sequence.

21.11 Removing and installing rear DVD changer -R162-

– Switch off all electrical equipment.
– Remove ignition key.

Removing

– Open left-side luggage compartment storage area.
– Swivel rear DVD changer -R162- into luggage compartment.
– Remove DVD magazine from rear DVD changer -R162- .
– Unscrew bolts -1- and -2- (3 Nm) and detach rear DVD changer -R162- -3- from mounting frame.
– Unplug connector -4- at rear DVD changer -R162- -3-.

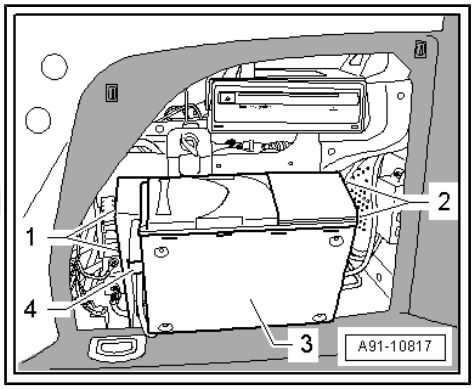

Installing

If a DVC 06 is installed in place of a DVC 03, the wiring between the rear DVD changer -R162- and the connector socket (T12u) must be removed. This wiring is no longer required when installing a DVC 06. The rear DVD changer -R162- is connected up via the connector T12u. Also use different spacer sleeves and bolts if necessary.

– Check installation position at rear DVD changer -R162- .

Positioners -2- and -4- must be set to “V”.

– Remove transport safeguards -1-, -3- and -5-.
– Installation is performed in reverse sequence.

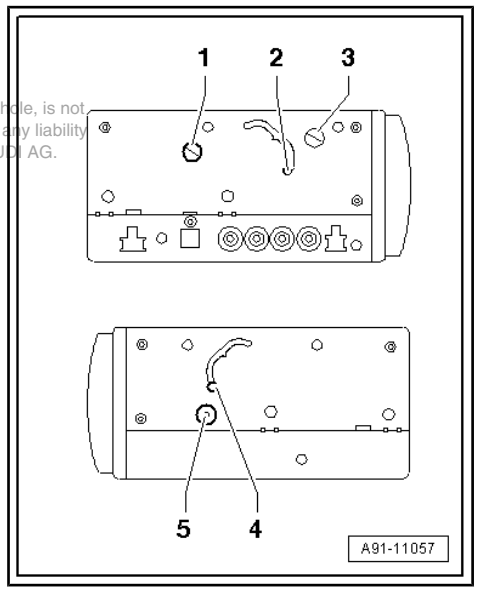

Protected by copyright. Copying for private or commercial purposes, in part or in whole, is not permitted unless authorised by AUDI AG. AUDI AG does not guarantee or accept any liability with respect to the correctness of information in this document. Copyright by AUDI AG.

21.12 Removing and installing retainer for rear DVD changer -R162-

If control units fitted behind the rear DVD changer -R162- have to be removed (radio -R- / digital radio -R147- / satellite radio -R146-), the retainer for the rear DVD changer -R162- must be removed. The rear DVD changer -R162- and control units attached to the retainer need not be removed.

– Switch off all electrical equipment.

– Remove ignition key.

Removing

– Open left-side luggage compartment storage area.

– Swivel rear DVD changer -R162- into luggage compartment.

– Unscrew bolt -1- (6 Nm) and nuts -2-, -4- and -5- (6 Nm).

– Swivel retainer into luggage compartment.

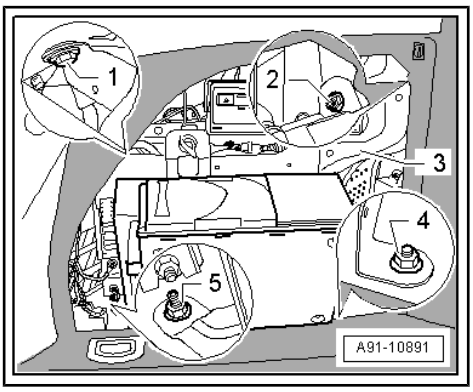

Installing

– Installation is performed in reverse sequence.

Protected by copyright. Copying for private or commercial purposes, in part or in whole, is not permitted unless authorised by AUDI AG. AUDI AG does not guarantee or accept any liability with respect to the correctness of information in this document. Copyright by AUDI AG.

21.13 Removing and installing additional connections unit for video and audio -R176-

– Switch off all electrical equipment.

– Remove ignition key.

Removing

– Remove rear storage compartment ⇒ General body repairs, interior; Rep. Gr. 68 .

The additional connections unit for video and audio -R176- -1- has sensitive retaining tabs -arrows-.

– Carefully unclip additional connections unit for video and audio -R176- -1- at retaining tabs -arrows- from behind.

– Pull additional connections unit for video and audio -R176- -1- out of storage compartment.

– Unplug connector on back of additional connections unit for video and audio -R176- -1-.

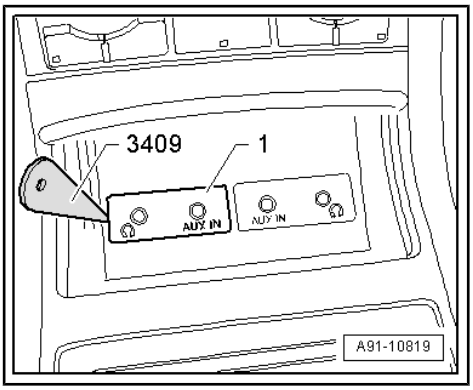

Installing

– Installation is performed in reverse sequence.

21.14 Removing and installing display units in head restraints

21.14.1 Removing and installing multimedia system display unit 1 -Y22-

The procedure for removing and installing multimedia system display unit 1 -Y22- and multimedia system display unit 2 -Y23- is the same.

– Switch off all electrical equipment.

– Remove ignition key.

Protected by copyright. Copying for private or commercial purposes, in part or in whole, is not permitted unless authorised by AUDI AG. AUDI AG does not guarantee or accept any liability with respect to the correctness of information in this document. Copyright by AUDI AG.

Removing

Multimedia system display unit 1 -Y22- is engaged with mounting frame in head restraint.

For this purpose two grooves -2- are provided on both sides of multimedia system display unit 1 -Y22- and two tabs -1- on mounting frame in head restraint.

Press both tabs evenly with a flat tool.

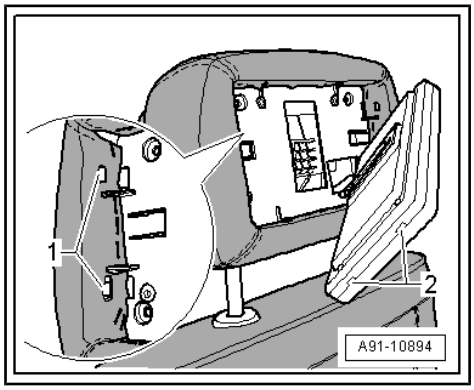

Suitable tools are commercially available plastic spatulas -1- with the following dimensions

a = approx. 70 mm

b = approx. 100 mm

Thickness = max. 0.5 mm

All edges rounded

Do not damage leather or fabric head restraint cover and avoid pressure marks.

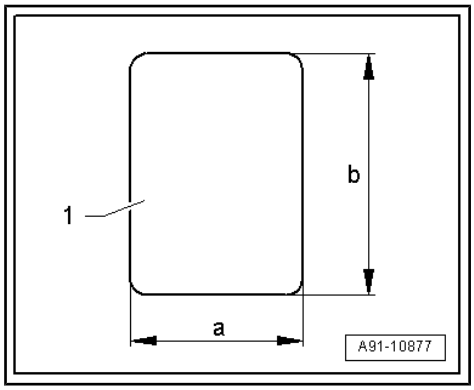

– Press in plastic spatulas -1- between head restraint -2- and multimedia system display unit 1 -Y22- -3- in direction of -arrow A- until tabs -arrows B- are pushed back.

Apply gentle sideways pressure to plastic spatula -1- to swivel multimedia system display unit 1 -Y22- -3- out of head restraint -2-.

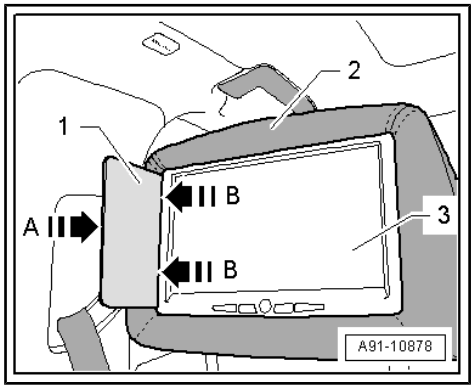

– Unplug connector -2- in head restraint -1- and detach multimedia system display unit 1 -Y22- -3-.

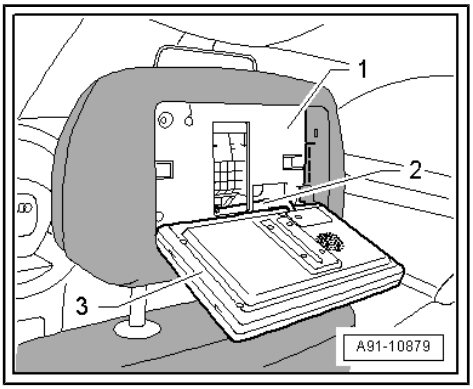

Installing

– Plug in connector -2-.

– Press multimedia system display unit 1 -Y22- -3- evenly into head restraint -1- until it engages audibly.

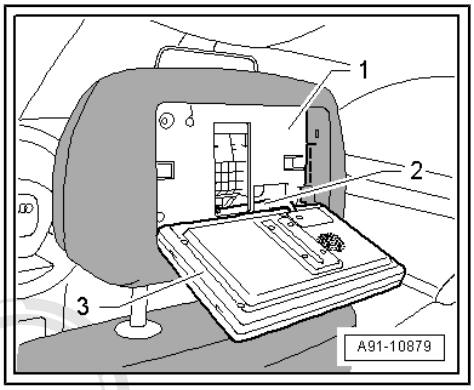

21.14.2 Removing and installing display unit wiring in backrest

For removing and and installing the display unit wiring to the multimedia system display unit 1 -Y22- the bottom backrest cover must be removed.

– Switch off all electrical equipment.

– Remove ignition key.

Removing

Protected by copyright. Copying for private or commercial purposes, in part or in whole, is not permitted unless authorised by AUDI AG. AUDI AG does not guarantee or accept any liability with respect to the correctness of information in this document. Copyright by AUDI AG.

– Remove the bottom backrest cover ⇒ General body repairs, interior; Rep. Gr. 72 .

– Remove multimedia system display unit 1 -Y22- in head restraint ⇒ page 283 .

Display unit wiring is fitted in rail of head restraint. If the display unit wiring is defective, it must be unplugged at the bottom connector.

– Unplug connector of black display unit wiring at bottom of seat and disconnect contacts at connector housing.

– Cut through cable ties along length of wiring in backrest -arrows-.

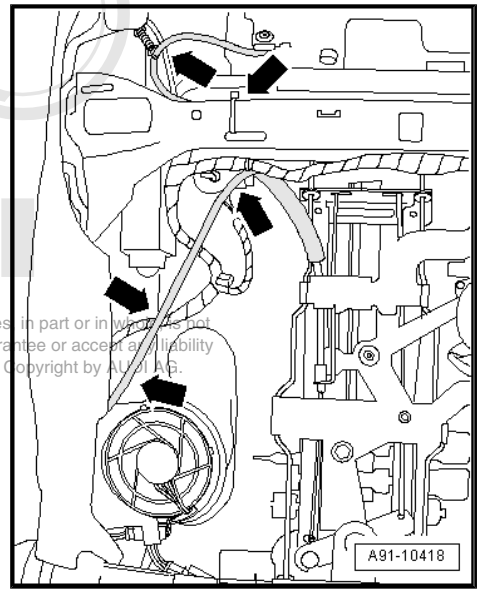

Note

For subsequent fitting of the new display unit wiring, it is helpful to take a photograph or make a drawing of the wire routing in the backrest prior to removal.

The display unit wiring is routed along the seat wiring harness in the bottom section of the seat.

Protected by copyright. Copying for private or commercial purposes, in part or in whole, is not permitted unless authorised by AUDI AG. AUDI AG does not guarantee or accept any liability with respect to the correctness of information in this document. Copyright by AUDI AG.

– Cut through all the cable ties.

– Pull display unit wiring -arrows- upwards out of head restraint.

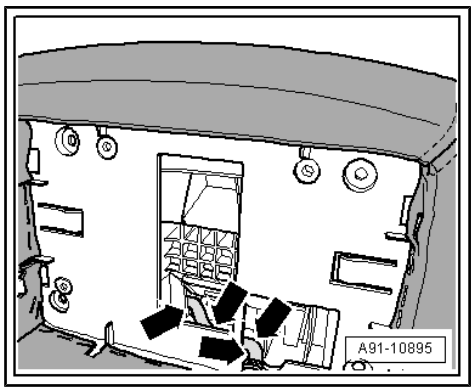

Installing

The display unit wiring is supplied without the bottom connector.

– Guide the free end of the display unit wiring -arrows- through the head restraint.

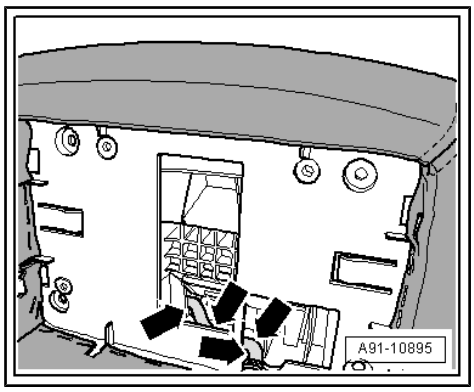

– Mark on display unit wiring

  dimension a = 80 mm

and

  dimension b = 230 mm.

The dimensions given represent the securing points. Also refer to “old” display unit wiring.

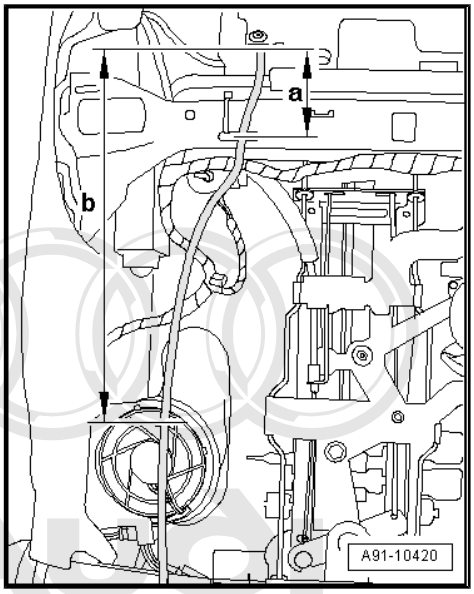

– Secure display unit wiring at “dimension a” to spring (top left) -arrow 1-.
– Make a loop and secure display unit wiring at “dimension b” on seat wiring harness -arrow 3- from the rear.
– Secure display unit wiring to backrest metal panel -arrow 2-.
– It is important to ensure that display unit wiring from end of head restraint rail to securing point -arrow 2- can follow movements of adjustable active head restraint without becoming trapped or tensioned.

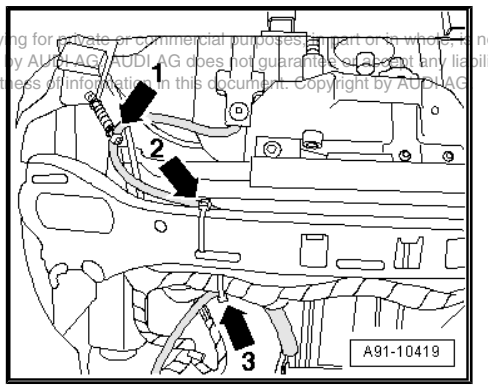

Protected by copyright. Copying for private or commercial purposes, part of is whole, is not permitted unless authorised by AUDI AG. AUDI AG does not guarantee or accept any liability with respect to the correctness of information in this document. Copyright by AUDI AG.

– Route display unit wiring on backrest wiring harness and seat wiring harness -arrows- further, as far as connector on seat wiring harness.

Fit 12-pin connector to display unit wiring after completing work on seat.

Pin assignment ⇒ page 338 .

– Perform further installation in reverse sequence.

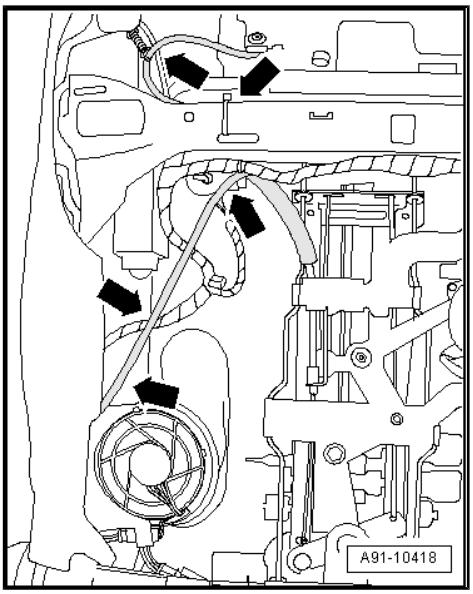

21.15 Removing and installing storage tray for remote controls

Special tools and workshop equipment required

♦ Removal wedge -3409-

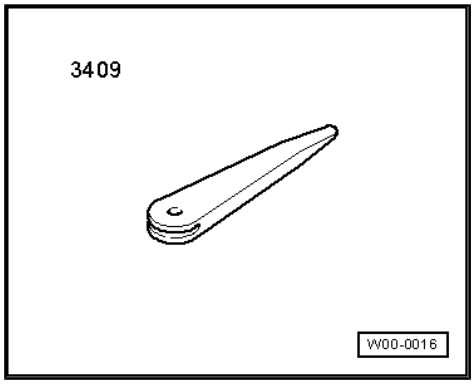

– Switch off all electrical equipment.
– Remove ignition key.

Removing

The storage tray is bonded to the storage compartment in the rear armrest.

– Take out remote controls -1- and -2-.
– Mask the edges to protect the centre armrest.
– Carefully lever the storage tray out of the storage compartment -arrows- using removal wedge -3409- .

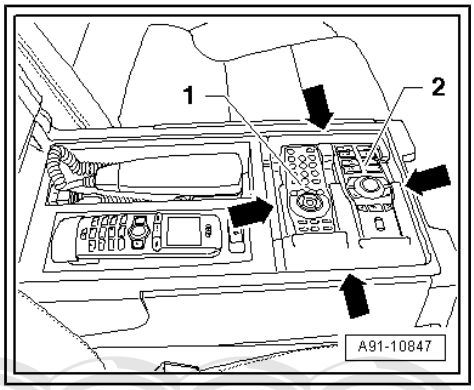

Installing

– Apply adhesive to bottom sides of storage tray.
– Carefully press storage tray into storage compartment until upper edges of tray and storage compartment are flush.
– Remove surplus adhesive if necessary.

Protected by copyright. Copying for private or commercial purposes, in part or in whole, is not permitted unless authorised by AUDI AG. AUDI AG does not guarantee or accept any liability with respect to the correctness of information in this document. Copyright by AUDI AG.

22 MFCU (Multi-Function Communication Unit)

22.1 General notes

The “Multi-Function Communication Unit” consists of a fax unit -R73- with a telephone and a unit with hands-free capability.

The fax unit -R73- can be used as printer, scanner and photocopier.

A notebook or PDA can be connected via the LAN interface (Ethernet socket -U21-) to the Internet.

The operation of the MFCU is independent of the other systems in the vehicle.

In addition, rear charger unit for telephone -R151- with telephone handset 2 -R116- is fitted in the rear centre armrest for the existing telephone system in the vehicle.

Further Information ⇒ Owner's manual “Multi Functional Communication Unit” .

Repairing aerial wiring ⇒ Electrical system; Rep. Gr. 97 .

Protected by copyright. Copying for private or commercial purposes, in part or in whole, is not permitted unless authorised by AUDI AG. AUDI AG does not guarantee or accept any liability with respect to the correctness of information in this document. Copyright by AUDI AG.

22.2 MFCU - layout

1 - Rear right microphone -R145- in rear interior light -W43-

2 - Telephone and navigation systems loudspeaker -R39- in B-pillar trim (right-side)

3 - Aerial 2 for telephone -R127- in rear bumper

4 - Fax unit -R73- in rear centre console

5 - Contact switch for fax unit -F86- under rear centre console

6 - Multi-pin connector, 4-pin, black (T4ah), voltage supply, beneath centre console

7 - Fax unit control unit behind luggage compartment side trim (left-side)

8 - Ethernet socket -U21- in mounting for fax unit handset

9 - Fax unit handset in storage compartment in rear centre armrest

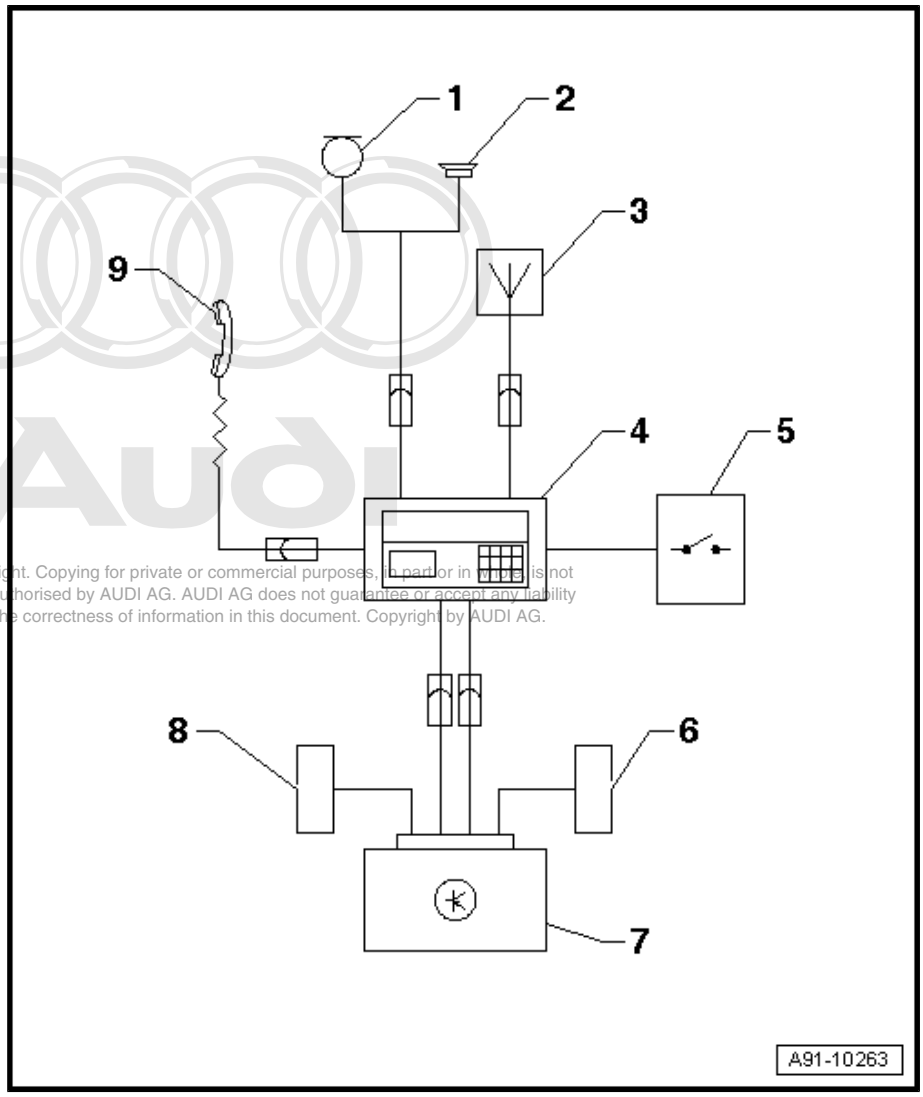

Protected by copyright. Copying for private or commercial purposes, in part or in whole, is not permitted unless authorised by AUDI AG. AUDI AG does not guarantee or accept any liability with respect to the correctness of information in this document. Copyright by AUDI AG.

22.3 Connectors on fax unit control unit

Connectors

A - Aerial connection (not used)

B - Multi-pin connector, 54-pin, black (T54a)

Note

Contacts which are not listed are not used.

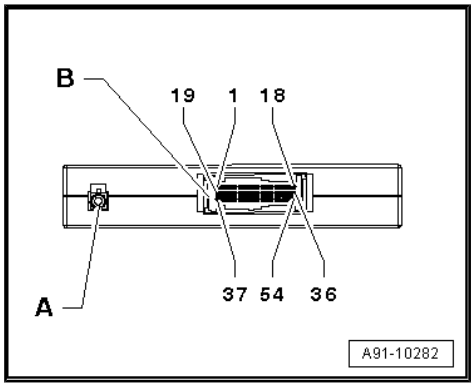

B - Multi-pin connector, 54-pin, black (T54a)

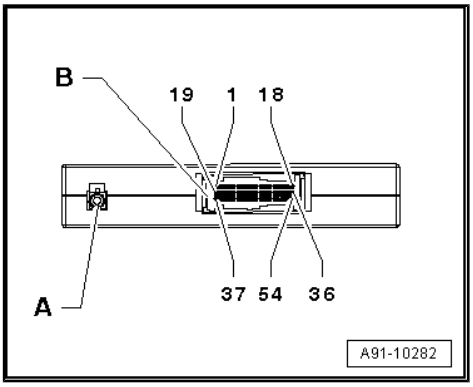

1 - Terminal 30
2 - Terminal 30
3 - U-Plus
4 - U-Minus
5 - LED-ON
6 - ON-OFF
7 - Switch
8 - RXD-COM4
9 - CTS-COM4
10 - Beepp
11 - ETHRXDN
12 - ETHTXDN
13 - ETH4A
14 - ETH4B
17 - USBP1
19 - Terminal 31
20 - Terminal 31
21 - U-Plus (Mobile phone ON)
22 - U-Minus
23 - Temp-PWR
25 - TXT-COM4
26 - DCD-COM4
27 - RTS-COM4
28 - BeepN
29 - ETHRXDP
30 - ETHTXDP
31 - ETH1B
32 - ETH1A
35 - USBN1
37 - Terminal 15
41 - Screen
48 - Screen
52 - Screen
54 - Screen

Protected by copyright. Copying for private or commercial purposes, in part or in whole, is not permitted unless authorised by AUDI AG. AUDI AG does not guarantee or accept any liability with respect to the correctness of information in this document. Copyright by AUDI AG.

Multi-pin connector, 4-pin, black (T4ah)

1 - Switched terminal 30 from current supply relay -J16- in relay and fuse holder in luggage compartment (right-side)

2 - Terminal 31 from earth point in luggage compartment (right-side)

3 - Terminal 30 from communications fuse -S254- in relay and fuse holder in luggage compartment (right-side)

4 - Terminal 15 from fuse 16 on fuse holder B -SB16- in fuse holder in dash panel (left-side)

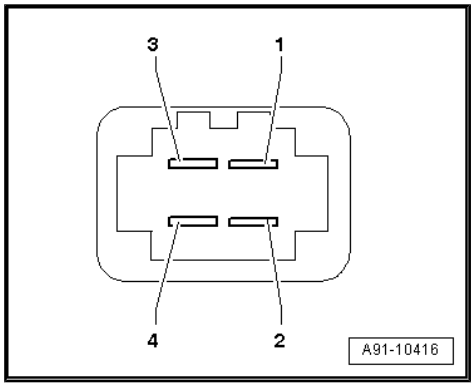

22.4 Overview of fitting locations

1 - Telephone and navigation systems loudspeaker -R39-

- ❑ In B-pillar trim (right-side)
- ❑ Removing and installing ⇒ page 351

2 - Rear centre armrest (in open position) with

- Telephone handset 2 -R116-

- ❑ Adapting ⇒ page 164

- Rear charger unit for telephone -R151-

- ❑ Removing and installing ⇒ page 352

- Storage tray for remote controls

- ❑ Removing and installing ⇒ page 285

- Fax unit handset

- ❑ Removing and installing mounting for handset ⇒ page 353

- Ethernet socket -U21-

3 - Rear right microphone -R145-

- ❑ In rear interior light -W43-
- ❑ Removing and installing ⇒ page 351

4 - Aerial -R11-

- ❑ In rear bumper
- ❑ Removing and installing ⇒ page 351

5 - Fax unit control unit

- ❑ Behind luggage compartment side trim (left-side)
- ❑ Pin assignment ⇒ page 348
- ❑ Removing and installing ⇒ page 352

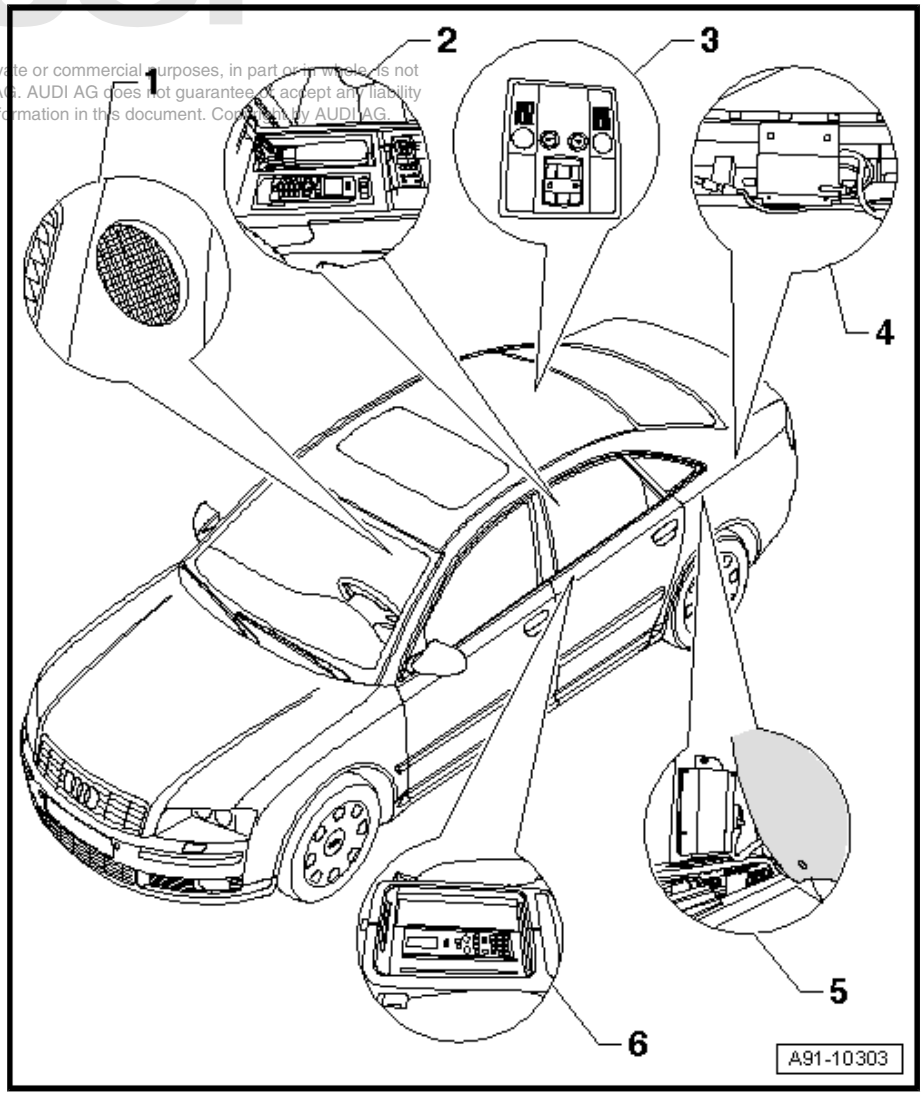

Protected by copyright. Copying for private or commercial purposes, in part or in whole, is not permitted unless authorised by AUDI AG. AUDI AG does not guarantee or accept any liability with respect to the correctness of information in this document. Copyright by AUDI AG.

6 - Fax unit -R73-

- ❑ In rear centre console
- ❑ Removing and installing ⇒ page 353

22.5 Removing and installing aerial -R11-

– Switch off all electrical equipment.

– Remove ignition key.

Removing

Protected by copyright. Copying for private or commercial purposes, in part or in whole, is not permitted unless authorised by AUDI AG. AUDI AG does not guarantee or accept any liability with respect to the correctness of information in this document. Copyright by AUDI AG.

– Remove rear bumper cover ⇒ General body repairs, exterior; Rep. Gr. 63 .

– Use suitable tool to prise aerial -R11- -2- (right and left) -arrows- from mounting points on bumper -1-.

– Unplug electrical connector.

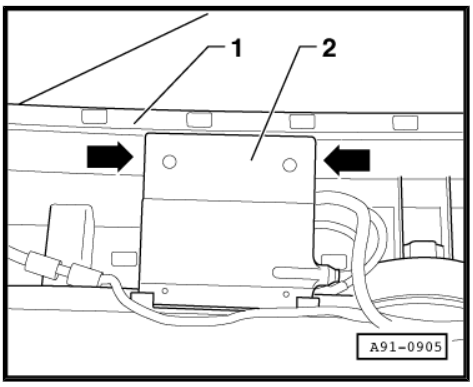

Installing

– Installation is performed in reverse sequence.

22.6 Removing and installing rear right microphone -R145-

– Switch off all electrical equipment.

– Remove ignition key.

Removing

– Remove rear interior light -W43- ⇒ Electrical system; Rep. Gr. 96 .

– Unplug connector -1-.

– Unscrew bolts -3-, -4- and -5- (1 Nm) and lift off rear right microphone -R145- -2-.

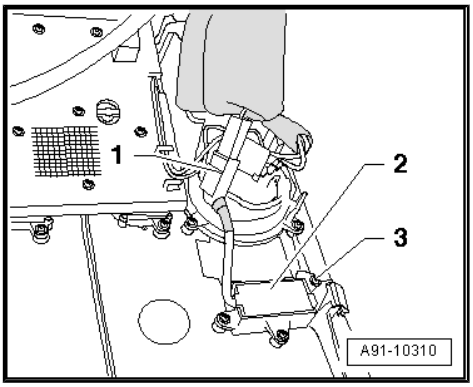

Installing

– Installation is performed in reverse sequence.

22.7 Removing and installing telephone and navigation system loudspeaker -R39-

– Switch off all electrical equipment.

– Remove ignition key.

Removing

– Remove bottom B-pillar trim (right-side) ⇒ General body repairs, interior; Rep. Gr. 70 .

– Unplug connectors and remove trim.

– Unscrew ring -1- on outside of telephone and navigation systems loudspeaker -R39- -2- in direction of -arrow- and remove telephone and navigation systems loudspeaker -R39- -2- from trim towards front.

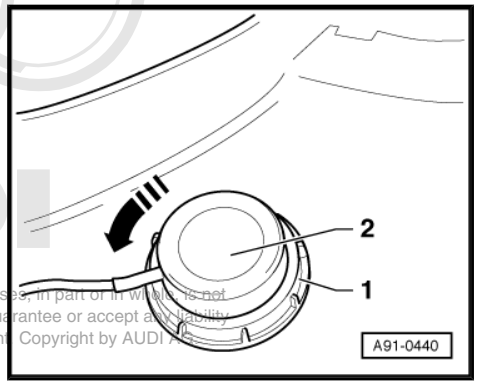

Installing

– Installation is performed in reverse sequence.

Protected by copyright. Copying for private or commercial purposes, in part or in whole, is not permitted unless authorised by AUDI AG. AUDI AG does not guarantee or accept any liability with respect to the correctness of information in this document. Copyright by AUDI AG.

22.8 Removing and installing fax unit control unit

– Switch off all electrical equipment.

– Remove ignition key.

Removing

– Remove luggage compartment side trim (left-side) ⇒ General body repairs, interior; Rep. Gr. 70 .

– Unplug connector -3- on fax unit control unit -2-.

– Unscrew bolts -1- and -4- (3 Nm) and detach fax unit control unit -2-.

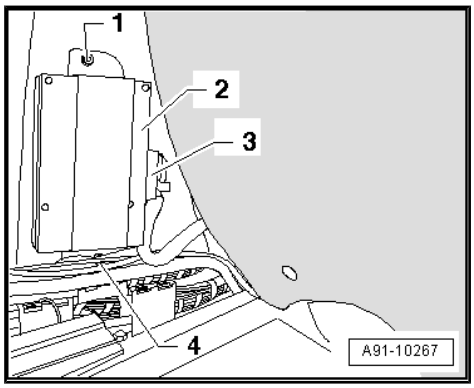

Installing

– Installation is performed in reverse sequence.

22.9 Removing and installing rear charger unit for telephone -R151- (rear centre armrest)

Remove rear centre armrest prior to removing rear charger unit for telephone -R151- .

– Switch off all electrical equipment.

– Remove ignition key.

Removing

– Remove rear centre armrest ⇒ General body repairs, interior; Rep. Gr. 68 .

– Detach top section from bottom section ⇒ General body repairs, interior; Rep. Gr. 68 .

– Unscrew bolts -1- and -2- (2 Nm) on reverse side of top section.
– Take mounting for rear charger unit for telephone -R151- out of top section.

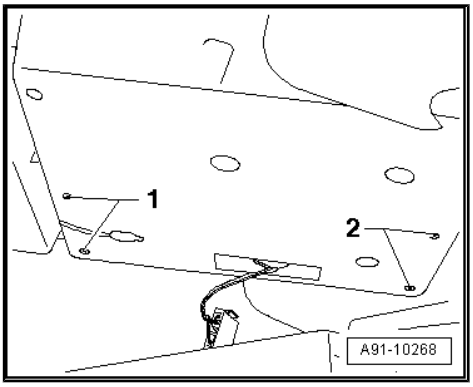

– Turn mounting -3- over and unplug connector -2-.
– Unscrew bolts -arrows- (2 Nm).
– Press rear charger unit for telephone -R151- -1- out of mounting -3-.

Installing

– Installation is performed in reverse sequence.

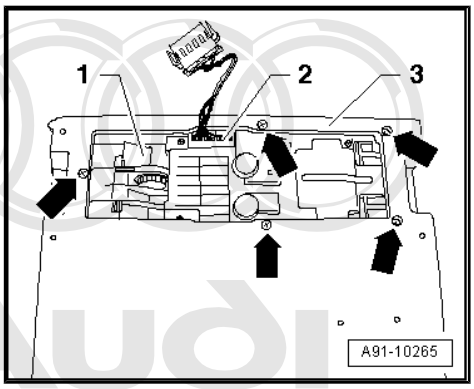

22.10 Removing and installing mounting for handset for fax unit

Protected by copyright. Copying for private or commercial purposes, in part or in whole, is not permitted unless authorised by AUDI AG. AUDI AG does not guarantee or accept any liability with respect to the correctness of information in this document. Copyright by AUDI AG.

– Switch off all electrical equipment.
– Remove ignition key.

Removing

– Open cover for rear centre armrest.
– Unscrew bolts -1- (2 Nm).
– Carefully lift off mounting -2- from storage compartment -3-.

Installing

– Installation is performed in reverse sequence.

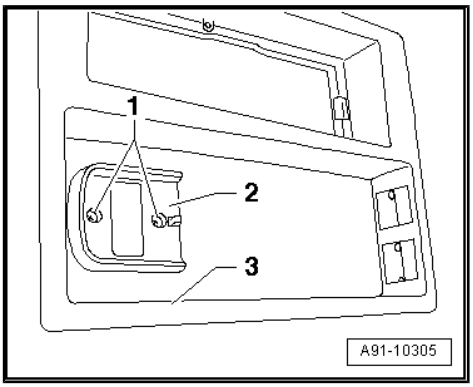

22.11 Removing and installing fax unit -R73-

The centre armrest must be removed prior to removing the fax unit -R73- .

– Switch off all electrical equipment.
– Remove ignition key.

Removing

– Remove centre armrest ⇒ General body repairs, interior; Rep. Gr. 72 .

– Take cover -1- out of rear centre console.
– Unscrew bolts -2- (4 Nm) located underneath.

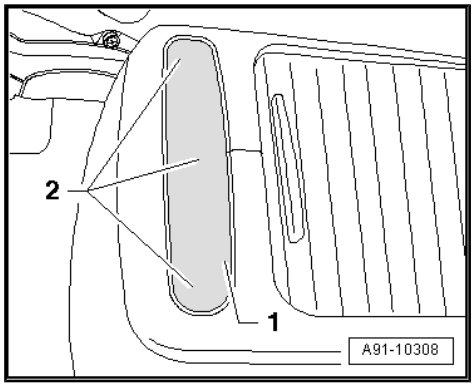

– Unscrew bolts -1- and -2- (4 Nm) on side of armrest.
– Swivel rear centre console in direction of -arrow- towards the front.
– Unplug connectors for fax unit -R73- and remove rear centre console with fax unit -R73- from vehicle.

Vehicles with extended centre console:

– Remove the extension for centre console ⇒ General body repairs, interior; Rep. Gr. 68 .

All versions

– Turn centre console over so that bottom section faces upwards.

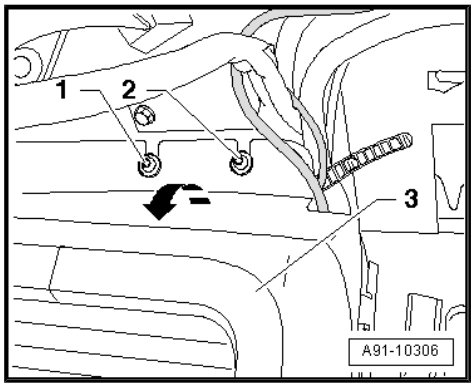

– Unscrew bolts -1- to -5- (3 Nm) and remove housing with fax unit -R73- from centre console.
– Make sure that the wiring harness on fax unit -R73- is not damaged during removal.

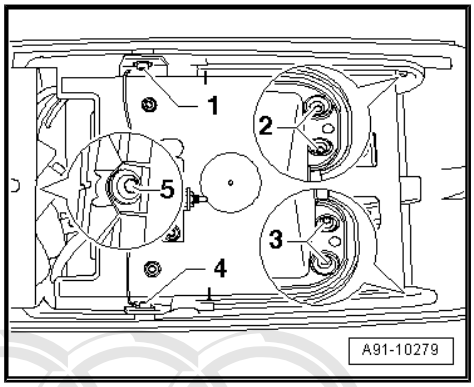

– Unscrew bolts -arrows- (2 Nm) on reverse side.
– Turn housing back over onto reverse side.

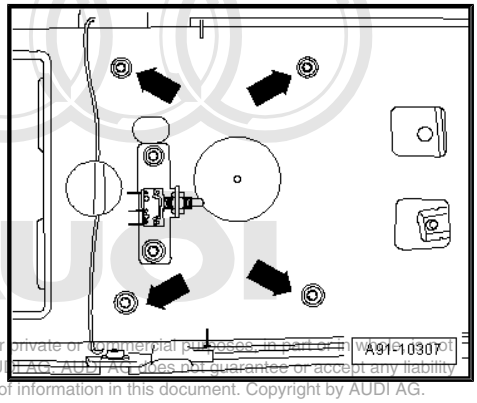

Protected by copyright. Copying for private or commercial purposes, in part or in whole, is not permitted unless authorised by AUDI AG. AUDI AG does not guarantee or accept any liability with respect to the correctness of information in this document. Copyright by AUDI AG.

– Remove fax unit -R73- -1- in direction of -arrow- from housing -2-.

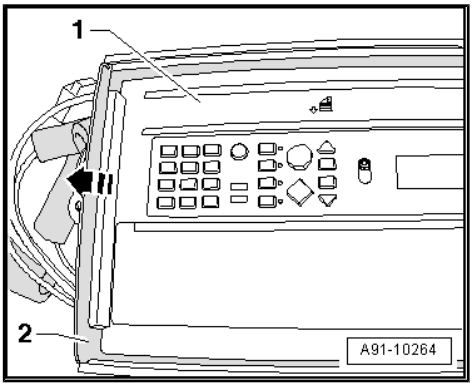

Installing

– Installation is performed in reverse sequence.

22.12 Removing and installing fax unit contact switch -F86-

The fax unit contact switch -F86- is secured to the bottom of the fax unit housing. The fax unit contact switch -F86- signals to the fax unit -R73- whether the roller blind is open or closed. If the roller blind is closed, incoming fax messages will only be stored by the fax unit -R73- . If the roller blind is open, incoming fax messages will be printed out.

– Switch off all electrical equipment.

– Remove ignition key.

Removing

– Remove rear centre console ⇒ General body repairs, interior; Rep. Gr. 68 .

– Turn centre console over so that bottom section faces upwards.

Vehicles with “lengthways” roller blind

– Close roller blind.

– Unplug connector at fax unit contact switch -F86- .

– Unscrew nut -3- on fax unit contact switch -F86- -1-.

– Detach fax unit contact switch -F86- -1- from bracket.

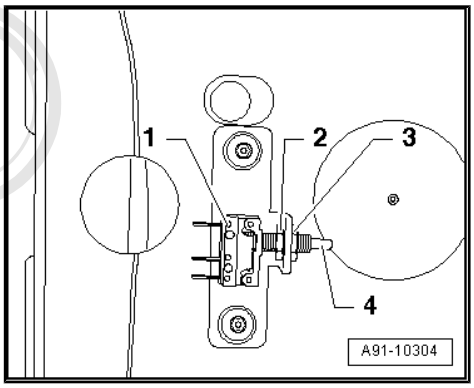

Installing

– Make sure fax unit contact switch -F86- is correctly adjusted when installing.

Protected by copyright. Copying for private or commercial purposes, in part or in whole, is not permitted unless authorised by AUDI AG. AUDI AG does not guarantee or accept any liability with respect to the correctness of information in this document. Copyright by AUDI AG.

– Adjust the fax unit contact switch -F86- -1- via the two nuts -2- and -3- so that operating rod -4- switches fax unit contact switch -F86- when the roller blind is open.

– Perform further installation in reverse sequence.

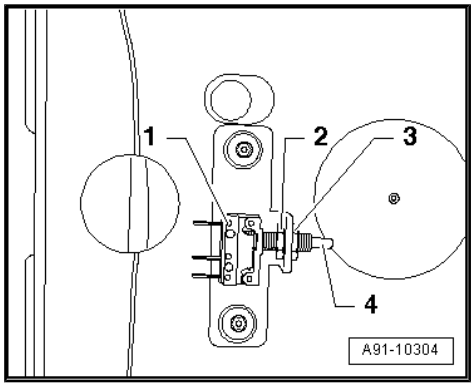

Vehicles with “lateral” roller blind

– Close roller blind and unplug connector at fax unit contact switch -F86- .

– Remove bolts -1- and -2- (1 Nm) from housing in direction of -arrow B-.

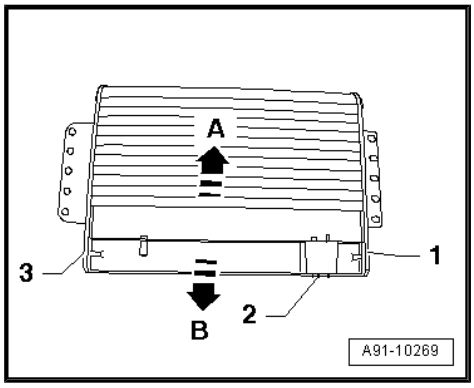

Installing

– Make sure fax unit contact switch -F86- is correctly adjusted when installing.

– Screw in two bolts -1- and -3- only a few turns.

– Adjust position of fax unit contact switch -F86- -2- by moving fax unit contact switch -F86- in direction of -arrows A and B- with the roller blind open.

The fax unit contact switch -F86- is in proper position if it is switched when the roller blind is open all the way.

– Perform further installation in reverse sequence.

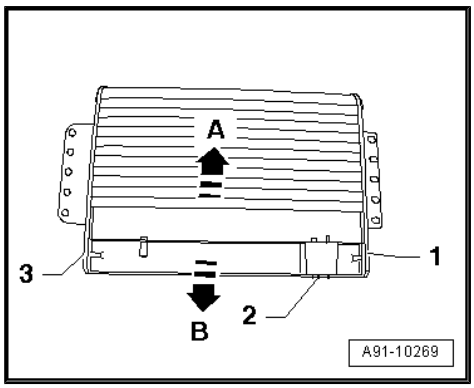

Protected by copyright. Copying for private or commercial purposes, in part or in whole, is not permitted unless authorised by AUDI AG. AUDI AG does not guarantee or accept any liability with respect to the correctness of information in this document. Copyright by AUDI AG.

23 Reversing camera system

23.1 General notes

The reversing camera system provides assistance to the driver when driving the vehicle backwards; the information about the prevailing traffic conditions behind the vehicle is supplied to the driver via the display unit for front information display and operating unit control unit -J685- .

The system will be switched on as soon as reverse gear is engaged. The system can be activated manually by operating the parking aid button -E266- in centre console.

Protected by copyright. Copying for private or commercial purposes, in part or in whole, is not permitted unless authorised by AUDI AG. AUDI AG does not guarantee or accept any liability with respect to the correctness of information in this document. Copyright by AUDI AG.

The reversing camera system consists of the following components:

- Reversing camera -R189-
- Reversing camera system control unit -J772-
- Control unit for front display and information control panel -J523-
- Steering wheel with steering angle sender -G85-

As an option, other control units may also be installed (TV tuner -R78-).

Do not fit an additional number plate on vehicles equipped with reversing camera system as this will impair the function of the reversing camera system.

Fault finding is performed via the “Guided Fault Finding” ⇒ Vehicle diagnosis, testing and information system VAS 5051.

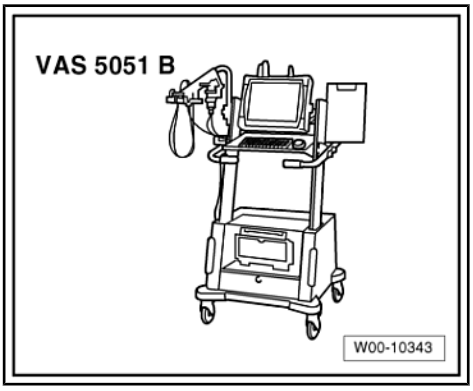

23.2 Reversing camera system (up to week 35/08) - layout

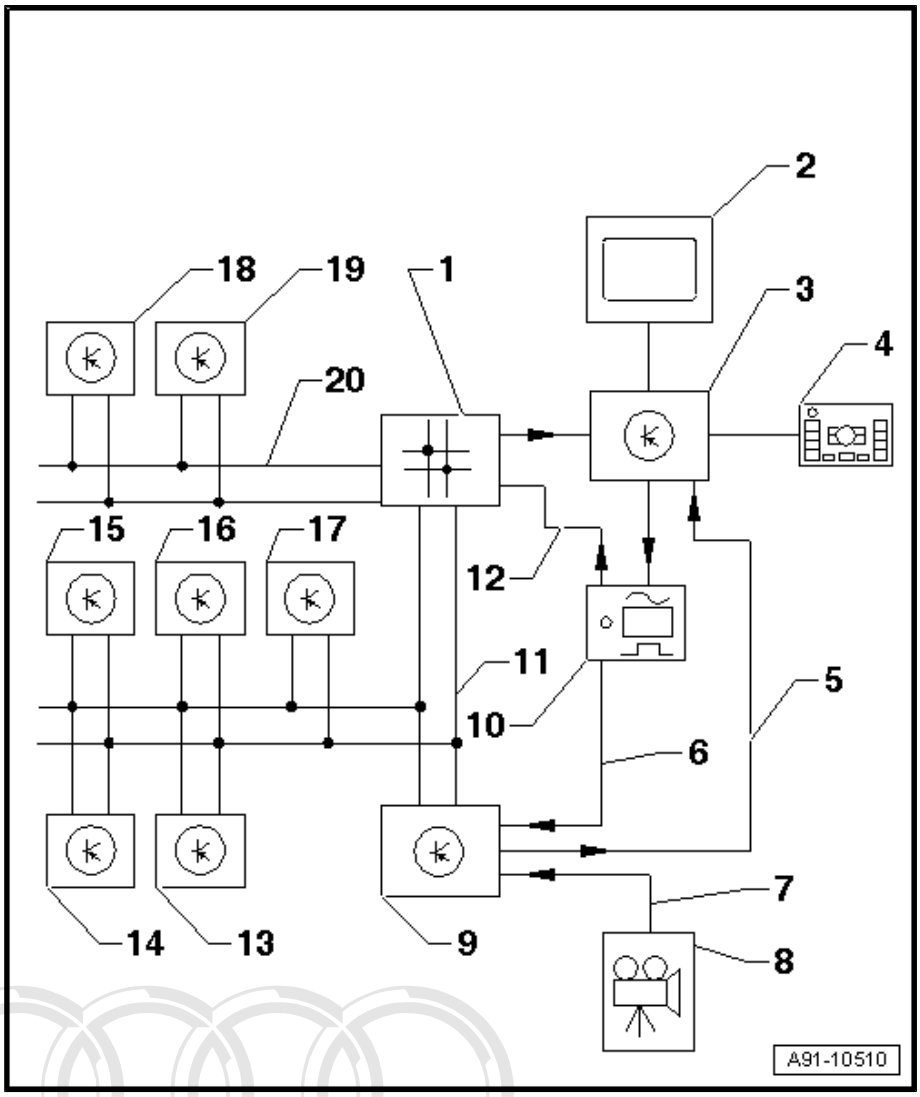

1 - Data bus diagnostic interface -J533- behind glove box

2 - Display unit for front information display and operating unit control unit -J685- in dash panel (centre)

3 - Control unit for front display and information control panel -J523- behind glove box

4 - Multimedia system operating unit -E380- in centre console (bottom)

5 - FBAS wire from reversing camera system control unit -J772-

6 - FBAS wire from TV tuner -R78-

7 - FBAS wire from reversing camera -R189-

8 - Reversing camera -R189- in rear lid

9 - Reversing camera system control unit -J772- behind luggage compartment side trim (front left)

10 - TV tuner -R78- behind luggage compartment side trim (left-side)

11 - CAN bus (convenience)

12 - MOST bus

13 - Parking aid control unit -J446- behind luggage compartment side trim (left-side)

14 - Onboard supply control unit -J519- behind storage compartment (front left)

15 - Convenience system central control unit -J393- behind luggage compartment side trim (right-side)

16 - Trailer detector control unit -J345- behind luggage compartment side trim (right-side)

17 - Entry and start authorisation control unit -J518- behind luggage compartment side trim (right-side)

18 - ABS control unit -J104- in engine compartment

19 - Steering angle sender -G85- on steering column at steering column electronics control unit -J527-

20 - CAN bus (drive train)

Protected by copyright. Copying for private or commercial purposes, in part or in whole, is not permitted unless authorised by AUDI AG. AUDI AG does not guarantee or accept any liability with respect to the correctness of information in this document. Copyright by AUDI AG.

23.3 Reversing camera system (from week 36/08 onwards) - layout

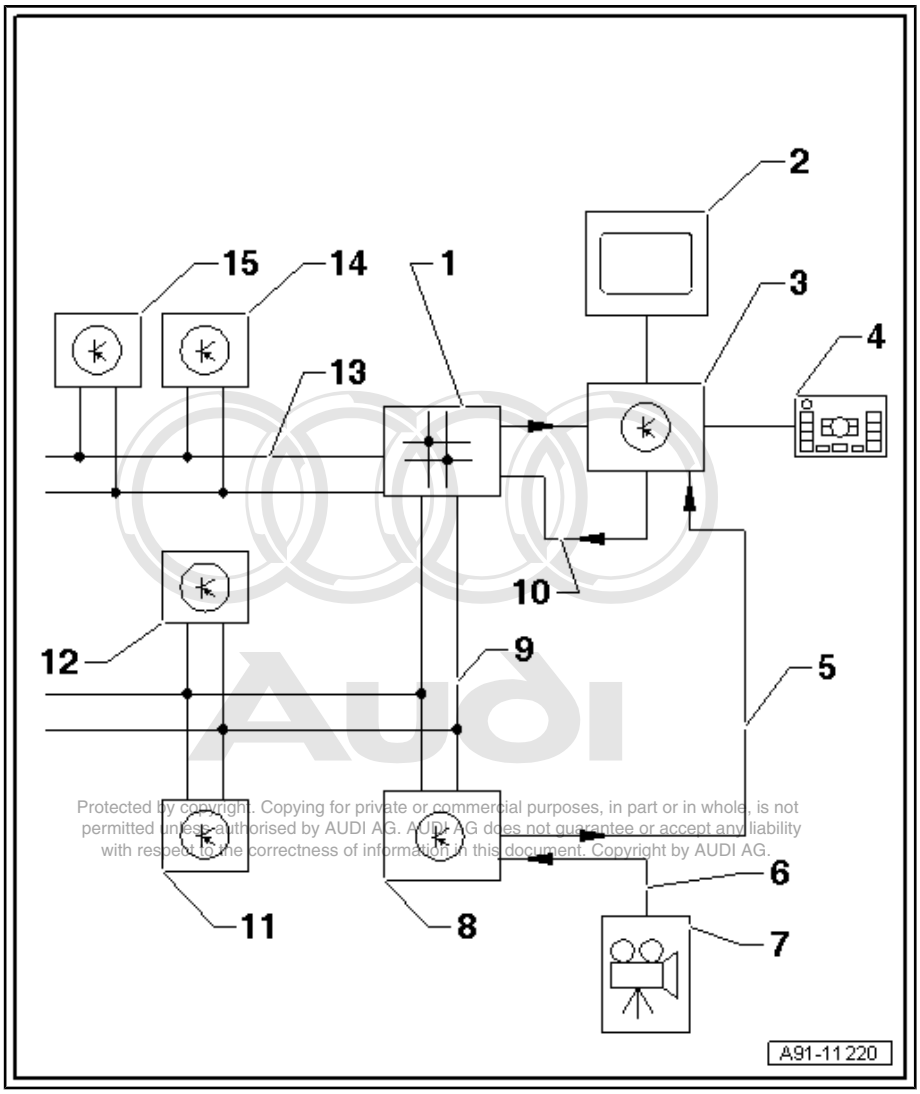

Protected by copyright. Copying for private or commercial purposes, in part or in whole, is not permitted unless authorised by AUDI AG. AUDI AG does not guarantee or accept any liability with respect to the correctness of information in this document. Copyright by AUDI AG.

1 - Data bus diagnostic interface -J533- behind glove box

2 - Display unit for front information display and operating unit control unit -J685- in dash panel (centre)

3 - Control unit 1 for information electronics -J794- in glove box (left-side)

4 - Multimedia system operating unit -E380- in centre console (bottom)

5 - FBAS wire from reversing camera system control unit -J772-

6 - FBAS wire from reversing camera -R189-

7 - Reversing camera -R189- in rear lid

8 - Reversing camera system control unit -J772- behind luggage compartment side trim (front left)

9 - CAN bus (convenience)

10 - MOST bus

11 - Parking aid control unit -J446- behind luggage compartment side trim (left-side)

12 - Trailer detector control unit -J345- behind luggage compartment side trim (right-side)

13 - CAN bus (drive train)

14 - ABS control unit -J104- in engine compartment

15 - Steering angle sender -G85- on steering column at steering column electronics control unit -J527-

23.4 Connectors on reversing camera system control unit -J772-

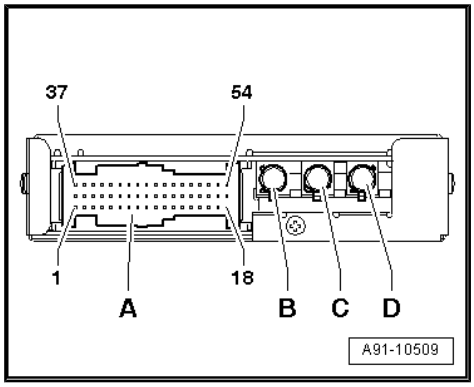

Reversing camera system control unit -J772-

A - Multi-pin connector, 54-pin, black (T54)

B - FBAS input (brown) from TV tuner -R78- (up to week 35/08)

- Not used (from week 36/08 onwards)

C - FBAS output (green) to DVD player -R7- / display unit for front information display and operating unit control unit -J685- (up to week 35/08)

- FBAS output (green) to control unit 1 for information electronics -J794- (from week 36/08 onwards)

D - FBAS input (grey) from reversing camera -R189-

Note

Contacts which are not listed are not used.

A - Multi-pin connector, 54-pin, black (T54)

39 - CAN Bus Low (convenience)

40 - CAN Bus High (convenience)

43 - Terminal 30

44 - Terminal 31

47 - Terminal 31 to reversing camera -R189-

48 - Voltage supply for reversing camera -R189-

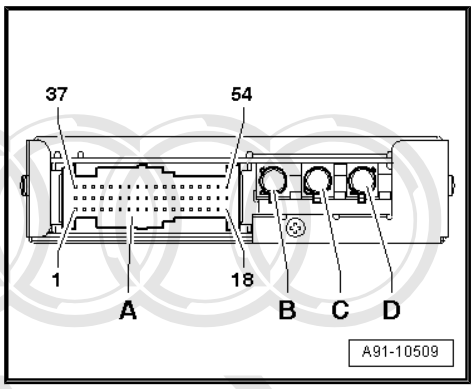

Protected by copyright. Copying for private or commercial purposes, in part or in whole, is not permitted unless authorised by AUDI AG. AUDI AG does not guarantee or accept any liability with respect to the correctness of information in this document. Copyright by AUDI AG.

23.5 Overview of fitting locations

1 - Control unit for front display and information control panel -J523-

- ❑ Behind glove box

- Control unit 1 for information electronics -J794-

- ❑ In glove box (left-side)

2 - Display unit for front information display and operating unit control unit -J685-

- ❑ In dash panel (centre)

3 - Reversing camera -R189-

- ❑ In rear lid next to handle
- ❑ Removing and installing ⇒ page 362

4 - Reversing camera system control unit -J772-

- ❑ Behind luggage compartment side trim (front left)
- ❑ Pin assignment ⇒ page 360
- ❑ Removing and installing ⇒ page 361

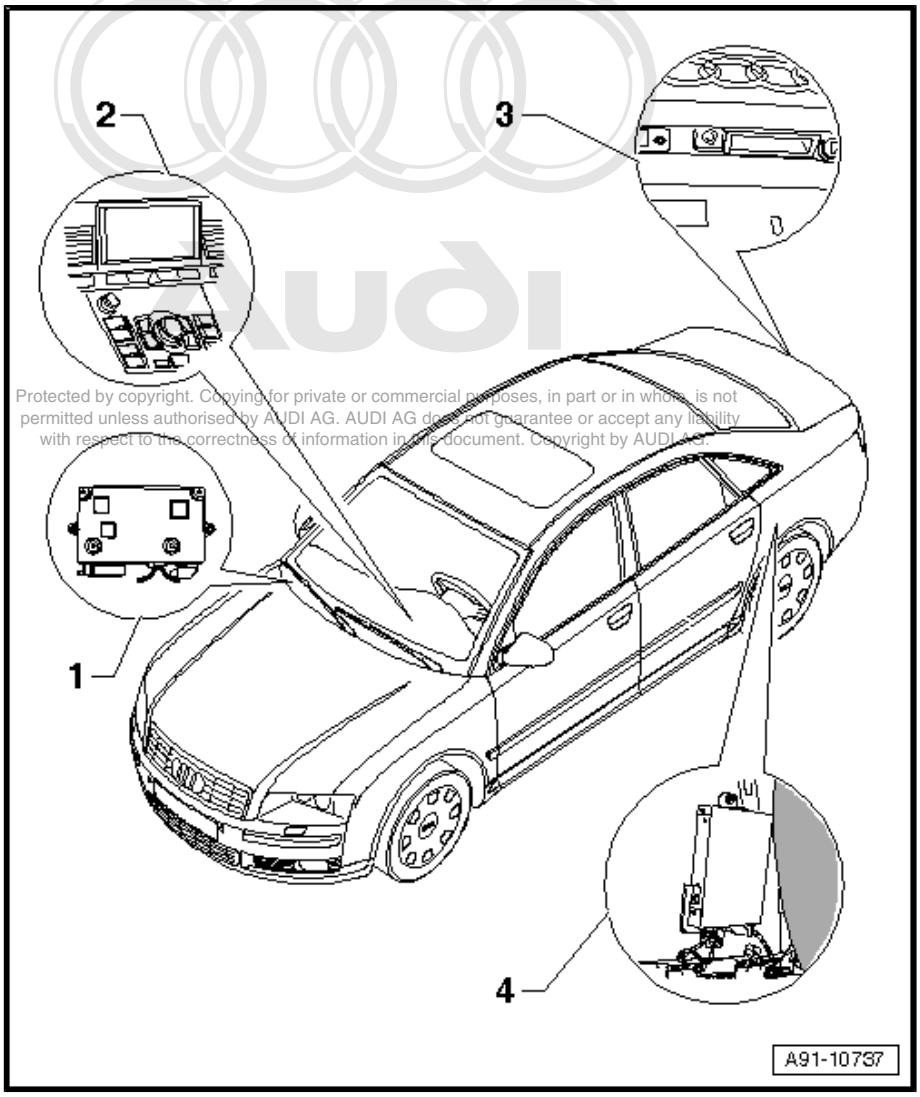

Protected by copyright. Copying for private or commercial purposes, in part or in whole, is not permitted unless authorised by AUDI AG. AUDI AG does not guarantee or accept any liability with respect to the correctness of information in this document. Copyright by AUDI AG.

23.6 Removing and installing reversing camera system control unit -J772-

– When renewing control unit, select “Replacement” function for appropriate control unit in “Guided Fault Finding”.

To do so, use the vehicle diagnostic, testing and information system -VAS 5051- .

– Switch off all electrical equipment.

– Remove ignition key.

Removing

– Remove luggage compartment side trim (left-side) ⇒ General body repairs, interior; Rep. Gr. 70 .

– Unscrew nuts -1- and -3- (8 Nm).
– Unplug connectors -2- and -4- at reversing camera system control unit -J772- -5-.
– Detach reversing camera system control unit -J772- -5- with bracket.

Detaching bracket

Two retaining brackets are bolted to reversing camera system control unit -J772- .

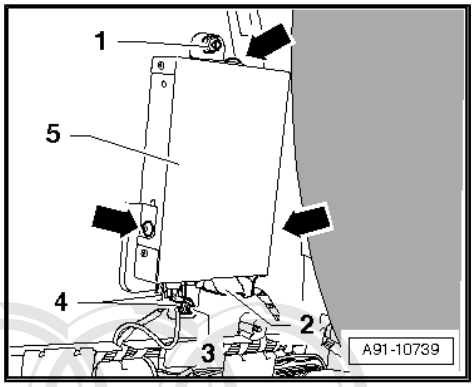

– Unscrew bolts -arrows- (3 Nm) and detach brackets.

Installing

– First install brackets.
– Install reversing camera system control unit -J772- proceeding in reverse order to the steps described for removal.
– Perform calibration ⇒ page 363 .

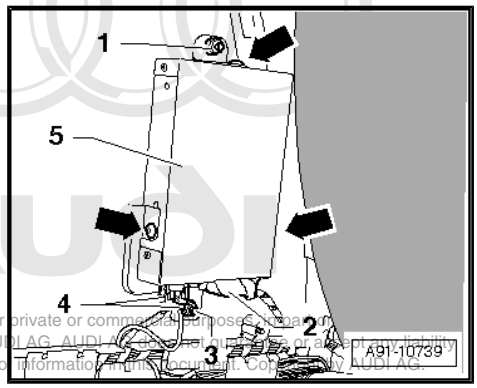

Protected by copyright. Copying for private or commercial purposes, in part, is not permitted unless authorised by AUDI AG. AUDI AG does not guarantee or accept any liability with respect to the correctness of information in this document. Copyright by AUDI AG.

23.7 Removing and installing reversing camera -R189-

– Switch off all electrical equipment.
– Remove ignition key.

Removing

Reversing camera -R189- is equipped with a trailing cable. Vehicle wiring harness couplings are located on left side beneath tool kit.

– Remove rear lid trim ⇒ General body repairs, interior; Rep. Gr. 70 .
– Unscrew bolt -1- (4 Nm).
– Detach retaining plate -2-.

The reversing camera -R189- -3- is secured to handle trim.

– Pull reversing camera -R189- -3- out of handle trim using a suitable tool.

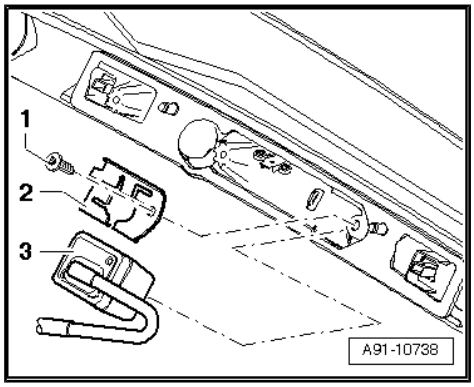

– Unplug connectors -1- and -2-.

Installing

– Installation is performed in reverse sequence.

– Close rear lid.

– Perform calibration ⇒ page 363 .

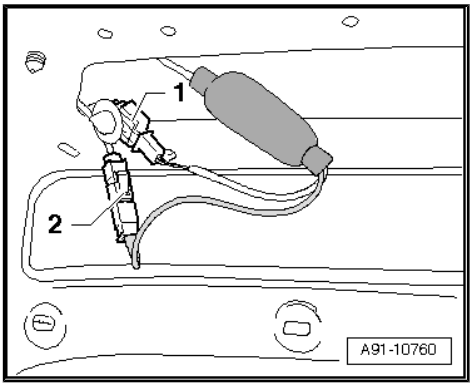

23.8 Calibrating reversing camera system

After performing service work on the vehicle it might be necessary to re-calibrate the system of the reversing camera. This might be required after:

- Removing and installing reversing camera -R189-
- Renewing reversing camera system control unit -J772-
- Performing accident repair work on rear lid
- Performing repair work on rear axle

Special tools and workshop equipment required

- Vehicle diagnosis, testing and information system -VAS 5051B-

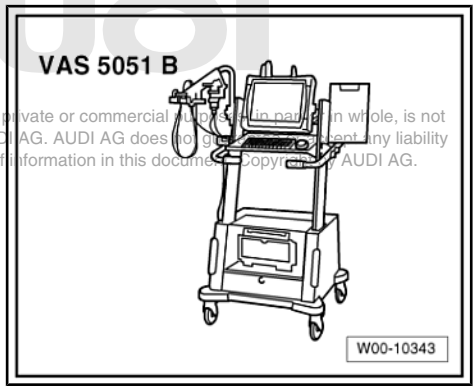

Protected by copyright. Copying for private or commercial purposes, in part or in whole, is not permitted unless authorised by AUDI AG. AUDI AG does not guarantee or accept any liability with respect to the correctness of information in this document. Copyright by AUDI AG.

- Calibration unit -VAS 6350-

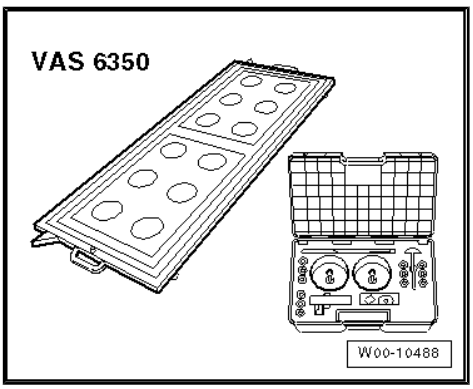

- Spacing laser -VAS 6350/2-

Preparations before starting work

The vehicle must be standing on a firm and even surface in order to perform calibration. Make sure nobody is inside the vehicle when performing calibration. Do not move the vehicle and do not open or close any of the vehicle doors when performing calibration. The rear lid must be closed.

– Connect up ⇒ Vehicle diagnosis, testing and information system VAS 5051.
– Move steering angle sender -G85- to 0 position (wheels in straight-ahead position).

Overview of calibration equipment set-up

1 - Wheel centre mounting -VAS 6350/1-

2 - Wheel centre mounting -VAS 6350/1-

3 - Locating bracket (right-side)

- ❑ Mounting for spacing laser -VAS 6350/2-

4 - Plastic foot

- ❑ Three on underside of calibration unit -VAS 6350/4-
- ❑ Adjustable, for aligning horizontal position of calibration unit -VAS 6350/4-

5 - Linear laser -VAS 6350/3-

- ❑ On calibration unit -VAS 6350/4-
- ❑ Switching on and off ⇒ Owner's Manual

6 - Spacing laser -VAS 6350/2-

- ❑ Operating instructions ⇒ Owner's Manual

7 - Spirit level

- ❑ On calibration unit -VAS 6350/4-
- ❑ For checking horizontal position

8 - Locating bracket (left-side)

- ❑ Mounting for spacing laser -VAS 6350/2-

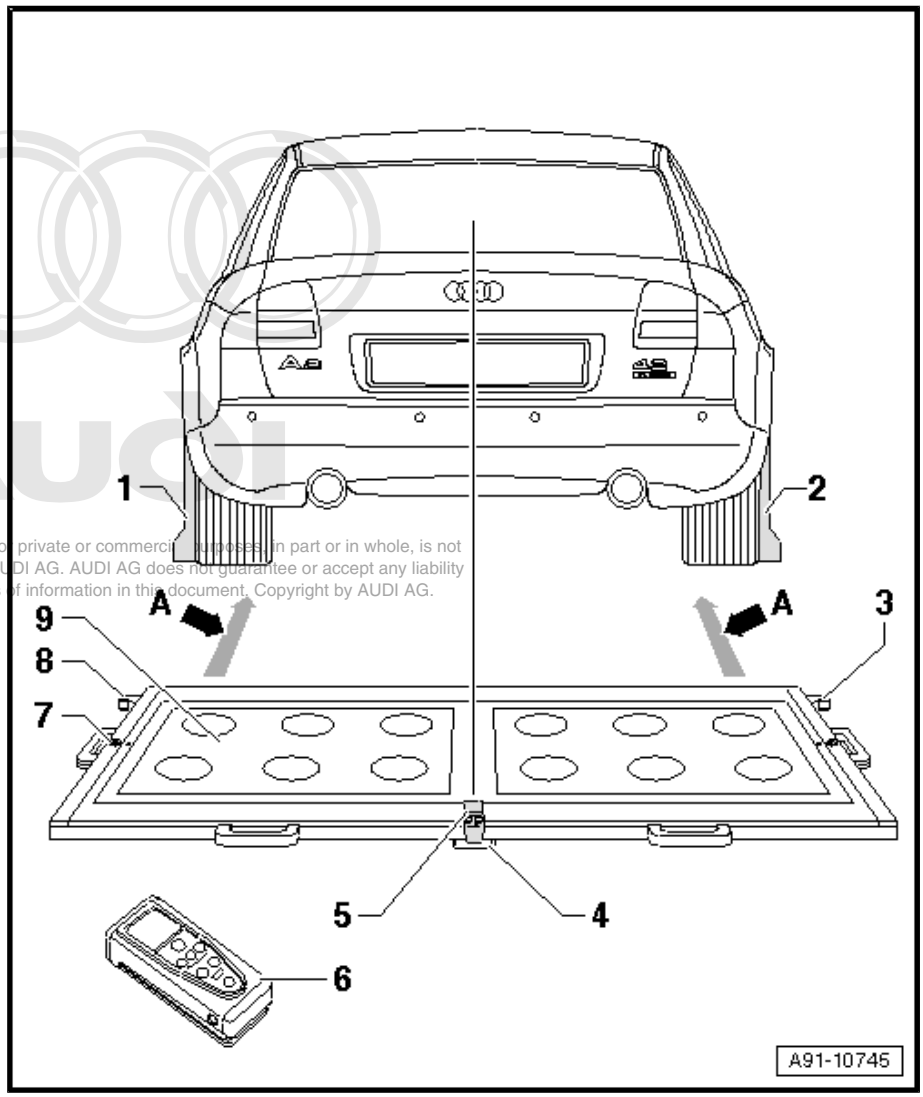

Protected by copyright. Copying for private or commercial purposes, in part or in whole, is not permitted unless authorised by AUDI AG. AUDI AG does not guarantee or accept any liability with respect to the correctness of information in this document. Copyright by AUDI AG.

9 - Calibration unit -VAS 6350/4-

- ❑ -Dimension A- = 1.47 m to 1.90 m between locating brackets of calibration unit -VAS 6350/4- and wheel centre mountings -VAS 6350/1-

Setting up calibration unit -VAS 6350/4-

– Check the bolt hole circle pattern on the wheels.
– Prepare wheel centre mountings -VAS 6350/1- as required.
– To do so, secure three wheel bolt adapters to each wheel centre mounting -VAS 6350/1- to match the hole circle.
– Position paddles on both wheel centre mountings -VAS 6350/1- and secure each paddle with clamping bolt.
– Fit wheel centre mountings -VAS 6350/1- onto wheel bolts on rear wheels.

The wheel centre mountings -VAS 6350/1- are kept in position by the O-rings in the adapters.

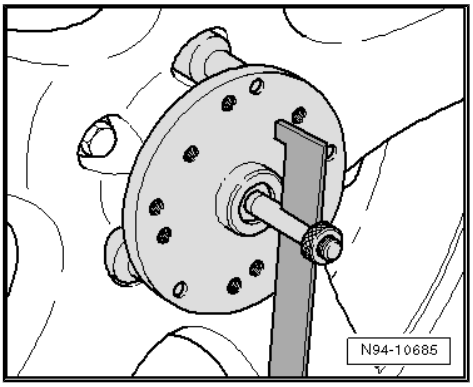

Note

When fitting the wheel centre mountings -VAS 6350/1- onto the wheels, make sure that they are not mounted on any "anti-theft" wheel bolts that might be installed.

– Using clamping bolts adjust paddles so that they are free to move just slightly above the ground.

Make sure the paddles can move freely.

– Position calibration unit -VAS 6350/4- behind vehicle at a distance of 1.47 m to 1.90 m from rear wheels; refer to -dimension A- in overview ⇒ page 364 .

– Move calibration unit -VAS 6350/4- to a horizontal position.

– Turn plastic feet beneath calibration unit -VAS 6350/4- to make air bubble in spirit level move exactly to centre of display -arrow-.

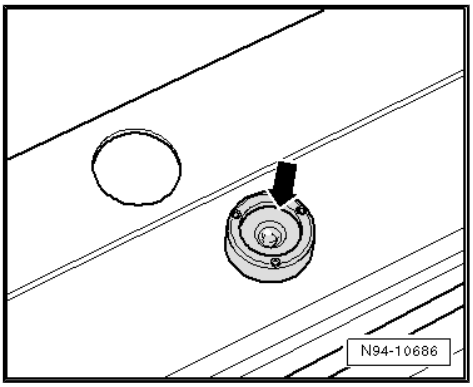

WARNING

Make sure no light is reflected on calibration unit -VAS 6350/4- .

Reflected light impairs the view of the reversing camera -R189- and therefore it may be impossible to perform calibration.

– Switch on linear laser -VAS 6350/3- -1- on calibration unit -VAS 6350/4- and align entire calibration unit -VAS 6350/4- so that laser beam of linear laser -VAS 6350/3- hits centre of Audi rings on rear of vehicle.

– Check whether Audi rings are in the centre on rear of vehicle; readjust laser beam accordingly.

– Switch on the spacing laser -VAS 6350/2- with the ON button.

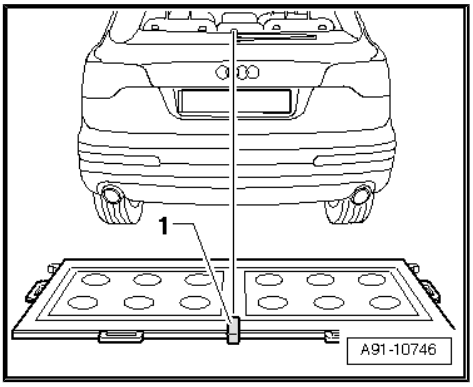

The following display appears and the spacing laser -VAS 6350/2- will be switched on.

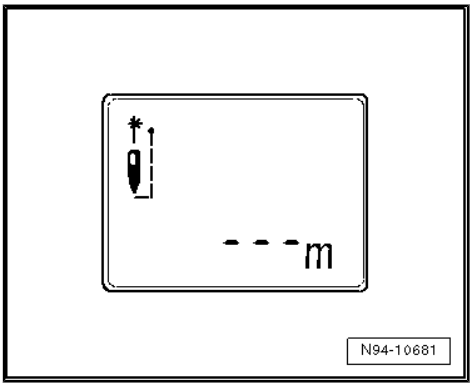

Protected by copyright. Copying for private or commercial purposes, in part or in whole, is not permitted unless authorised by AUDI AG. AUDI AG does not guarantee or accept any liability with respect to the correctness of information in this document. Copyright by AUDI AG.

– Hold spacing laser -VAS 6350/2- -2- flush with bracket on one side of calibration unit -VAS 6350/4- as shown in illustration. Spacing laser -VAS 6350/2- must make firm contact with bracket.

– Make sure laser beam from spacing laser -VAS 6350/2- hits lower, larger part of paddle -1-.

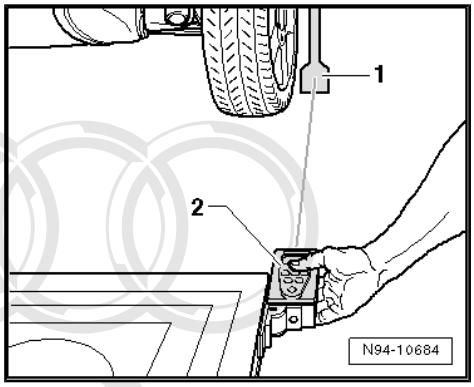

If this is not the case, position of paddles must be corrected accordingly using clamping bolts on wheel centre mounting -VAS 6350/1- .

– Hold spacing laser -VAS 6350/2- in locating bracket on calibration unit -VAS 6350/4- with one hand while laser beam is visible on paddle.

– Briefly operate the ON button to measure distance.

Display readout

– Make a note of the displayed value.

– Perform same measuring procedure for rear wheel on other side of calibration unit -VAS 6350/4- .

Protected by copyright. Copying for private or commercial purposes, in part or in whole, is not permitted unless authorised by AUDI AG. AUDI AG does not guarantee or accept any liability with respect to the correctness of information in this document. Copyright by AUDI AG

Measured distance value must be identical on both sides.

If values are not identical:

– Adjust calibration unit -VAS 6350/4- until values on both sides are identical.

When adjusting calibration unit -VAS 6350/4- , make sure that linear laser -VAS 6350/3- on calibration unit -VAS 6350/4- still hits centre of Audi rings and spirit level display also remains in the centre. If necessary, readjust.

– Measure height of calibration unit -VAS 6350/4- : dimension -H- (top edge of platform - floor).

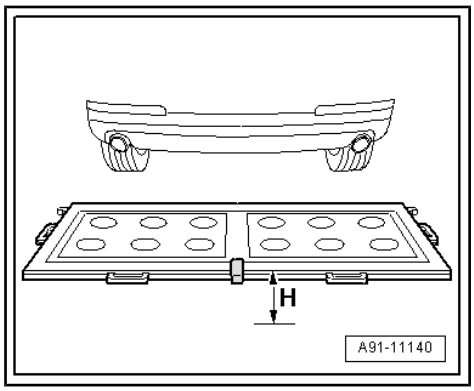

Now enter measured distance value and height in vehicle diagnostic, testing and information system -VAS 5051B- in “millimetres”.

Performing calibration

Select “Guided Functions” in vehicle diagnostic, testing and information system -VAS 5051B- .

– In “Vehicle selection” menu, select the relevant data for the vehicle.

– Select “Reversing camera system”.

– Select “Functions”.

– Select “Calibration”.

Further assistance is given by vehicle diagnostic, testing and information system -VAS 5051B- when continuing with calibration procedure.

WARNING

Make sure no light is reflected on calibration unit -VAS 6350/4- .

Reflected light impairs the view of the reversing camera -R189- and therefore it may be impossible to perform calibration.