Workshop Manual

Audi A8 2003 ➤

6-cylinder direct petrol injection engine (3.2 ltr. 4-valve)									
Engine ID	BPK	BKH							

Edition 01.2014

List of Workshop Manual Repair GroupsList of Workshop Manual Repair GroupsList of Workshop Manual Repair Groups

Repair Group

Technical information should always be available to the foremen and mechanics, because their careful and constant adherence to the instructions is essential to ensure vehicle road-worthiness and safety. In addition, the normal basic safety precautions for working on motor vehicles must, as a matter of course, be observed.

A0051115920

Contents

00 – Technical data

1 Engine number

(ARL003668; Edition 01.2014)

Engine number

– Pull off engine cover panel (front) -arrows-.

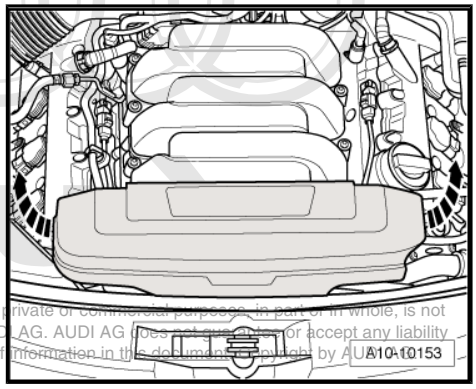

- The engine number (“engine code” and “serial number”) can be found on the front of the cylinder block beneath the cylinder head (right-side) -arrow 1-.
- Additionally there is a sticker on the coolant pipe (front) -arrow 2- showing the “engine code” and “serial number”.
- The engine code is also included on the vehicle data sticker.

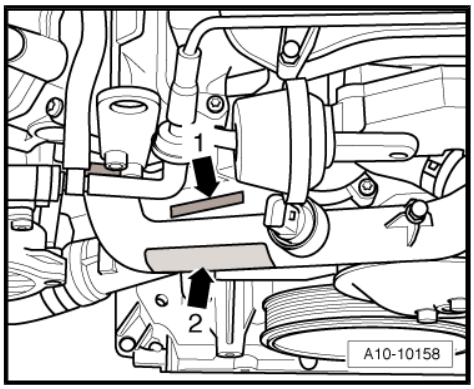

2 Engine data

Code letters		BKH	BPK
Capacity	ltr.	3.123	3.123
Power output	kW at rpm	188/6500	191/6500
Torque	Nm at rpm	330/3250	330/3250
Bore	∅ in mm	84.5	84.5
Stroke	mm	92.8	92.8
Compression ratio		12.5	12.5
RON	at least	95 1)	95 1)
Injection/ignition system		Simos	Simos
Firing order		1-4-3-6-2-5	1-4-3-6-2-5
Exhaust gas recirculation		no	no
Turbocharging/supercharging		no	no
Knock control		yes	yes
Variable valve timing		yes	yes
Intake manifold change-over		no	no
Secondary air system		no	no
Valves per cylinder		4	4

- 1) Unleaded regular grade petrol (RON 91) can also be used, but this will result in a loss of power

3 Safety precautions

3.1 Safety precautions when working on the fuel supply system

Please note the following warnings when working on the fuel supply system:

WARNING

The fuel system operates at extremely high pressure. This can cause injury.

- *The fuel pressure in the high-pressure section of the injection system must be reduced to a residual pressure prior to opening the system. Procedure ⇒ page 261*
- *Wrap a clean cloth around the connection and carefully loosen the connection to allow the residual pressure to dissipate.*

Escaping fuel can cause a risk.

- *The power supply for the fuel system pressurisation pump - G6- must be disconnected before opening the fuel system, since -G6- will be activated briefly when the driver's door is opened with the battery still connected.*
- *Disconnect power supply by removing fuse for fuel pump control unit - J538- /fuel delivery unit ⇒ Current flow diagrams, Electrical fault finding and Fitting locations, or disconnect battery.*

Observe the following to prevent injuries to persons and damage to the injection and ignition system:

- Always switch off the ignition before connecting or disconnecting electrical wiring for the injection or ignition system or tester cables.
- Always switch off ignition before washing engine.
- Erase any entries in event memory resulting from testing or installation ⇒ Vehicle diagnostic tester, `Interrogate event memory`, then `Generate readiness code`.

Caution

To prevent irreparable damage to the electronic components when disconnecting the battery:

- *Observe notes on procedure for disconnecting the battery.*
- *Always switch off the ignition before disconnecting the battery ⇒ Electrical system; Rep. gr. 27 .*

3.2 Safety precautions when using testers and measuring instruments during a road test

Note the following if testers and measuring instruments have to be used during a road test:

WARNING

Accidents can be caused if the driver is distracted by test equipment while road-testing, or if test equipment is not properly secured.

Persons sitting in the front passenger's seat could be injured if the airbag is triggered in an accident.

- *The use of test equipment while driving causes distraction.*
- *There is an increased risk of injury if test equipment is not secured.*

◆ *Test equipment must always be secured on the rear seat with a strap and operated from the rear seat by a second person.*

3.3 Safety precautions when working on the cooling system

When working on the cooling system note the following warnings:

WARNING

Hot steam/hot coolant can escape - risk of scalding.

◆ *The cooling system is under pressure when the engine is hot.*

◆ *To allow pressure to dissipate, cover filler cap on coolant expansion tank with cloth and open carefully.*

Risk of injury as the radiator fans may start up automatically.

◆ *Unplug electrical connectors before starting to work in the area of radiator cowl.*

Caution

Overheating can occur if the filler cap is not fitted properly.

◆ *The filler cap must engage positively and audibly when it is closed.*

3.4 Safety precautions when working on the ignition system

To prevent injuries to persons and/or irreparable damage to the fuel injection and ignition system, the following must be noted:

◆ Persons wearing a cardiac pacemaker must at all times maintain a safe distance from high-voltage components such as the ignition system and xenon headlights.

- Always switch off the ignition before connecting or disconnecting electrical wiring for the injection or ignition system or tester cables.
- Erase any entries in event memory resulting from testing or installation ⇒ Vehicle diagnostic tester, `Interrogate event memory`, then `Generate readiness code`.
- Always switch off the ignition before cleaning the engine.
- Always switch off the ignition before connecting or disconnecting the battery, otherwise the engine control unit may be damaged.

- If you want to turn over the engine at cranking speed without actually starting it (e.g. compression test), first unplug the connectors from the ignition coils. In addition, remove fuse for fuel pump control unit - J538- ; for identification of fuses refer to ⇒ Current flow diagrams, Electrical fault finding and Fitting locations.

Caution

To prevent irreparable damage to the electronic components when disconnecting the battery:

- *Observe notes on procedure for disconnecting the battery.*
- *Always switch off the ignition before disconnecting the battery ⇒ Electrical system; Rep. gr. 27 .*

4 Repair instructions

4.1 Rules for cleanliness

Even small amounts of dirt can cause malfunctions. For this reason, please observe the following rules when working on the fuel supply system and injection system:

- Carefully clean connection points and the surrounding area with engine cleaner or brake cleaner and dry thoroughly before opening.
- Immediately seal open lines and connections with clean plugs, for example from engine bung set - VAS 6122- .
- Place parts that have been removed on a clean surface and cover them over. Use only lint-free cloths.
- Carefully cover or seal open components if repairs cannot be carried out immediately.
- Only install clean components; replacement parts should only be unpacked immediately prior to installation. Do not use parts that have not been stored in their packing (e.g. in tool boxes etc.).
- When the system is open, do not work with compressed air and do not move the vehicle.
- Make sure that no fuel runs onto the fuel hoses. Should this occur, the fuel hoses must be cleaned again immediately.
- Protect unplugged electrical connectors against dirt and moisture and make sure connections are dry when attaching.

4.2 Foreign particles in engine

- When performing assembly work on the engine, all open passages in the intake and exhaust systems must be sealed with suitable plugs (e.g. from engine bung set - VAS 6122-) to prevent foreign particles from entering the engine.
- In the event of mechanical damage to one of the cylinder banks, the intake and exhaust systems and combustion chambers of the opposite cylinder bank must always be examined for foreign particles to prevent further damage occurring later.

4.3 Contact corrosion

Contact corrosion can occur if unsuitable fasteners are used (e.g. bolts, nuts, washers, etc.).

For this reason, only fasteners with a special surface coating are used.

Additionally, all rubber and plastic parts and all adhesives are made of non-conductive materials.

Always install new parts if you are not sure whether used parts can be re-fitted ⇒ Electronic parts catalogue .

Note the following:

- We recommend using only genuine replacement parts; these have been tested and are compatible with aluminium.
- We recommend the use of Audi accessories.
- Damage caused by contact corrosion is not covered under warranty.

4.4 Routing and attachment of pipes, hoses and wiring

- Mark fuel lines, vacuum lines, pipes/hoses for activated charcoal filter system and electrical wiring etc. before removal so they can be re-installed in the original positions and correctly connected. Make sketches or take photographs if necessary.
- To prevent damaging pipes, hoses and wiring, ensure sufficient clearance from all moving or hot components in engine compartment (little space in engine compartment).

4.5 Installing radiators and condensers

Even when the radiator, condenser and charge air cooler are correctly installed, slight impressions may be visible on the fins of these components. This does not mean that the components are damaged. If the fins are only very slightly distorted, this does not justify renewal of the radiator, condenser or charge air cooler.

4.6 Checking vacuum system

Special tools and workshop equipment required

- Hand vacuum pump - VAS 6213-

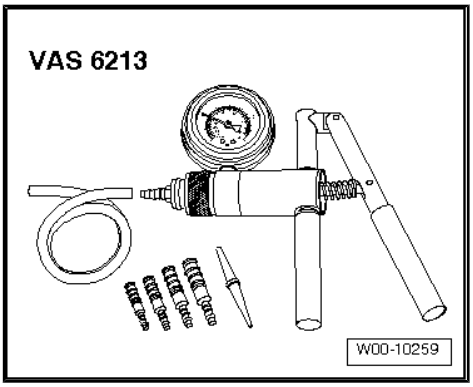

Procedure

– Check all vacuum lines in the complete vacuum system for:
- Cracks
- Traces of animal bites
- Kinked or crushed lines
- Lines porous or leaking

– Check vacuum line to solenoid valve and from solenoid valve to corresponding component.

– If a fault is stored in the event memory, check the vacuum lines leading to the corresponding component and also check the remaining vacuum lines in the system.

– If it is not possible to build up pressure with the hand vacuum pump - VAS 6213- or if the pressure drops again immediately, check the hand vacuum pump and connecting hoses for leaks.

10 – Removing and installing engine

1 Removing and installing engine - vehicles with multitronic gearbox

⇒ “1.1 Removing engine”, page 8

⇒ “1.2 Detaching multitronic gearbox from engine”, page 26

⇒ “1.3 Installing engine”, page 32

1.1 Removing engine

Special tools and workshop equipment required

- Removal lever - 80 - 200-
- Hose clamps, up to 25 mm - 3094-
- Stepladder - VAS 5085-
- Engine bung set - VAS 6122-
- Scissor-type assembly platform - VAS 6131 A- with support set for Audi - VAS 6131/10- and supplementary set -VAS 6131/11-
- Drip tray for workshop hoist - VAS 6208-

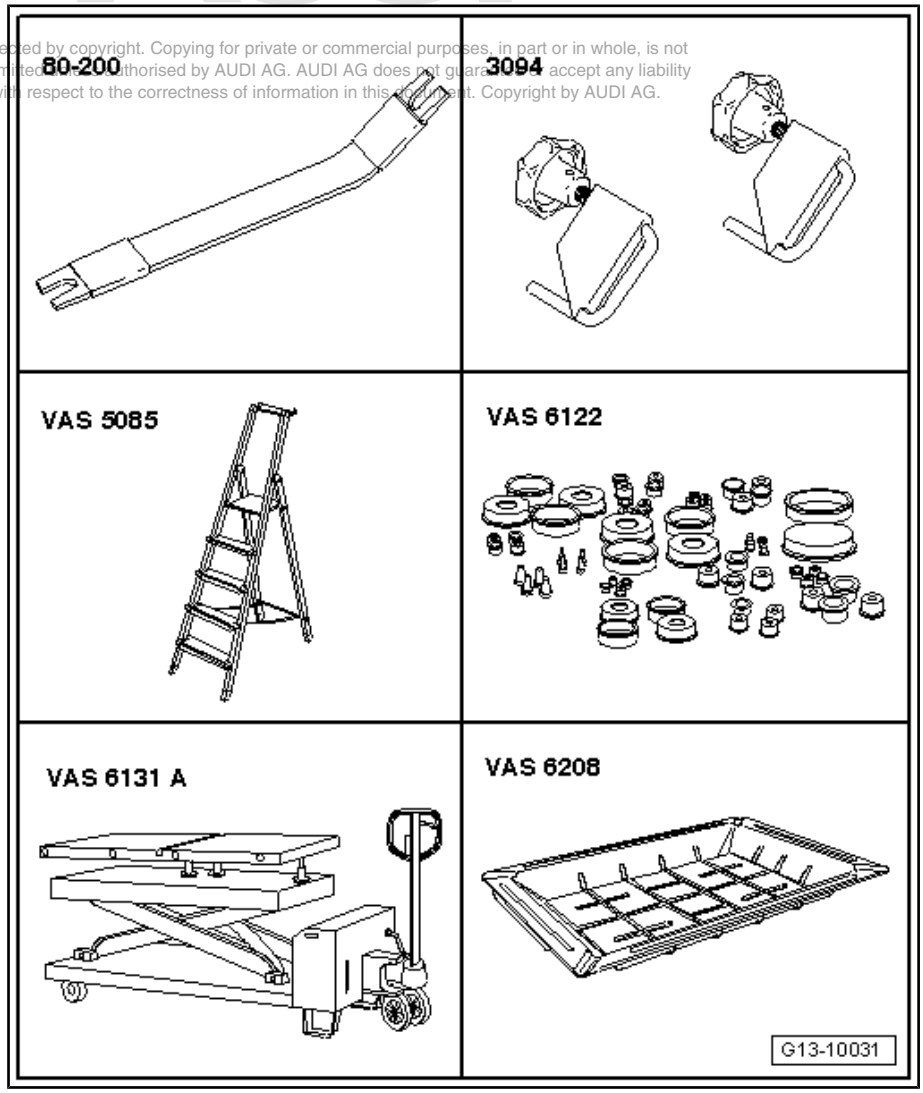

- Eye-head bolt - 3368-

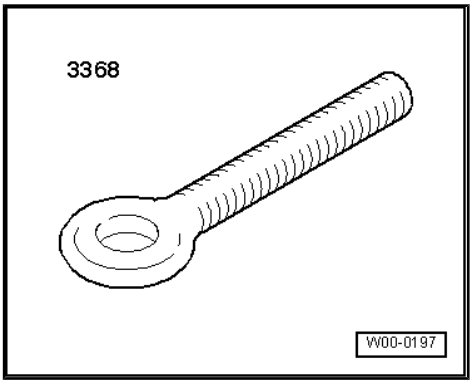

- Spark plug connector pliers - V.A.G 1922-

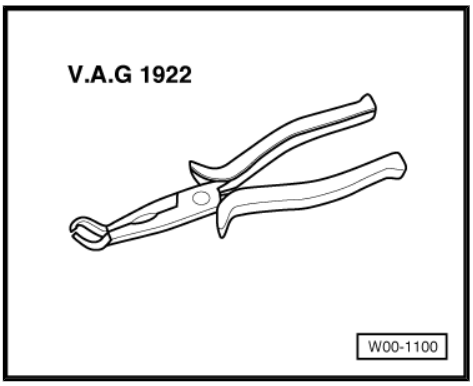

- Hose clip pliers - VAS 6362-

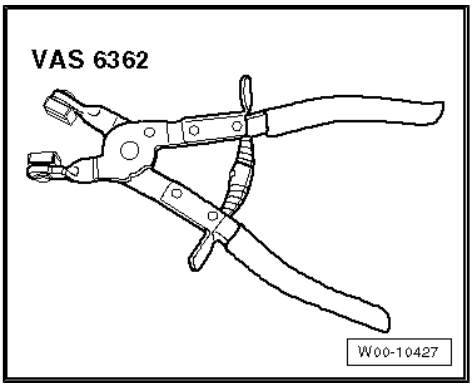

- Tensioning strap - T10038-

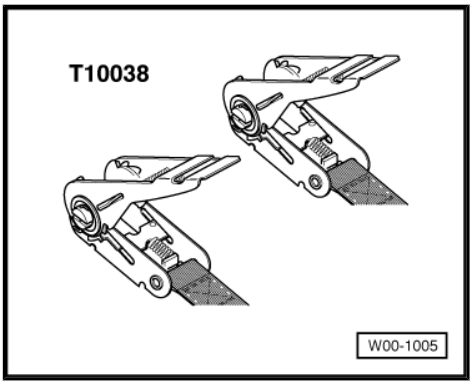

Note

If the engine is going to be separated from the gearbox (after the entire assembly is removed), you will additionally need supplementary set - VAS 6131/12- .

Procedure

Note

- *The engine is removed from underneath together with the gearbox and subframe (with lock carrier installed).*
- *All cable ties which are released or cut open when removing must be fitted in the same position when installing.*
- *Seal off open lines and connections with clean plugs from engine bung set - VAS 6122- .*

WARNING

Make sure the vehicle cannot tip over when the engine is removed.

- ***Secure the vehicle, to do so, the luggage compartment must be empty.***

The fuel system operates at extremely high pressure. This can cause injury.

- ***The fuel pressure in the high-pressure section of the injection system must be reduced to a residual pressure prior to opening the system.***

– Reduce fuel pressure in high-pressure section of injection system ⇒ page 261 .

Caution

Electronic components are susceptible to damage.

- ***Observe notes on procedure for disconnecting the battery.***

Note

To make sure you can still move the front wheels when the battery has been disconnected, only disconnect the battery with the ignition key inserted.

– Remove luggage compartment side trim cover (right-side) -arrows-.

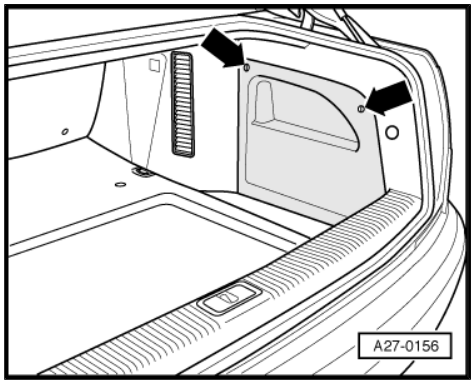

– Remove cover -1- over battery.

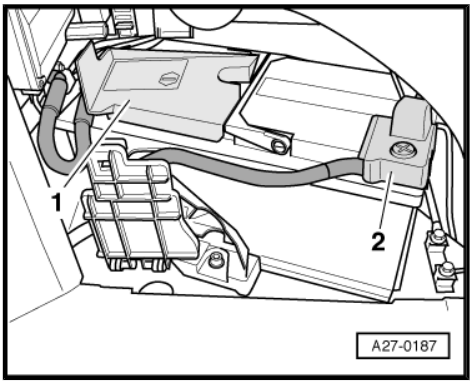

Note

Disregard -item 2-.

– Disconnect earth cable -arrow- at battery.

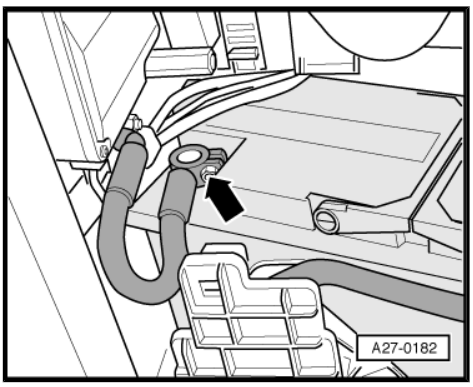

– Pull off engine cover panel (rear) -arrows-.

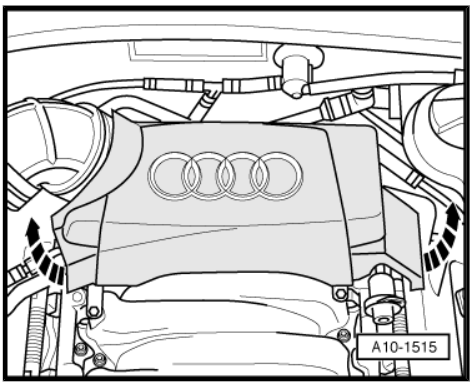

– Pull off engine cover panel (front) -arrows-.

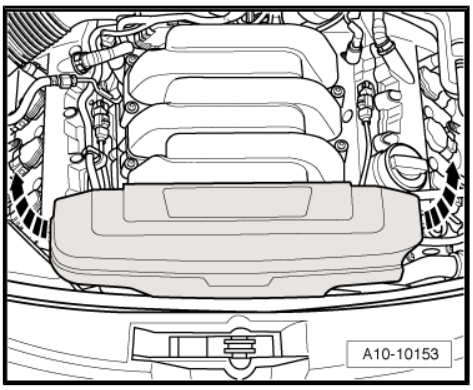

WARNING

Hot steam or hot coolant can escape when coolant expansion tank is opened; cover filler cap with cloth and open carefully.

– Open filler cap on coolant expansion tank.

– Remove engine compartment seal from lock carrier and wing panel flanges.

Note

Before removing, mark direction of rotation of poly V-belt with chalk or felt-tip pen. If the belt runs in the opposite direction when it is refitted, this can cause breakage.

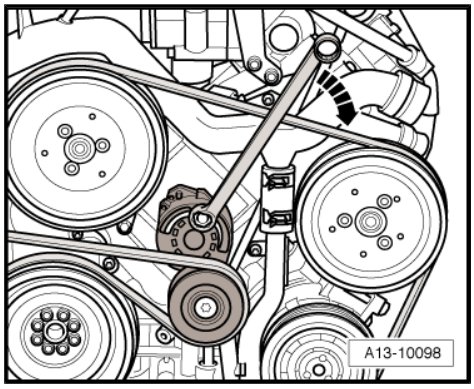

– Turn the tensioner in the direction of the -arrow- to slacken the poly V-belt.

– Remove poly V-belt and release pressure from the tensioner.

– Remove both front wheels.

Note

Secure brake discs with wheel bolts.

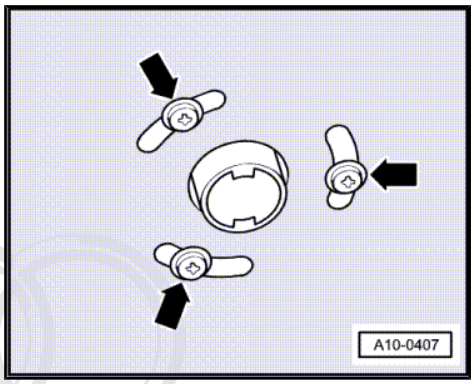

– If fitted, remove bolts -arrows- securing exhaust pipe for auxiliary/additional heater to noise insulation.

– Release quick-release fasteners -1- and -2- and take off noise insulation.

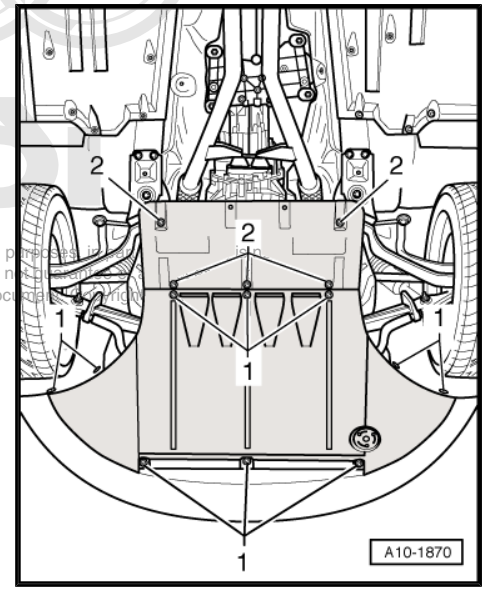

– Unbolt bracket for noise insulation -arrows-.

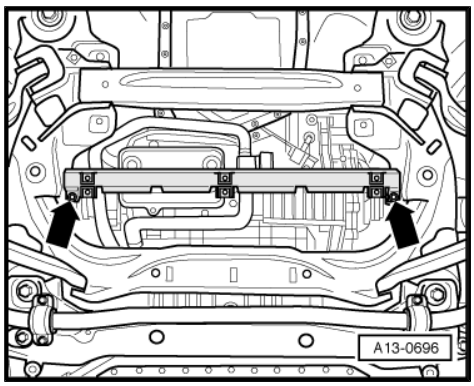

– Unbolt cross piece at lock carrier -arrows-.

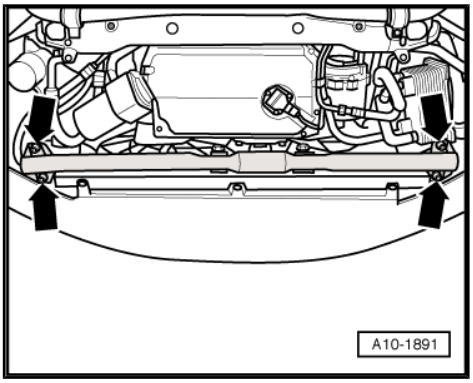

– Unscrew bolts -arrows- and remove cross piece from stop for torque reaction support.

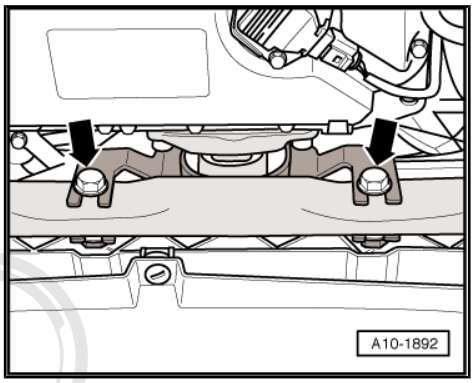

– Unscrew bolts -arrows- and remove torque reaction support from engine.

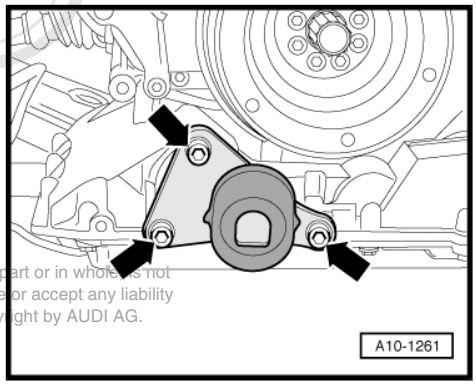

– Place drip tray for workshop hoist - VAS 6208- under engine.
– Disconnect coolant hose -arrow- at engine oil cooler and drain off remaining coolant.
– Then remove coolant hose.

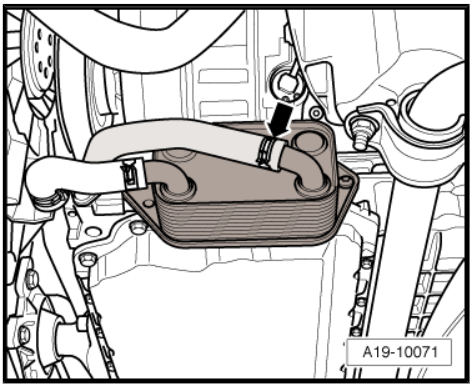

– Disconnect coolant hose -arrow- at thermostat before ATF cooler and drain off coolant.

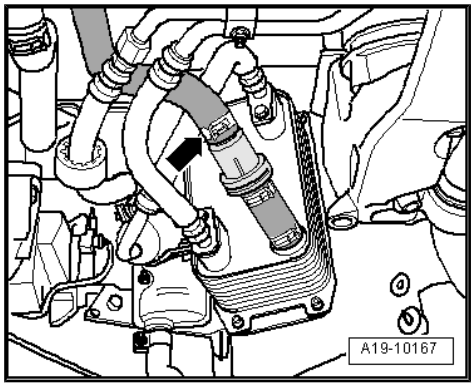

– Remove bolts -arrows-.
– Detach ATF cooler -1- and tie up to engine cross member.

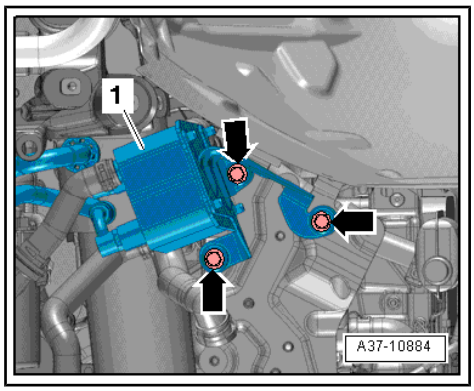

– Detach coolant hose -arrow- at bottom left of radiator.

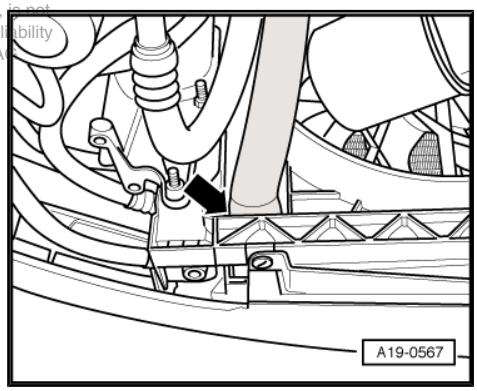

– Detach coolant hose (front right) -1- from coolant pipe.
– Unscrew bolts -2- and -3- for coolant pipe.

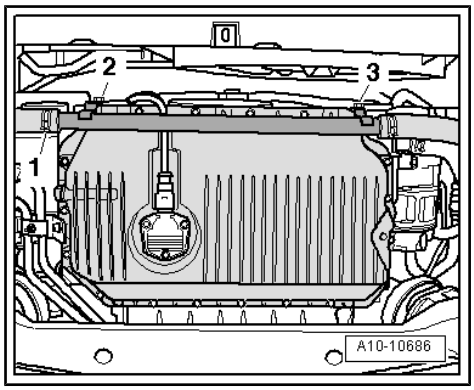

Note

The coolant pipe is removed together with the coolant hose (left-side) at a later stage.

– Detach coolant hose -1- from engine oil cooler.
– Unscrew bolts -arrows- and detach engine oil cooler.

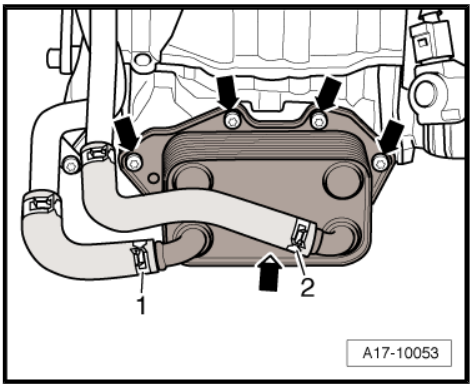

Note

- *Disregard -item 2-.*
- *Plug openings on sump with clean plugs.*

– Unplug electrical connector -1- for magnetic clutch on air conditioner compressor.

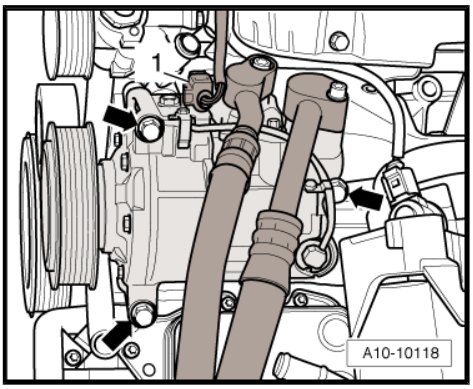

WARNING

The air conditioner refrigerant circuit must not be opened.

– Unscrew air conditioner compressor from bracket -arrows-.

Note

To prevent damage to the refrigerant lines, ensure that the pipes and hoses are not stretched, kinked or bent.

– Tie up air conditioner compressor with lines attached to left-side of vehicle.

Note

Lay a cloth under the hydraulic lines to catch any escaping hydraulic fluid.

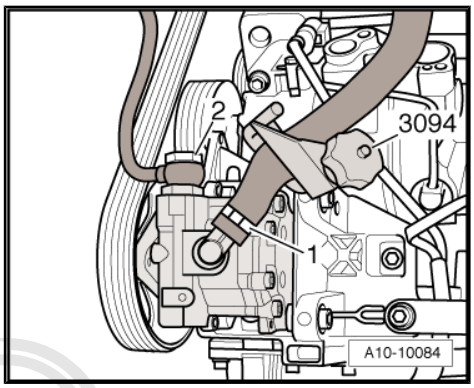

– Clamp off hydraulic hose -1- for power steering pump using a hose clamp - 3094- .
– Disconnect hydraulic hose from power steering pump.
– Unbolt hydraulic line -2- from power steering pump and place hydraulic line on top of longitudinal member.

– Detach coolant hose -arrow- from coolant pipe (front).

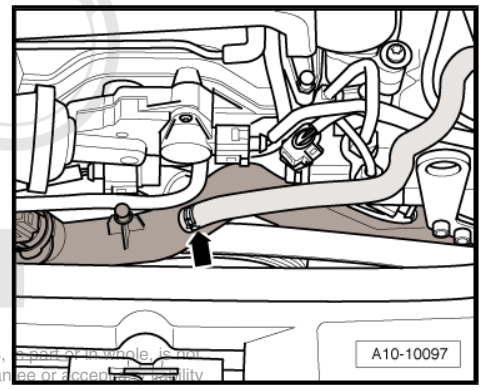

– Detach coolant hose (left-side) -arrows- from engine and move hose clear.
– Guide coolant hose downwards and detach together with coolant pipe (bottom front).

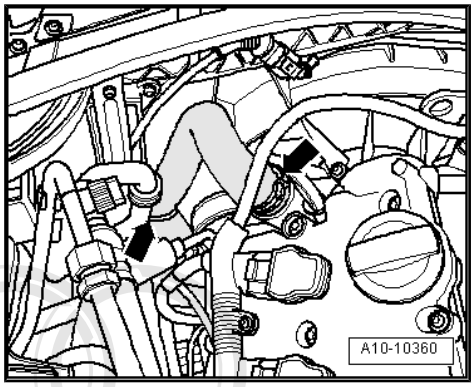

– Detach coolant hose -arrow- from coolant expansion tank.
– Move coolant hose at engine clear.

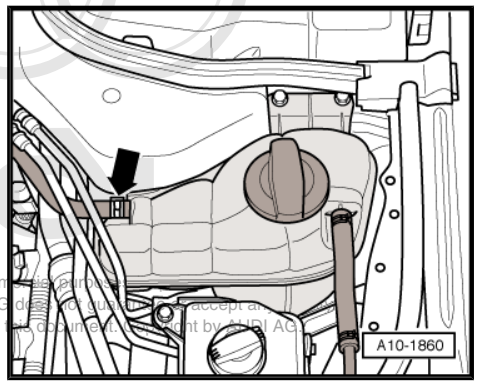

– Pull non-return valve -2- off connection at air intake hose.
– Unclip vacuum line -1- and fuel line -3- from retainer on air intake hose.
– Release hose clips -arrows- and remove air intake hose.

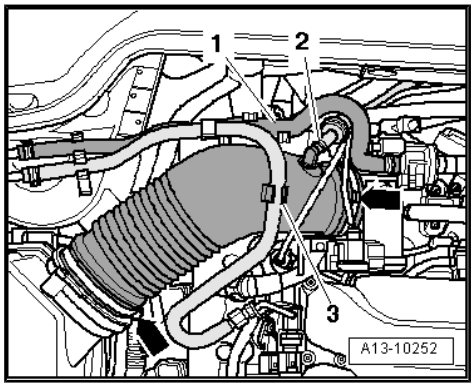

– Unplug electrical connector -1-.
– Detach vacuum hose -2-.
– Remove bolts -arrows-.
– Take out air cleaner housing.

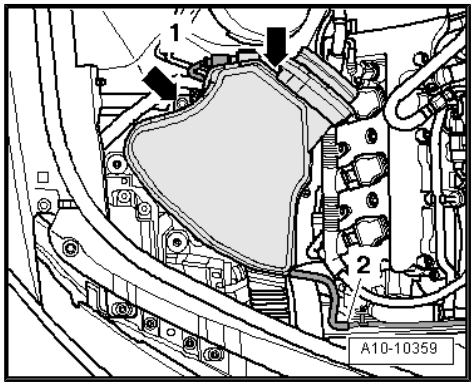

– Detach coolant hoses -1- and -2-.

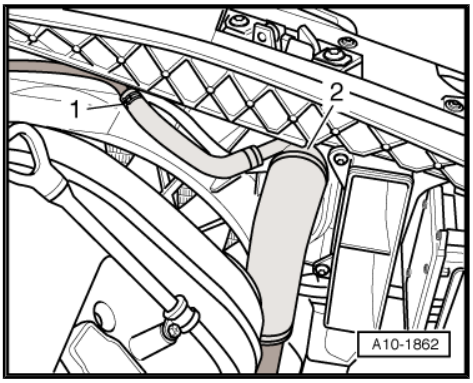

Note

The coolant hose (right-side) remains connected to the ATF cooler when the ATF cooler is moved clear.

Caution

Rules for cleanliness when working on the injection system ***⇒ page 6***.

WARNING

The fuel system is pressurised. Wrap a cloth around the connection before opening the system. Then release pressure by carefully loosening the connection.

– Disconnect fuel line -arrow- and move it clear.

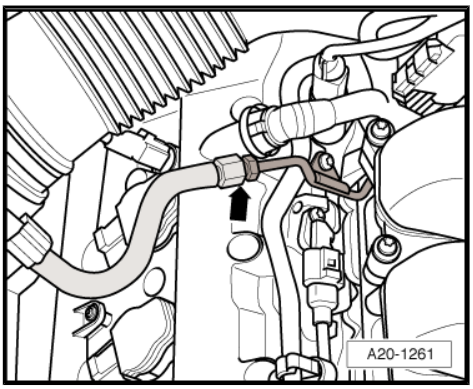

– Disconnect vacuum hose -arrow- leading to activated charcoal filter.

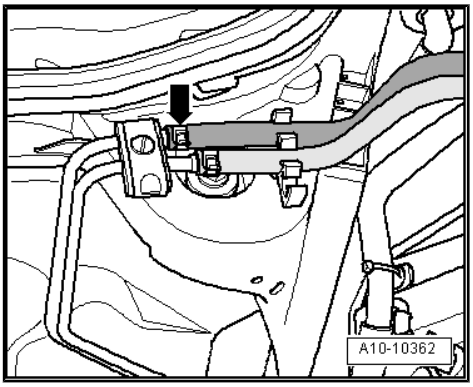

– Detach vacuum hose -arrow- going to brake servo at plenum chamber partition panel.

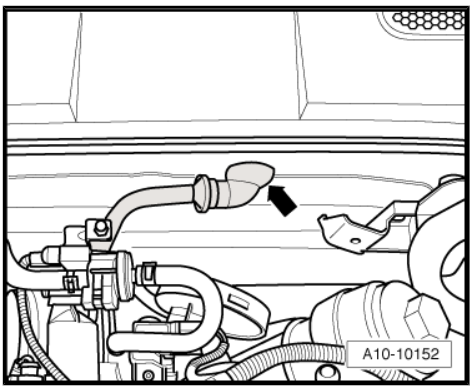

– Unscrew nuts and detach bracket for connectors -1 … 4- (centre) from plenum chamber partition panel.

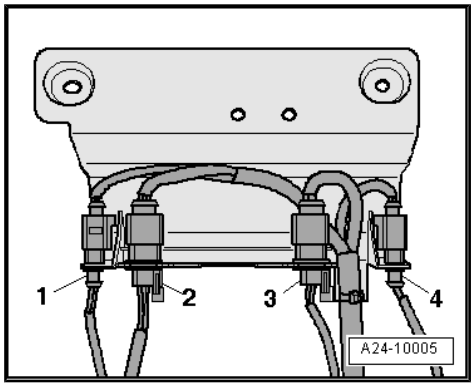

– Detach coolant hoses -arrows- leading to heat exchanger for heater at plenum chamber partition panel.

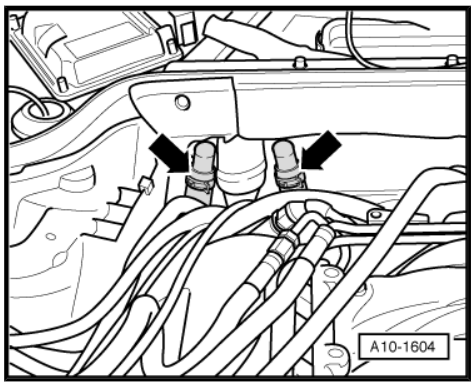

Vehicles with auxiliary heater:

– Detach coolant hose -arrow- at rear left of engine.

– Remove coolant hose.

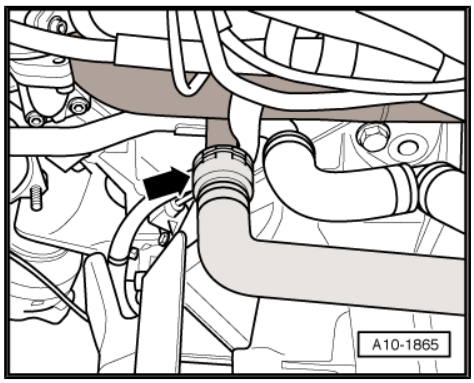

Note

Shown from rear with engine removed for illustration purposes.

All vehicles:

– Pull off rubber seal -1- on plenum chamber covers.

– Detach plenum chamber covers -2- and -3-.

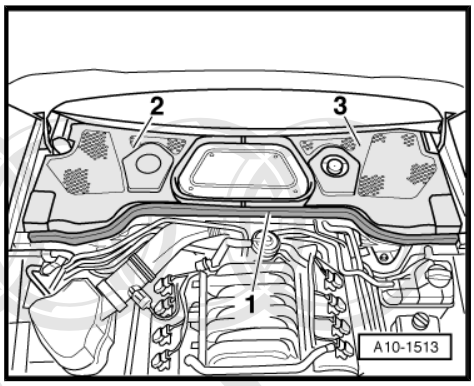

– Lever off caps on windscreen wiper arms with a screwdriver.
– Loosen hexagon nuts -arrows- several turns.
– Loosen wiper arms from wiper shafts by tilting slightly, remove hexagon nuts and take off wiper arms.
– Remove dust and pollen filter ⇒ Rep. gr. 87 .

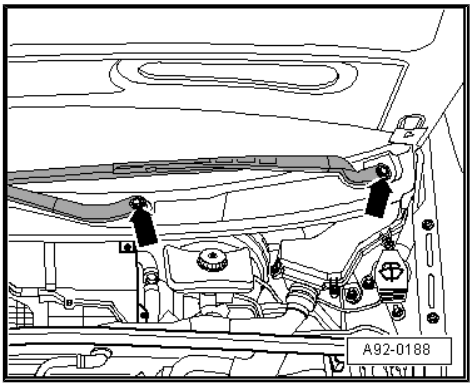

Note

Cover air duct at air conditioner housing with clean cloth to prevent anything falling in.

– Remove bolts -arrows- for cowl panel trim -1- on both sides.

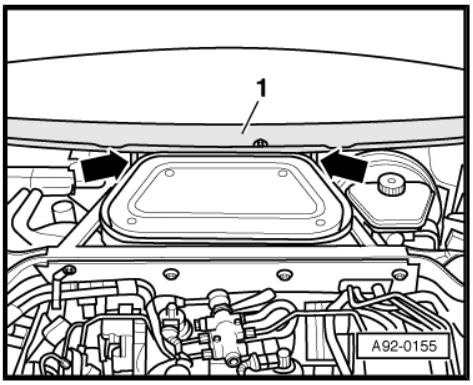

Caution

To avoid cracking the cowl panel trim -1- during removal, apply a small amount of soap solution to the joint between the windscreen and the cowl panel trim and pull the trim vertically up out of the windscreen surround, starting from the edge of the windscreen.

– Carefully pull cowl panel trim off retainer at windscreen.

– Unscrew body brace -arrow-.

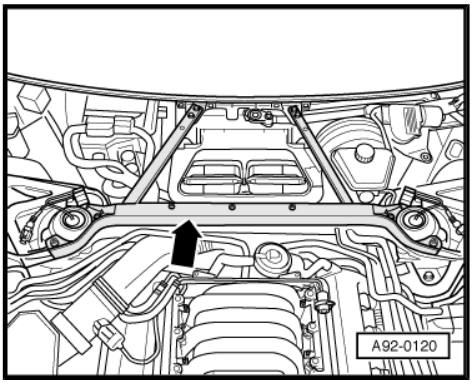

– Unclip cover for engine control unit.
– Remove bolts -arrows-.
– Detach retainer and engine control unit from electronics box (plenum chamber).

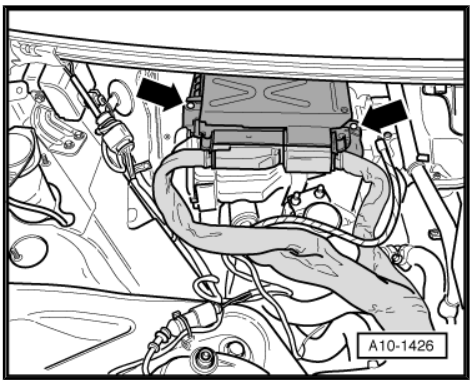

Note

The electrical wires remain connected.

– Turn air quality sensor - G238- 90° anti-clockwise -arrow- and remove from retainer.
– Release retaining clips -1 ... 4-.
– Open electronics box (plenum chamber) cover slightly and pull off to front.

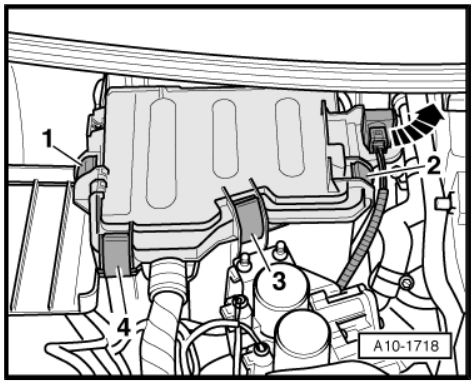

– Disconnect the electrical multi-pin connectors -1- using spark plug connector pliers - V.A.G 1922- .
– Detach engine wiring harness at electronics box and at bulkhead.
– Place engine control unit with wiring harness attached on top of engine.

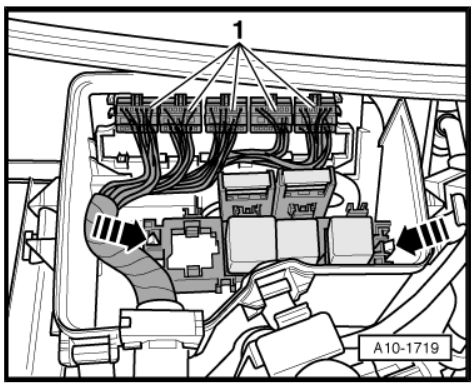

Note

Secure the engine control unit to prevent it falling.

– Remove A-pillar trim (right-side) ⇒ Rep. gr. 70 .
– Fold back floor covering.
– Unbolt protective cover above main fuse holder.
– Fold cover -2- to side.
– Remove nut -4-.
– Detach terminal 30 wire to starter.

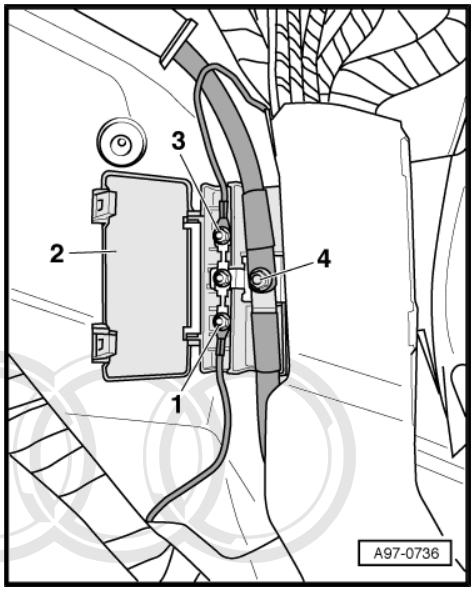

Note

Disregard items -1- and -3-.

– Remove front and rear sections of front right wheel housing liner ⇒ Rep. gr. 66 .
– Unscrew wiring clamp -1- in wheel housing (front right).
– Pull wiring harness out from interior -arrow-.

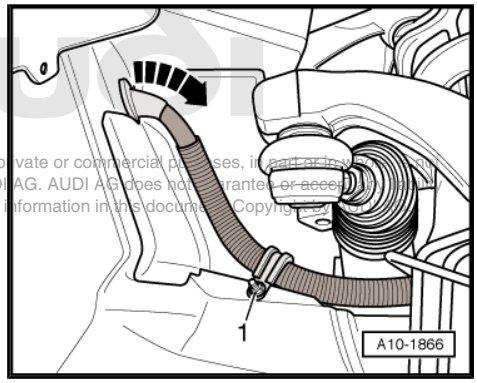

– Unplug electrical connectors -1- and -3-.
– Unbolt earth cable -2- at longitudinal member.
– Unscrew bracket for wiring harness at longitudinal member -arrows- and move wiring harness clear.

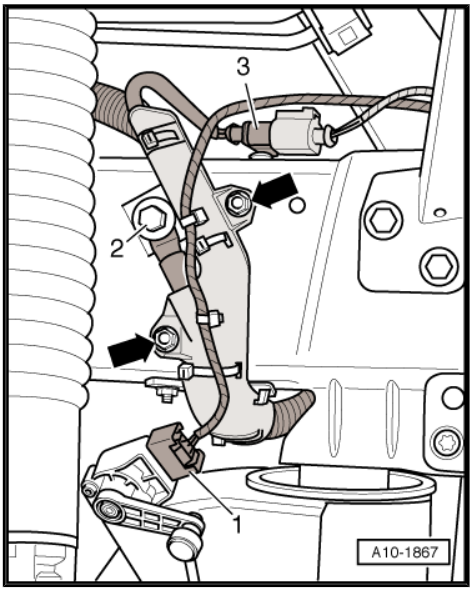

– Have a 2nd mechanic press the brake pedal.

> **Caution**
>
> *When slackening the flange bolt securing the drive shaft, the wheel bearing must not be under load (vehicle must not be standing on its wheels).*

– Unscrew flange bolt -2- from drive shaft -1- (left and right).

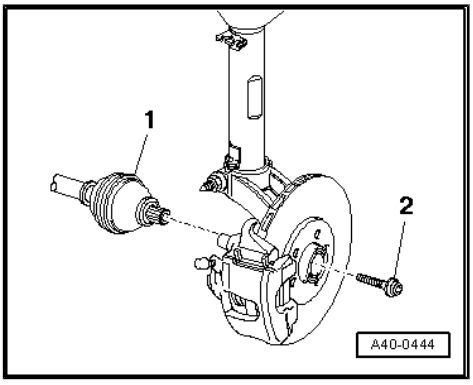

– Unscrew bolts (left and right) -arrows- evenly.
– Take out anti-roll bar.

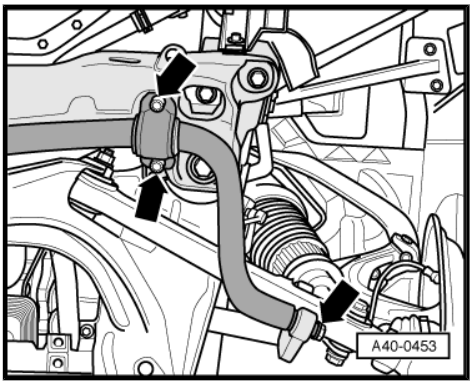

– Unplug electrical connector -2- at vehicle level sender.
– Detach coupling rod -1- at track control link.

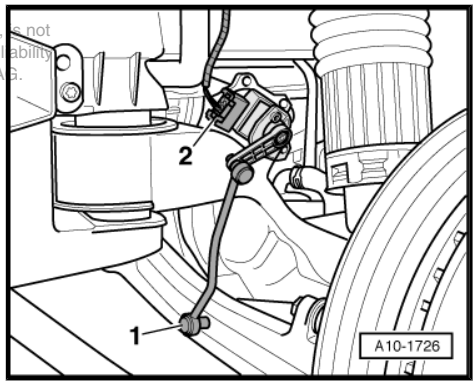

– Fit eye-head bolt - 3368- from below in bore on suspension turret on both sides.

– Secure eye-head bolts - 3368- with nut -2- and washer -1- (screw down nut several turns but not all the way down).

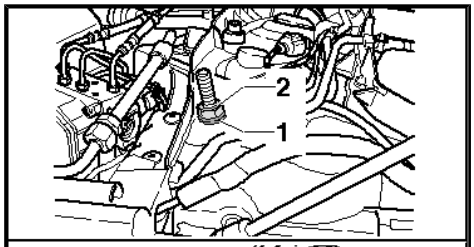

Caution

The weight of the wheel bearing housings must be supported in order to prevent damage to the joints of the upper links.

– Tie up wheel bearing housing on each side using tensioning strap - T10038- as illustrated.

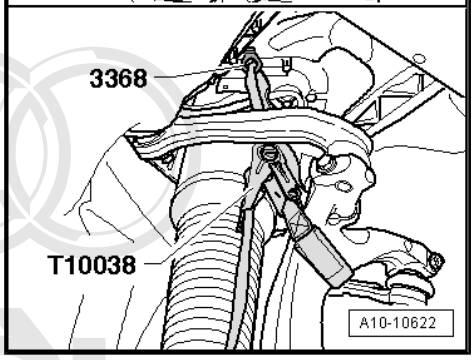

– Unplug electrical connector -2- for front wheel speed sensor.

– Move electrical wire -1- clear.

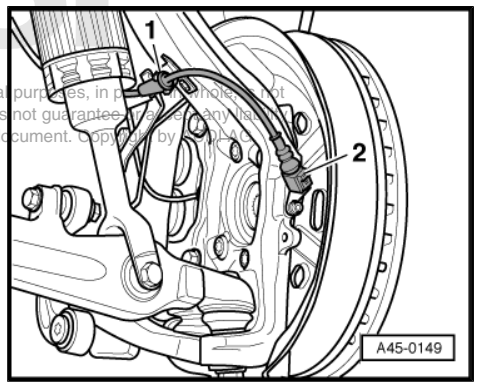

– Unbolt suspension strut from track control link -arrow-.

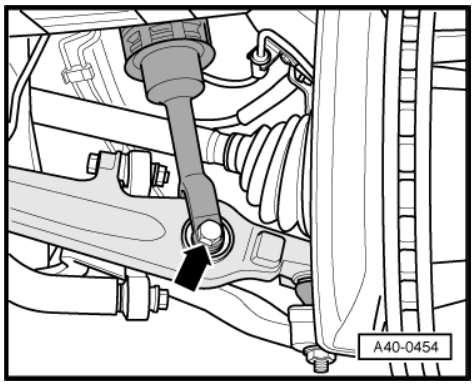

– Unbolt guide link -1- and track control link -2- at subframe.

Note

If necessary, detach rear section of wheel housing liner when pulling out guide link bolt -1-.

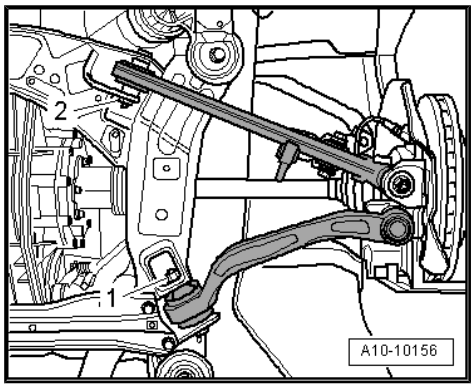

– Pivot guide link -1- and track control link -2- outwards.

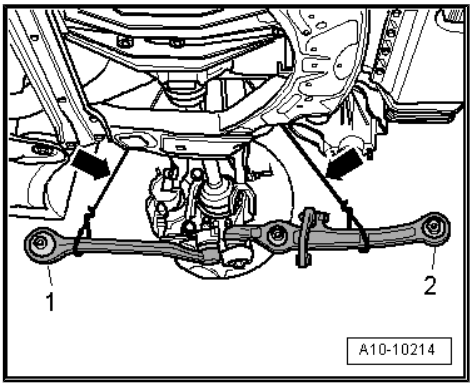

> **Caution**
>
> *The guide link and track control link must not be allowed to hang down without support. Tie up both the guide link and track control link to wheel bearing housing as illustrated -arrow-.*

– Repeat procedure on other side of vehicle.

– Remove noise insulation in left-side wheel housing -arrows-.

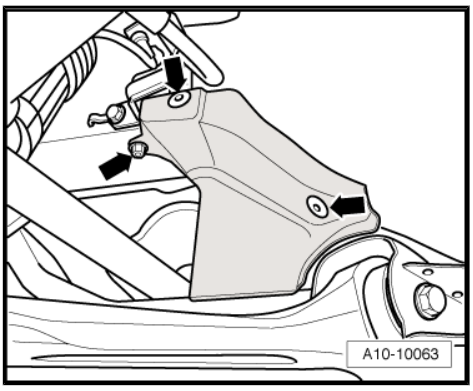

– Remove noise insulation in wheel housing (right-side) -arrows-.

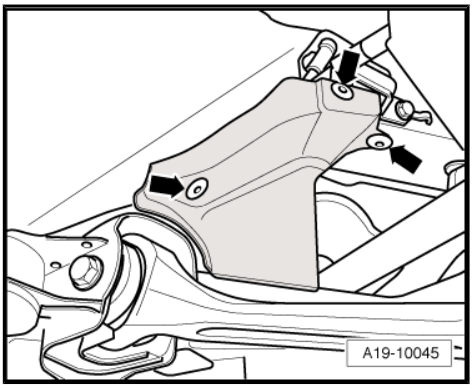

– Unbolt heat shield -1- for drive shaft.

– Unbolt drive shaft from flange shaft on gearbox.

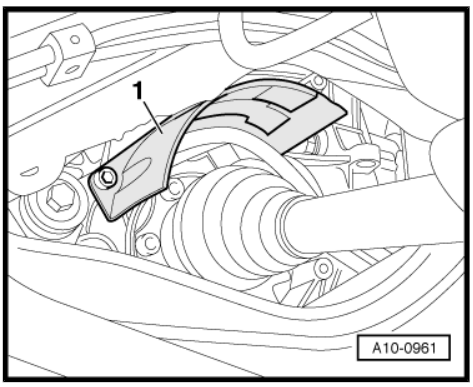

> **Caution**
>
> *Take care not to damage brake hose.*

– Pivot wheel bearing housing outwards and remove drive shaft.

– Repeat procedure on other side of vehicle.

– Unbolt cross piece (front) -arrows-.

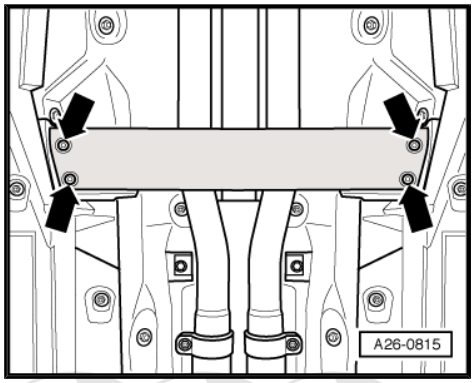

Disconnect exhaust system at clamps -1- (left-side) and -2- (right-side).

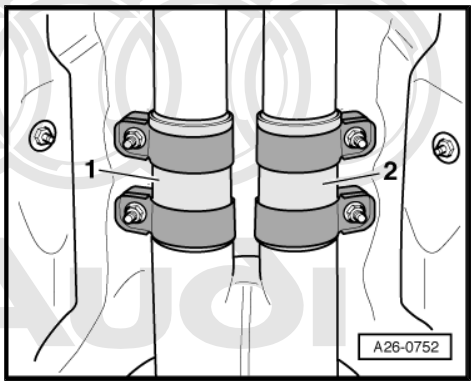

Set up the scissor-type assembly platform as follows:

– Set up scissor-type assembly platform - VAS 6131 A- with support set for Audi - VAS 6131/10- , supplementary set -VAS 6131/11- and -VAS 6131/13- as follows:

Platform coordinates	Parts of support set for Audi - VAS 6131/10- , supplementary set -VAS 6131/11- and supplementary set -VAS 6131/13-			
B4	/10-1	/10-4	/10-5	/10-11
G4	/10-1	/10-4	/10-5	/10-12
B7	/10-1	/10-2	/10-5	/10-7
G7	/10-1	/10-2	/10-5	/10-7
B10	/10-1	/10-2	/10-5	/10-8
G10	/10-1	/10-2	/10-5	/10-8
C12	/10-1	/10-3	/10-5	/10-6
F12	/10-1	/10-3	/10-5	/11-3
D17	/13-6			/13-2
E17	/13-6			/13-2

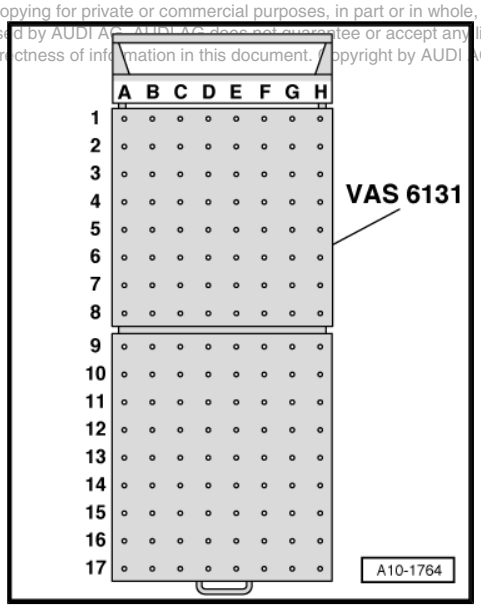

– Initially tighten the support elements on the assembly platform only hand-tight.

– Adjust the scissor-type assembly platform - VAS 6131 A- so that it is horizontal.

• Take note of spirit level (bubble gauge).

– Place scissor-type assembly platform - VAS 6131 A- under engine/gearbox assembly.

– Position support elements from -VAS 6131/10- at front of engine, as shown in illustration.
– Make sure that threaded spindles are screwed in completely.

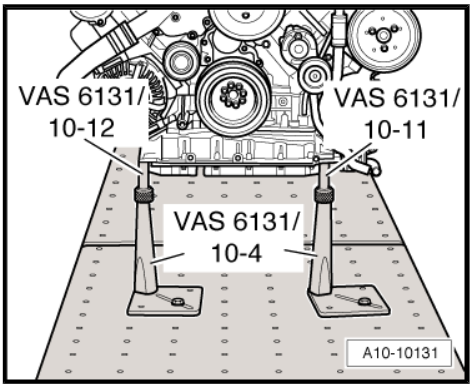

– Position support elements from -VAS 6131/10- at left and right of subframe, as shown in illustration.

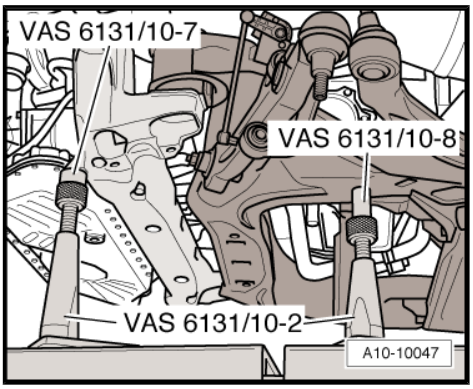

– Position support elements from -VAS 6131/10- and -VAS 6131/11- at rear of gearbox, as shown in illustration.
– Turn all spindles for the support elements upwards until all locating lugs make contact with the mounting points.

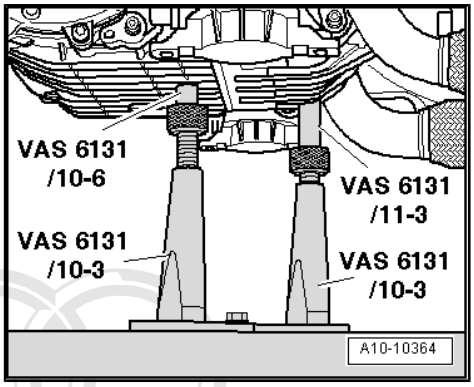

– Position support elements from -VAS 6131/13- underneath front silencer (left-side and right-side), as shown in illustration.
– Tighten base plates for support elements to 20 Nm on scissor-type assembly platform - VAS 6131 A- .

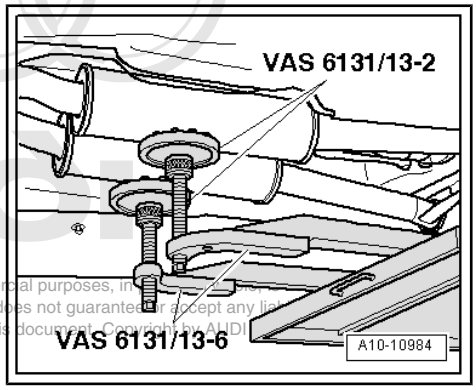

– Mark installation position of subframe and engine cross member on longitudinal members with felt-tip pen.
– Remove bolts -1- and -4-.
– Remove bolts -2- and -3- in a diagonal sequence and in stages.

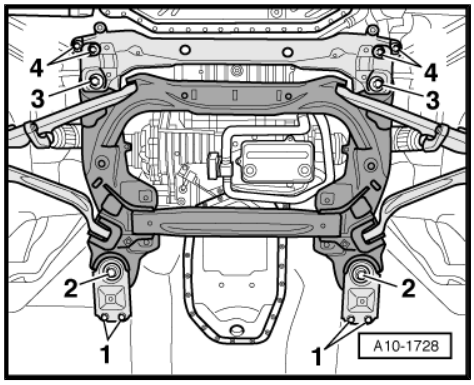

Note

♦ *Check that all hoses and wiring connections between engine, gearbox, subframe and body have been detached.*
♦ *Carefully guide out engine/gearbox assembly with subframe from engine compartment when lowering to avoid damage.*

– Lower the engine/gearbox assembly using scissor-type assembly platform - VAS 6131 A- initially only as far as distance -a-.
• Dimension -a- = 80 mm

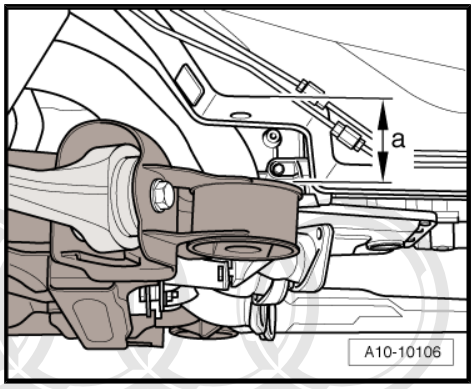

– Pry ball head -1- of selector lever cable off gearbox selector lever using removal lever - 80 - 200- -arrow-.
– Pull off securing clip -2- and remove selector lever cable from gearbox.

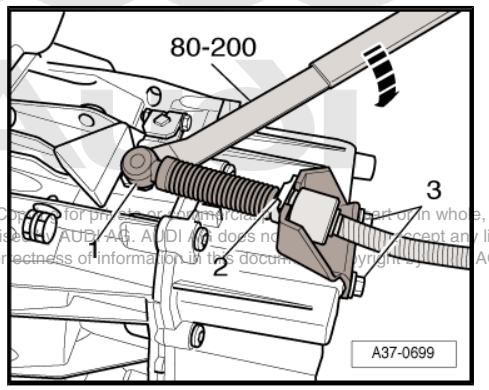

Note

♦ *Disregard -item 3-.*
♦ *Take care not to bend or kink selector lever cable.*

– Check that all hoses and wiring connections between engine, gearbox, subframe and body have been detached.
– Carefully guide out engine/gearbox assembly with subframe from engine compartment when lowering to avoid damage.
– Lower engine/gearbox assembly gradually.
– Pull out scissor-type assembly platform - VAS 6131 A- from under the vehicle.

1.2 Detaching multitronic gearbox from engine

Special tools and workshop equipment required

♦ Support set for Audi - VAS 6131/10- and supplementary set - VAS 6131/12-

Procedure

- Engine/gearbox assembly removed and secured to scissor-type assembly platform - VAS 6131 A- .

– Unplug electrical connector -1- at gearbox mounting (left-side).

– Remove bolts -arrows- for gearbox mountings.

– Repeat procedure on opposite side of vehicle.

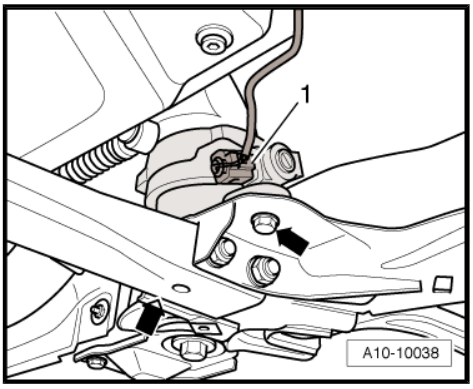

– Remove bolts -1- and detach bracket for noise insulation.

– Unscrew bolts -2- and remove cross member.

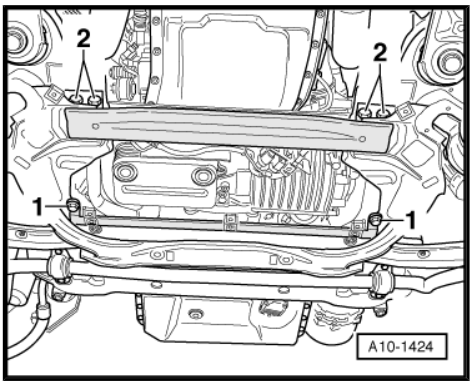

– Screw down spindles of support elements -2- (left and right) at subframe as far as possible.

– Remove locating lugs from spindles.

– Take out subframe -3- from the side.

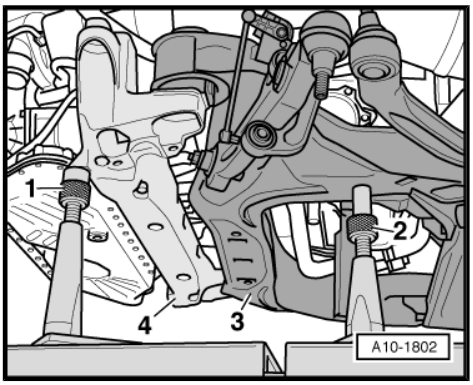

Note

A second mechanic is required for removing the subframe.

– Screw down spindles of support elements -1- (left and right) at engine cross member -4- as far as possible.

– Remove bolts -arrows- for engine mounting (left and right-side)

– Take out engine cross member.

– Unscrew the 4 base plates for support elements (for engine cross member and subframe) at assembly platform - VAS 6131 A- .

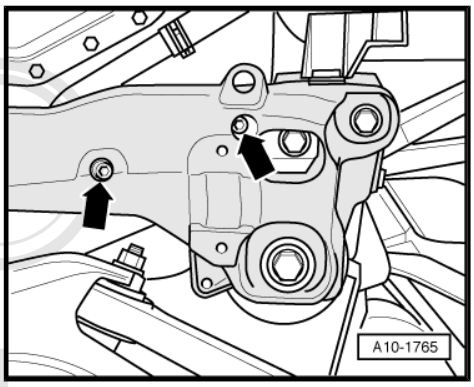

– Remove bracket -arrow- for ATF lines.

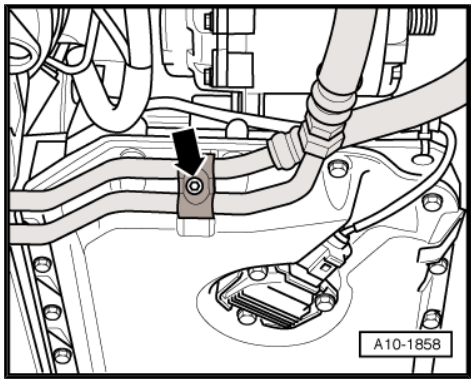

Note

Observe rules for cleanliness when working on automatic gearbox ⇒ Rep. gr. 00 .

– Unscrew bolt -arrow- and detach ATF lines from gearbox.

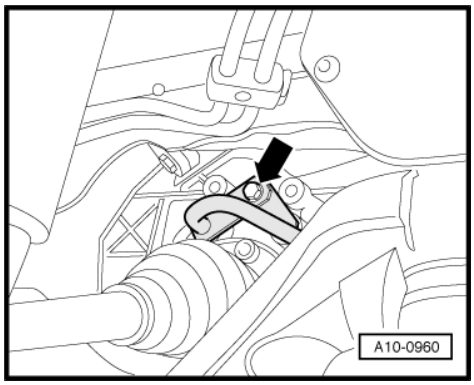

Note

The mounting points for engine (front) and gearbox (rear) remain unchanged.

– Set up scissor-type assembly platform - VAS 6131 A- with support set for Audi - VAS 6131/10- and support set -VAS 6131/12- as follows:

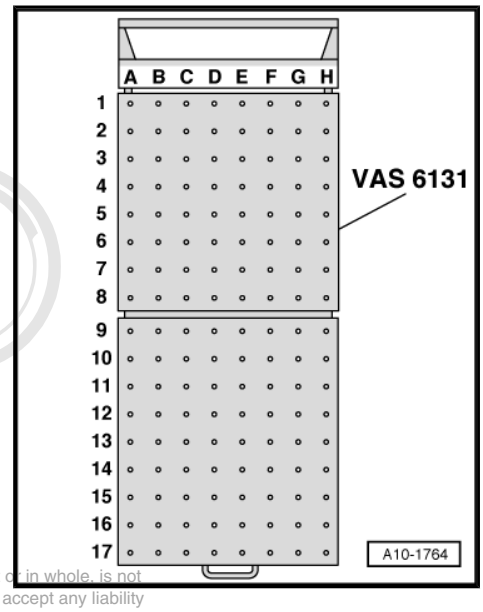

Platform coordinates	Parts of support set for Audi - VAS 6131/10- and supplementary set -VAS 6131/12-			
B4 1)	/10-1	/10-4	/10-5	/10-11
G4 1)	/10-1	/10-4	/10-5	/10-12
B7	/10-1	/10-4	/10-5	/10-11
G7	/10-1	/10-4	/10-5	/10-10
B10	/10-1	/10-4	/10-5	/12-1
G10	/10-1	/12-2	/10-5	/12-1
C12 1)	/10-1	/10-3	/10-5	/10-6
F12 1)	/10-1	/10-3	/10-5	/11-3
D17 1)	/13-6			/13-2
E17 1)	/13-6			/13-2

• 1) Support elements remain unchanged.

– Position support elements from -VAS 6131/10- and -VAS 6131/12- on left side of engine/gearbox assembly, as shown in illustration.

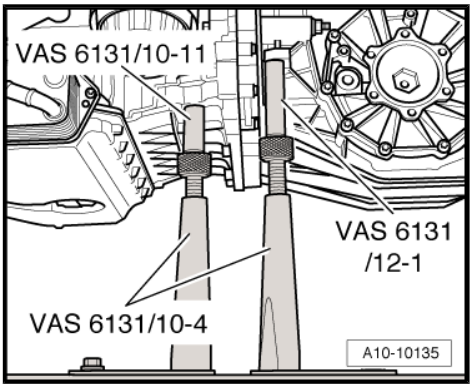

– Place support elements from -VAS 6131/10- and -VAS 6131/12- at right of engine/gearbox assembly, as shown in illustration.
– Turn spindles for the support elements upwards until all locating lugs make contact with the mounting points.
– Tighten base plates for support elements to 20 Nm on scissor-type assembly platform - VAS 6131 A- .

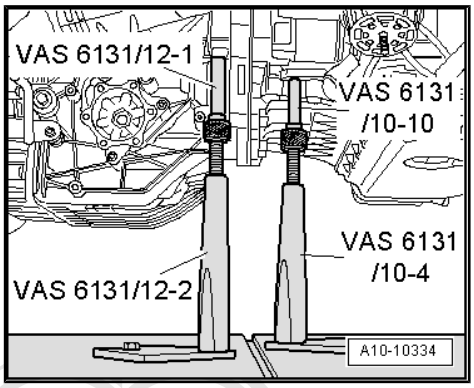

– Release electrical connector -1- and detach from gearbox.
– Move wiring harness going to engine clear -arrows-.

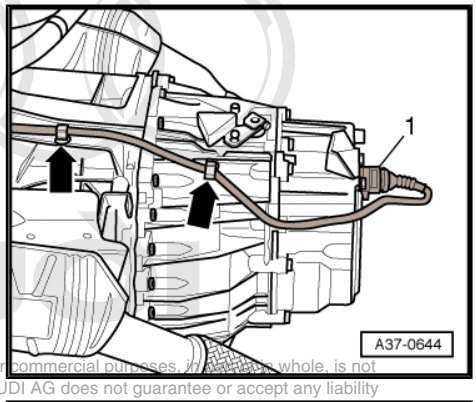

– Unplug electrical connector -arrow- leading to engine speed sender - G28- .

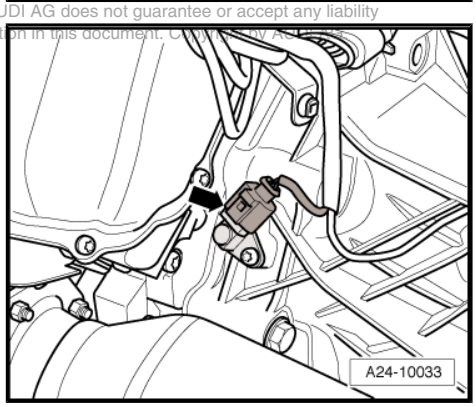

– Unplug electrical connector -4- for Lambda probe 2 after catalytic converter - G131- and move wiring clear.

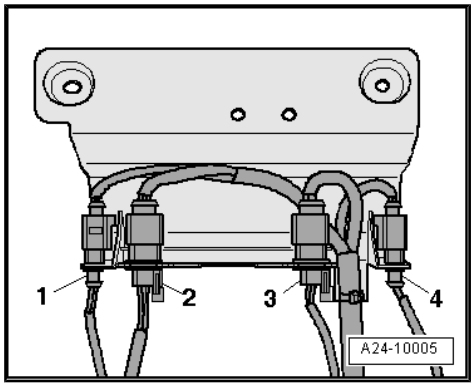

Note

To avoid any damage, the flexible joint in the front exhaust pipe must not be bent more than 10°.

– Unscrew nut -left arrow- at mounting bracket for front exhaust pipe (left-side).

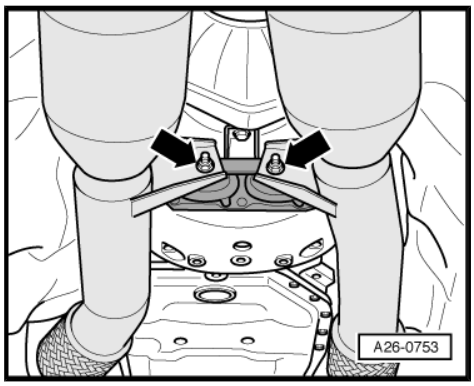

– Remove bolt -2- on bracket (left-side) for front exhaust pipe.

Note

Disregard -item 1-.

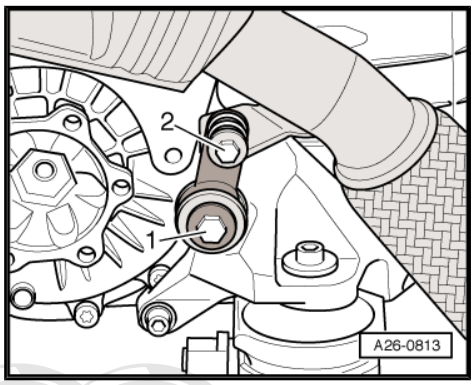

– Unscrew nuts -1 ... 3-.

– Detach front exhaust pipe (left-side) with catalytic converter.

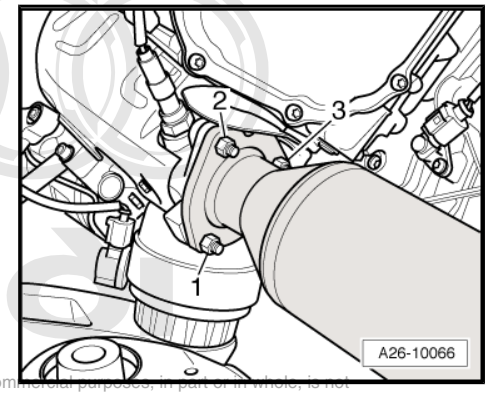

– Unplug electrical connector -1- for Lambda probe after catalytic converter - G130- and move wiring clear.

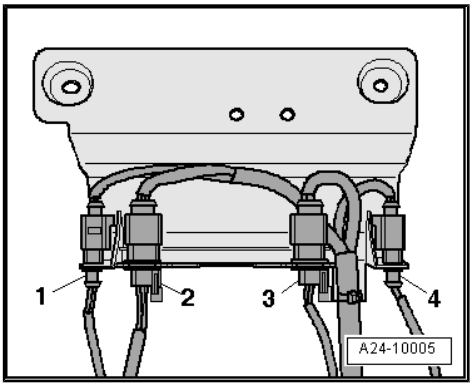

Note

To avoid any damage, the flexible joint in the front exhaust pipe must not be bent more than 10°.

– Unscrew nut -right arrow- at mounting bracket for front exhaust pipe (right-side).

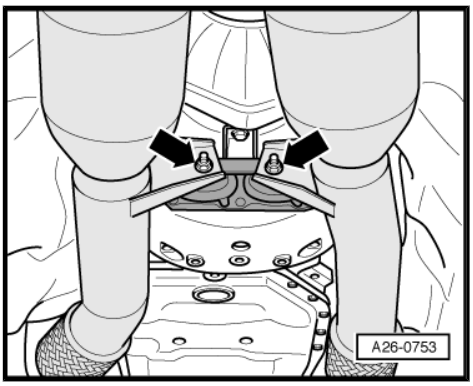

– Remove bolt -1- on bracket (right-side) for front exhaust pipe.

Note

Disregard -item 2-.

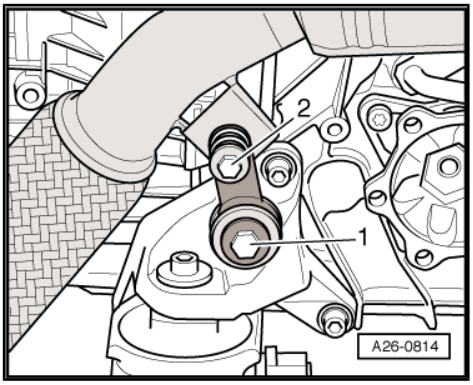

– Unscrew nuts -1 ... 3-.

– Detach front exhaust pipe (right-side) with catalytic converter.

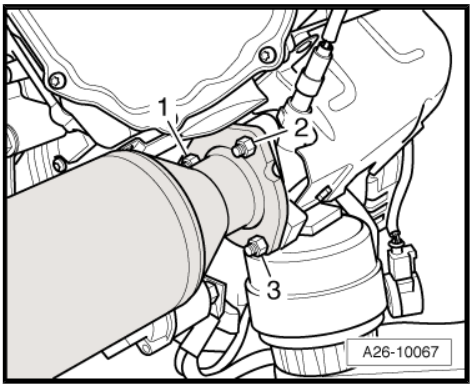

– Remove engine/gearbox securing bolts -1 ... 10-.

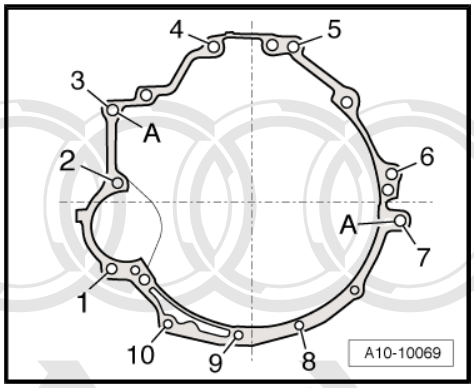

– Loosen clamping bolts -1- on sides of scissor-type assembly platform - VAS 6131 A- and pull rear section of platform together with gearbox towards rear -arrow-.

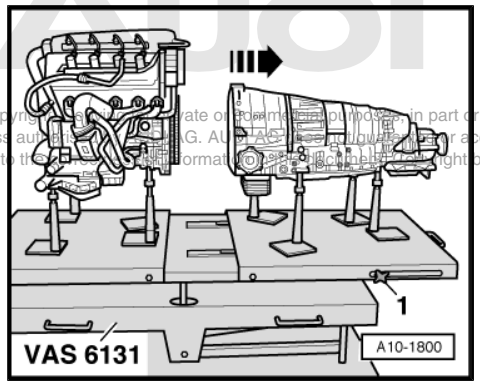

1.3 Installing engine

Note

- *Renew self-locking nuts and bolts when performing assembly work.*
- *Renew bolts which are tightened to a specified angle as well as seals, gaskets and O-rings.*
- *Secure all hose connections with the correct type of hose clips (same as original equipment) ⇒ Electronic parts catalogue .*
- *Fit all cable ties in the original positions when installing.*

– Clean input shaft splines on gearbox and splines of damper unit on flywheel; remove corrosion and apply only a very thin coating of grease for clutch plate splines - G 000 100- to the splines. Remove any excess grease.

– Check whether dowel sleeves for centring the engine/gearbox assembly are fitted in the cylinder block; install dowel sleeves if necessary.

– Push intermediate plate between engine and gearbox onto dowel sleeves.

– Bolt gearbox to engine (use new bolts).

Note

- *Tightening torques apply only to lightly greased, oiled, phosphated or black-finished nuts and bolts.*
- *Additional lubricant such as engine oil or gearbox oil may be used, but do not use lubricant containing graphite.*
- *Do not use degreased parts.*
- *Tolerance for tightening torques: ± 15%.*

Securing engine to gearbox

Item	Bolt [1]	Nm
1, 7	M10x115	65 [2]
2, 3, 4, 5, 6	M12x110	65
8, 9, 10	M10x80	45
A	Dowel sleeves for centralising	

- [1] Renew bolts for securing engine/gearbox.
- [2] Property class 10.9.

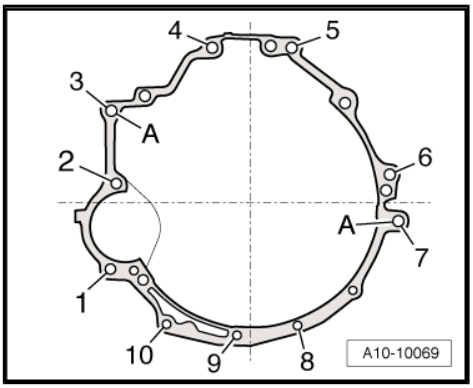

Installation is carried out in the reverse order; note the following:

– Install front exhaust pipes together with catalytic converter: left-side ⇒ page 305 , right-side ⇒ page 309 .

– Screw down the spindles for support elements (left-side) at engine/gearbox assembly.

– Unscrew both base plates for support elements (left-side) at scissor-type assembly platform - VAS 6131 A- .

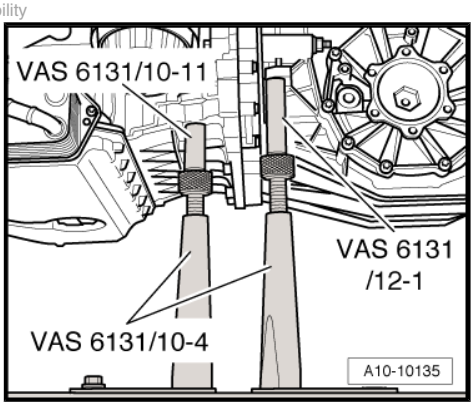

– Screw down the spindles for support elements (right-side) at engine/gearbox assembly.

– Unscrew both base plates for support elements (right-side) at scissor-type assembly platform - VAS 6131 A- .

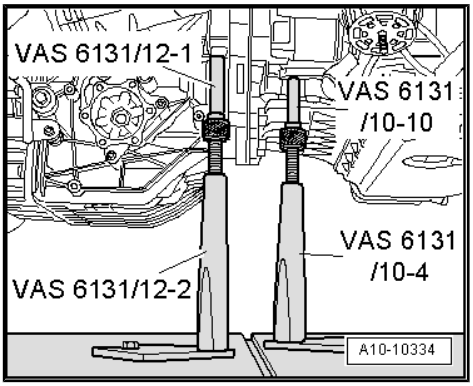

Note

The mounting points for engine (front) and gearbox (rear) remain unchanged.

– Secure ATF lines ⇒ Rep. gr. 37 .

– Set up scissor-type assembly platform - VAS 6131 A- with support set for Audi - VAS 6131/10- as follows:

Platform coordinates	Parts from support set for Audi - VAS 6131/10-			
B4 1)	/10-1	/10-4	/10-5	/10-11
G4 1)	/10-1	/10-4	/10-5	/10-12
B7	/10-1	/10-2	/10-5	/10-7
G7	/10-1	/10-2	/10-5	/10-7
B10	/10-1	/10-2	/10-5	/10-8 2)
G10	/10-1	/10-2	/10-5	/10-8 2)
C12 1)	/10-1	/10-3	/10-5	/10-6
F12 1)	/10-1	/10-3	/10-5	/11-3
D17 1)	/13-6			/13-2
E17 1)	/13-6			/13-2

- 1) Support elements remain unchanged.
- 2) Secure support elements only after installing the subframe.

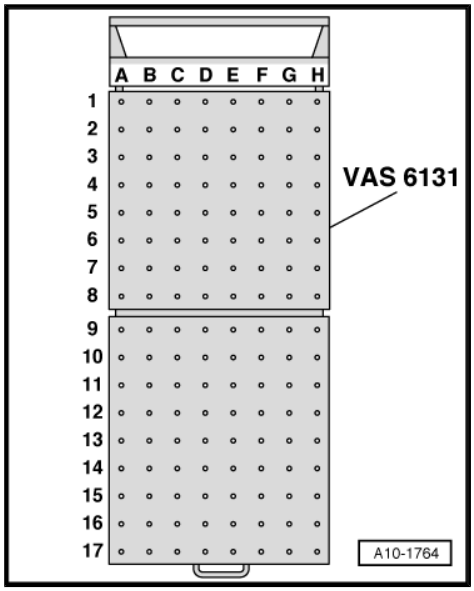

– Position engine cross member on the two support elements - VAS 6131/10-7- .

– Screw up spindles for support elements -VAS 6131/10-7- on both sides.

– Tighten base plates for support elements on scissor-type assembly platform - VAS 6131 A- to 20 Nm.

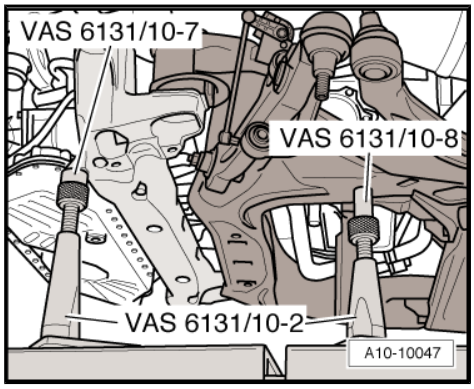

– Tighten bolts for engine mountings -arrows- on both sides.

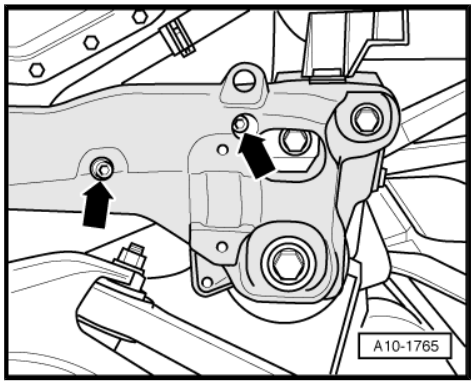

Note

A second mechanic is required for positioning the subframe on the support elements.

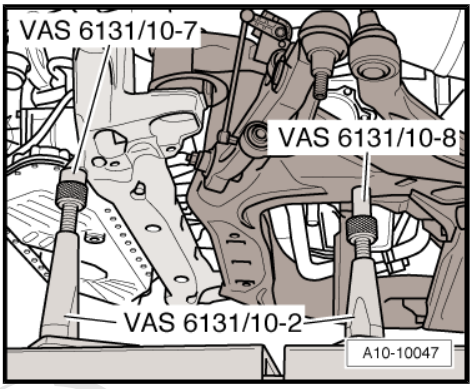

– Fit subframe onto the two support elements -VAS 6131/10-8- .
– Screw up spindles for support elements -VAS 6131/10-8- on both sides.
– Tighten base plates for support elements on scissor-type assembly platform - VAS 6131 A- to 20 Nm.

– Tighten bolts for gearbox mountings -arrows- on both sides.
– Attach electrical connector -1-.

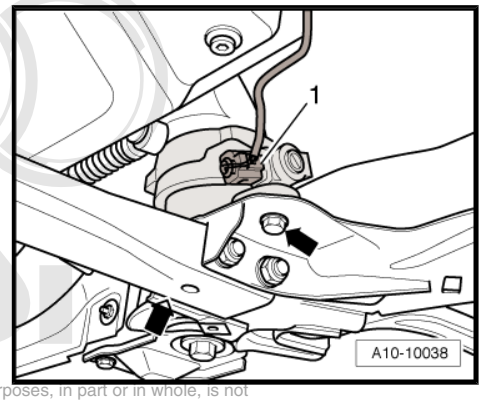

– Raise engine/gearbox assembly only until distance between subframe and body equals dimension -a-.
• Dimension -a- = 80 mm
– Attach selector lever cable to gearbox ⇒ Rep. gr. 37 .
– Guide engine/gearbox assembly together with subframe and engine cross member into the body from below using scissor-type assembly platform - VAS 6131 A- .
– Adjust the subframe and engine cross member according to the markings previously made on the longitudinal members.

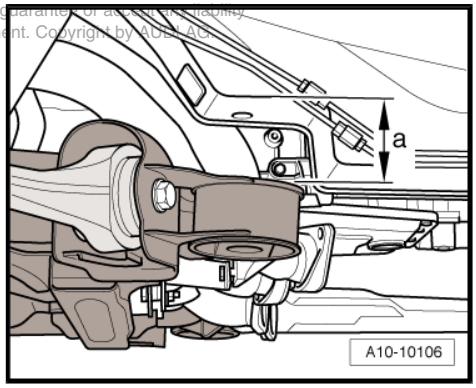

– Tighten subframe bolts only to specified torque (do not turn further); the bolts are only fully tightened after performing the wheel alignment check.

1 - 50 Nm
2 - 150 Nm
3 - 150 Nm

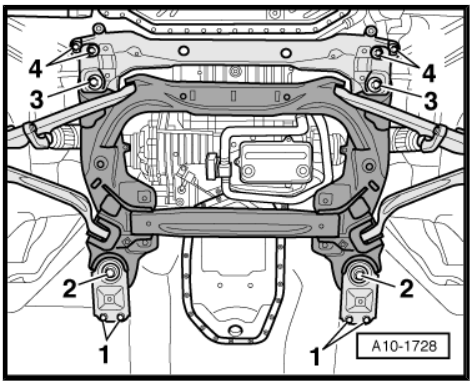

WARNING

The vehicle must not be driven at this stage.

– Tighten bolts -4- for engine cross member.

– Secure cross piece to lock carrier -arrows-.

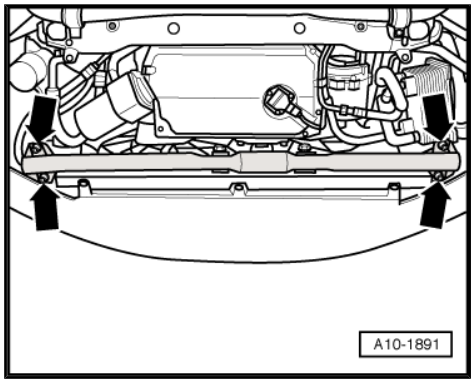

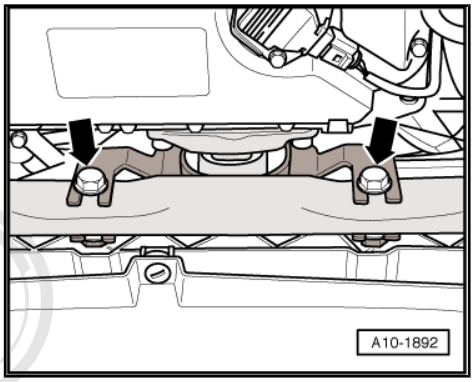

- Allow stop for torque reaction support to rest on rubber buffer for torque reaction support under its own weight and tighten bolts -arrows-.
- Secure ATF lines ⇒ Rep. gr. 37 .
- Install drive shafts ⇒ Rep. gr. 40 .
- Install guide links, track control links, anti-roll bar and suspension struts ⇒ Rep. gr. 40 .
- Align exhaust system so it is free of stress ⇒ page 318 .
- Install cross piece (front) ⇒ Rep. gr. 50 .
- Install cross piece (front) for subframe ⇒ Rep. gr. 40 .
- Install air conditioner compressor ⇒ Rep. gr. 87 .
- Electrical connections and routing ⇒ Current flow diagrams, Electrical fault finding and Fitting locations.
- Observe notes on procedures required after connecting battery ⇒ Electrical system; Rep. gr. 27 .

Caution

Do not use a battery charger to boost starting. There is danger of damaging the vehicle's control units.

- Install and adjust wiper arms ⇒ Electrical system; Rep. gr. 92 .
- Check oil level ⇒ page 217 .
- Bleed fuel system ⇒ page 285 .

Note

Do not reuse coolant.

- Fill cooling system ⇒ page 224 .
- Top up power steering fluid and bleed steering system ⇒ Rep. gr. 48 .
- Check ATF level ⇒ Rep. gr. 37 .
- Check adjustment of selector lever cable and re-adjust if required ⇒ Rep. gr. 37 .
- Perform wheel alignment check ⇒ Rep. gr. 44 .

WARNING

Tighten bolts for subframe to final setting after performing wheel alignment check.

Tightening torques

Note

- *Tightening torques apply only to lightly greased, oiled, phosphated or black-finished nuts and bolts.*
- *Additional lubricant such as engine oil or gearbox oil may be used, but do not use lubricant containing graphite.*
- *Do not use degreased parts.*
- *Tolerance for tightening torques: ± 15 %.*

Component		Nm
Bolts/nuts	M6	9
	M8	20
	M10	40
	M12	65
Except for the following:		
Engine mounting to engine cross member		23
Engine cross member to longitudinal member		68
Gearbox mounting to subframe		23
Drive shaft heat shield to gearbox		23
Battery cable to fuse box		20
Fuel supply line to fuel rail		23
Hydraulic line to power steering pump		47
Torque reaction support to top section of sump		40
Cross piece to lock carrier		42
Stop for torque reaction support to lock carrier		65
Hose clips (9 mm wide)		3

2 Removing and installing engine - vehicles with automatic gearbox 09L

⇒ "2.1 Removing engine", page 39

⇒ "2.2 Separating engine from automatic gearbox 09L", page 58

⇒ "2.3 Installing engine", page 66

2.1 Removing engine

Special tools and workshop equipment required

- Removal lever - 80 - 200-
- Hose clamps, up to 25 mm - 3094-
- Stepladder - VAS 5085-
- Engine bung set - VAS 6122-
- Scissor-type assembly platform - VAS 6131 A- with support set for Audi - VAS 6131/10- and supplementary set -VAS 6131/11-
- Drip tray for workshop hoist - VAS 6208-

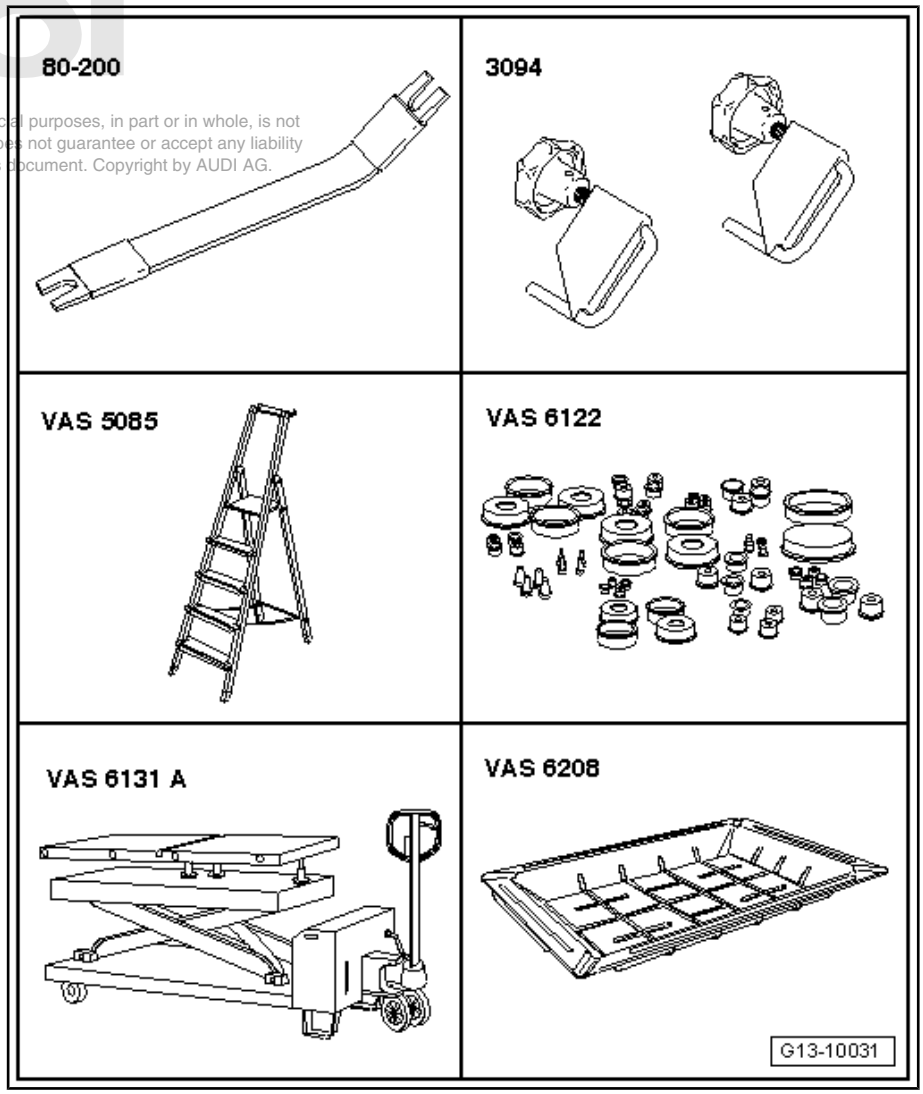

- Eye-head bolt - 3368-

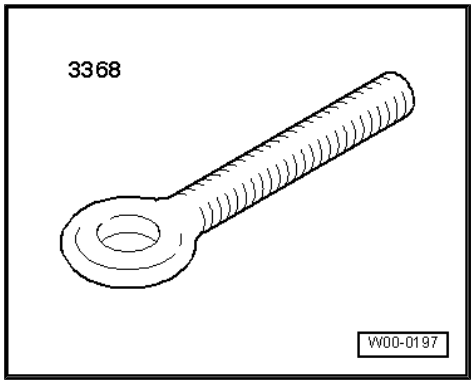

- Spark plug connector pliers - V.A.G 1922-

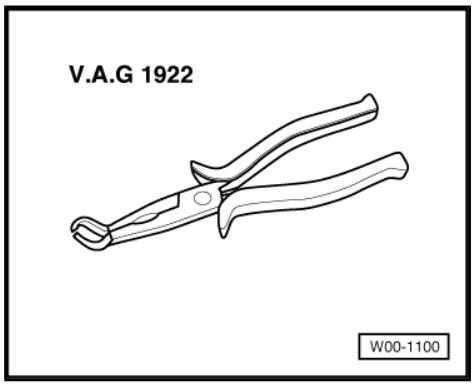

- Hose clip pliers - VAS 6362-

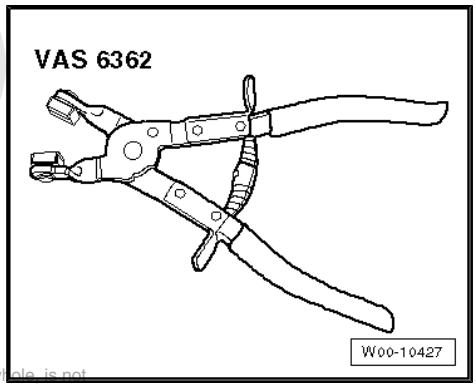

- Tensioning strap - T10038-

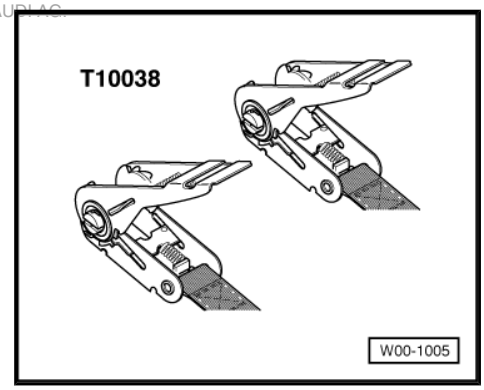

Note

If the engine is going to be separated from the gearbox (after the entire assembly is removed), you will additionally need supplementary set -VAS 6131/11- and -VAS 6131/12- .

Procedure

Note

- *The engine is removed from underneath together with the gearbox and subframe (with lock carrier installed).*
- *All cable ties which are released or cut open when removing must be fitted in the same position when installing.*
- *Seal off open lines and connections with clean plugs from engine bung set - VAS 6122- .*

WARNING

Make sure the vehicle cannot tip over when the engine is removed.

- ***Secure the vehicle, to do so, the luggage compartment must be empty.***

The fuel system operates at extremely high pressure. This can cause injury.

- ***The fuel pressure in the high-pressure section of the injection system must be reduced to a residual pressure prior to opening the system.***

– Reduce fuel pressure in high-pressure section of injection system ⇒ page 261 .

Caution

Electronic components are susceptible to damage.

- ***Observe notes on procedure for disconnecting the battery.***

Note

To make sure you can still move the front wheels when the battery has been disconnected, only disconnect the battery with the ignition key inserted.

– Remove luggage compartment side trim cover (right-side) -arrows-.

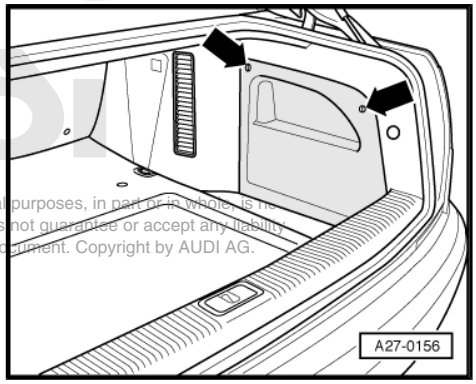

– Remove cover -1- over battery.

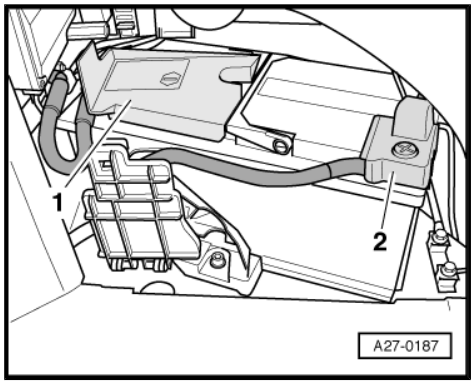

Note

Disregard -item 2-.

– Disconnect earth cable -arrow- at battery.

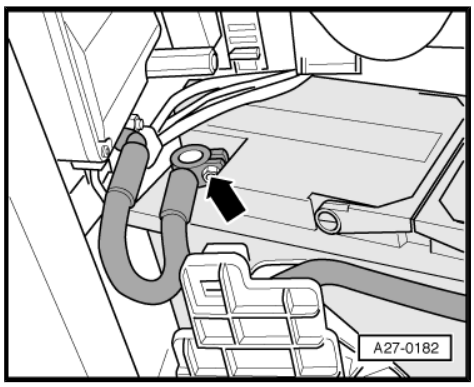

– Pull off engine cover panel (rear) -arrows-.

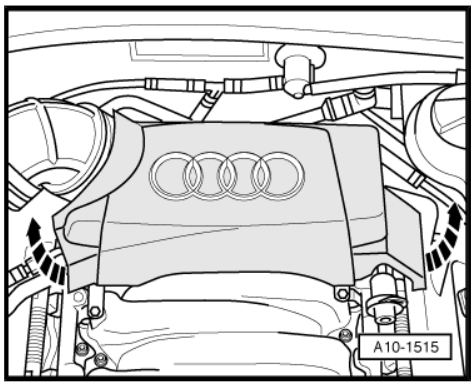

– Pull off engine cover panel (front) -arrows-.

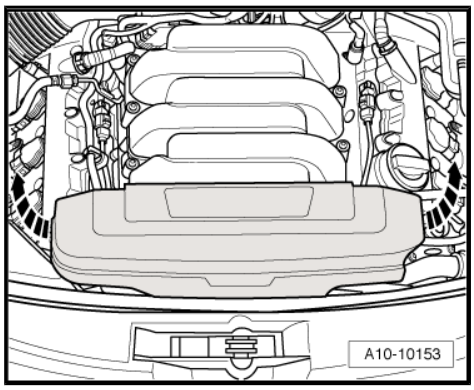

WARNING

Hot steam or hot coolant can escape when coolant expansion tank is opened; cover filler cap with cloth and open carefully.

– Open filler cap on coolant expansion tank.

– Remove engine compartment seal from lock carrier and wing panel flanges.

Note

Before removing, mark direction of rotation of poly V-belt with chalk or felt-tip pen. If the belt runs in the opposite direction when it is refitted, this can cause breakage.

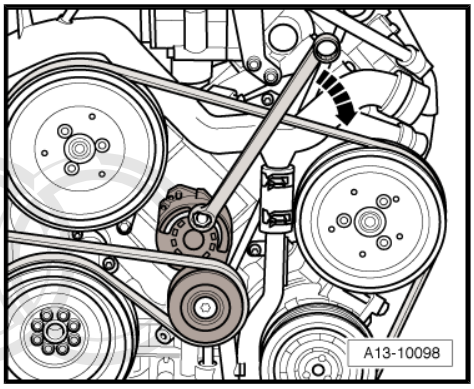

– Turn the tensioner in the direction of the -arrow- to slacken the poly V-belt.

– Remove poly V-belt and release pressure from the tensioner.

– Remove both front wheels.

Note

Secure brake discs with wheel bolts.

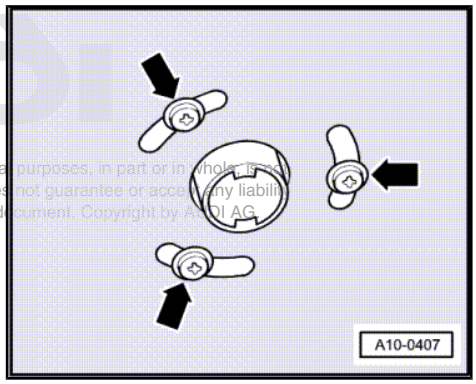

– If fitted, remove bolts -arrows- securing exhaust pipe for auxiliary/additional heater to noise insulation.

– Release quick-release fasteners -1- and -2- and take off noise insulation.

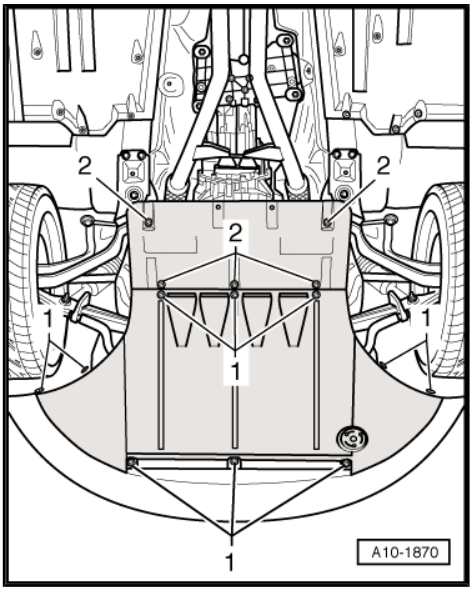

– Unbolt bracket for noise insulation -arrows-.

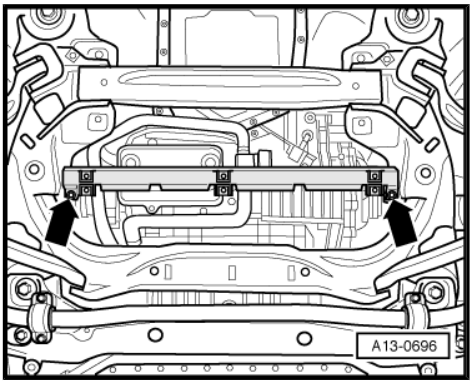

– Unbolt cross piece at lock carrier -arrows-.

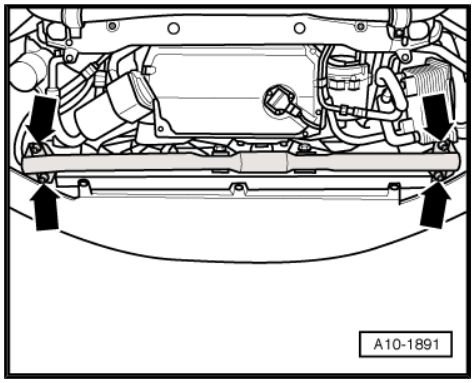

– Unscrew bolts -arrows- and remove cross piece from stop for torque reaction support.

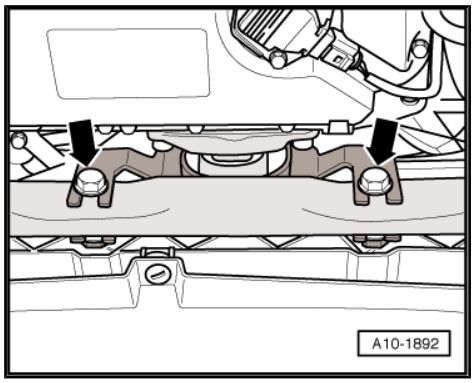

– Unscrew bolts -arrows- and remove torque reaction support from engine.

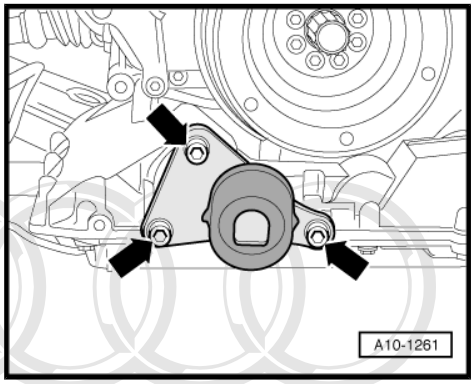

– Place drip tray for workshop hoist - VAS 6208- under engine.
– Disconnect coolant hose -arrow- at engine oil cooler and drain off remaining coolant.
– Then remove coolant hose.

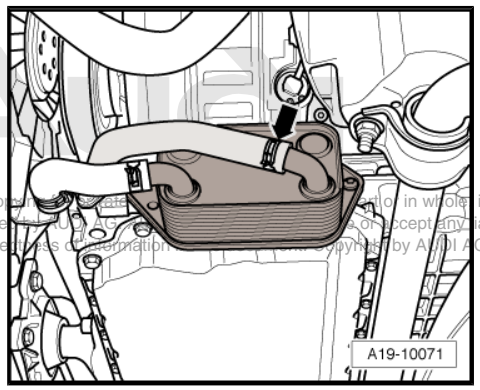

– Disconnect coolant hose -arrow- at thermostat before ATF cooler and drain off coolant.

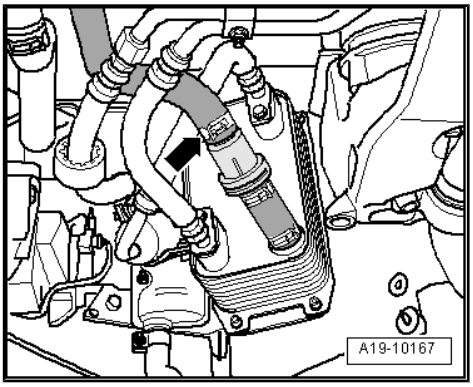

– Remove bolts -arrows-.
– Detach ATF cooler -1- and tie up to engine cross member.

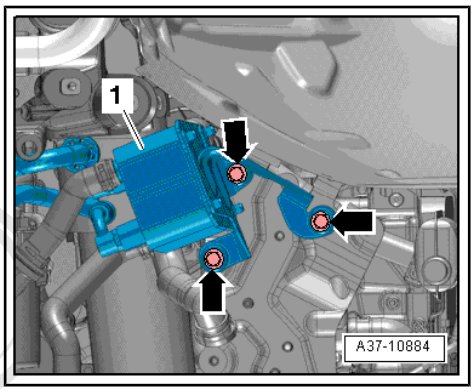

– Detach coolant hose -arrow- at bottom left of radiator.

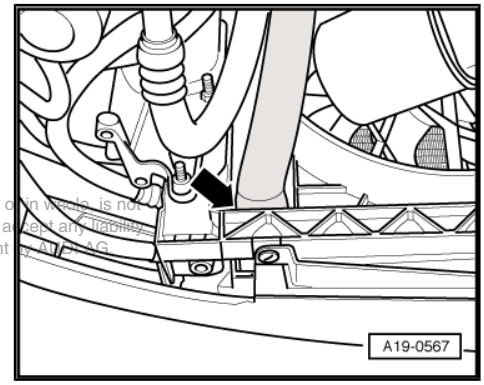

– Detach coolant hose (front right) -1- from coolant pipe.
– Unscrew bolts -2- and -3- for coolant pipe.

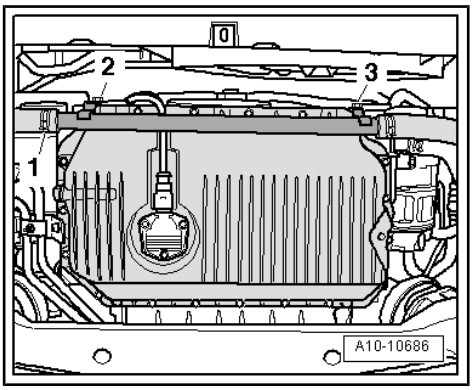

Note

The coolant pipe is removed together with the coolant hose (left-side) at a later stage.

– Detach coolant hose -1- from engine oil cooler.

– Unscrew bolts -arrows- and detach engine oil cooler.

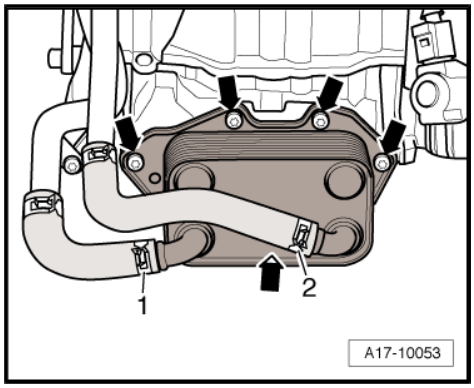

Note

- *Disregard -item 2-.*
- *Plug openings on sump with clean plugs.*

– Unplug electrical connector -1- for magnetic clutch on air conditioner compressor.

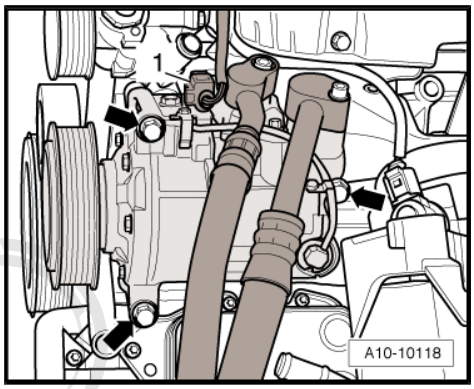

WARNING

The air conditioner refrigerant circuit must not be opened.

– Unscrew air conditioner compressor from bracket -arrows-.

Note

To prevent damage to the refrigerant lines, ensure that the pipes and hoses are not stretched, kinked or bent.

– Tie up air conditioner compressor with lines attached to left-side of vehicle.

Note

Lay a cloth under the hydraulic lines to catch any escaping hydraulic fluid.

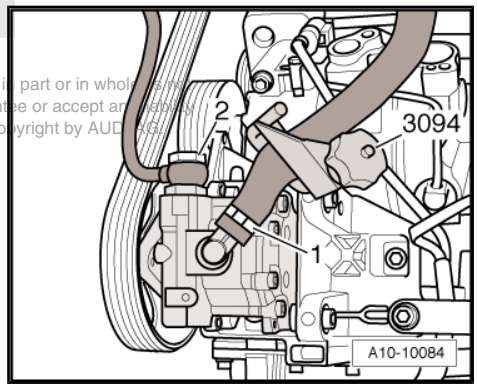

– Clamp off hydraulic hose -1- for power steering pump using a hose clamp - 3094- .

– Disconnect hydraulic hose from power steering pump.

– Unbolt hydraulic line -2- from power steering pump and place hydraulic line on top of longitudinal member.

– Detach coolant hose -arrow- from coolant pipe (front).

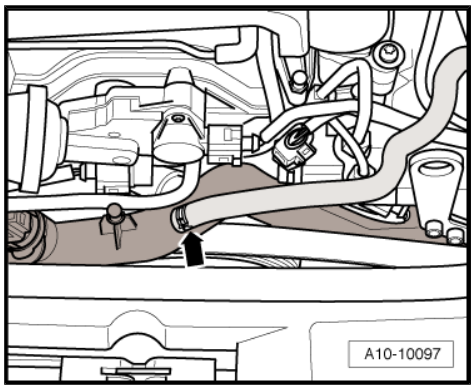

– Detach coolant hose (left-side) -arrows- from engine and move hose clear.
– Guide coolant hose downwards and detach together with coolant pipe (bottom front).

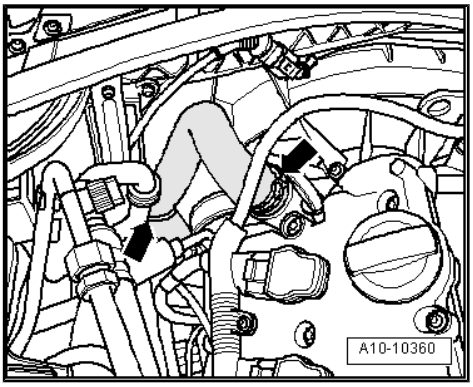

– Detach coolant hose -arrow- from coolant expansion tank.
– Move coolant hose at engine clear.

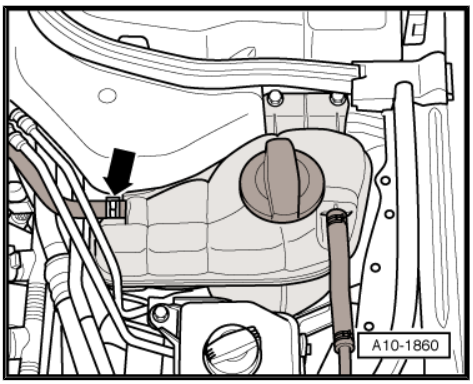

– Pull non-return valve -2- off connection at air intake hose.
– Unclip vacuum line -1- and fuel line -3- from retainer on air intake hose.
– Release hose clips -arrows- and remove air intake hose.

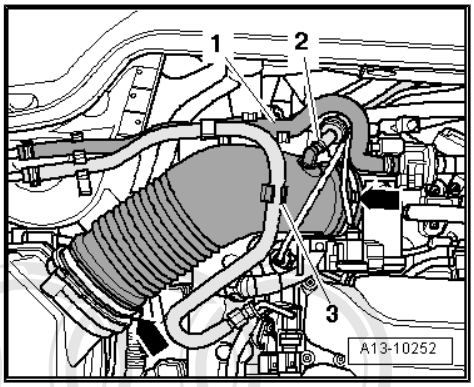

– Unplug electrical connector -1-.
– Detach vacuum hose -2-.
– Remove bolts -arrows-.
– Take out air cleaner housing.

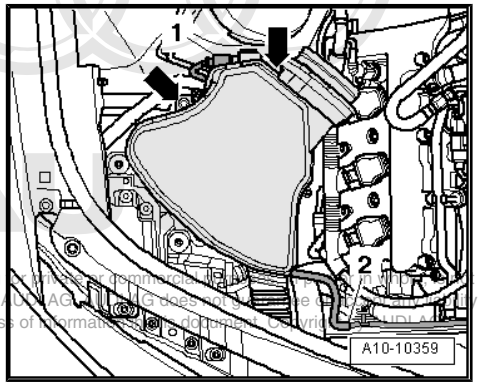

– Detach coolant hoses -1- and -2-.

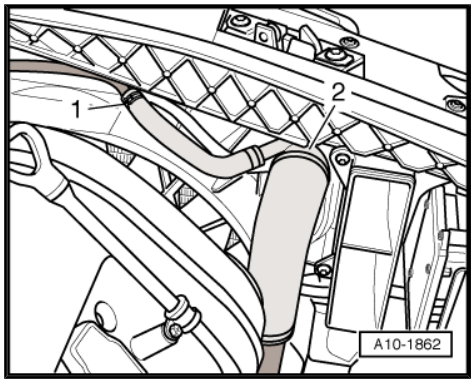

Note

The coolant hose (right-side) remains connected to the ATF cooler when the ATF cooler is moved clear.

Caution

Rules for cleanliness when working on the injection system ***⇒ page 6*** ***.***

WARNING

The fuel system is pressurised. Wrap a cloth around the connection before opening the system. Then release pressure by carefully loosening the connection.

– Disconnect fuel line -arrow- and move it clear.

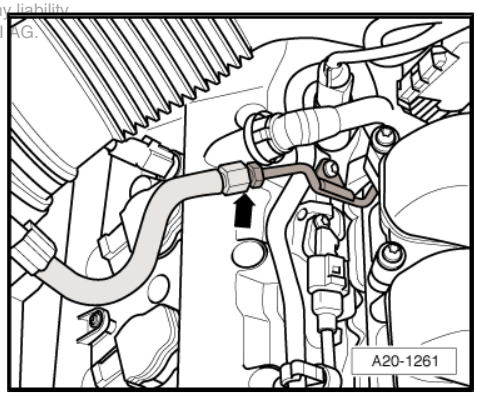

– Disconnect vacuum hose -arrow- leading to activated charcoal filter.

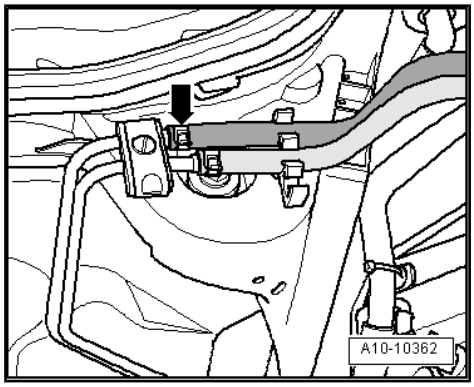

– Detach vacuum hose -arrow- going to brake servo at plenum chamber partition panel.

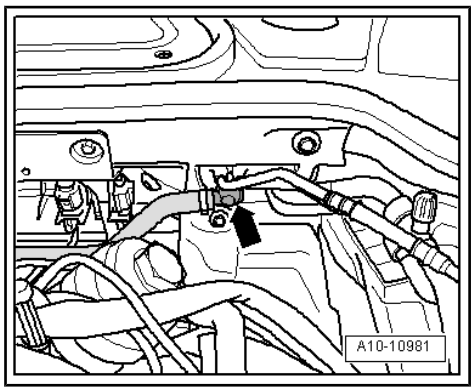

– Unscrew nuts and detach bracket for connectors -1 … 4- (centre) from plenum chamber partition panel.

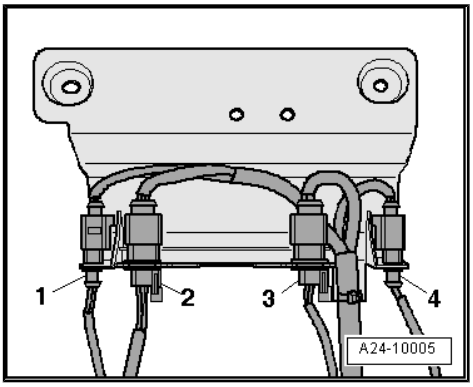

– Lift retaining clip and detach coolant hose -arrow-.

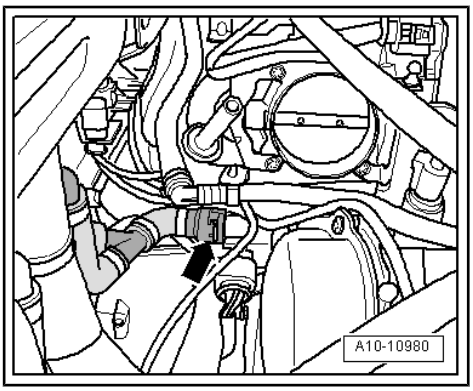

Vehicles with auxiliary heater:

– Detach coolant hose -arrow- at rear left of engine.

– Remove coolant hose.

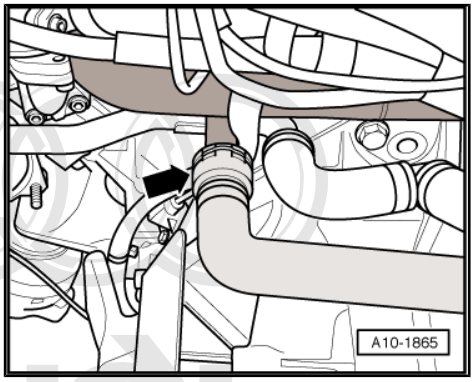

Note

Shown from rear with engine removed for illustration purposes.

All vehicles:

– Pull off rubber seal -1- on plenum chamber covers.

– Detach plenum chamber covers -2- and -3-.

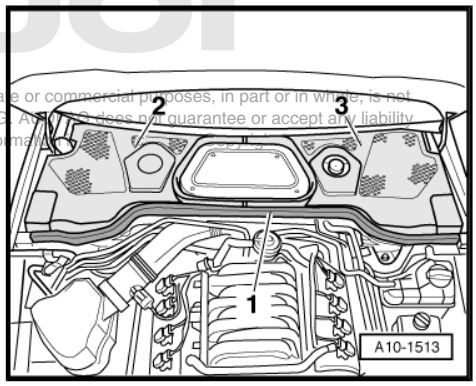

– Lever off caps on windscreen wiper arms with a screwdriver.
– Loosen hexagon nuts -arrows- several turns.
– Loosen wiper arms from wiper shafts by tilting slightly, remove hexagon nuts and take off wiper arms.
– Remove dust and pollen filter ⇒ Rep. gr. 87 .

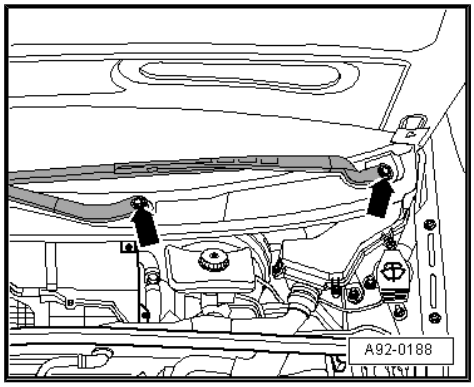

Note

Cover air duct at air conditioner housing with clean cloth to prevent anything falling in.

– Remove bolts -arrows- for cowl panel trim -1- on both sides.

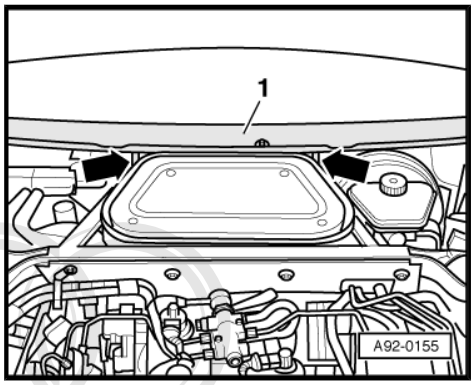

Caution

To avoid cracking the cowl panel trim -1- during removal, apply a small amount of soap solution to the joint between the windscreen and the cowl panel trim and pull the trim vertically up out of the windscreen surround, starting from the edge of the windscreen.

– Carefully pull cowl panel trim off retainer at windscreen.

– Unscrew body brace -arrow-.

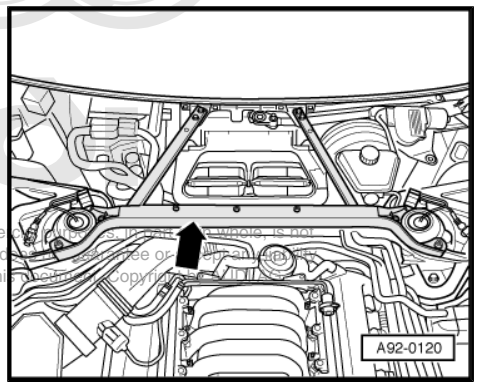

– Unclip cover for engine control unit.
– Remove bolts -arrows-.
– Detach retainer and engine control unit from electronics box (plenum chamber).

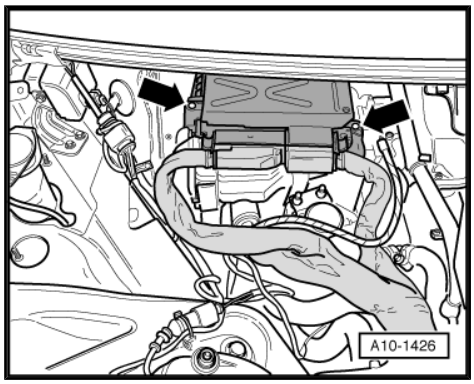

Note

The electrical wires remain connected.

– Turn air quality sensor - G238- 90° anti-clockwise -arrow- and remove from retainer.
– Release retaining clips -1 ... 4-.
– Open electronics box (plenum chamber) cover slightly and pull off to front.

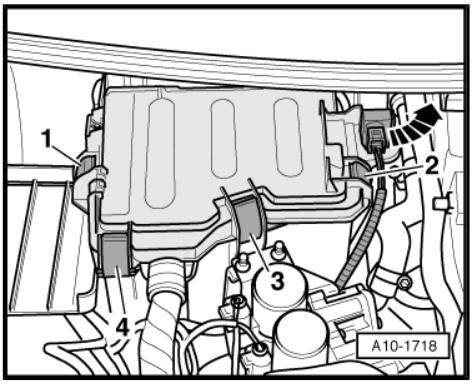

– Disconnect the electrical multi-pin connectors -1- using spark plug connector pliers - V.A.G 1922- .
– Detach engine wiring harness at electronics box and at bulkhead.
– Place engine control unit with wiring harness attached on top of engine.

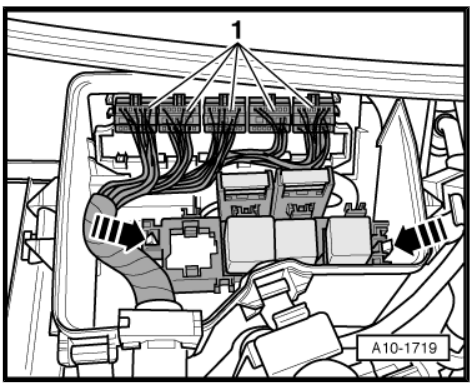

Note

Secure the engine control unit to prevent it falling.

– Remove A-pillar trim (right-side) ⇒ Rep. gr. 70 .
– Fold back floor covering.
– Unbolt protective cover above main fuse holder.
– Fold cover -2- to side.
– Remove nut -4-.
– Detach terminal 30 wire to starter.

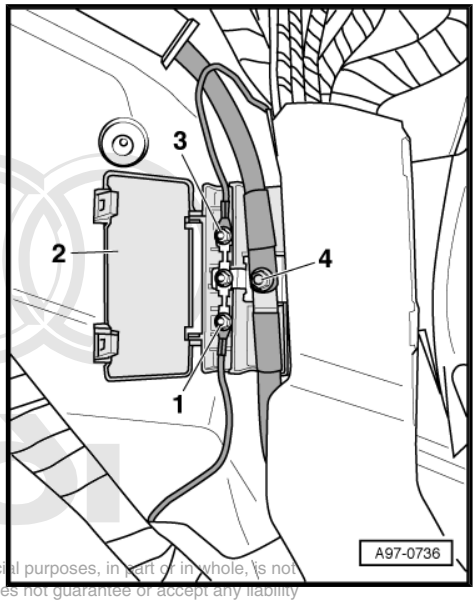

Note

Disregard items -1- and -3-.

– Remove front and rear sections of front right wheel housing liner ⇒ Rep. gr. 66 .
– Unscrew wiring clamp -1- in wheel housing (front right).
– Pull wiring harness out from interior -arrow-.

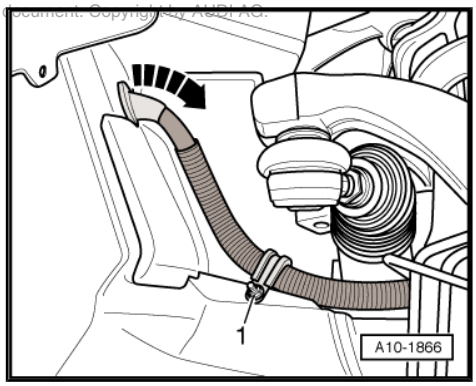

– Unplug electrical connectors -1- and -3-.
– Unbolt earth cable -2- at longitudinal member.
– Unscrew bracket for wiring harness at longitudinal member -arrows- and move wiring harness clear.

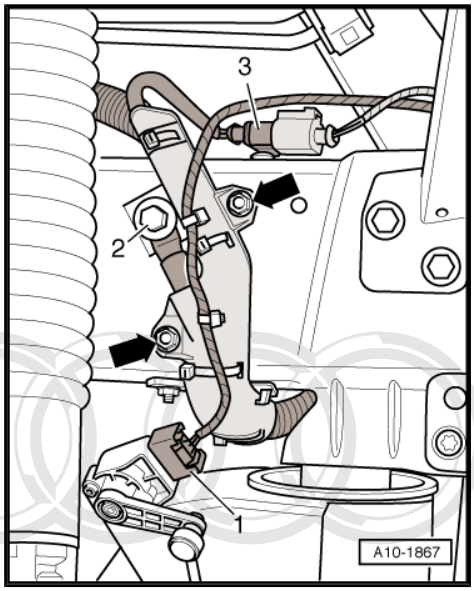

– Have a 2nd mechanic press the brake pedal.

> **Caution**
>
> ***When slackening the flange bolt securing the drive shaft, the wheel bearing must not be under load (vehicle must not be standing on its wheels).***

– Unscrew flange bolt -2- from drive shaft -1- (left and right).

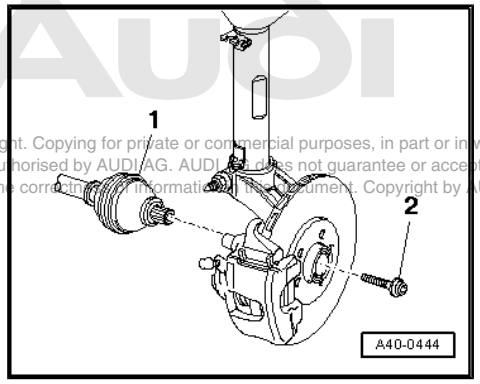

– Unscrew bolts (left and right) -arrows- evenly.
– Take out anti-roll bar.

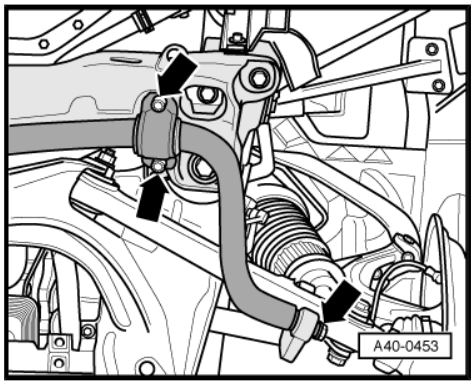

– Unplug electrical connector -2- at vehicle level sender.
– Detach coupling rod -1- at track control link.

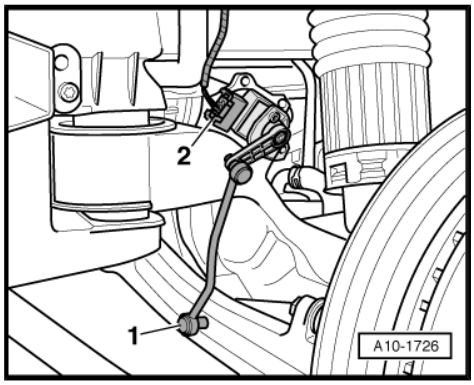

– Fit eye-head bolt - 3368- from below in bore on suspension turret on both sides.
– Secure eye-head bolts - 3368- with nut -2- and washer -1- (screw down nut several turns but not all the way down).

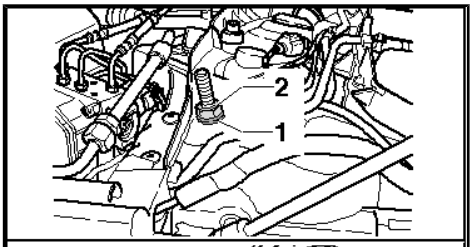

Caution

The weight of the wheel bearing housings must be supported in order to prevent damage to the joints of the upper links.

– Tie up wheel bearing housing on each side using tensioning strap - T10038- as illustrated.

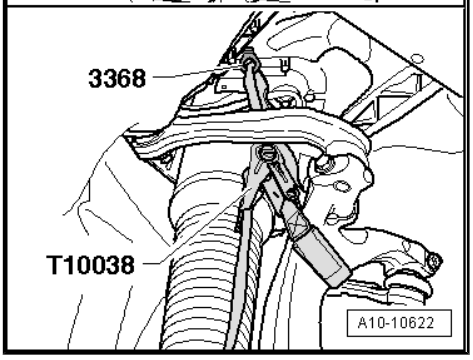

– Unplug electrical connector -2- for front wheel speed sensor.
– Move electrical wire -1- clear.

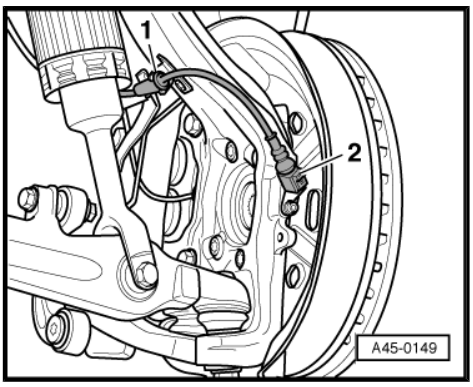

– Unbolt suspension strut from track control link -arrow-.

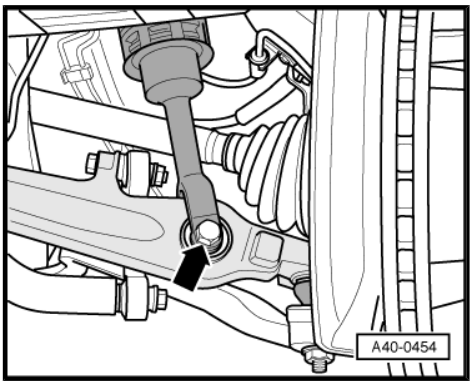

– Unbolt guide link -1- and track control link -2- at subframe.

Note

If necessary, detach rear section of wheel housing liner when pulling out guide link bolt -1-.

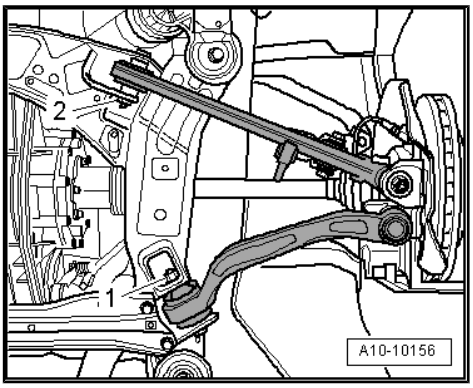

– Pivot guide link -1- and track control link -2- outwards.

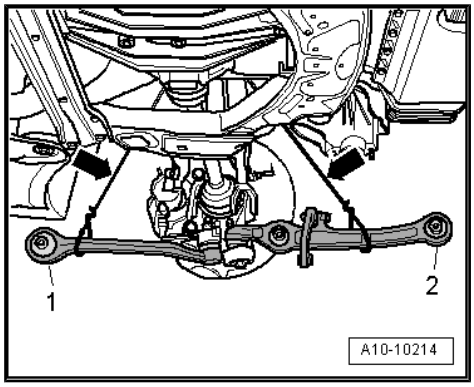

> **Caution**
>
> *The guide link and track control link must not be allowed to hang down without support. Tie up both the guide link and track control link to wheel bearing housing as illustrated -arrow-.*

– Repeat procedure on other side of vehicle.

– Remove noise insulation in wheel housing (left-side) -arrows-.

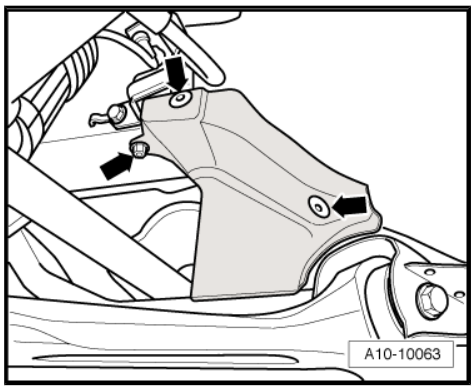

– Remove noise insulation in wheel housing (right-side) -arrows-.

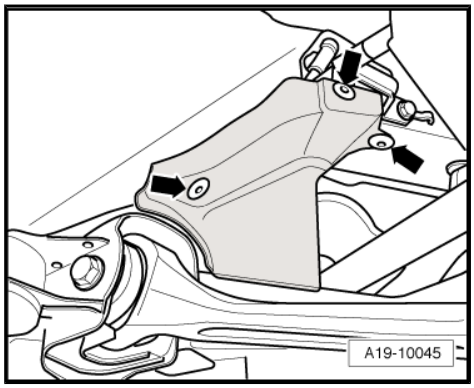

– Unbolt heat shield -1- for drive shaft.

– Unbolt drive shaft from flange shaft on gearbox.

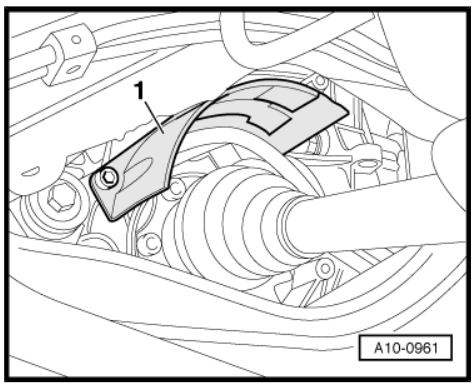

> **Caution**
>
> *Take care not to damage brake hose.*

– Pivot wheel bearing housing outwards and remove drive shaft.

– Repeat procedure on other side of vehicle.

– Remove bolts -arrows- and lay tunnel cross member down on front exhaust pipes.

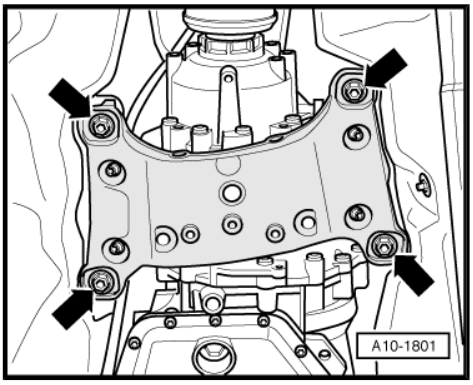

– If fitted, unscrew heat shield -A- for propshaft -arrows-.
– Unscrew bolts securing propshaft to gearbox.
– Slide rear propshaft together towards rear final drive; the constant velocity joints can be moved axially.
– Tie up propshaft to one side on vehicle body.

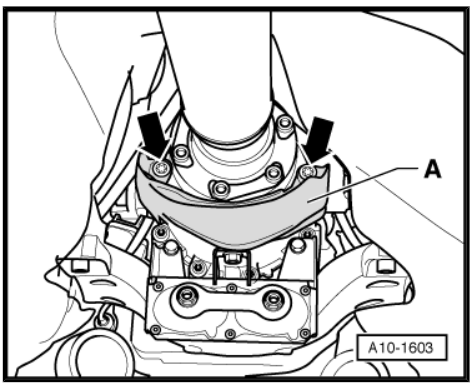

Set up the scissor-type assembly platform as follows:

– Set up scissor-type assembly platform - VAS 6131 A- with support set for Audi - VAS 6131/10- and supplementary set - VAS 6131/13- as follows:

Platform coordinates	Parts of support set for Audi - VAS 6131/10- and supplementary set -VAS 6131/13-			
B4	/10-1	/10-4	/10-5	/10-12
G4	/10-1	/10-4	/10-5	/10-12
B7	/10-1	/10-2	/10-5	/10-7
G7	/10-1	/10-2	/10-5	/10-7
B10	/10-1	/10-2	/10-5	/10-8
G10	/10-1	/10-2	/10-2	/10-8
C14	/10-1	/10-3	/10-5	/10-13
F14	/10-1	/10-3	/10-5	/10-12
D17	/13-6			/13-2
E17	/13-6			/13-2

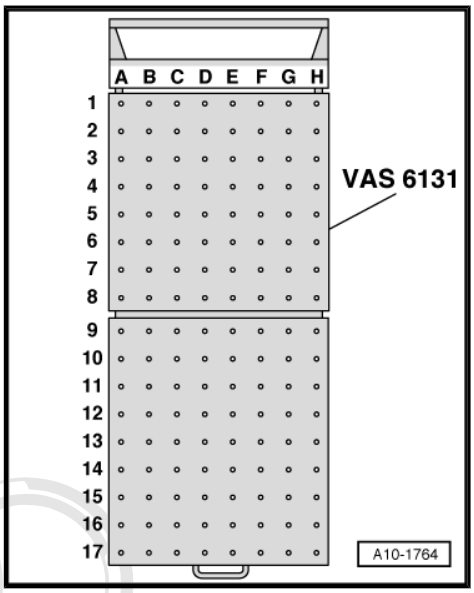

– Initially tighten the support elements on the assembly platform only hand-tight.
– Adjust the scissor-type assembly platform - VAS 6131 A- so that it is horizontal.
• Take note of spirit level (bubble gauge).
– Place scissor-type assembly platform - VAS 6131 A- under engine/gearbox assembly.

– Position support elements from -VAS 6131/10- at front of engine, as shown in illustration.
– Make sure that threaded spindles are screwed in completely.

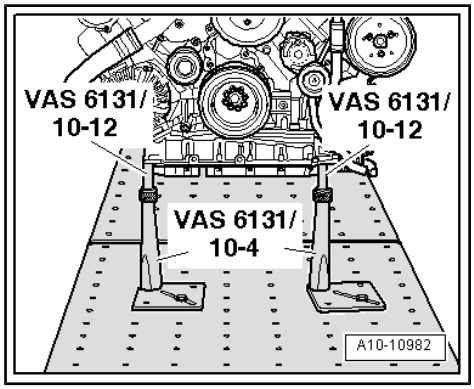

– Position support elements from -VAS 6131/10- at left and right of subframe, as shown in illustration.

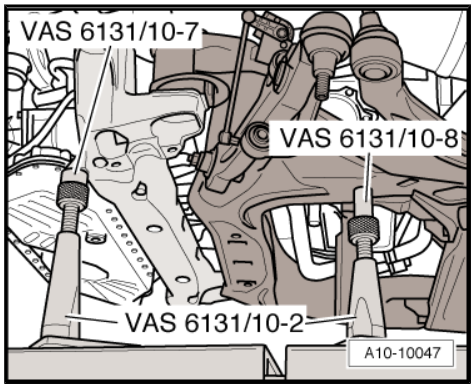

– Position support elements from -VAS 6131/10- at rear of gearbox, as shown in illustration.
– Turn all spindles for the support elements upwards until all locating lugs make contact with the mounting points.

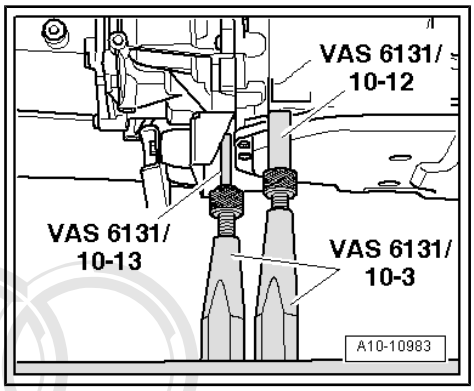

– Position support elements from -VAS 6131/13- underneath front silencer (left-side and right-side), as shown in illustration.
– Tighten base plates for support elements to 20 Nm on scissor-type assembly platform - VAS 6131 A- .

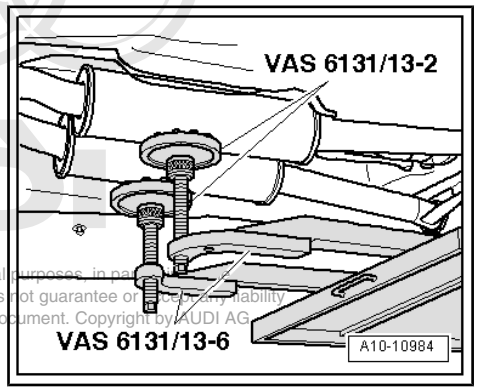

– Unbolt cross piece (front) -arrows-.

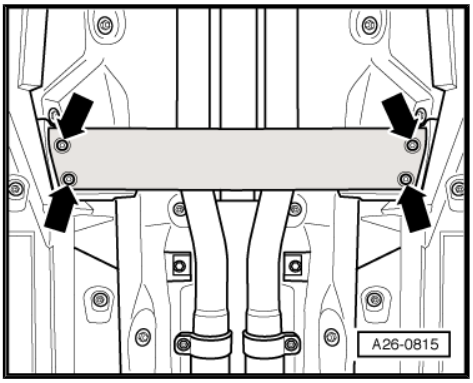

Disconnect exhaust system at clamps -1- (left-side) and -2- (right-side).

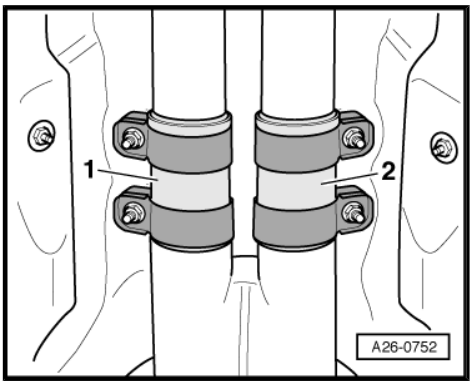

– Mark installation position of subframe on longitudinal members with felt-tip pen.
– Remove bolts -1- and -4-.
– Remove bolts -2- and -3- in a diagonal sequence and in stages.

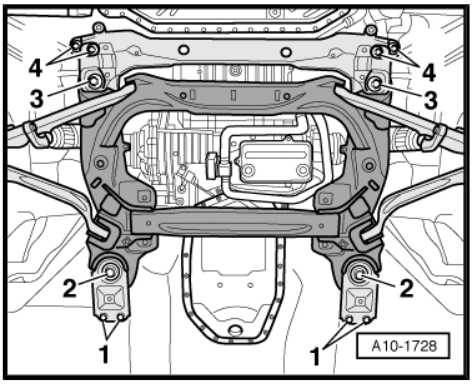

Note

- *Check that all hoses and wiring connections between engine, gearbox, subframe and body have been detached.*
- *Carefully guide out engine/gearbox assembly with subframe from engine compartment when lowering to avoid damage.*

– Lower the engine/gearbox assembly using scissor-type assembly platform - VAS 6131 A- initially only as far as distance -a-.

• Dimension -a- = 100 mm

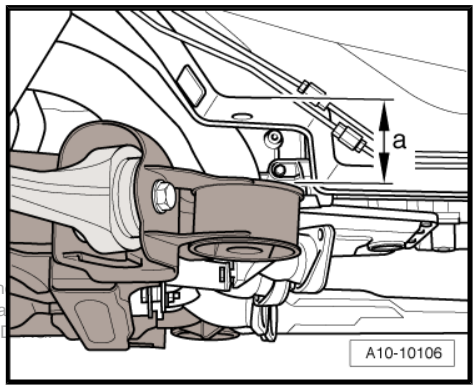

– Mark installation position of support bracket for selector lever cable with felt-tip pen for re-installation.
– Pry ball head -1- of selector lever cable off gearbox selector lever using removal lever - 80 - 200- -arrow-.
– Pull off securing clip -2- and remove selector lever cable from gearbox.

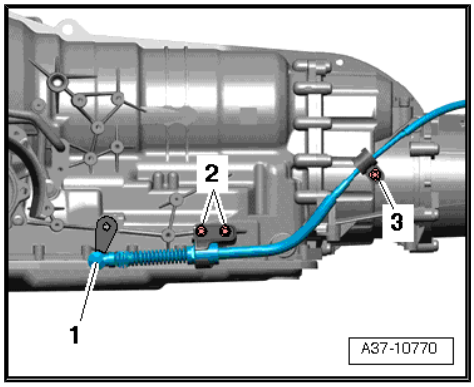

Note

Take care not to bend or kink selector lever cable.

– Check that all hoses and wiring connections between engine, gearbox, subframe and body have been detached.
– Carefully guide out engine/gearbox assembly with subframe from engine compartment when lowering to avoid damage.
– Lower engine/gearbox assembly gradually.
– Pull out scissor-type assembly platform - VAS 6131 A- from under the vehicle.

2.2 Separating engine from automatic gearbox 09L

Special tools and workshop equipment required

♦ Support bridge - 30 - 211 A-

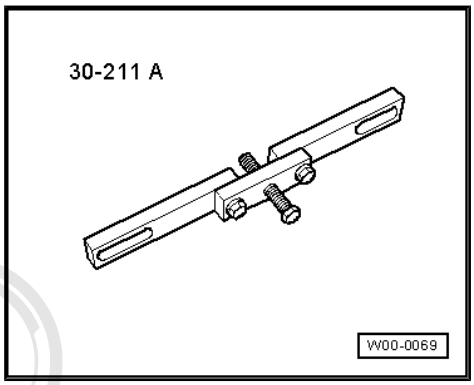

♦ Support set for Audi - VAS 6131/10- , supplementary set -VAS 6131/11- and -VAS 6131/12-
♦ Adapter - T40058-

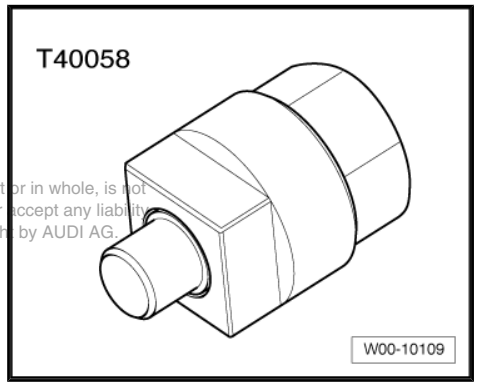

Procedure

- Engine/gearbox assembly removed and secured to scissor-type assembly platform - VAS 6131 A- .

– Unplug electrical connector -1- at gearbox mounting (left-side) and move clear.

– Remove bolts -arrows- for gearbox mountings.

– Repeat procedure on opposite side of vehicle.

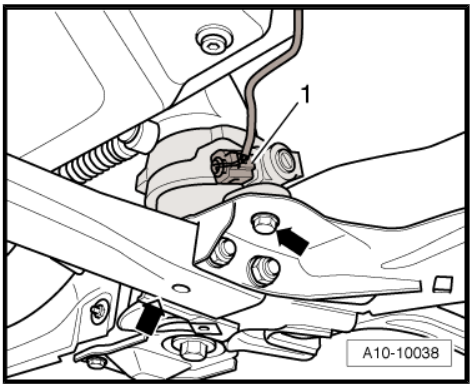

– Remove bolts -1- and detach bracket for noise insulation.

– Unscrew bolts -2- and remove cross member.

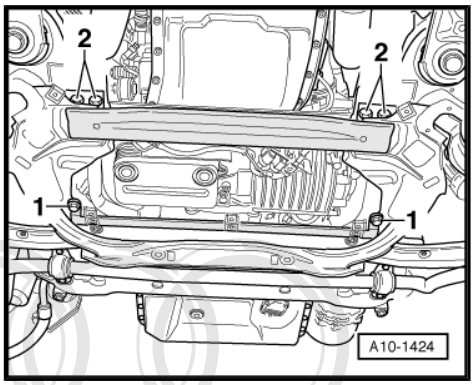

– Screw down spindles of support elements -2- (left and right) at subframe as far as possible.

– Remove locating lugs from spindles.

– Take out subframe -3- from the side.

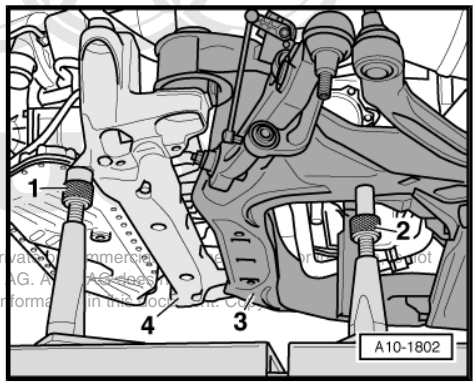

Note

A second mechanic is required for removing the subframe.

– Screw down spindles of support elements -1- (left and right) at engine cross member -4- as far as possible.

– Remove bolts -arrows- for engine mounting (left and right-side)

– Take out engine cross member.

– Unscrew the 4 base plates for support elements (for engine cross member and subframe) at assembly platform - VAS 6131 A- .

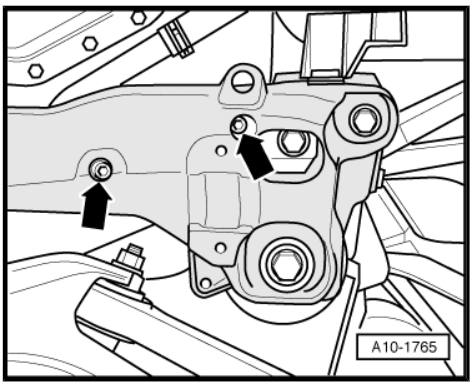

– Remove bracket -arrow- for ATF lines.

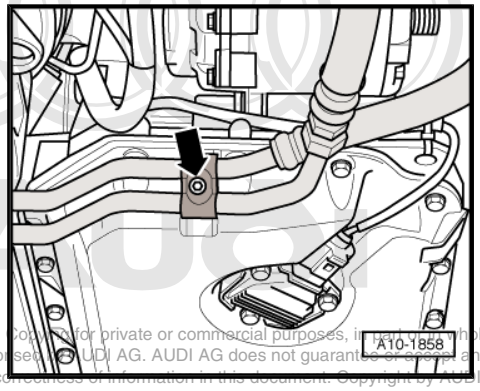

Note

The mounting points for engine (front) and gearbox (rear) remain unchanged.

– Set up scissor-type assembly platform - VAS 6131 A- with support set for Audi - VAS 6131/10- , support set -VAS 6131/11- and supplementary set -VAS 6131/12- as follows:

Platform coordinates	Parts of support set for Audi - VAS 6131/10- , supplementary set -VAS 6131/11- and supplementary set -VAS 6131/12-			
B4 1)	/10-1	/10-4	/10-5	/10-12
G4 1)	/10-1	/10-4	/10-5	/10-12
B7	/10-1	/10-4	/10-5	/10-11
G7	/10-1	/10-4	/10-5	/10-10
B10	/10-1	/10-2	/10-5	/12-1
G10	/10-1	/10-2	/10-5	/11-3
C14 1)	/10-1	/10-3	/10-5	/10-13
F14 1)	/10-1	/10-3	/10-5	/10-12
D17 1)	/13-6			/13-2
E17 1)	/13-6			/13-2
• 1) Support elements remain unchanged.				

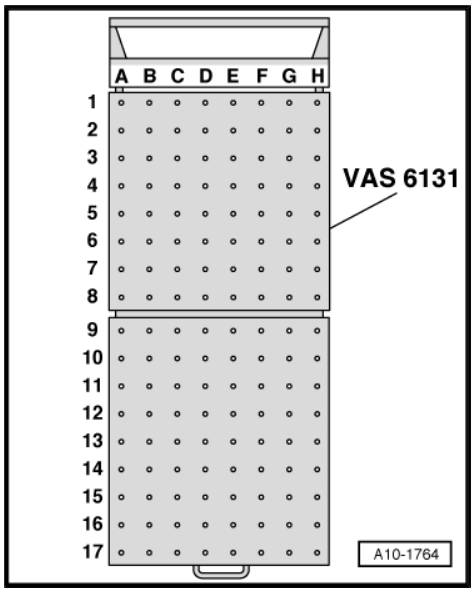

– Position support elements from -VAS 6131/10- and -VAS 6131/12- on left side of engine/gearbox assembly, as shown in illustration.

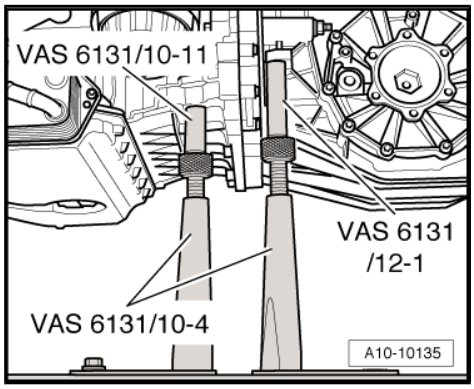

– Place support elements from -VAS 6131/10- and -VAS 6131/12- at right of engine/gearbox assembly, as shown in illustration.

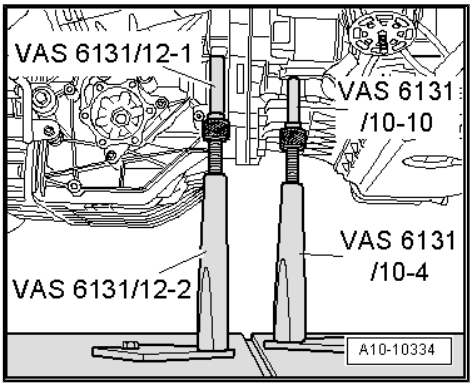

– Place support elements from -VAS 6131/10- and -VAS 6131/12- at left of gearbox, as shown in illustration.

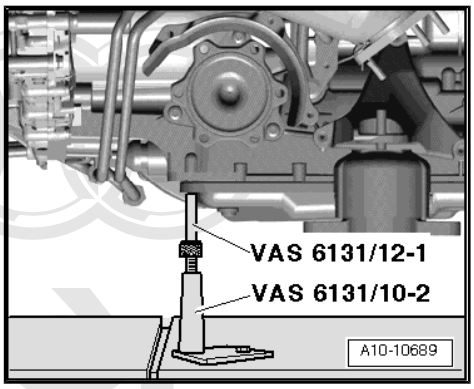

– Position support elements from -VAS 6131/10- and -VAS 6131/11- on right side of gearbox, as shown in illustration.
– Turn spindles for the support elements upwards until all locating lugs make contact with the mounting points.
– Tighten base plates for support elements to 20 Nm on scissor-type assembly platform - VAS 6131 A- .

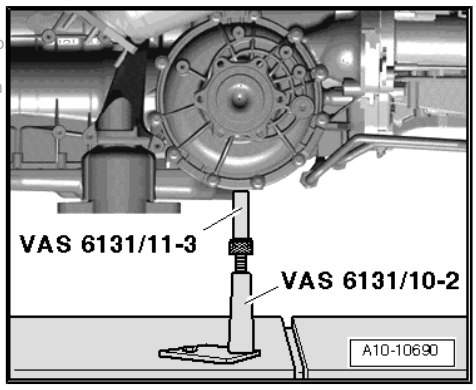

– Unplug electrical connector -arrow- at engine speed sender - G28- .

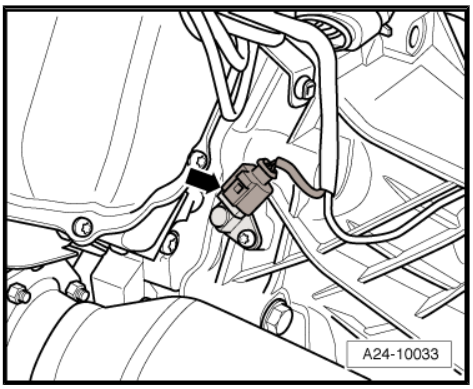

Caution

Do NOT touch connector contacts in gearbox connector with your hands.

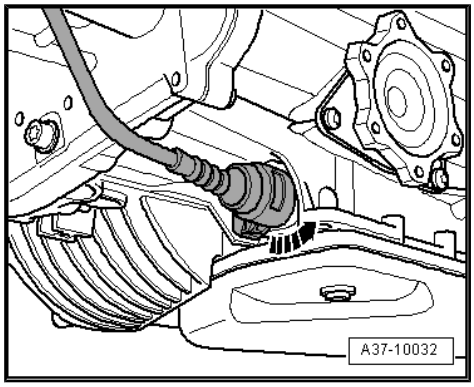

– Touch gearbox housing with your hand (without wearing gloves) to eliminate static charge.

– Turn retainer catch anti-clockwise -arrow-, then unplug electrical connector at gearbox and move wiring harness clear.

– Unplug electrical connector -4- for Lambda probe 2 after catalytic converter - G131- and move wiring clear.

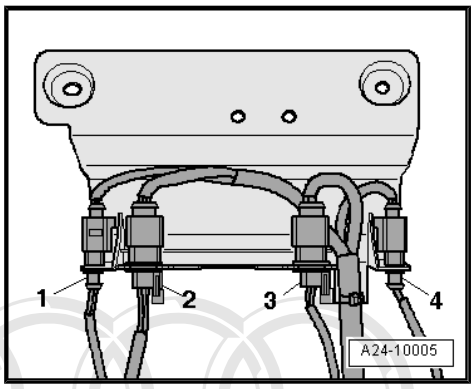

Note

To avoid any damage, the flexible joint in the front exhaust pipe must not be bent more than 10°.

– Unscrew nut -left arrow- at mounting bracket for front exhaust pipe (left-side).

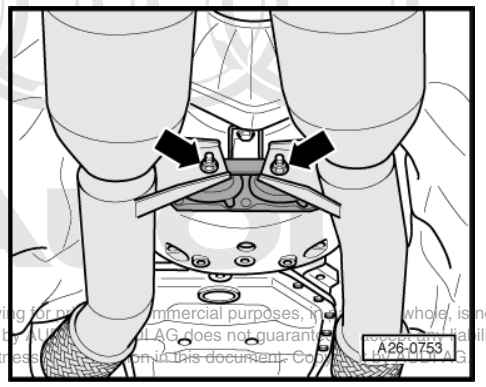

– Remove bolt -2- on bracket (left-side) for front exhaust pipe.

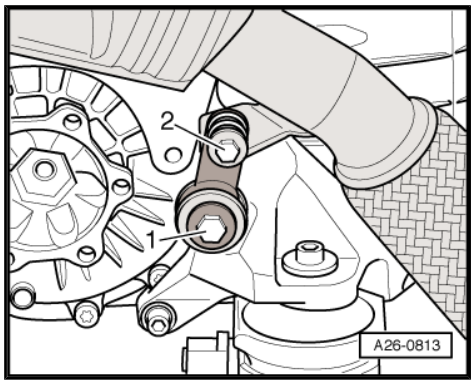

Note

Disregard -item 1-.

– Unscrew nuts -1 ... 3-.

– Detach front exhaust pipe (left-side) with catalytic converter.

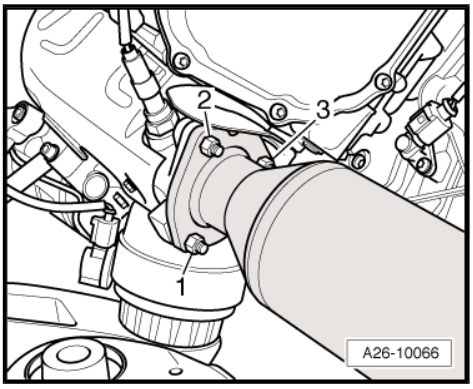

– Unplug electrical connector -1- for Lambda probe after catalytic converter - G130- and move wiring clear.

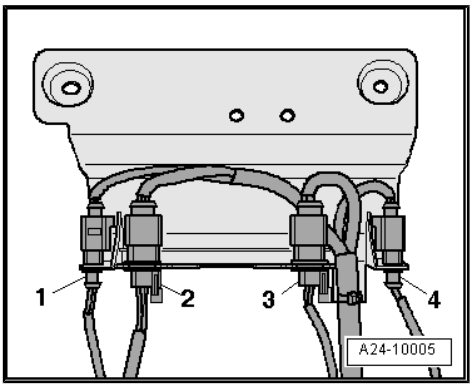

Note

To avoid any damage, the flexible joint in the front exhaust pipe must not be bent more than 10°.

– Unscrew nut -right arrow- at mounting bracket for front exhaust pipe (right-side).

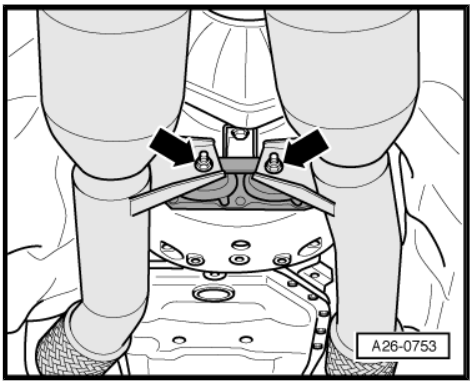

– Remove bolt -1- on bracket (right-side) for front exhaust pipe.

Note

Disregard -item 2-.

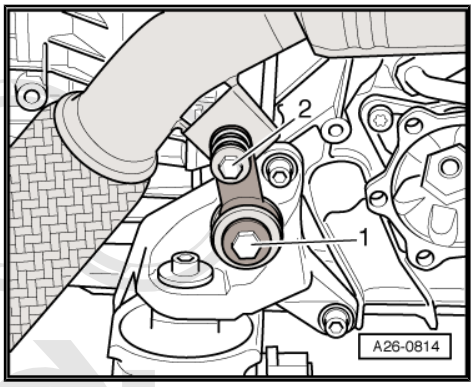

– Unscrew nuts -1 ... 3-.
– Detach front exhaust pipe (right-side) with catalytic converter.

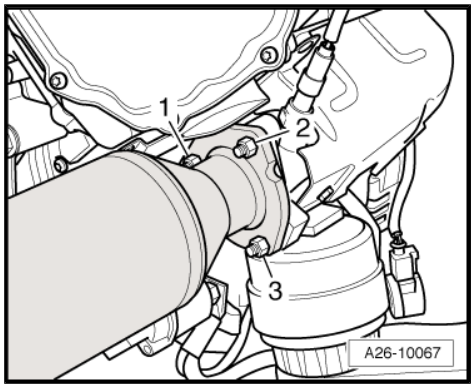

– Unplug electrical connector -1- at engine mounting (right-side).
– Move wiring clear at console for engine mounting.
– Remove bolts -arrows- and detach engine support (right-side).

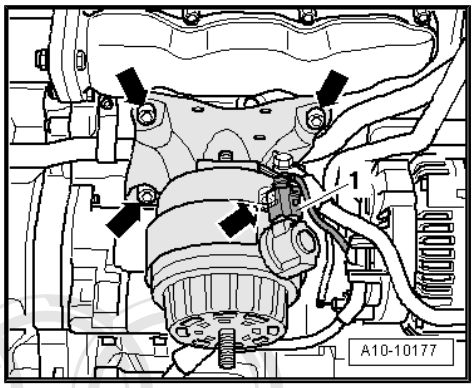

Note

Shown in illustration without console for engine mounting.

– Detach electrical wires -2- and -3- at starter.
– Remove bolts -1- and -4- and detach starter.

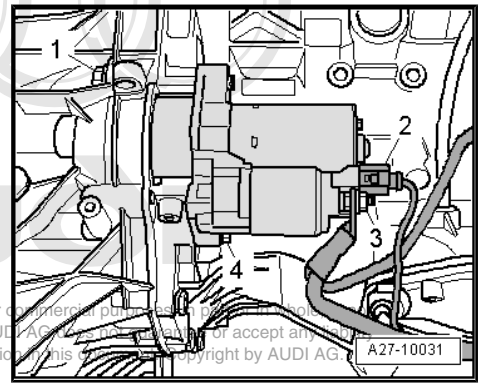

– Insert guide pin of adapter -T40058- with the larger-diameter section -arrow 1- pointing towards the engine. The smaller-diameter section -arrow 2- faces the adapter.

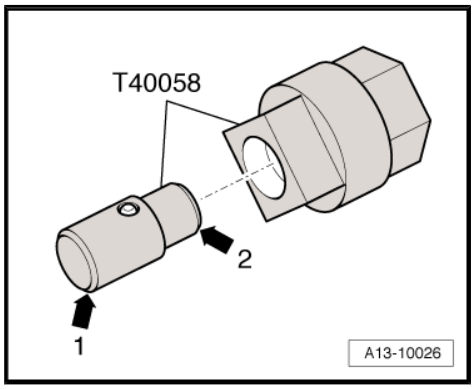

– When loosening torque converter bolts, counterhold crankshaft using adapter - T40058- .

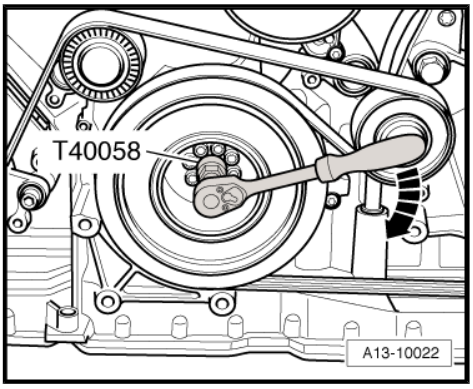

Note

Disregard -arrow-.

– Unscrew 3 bolts -arrows- for torque converter, working through opening of removed starter (turn crankshaft $^{1}/_{3}$ turn each time).

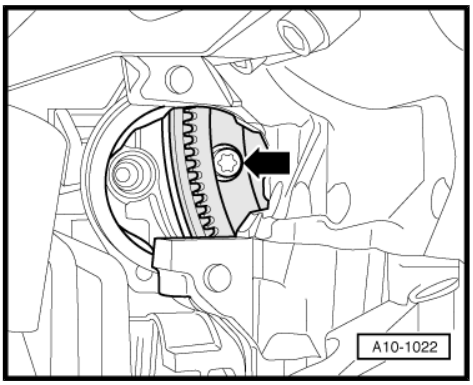

– Remove bolts -3 ... 10- securing gearbox to engine.

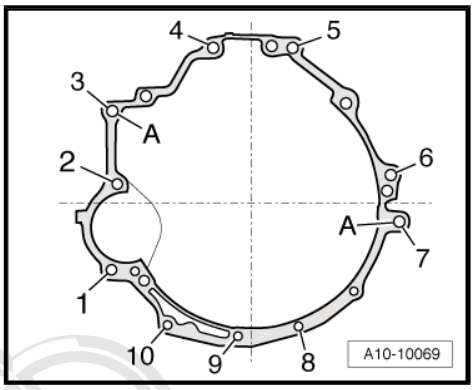

Note

Pay attention to ATF cooler.

– Loosen clamping bolts -1- on sides of scissor-type assembly platform - VAS 6131 A- and pull rear section of platform together with gearbox towards rear -arrow-.

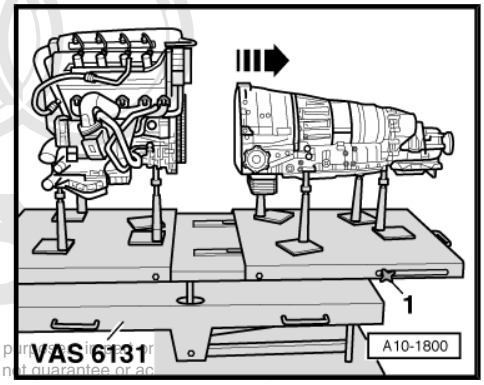

– Secure the torque converter in the gearbox using support bridge - 30 - 211 A- to prevent it falling out.

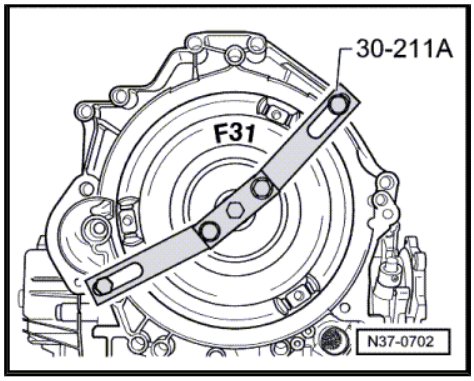

2.3 Installing engine

Note

- *Renew self-locking nuts and bolts when performing assembly work.*
- *Renew bolts which are tightened to a specified angle as well as seals, gaskets and O-rings.*
- *Secure all hose connections with the correct type of hose clips (same as original equipment) ⇒ Electronic parts catalogue .*
- *Fit all cable ties in the original positions when installing.*

Checking installation depth of torque converter

- If the torque converter has been correctly installed, the distance between the contact surfaces at the threaded holes in the torque converter and the contact surface on the torque converter bell housing (with automatic gearbox 09L) is at least 19 mm.

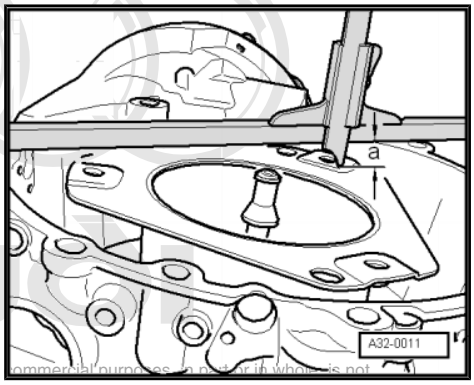

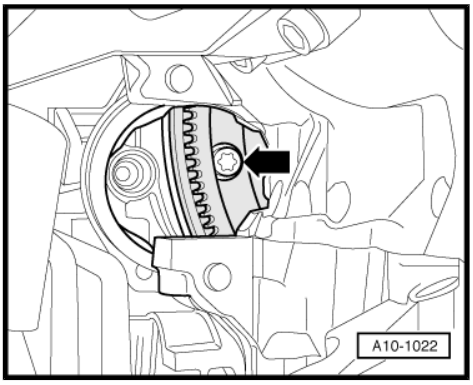

- Before bringing engine and gearbox together, turn torque converter and drive plate on engine so that the holes for one securing bolt are in line with the opening for the starter motor -arrow-.
- To secure torque converter on drive plate, use only new ribbed bolts of the correct type (same as original equipment) as specified in ⇒ Electronic parts catalogue .
- Check whether dowel sleeves for centring the engine/gearbox assembly are fitted in the cylinder block; install dowel sleeves if necessary.
- Press intermediate plate between engine and gearbox onto dowel sleeves.
- Bolt gearbox to engine.

Caution

- *Before and during tightening of bolts securing engine to gearbox, continually check that the torque converter behind the drive plate can be turned.*
- *If the torque converter cannot be turned, the drive lugs of the ATF pump and consequently the gearbox will be damaged when the bolts are finally tightened.*

Installation is carried out in the reverse order; note the following:

Note

- *Tightening torques apply only to lightly greased, oiled, phosphated or black-finished nuts and bolts.*
- *Additional lubricant such as engine oil or gearbox oil may be used, but do not use lubricant containing graphite.*
- *Do not use degreased parts.*
- *Tolerance for tightening torques: ± 15%.*

Securing engine to gearbox

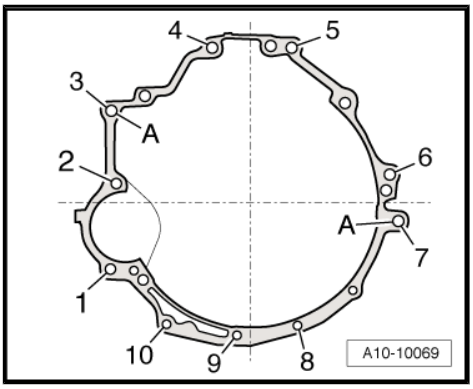

Item	Bolt	Nm
1	M10x100	65 1)
2, 6	M12x120	65
3, 4, 5	M12x105	65
7	M12x130	65
8, 9, 10	M10x80	45
A	Dowel sleeves for centralising	
• 1) Property class 10.9.		

Installation is carried out in the reverse order; note the following:

- Secure ATF lines ⇒ Rep. gr. 37 .
- Install front exhaust pipes together with catalytic converter: left-side ⇒ page 305 , right-side ⇒ page 309 .
- Prior to assembly, always use a thread tap to remove remaining locking fluid from the tapped holes in the flange shaft for the propshaft on the gearbox.

– Screw spindle for support element (left-side) at engine downwards.
– Unscrew base plate for support element (left-side) at scissor-type assembly platform - VAS 6131 A- .

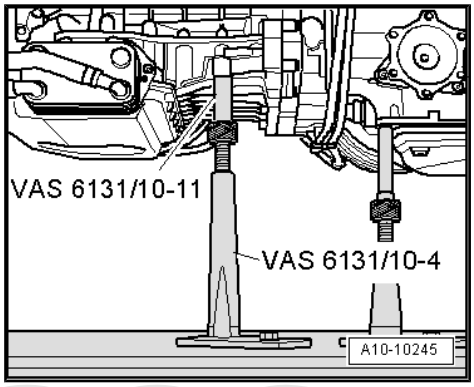

– Screw spindle for support element (right-side) at engine downwards.
– Unscrew base plates for support element (right-side) at scissor-type assembly platform - VAS 6131 A- .

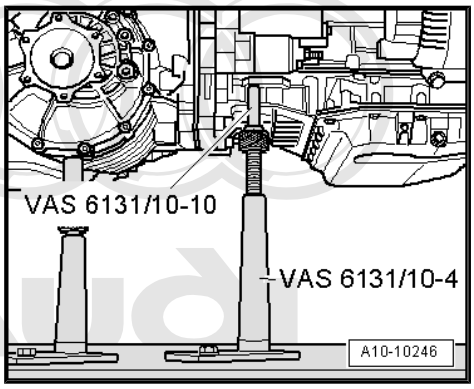

Note

The mounting points for engine (front), gearbox and tunnel cross member remain unchanged.

– Screw spindle for support element at left side of gearbox downwards as far as possible.
– Unscrew base plate for support element (left-side) from scissor-type assembly platform - VAS 6131 A- .

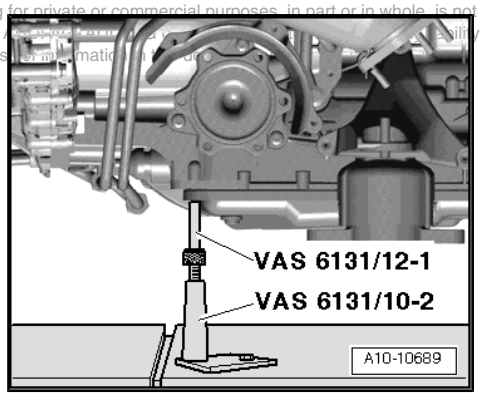

– Screw spindle for support element at right side of gearbox downwards as far as possible.
– Unscrew base plate for support element (right-side) from scissor-type assembly platform - VAS 6131 A- .

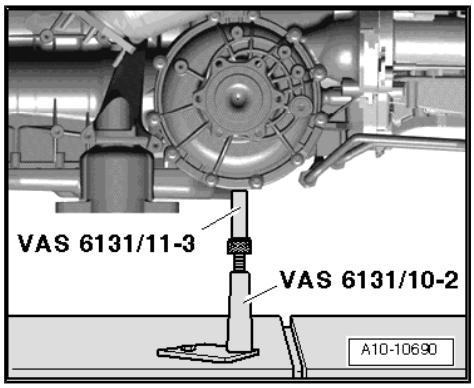

– Set up scissor-type assembly platform - VAS 6131 A- with support set for Audi - VAS 6131/10- as follows:

Platform coordinates	Parts from support set for Audi - VAS 6131/10-			
B4 1)	/10-1	/10-4	/10-5	/10-12
G4 1)	/10-1	/10-4	/10-5	/10-12
B7	/10-1	/10-2	/10-5	/10-7
G7	/10-1	/10-2	/10-5	/10-7
B10	/10-1	/10-2	/10-5	/10-8 2)
G10	/10-1	/10-2	/10-5	/10-8 2)
C14 1)	/10-1	/10-3	/10-5	/10-13
F14 1)	/10-1	/10-3	/10-5	/10-12
D17 1)	/13-6			/13-2
E17 1)	/13-6			/13-2

- 1) Support elements remain unchanged.
- 2) Secure support element only after installing the subframe.

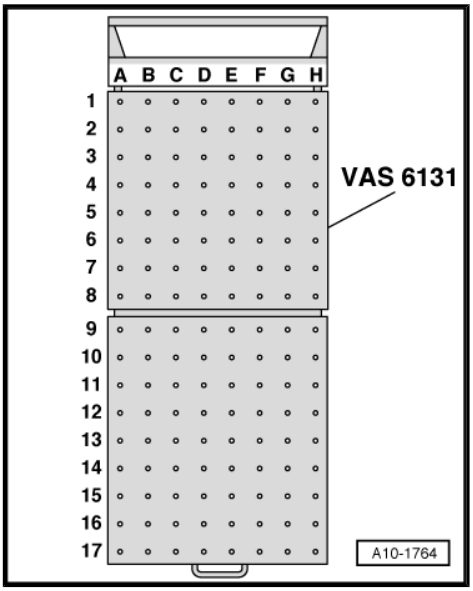

– Position engine cross member on the two support elements - VAS 6131/10-7- .

– Screw up spindles for support elements -VAS 6131/10-7- on both sides.

– Tighten base plates for support elements on scissor-type assembly platform - VAS 6131 A- to 20 Nm.

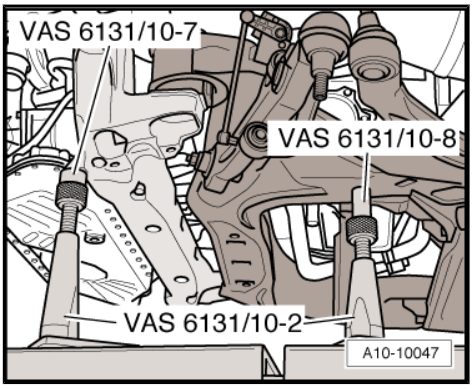

– Tighten bolts for engine mountings -arrows- on both sides.

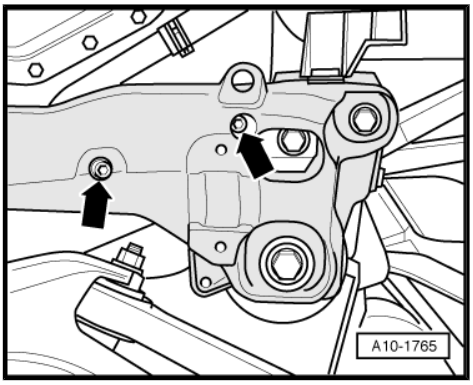

Note

A second mechanic is required for positioning the subframe on the support elements.

– Fit subframe onto the two support elements -VAS 6131/10-8- .
– Screw up spindles for support elements -VAS 6131/10-8- on both sides.
– Tighten base plates for support elements on scissor-type assembly platform - VAS 6131 A- to 20 Nm.

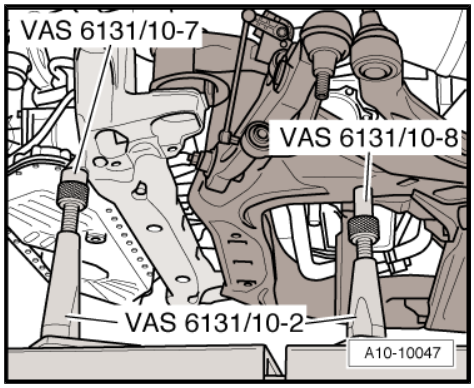

– Tighten bolts for gearbox mountings -arrows- on both sides.
– Attach electrical connector -1-.

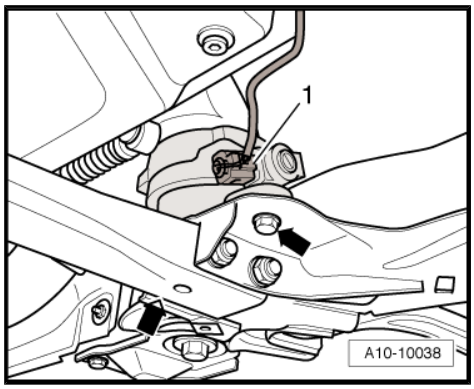

– Raise engine/gearbox assembly only until distance between subframe and body equals dimension -a-.
• Dimension -a- = 100 mm
– Attach selector lever cable to gearbox ⇒ Rep. gr. 37 .
– Guide engine/gearbox assembly together with subframe and engine cross member into the body from below using scissor-type assembly platform - VAS 6131 A- .
– Adjust the subframe and engine cross member according to the markings previously made on the longitudinal members.

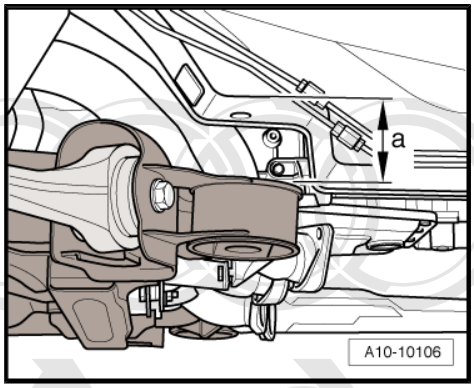

– Tighten subframe bolts only to specified torque (do not turn further); the bolts are only fully tightened after performing the wheel alignment check.

1 - 50 Nm
2 - 150 Nm
3 - 150 Nm

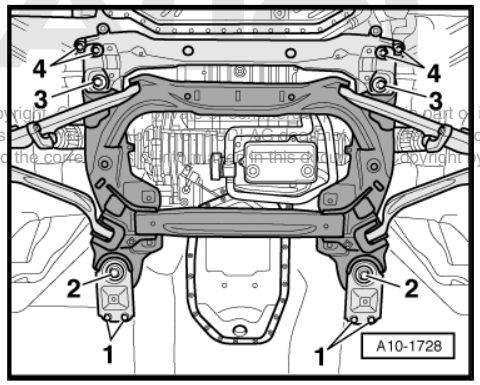

WARNING

The vehicle must not be driven at this stage.

– Tighten bolts -4- for engine cross member.

– Secure cross piece to lock carrier -arrows-.

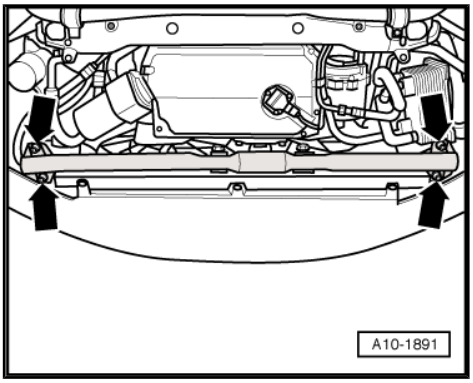

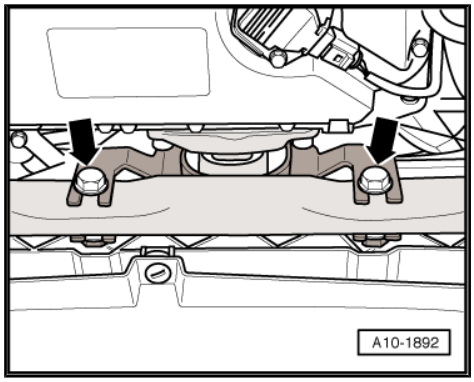

- Allow stop for torque reaction support to rest on rubber buffer for torque reaction support under its own weight and tighten bolts -arrows-.
- Secure ATF cooler ⇒ Rep. gr. 37 .
- Install drive shafts ⇒ Rep. gr. 40 .
- Install guide links, track control links, anti-roll bar and suspension struts ⇒ Rep. gr. 40 .
- Align exhaust system so it is free of stress ⇒ page 318 .
- Install cross piece (front) ⇒ Rep. gr. 50 .
- Install cross piece (front) for subframe ⇒ Rep. gr. 40 .
- Install air conditioner compressor ⇒ Rep. gr. 87 .
- Electrical connections and routing ⇒ Current flow diagrams, Electrical fault finding and Fitting locations.
- Observe notes on procedures required after connecting battery ⇒ Electrical system; Rep. gr. 27 .

Caution

Do not use a battery charger to boost starting. There is danger of damaging the vehicle's control units.

- Install and adjust wiper arms ⇒ Electrical system; Rep. gr. 92 .
- Check oil level ⇒ page 217 .
- Bleed fuel system ⇒ page 285 .

Note

Do not reuse coolant.

- Fill cooling system ⇒ page 224 .
- Top up power steering fluid and bleed steering system ⇒ Rep. gr. 48 .
- Check adjustment of selector lever cable and re-adjust if required ⇒ Rep. gr. 37 .
- Perform wheel alignment check ⇒ Rep. gr. 44 .

WARNING

Tighten bolts for subframe to final setting after performing wheel alignment check.

Tightening torques

Note

- *Tightening torques apply only to lightly greased, oiled, phosphated or black-finished nuts and bolts.*
- *Additional lubricant such as engine oil or gearbox oil may be used, but do not use lubricant containing graphite.*
- *Do not use degreased parts.*
- *Tolerance for tightening torques: ± 15 %.*

Component		Nm
Bolts/nuts	M6	9
	M8	20
	M10	40
	M12	65
Except for the following:		
Engine mounting to engine cross member		23
Engine cross member to longitudinal member		68
Gearbox mounting to subframe		23
Drive shaft heat shield to gearbox		23
Battery cable to fuse box		20
Fuel supply line to fuel rail		23
Hydraulic line to power steering pump		47
Torque reaction support to top section of sump		40
Cross piece to lock carrier		42
Stop for torque reaction support to lock carrier		65
Hose clips (9 mm wide)		3

3 Securing engine to engine and gearbox support

Special tools and workshop equipment required

- Lifting tackle - 2024 A-
- Engine and gearbox support - VAS 6095- with bracket - VAS 6095/1-5-
- Workshop hoist - VAS 6100-
- Lift arm extension (workshop hoist) - VAS 6101-

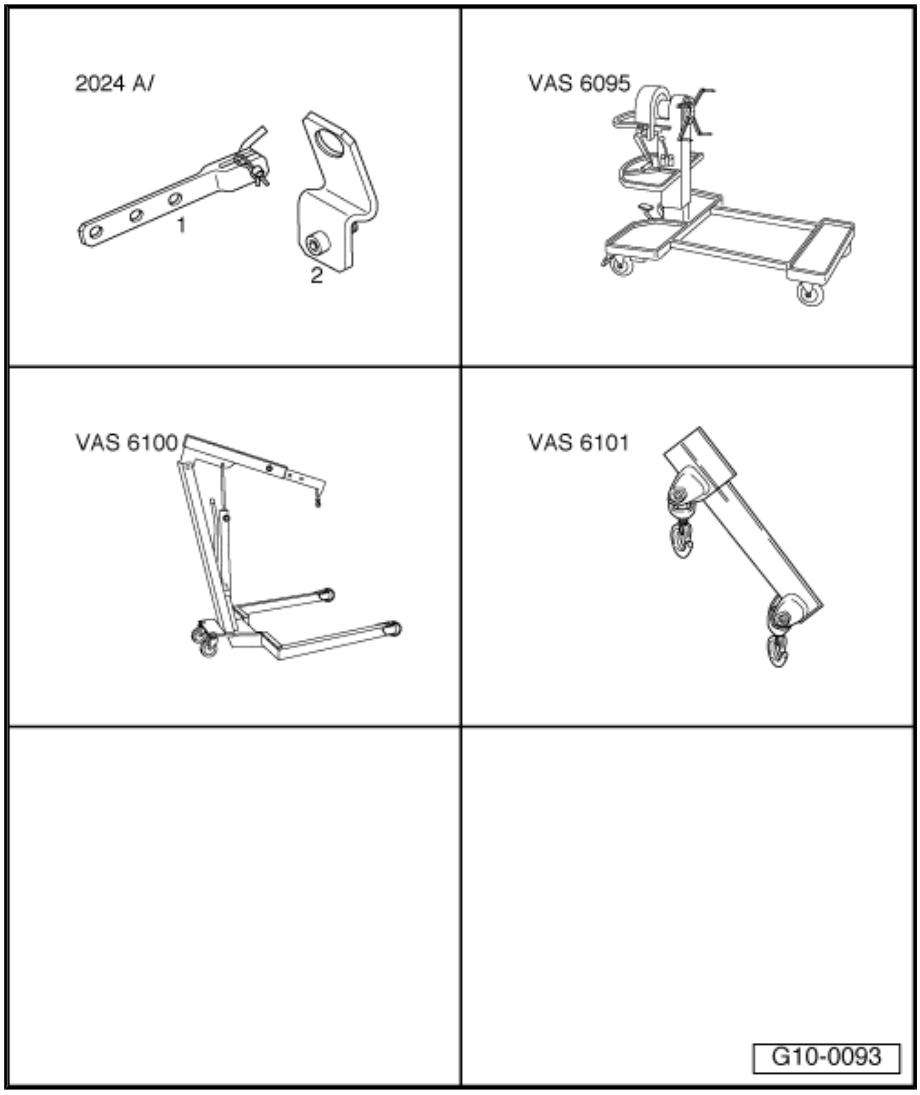

Procedure

- Engine detached from gearbox ⇒ page 26 or ⇒ page 58 .

– Attach the lifting tackle - 2024 A- to engine and workshop hoist - VAS 6100- with lift arm extension (workshop hoist) - VAS 6101- as shown in illustration.

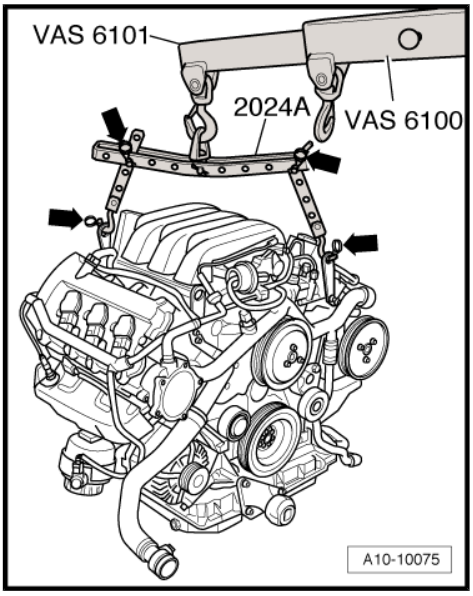

Note

To adjust to the centre of gravity of the assembly, the perforated rails of the support hooks must be positioned as shown.

WARNING

The support hooks and retaining pins on the lifting tackle must be secured with locking pins -arrows-.

– Unplug electrical connector -1- from engine mounting (left-side).

– Remove bolts -arrows- and detach engine support (left-side).

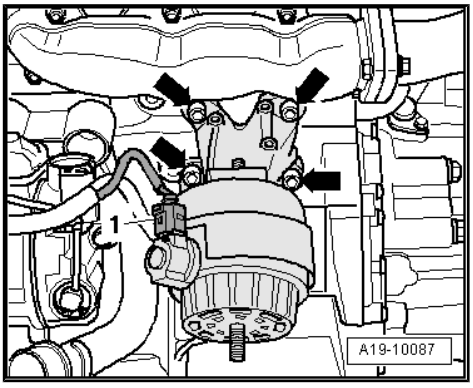

Note

Shown in illustration without console for engine mounting.

– Using bracket -VAS 6095/1-5- , secure engine to engine and gearbox support - VAS 6095- , as shown in illustration. Tightening torque: 40 Nm.

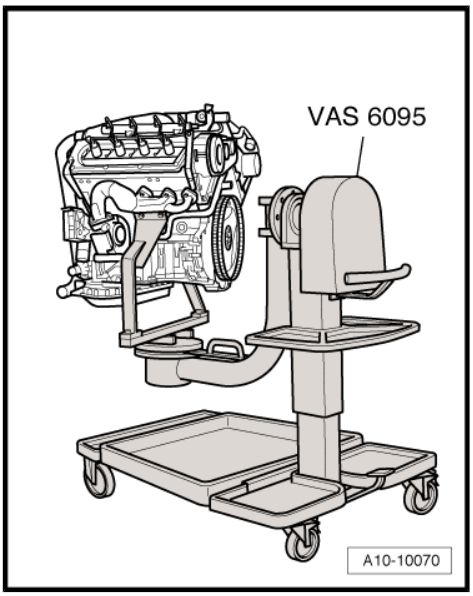

4 Assembly mountings

⇒ “4.1 Assembly mountings - exploded view”, page 76

⇒ “4.2 Removing and installing engine mounting (left and right)”, page 77

⇒ “4.3 Removing and installing torque reaction support”, page 81

4.1 Assembly mountings - exploded view

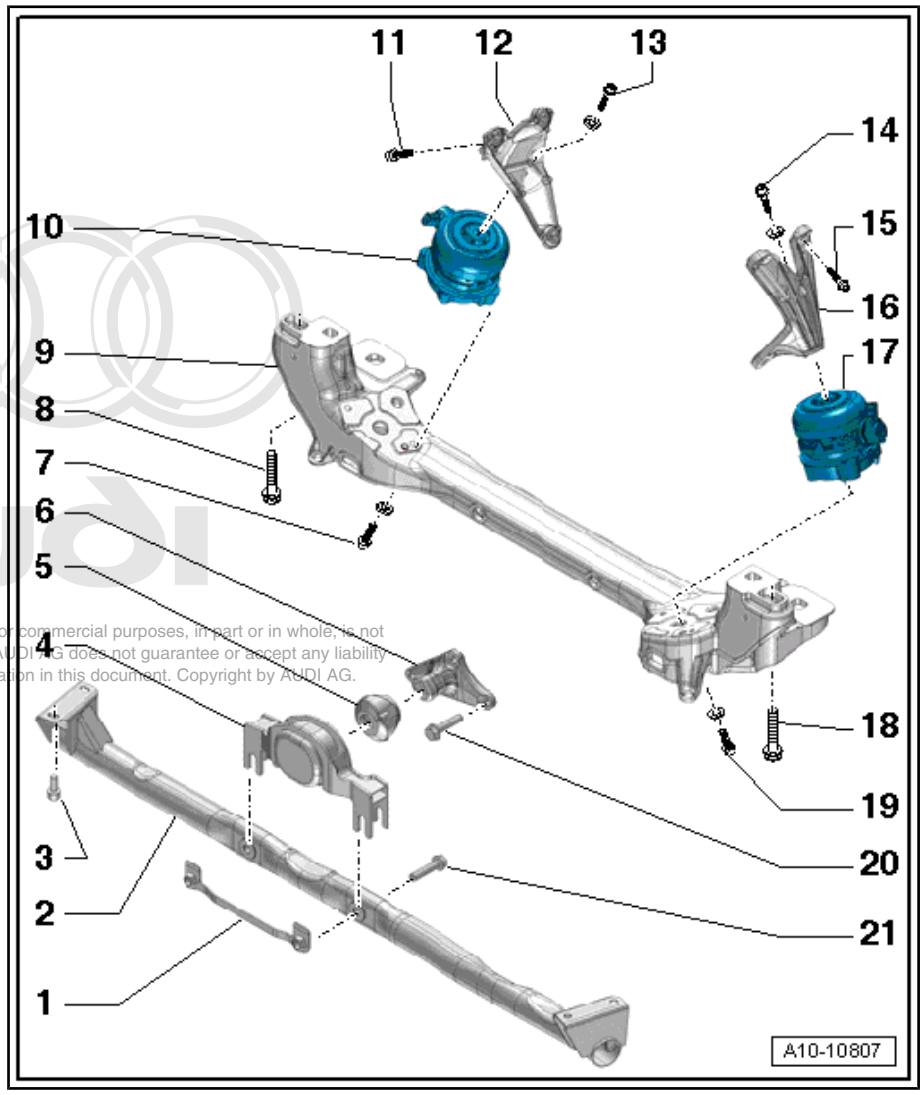

1 - Square nut

2 - Cross piece

3 - Bolt
- ❑ 40 Nm

4 - Stop for torque reaction support

5 - Rubber buffer for torque reaction support

6 - Torque reaction support
- ❑ Removing and installing ⇒ page 81

7 - Bolt
- ❑ 23 Nm

8 - Bolt
- ❑ 68 Nm

9 - Engine cross member

10 - Engine mounting (right-side)
- ❑ Removing and installing ⇒ page 77

11 - Bolt
- ❑ 40 Nm

12 - Engine support (right-side)
- ❑ Removing and installing ⇒ page 77

13 - Bolt
- ❑ 40 Nm

14 - Bolt
- ❑ 40 Nm

15 - Bolt
- ❑ 40 Nm

16 - Engine support (left-side)
- ❑ Removing and installing ⇒ page 77

17 - Engine mounting (left-side)
- ❑ Removing and installing ⇒ page 77

18 - Bolt
- ❑ 68 Nm

19 - Bolt

- ❑ 23 Nm

20 - Bolt

- ❑ 40 Nm

21 - Bolt

- ❑ 65 Nm

4.2 Removing and installing engine mounting (left and right)

Special tools and workshop equipment required

- Support bracket - 10 - 222 A-

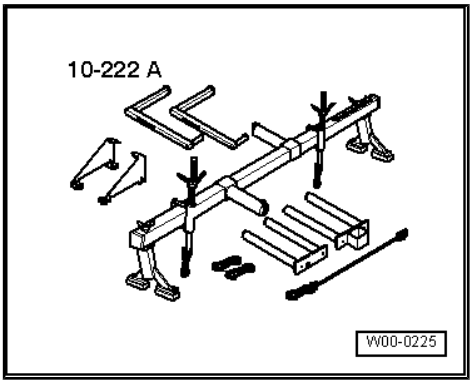

- Adapters - 10 - 222 A /21-

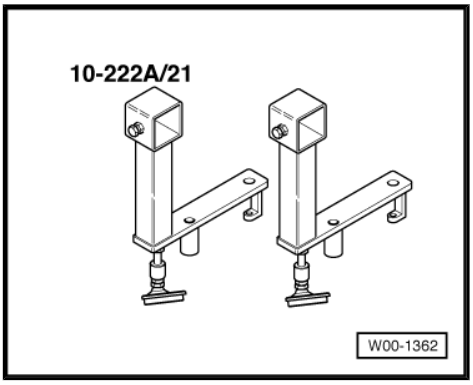

- Engine support bracket (supplementary set) - T40093-

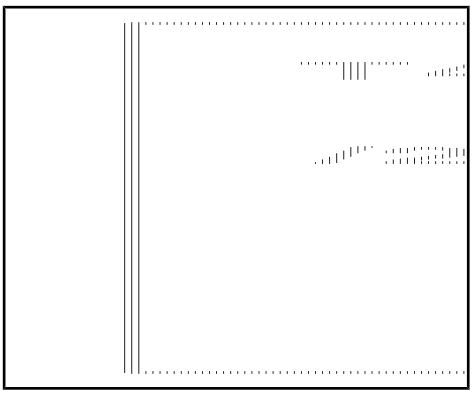

Removing

– Remove rear engine cover panel -arrows-.

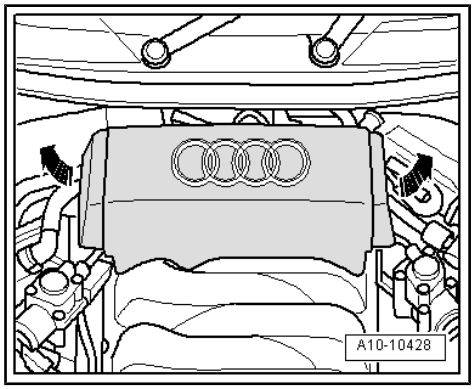

– Pull off seal -1- and remove plenum chamber covers -2- and -3-.

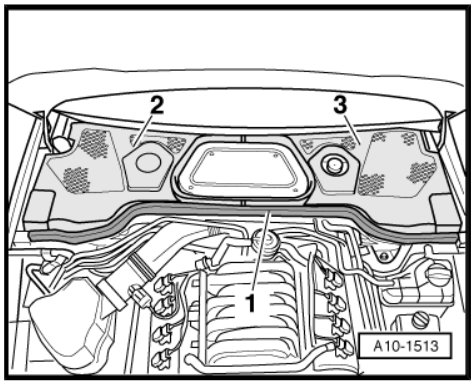

– Remove rear bolts -3- for body brace.

– Attach adapter - 10 - 222 A /21- without adapter - 10 - 222 A / 4- onto suspension turrets.

• Supports are marked for left and right side of vehicle.

• The centre resting point -2- of supports is positioned on front bolts for body brace.

• The adapters - 10 - 222 A /21- are attached by means of the rear bolts -3- for the body brace.

• The knurled screw -1- must be screwed down until support plate rests on suspension turret.

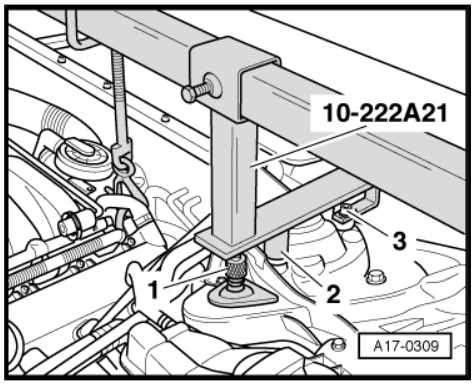

– Attach adapter - 10 - 222 A /4- with adapters -T40093/6- to adapters -10 - 222 A /21- .

– Attach spindles -10 - 222 A /11- to engine lifting eyes.

– Partly take up weight of engine with spindles of support bracket.

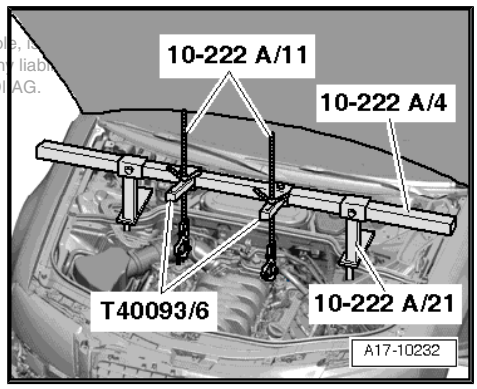

– Release quick-release fasteners -1- and remove bolts (if fitted) to remove front noise insulation.

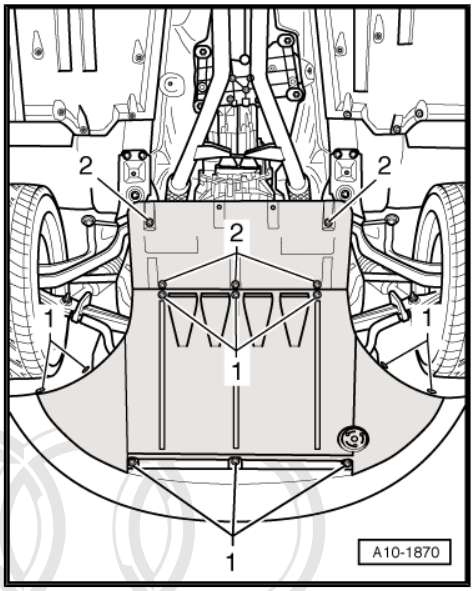

– Remove bolts -1- and -2- on both sides and slightly lower anti-roll bar.

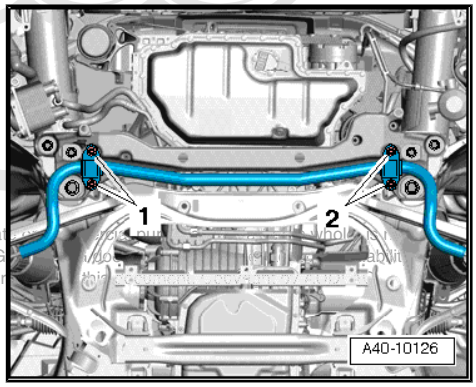

– Remove bolts -3- and -4-.

Note

Disregard -items 1 and 2-.

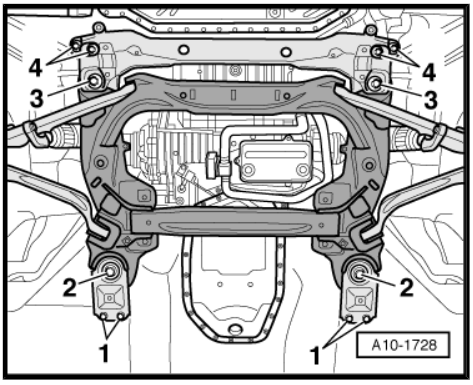

– Remove bolts for engine mountings -arrows- (left and right).
– Detach engine cross member.

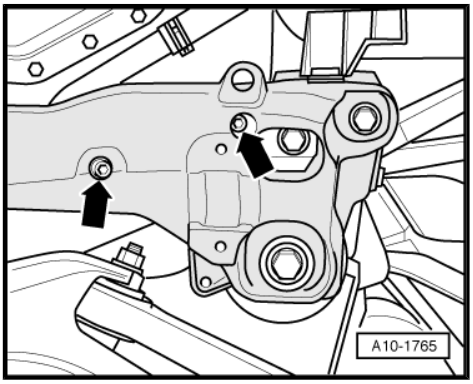

Engine mounting (left-side):

– Unplug electrical connector -1- on left electrohydraulic engine mounting solenoid valve - N144- .

– Remove bolts -arrows- and detach engine support with engine mounting (left-side).

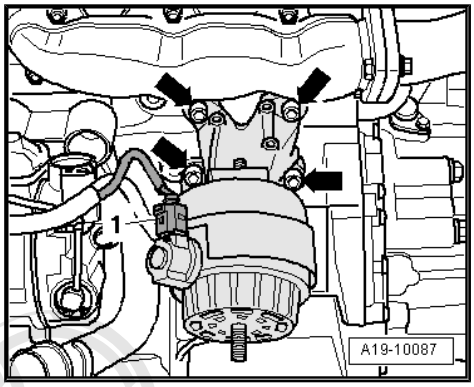

Engine mounting (right-side):

– Unplug electrical connector -1- on right electrohydraulic engine mounting solenoid valve - N145- .

– Remove bolts -arrows- and detach engine support with engine mounting (right-side).

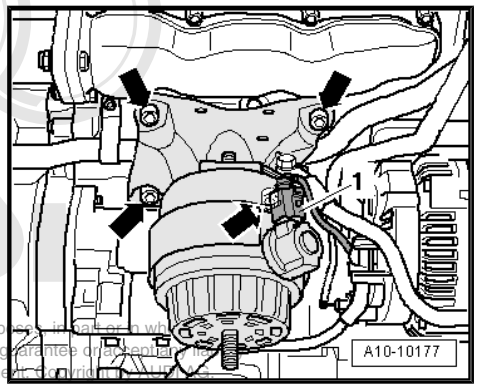

Continuation for both sides:

– Remove bolt -arrow- and detach engine mounting from engine support.

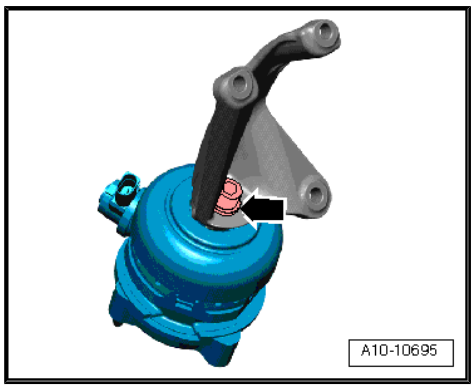

Installing

- Tightening torques ⇒ page 76

Installation is carried out in the reverse order; note the following:

Note

♦ *Renew the bolts tightened with specified tightening angle.*

♦ *Fit all cable ties in the original positions when installing.*

– Install subframe ⇒ Rep. gr. 40 .

– Install anti-roll bar ⇒ Rep. gr. 40 .

– Install body brace ⇒ Rep. gr. 40 .

– Install noise insulation ⇒ Rep. gr. 66 .

4.3 Removing and installing torque reaction support

Removing

– Release quick-release fasteners -1- and remove bolts (if fitted) to remove front noise insulation.

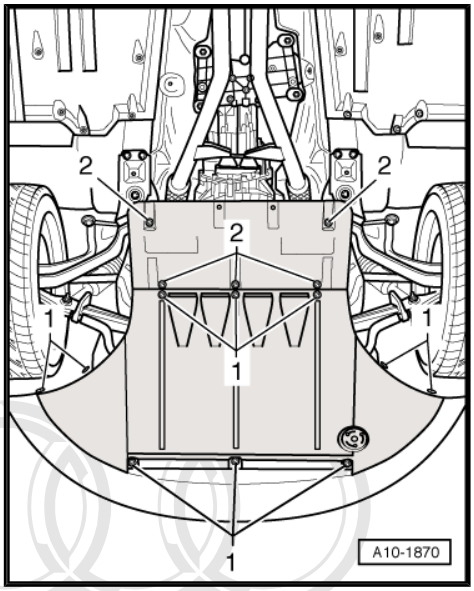

– Slacken bolts -arrows- on stop for torque reaction support.

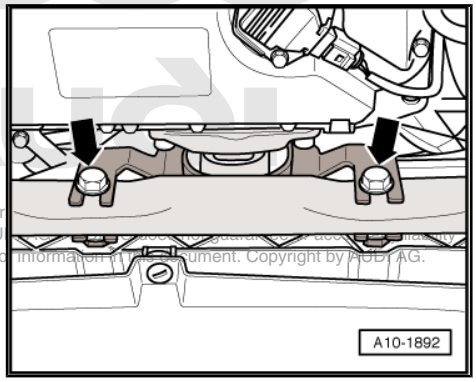

– Remove bolts -arrows- and detach cross piece from lock carrier.

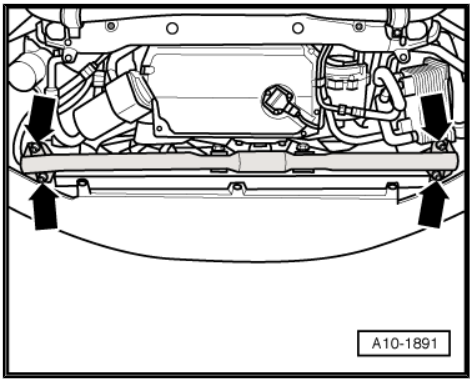

– Remove bolts -arrows- and detach torque reaction support.

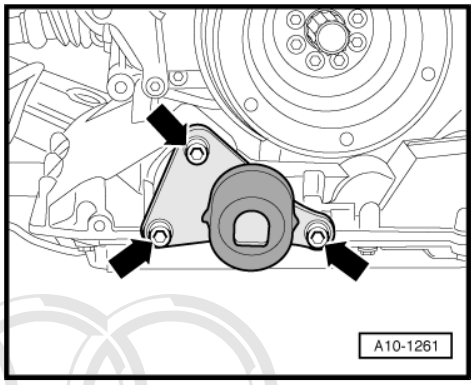

Installing

- Tightening torques ⇒ page 76

Installation is carried out in the reverse order; note the following:

– Tighten bolts -arrows- securing cross piece to lock carrier.

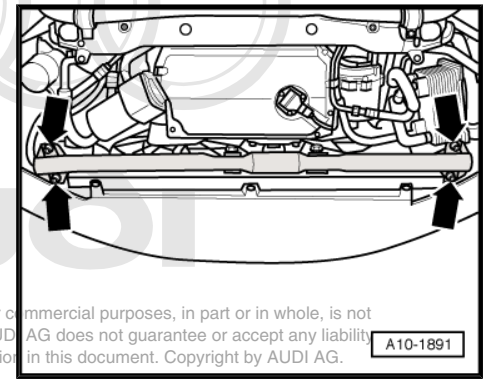

– Allow stop for torque reaction support to rest on rubber buffer for torque reaction support under its own weight and tighten bolts -arrows-.

– Install noise insulation panels ⇒ Rep. gr. 66 .

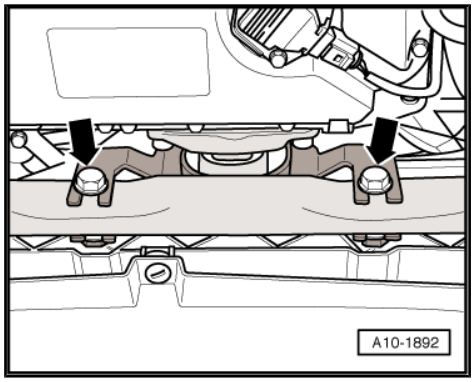

13 – Crankshaft group

1 Servicing work on pulley end

1.1 Poly V-belt drive - exploded view

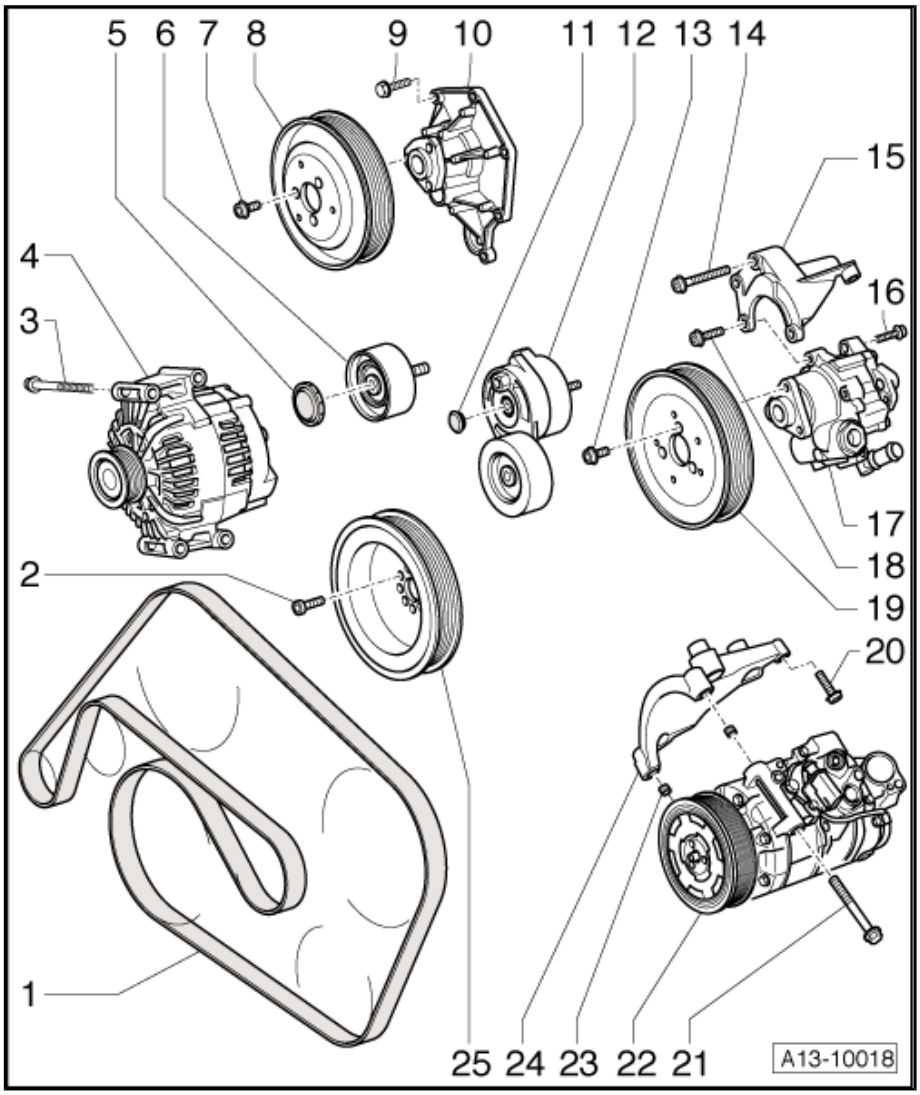

1 - Poly V-belt

- ❑ Check for wear
- ❑ Before removing, mark direction of rotation with chalk or felt-tip pen. If the belt runs in the opposite direction when it is refitted, this can cause breakage.
- ❑ Removing and installing ⇒ page 87
- ❑ When installing, make sure it is properly seated on pulleys.

2 - 20 Nm + 90° (1/4 turn) further

- ❑ Renew

3 - 22 Nm

4 - Alternator

- ❑ Removing and installing ⇒ Electrical system; Rep. gr. 27

5 - Cover cap for idler roller

6 - Idler roller for poly V-belt

- ❑ Tighten to 40 Nm

7 - 20 Nm

8 - Poly V-belt pulley for coolant pump

- ❑ Removing and installing ⇒ page 84

9 - 9 Nm

10 - Coolant pump

- ❑ Removing and installing ⇒ page 229

11 - Cover cap for tensioner

12 - Poly V-belt tensioner

- ❑ Tighten to 40 Nm

13 - 20 Nm

14 - 20 Nm

15 - Bracket for power steering pump

16 - 20 Nm

17 - Power steering pump

- ❑ Removing and installing ⇒ Rep. gr. 48

18 - 20 Nm

19 - Poly V-belt pulley for power steering pump

- ❑ Removing and installing ⇒ page 85

20 - 20 Nm

21 - 25 Nm

22 - Air conditioner compressor

- ❑ Do not unscrew or disconnect refrigerant hoses or pipes.
- ❑ Removing and installing ⇒ Rep. gr. 87
- ❑ Pay attention to dowel sleeves ⇒ Item 23 (page 84) when installing

23 - Dowel sleeve

- ❑ 2x

24 - Bracket for air conditioner compressor

- ❑ Pay attention to dowel sleeves ⇒ Item 23 (page 84) when installing

25 - Vibration damper

- ❑ With pulley for poly V-belt
- ❑ Removing and installing ⇒ page 88

1.2 Removing and installing coolant pump pulley

Special tools and workshop equipment required

- ♦ Pin wrench - 3212-

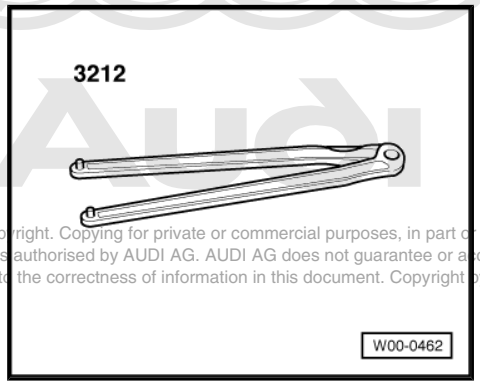

Removing

– Pull off engine cover panel (front) -arrows-.

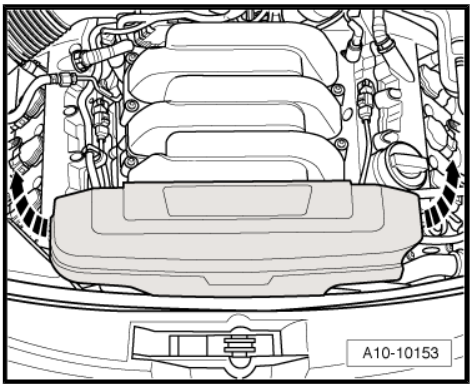

– Remove engine compartment seal from lock carrier and wing panel flanges.
– Turn the tensioner in the direction of the -arrow- to slacken the poly V-belt.
– Remove poly V-belt from coolant pump pulley.
– Release pressure from the tensioner.

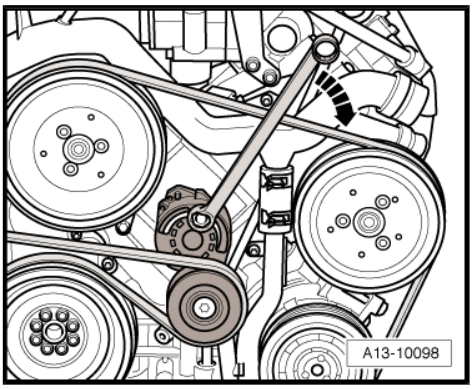

– Slacken bolts for coolant pump pulley (counterhold with pin wrench - 3212-).
– Remove bolts and take off poly V-belt pulley.

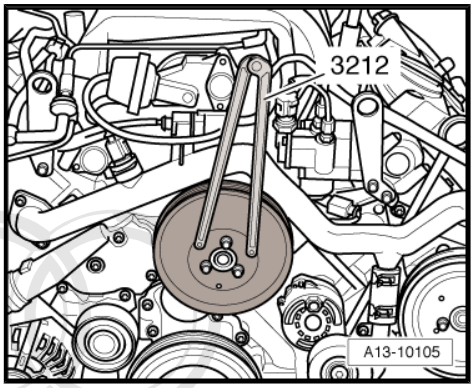

Installing

Installation is carried out in the reverse order; note the following:

Note

When installing poly V-belt, make sure it is properly seated on pulleys.

– Start engine and check that belt runs properly.

Tightening torque

Component	Nm
Poly V-belt pulley to coolant pump	20

1.3 Removing and installing power steering pump pulley

Special tools and workshop equipment required

♦ Pin wrench - 3212-

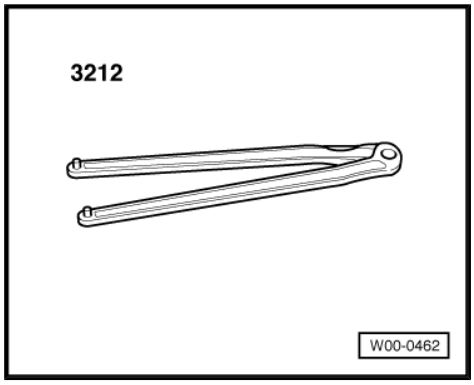

Removing

– Pull off engine cover panel (front) -arrows-.

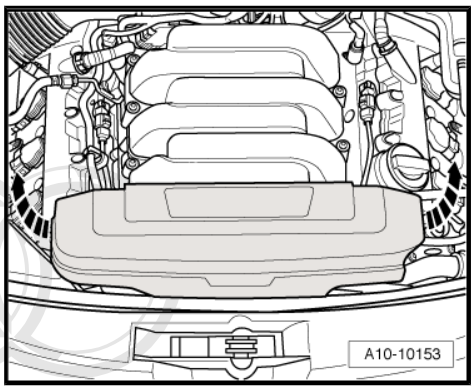

– Remove engine compartment seal from lock carrier and wing panel flanges.
– Turn the tensioner in the direction of the -arrow- to slacken the poly V-belt.
– Remove poly V-belt from power steering pump pulley.
– Release pressure from the tensioner.

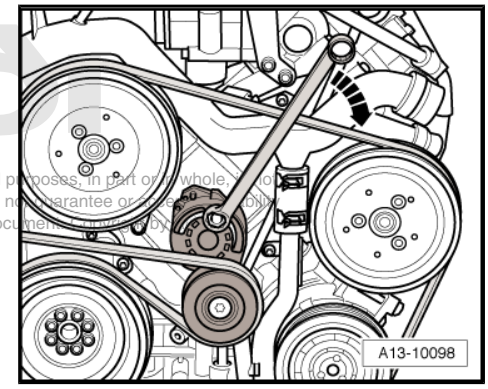

– Loosen bolts for power steering pump pulley (counterhold with pin wrench - 3212-).

– Remove bolts and take off poly V-belt pulley.

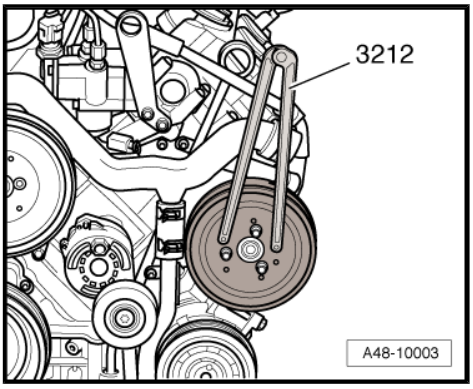

Installing

Installation is carried out in the reverse order; note the following:

- Installation position: marking “vorne” (front) faces in direction of travel.

Note

When installing poly V-belt, make sure it is properly seated on pulleys.

– Start engine and check that belt runs properly.

Tightening torque

Component	Nm
Poly V-belt pulley to power steering pump	20

1.4 Removing and installing poly V-belt

Removing

– Pull off engine cover panel (front) -arrows-.

– Remove engine compartment seal from lock carrier and wing panel flanges.

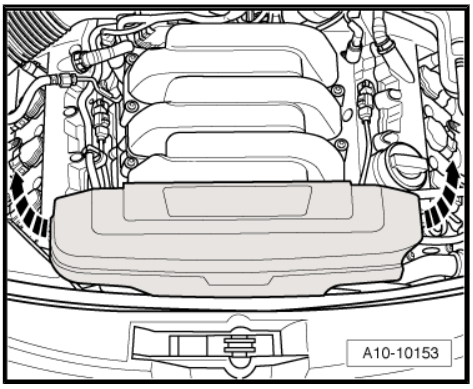

Note

Before removing, mark direction of rotation of poly V-belt with chalk or felt-tip pen. If the belt runs in the opposite direction when it is refitted, this can cause breakage.

– Turn the tensioner in the direction of the -arrow- to slacken the poly V-belt.

– Remove poly V-belt and release pressure from the tensioner.

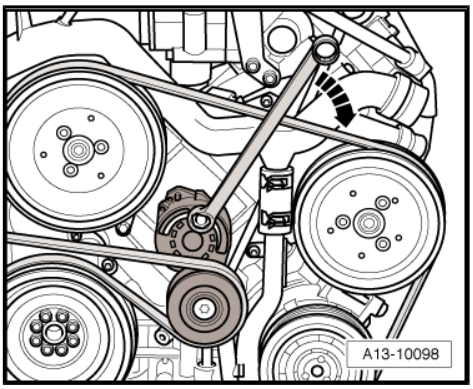

Installing

Installation is carried out in the reverse order; note the following:

– Fit poly V-belt onto pulleys as shown in illustration.

1. Alternator
2. Idler roller
3. Coolant pump
4. Power steering pump
5. Air conditioner compressor
6. Tensioner for poly V-belt
7. Crankshaft

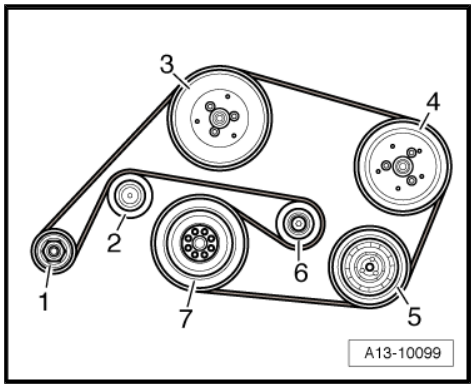

Note

When installing poly V-belt, make sure it is properly seated on pulleys.

– Start engine and check that belt runs properly.

1.5 Removing and installing vibration damper

Removing

– Pull off engine cover panel (front) -arrows-.

– Remove engine compartment seal from lock carrier and wing panel flanges.

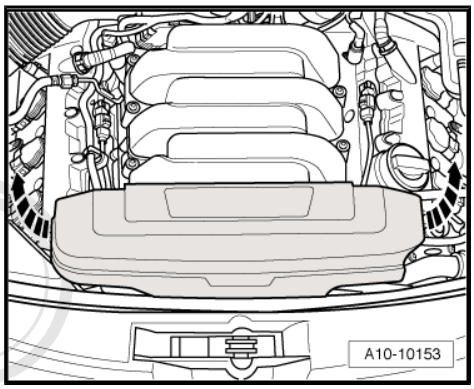

Note

Before removing, mark direction of rotation of poly V-belt with chalk or felt-tip pen. If the belt runs in the opposite direction when it is refitted, this can cause breakage.

– Turn the tensioner in the direction of the -arrow- to slacken the poly V-belt.

– Remove poly V-belt and release pressure from the tensioner.

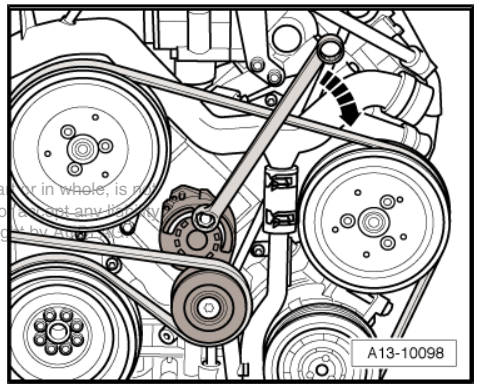

– If fitted, remove bolts -arrows- securing exhaust pipe for auxiliary/additional heater to noise insulation.

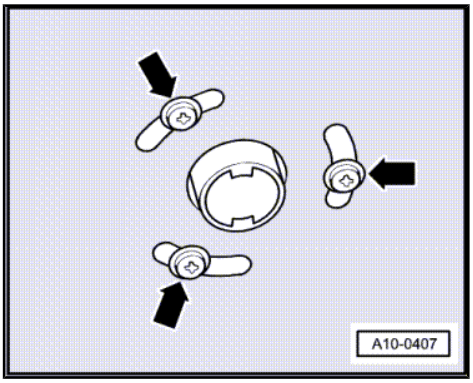

– Open quick-release fasteners -1- and remove noise insulation (front). Leave rear noise insulation in position.

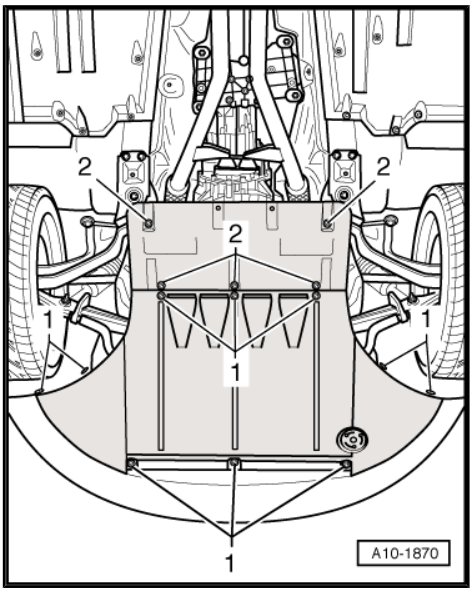

– Unbolt cross piece at lock carrier -arrows-.

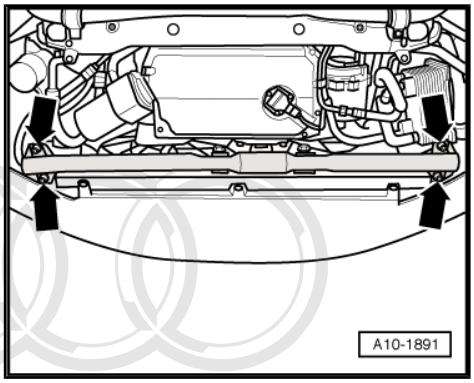

– Unscrew bolts -arrows- and remove cross piece from stop for torque reaction support.

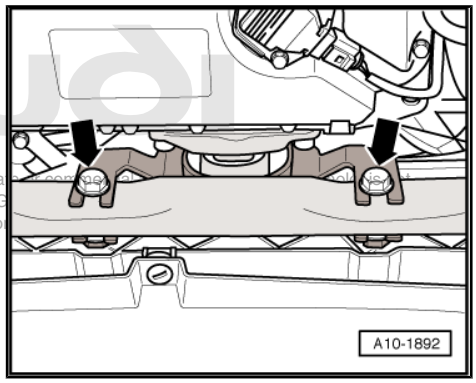

– Unscrew bolts -arrows- and remove torque reaction support together with stop for torque reaction support.

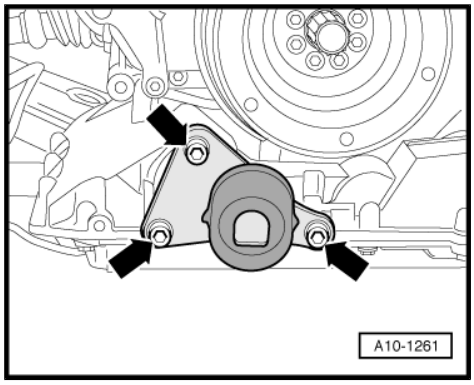

– Mark position of vibration damper for re-installation.
– Remove bolts -1-.
– Remove vibration damper.

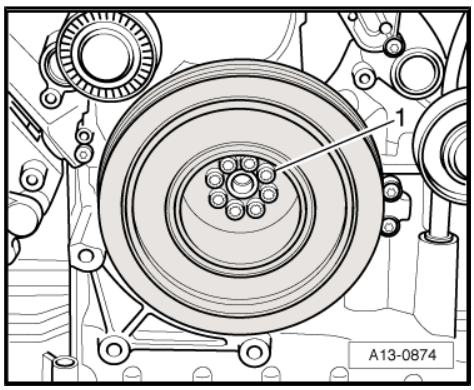

Installing

Installation is carried out in the reverse order; note the following:

– Fit torque reaction support together with stop for torque reaction support and tighten bolts -arrows-.
– Install poly V-belt ⇒ page 87 .

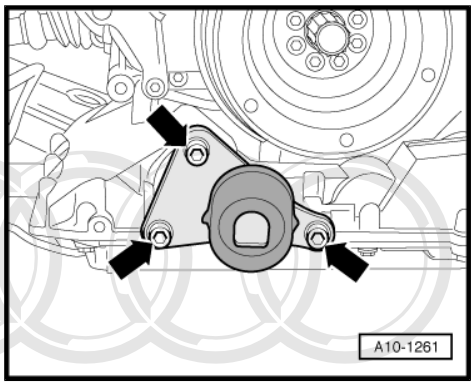

Tightening torques

Component	Nm
Vibration damper to crankshaft	20 + 90° 1)2)
Torque reaction support to top section of sump	40
Cross piece to lock carrier	42
Stop for torque reaction support to cross piece	65

- 1) Renew bolts.
- 2) 90° = one quarter turn.

1.6 Renewing sealing flange (pulley end) with crankshaft oil seal

Special tools and workshop equipment required

- Pin wrench - 3212-

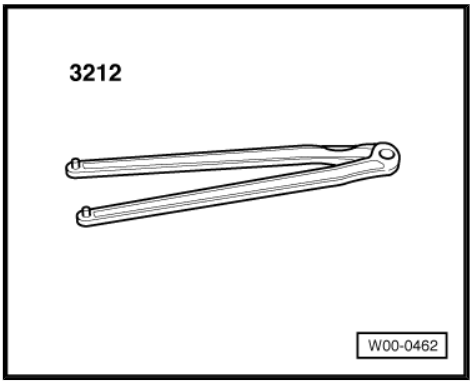

- Assembly tool - T40048-

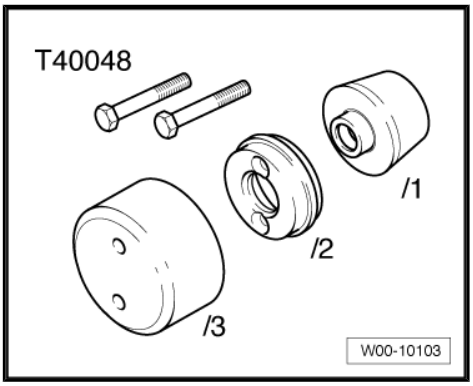

- Electric drill with plastic brush attachment
- Safety goggles
- Sealant ⇒ Electronic parts catalogue

Procedure

– Remove vibration damper ⇒ page 88 .

– Slacken bolts for coolant pump pulley (counterhold with pin wrench - 3212-).

– Remove bolts and take off coolant pump pulley.

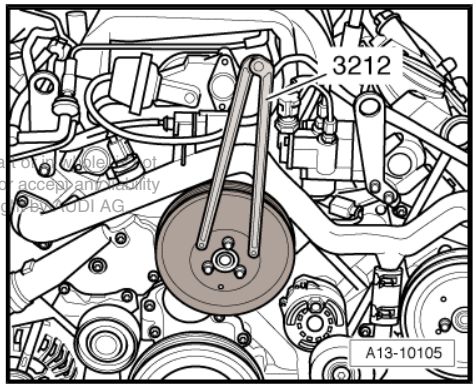

– Remove bolts -arrows-.
– Remove sealing flange (pulley end).

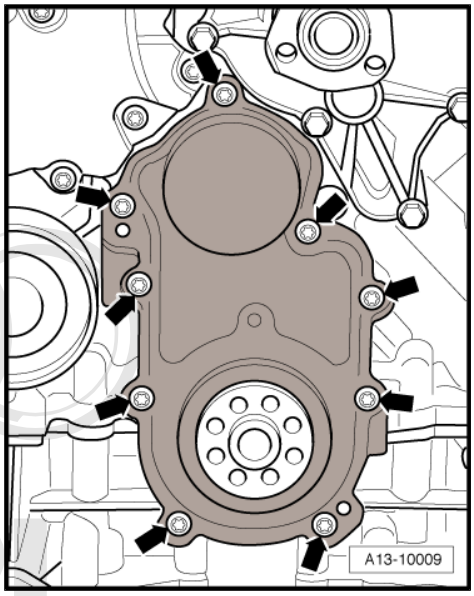

Note

Renew sealing flange (pulley end).

– Remove old sealant from sealing surfaces.

Caution

Make sure that no sealant residue gets into the engine.

WARNING

Wear safety goggles.

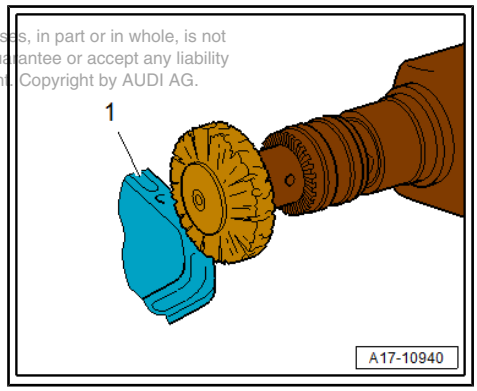

– Remove remaining sealant from sealing flange and cylinder block/sump (top section) with rotating plastic brush or similar.
– Clean sealing surfaces; they must be free of oil and grease.

– Cut off tube nozzle at front marking (diameter of nozzle approx. 2 mm).

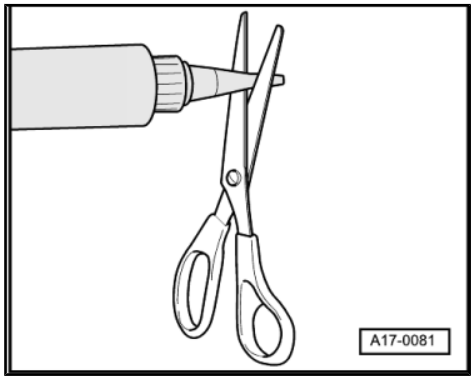

– Apply bead of sealant onto clean sealing surface of sealing flange as illustrated.

• The groove -arrow- on the sealing surface must be completely filled with sealant.

• The bead of sealant must project 1.5 … 2.0 mm above the sealing surface.

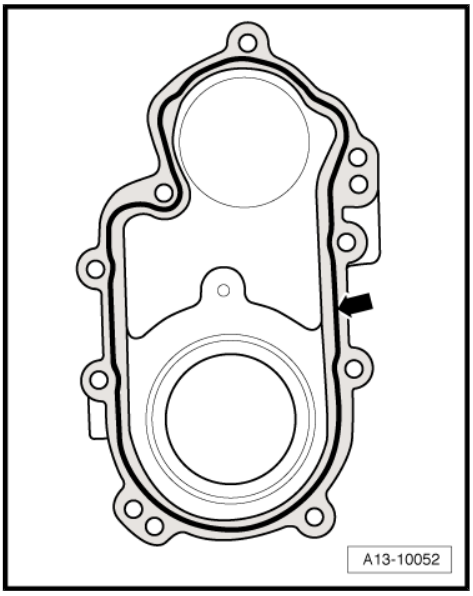

Note

♦ *The sealant bead must not be thicker than specified, otherwise excess sealant could enter the sump and clog the strainer in the oil pump.*

♦ *The sealing flange (pulley end) must be installed within 5 minutes after applying silicone sealant.*

– Fit assembly aid - T40048/1- onto assembly sleeve - T40048/2- and slide sealing flange -1- onto assembly sleeve.

– Take off assembly aid.

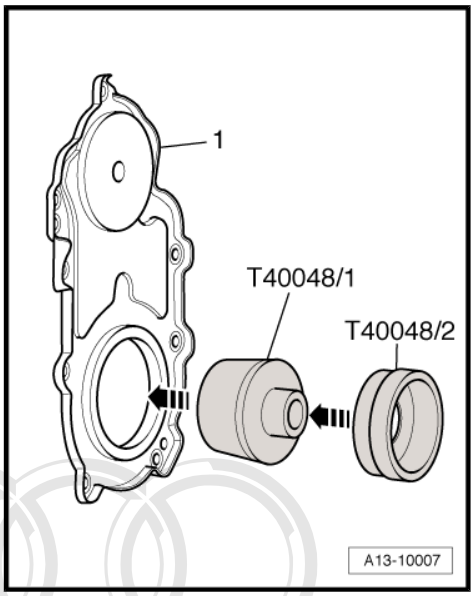

– First position sealing flange (with assembly sleeve - T40048/2- inserted) on crankshaft.

– Keep sealing flange straight while pushing it onto engine sealing surface. Then bolt on.

Remaining installation steps are carried out in reverse sequence; note the following:

– Install vibration damper ⇒ page 90 .

– Install poly V-belt ⇒ page 87 .

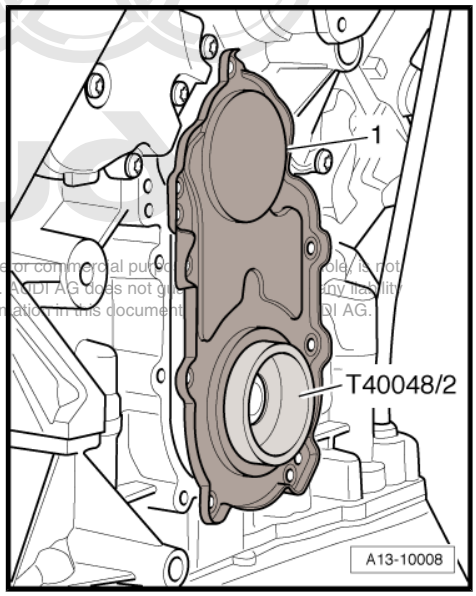

Tightening torque

Component	Nm
Sealing flange (pulley end) to cylinder block	9 [1]
• [1] Tighten in stages and in diagonal sequence	

2 Servicing work on timing chain end

2.1 Flywheel for vehicles with multitronic gearbox - exploded view

1 - Damper unit
- ❑ Removing and installing ⇒ page 94

2 - 22 Nm

3 - Flywheel
- ❑ Removing and installing ⇒ page 95

4 - Crankshaft

5 - Crankshaft oil seal (timing chain end)
- ❑ Renewing ⇒ page 98

6 - 60 Nm + 90° (1/4 turn) further
- ❑ Renew

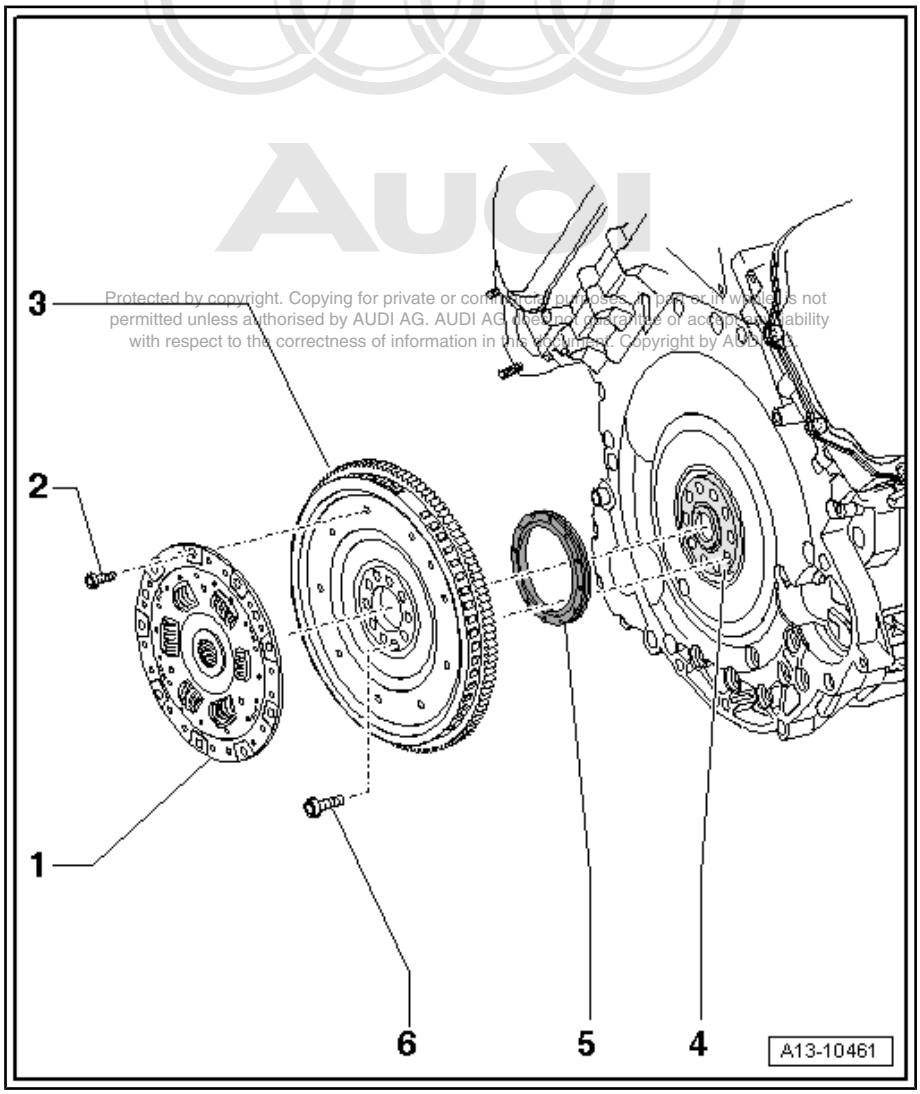

2.2 Removing and installing damper unit

Special tools and workshop equipment required

♦ Counterhold tool - 10 - 201-

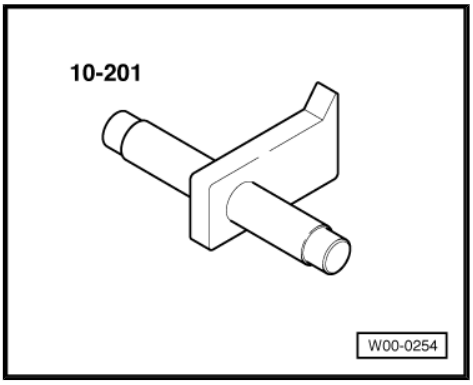

Removing

– Remove multitronic gearbox ⇒ Rep. gr. 37 .

– Attach counterhold tool - 10 - 201- in order to loosen bolts -arrows-.

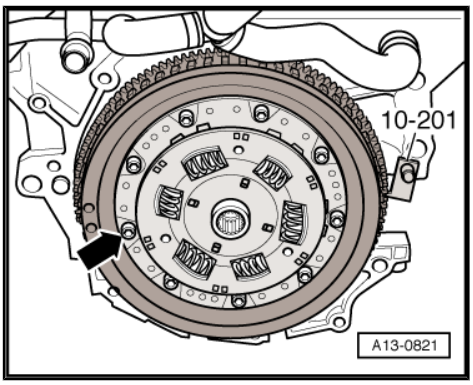

– Unscrew bolts -1- and remove damper unit -A- from flywheel -B-.

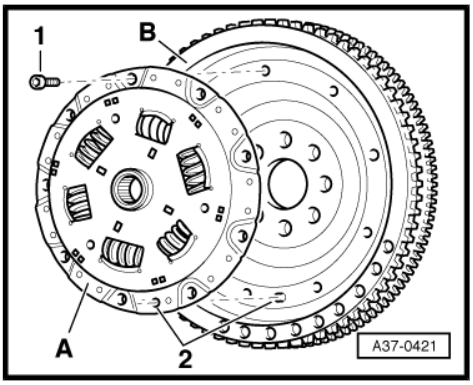

Installing

Installation is carried out in the reverse order; note the following:

Note

The part number of the damper unit is assigned to the gearbox code letters; for correct allocation refer to ⇒ Electronic parts catalogue .

– Align the damper unit -A- and flywheel -B-.

• The two lugs -2- must align.

– Fit bolts -1- hand-tight and tighten in diagonal sequence.

– Install multitronic gearbox ⇒ Rep. gr. 37 .

Tightening torque

Component	Nm
Damper unit to flywheel	22

2.3 Removing and installing flywheel - vehicles with multitronic gearbox

Special tools and workshop equipment required

♦ Counterhold tool - 10 - 201-

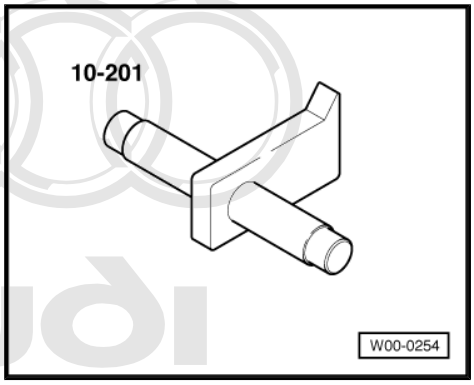

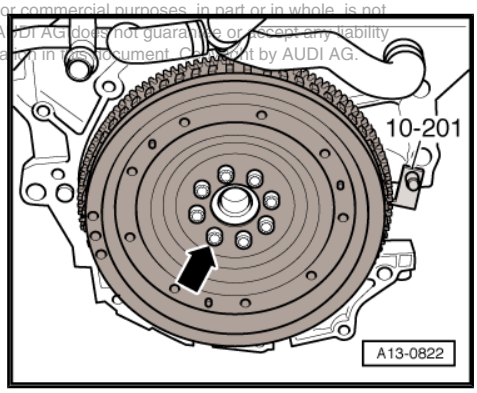

Removing

– Remove multitronic gearbox ⇒ Rep. gr. 37 .
– Remove damper unit ⇒ page 94 .
– Mark installation position of flywheel on engine -arrow-.
– Attach counterhold tool - 10 - 201- in order to loosen bolts.
– Unbolt flywheel.

Installing

Installation is carried out in the reverse order; note the following:

– Use new securing bolts.
– Reverse position of counterhold tool - 10 - 201- in order to tighten bolts.
– Install damper unit ⇒ page 94 .
– Install gearbox ⇒ Rep. gr. 37 .

Tightening torque

Component	Nm
Flywheel to crankshaft	60 + 90° 1)2)
• 1) Renew bolts. • 2) 90° = one quarter turn.	

2.4 Drive plate on vehicles with automatic gearbox 09L - exploded view

1 - Drive plate
- ❑ Removing and installing ⇒ page 97

2 - Washer

3 - 60 Nm + 90° ($^1/_4$ turn) further
- ❑ Renew

4 - Centralising disc
- ❑ Installation position ⇒ page 98

5 - Crankshaft

6 - Crankshaft oil seal (gearbox end)
- ❑ Renewing ⇒ page 98

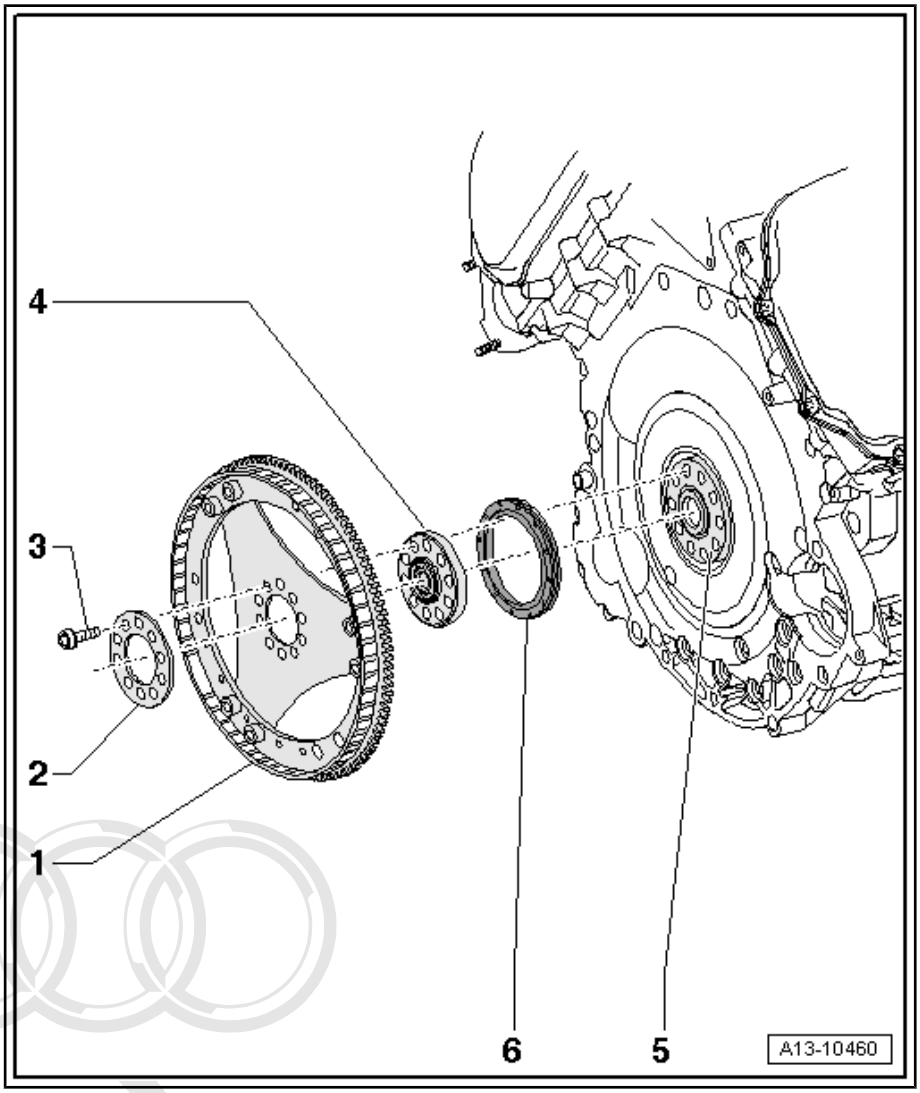

2.5 Removing and installing drive plate - vehicles with automatic gearbox 09L

Special tools and workshop equipment required

♦ Counterhold tool - 10 - 201-

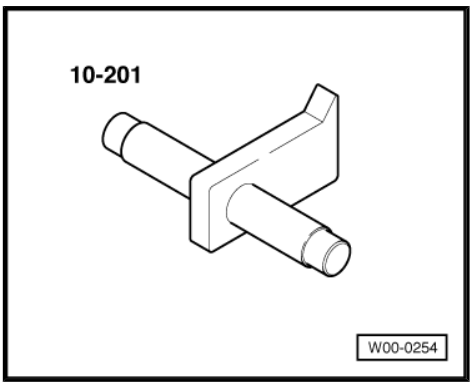

Removing

– Remove automatic gearbox ⇒ Rep. gr. 37 .

– Insert counterhold tool - 10 - 201- to slacken bolts.
– Mark installation position of drive plate on engine.
– Unbolt drive plate.
– Take out centralising disc located behind.

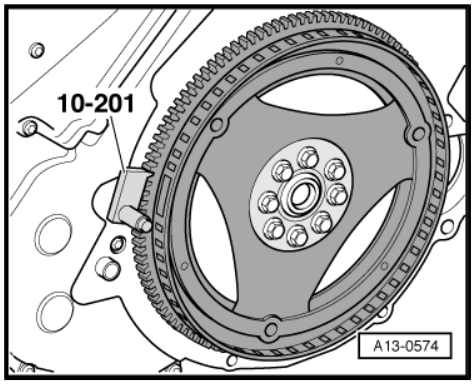

Installing

Installation is carried out in the reverse order; note the following:

– Install drive plate with centralising disc -arrow- and washer.
– Use new securing bolts.
– Reverse position of counterhold tool - 10 - 201- in order to tighten bolts.
– Install automatic gearbox ⇒ Rep. gr. 37 .

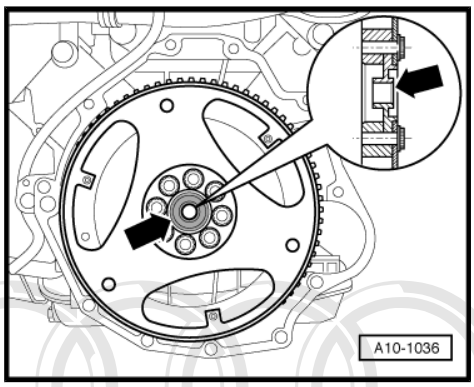

Tightening torque

Component	Nm
Drive plate to crankshaft	60 + 90° 1)2)
• 1) Renew bolts. • 2) 90° = one quarter turn.	

2.6 Renewing crankshaft oil seal (timing chain end)

Special tools and workshop equipment required

♦ Fitting tool - T10122 A-

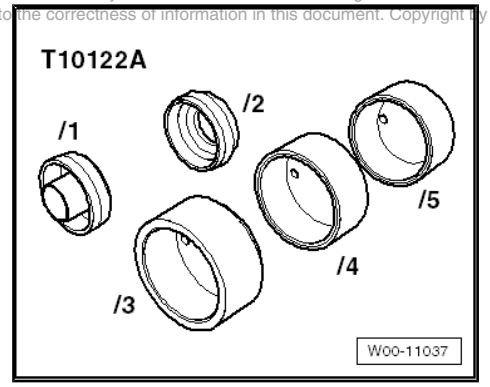

♦ Oil seal extractor lever - T20143/2-

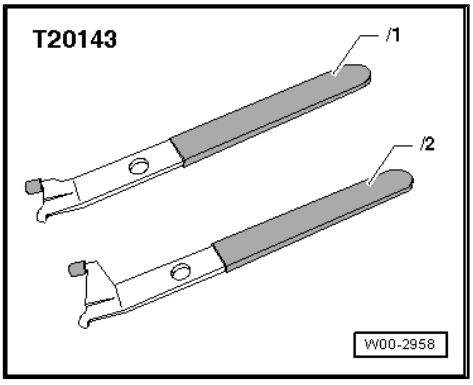

Procedure

– Remove automatic gearbox ⇒ Rep. gr. 37 .

– Remove damper unit ⇒ page 94 and flywheel ⇒ page 95 on vehicles with multitronic gearbox.

– Remove drive plate on vehicles with automatic gearbox 09L ⇒ page 97 .

– Pry out oil seal using oil seal extractor lever - T20143/2- .

– Clean running surface and sealing surface.

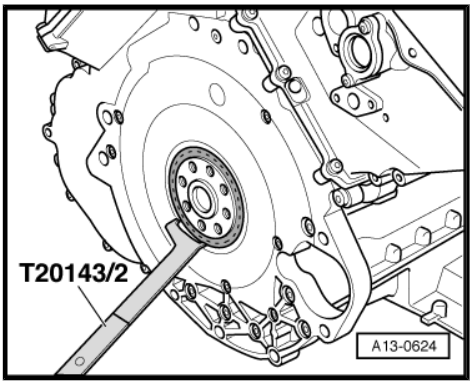

– Fit assembly aid - T10122/1- onto assembly sleeve - T10122/2- and slide oil seal -A- onto assembly sleeve.

– Take off assembly aid - T10122/1- .

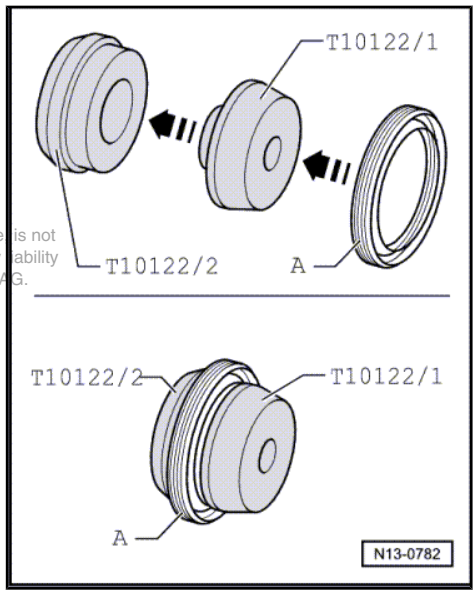

– Fit the assembly sleeve - T10122/2- with oil seal -1- onto crankshaft.

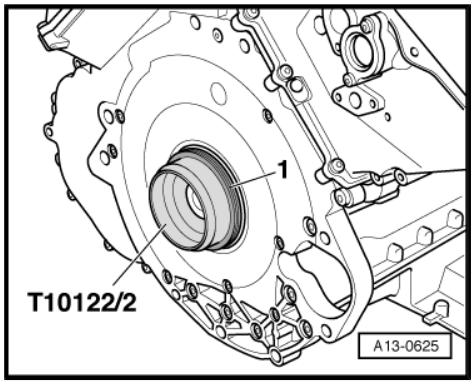

– Press in oil seal evenly all round using thrust piece - T10122/5- .

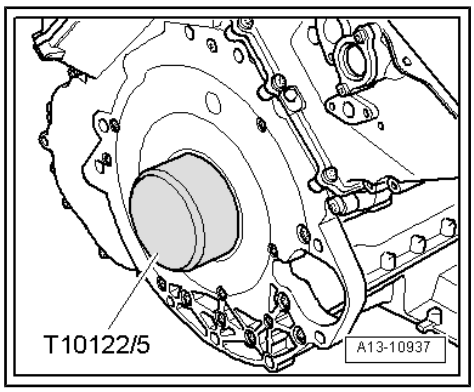

Remaining installation steps are carried out in reverse sequence; note the following:

– Install flywheel ⇒ page 95 and damper unit ⇒ page 94 on vehicles with multitronic gearbox.

– Install drive plate on vehicles with automatic gearbox 09L ⇒ page 97 .

– Install automatic gearbox ⇒ Rep. gr. 37 .

3 Timing chain covers

⇒ "3.1 Timing chain covers - exploded view", page 101

⇒ "3.2 Removing and installing timing chain covers (left and right)", page 101

⇒ "3.3 Removing and installing timing chain cover (bottom)", page 106

3.1 Timing chain covers - exploded view

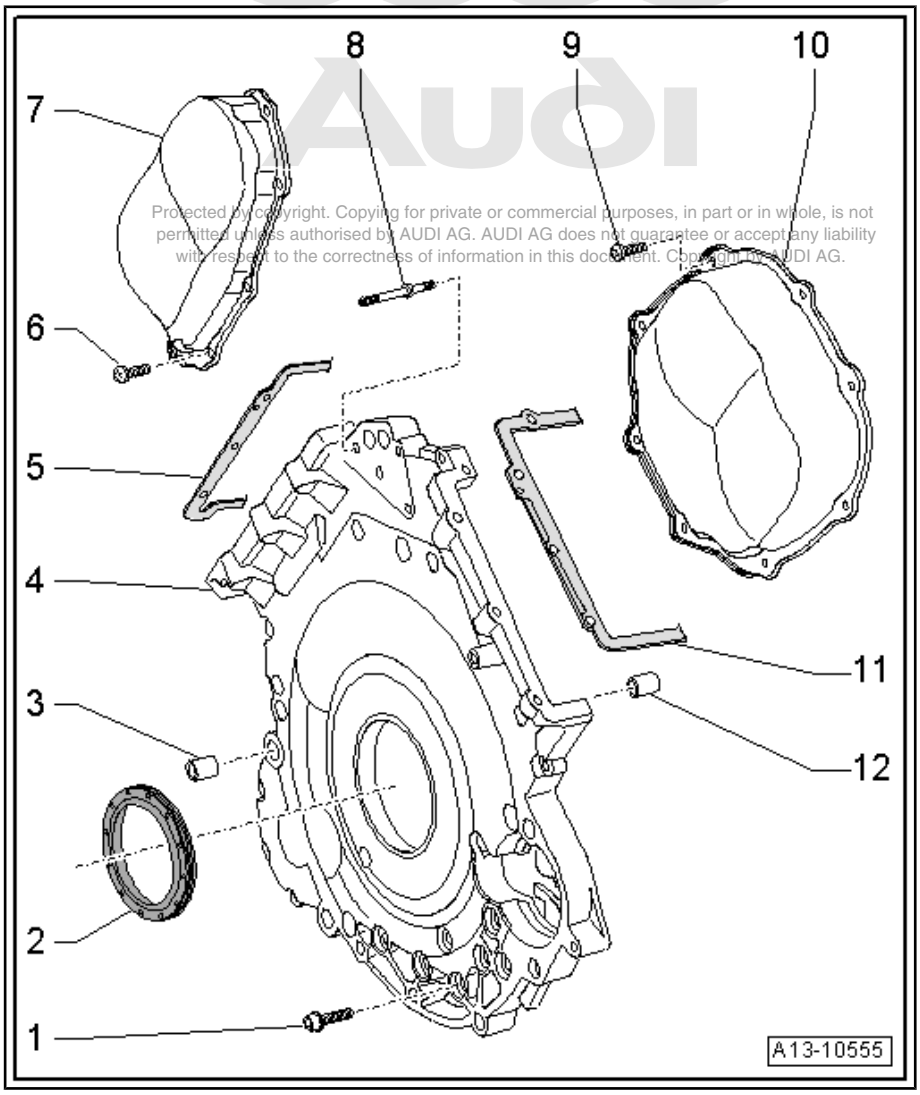

1 - M6: 9 Nm; M8: 20 Nm
- ❑ Note correct sequence when tightening ⇒ page 111

2 - Crankshaft oil seal (timing chain end)
- ❑ Renewing ⇒ page 98

3 - Dowel sleeve
- ❑ 2x

4 - Timing chain cover (bottom)
- ❑ Removing and installing ⇒ page 106

5 - Cylinder head gasket (left-side)

6 - 5 Nm + 90° (1/4 turn) further
- ❑ Renew
- ❑ Note correct sequence when tightening ⇒ page 105

7 - Timing chain cover (left-side)
- ❑ Removing and installing ⇒ page 101

8 - 16 Nm

9 - 5 Nm + 90° (1/4 turn) further
- ❑ Renew
- ❑ Note correct sequence when tightening ⇒ page 105

10 - Timing chain cover (right-side)
- ❑ Removing and installing ⇒ page 101

11 - Cylinder head gasket (right-side)

12 - Dowel sleeve
- ❑ 2x

3.2 Removing and installing timing chain covers (left and right)

Special tools and workshop equipment required

- Electric drill with plastic brush attachment
- Safety goggles
- Sealant ⇒ Electronic parts catalogue

Removing

Note

All cable ties which are released or cut open when removing must be fitted in the same position when installing.

– Pull off engine cover panel (rear) -arrows-.

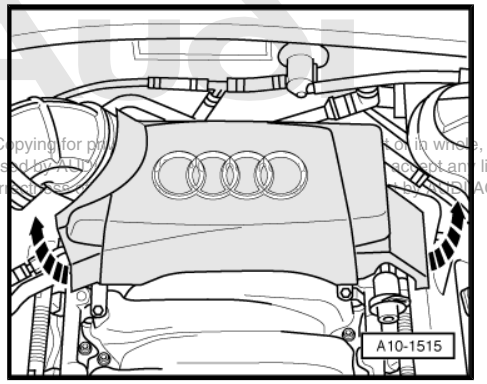

Timing chain cover (left-side):

– Unplug electrical connector -3- for Lambda probe 2 - G108- .

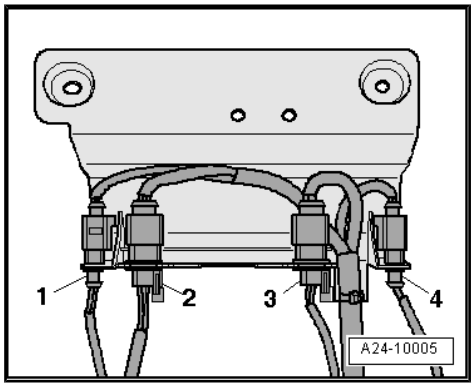

– Unplug electrical connectors -1 ... 3-.
– Unscrew nut -arrow-.
– Remove bracket for electrical connector -3-.
– Unscrew centre hex stud located beneath the bracket.
– Remove bracket for electrical connectors -1- and -2-.

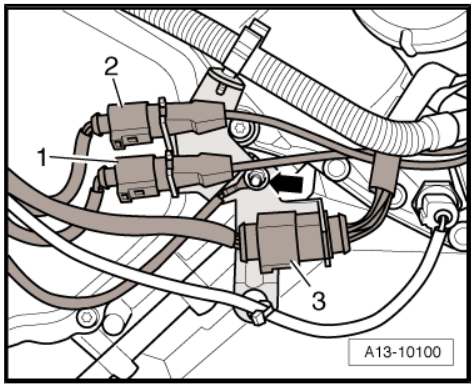

– Unscrew bolts -arrows- and unplug electrical connectors at ignition coils.

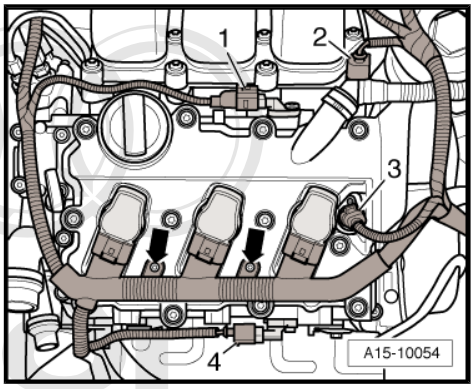

Note

Disregard items marked -1 ... 4-.

– Move wiring clear.

– Remove crankcase breather hose from cylinder head cover.

– Remove bolts -1 ... 8- and detach timing chain cover (left-side).

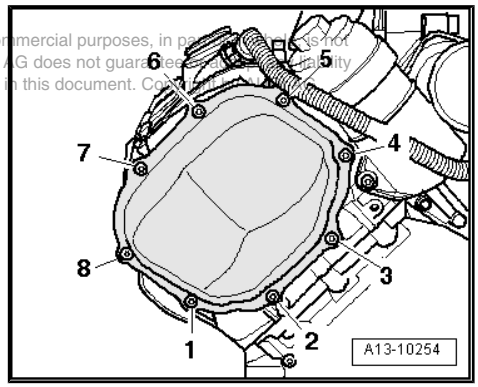

Timing chain cover (right-side):

– Pull non-return valve -2- off connection at air intake hose.

– Unclip vacuum line -1- and fuel line -3- from retainer on air intake hose.

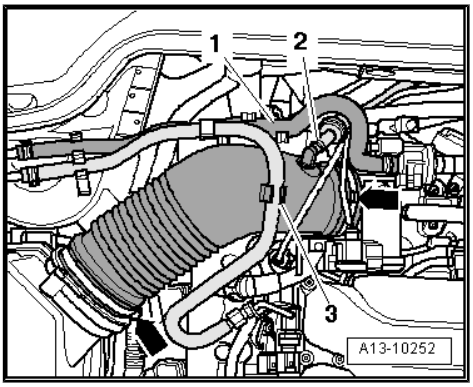

– Unplug electrical connector -2- for Lambda probe - G39- .

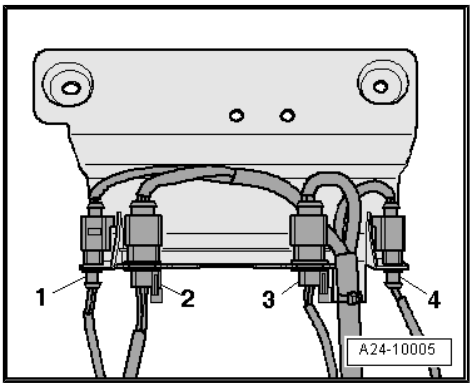

– Unplug electrical connector -1-.

– Remove bolt -arrow- and detach bracket for electrical connector.

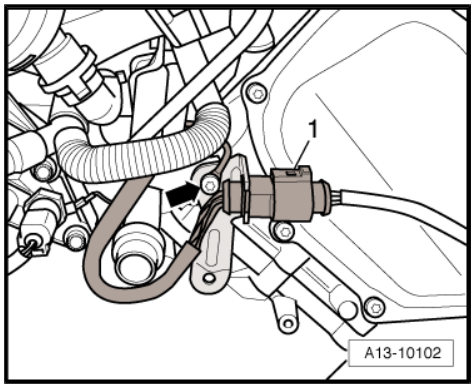

– Remove bolts -1 ... 8- and detach timing chain cover (right-side).

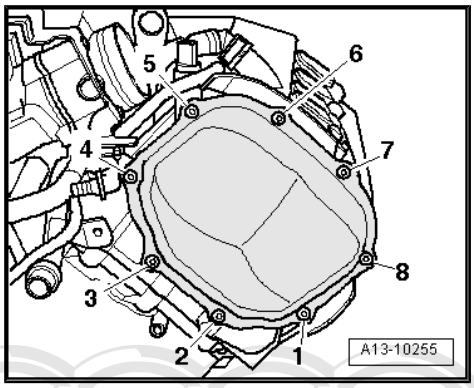

Installing

Note

Fit all cable ties in the original positions when installing.

WARNING

Wear safety goggles.

– Remove remaining sealant on timing chain covers and cylinder block / cylinder head using rotating plastic brush or similar.

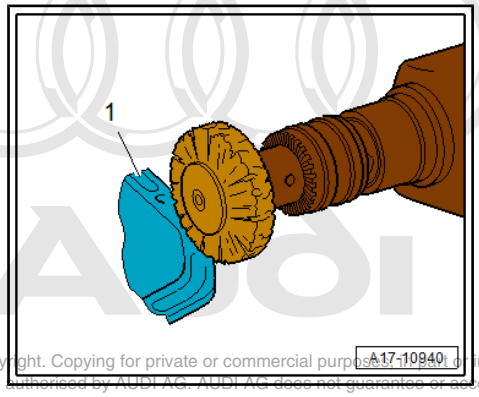

Caution

Make sure that no sealant residue gets into the engine.

– Clean sealing surfaces; they must be free of oil and grease.

– Cut off tube nozzle at front marking (diameter of nozzle approx. 1 mm).

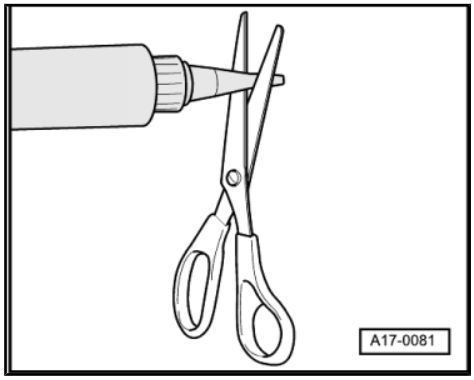

– Apply sealant bead -arrow- onto clean sealing surfaces of timing chain cover (left-side) as illustrated.

- The groove on the sealing surface must be completely filled with sealant.
- The bead of sealant must project 1.5 … 2.0 mm above the sealing surface.

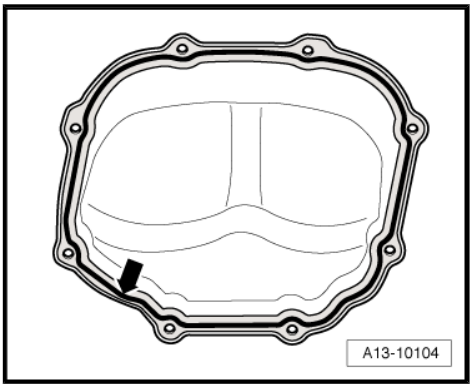

Note

The timing chain covers must be installed within 5 minutes after applying sealant.

– Fit timing chain cover (left-side) and tighten bolts in sequence -1 ... 8-.

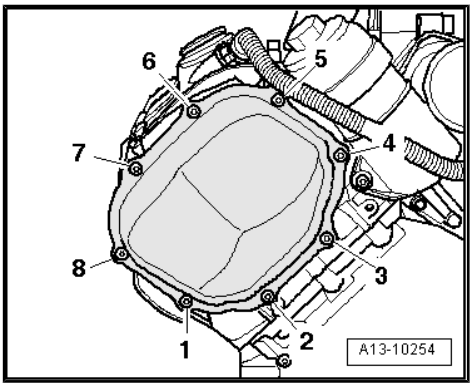

– Apply sealant bead -arrow- onto the clean sealing surface of the timing chain cover (right-side) as illustrated.

- The groove on the sealing surface must be completely filled with sealant.
- The bead of sealant must project 1.5 … 2.0 mm above the sealing surface.

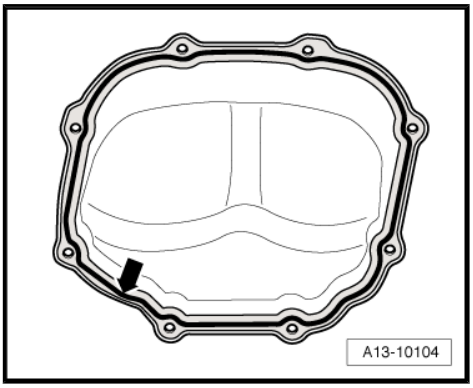

– Fit timing chain cover (right-side) and tighten bolts in sequence -1 ... 8-.

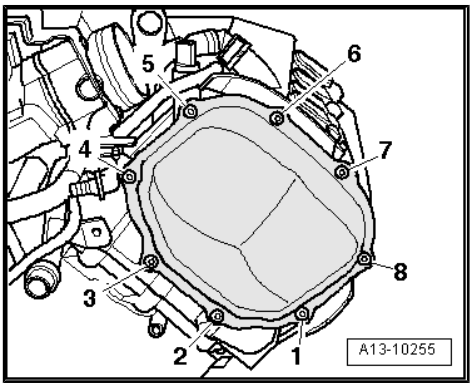

The remaining installation steps are carried out in the reverse sequence.

Tightening torques

Component	Nm
Timing chain covers (left and right) to engine	5 + 90° 1)2)
Bracket for electrical connectors to cylinder head	9
Hose clips (9 mm wide)	3

- 1) Renew bolts.
- 2) 90° = one quarter turn.

3.3 Removing and installing timing chain cover (bottom)

Special tools and workshop equipment required

- Used oil collection and extraction unit - V.A.G 1782-

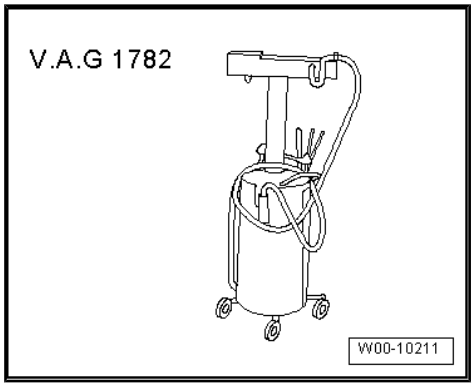

- Electric drill with plastic brush attachment
- Safety goggles
- Sealant ⇒ Electronic parts catalogue

Removing

Note

All cable ties which are released or cut open when removing must be fitted in the same position when installing.

– Remove automatic gearbox ⇒ Rep. gr. 37 .

WARNING

Make sure that the lock carrier is installed and the torque reaction support is secured on the vehicle before performing the following steps.

– Remove damper unit ⇒ page 94 and flywheel ⇒ page 95 on vehicles with multitronic gearbox.

– Remove drive plate on vehicles with automatic gearbox 09L ⇒ page 97 .

– Unplug electrical connectors -1 ... 3-.

– Unscrew nut -arrow-.

– Remove bracket for electrical connector -3-.

– Unscrew centre hex stud located beneath the bracket.

– Remove bracket for electrical connectors -1- and -2-.

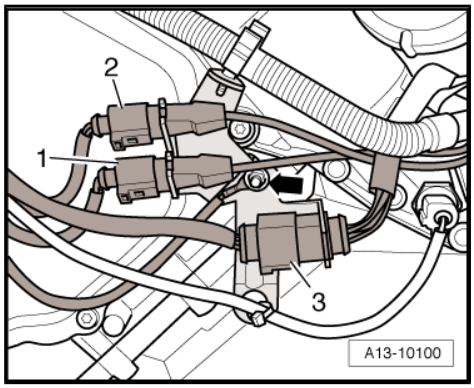

– Remove bolts -1 ... 8- and detach timing chain cover (left-side).

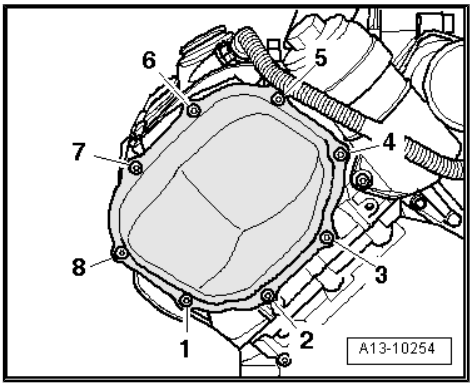

– Unplug electrical connector -1-.
– Remove bolt -arrow- and detach bracket for electrical connector.

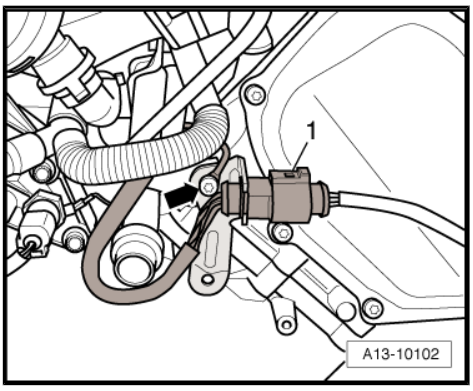

– Remove bolts -1 ... 8- and detach timing chain cover (right-side).

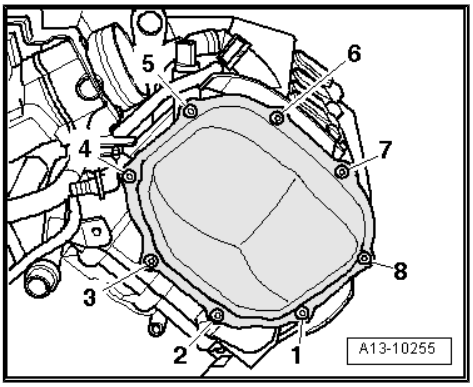

– Unscrew sealing cap -arrow- for oil filter housing.
– Remove oil filter element.
– Extract engine oil from oil filter housing using used oil collection and extraction unit - V.A.G 1782-.

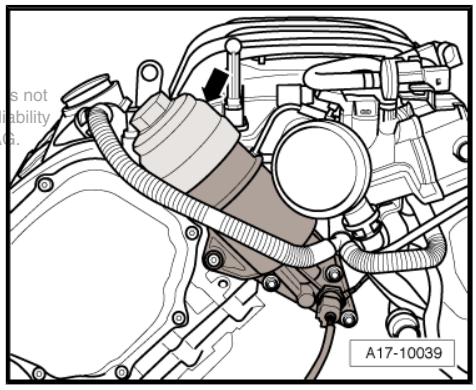

– Unplug electrical connector at oil pressure switch - F1- -arrow-.
– Place used oil collection and extraction unit - V.A.G 1782- under engine.
– Unscrew oil pressure switch.

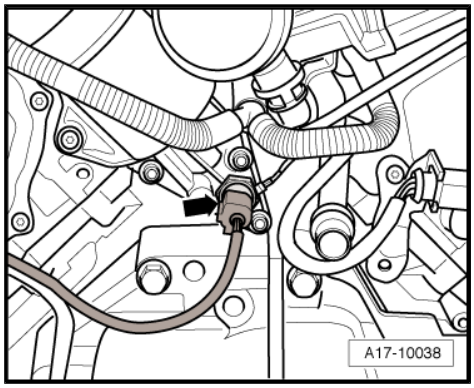

– Remove bolts -arrows-.
– Also unscrew multi-point socket flange nut ⇒ Item 3 (page 210) .
– Remove oil filter housing.
– Drain off engine oil.

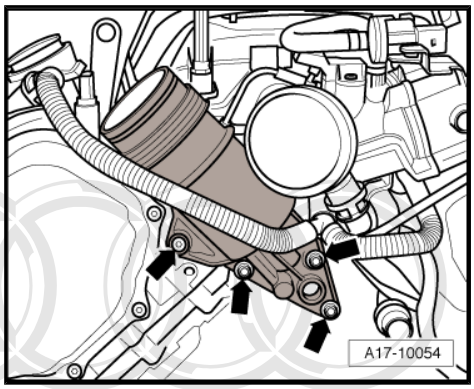

– Remove bolts -arrows-.
– Unscrew bolts -1 … 9- and remove timing chain cover (bottom).
– Press out crankshaft oil seal (rear) from timing chain cover (bottom).

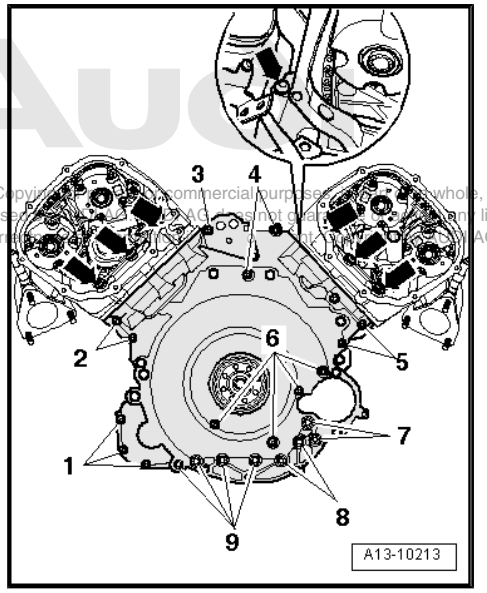

Installing

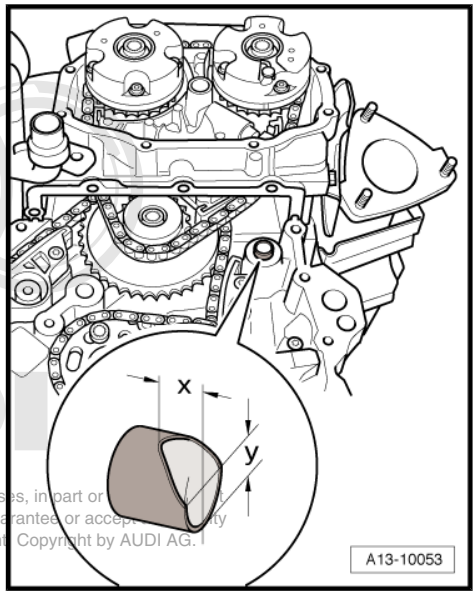

Note

- *Renew gaskets, seals and O-rings.*
- *Fit all cable ties in the original positions when installing.*

– Pull dowel sleeve -arrow- (top right) out of cylinder block.

– Bevel the dowel sleeve with a file, as illustrated.

• Dimension -x- = 6.5 mm.

• Dimension -y- = 8 mm.

– Fit dowel sleeve on cylinder block in such a way that the bevelled side points upwards.

Note

Bevelling the dowel sleeve makes it easier to fit the timing chain cover (bottom) with the cylinder head installed.

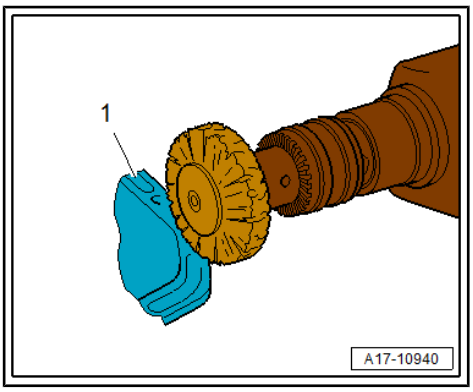

WARNING

Wear safety goggles.

– Remove remaining sealant on timing chain cover and cylinder block / cylinder head using rotating plastic brush or similar.

Caution

Make sure that no sealant residue gets into the engine.

– Clean sealing surfaces; they must be free of oil and grease.

– Clean any old sealing compound from the bores -arrow- in the cylinder head gaskets.

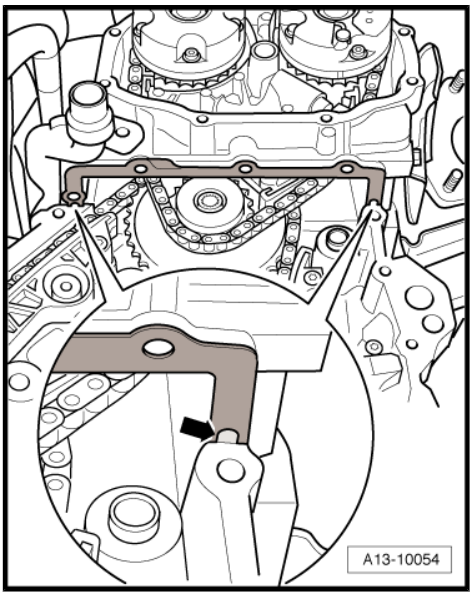

Note

With the cylinder head installed the holes in the cylinder head gasket are only half visible.

Caution

The cylinder head gasket must not to be bent more than a small amount. If the cylinder head gasket has been bent and kinked it must be renewed.

– Carefully bend the ends of the cylinder head gaskets down very slightly -arrows-, just far enough to be able to clean the upper sealing surface on the gasket and cylinder head.

– Clean both cylinder head gaskets (top and bottom); they must be free of oil and grease.

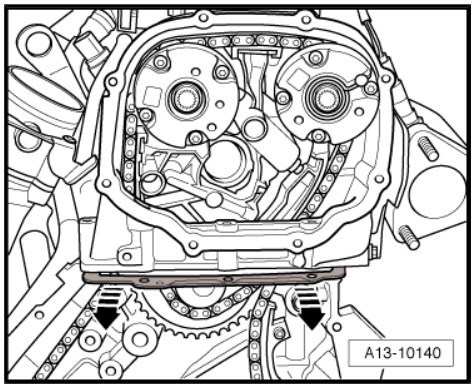

– Cut off tube nozzle at front marking (diameter of nozzle approx. 2 mm).

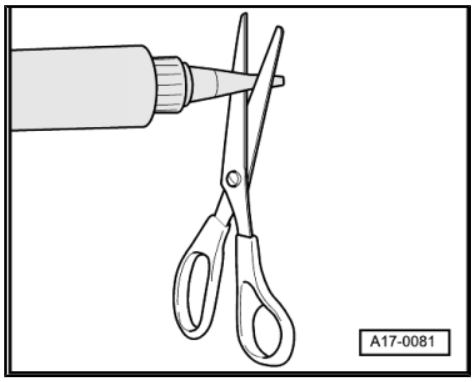

Note

- *The sealant must be applied at several points on the engine as described below.*
- *The sealant needs only approx. 5 minutes to harden after being applied.*

Caution

The cylinder head gasket must not to be bent more than a small amount. If the cylinder head gasket has been bent and kinked it must be renewed.

– Apply a small amount of sealant to sealing surfaces of cylinder head gaskets (top and bottom). To do so, you again have to bend cylinder head gaskets down very slightly.

– Use a flat object (e.g. a feeler gauge) to apply sealant to the area between cylinder head and gasket.

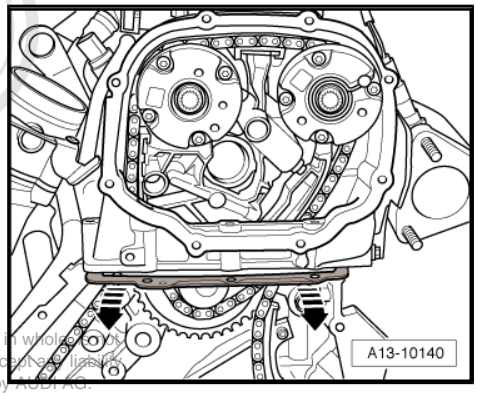

– Fill cleaned holes -arrow- in cylinder head gasket with sealant.

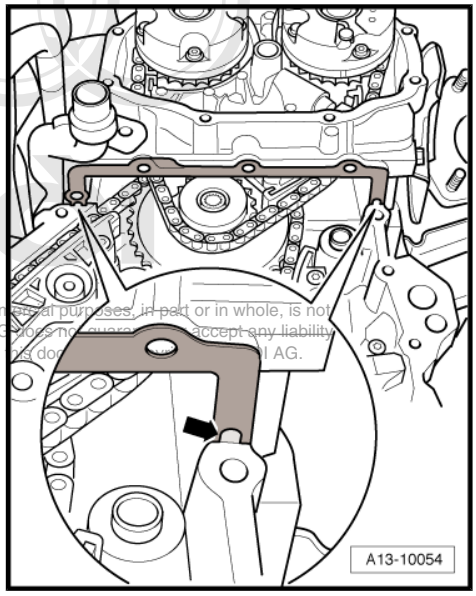

– Apply the beads of sealant -1 ... 5- onto the clean sealing surfaces of the timing chain cover (bottom) as illustrated.

• The groove on the sealing surface must be completely filled with sealant.

• The beads of sealant must project 1.5 … 2.0 mm above the sealing surface.

• The sealant -item 2- must be applied in a continuous bead as shown in the illustration (although the groove is not continuous).

– Insert seals -arrows- in grooves on timing chain cover (bottom).

– Fit timing chain cover (bottom), guiding it towards the sealing surface on cylinder block and cylinder head at an angle and from below.

– Take care not to damage the cylinder head gaskets when fitting the cover. Renew gaskets if damaged.

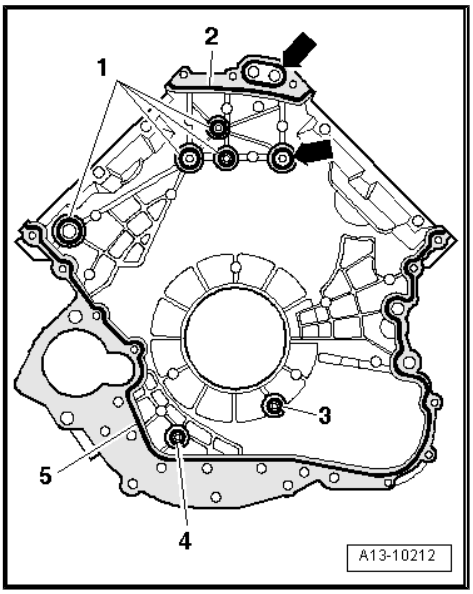

– Tighten bolts as follows.

1. Apply locking fluid to bolts -arrows- and tighten to 5 Nm.
2. Tighten bolts -1 ... 9- to 9 Nm in diagonal sequence.
3. Tighten bolts -arrows- to 9 Nm.
4. Tighten bolts -7-, -8- and -9- to 20 Nm.
5. Tighten stud -3- to 16 Nm.

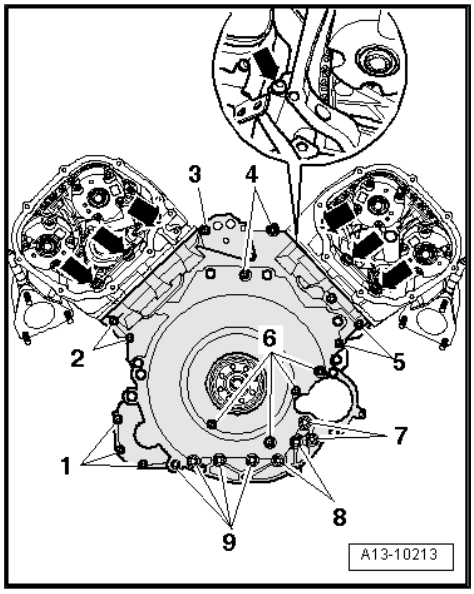

All vehicles:

Remaining installation steps are carried out in reverse sequence; note the following:

– Install timing chain covers (left and right) ⇒ page 104 .
– Install oil filter housing ⇒ page 211 .
– Install crankshaft oil seal (timing chain end) ⇒ page 98 .
– Install flywheel ⇒ page 95 and damper unit ⇒ page 94 on vehicles with multitronic gearbox.
– Install drive plate on vehicles with automatic gearbox 09L ⇒ page 97 .
– Install automatic gearbox ⇒ Rep. gr. 37 .
– Fill up with engine oil and check oil level ⇒ page 217 .

Tightening torques

Component		Nm
Timing chain cover (bottom) to engine	M6	9 1)
	M7	16
	M8	20
Timing chain covers (left and right) to engine		5 + 90° 2)3)
Bracket for electrical connectors to cylinder head		9

- 1) Install securing bolts between cylinder head and timing chain cover (bottom) using locking fluid; locking fluid ⇒ Electronic parts catalogue .
- 2) Renew bolts.
- 3) 90° = one quarter turn.

4 Camshaft drive

4.1 Camshaft timing chains - exploded view

Note

- *The crankshaft and camshafts must only be turned with the chain drive mechanism fully installed. Otherwise the valves may strike the pistons, causing damage to valves and piston crowns.*
- *Before removing the camshaft timing chain, mark the direction of rotation with paint. If a used chain rotates in the opposite direction when it is refitted, this can cause breakage.*

Camshaft timing chain (left-side)

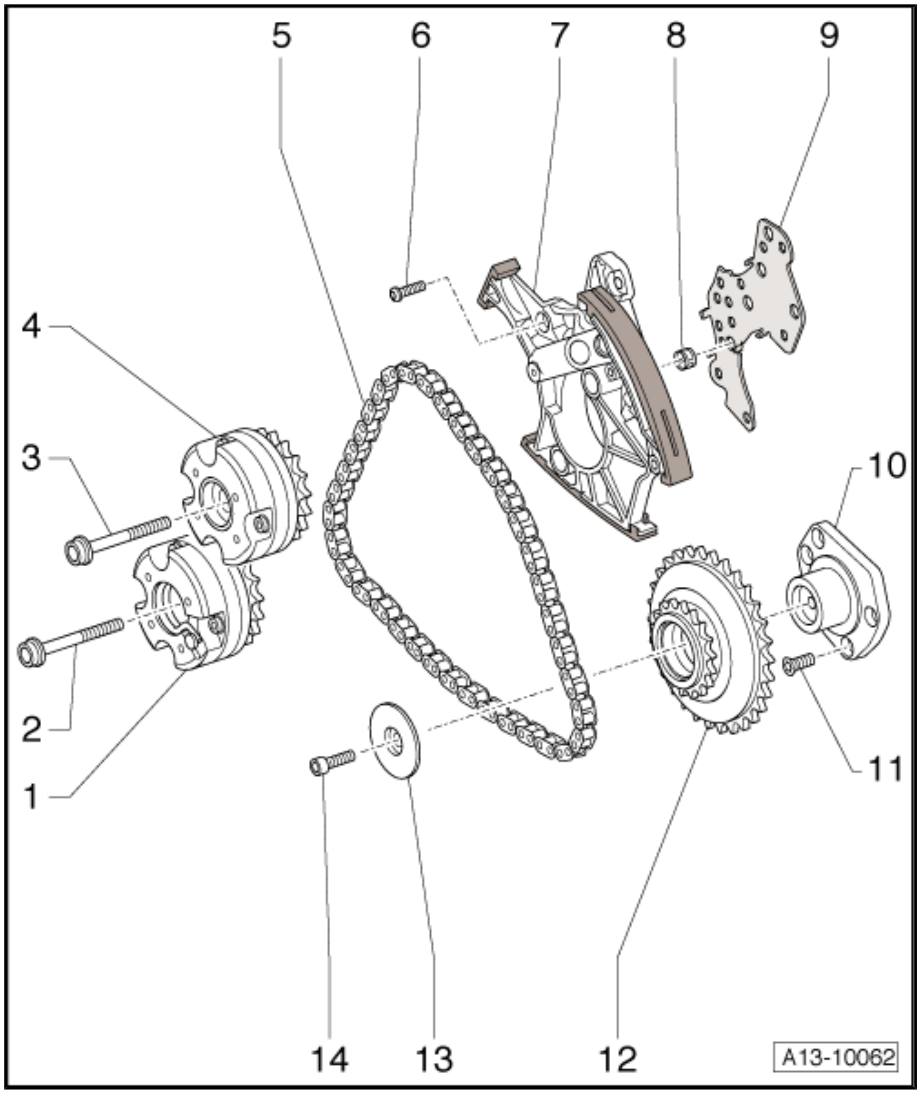

1 - Camshaft adjuster for exhaust camshaft

- ❑ Identification “Exhaust”
- ❑ Removing and installing ⇒ “4.2 Detaching timing chains from camshafts, removing and installing chain tensioners”, page 116

2 - Bolt for camshaft

- ❑ Renew
- ❑ Pre-tightening torque: 40 Nm
- ❑ Final tightening torque: 80 Nm + 90° ($^1/_4$ turn) further

3 - Bolt for camshaft

- ❑ Renew
- ❑ Pre-tightening torque: 40 Nm
- ❑ Final tightening torque: 80 Nm + 90° ($^1/_4$ turn) further

4 - Camshaft adjuster for inlet camshaft

- ❑ Identification “Intake”
- ❑ Removing and installing ⇒ “4.2 Detaching timing chains from camshafts, removing and installing chain tensioners”, page 116

5 - Camshaft timing chain (left-side)

- ❑ Removing and installing ⇒ page 116

6 - 9 Nm

7 - Chain tensioner for camshaft timing chain (left-side)

- ❑ Removing and installing ⇒ “4.2 Detaching timing chains from camshafts, removing and installing chain tensioners”, page 116

8 - Oil strainer

- ❑ Inserted in chain tensioner
- ❑ Watch position of locking lug on outer circumference

9 - Gasket

- ❑ Renew
- ❑ Clipped onto chain tensioner

10 - Bearing bracket for drive sprocket

11 - 8 Nm + 45° ($^1/_8$ turn) further

- ❑ Renew
- ❑ Lubricate with oil before installing

12 - Drive sprocket for camshaft timing chain (left-side)

13 - Thrust washer for drive sprocket

14 - 6 Nm + 60° ($^1/_6$ turn) further

- ❑ Renew

Camshaft timing chain (right-side)

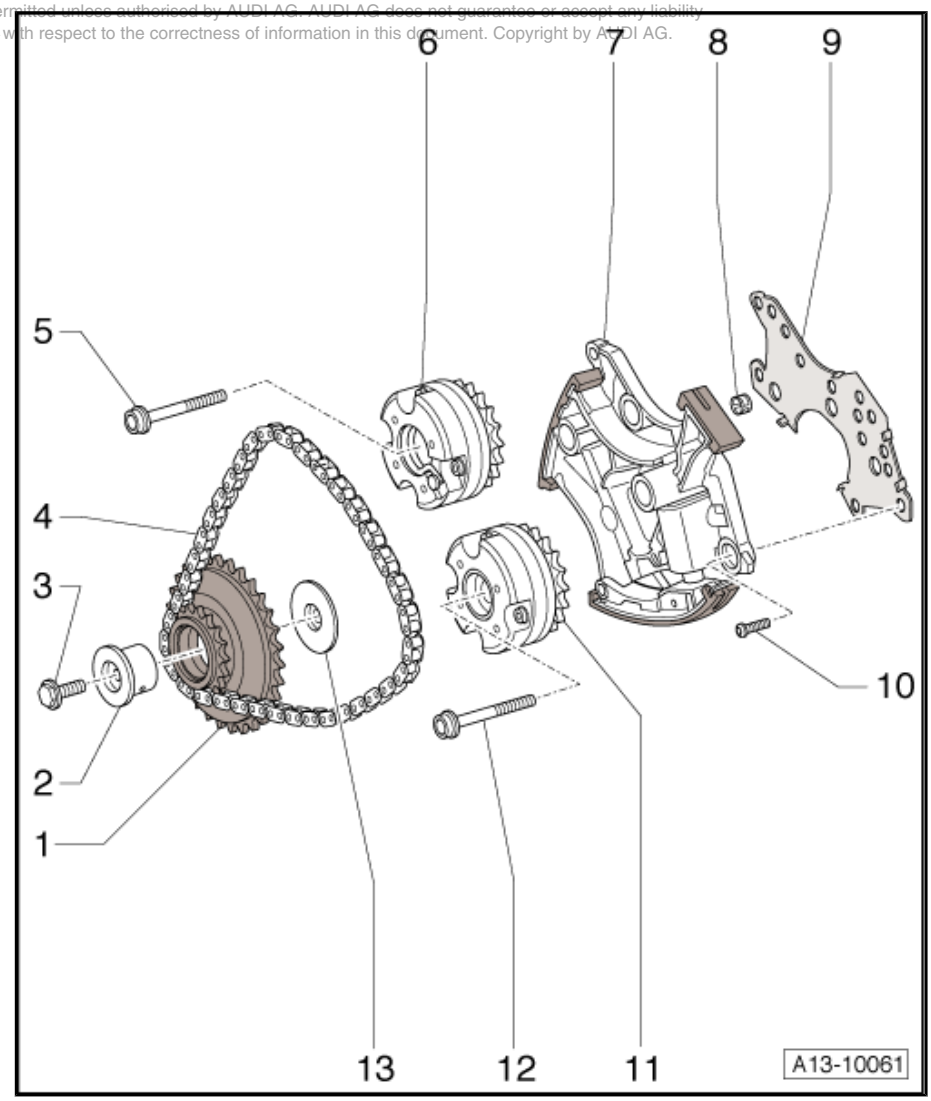

1 - Drive sprocket for camshaft timing chain (right-side)

2 - Bearing mounting for drive sprocket

3 - 30 Nm + 90° ($^1/_4$ turn) further

4 - Camshaft timing chain (right-side)

- ❑ Removing and installing ⇒ page 116

5 - Bolt for camshaft

- ❑ Renew
- ❑ Pre-tightening torque: 40 Nm
- ❑ Final tightening torque: 80 Nm + 90° ($^1/_4$ turn) further

6 - Camshaft adjuster for inlet camshaft

- ❑ Identification “Intake”
- ❑ Removing and installing ⇒ “4.2 Detaching timing chains from camshafts, removing and installing chain tensioners”, page 116

7 - Chain tensioner for camshaft timing chain (right-side)

- ❑ Removing and installing ⇒ “4.2 Detaching timing chains from camshafts, removing and installing chain tensioners”, page 116

8 - Oil strainer

- ❑ Inserted in chain tensioner
- ❑ Installation position: locating lug on outer circumference

9 - Gasket

- ❑ Renew
- ❑ Clipped onto chain tensioner

10 - 9 Nm

11 - Camshaft adjuster for exhaust camshaft

- ❑ Identification “Exhaust”
- ❑ Removing and installing ⇒ “4.2 Detaching timing chains from camshafts, removing and installing chain tensioners”, page 116

12 - Bolt for camshaft

- ❑ Renew
- ❑ Pre-tightening torque: 40 Nm
- ❑ Final tightening torque: 80 Nm + 90° ($^1/_4$ turn) further

13 - Thrust washer for drive sprocket

4.2 Detaching timing chains from camshafts, removing and installing chain tensioners

Special tools and workshop equipment required

- ♦ Counter-hold tool - T10172- with pin - T10172/2-
- ♦ Adapter - T40058-
- ♦ Locking pin - T40069-
- ♦ Camshaft clamp - T40070- (2x)
- ♦ Locking pin - T40071- (2x)

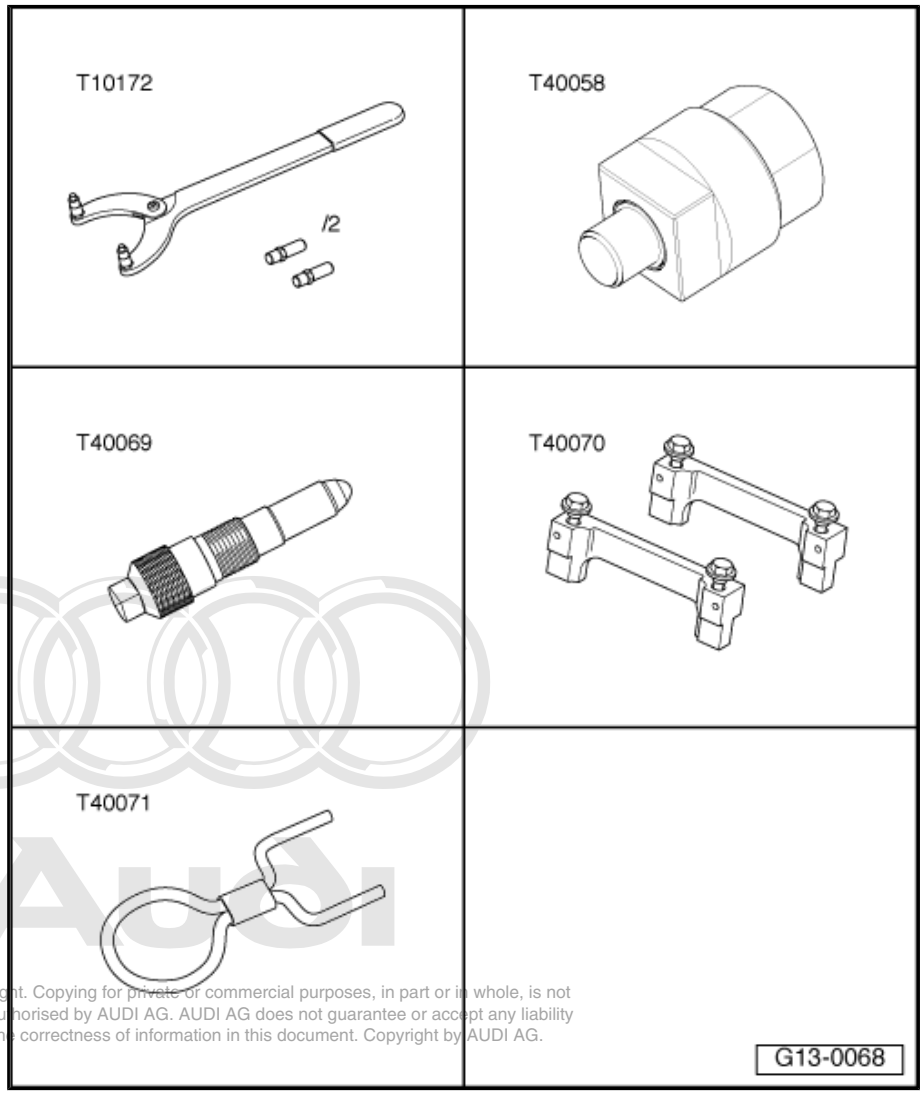

♦ Special wrench - T10035-

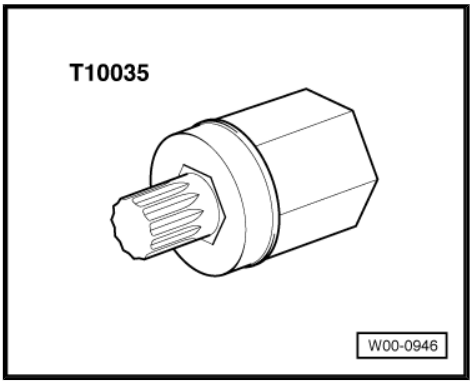

Removing

Note

In the following procedure the camshaft timing chains remain on the engine. If you want to detach the camshaft timing chains completely you must also remove the timing chain cover (bottom) *⇒ page 106* *.*

– Remove cylinder head cover: left-side ⇒ page 161 , right-side ⇒ page 162 .

– Remove timing chain covers (left and right) ⇒ page 101 .

– If fitted, remove bolts -arrows- securing exhaust pipe for auxiliary/additional heater to noise insulation.

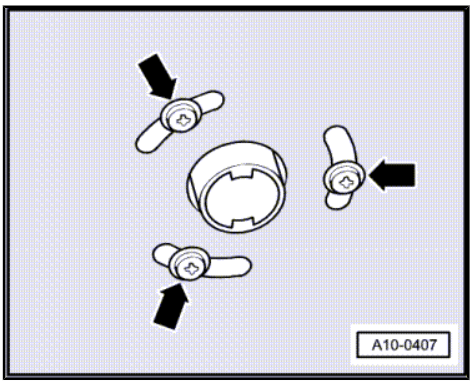

– Open quick-release fasteners -1- and remove noise insulation (front). Leave rear noise insulation in position.

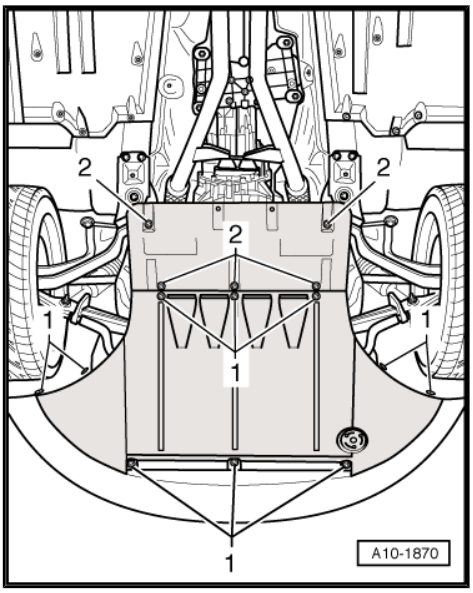

– Unbolt cross piece at lock carrier -arrows-.

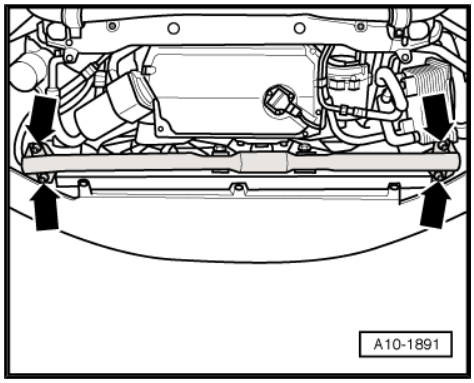

– Unscrew bolts -arrows- and remove cross piece from stop for torque reaction support.

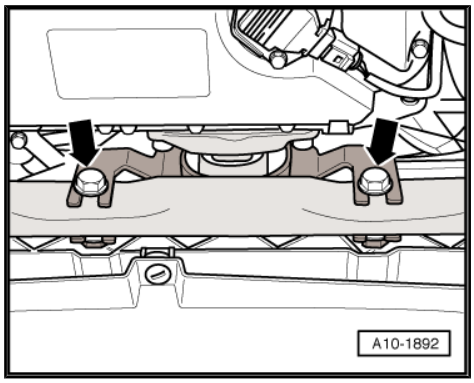

– Unscrew bolts -arrows- and remove torque reaction support together with stop for torque reaction support.

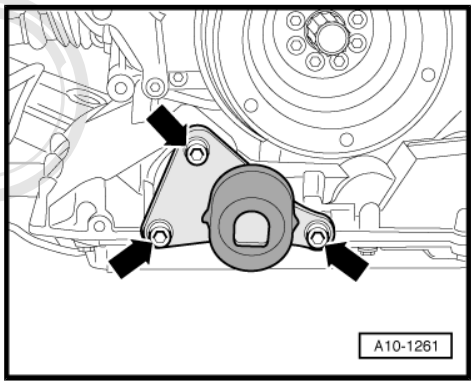

– Insert guide pin of adapter - T40058- with the larger-diameter section -arrow 1- pointing towards the engine. The smaller-diameter section -arrow 2- faces the adapter.

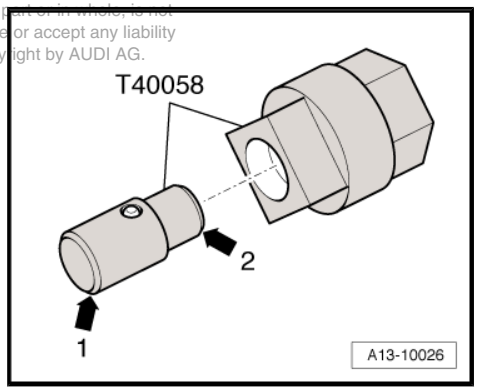

– Using adapter - T40058- turn the crankshaft in the normal direction of rotation -arrow- to TDC.

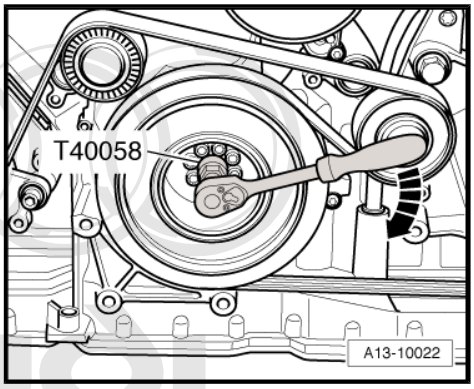

• The threaded holes -arrows- in the camshafts must face upwards.

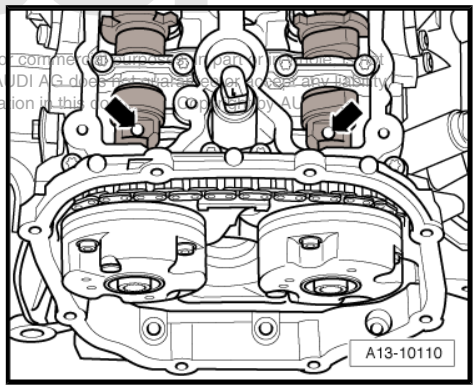

– Fit camshaft clamps - T40070- to both cylinder heads and tighten bolts -arrows- to 20 Nm.

• The camshaft clamp - T40070- is positioned correctly if the holes for the cylinder head bolts remain free.

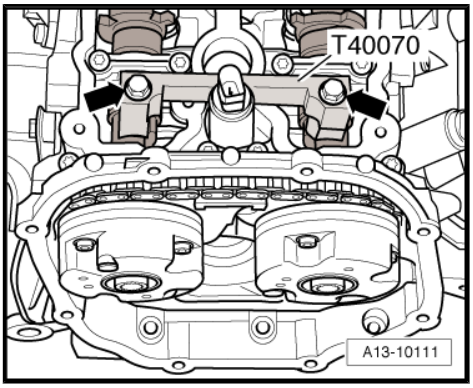

– Unscrew plug -arrow- from cylinder block.

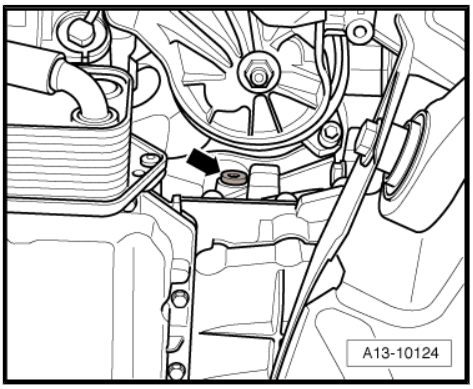

Note

For access to the plug, reach from behind the subframe towards the engine.

WARNING

To avoid any risk of injury, do not rotate the crankshaft while feeling for the TDC hole with your finger.

– Screw locking pin - T40069- into bore -1- (tightening torque: 10 Nm); if necessary, turn crankshaft backwards and forwards slightly to fully centralise locking pin.

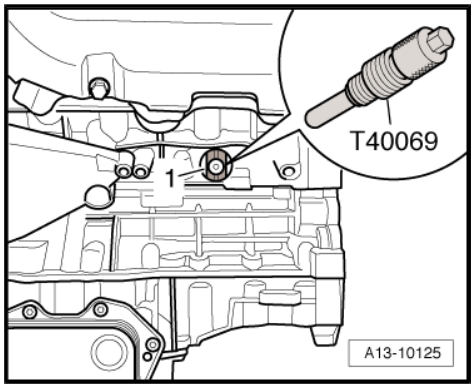

– Mark running direction of camshaft timing chain (left-side) with paint.
– Unscrew bolts -1- and -2- for camshaft adjusters using special wrench - T10035- .
– Remove both camshaft adjusters.

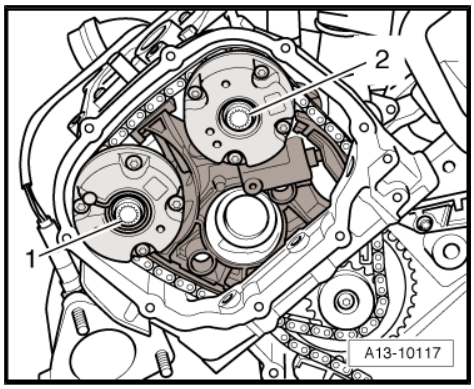

– Unscrew bolts -1- and -2- and remove chain tensioner.

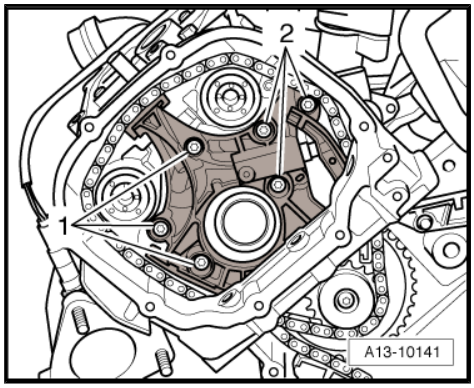

– Mark running direction of camshaft timing chain (right-side) with paint.
– Unscrew bolts -1- and -2- for camshaft adjusters using special wrench - T10035- .
– Remove both camshaft adjusters.

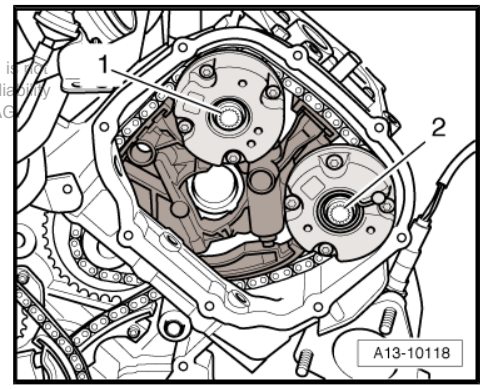

– Unscrew bolts -1- and -2- and remove chain tensioner.

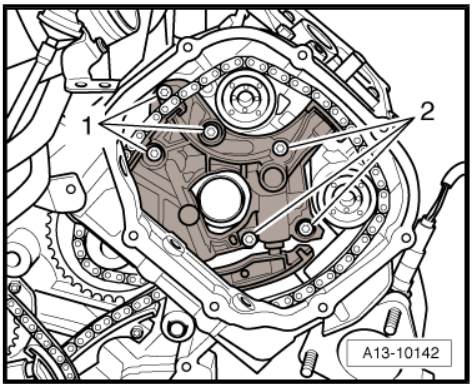

Installing

Note

- *Renew bolts which are tightened to a specified angle as well as seals and gaskets.*
- *The crankshaft must not be at TDC at any cylinder when the camshaft is turned. Otherwise there is a risk of damage to valves and piston crowns.*

Conditions:

- Drive chain for valve gear installed ⇒ page 129
- Crankshaft locked in TDC position with locking pin - T40069- .

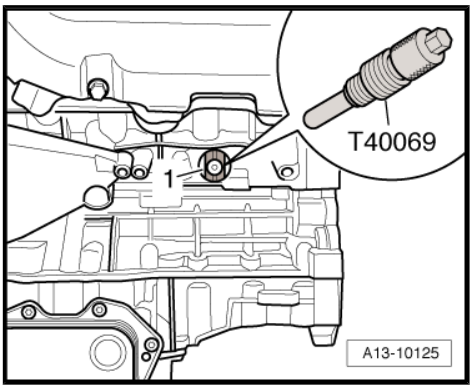

- Camshaft clamps - T40070- installed on both cylinder heads and tightened to 20 Nm.

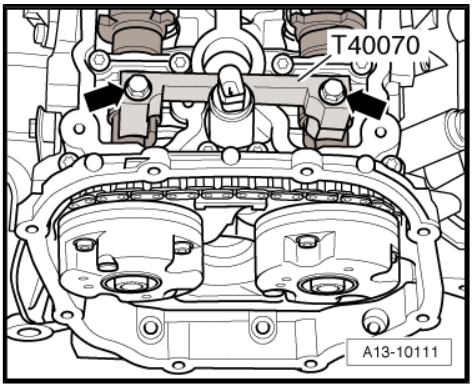

Procedure:

– First completely release guide rail of chain tensioners for camshaft timing chains (left and right) -arrow-.
- The piston -1- of the tensioning element must be fully extended, so that the locking device is released (only possibly when chain tensioner is removed).

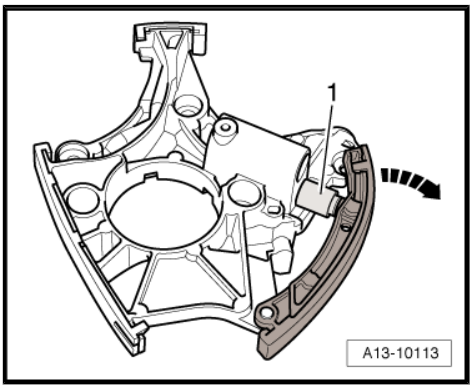

Note

Note the correct installation position if the tensioning element has been removed from the chain tensioner: drilling in base of housing faces chain tensioner and piston faces tensioner rail.

– Press guide rails of chain tensioners for timing chains (left and right) inwards in direction of -arrow- as far as stop. Then lock chain tensioners by inserting locking pin - T40071- .

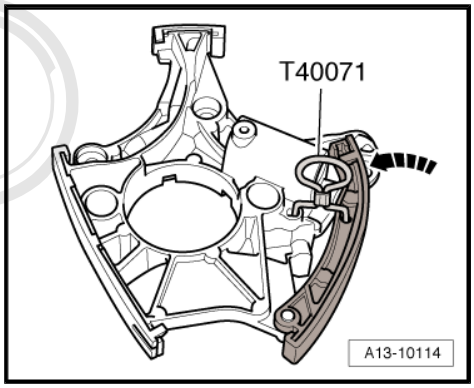

– If necessary, clean oil strainer -3-.
– Fit new gasket -2- to rear of chain tensioner -1-.

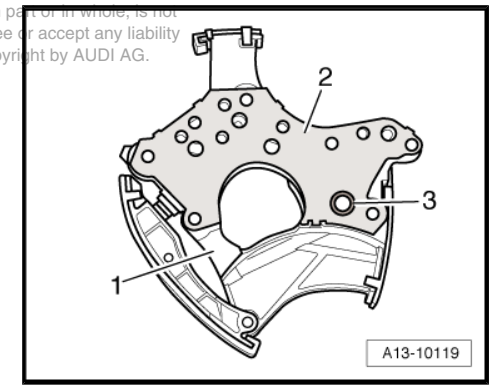

– Install chain tensioner on cylinder head (left-side) and position camshaft timing chain as shown in illustration.
– Tighten bolts -1- and -2-.

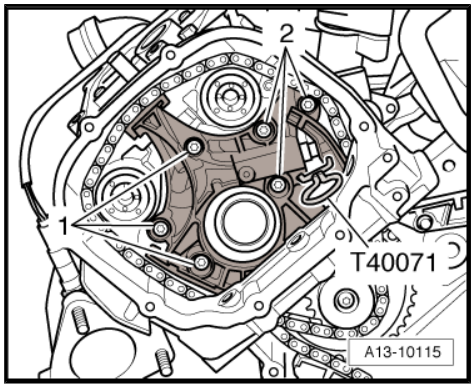

– Renew the camshaft bolts.
– Position camshaft timing chain on drive chain sprocket and camshaft adjusters and loosely screw in bolts -1- and -2-.
• It should just be possible to turn both camshaft adjusters on the camshaft without axial movement.

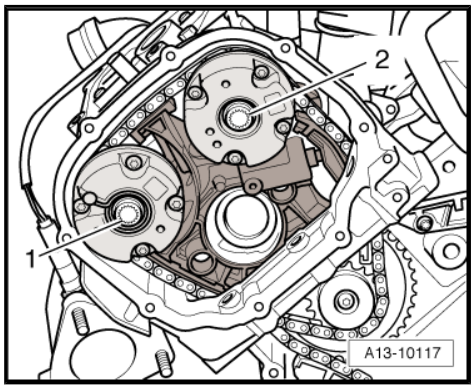

– Install chain tensioner on cylinder head (right-side) and position camshaft timing chain as shown in illustration.

– Tighten bolts -1- and -2-.

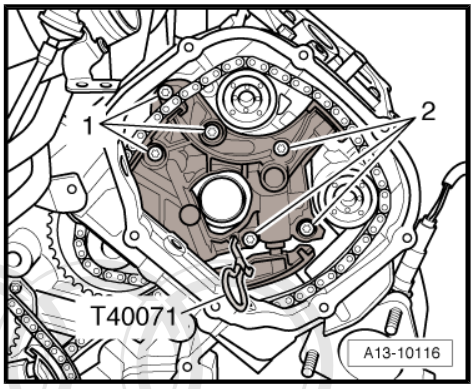

– Renew the camshaft bolts.

– Position camshaft timing chain on drive chain sprocket and camshaft adjusters and loosely screw in bolts -1- and -2-.

• It should just be possible to turn both camshaft adjusters on the camshaft without axial movement.

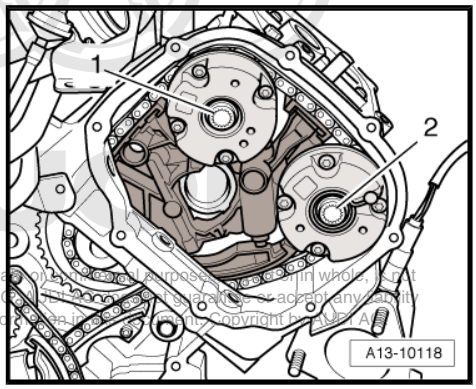

– Fit counterhold tool - T10172- with pin - T10172/2- onto camshaft adjuster of inlet camshaft (left-side).

– Pretension camshaft timing chain by pressing counterhold tool in direction of -arrow-.

– At the same time pre-tighten camshaft bolt using special wrench - T10035- and torque wrench.

• Tightening torque: 40 Nm

– Maintain tension on inlet camshaft and pre-tighten bolt -1- on exhaust camshaft.

• Tightening torque: 40 Nm

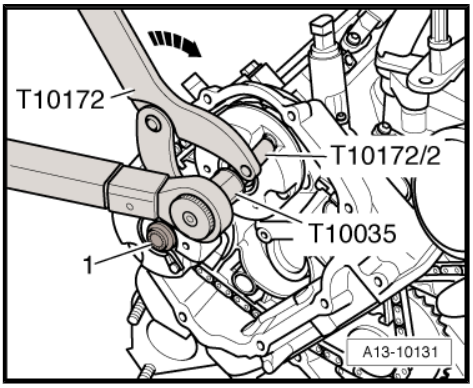

– Tighten camshaft bolts -1- and -2- at cylinder head (left-side) to final torque.

• Tightening torque: 80 Nm + 90° ($^1/_4$ turn further).

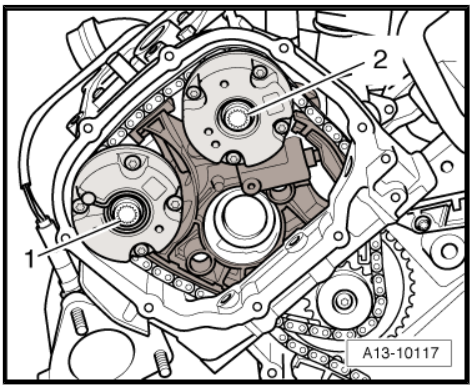

– Fit counterhold tool - T10172- with pin - T10172/2- onto camshaft adjuster of exhaust camshaft (right-side).

– Pretension camshaft timing chain by pressing counterhold tool in direction of -arrow-.

– At the same time pre-tighten camshaft bolt using special wrench - T10035- and torque wrench.

• Tightening torque: 40 Nm

– Maintain tension on exhaust camshaft and pre-tighten bolt -1- on inlet camshaft.

• Tightening torque: 40 Nm

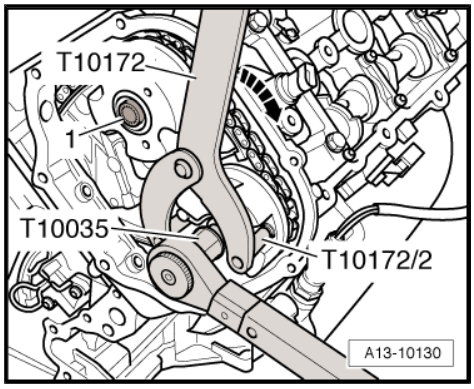

– Tighten camshaft bolts -1- and -2- at cylinder head (right-side) to final torque.

• Tightening torque: 80 Nm + 90° ($^1/_4$ turn further).

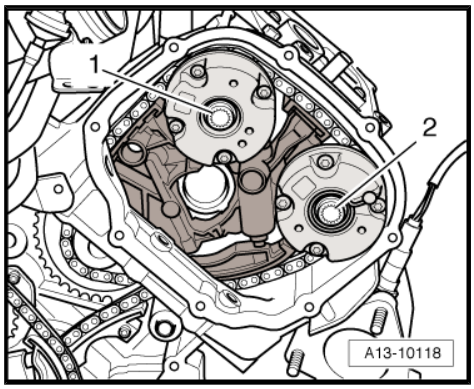

– Remove camshaft clamps - T40070- from both cylinder heads.

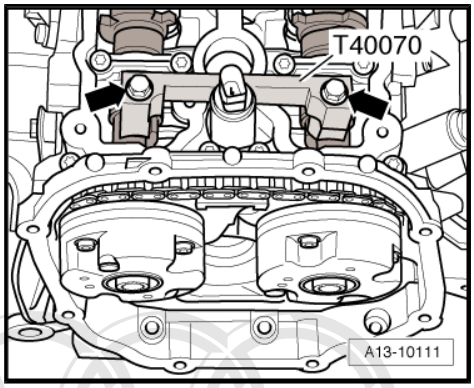

– Remove locking pin - T40069- .

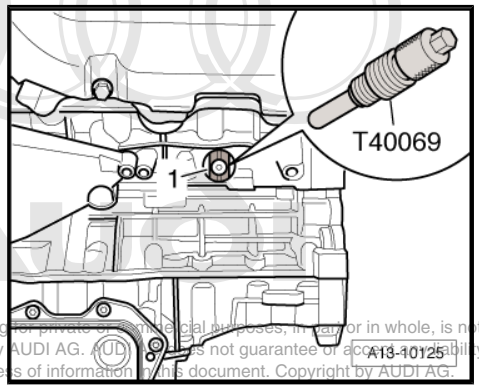

– Using adapter - T40058- , turn crankshaft two rotations in normal direction of rotation -arrow- until crankshaft is at TDC again.

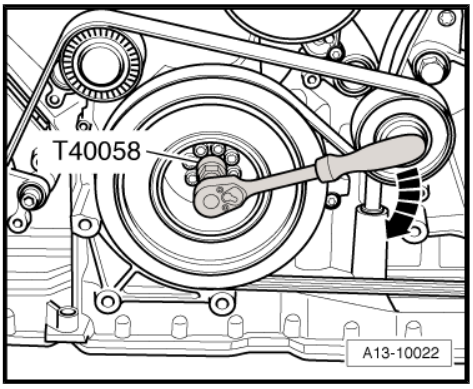

Note

If you turned the crankshaft beyond TDC, turn it back approx. 30° and set to TDC again.

- The threaded holes -arrows- in the camshafts must face upwards.

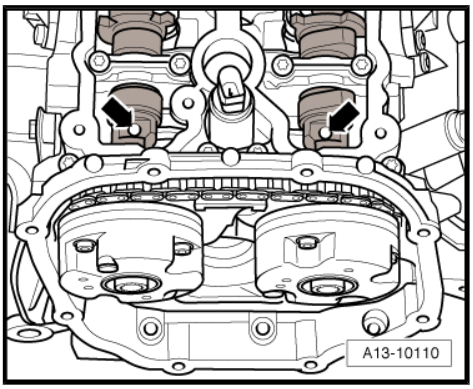

– Fit camshaft clamps - T40070- to both cylinder heads and tighten bolts -arrows- to 20 Nm.

- The camshaft clamp - T40070- is positioned correctly if the holes for the cylinder head bolts remain free.

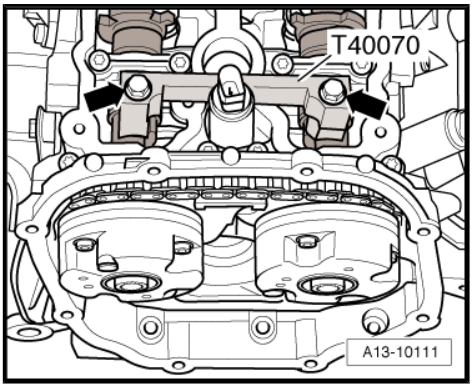

– Screw the locking pin - T40069- directly into the hole.

- The locking pin - T40069- must engage in the locating hole in crankshaft -1-. If it does not, reset valve timing.

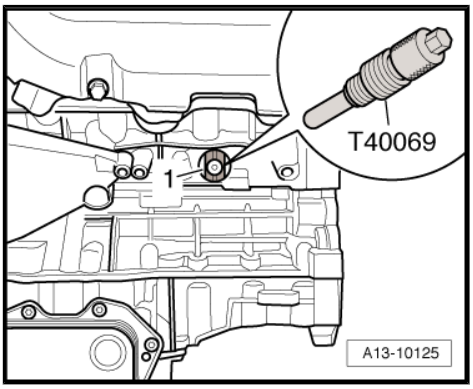

– Remove camshaft clamps from both cylinder heads.
– Remove locking pin.
– Screw plug -arrow- for TDC mark into cylinder block with new seal.

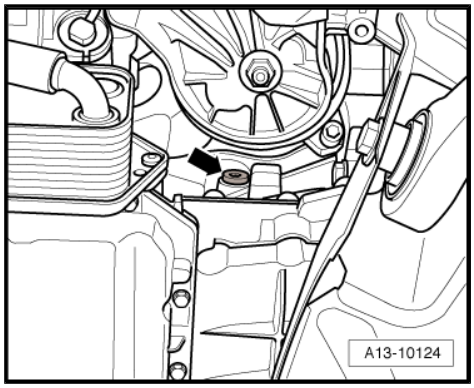

Remaining installation steps are carried out in reverse sequence; note the following:

– Fit torque reaction support together with stop for torque reaction support and tighten bolts -arrows-.
– Install timing chain covers (left and right) ⇒ page 101 .
– Install cylinder head cover: left-side ⇒ page 161 , right-side ⇒ page 162 .

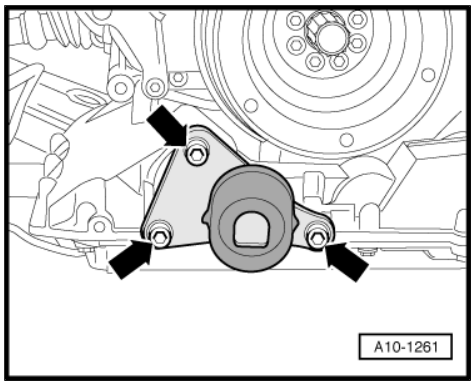

Tightening torques

Component	Nm
Chain tensioner to cylinder head	9
Camshaft bolts	80 + 90° 1) 2)
Screw plug in cylinder block	14 3)
Torque reaction support to top section of sump	40
Cross piece to lock carrier	42
Stop for torque reaction support to cross piece	65

- 1) Renew bolts.
- 2) 90° = a quarter of a turn.
- 3) Install with new seal.

4.3 Drive chain for valve gear - exploded view

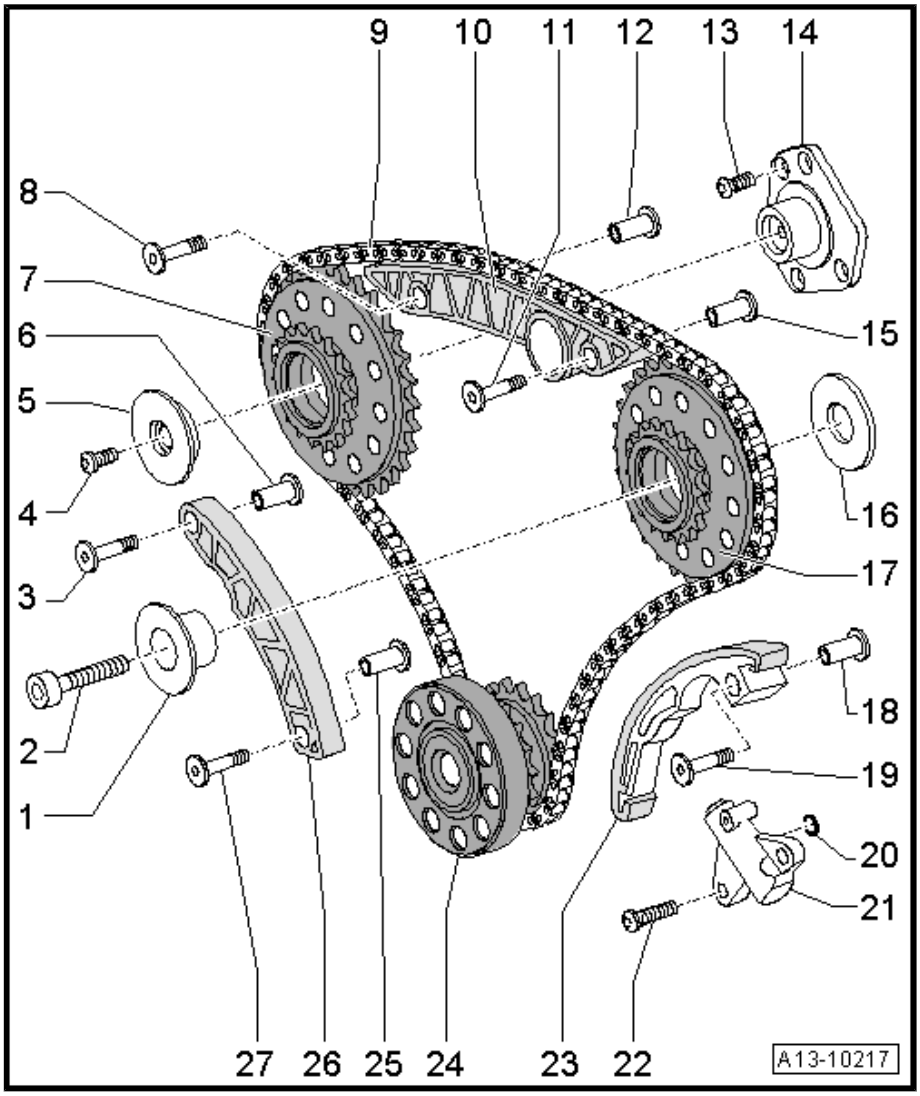

1 - Bearing mounting for drive sprocket

2 - 30 Nm + 90° ($^1/_4$ turn) further

- ❑ Renew

3 - Bolt

- ❑ Renew
- ❑ Types and tightening torque differ depending on version ⇒ page 128

4 - 6 Nm + 60° ($^1/_6$ turn) further

- ❑ Renew

5 - Thrust washer for drive sprocket

6 - Bush

- ❑ Depending on version ⇒ page 128

7 - Drive sprocket for camshaft timing chain (left-side)

8 - Bolt

- ❑ Renew
- ❑ Types and tightening torque differ depending on version ⇒ page 128

9 - Drive chain for valve gear

- ❑ Before removing, mark running direction with paint

10 - Guide rail

11 - Bolt

- ❑ Renew
- ❑ Types and tightening torque differ depending on version ⇒ page 128

12 - Bush

- ❑ Depending on version ⇒ page 128

13 - 8 Nm + 45° ($^1/_8$ turn) further

- ❑ Renew
- ❑ Lubricate with oil before installing

14 - Bearing bracket for drive sprocket

15 - Bush

- ❑ Depending on version ⇒ page 128

16 - Thrust washer

17 - Drive sprocket for camshaft timing chain (right-side)

18 - Bush

- ❑ Depending on version ⇒ page 128

19 - Bolt

- ❑ Renew
- ❑ Types and tightening torque differ depending on version ⇒ page 128

20 - O-ring

- ❑ Renew

21 - Chain tensioner

22 - 6 Nm + 45° ($^1/_8$ turn) further

- ❑ Renew

23 - Guide rail for chain tensioner

24 - Crankshaft

25 - Bush

- ❑ Depending on version ⇒ page 128

26 - Guide rail

- ❑ Note installation position

27 - Bolt

- ❑ Renew
- ❑ Types and tightening torque differ depending on version ⇒ page 128

Different types of bolts securing guide rails

Depending on version, different bolt types are used when securing the timing chain guide rails:

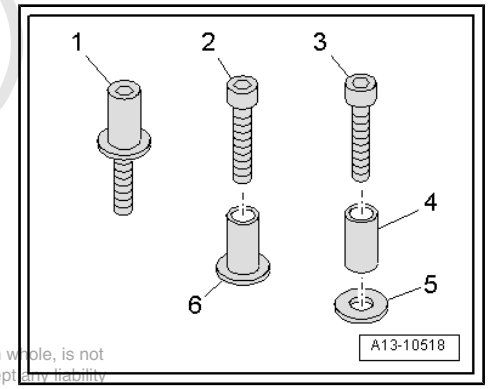

1 - Bolt with shaft
- ♦ Renew
- ♦ 10 Nm + 30° ($^1/_{12}$ turn) further

2 - Bolt with bush -6- with collar
- ♦ Renew
- ♦ 10 Nm + 90° ($^1/_4$ turn) further

3 - Bolt with bush -4- and washer -5-
- ♦ Renew
- ♦ 10 Nm + 90° ($^1/_4$ turn) further

4.4 Removing and installing drive chain for valve gear

Special tools and workshop equipment required

- Used oil collection and extraction unit - V.A.G 1782-
- Locking pin - T40069-
- Locking pin - T40071-

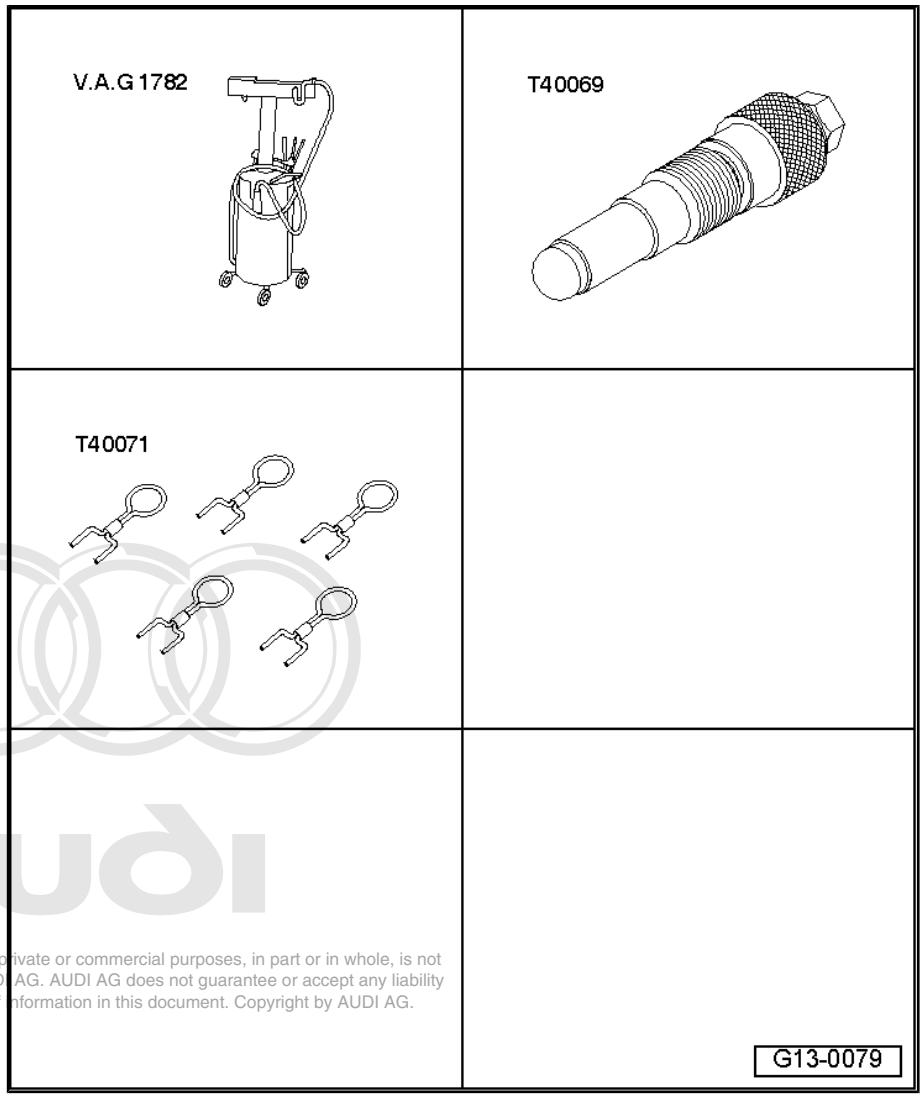

Removing

Note

All cable ties which are released or cut open when removing must be fitted in the same position when installing.

– Remove automatic gearbox ⇒ Rep. gr. 37 .

WARNING

Make sure that the lock carrier is installed and the torque reaction support is secured on the vehicle before performing the following steps.

– Remove damper unit ⇒ page 94 and flywheel ⇒ page 95 on vehicles with multitronic gearbox.

– Remove drive plate on vehicles with automatic gearbox 09L ⇒ page 97 .

– Place used oil collection and extraction unit - V.A.G 1782- under engine.
– Drain off engine oil.
– Remove timing chain covers (left and right) ⇒ page 101 .
– Remove timing chain cover (bottom) ⇒ page 106 .
– Remove camshaft timing chain ⇒ page 116 .
– Remove drive chain for auxiliary drives: vehicles up to 04.2006 ⇒ page 133 , vehicles from 04.2006 onwards ⇒ page 137 .
– Press guide rail of chain tensioner for drive chain in direction of arrow and lock chain tensioner by inserting locking pin - T40071- .
– Mark running direction of chain with paint.
– Remove bolts -2- and -3- and detach chain sprockets together with drive chain and guide rail -1-.

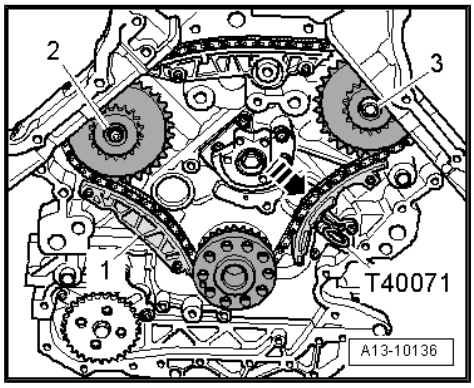

Installing

Installation is carried out in the reverse order; note the following:

- Crankshaft locked in TDC position with locking pin - T40069- .

Note

Fit all cable ties in the original positions when installing.

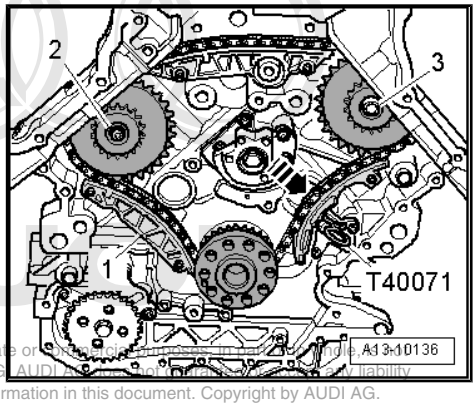

- First install sprocket for camshaft timing chain (left-side) -2-.
- Install guide rail -1- with drive chain fitted.
- Now install sprocket for camshaft timing chain (right-side) -3-.
- Press guide rail of chain tensioner for drive chain in direction of -arrow- and pull locking pin - T40071- out of chain tensioner.
- Install drive chain for auxiliary drives: vehicles up to 04.2006 ⇒ page 133 , vehicles from 04.2006 onwards ⇒ page 137 .
- Install camshaft timing chain ⇒ page 121 .
- Install timing chain cover (bottom) ⇒ page 106 .
- Install timing chain covers (left and right) ⇒ page 101 .
- Install flywheel ⇒ page 95 and damper unit ⇒ page 94 on vehicles with multitronic gearbox.
- Install drive plate on vehicles with automatic gearbox 09L ⇒ page 97 .
- Install automatic gearbox ⇒ Rep. gr. 37 .
- Fill up with engine oil and check oil level ⇒ page 217 .

Tightening torques

Component	Nm
Drive chain sprocket (left-side) to bearing bracket	6 + 60° 1) 2)
Drive chain sprocket (right-side) to cylinder block	30 + 90° 1) 3)
Screw plug in cylinder block	14 4)

- 1) Renew bolts.
- 2) 60° = a sixth of a turn.
- 3) 90° = a quarter of a turn.
- 4) Install with new seal.

4.5 Drive chain for auxiliary drives on vehicles up to 04.2006 - exploded view

1 - Drive chain for auxiliary drives

- ❑ Before removing, mark running direction with paint
- ❑ Removing and installing ⇒ page 133

2 - Drive chain sprocket for oil pump

- ❑ Installation position: Side with lettering faces engine

3 - 30 Nm + 90° (1/4 turn) further

- ❑ Renew

4 - Compression spring

5 - Crankshaft

6 - 15 Nm + 90° (1/4 turn) further

- ❑ Renew

7 - Chain sprocket for balance shaft

- ❑ Installation position: Side with lettering faces gearbox

8 - 6 Nm + 45° (1/8 turn) further

- ❑ Renew

9 - Chain tensioner

- ❑ With guide rail

10 - Seal

- ❑ Depending on version
- ❑ Renew

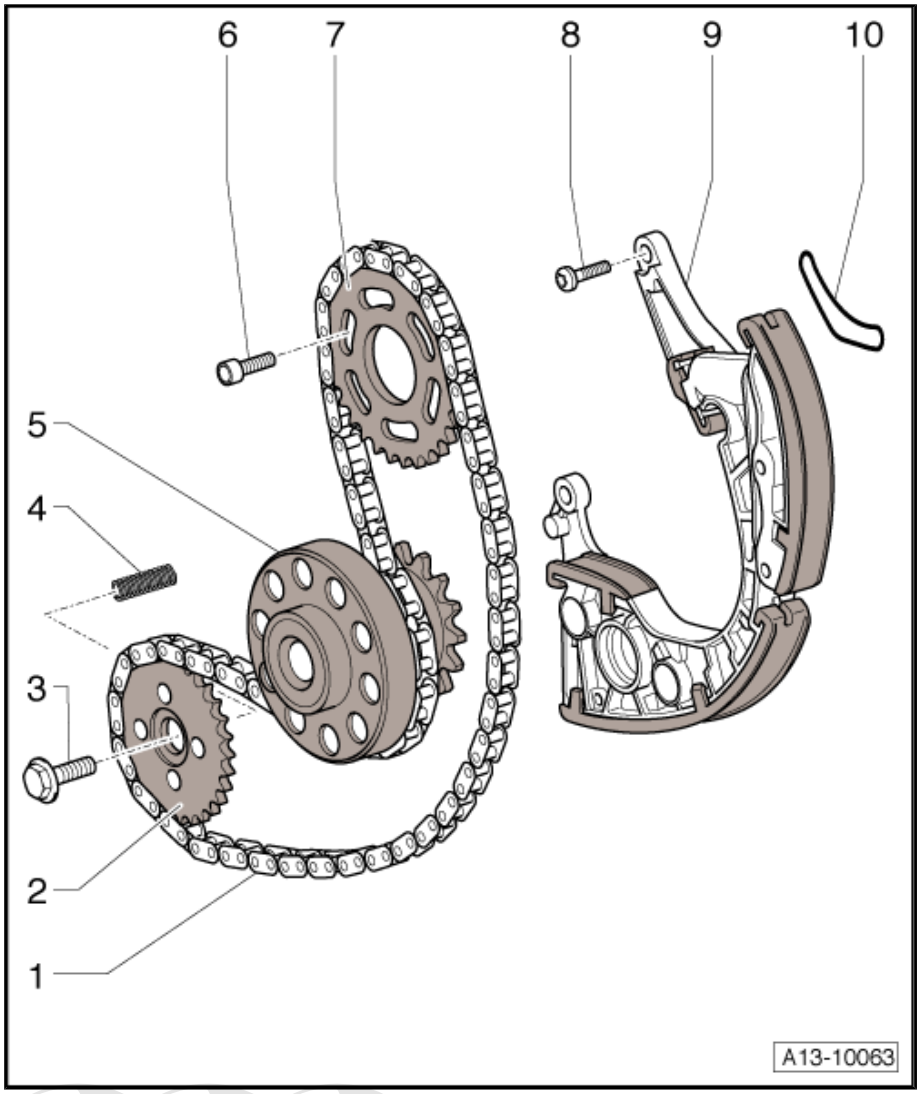

4.6 Removing and installing drive chain for auxiliary drives on vehicles up to 04.2006

Special tools and workshop equipment required

- Used oil collection and extraction unit - V.A.G 1782-
- Special wrench - T40049-
- Locking pin - T40069-
- Locking pin - T40071-
- Drill bit, ∅ 8 mm

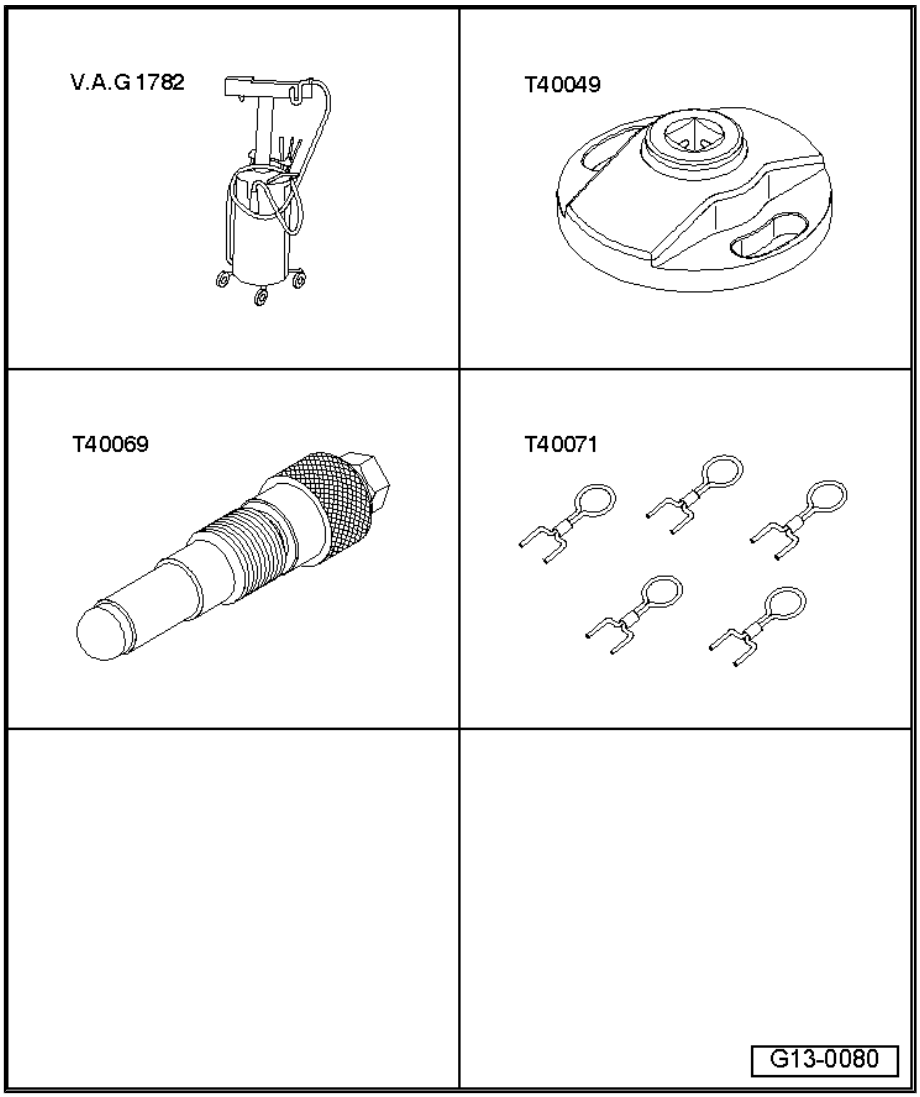

Removing

– Remove automatic gearbox ⇒ Rep. gr. 37 .

> **WARNING**
>
> *Make sure that the lock carrier is installed and the torque reaction support is secured on the vehicle before performing the following steps.*

– Remove damper unit ⇒ page 94 and flywheel ⇒ page 95 on vehicles with multitronic gearbox.

– Remove drive plate on vehicles with automatic gearbox 09L ⇒ page 97 .

– Place used oil collection and extraction unit - V.A.G 1782- under engine.

– Drain off engine oil.

– Remove timing chain cover (bottom) ⇒ page 106 .

Caution

If necessary, place washers under the bolt heads to prevent the chain from being trapped by the bolts.

– Attach special wrench - T40049- onto rear of crankshaft.

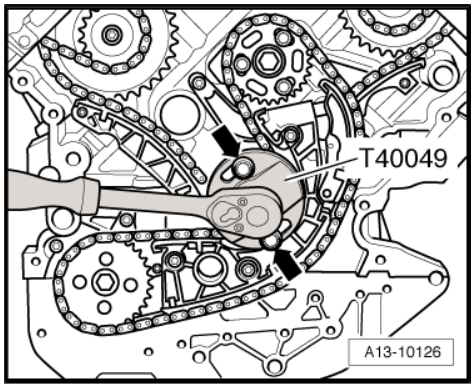

– Unscrew plug -arrow- from cylinder block.

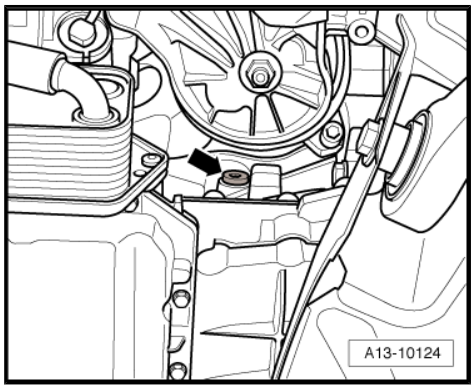

Note

For access to the plug, reach from behind the subframe towards the engine.

WARNING

To avoid any risk of injury, do not rotate the crankshaft while feeling for the TDC hole with your finger.

– Turn crankshaft in normal direction of rotation to TDC position.

– Screw locking pin - T40069- into bore (tightening torque: 20 Nm); if necessary, turn crankshaft backwards and forwards slightly to fully centralise locking pin.

– Mark running direction of drive chain for auxiliary drives with paint.

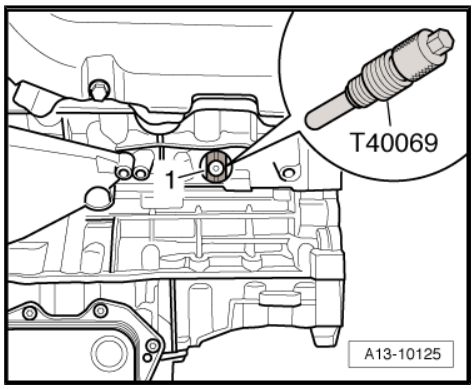

– Press guide rail of chain tensioner in direction of -arrow- and lock chain tensioner by inserting locking pin - T40071- .
– Remove bolts -1 ... 3- and take out chain tensioner, balance shaft sprocket and chain.

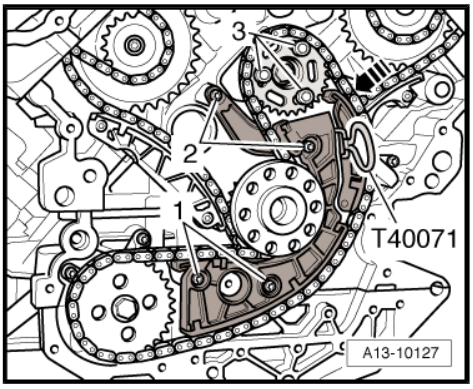

Installing

• Crankshaft -1- locked in TDC position with locking pin - T40069- .

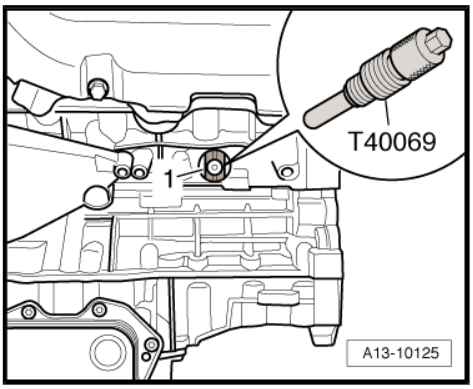

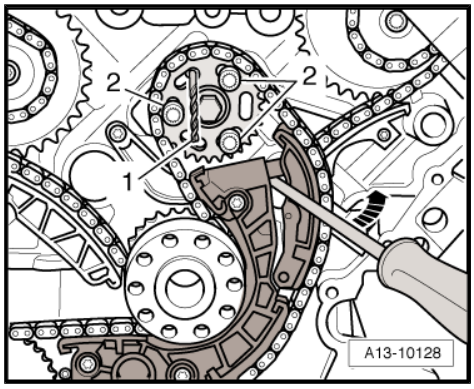

– Install chain tensioner with chain and balance shaft sprocket.

– Lock balance shaft in TDC position with ∅ 8 mm drill bit -item 1-.

• The elongated holes in the balance shaft sprocket must be aligned centrally over the threaded holes in the balance shaft. If necessary move chain one tooth further.

– Tighten bolts for chain tensioner.

– Screw in bolts -2- for chain sprocket, but do not tighten.

• It should just be possible to turn the sprocket on the balance shaft without axial movement.

– Pull locking pin - T40071- out to release chain tensioner.

– Press against guide rail of chain tensioner -arrow- using a screwdriver, and at the same time tighten bolts -2- securing chain sprocket.

– Pull drill bit -item 1- out of balance shaft.

Remaining installation steps are carried out in reverse sequence; note the following:

– Install timing chain cover (bottom) ⇒ page 101 .

– Install timing chain covers (left and right) ⇒ page 101 .

– Install crankshaft oil seal (timing chain end) ⇒ page 98 .

– Install flywheel ⇒ page 95 and damper unit ⇒ page 94 on vehicles with multitronic gearbox.

– Install drive plate on vehicles with automatic gearbox 09L ⇒ page 97 .

– Install automatic gearbox ⇒ Rep. gr. 37 .

– Fill up with engine oil and check oil level ⇒ page 217 .

Tightening torques

Component	Nm
Chain tensioner to cylinder block	6 + 45° [1] [2]
Chain sprocket for balance shaft to balance weight	15 + 90° [1] [3]
Screw plug in cylinder block	14 [4]

• [1] Renew bolts.

• [2] 45° = an eighth of a turn.

• [3] 90° = a quarter of a turn.

• [4] Install with new seal.

4.7 Drive chain for auxiliary drives on vehicles from 04.2006 - exploded view

1 - Crankshaft

2 - Drive chain for auxiliary drives

- ❑ Before removing, mark running direction with paint
- ❑ Removing and installing ⇒ page 137

3 - Drive chain sprocket for oil pump

- ❑ Installation position: Side with lettering faces engine

4 - 30 Nm + 90° ($^1/_4$ turn) further

- ❑ Renew

5 - Compression spring

6 - 15 Nm + 90° ($^1/_4$ turn) further

- ❑ Renew

7 - Chain sprocket for balance shaft

- ❑ Installation position: Side with lettering faces gearbox

8 - Chain tensioner

- ❑ With guide rail

9 - 10 Nm + 45° ($^1/_8$ turn) further

- ❑ Renew

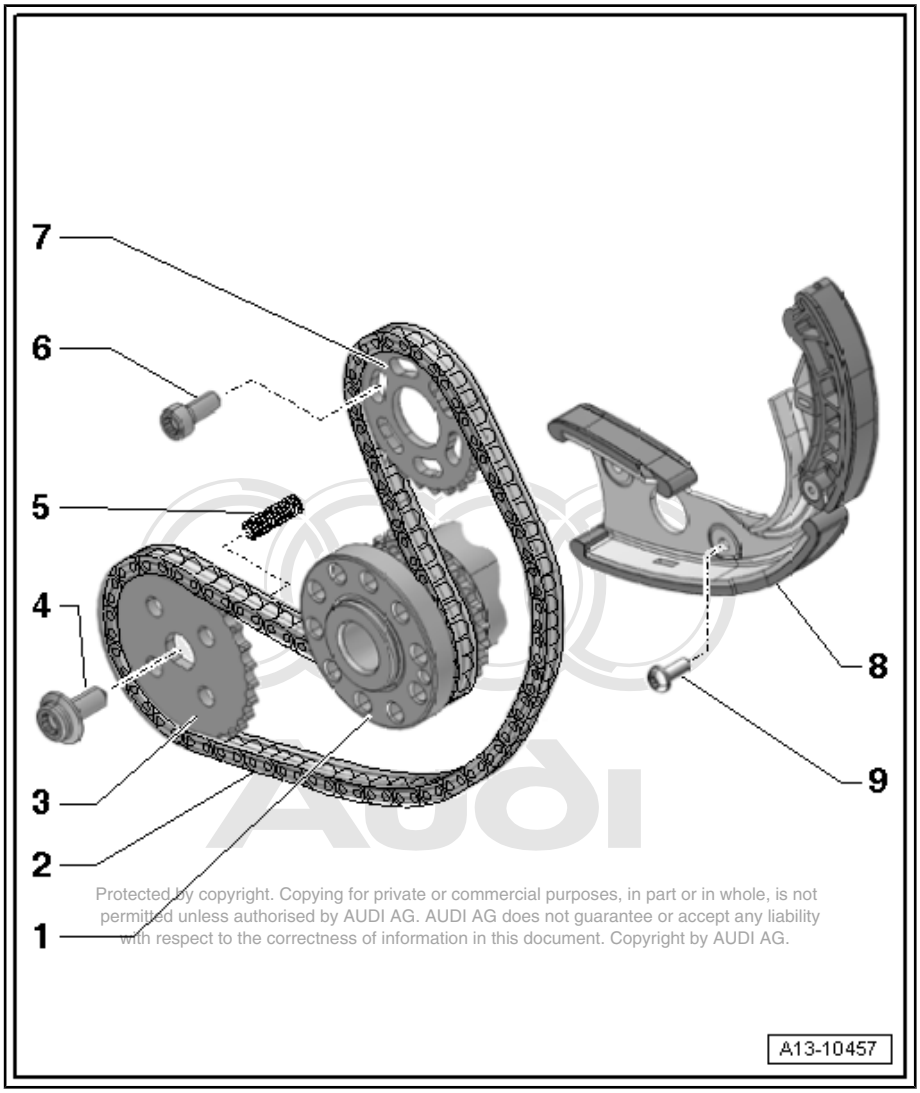

4.8 Removing and installing drive chain for auxiliary drives on vehicles from 04.2006

Special tools and workshop equipment required

- ♦ Used oil collection and extraction unit - V.A.G 1782-

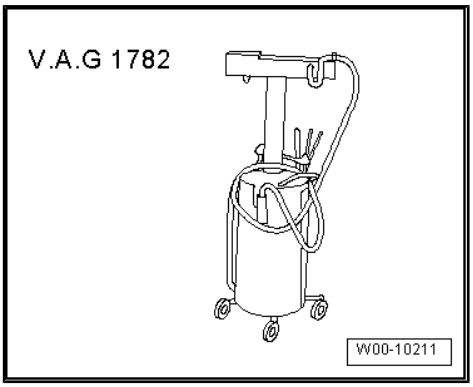

- Special wrench - T40049-

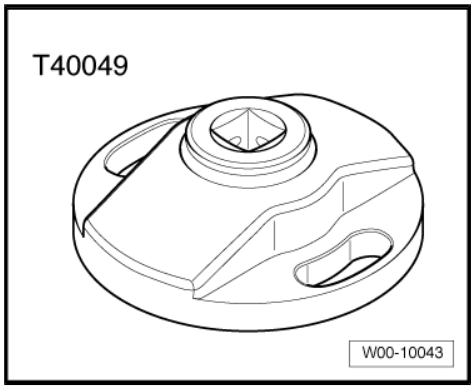

- Locking pin - T40071-

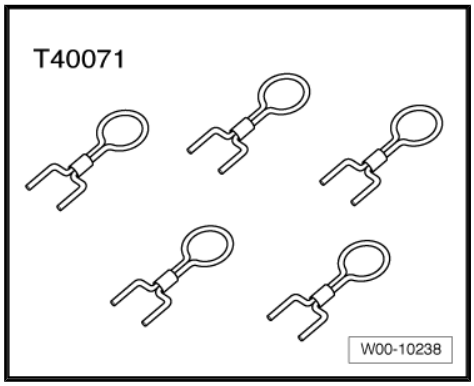

- Drill bit, ∅ 8 mm

Removing

– Remove automatic gearbox ⇒ Rep. gr. 37 .

> ⚠ **WARNING**
>
> ***Make sure that the lock carrier is installed and the torque reaction support is secured on the vehicle before performing the following steps.***

– Remove damper unit ⇒ page 94 and flywheel ⇒ page 95 on vehicles with multitronic gearbox.

– Remove drive plate on vehicles with automatic gearbox 09L ⇒ page 97 .

– Place used oil collection and extraction unit - V.A.G 1782- under engine.

– Drain off engine oil.

– Remove timing chain cover (bottom) ⇒ page 106 .

Caution

If necessary, place washers under the bolt heads to prevent the chain from being trapped by the bolts.

– Attach special wrench - T40049- onto rear of crankshaft.

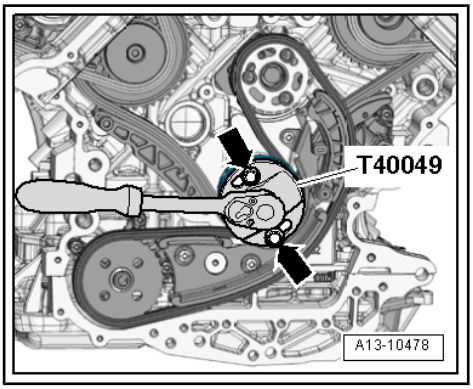

– Unscrew plug -arrow- for “TDC” marking from sump (top section).
– Turn crankshaft in normal direction of rotation to “TDC” position.

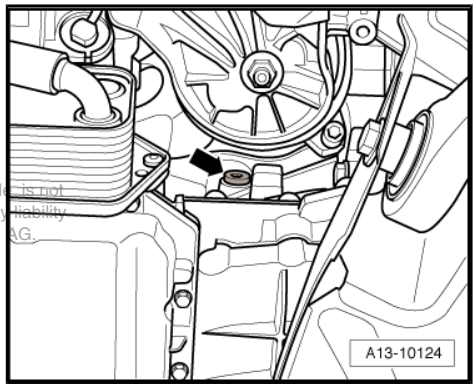

– Screw locking pin - T40069- into bore (tightening torque: 20 Nm); if necessary, turn crankshaft backwards and forwards slightly to fully centralise locking pin.

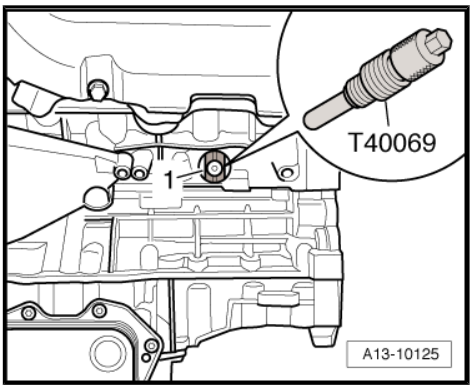

– Mark running direction of drive chain for auxiliary drives with paint.
– Press guide rail of chain tensioner in direction of -arrow- and lock chain tensioner by inserting locking pin - T40071- .
– Unscrew bolts -3- and detach chain sprocket from balance shaft.
– Remove bolts -1- and -2- and take off chain tensioner with chain.

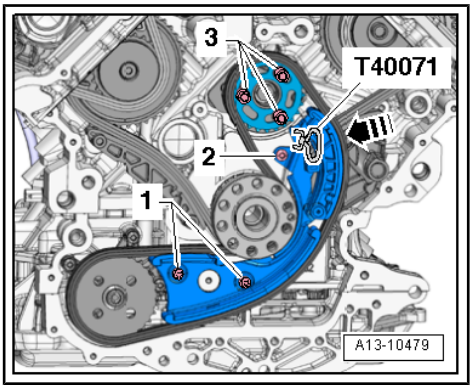

Installing

- Crankshaft -1- locked in “TDC” position with locking pin - T40069- .

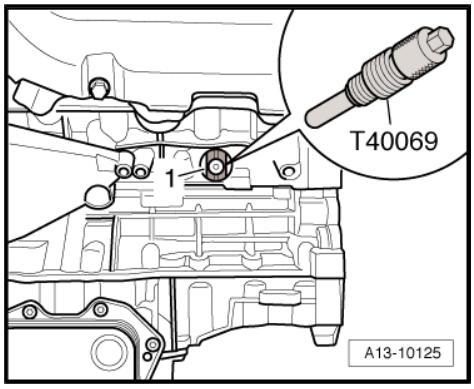

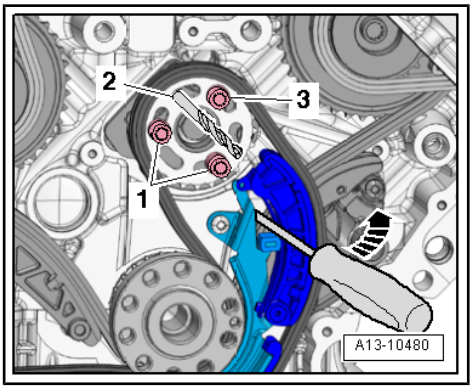

– Install chain tensioner with chain and balance shaft sprocket.

– Wrap insulating tape around tip and shaft of 8 mm ∅ drill bit to avoid cuts.

– Lock balance shaft in “TDC” position with 8 mm ∅ drill bit -item 2-.

• The elongated holes in the balance shaft sprocket must be aligned centrally over the threaded holes in the balance shaft. If necessary move chain one tooth further.

– Tighten bolts for chain tensioner.

– Fit bolts -1- and -3- for chain sprocket but do not tighten.

• It should just be possible to turn the sprocket on the balance shaft without axial movement.

– Pull locking pin - T40071- out to release chain tensioner.

– Press against guide rail of chain tensioner -arrow- using a screwdriver, and at the same time tighten bolts -1- and -3- securing chain sprocket.

– Pull drill bit -2- out of balance shaft.

Remaining installation steps are carried out in reverse sequence; note the following:

– Install timing chain cover (bottom) ⇒ page 106 .

– Install timing chain covers (left and right) ⇒ page 101 .

– Install crankshaft oil seal (gearbox end) ⇒ page 98 .

– Vehicles with multitronic gearbox: Install flywheel ⇒ page 95 and damper unit ⇒ page 94 .

– Vehicles with automatic gearbox 09L: Install drive plate ⇒ page 97 .

– Install gearbox ⇒ Rep. gr. 37 .

– Fill up with engine oil and check oil level ⇒ page 217 .

Tightening torques

Component	Nm
Chain tensioner to cylinder block	10 + 45° 1)2)
Chain sprocket for balance shaft to balance weight	15 + 90° 1)3)
Screw plug in cylinder block	14 4)

• 1) Renew bolts.

• 2) 45° = one eighth turn.

• 3) 90° = one quarter turn.

• 4) Install with new seal.

4.9 Balance shaft - exploded view

1 - Balance shaft

- ❑ Removing and installing ⇒ page 142

2 - 60 Nm

- ❑ Use ∅ 8 mm drill bit as counterhold when loosening and tightening

3 - Balance weight (timing chain end)

- ❑ Can only be fitted on balance shaft in one position.

4 - Bearing plate

5 - 13 Nm

6 - Balance weight (pulley end)

- ❑ Can only be fitted on balance shaft in one position.

7 - 60 Nm

- ❑ Use ∅ 8 mm drill bit as counterhold when loosening and tightening

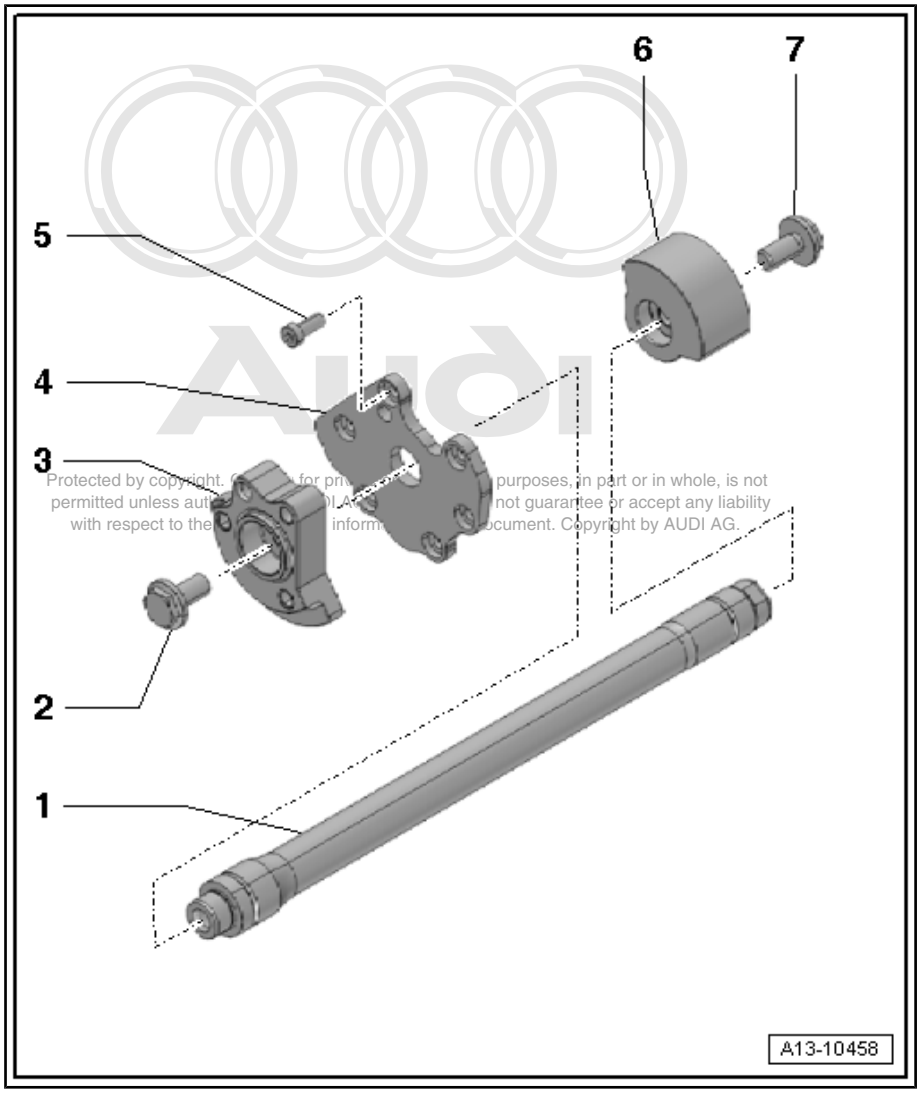

4.10 Removing and installing balance shaft

Special tools and workshop equipment required

- ♦ Used oil collection and extraction unit - V.A.G 1782-

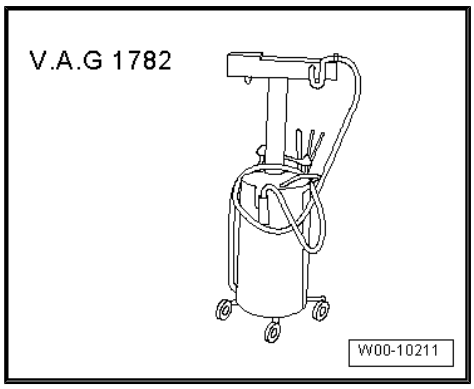

♦ Locking pin - T40069-

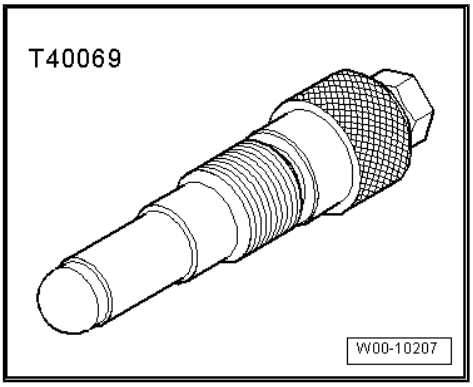

Removing

– Remove automatic gearbox ⇒ Rep. gr. 37 .

> ⚠ **WARNING**
>
> ***Make sure that the lock carrier is installed and the torque reaction support is secured on the vehicle before performing the following steps.***

– Remove damper unit ⇒ page 94 and flywheel ⇒ page 95 on vehicles with multitronic gearbox.

– Remove drive plate on vehicles with automatic gearbox 09L ⇒ page 97 .

– Place used oil collection and extraction unit - V.A.G 1782- under engine.

– Drain off engine oil.

– Remove sealing flange (pulley end) ⇒ page 90 .

– Remove timing chain cover (bottom) ⇒ page 106 .

– Remove drive chain for auxiliary drives: vehicles up to 04.2006 ⇒ page 133 , vehicles from 04.2006 onwards ⇒ page 137 .

– Check that locking pin - T40069- is screwed into hole -1-.

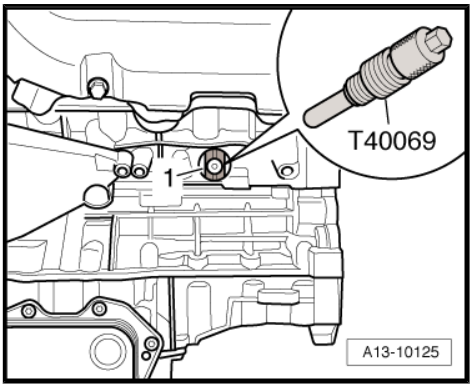

– Hold balance shaft -2- in position at rear of engine using ∅ 8 mm drill bit -item 1-.
– Unscrew bolt -3- and detach balance weight from balance shaft.

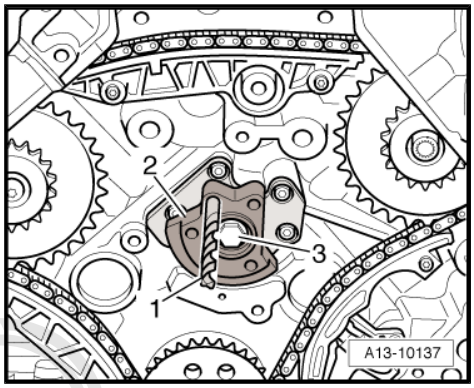

– Unscrew bolt -2- (counterhold balance weight -1- with a suitable pin) and detach balance weight at front of engine from balance shaft.

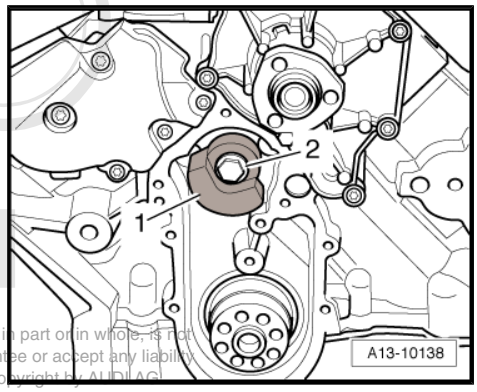

– Unscrew bolts -arrows- and remove bearing plate for balance shaft at rear of engine.
– Pull balance shaft out of cylinder block towards rear.

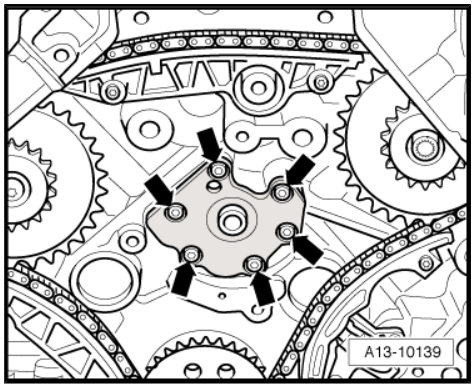

Installing

- Crankshaft -1- locked in TDC position with locking pin -T40069- .

Installation is carried out in the reverse order; note the following:

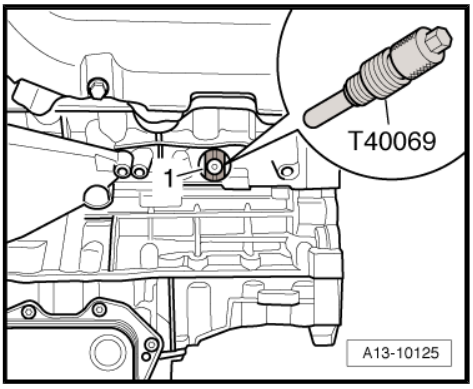

Note

Balance weights can only be fitted on balance shaft in one position.

– Install drive chain for auxiliary drives: vehicles up to 04.2006 ⇒ page 133 , vehicles from 04.2006 onwards ⇒ page 137 .

– Install timing chain cover (bottom) ⇒ page 106 .

– Install sealing flange (pulley end) ⇒ page 90 .

– Install flywheel ⇒ page 95 and damper unit ⇒ page 94 on vehicles with multitronic gearbox.

– Install drive plate on vehicles with automatic gearbox 09L ⇒ page 97 .

– Install automatic gearbox ⇒ Rep. gr. 37 .

– Fill up with engine oil and check oil level ⇒ page 217 .

Tightening torques

Component	Nm
Bearing plate to cylinder block	9
Balance weight to balance shaft	60
Screw plug in cylinder block	14 [1)]
• [1)] Install with new seal.	

5 Removing and installing crankshaft

5.1 Crankshaft - exploded view

Note

When carrying out repairs, secure engine to engine and gearbox support - VAS 6095- ⇒ page 74 .

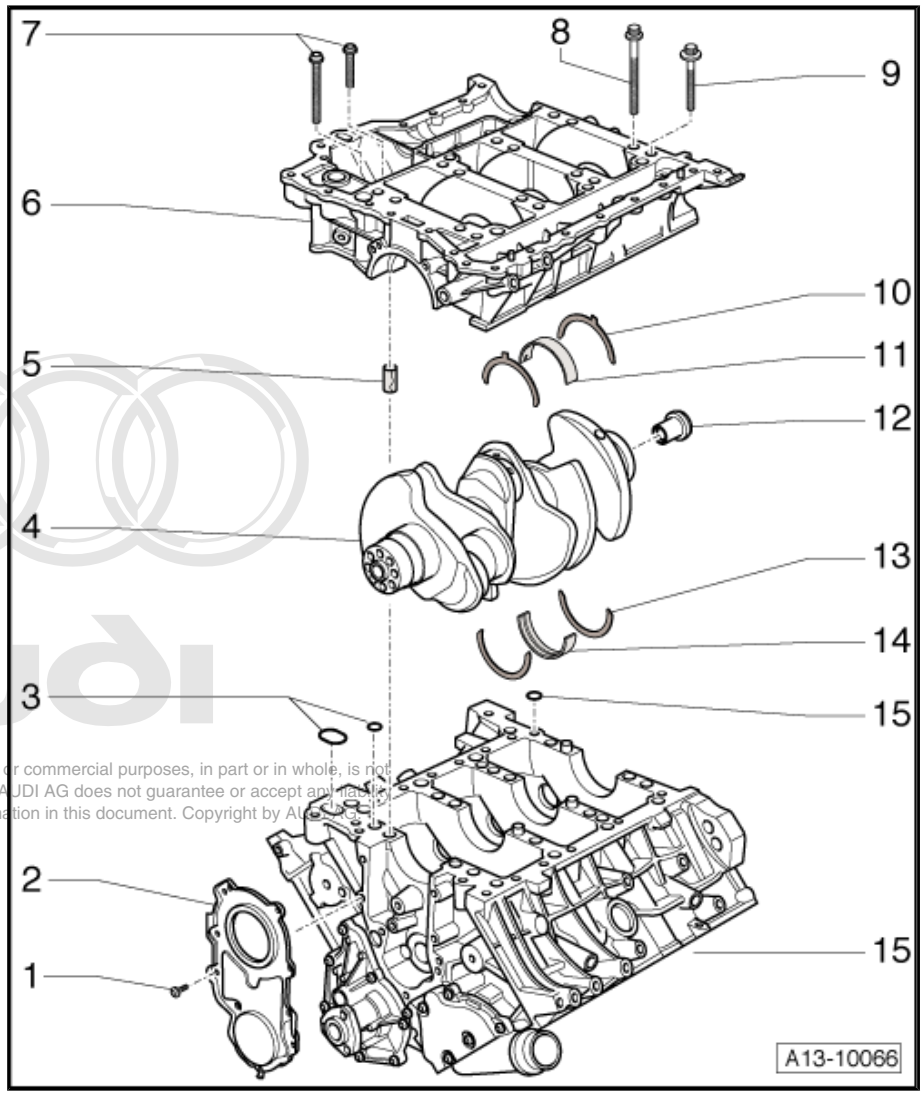

1 - 9 Nm
- ❑ Tighten in stages and in diagonal sequence

2 - Sealing flange (pulley end)
- ❑ Removing and installing ⇒ page 90

3 - Seals
- ❑ Different versions available ⇒ Electronic parts catalogue
- ❑ Renew

4 - Crankshaft
- ❑ Measuring axial clearance ⇒ page 150
- ❑ Measuring radial clearance ⇒ page 151
- ❑ Do not rotate the crankshaft when checking the radial clearance
- ❑ Crankshaft dimensions ⇒ page 150

5 - Dowel sleeve
- ❑ 4x
- ❑ Inserting in retaining frame ⇒ page 148

6 - Retaining frame
- ❑ To remove, detach guide rail ⇒ Item 26 (page 128) for drive chain for valve gear
- ❑ Applying sealant ⇒ page 148
- ❑ Tightening sequence for securing bolts ⇒ page 148

7 - Bolt
- ❑ For sealing surfaces: cylinder block/retaining frame
- ❑ Differing bolt lengths and bolt heads
- ❑ Tightening sequence ⇒ page 148

8 - Bolt (long, large collar)

- ❑ For retaining frame (inner row)
- ❑ Tightening sequence ⇒ page 148

9 - Bolt (short, small collar)

- ❑ For retaining frame (outer row)
- ❑ Tightening sequence ⇒ page 148

10 - Thrust washer

- ❑ Only fitted on 3rd crankshaft bearing
- ❑ Oil grooves face outwards
- ❑ Make sure it engages in retaining frame
- ❑ Measuring axial clearance of crankshaft ⇒ page 150

11 - Bearing shell

- ❑ For retaining frame (without oil groove)
- ❑ Renew used bearing shells
- ❑ Note installation position
- ❑ Install new bearing shells for retaining frame with correct coloured markings ⇒ page 150

12 - Centralising disc

- ❑ For vehicles with automatic gearbox 09L ⇒ page 147

13 - Thrust washer

- ❑ Only fitted on 3rd crankshaft bearing
- ❑ Oil grooves face outwards
- ❑ Make sure it engages in cylinder block
- ❑ Measuring axial clearance of crankshaft ⇒ page 150

14 - Bearing shell

- ❑ For cylinder block (with oil groove)
- ❑ Renew used bearing shells
- ❑ Note installation position
- ❑ Install new bearing shells for the cylinder block with the correct coloured markings ⇒ page 149

15 - O-ring or seal

- ❑ Depending on version ⇒ Electronic parts catalogue
- ❑ Renew

16 - Cylinder block

Centralising disc for drive plate on vehicles with automatic gearbox 09L

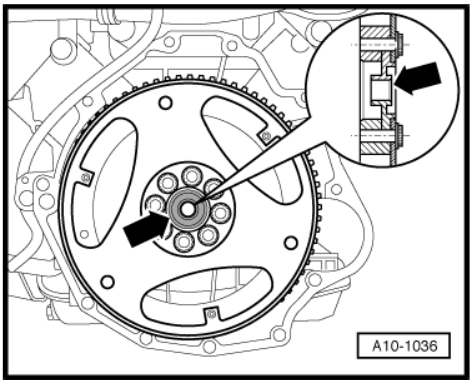

Note

In vehicles with automatic gearbox the drive plate is bolted to the crankshaft with a centralising disc -arrow-.

Applying sealant to retaining frame, position of dowel sleeves

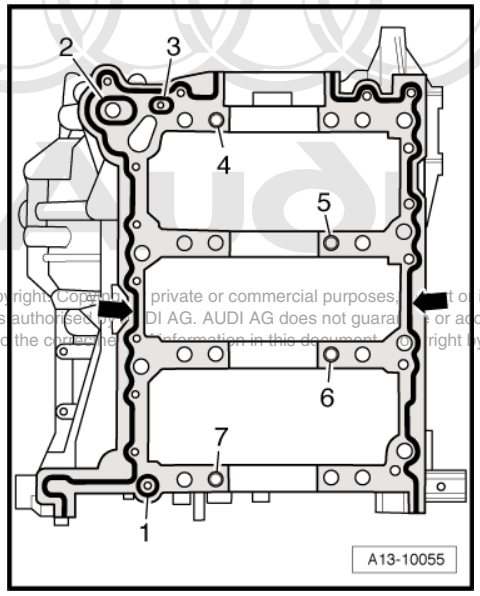

– Clean sealing surfaces, they must be free of oil and grease at top and bottom.

– Apply the beads of sealant -arrows- onto the clean sealing surfaces of the retaining frame as illustrated.

• The groove on the sealing surface must be completely filled with sealant.

• The beads of sealant must project 1.5 … 2.0 mm above the sealing surface.

– Fit seals -1 … 3-.

Note

On some versions the seals -2- and -3- are connected together.

– Check that dowel sleeves -4 ... 7- are inserted in retaining frame at positions shown in illustration.

Installing retaining frame

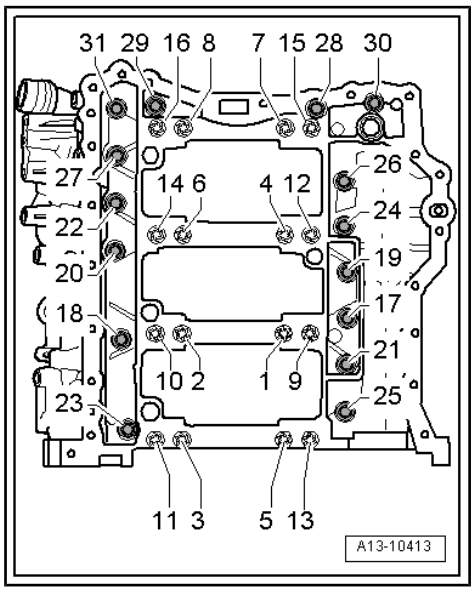

– Renew bolts -1 … 16- for retaining frame.

Note

Use old bolts when measuring radial clearance.

– Install long bolts in inner row on retaining frame.

– Tighten bolts -1 … 31- in 3 stages as follows:

1. Tighten bolts in the sequence -1 ... 16- to 50 Nm.
2. Turn bolts 90° further in the sequence -1 ... 16-.
3. Tighten bolts for sealing surfaces (retaining frame / cylinder block) in the sequence -17 ... 31- to 23 Nm.

Matching crankshaft bearing shells to bearings in cylinder block

- Bearing shells of the correct thickness are matched to the bearings in the cylinder block at the factory. Coloured dots on the side of the bearing shells are used to identify the bearing shell thickness.
- The allocation of the bearing shells to the bearing positions in the cylinder block is indicated by a code letter at the relevant bearing on the retaining frame.

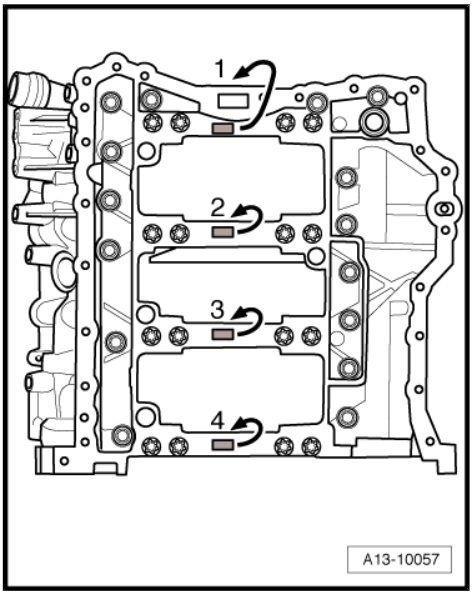

Up to engine number BPK 002 000:

For engines up to engine number BPK 002 000, please note that on bearing No. 1 (front) the code letters on the retaining frame and the corresponding colour codes for the bearing shells are not the same as for the other bearings:

Bearing No.	Code letter on retaining frame	Colour coding of bearing
1	G =	Red
	B =	Yellow
	S =	Blue
2 … 4	G =	Yellow
	B =	Blue
	S =	Black

From engine number BPK 002 001:

Code letter on retaining frame	Colour coding of bearing
R =	Red
G =	Yellow
B =	Blue
S =	Black

Matching crankshaft bearing shells to bearings in retaining frame

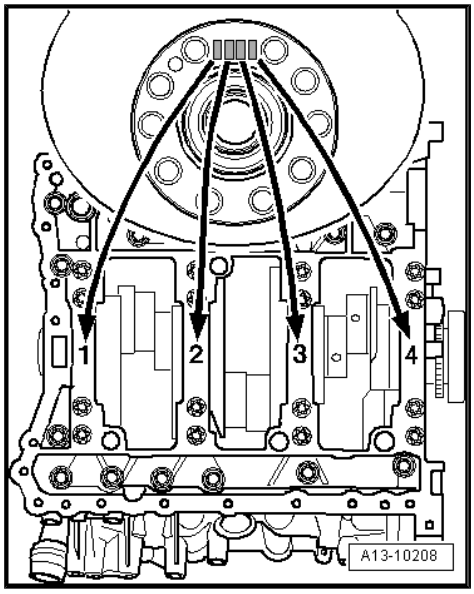

- Bearing shells of the correct thickness are matched to the bearings in the retaining frame at the factory. Coloured dots on the side of the bearing shells are used to identify the bearing shell thickness.
- The allocation of the bearing shells to the bearing positions in the retaining frame is indicated by a sequence of letters on the flywheel flange on the crankshaft. The first letter in the sequence stands for bearing “1”, the second letter for bearing “2”, etc.

Up to engine number BPK 002 000:

For engines up to engine number BPK 002 000, please note that on bearing No. 1 (front) the code letters on the crankshaft and the corresponding colour codes for the bearing shells are not the same as for the other bearings:

Bearing No.	Letter on crankshaft	Colour coding of bearing
1	G =	Red
	B =	Yellow
	S =	Blue
2 … 4	G =	Yellow
	B =	Blue
	S =	Black

From engine number BPK 002 001:

Letter on crankshaft	Colour coding of bearing
R =	Red
G =	Yellow
B =	Blue
S =	Black

5.2 Crankshaft dimensions

Honing dimension (in mm)	Crankshaft main bearing journal ∅	Crankshaft conrod journal ∅
Basic dimension	65.00 – 0.022 – 0.042	56.00 – 0.022 – 0.042

5.3 Measuring axial clearance

Special tools and workshop equipment required

- Universal dial gauge bracket - VW 387-

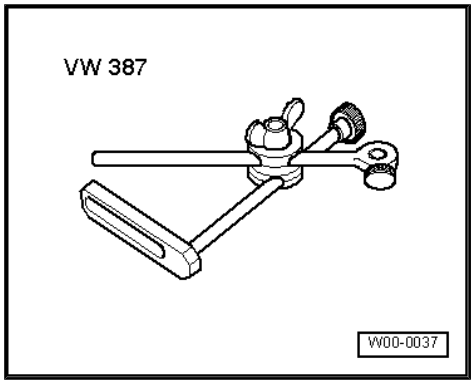

♦ Dial gauge - VAS 6079-

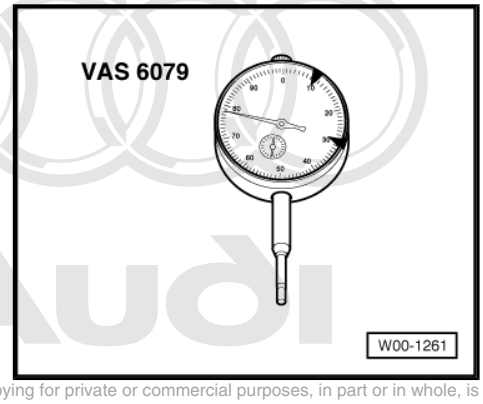

Procedure

– Bolt dial gauge - VAS 6079- with universal dial gauge bracket - VW 387- onto cylinder block and set it against crank web.

– Press crankshaft against dial gauge by hand and set gauge to -0-.

– Push crankshaft away from dial gauge and read off value:

• Axial clearance: 0.15 ... 0.25 mm

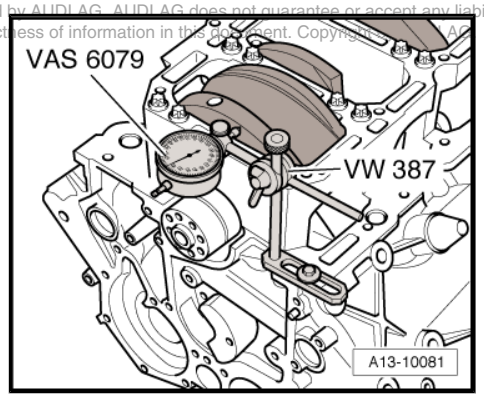

5.4 Measuring radial clearance

Special tools and workshop equipment required

♦ Plastigage

Procedure

Note

Renew used bearings.

– Remove retaining frame and clean bearing journals.

– Place a length of Plastigage corresponding to the width of the bearing on the bearing journal or bearing shell.

• The Plastigage must be positioned in the centre of the bearing shell

– Fit retaining frame and secure with old bolts ⇒ page 148 without rotating crankshaft.

– Remove retaining frame once more.

– Compare width of Plastigage with measurement scale:

• Radial clearance (new): 0.015 ... 0.055 mm

• Radial clearance (wear limit): 0.08 mm

– When carrying out final assembly, renew bolts.

6 Dismantling and assembling pistons and conrods

6.1 Pistons and conrods - exploded view

Note

Oil spray jet for piston cooling ⇒ page 155 .

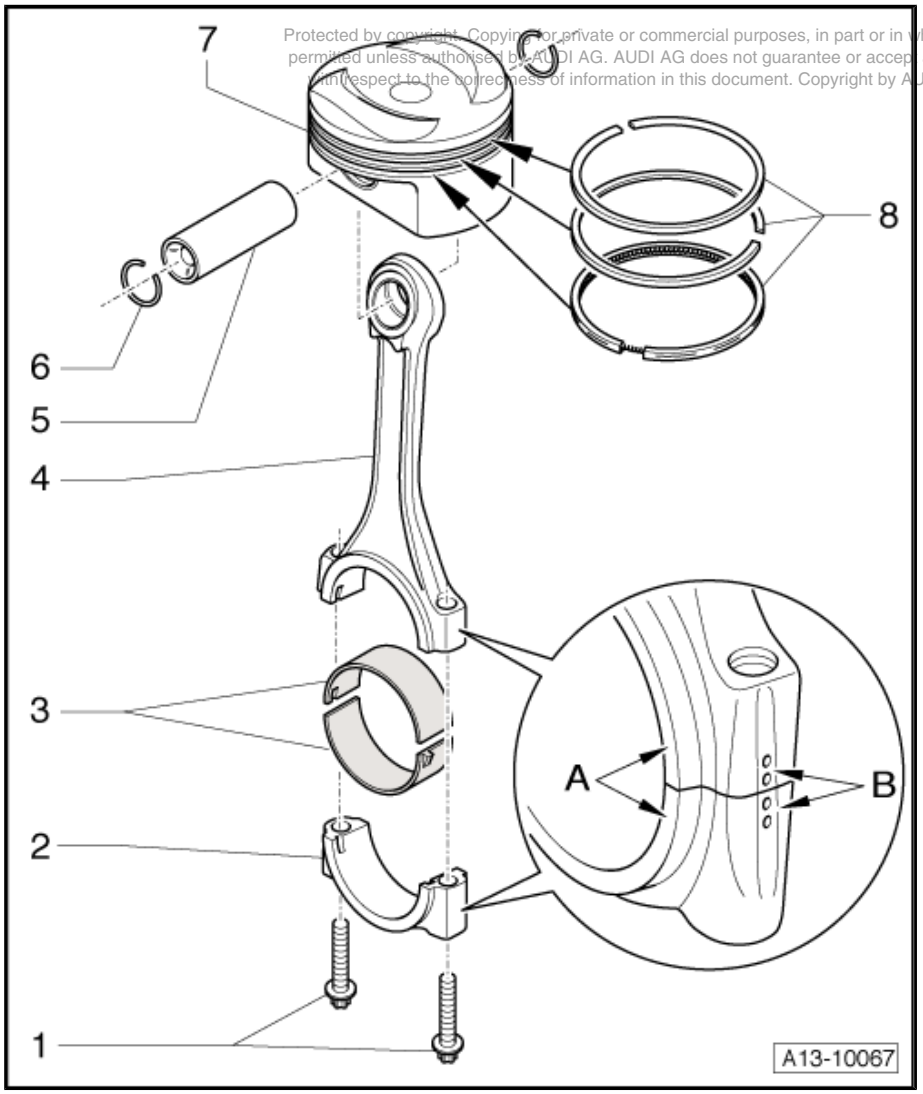

1 - Conrod bolt, 30 Nm + 90° (1/4 turn) further

- ❑ Renew
- ❑ Lubricate threads and contact surface
- ❑ Use old bolts when measuring radial clearance

2 - Conrod bearing cap

- ❑ Do not interchange
- ❑ Mark cylinder allocation with a coloured pen -B- ⇒ page 155
- ❑ Note when fitting bearing cap: the wide contact shoulder -A- must point towards same side on conrod and conrod bearing cap
- ❑ Installation position of conrod pairs ⇒ page 155

3 - Bearing shell

Different types may be fitted, depending on version:

- ❑ Lower bearing shell (for bearing cap); identification: shell is a dark colour. Upper bearing shell (for conrod): more wear-resistant material; identification: shell is a light colour.

or

- ❑ Bearing shells are the same: no special identification
- ❑ Ensure that retaining lugs are securely seated.
- ❑ Renew used bearing shells
- ❑ Measuring radial clearance ⇒ page 157

4 - Conrod

- ❑ Only renew as a complete set
- ❑ Mark cylinder allocation in colour -B- ⇒ page 155
- ❑ Note when fitting bearing cap: the wide contact shoulder -A- must point towards same side on conrod and conrod bearing cap
- ❑ Installation position of conrod pairs ⇒ page 155

5 - Piston pin

- ❑ Removing and installing ⇒ “6.3 Removing and installing pistons”, page 155

6 - Circlip

- ❑ Renew

7 - Piston

- ❑ Removing and installing ⇒ page 155
- ❑ Installation position and allocation of piston/cylinder ⇒ page 154
- ❑ Arrow on piston crown points to pulley end
- ❑ Checking ⇒ page 154
- ❑ Install using piston ring clamp
- ❑ Piston and cylinder dimensions ⇒ page 155
- ❑ Checking cylinder bore ⇒ page 154

8 - Piston rings

- ❑ Offset gaps by 120°
- ❑ Use piston ring pliers to remove and install
- ❑ Marking “TOP” or side with identification mark must face piston crown
- ❑ Checking ring gap ⇒ page 153
- ❑ Checking ring-to-groove clearance ⇒ page 153

Checking piston ring gap

– Insert ring at right angle to cylinder wall from above and push down into lower cylinder opening approx. 15 mm from bottom of cylinder. To do so, use a piston without rings.

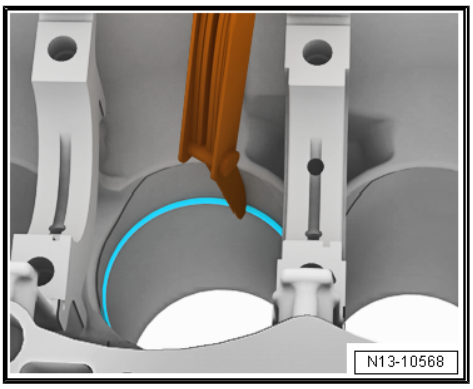

Piston ring Dimensions in mm	New	Wear limit
1st compression ring	0.20 … 0.35	0.8
2nd compression ring	0.50 … 0.70	1.0
Oil scraper ring	0.20 … 0.40	0.8

Checking ring-to-groove clearance

– Clean groove in piston before checking clearance.

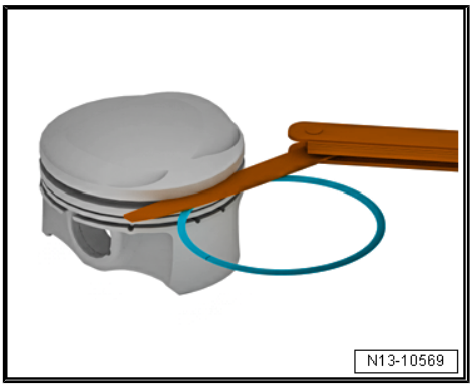

Piston ring Dimensions in mm	New	Wear limit
Compression rings	0.02 … 0.08	0.20
Oil scraper ring	0.02 … 0.08	0.15

Checking piston

– Using a micrometer (75 ... 100 mm), measure approx. 10 mm from the lower edge, perpendicular to the piston pin axis.

• Maximum deviation from nominal dimension: 0.04 mm.

Nominal dimension
⇒ “6.2 Piston and cylinder dimensions”, page 155 .

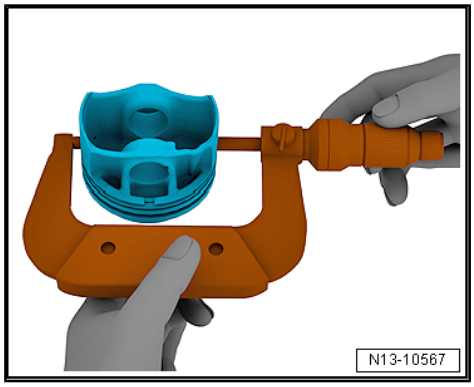

Checking cylinder bore

– Use 50 ... 100 mm internal dial gauge to take measurements at 3 points in transverse direction -A- and longitudinal direction -B-.

• Maximum deviation from nominal dimension: 0.08 mm.

Nominal dimension
⇒ “6.2 Piston and cylinder dimensions”, page 155 .

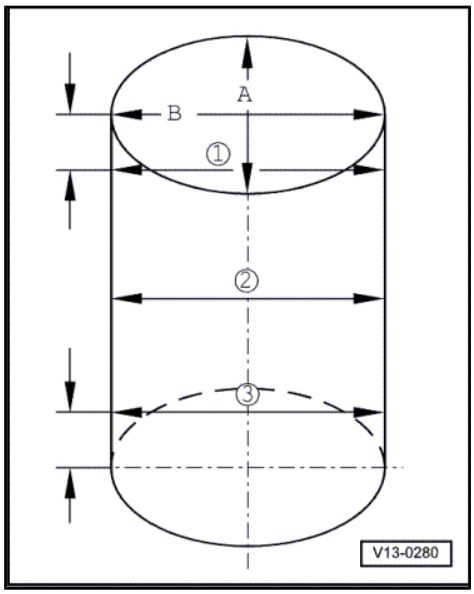

Piston installation position and piston/cylinder allocation

Caution

Do not damage the coating of the piston crown.

- *If you intend to re-install used pistons, mark the cylinder number on the piston crown using paint. Do not attempt to mark the piston crown with a centre punch or by making a notch or similar.*

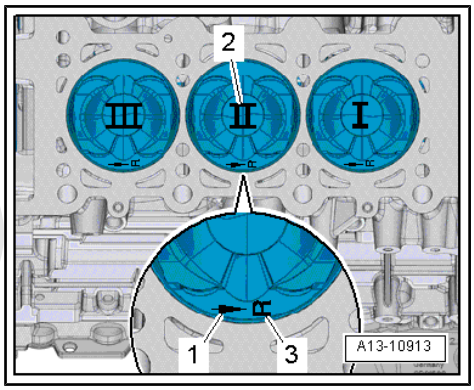

Installation position:

1 - Arrows on piston crowns point to pulley end.

2 - Markings must be made indicating cylinder allocation

3 - Cylinder allocation markings: “R” = right, “L” = left

Marking conrods

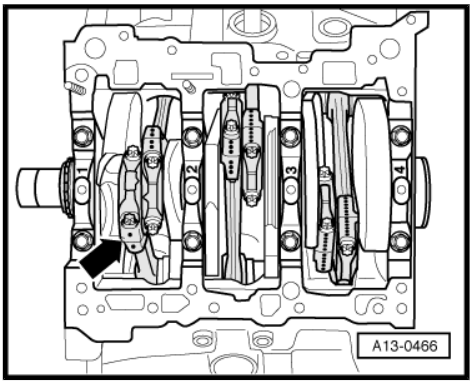

Note

- *Only renew conrods as a complete set.*
- *Do not interchange conrod bearings.*

– Prior to removal, use a coloured pen to mark conrod and conrod bearing cap relative to one another, as well as to cylinder -arrow-.

Conrod installation position

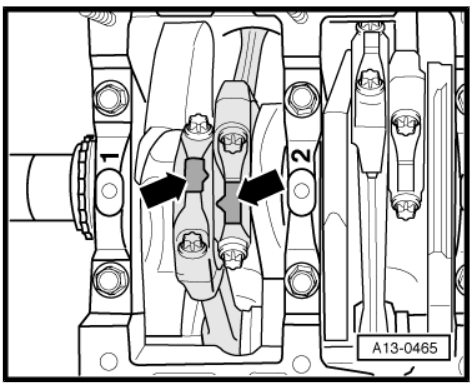

- The cast lugs -arrows- at ground surfaces of conrod pairs 1 and 2, 3 and 4, and 5 and 6 must face one another.

Oil spray jet for piston cooling

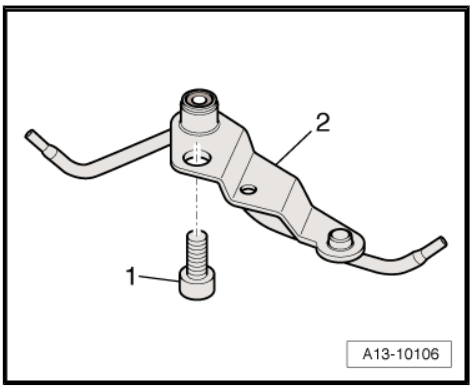

1 - Apply locking fluid when installing bolt (tightening torque 9 Nm); refer to ⇒ Electronic parts catalogue

2 - Oil spray jet with spray nozzle valve (opening pressure: 2 ... 2.4 bar)

6.2 Piston and cylinder dimensions

Honing dimension (in mm)	Piston ∅	Cylinder bore ∅
Basic dimension	84.490	84.51
• Dimensions including coating (thickness 0.02 mm). The coating will wear down in service.		

6.3 Removing and installing pistons

Special tools and workshop equipment required

♦ Drift - VW 222 A-

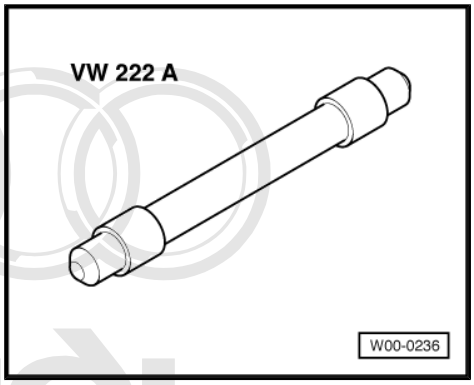

♦ Piston ring clamp, commercially available

Removing

- Engine secured to engine and gearbox support - VAS 6095- ⇒ page 74 .

– Remove cylinder head ⇒ page 164 .

– Remove upper section of sump ⇒ page 203 .

– Mark installation position and matching of conrod bearing caps to cylinder and to conrods for re-installation ⇒ page 155 .

– Unbolt conrod bearing caps.

– Pull out pistons upwards with conrods.

Note

If piston pin is difficult to remove, heat piston to approx. 60 °C.

– Take circlip out of piston pin boss.

– Use drift - VW 222 A- to drive out piston pin.

Installing

Installation is carried out in the reverse order; note the following:

- Tightening torques
  ⇒ “6.1 Pistons and conrods - exploded view”, page 152

Note

Renew the bolts tightened with specified tightening angle.

– Oil running surfaces of bearing shells.

– Install pistons using piston ring clamp.

Installation position:

- Pistons ⇒ page 154
- Conrods ⇒ page 155

– Install conrod bearing caps according to markings.

– Install sump (upper section) ⇒ page 203 .

– Install cylinder head ⇒ page 164 .

6.4 Checking radial clearance of conrod bearings

Special tools and workshop equipment required

♦ Plastigage

Test sequence

– Remove conrod bearing cap. Clean bearing cap and bearing journal.

– Place a length of Plastigage corresponding to the width of the bearing on the bearing journal or bearing shell.

– Fit conrod bearing caps and secure with old bolts ⇒ Item 1 (page 152) without rotating crankshaft.

– Remove conrod bearing caps once more.

– Compare width of Plastigage with measurement scale:

• Radial clearance (new): 0.010 ... 0.052 mm

• Radial clearance (wear limit): 0.12 mm

– When carrying out final assembly, renew bolts.

15 – Cylinder head, valve gear

1 Removing and installing cylinder head

1.1 Cylinder head - exploded view

Note

- *Illustration shows left cylinder head.*
- *Both cylinder heads can be removed and installed with the engine still installed.*

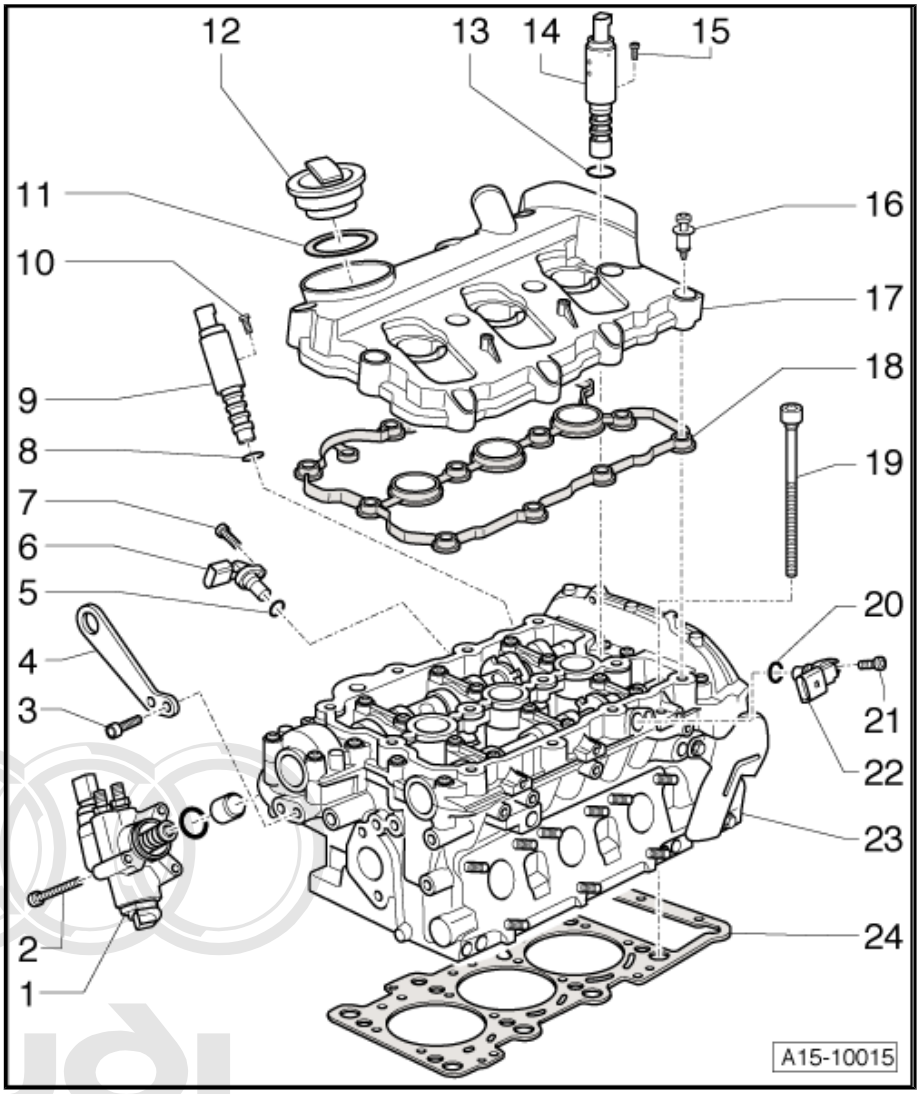

1 - High-pressure pump

- ❑ Removing and installing ⇒ page 281

2 - 9 Nm

3 - 20 Nm

4 - Lifting eye

- ❑ Illustration does not correspond to current version

5 - O-ring

- ❑ Renew

6 - Hall sender for inlet camshaft

- ❑ Cylinder bank 1 (right-side): Hall sender - G40-
- ❑ Cylinder bank 2 (left-side): Hall sender 2 - G163-

7 - 8 Nm + 90° (1/4 turn) further

- ❑ Renew

8 - O-ring

- ❑ Renew

9 - Solenoid valve for camshaft control (inlet side)

- ❑ Cylinder bank 1 (right-side): camshaft control valve 1 - N205-
- ❑ Cylinder bank 2 (left-side): camshaft control valve 2 - N208-

10 - 2.5 Nm

11 - Seal

- ❑ Renew if damaged or leaking

12 - Sealing cap

13 - O-ring

- ❑ Renew

14 - Solenoid valve for camshaft control (exhaust side)

- ❑ Cylinder bank 1 (right-side): exhaust camshaft control valve 1 - N318-
- ❑ Cylinder bank 2 (left-side): exhaust camshaft control valve 2 - N319-

15 - 2.5 Nm

16 - Special bolt, 9 Nm

- ❑ Renew if damaged or leaking
- ❑ Note correct sequence when tightening ⇒ page 162

17 - Cylinder head cover

- ❑ Removing and installing: left-side ⇒ page 161 , right-side ⇒ page 162

18 - Gasket for cylinder head cover

- ❑ Renew if damaged or leaking

19 - Cylinder head bolt

- ❑ Renew

- ❑ Note correct sequence when loosening ⇒ page 167
- ❑ Note correct sequence when tightening ⇒ page 168

20 - O-ring

- ❑ Renew

21 - 8 Nm + 90° (1/4 turn) further

- ❑ Renew

22 - Hall sender for exhaust camshaft

- ❑ Cylinder bank 1 (right-side): Hall sender 3 - G300-
- ❑ Cylinder bank 2 (left-side): Hall sender 4 - G301-

23 - Cylinder head

- ❑ Removing ⇒ page 164
- ❑ Checking for distortion ⇒ page 160
- ❑ Machining limit ⇒ page 160
- ❑ Installing ⇒ page 167
- ❑ If renewed, change coolant and engine oil

24 - Cylinder head gasket

- ❑ Renewing ⇒ "1.4 Removing and installing cylinder head", page 164
- ❑ Installation position: part number must face cylinder head
- ❑ If renewed, change coolant and engine oil

Checking cylinder head for distortion

– Use straight edge 500 mm - VAS 6075- and feeler gauge to measure cylinder head for distortion at several points.

• Max. distortion: 0.05 mm

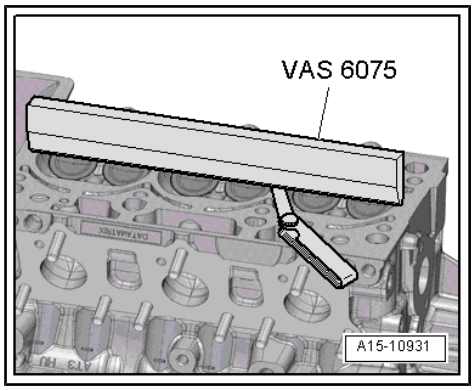

Cylinder head machining limit

Machining of the cylinder head (surface grinding) is only permissible down to the minimum dimension -a-.

• Minimum dimension: -a- = 139.20 mm

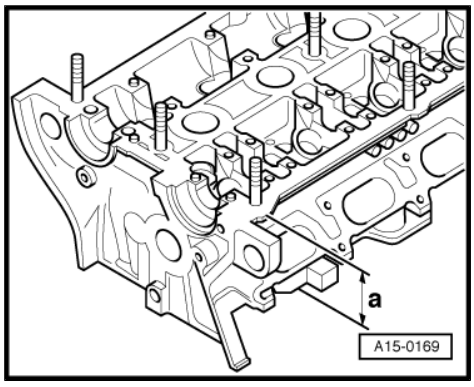

1.2 Removing and installing cylinder head cover (left-side)

Removing

– Pull off engine cover panel (rear) -arrows-.

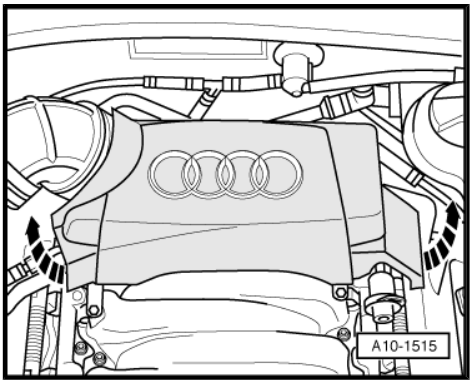

– Pull off engine cover panel (front) -arrows-.

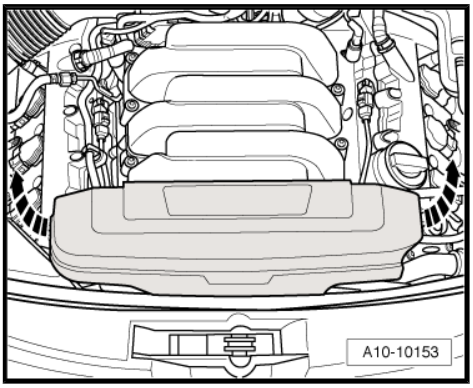

– Unplug electrical connectors.

1 - Variable intake manifold position sender - G513-

2 - Fuel pressure sender for low pressure - G410-

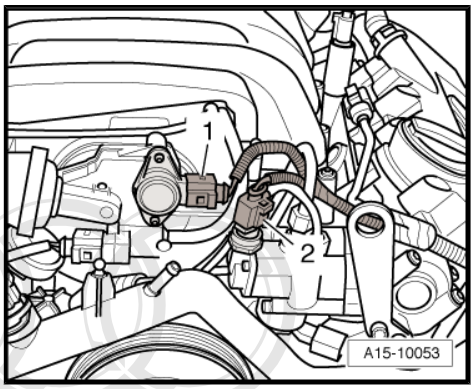

– Unplug electrical connectors.

1 - Hall sender 2 - G163-

2 - Camshaft control valve 2 - N208-

3 - Exhaust camshaft control valve 2 - N319-

4 - Hall sender 4 - G301-

– Unscrew bolts -arrows- and unplug electrical connectors at ignition coils.

– Move wiring harness clear.

– Remove ignition coils ⇒ page 320 .

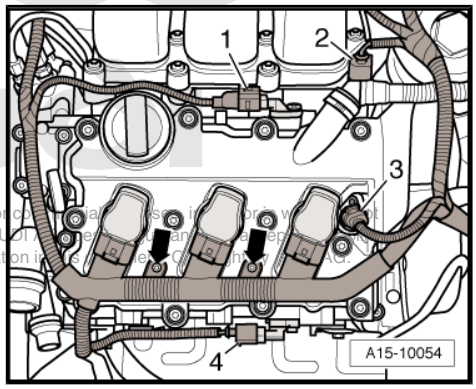

– Detach crankcase breather hose -arrow-.

– Unscrew bolts for cylinder head cover (left-side) in the sequence -12 ... 1-.

– Remove bolts and take off cylinder head cover.

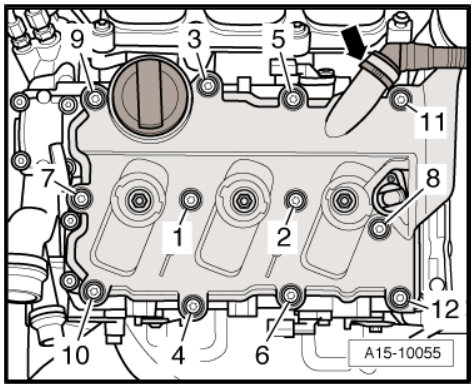

Installing

Installation is carried out in the reverse order; note the following:

Note

- *Renew cylinder head cover gaskets if damaged.*
- *Renew cylinder head cover bolts if gasket is damaged.*

– Clean sealing surfaces; they must be free of oil and grease.

– Tighten bolts for cylinder head cover in the sequence -1 ... 12-.

– Install ignition coils ⇒ page 320 .

Tightening torque

Component	Nm
Cylinder head cover to cylinder head	9

1.3 Removing and installing cylinder head cover (right-side)

Removing

– Pull off engine cover panel (rear) -arrows-.

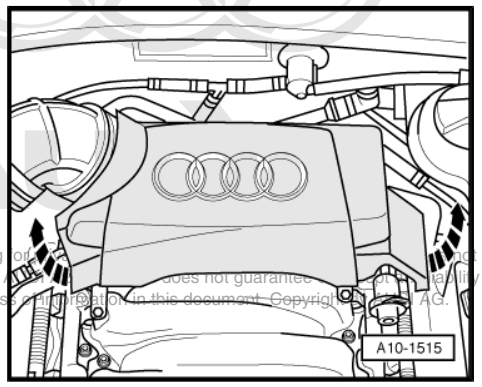

– Pull off engine cover panel (front) -arrows-.

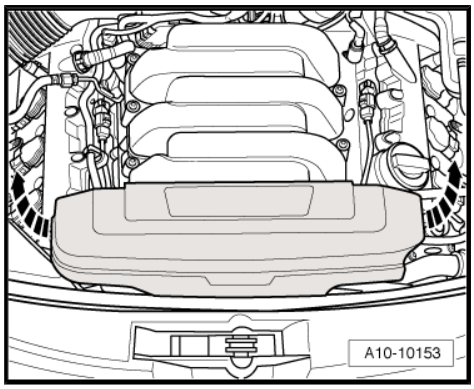

– Pull non-return valve -2- off connection at air intake hose.
– Unclip vacuum line -1- and fuel line -3- from retainer on air intake hose.
– Release hose clips -arrows- and remove air intake hose.

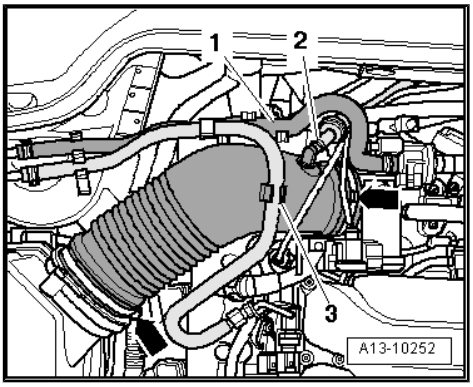

– Unplug electrical connector -1-.
– Detach vacuum hose -2-.
– Remove bolts -arrows-.
– Take out air cleaner housing.

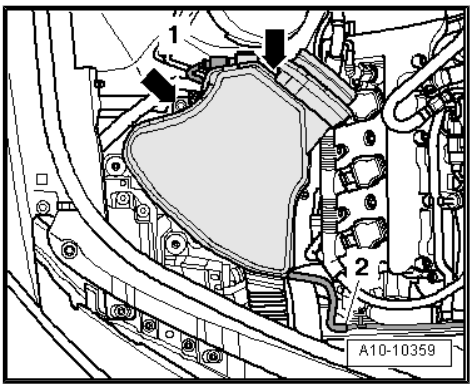

– Unplug electrical connectors.

1 - Coolant temperature sender - G62-
2 - Variable intake manifold flap change-over valve - N239-

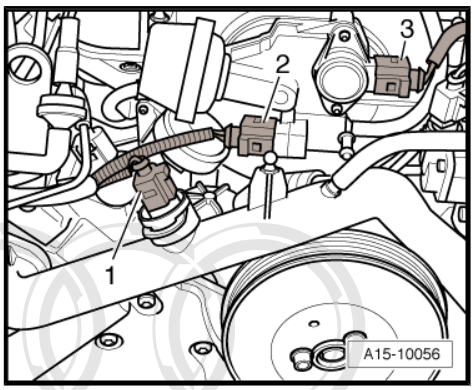

– Unplug electrical connectors.

1 - Exhaust camshaft control valve 1 - N318-
3 - Hall sender - G40-
4 - Intake manifold flap potentiometer - G336-
5 - Hall sender 3 - G300-

– Unclip vacuum hose (leading to brake servo) on cylinder head cover.
– Unscrew bolts -arrows- and unplug electrical connectors at ignition coils.
– Move wiring harness clear.
– Remove ignition coils ⇒ page 320 .

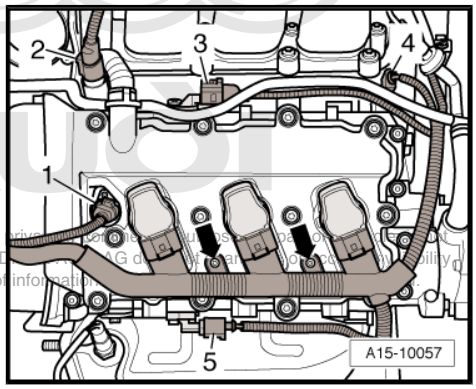

– Detach crankcase breather hose -arrow-.
– Unscrew bolts for cylinder head cover (right-side) in the sequence -12 ... 1-.
– Remove bolts and take off cylinder head cover.

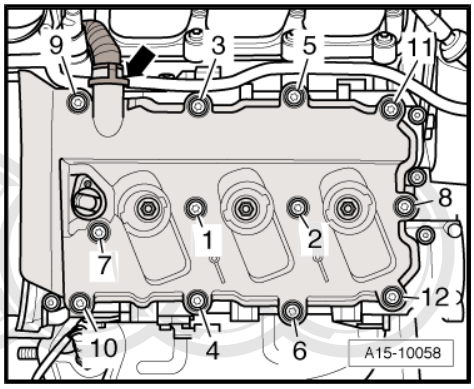

Installing

Installation is carried out in the reverse order; note the following:

Note

♦ *Renew cylinder head cover gaskets if damaged.*
♦ *Renew cylinder head cover bolts if gasket is damaged.*

– Clean sealing surfaces; they must be free of oil and grease.
– Tighten bolts for cylinder head cover to final setting in the sequence -1 ... 12-.
– Install ignition coils ⇒ page 320 .

Tightening torques

Component	Nm
Cylinder head cover to cylinder head	9
Hose clips (9 mm wide)	3

1.4 Removing and installing cylinder head

Special tools and workshop equipment required

♦ Locking pin - T40069-

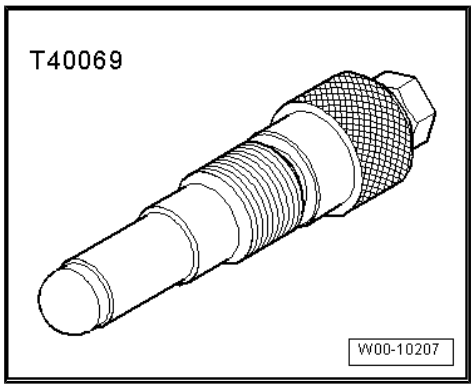

♦ Camshaft clamp - T40070-

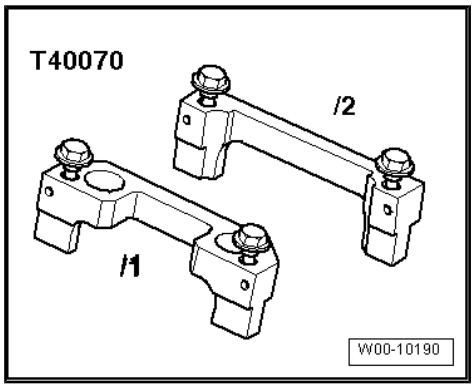

Removing

• Engine in vehicle.

Note

The following description shows the removal and installation of the cylinder head (left-side). The procedure for the other side is identical.

WARNING

The fuel system operates under high pressure. The pressure in the high-pressure part of the injection system must be reduced to a residual pressure prior to opening the system ⇒ page 261 . A clean cloth must then be wrapped around the connection and the residual pressure dissipated by carefully loosening the connection.

- Drain off coolant ⇒ page 222 .
- Remove front exhaust pipe: left-side ⇒ page 305 , right-side ⇒ page 309 .
- Remove poly V-belt ⇒ page 87 .
- Remove coolant pipe (front) ⇒ page 234 .
- Remove power steering pump ⇒ Rep. gr. 48 .

Note

To remove the cylinder head (right-side) you must first remove the vacuum pump for the brake servo ⇒ page 169 .

- Remove top and bottom sections of intake manifold ⇒ page 267 and ⇒ page 272 .
- Unplug electrical connectors at injectors.
- Remove oil filter housing ⇒ page 211 .
- Disconnect fuel line -arrow-.

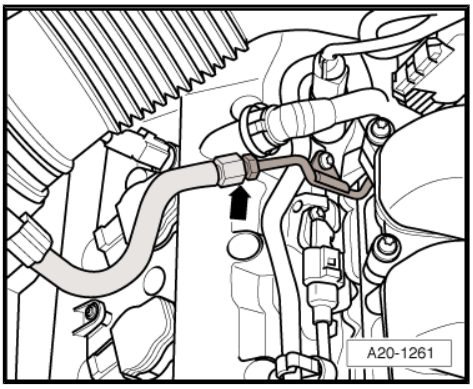

– Remove low-pressure pipe by unscrewing bolts and union nuts -1 ... 6-.

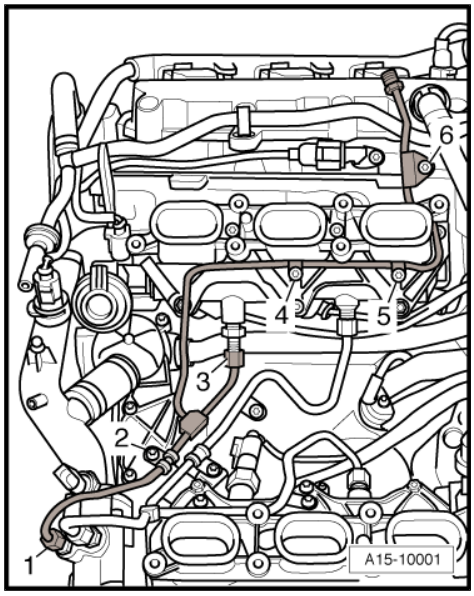

– Unscrew bolts -arrows- and remove lifting eye.

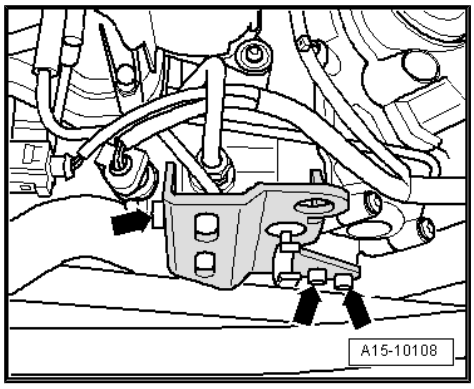

– Unplug electrical connectors -1- and -2-.
– Remove high-pressure pump from cylinder head (left-side) -arrows- (only necessary if you are planning to carry out further repairs to cylinder head).

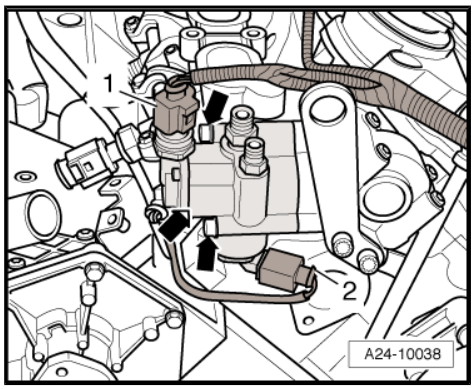

– Remove bolt -arrow- and lift out guide tube for oil dipstick.
– Remove cylinder head cover: left-side ⇒ page 161 , right-side ⇒ page 162 .
– Remove timing chain covers (left and right) ⇒ page 101 .
– Remove camshaft timing chains ⇒ page 116 .

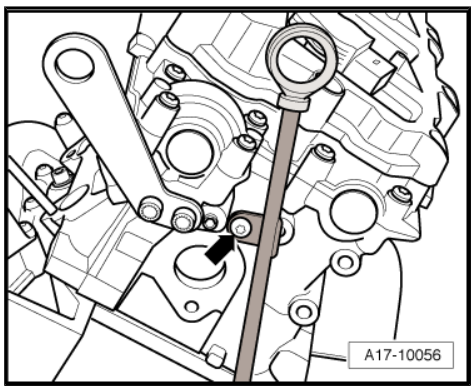

– Unscrew bolts -arrows- at rear of cylinder head.

♦ Cylinder head (left-side): 3 bolts

♦ Cylinder head (right-side): 4 bolts

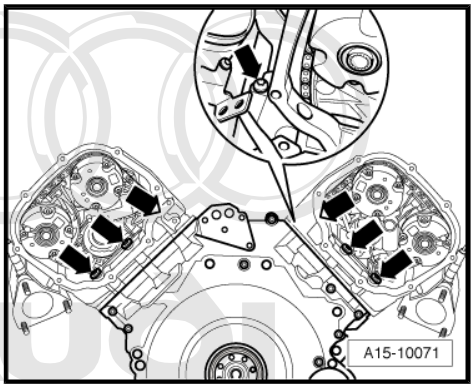

– Loosen cylinder head bolts in the sequence -1 ... 8-.

– Carefully remove cylinder head.

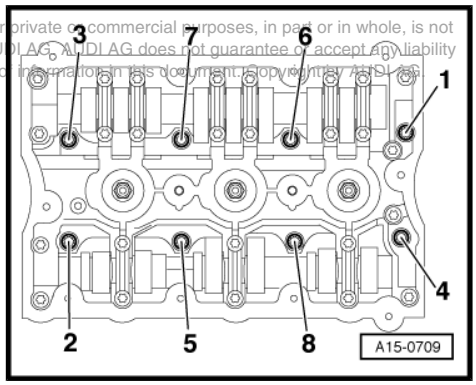

Installing

Note

♦ *Renew the cylinder head bolts.*

♦ *Renew self-locking nuts and bolts when performing assembly work.*

♦ *Renew bolts which are tightened to a specified angle as well as seals and gaskets.*

♦ *If repairing, carefully remove any remaining gasket material from the cylinder head and cylinder block. Ensure that no long scores or scratches are made on the surfaces.*

♦ *Carefully remove any remaining emery and abrasive material.*

♦ *No oil or coolant must be allowed to remain in the blind holes for the cylinder head bolts in the cylinder block.*

♦ *Checking cylinder head for distortion* *⇒ page 160* *.*

♦ *Do not remove new cylinder head gasket from packaging until it is ready to be fitted.*

♦ *Handle gasket very carefully. Damage to the silicone coating or the indented area will lead to leaks.*

♦ *Position cylinder head gasket on dowel sleeves. The word "oben" (top) or the Part No. should face towards cylinder head.*

♦ *When installing an exchange cylinder head with fitted camshafts, the contact surfaces between roller rocker fingers and cams must be oiled after installing the head.*

♦ *The plastic protectors fitted to protect the open valves should not be removed until the cylinder head is ready to be fitted.*

♦ *After fitting a new cylinder head or cylinder head gasket, change the coolant and engine oil.*

♦ *Secure all hose connections with the correct type of hose clips (same as original equipment) ⇒ Electronic parts catalogue .*

♦ *Fit all cable ties in the original positions when installing.*

♦ *After working on the valve gear, turn the engine carefully at least 2 rotations by hand to ensure that none of the valves make contact when the starter is operated.*

– Before fitting cylinder head, set crankshaft and camshafts to TDC. To do so, fit camshaft clamps - T40070- to both cylinder heads and tighten to 20 Nm.

• The camshaft clamp - T40070- is positioned correctly if the holes for the cylinder head bolts remain free.

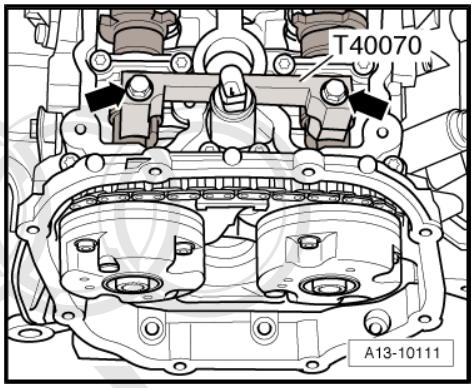

• The locking pin - T40069- must be screwed into the crankshaft.

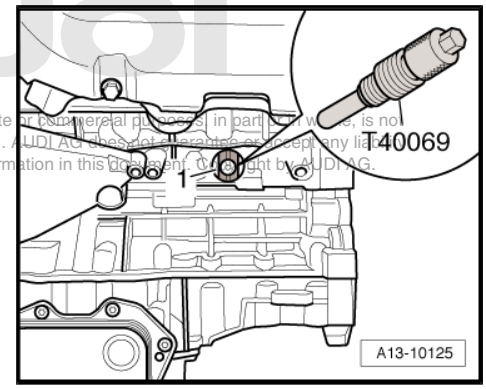

– Fit cylinder head gasket.

• Note position of centring pins -arrows- in cylinder block.

• Note installation position of cylinder head gasket: the word “oben” (top) or the part number should face towards the cylinder head.

– Fit cylinder head.

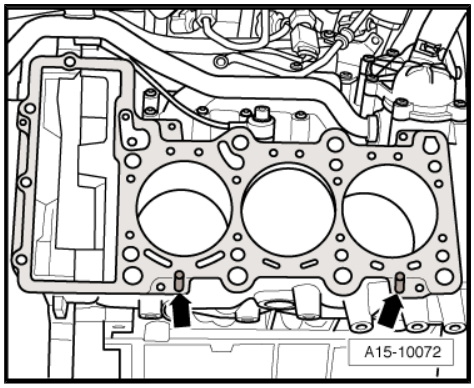

– Insert new cylinder head bolts and tighten hand-tight.

– Tighten cylinder head in 3 stages in the following sequence:

1. Tighten with torque wrench to 40 Nm.
2. Turn 90° ($^1/_4$ turn) further using a rigid wrench.
3. Turn 90° ($^1/_4$ turn) further using a rigid wrench.

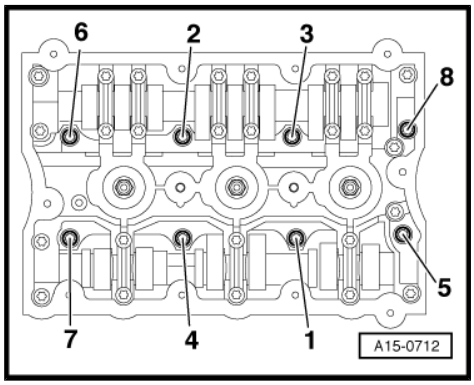

Note

Cylinder head bolts do not have to be torqued down again later after repairs.

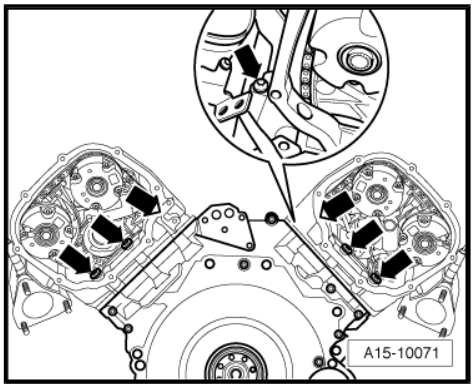

– Tighten bolts -arrows- to 9 Nm.

♦ Cylinder head (left-side): 3 bolts

♦ Cylinder head (right-side): 4 bolts

Remaining installation steps are carried out in reverse sequence; note the following:

– Install camshaft timing chains ⇒ page 121 .

– Install timing chain covers (left and right) ⇒ page 101 .

– Install cylinder head cover: left-side ⇒ page 161 , right-side ⇒ page 162 .

– Install high-pressure pump ⇒ page 281 .

– Install oil filter housing ⇒ page 211 .

– Install intake manifold (bottom section) with high-pressure and low-pressure lines ⇒ page 272 .

– Install intake manifold (top section) ⇒ page 267 .

– Install vacuum pump for brake servo ⇒ page 169 .

– Install power steering pump ⇒ Rep. gr. 48 .

– Install coolant pipe (front) ⇒ page 234 .

– Install poly V-belt ⇒ page 87 .

– Install front exhaust pipe together with catalytic converter: left-side ⇒ page 305 , right-side ⇒ page 309 .

– Align exhaust system so it is free of stress ⇒ page 318 .

– Change engine oil ⇒ Maintenance ; Booklet 404 .

– Fill cooling system with fresh coolant ⇒ page 222 .

– Top up power steering fluid and bleed steering system ⇒ Rep. gr. 48 .

Tightening torques

Component	Nm
Guide tube for dipstick to cylinder head	9
Fuel hose to fuel line	22

1.5 Removing and installing vacuum pump for brake servo

Removing

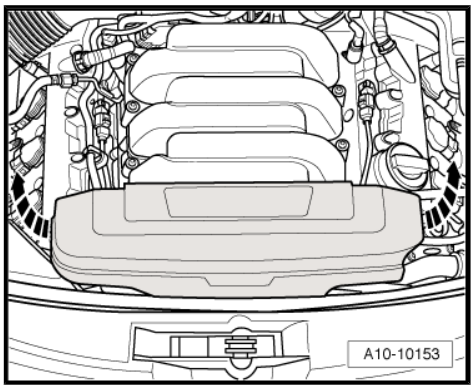

– Pull off engine cover panel (front) -arrows-.

– Unclip vacuum line to air cleaner from vacuum pump housing.
– Detach vacuum hose -1- from vacuum pump.
– Unscrew bolts -arrows- and remove vacuum pump.

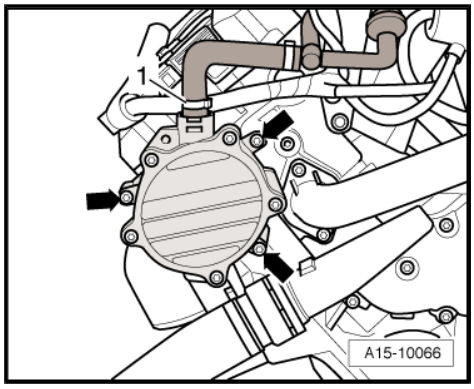

Installing

Installation is carried out in the reverse order; note the following:

Note

- *Renew O-rings.*
- *Secure all hose connections with the correct type of hose clips (same as original equipment) ⇒ Electronic parts catalogue .*

– Set drive lug of vacuum pump -1- so it engages in symmetrical slot on camshaft when pump is fitted -arrows-.

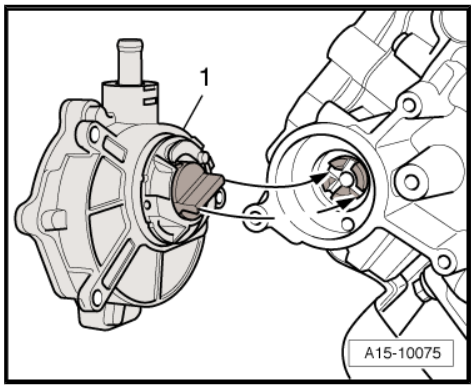

Tightening torque

Component	Nm
Vacuum pump to cylinder head	9

1.6 Checking compression

Special tools and workshop equipment required

- Spark plug socket and extension - 3122 B-

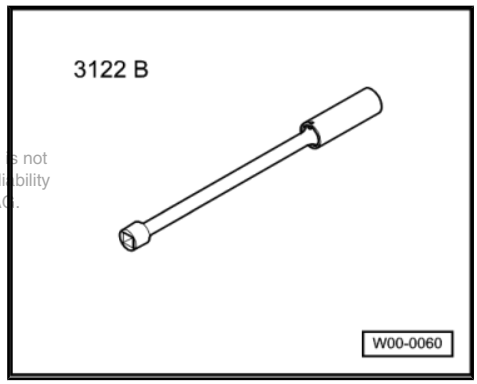

- Compression tester - V.A.G 1763-

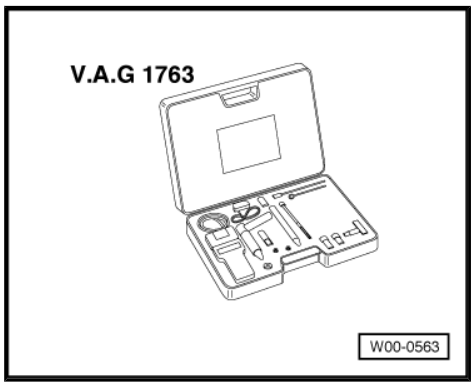

Test conditions

- Engine oil temperature at least 30 °C.
- Battery voltage at least 12.5 V.

Test sequence

– Switch off ignition.

– Pull off engine cover panel (rear) -arrows-.

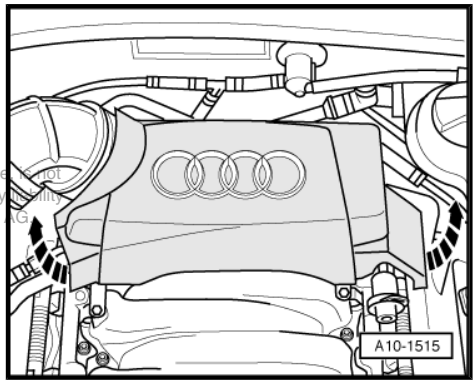

– Pull off engine cover panel (front) -arrows-.

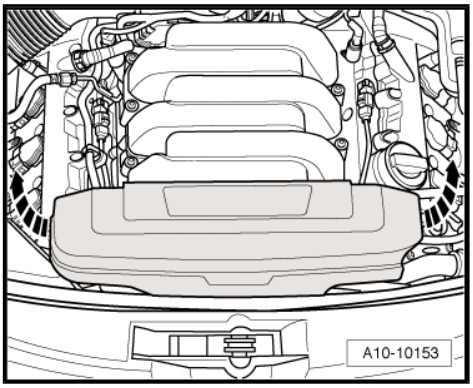

– Loosen hose clip -2- and detach air intake hose at air cleaner housing.

– Unplug electrical connector -1-.

– Detach vacuum hose -3-.

– Remove bolts -arrows-.

– Take out air cleaner housing.

– Remove ignition coils ⇒ page 320 .

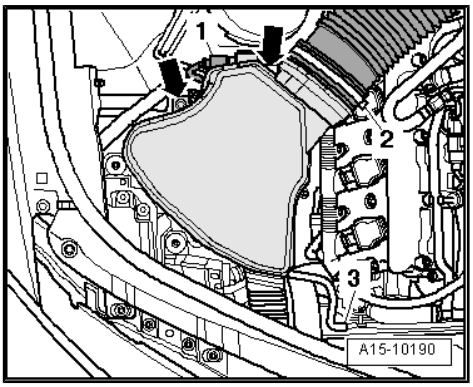

– Unplug electrical connector -3- leading to injectors at rear of cylinder head (left-side).

Note

Disregard items -1- and -2-.

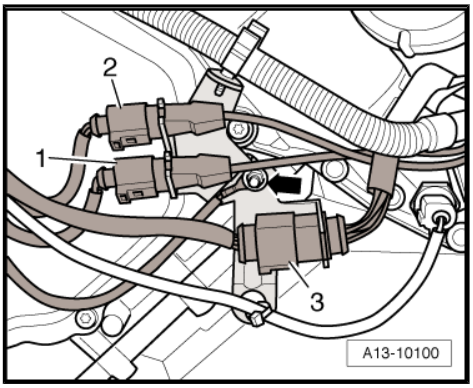

– Unplug electrical connector -1- leading to injectors at rear of cylinder head (right-side).

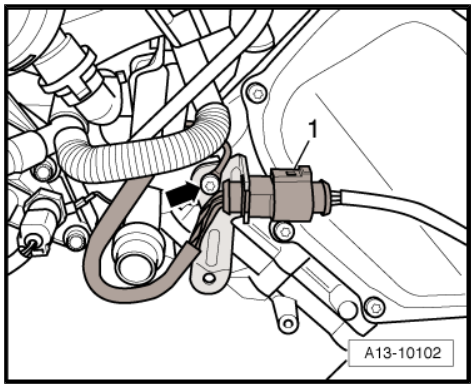

Note

Disregard -arrow-.

– Remove spark plugs with spark plug socket - 3122 B- .

– Test the compression pressure with the compression tester - V.A.G 1763- .

Note

Using the compression tester ⇒ Operating instructions .

– Have a 2nd mechanic press down the accelerator pedal completely and simultaneously operate the starter until the pressure no longer increases on the tester display.

Compression pressure	New	Wear limit	Difference between cylinders
bar	14.5 … 21.0	14.0	3.0 (maximum)

Installation is carried out in the reverse order; note the following:

– Install spark plugs ⇒ Maintenance ; Booklet 404 .

– Install ignition coils ⇒ page 320 .

– Finally, interrogate event memory and erase if necessary. If event memory has been erased, generate readiness code in engine control unit in “Guided Fault Finding” mode ⇒ Vehicle diagnostic tester.

Tightening torque

Component	Nm
Hose clips (9 mm wide)	3

2 Servicing valve gear

2.1 Valve gear - exploded view

Note

- *Cylinder heads which have cracks between the valve seats or between a valve seat insert and the spark plug thread can be re-installed without reducing service life, provided the cracks are only slight and do not exceed a maximum of 0.3 mm in width, and no more than the first 4 turns of the spark plug threads are cracked.*
- *After installing camshafts, wait for approx. 30 minutes before starting engine. Hydraulic valve compensation elements have to settle (otherwise valves will strike pistons).*
- *After working on the valve gear, turn the engine carefully at least 2 rotations by hand to ensure that none of the valves make contact when the starter is operated.*
- *The following illustration shows the left-side cylinder head.*

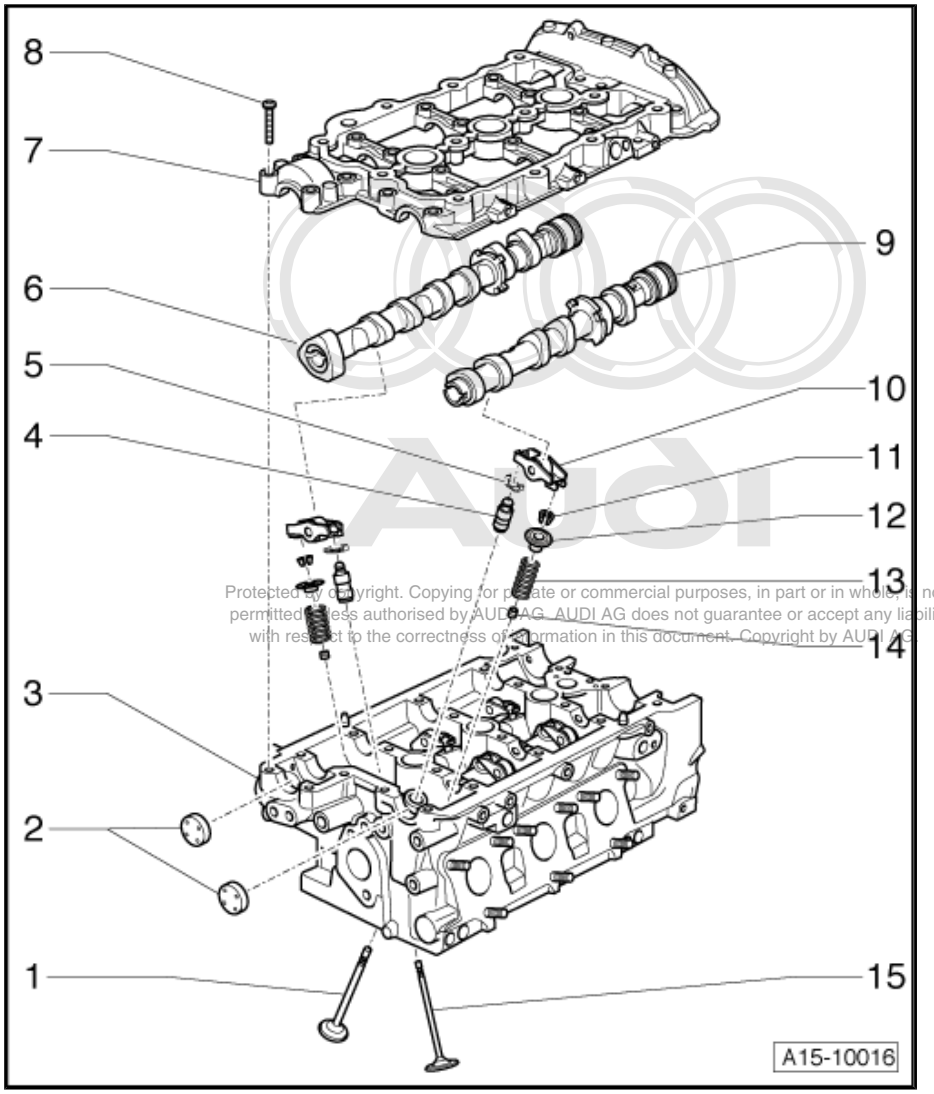

1 - Exhaust valve

- ❑ Different versions available ⇒ Electronic parts catalogue
- ❑ Do not machine, only grinding-in is permitted
- ❑ Mark installation position for re-installation
- ❑ Valve dimensions ⇒ page 191
- ❑ Checking valve guides ⇒ page 191

2 - Sealing plugs

- ❑ Apply sealant when installing; refer to ⇒ Electronic parts catalogue

3 - Cylinder head

- ❑ Checking valve guides ⇒ page 191

4 - Hydraulic valve compensation element

- ❑ Checking ⇒ page 188
- ❑ Do not interchange
- ❑ Lubricate contact surface

5 - Securing clip

- ❑ Check for firm attachment

6 - Inlet camshaft

- ❑ Checking axial clearance ⇒ page 175
- ❑ Removing and installing ⇒ page 176
- ❑ Check radial clearance with Plastigage (roller rocker fingers removed)
- ❑ Radial clearance when bearing ∅ is 24 mm: 0.024 ... 0.066 mm
- ❑ Radial clearance when bearing ∅ is 36 mm: 0.032 ... 0.078 mm
- ❑ Runout: max. 0.04 mm

7 - Retaining frame

- ❑ With integrated camshaft bearings
- ❑ Removing and installing ⇒ “2.3 Removing and installing camshafts”, page 176

8 - 8 Nm + 90° ($^1/_4$ turn) further

- ❑ Renew

9 - Exhaust camshaft

- ❑ Checking axial clearance ⇒ page 175
- ❑ Removing and installing ⇒ page 176
- ❑ Check radial clearance with Plastigage (roller rocker fingers removed)
- ❑ Radial clearance when bearing ∅ is 24 mm: 0.024 ... 0.066 mm
- ❑ Radial clearance when bearing ∅ is 36 mm: 0.032 ... 0.078 mm
- ❑ Runout: max. 0.04 mm

10 - Roller rocker finger

- ❑ Do not interchange
- ❑ Check roller bearings for ease of movement

- ❑ Lubricate contact surface

11 - Valve cotters

12 - Valve spring plate

13 - Valve spring

- ❑ Installation position: closely spaced spring coils face towards cylinder head

14 - Valve stem oil seal

- ❑ Renewing (cylinder head installed) ⇒ page 181
- ❑ Renewing (cylinder head removed) ⇒ page 185

15 - Inlet valve

- ❑ Do not machine, only grinding-in is permitted
- ❑ Mark installation position for re-installation
- ❑ Valve dimensions ⇒ page 191
- ❑ Checking valve guides ⇒ page 191

2.2 Checking axial clearance of camshafts

Special tools and workshop equipment required

- ♦ Universal dial gauge bracket - VW 387-

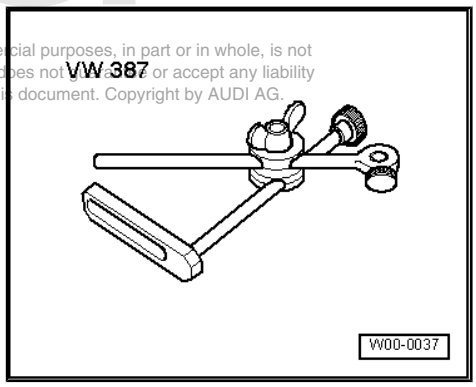

- ♦ Dial gauge - VAS 6080-

Test sequence

– Perform measurement with roller rocker fingers and hydraulic compensation elements removed.

– Secure universal dial gauge bracket - VW 387- with dial gauge - VAS 6080- to cylinder head.

– Determine axial clearance.

• Axial clearance: 0.100 ... 0.191 mm

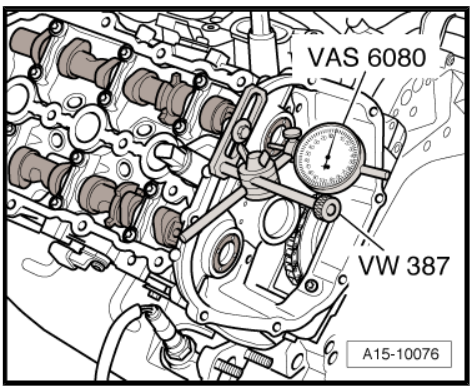

2.3 Removing and installing camshafts

Special tools and workshop equipment required

- Impact extractor attachment -T10133/3- from tool set for FSI engines - T10133-
- Locking pin - T40069-
- Camshaft clamp - T40070- (2x)
- Locating pins - T40116-
- Electric drill with plastic brush attachment
- Safety goggles
- Sealant ⇒ Electronic parts catalogue

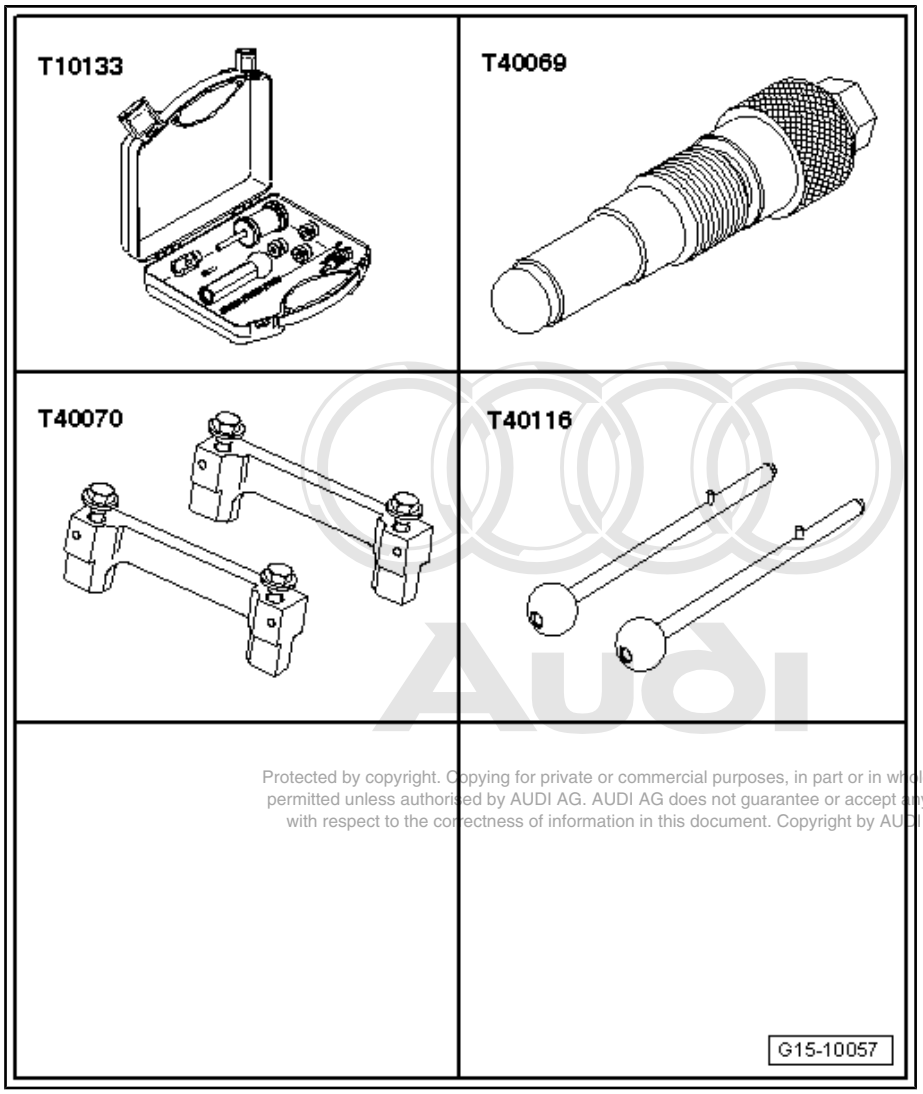

Removing

– Remove cylinder head cover: left-side ⇒ page 161 , right-side ⇒ page 162 .

– Remove timing chain covers (left and right) ⇒ page 101 .

– Remove camshaft timing chains from camshafts ⇒ page 116 .

– To remove the camshafts (right-side) you must first remove the vacuum pump for the brake servo ⇒ page 169 .

– Slacken retaining frame bolts in the sequence -22 ... 1-.

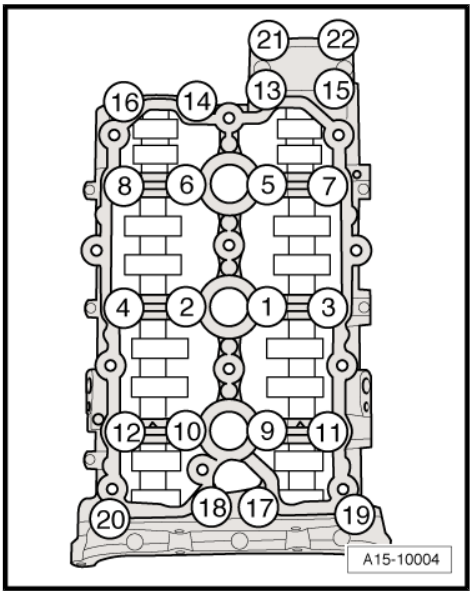

Note

Illustration shows retaining frame of left-side cylinder head.

– Carefully remove retaining frame.
– Mark and remove camshafts.

Note

To enable the locating pins -T40116- to be attached during installation on engines fitted with dowel pins -arrows- for retaining frame , drive out dowel pins using a suitable drift.

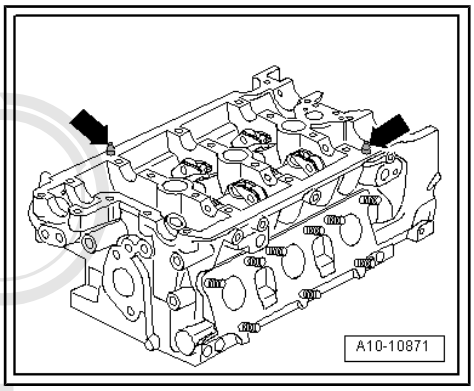

Installing

Note

Renew gaskets and seals.

- Crankshaft -1- locked in position with locking pin - T40069- .

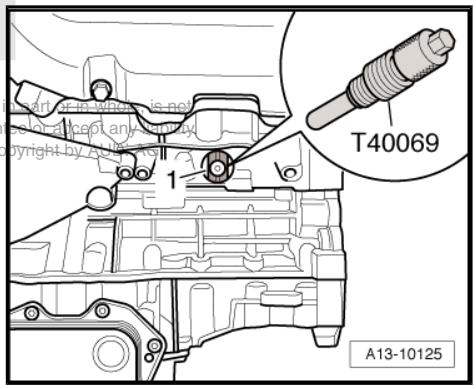

Caution

Protect lubrication system against contamination.

- ***Cover exposed parts of the engine.***

WARNING

Risk of eye injury.

- *Wear safety goggles.*

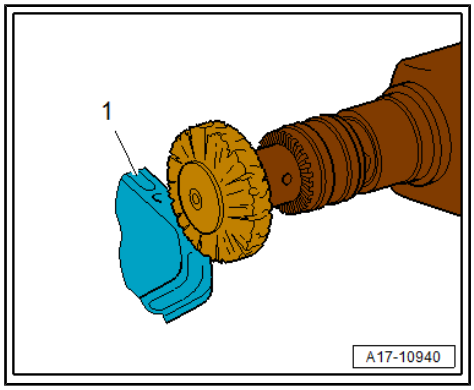

– Remove remaining sealant from cylinder head and retaining frame -1- using rotating plastic brush or similar.
– Clean sealing surfaces; they must be free of oil and grease.
– Lubricate running surfaces of camshafts.
– Lay retaining frame aside onto workbench, on a soft surface.

– Insert camshafts into retaining frame.
• Camshafts must be in correct position in axial bearings -arrows- in retaining frame.
• The ends of the piston rings -1- and -2- must point up or down, never to the side.
– Turn retaining frame upside down with camshafts inserted, keeping hold of the camshafts in the retaining frame.

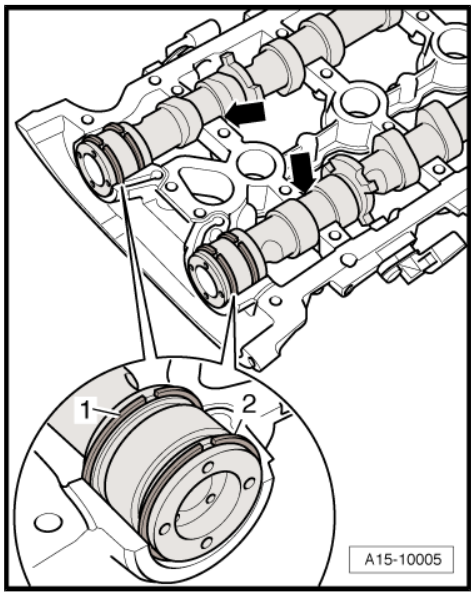

– Turn the camshafts until the threaded holes -arrows- point upwards.
– Check that camshafts are still in correct position in axial bearings in retaining frame.

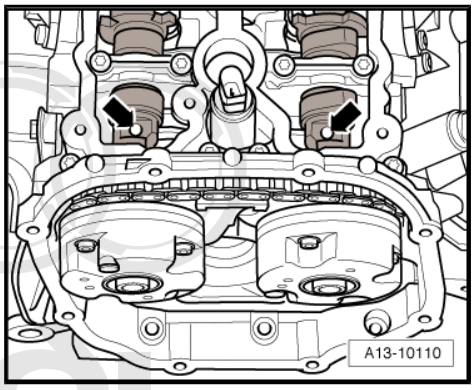

– Fit camshaft clamp - T40070- as shown in illustration and tighten bolts -arrows- to 20 Nm.

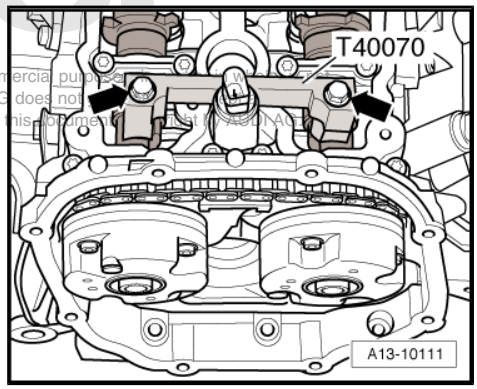

– Cut off nozzle of tube at front marking (∅ of nozzle approx. 1 mm).
– Turn retaining frame back up.

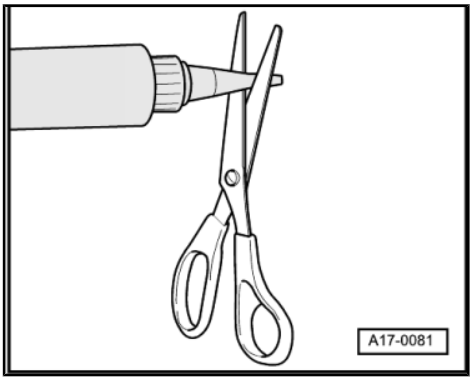

– Apply a small amount of sealant in groove for gasket -3- in area of opening for camshaft control solenoid valve -arrows-.
– Press gasket into retaining frame and wipe off excess sealant from gasket and retaining frame.
– Apply the beads of sealant -1-, -2- and -4- onto the clean sealing surfaces of the retaining frame as illustrated.
• Width of sealant bead: 1.0 mm.

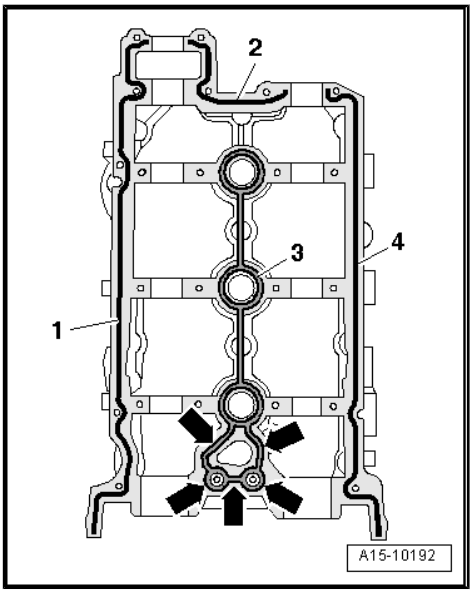

Note

The beads of sealant must be applied exactly according to these instructions, otherwise excess sealant can get into the camshaft bearings.

Note

Fit and secure the retaining frame without delay, as the sealant starts hardening immediately.

– Fit retaining frame onto cylinder head.
– Insert locating pins -T40116- in retaining frame and cylinder head.

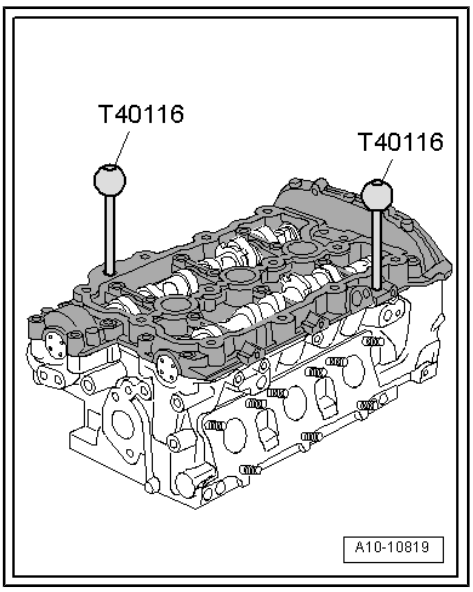

– Fit retaining frame onto cylinder head without delay.

– Tighten retaining frame bolts evenly in the sequence -1 ... 22-, initially only hand-tight.

• The retaining frame should make contact with the cylinder head over the full surface.

– Tighten retaining frame bolts to final torque in the sequence -1 ... 22-.

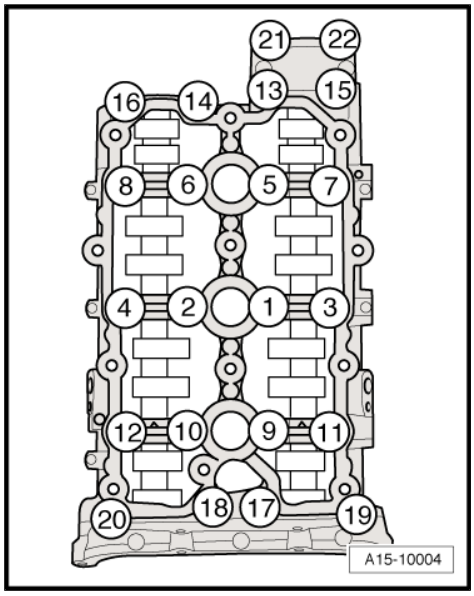

Note

♦ *Illustration shows retaining frame of left-side cylinder head.*

♦ *After installing the retaining frame, wait about 30 minutes for the sealant to dry.*

– Clean bore for sealing plug in cylinder head; it must be free of oil and grease.

– Coat outer circumference of sealing plug -arrow- with sealant; for sealant refer to ⇒ Electronic parts catalogue .

– Drive in sealing plug until flush.

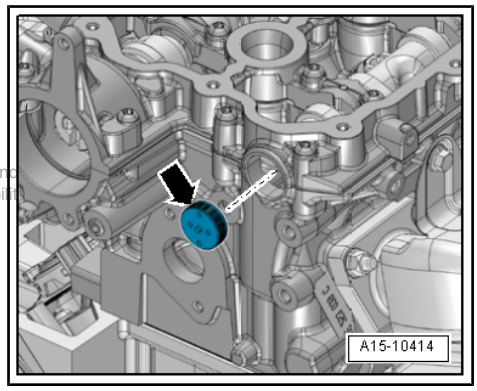

– Use impact extractor attachment -T40116- to pull out locating pins -T10133/3- .

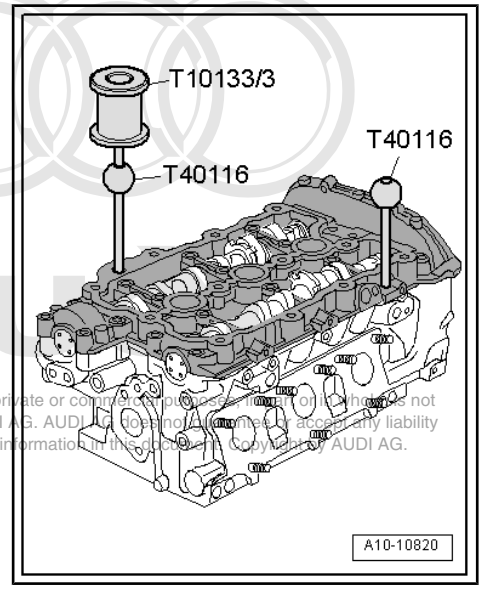

Perform further installation in reverse order, paying attention to the following:

Note

- *After installing camshafts, wait for approx. 30 minutes before starting engine. Hydraulic valve compensation elements have to settle (otherwise valves will strike pistons).*
- *After working on the valve gear, turn the engine carefully at least 2 rotations by hand to ensure that none of the valves make contact when the starter is operated.*

– Install vacuum pump for brake servo ⇒ page 169 .

– Install camshaft timing chains ⇒ page 116 .

– Install timing chain covers (left and right) ⇒ page 101 .

– Install cylinder head cover: left-side ⇒ page 161 , right-side ⇒ page 162 .

Tightening torque

Component	Nm
Retaining frame to cylinder head	8 + 90° 1)2)
• 1) Renew bolts. • 2) 90° = one quarter turn.	

2.4 Renewing valve stem oil seals (cylinder head installed)

Special tools and workshop equipment required

- Spark plug socket and extension - 3122 B-
- Valve stem seal puller - 3364-
- Valve stem seal fitting tool - 3365-
- Removal and installation device for valve cotters - VAS 5161 A- with guide plate -VAS 5161/19B-
- Adapters - T40012-

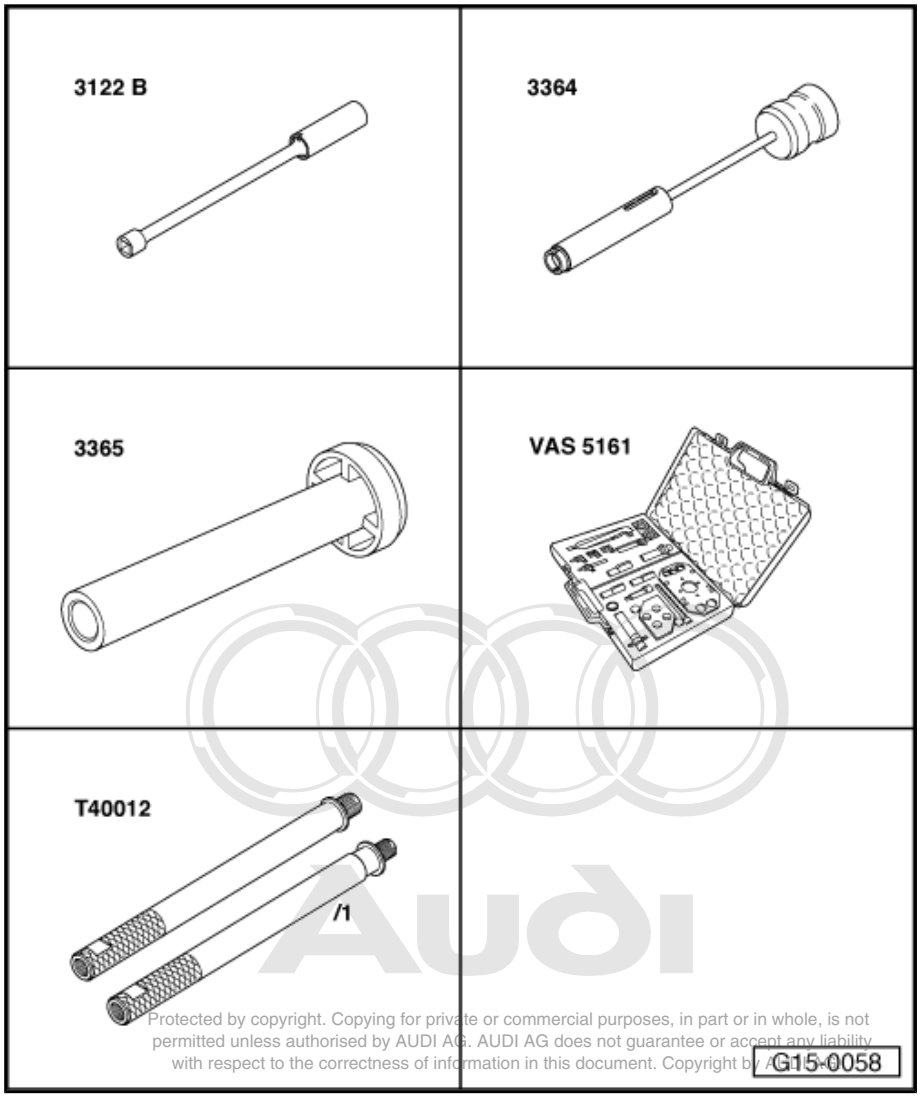

Procedure

– Remove camshafts ⇒ page 176 .

– Mark allocation of roller rocker fingers and hydraulic compensation elements for re-installation.

– Remove roller rocker fingers together with hydraulic compensation elements and place on a clean surface.

– Remove spark plugs with spark plug socket - 3122 B- .

– Apply drift - VAS 5161/3- to valve spring plate and knock valve cotters loose using a plastic hammer.

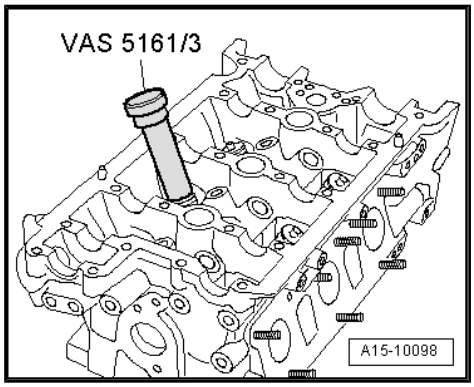

– Fit guide plate -VAS 5161/19B- from removal and installation device for valve cotters - VAS 5161 A- on cylinder head.
– Secure guide plate using the knurled screws - VAS 5161/12- .
– Screw adapter - T40012- with seal hand-tight into the corresponding spark plug thread and apply a steady pressure.
• Minimum pressure: 6 bar

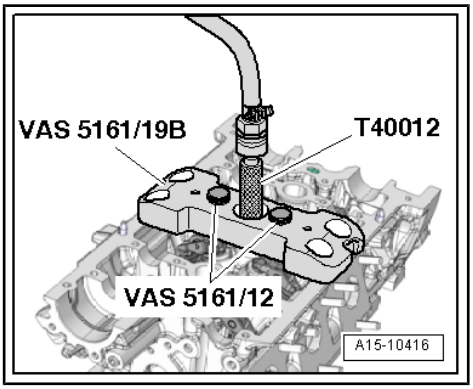

– Screw snap-in device - VAS 5161/6- with engaging fork - VAS 5161/5- into guide plate.
– Insert assembly cartridge - VAS 5161/8- into guide plate.
– Attach pressure fork - VAS 5161/2- to snap-in device and push assembly cartridge down.
– At the same time, turn knurled screw of assembly cartridge clockwise until tips engage in valve cotters.
– Move knurled screw back and forth slightly; the valve cotters are thus forced apart and taken up by the assembly cartridge.
– Release pressure fork.
– Remove assembly cartridge.
– Detach guide plate and turn to one side.
• The compressed air hose remains connected.
– Remove valve spring with valve spring plate.

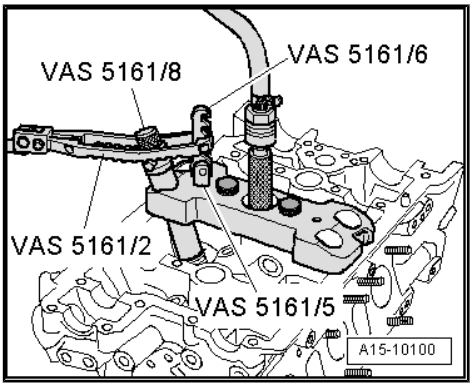

– Remove valve stem oil seals using the valve stem seal puller - 3364- .

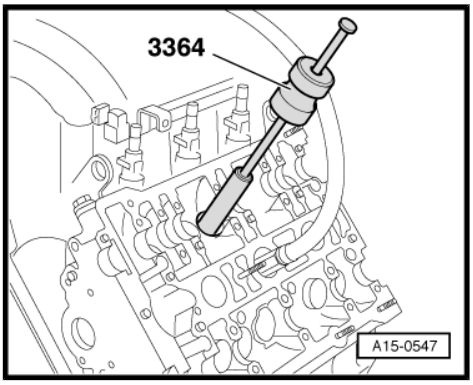

If the puller -3364- cannot be used on some of the valve stem oil seals due to the confined space, proceed as follows:

– Knock out pin -arrow- of puller -3364- using a drift and remove the extractor attachment.

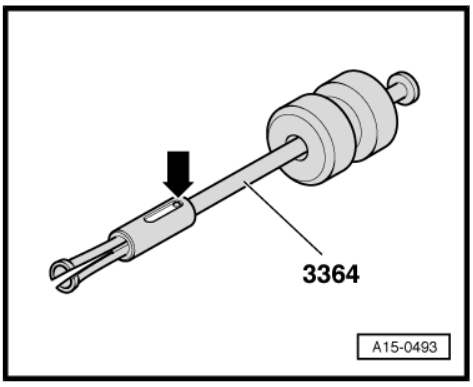

– Attach lower part of puller -3364- to valve stem oil seal.
– Secure puller -3364- with punch or roll-pin drift -1-, as shown in illustration.
– Apply an assembly lever to puller -3364- and pull out valve stem oil seal -arrow-.

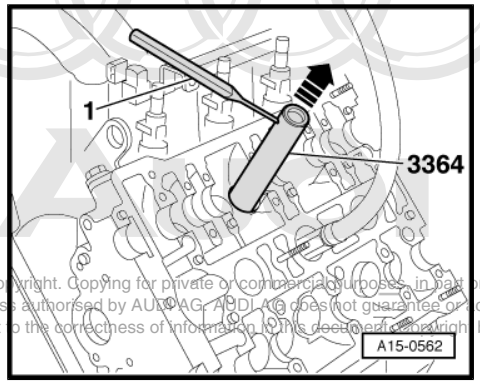

Note

A plastic sleeve -A- is included with the new valve stem oil seals.

– Fit plastic sleeve -A- onto the valve stem to prevent damage to the new valve stem oil seal -B-.
– Lightly lubricate sealing lip of valve stem oil seal.
– Slip valve stem oil seal over plastic sleeve.
– Carefully press the valve stem oil seal onto valve guide using fitting tool -3365- .
– Remove plastic sleeve.

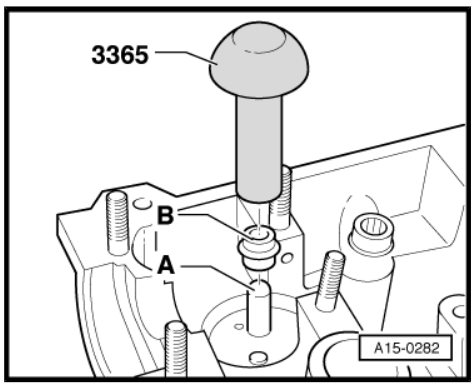

If valve cotters have been removed from assembly cartridge, they need to be put into insertion device - VAS 5161/18- first.

• Larger diameter of valve cotters faces upwards.

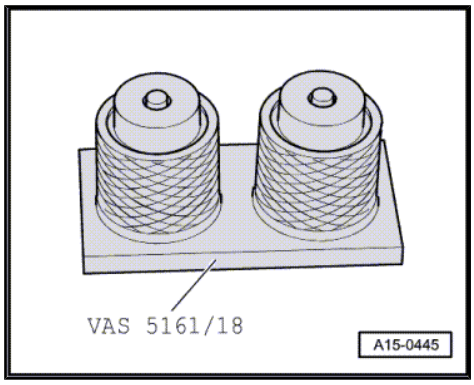

– Install valve spring and valve spring plate.
• The closely spaced spring coils -arrow- face the cylinder head.

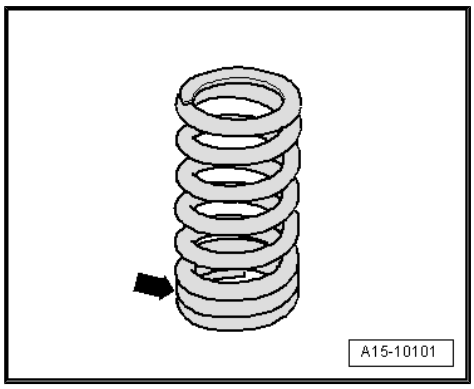

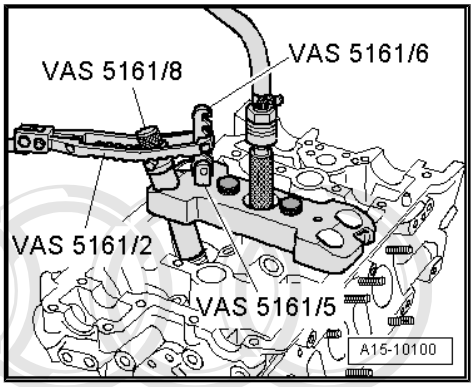

- Screw guide plate back onto cylinder head.
- Insert assembly cartridge into guide plate.
- Push pressure fork down and pull knurled screw upwards while turning to left and right – this will insert the valve cotters.
- Release pressure fork with knurled screw still in pulled position.
- Ensure that all roller rocker fingers contact the ends of the valve stems correctly and are clipped onto their respective hydraulic compensation elements.
- Install camshafts ⇒ page 176 .
- Install spark plugs ⇒ Maintenance ; Booklet 404 .

Note

- *After installing camshafts, wait for approx. 30 minutes before starting engine. Hydraulic valve compensation elements have to settle (otherwise valves will strike pistons).*
- *After working on the valve gear, turn the engine carefully at least 2 rotations to ensure that none of the valves make contact when the starter is operated.*

2.5 Renewing valve stem oil seals (cylinder head removed)

Special tools and workshop equipment required

- Valve stem seal puller -3364-
- Valve stem seal fitting tool -3365-
- Removal and installation device for valve cotters -VAS 5161 A- with guide plate -VAS 5161/19B-
- Engine and gearbox support - VAS 6095-
- Cylinder head tensioning device - VAS 6419-

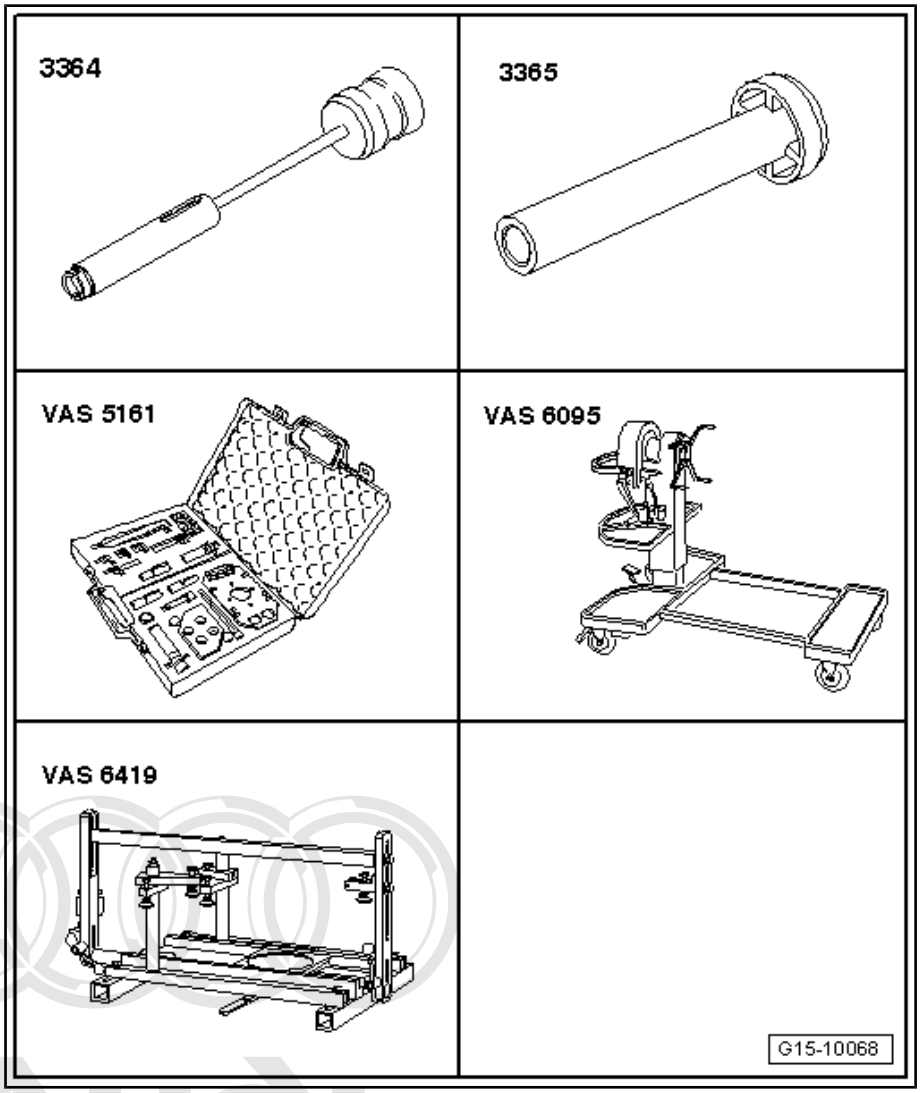

Procedure

– Remove camshafts ⇒ page 176 .

– Attach tensioning device -VAS 6419- to engine and gearbox support - VAS 6095- .

– Secure cylinder head in tensioning device -VAS 6419- as illustrated.

– Connect compressed air line to tensioning device -VAS 6419- .

– Using lever -arrow-, slide air pad under cylinder where valve stem oil seal is to be removed.

– Apply just enough compressed air to bring air pad into contact with valve heads.

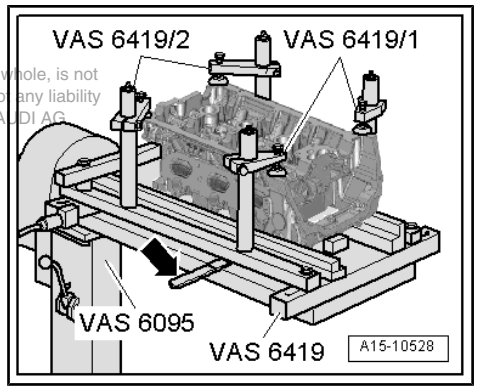

– Apply drift - VAS 5161/3- to valve spring plate and knock valve cotters loose using a plastic hammer.

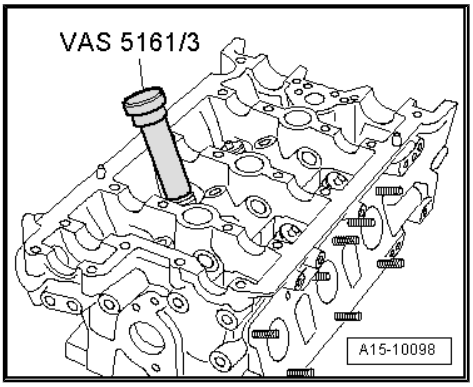

– Fit guide plate -VAS 5161/19B- from removal and installation device for valve cotters - VAS 5161 A- on cylinder head.
– Secure guide plate using the knurled screws - VAS 5161/12- .

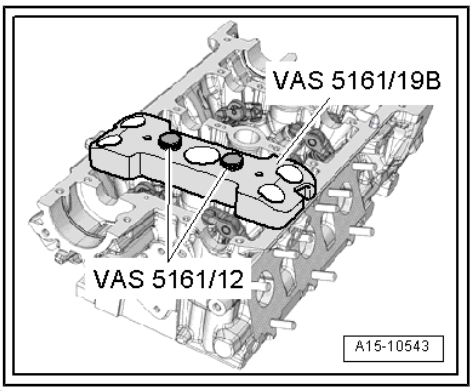

– Screw snap-in device - VAS 5161/6- with engaging fork - VAS 5161/5- into guide plate.
– Insert assembly cartridge - VAS 5161/8- into guide plate.
– Attach pressure fork - VAS 5161/2- to snap-in device and push assembly cartridge down.
– At the same time, turn knurled screw of assembly cartridge clockwise until tips engage in valve cotters.
– Move knurled screw back and forth slightly; the valve cotters are thus forced apart and taken up by the assembly cartridge.
– Release pressure fork.
– Remove assembly cartridge.
– Detach guide plate and turn to one side.
– Remove valve spring with valve spring plate.

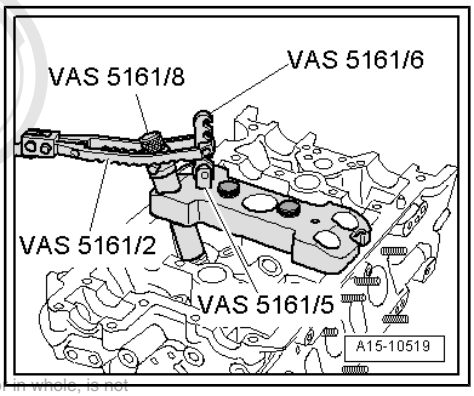

– Remove valve stem oil seals using the valve stem seal puller - 3364- .

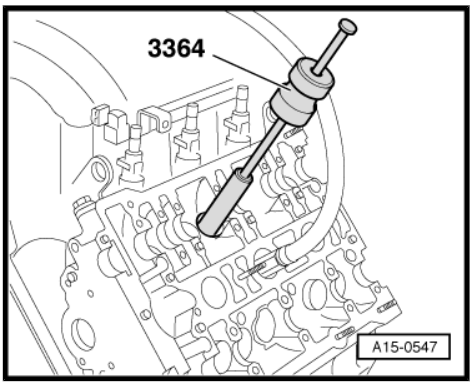

Note

A plastic sleeve -A- is included with the new valve stem oil seals.

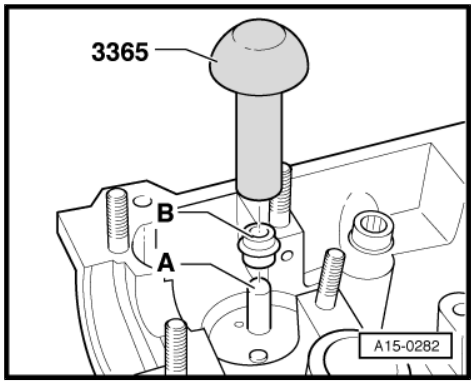

- Fit plastic sleeve -A- onto the valve stem to prevent damage to the new valve stem oil seal -B-.
- Lightly lubricate sealing lip of valve stem oil seal.
- Slip valve stem oil seal over plastic sleeve.
- Carefully press the valve stem oil seal onto valve guide using fitting tool -3365- .
- Remove plastic sleeve.

If valve cotters have been removed from assembly cartridge, they need to be put into insertion device - VAS 5161/18- first.

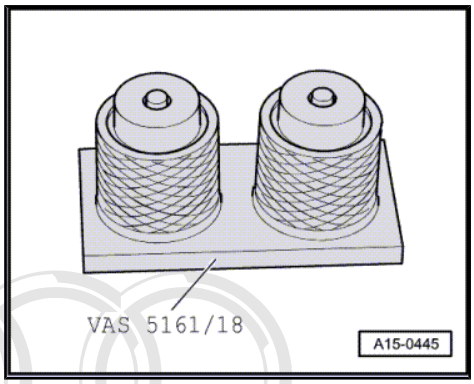

- Larger diameter of valve cotters faces upwards.

- Install valve spring and valve spring plate.
- The closely spaced spring coils -arrow- face the cylinder head.

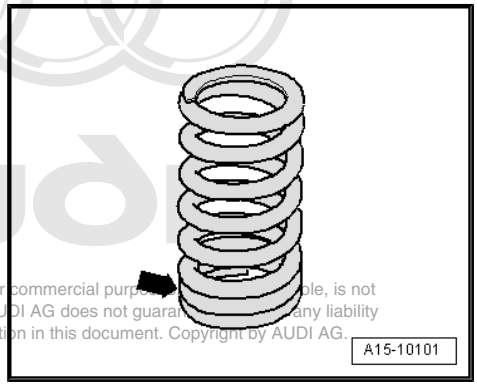

- Screw guide plate back onto cylinder head.
- Insert assembly cartridge into guide plate.
- Push pressure fork down and pull knurled screw upwards while turning to left and right – this will insert the valve cotters.
- Release pressure fork with knurled screw still in pulled position.
- Ensure that all roller rocker fingers contact the ends of the valve stems correctly and are clipped onto their respective hydraulic compensation elements.
- Install camshafts ⇒ page 176 .

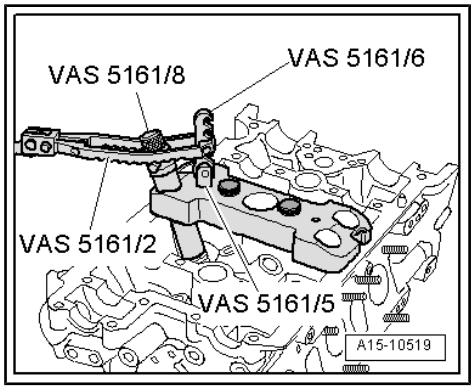

2.6 Checking hydraulic valve compensation elements

Special tools and workshop equipment required

♦ Feeler gauge

Note

- *The hydraulic compensation elements cannot be serviced.*
- *Irregular valve noises when starting engine are normal.*

Test sequence

– Start engine and let it run until the radiator fan has switched on once.

– Increase engine speed to approx. 2500 rpm for 2 minutes (perform road test if necessary).

Note

If the irregular valve noises stop but recur repeatedly during short trips, renew the oil retention valve. The oil retention valve is located in the oil filter housing *⇒ Item 7 (page 210)* *.*

If the hydraulic compensation elements are still noisy, locate the defective element as follows:

– Remove cylinder head cover: left-side ⇒ page 161 , right-side ⇒ page 162 .

– If fitted, remove bolts -arrows- securing exhaust pipe for auxiliary/additional heater to noise insulation.

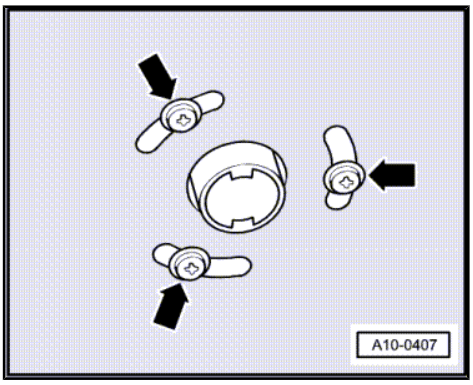

– Open quick-release fasteners -1- and remove noise insulation (front). Leave rear noise insulation in position.

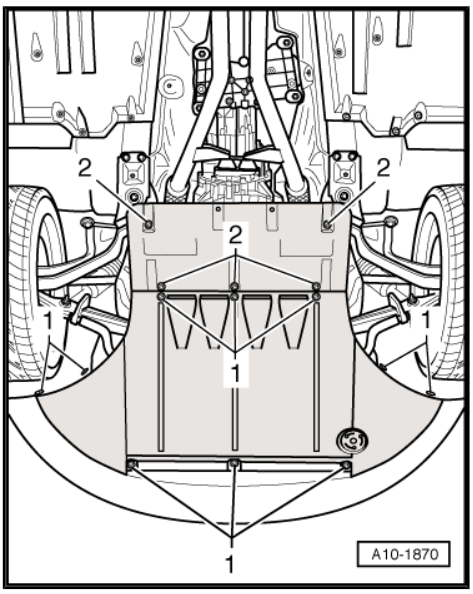

– Unbolt cross piece at lock carrier -arrows-.

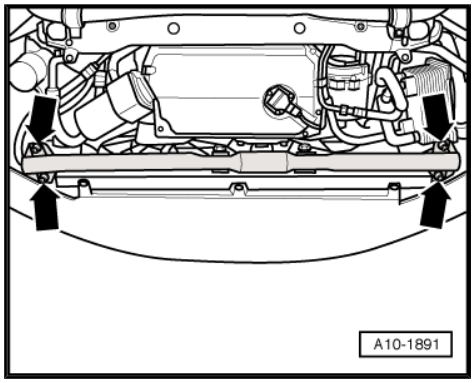

– Unscrew bolts -arrows- and remove cross piece from stop for torque reaction support.

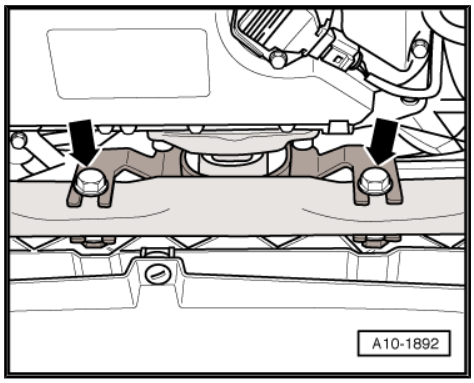

– Unscrew bolts -arrows- and remove torque reaction support together with stop for torque reaction support.
– Turn crankshaft until cam above compensation element to be checked is positioned at top (turn crankshaft clockwise via central bolt on poly V-belt pulley).

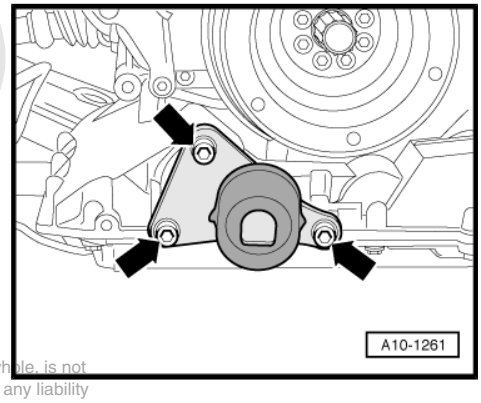

– Determine clearance between cam and roller rocker finger.

– Press roller rocker finger down using a screwdriver -arrow-.

If it is possible to insert a feeler gauge of 0.20 mm between camshaft and roller rocker finger:

– Renew hydraulic valve compensation element
⇒ “2.3 Removing and installing camshafts”, page 176 .

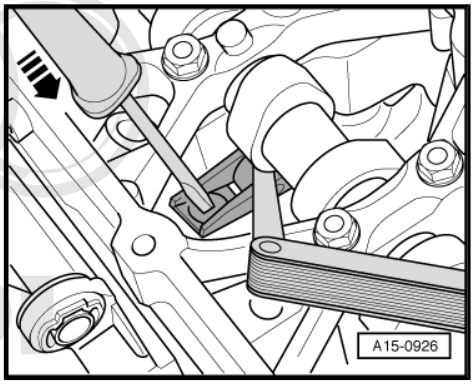

Note

- *After installing camshafts, wait for approx. 30 minutes before starting engine. Hydraulic valve compensation elements have to settle (otherwise valves will strike pistons).*
- *After working on the valve gear, turn the engine carefully at least 2 rotations to ensure that none of the valves make contact when the starter is operated.*

Tightening torques

Component	Nm
Torque reaction support to top section of sump	40
Cross piece to lock carrier	42
Stop for torque reaction support to cross piece	65

2.7 Valve dimensions

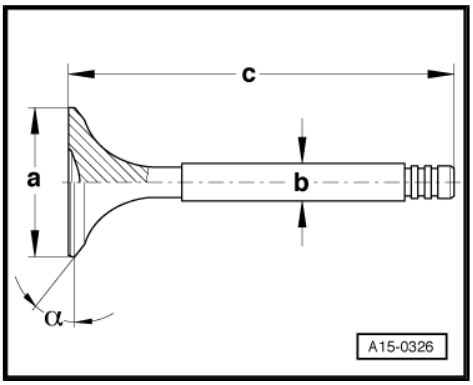

Note

Inlet and exhaust valves must not be machined. Only grinding-in is permitted.

Dimension		Inlet valve	Exhaust valve
∅ a	mm	33.85 ± 0.10	28.0 ± 0.1
∅ b	mm	5.98 ± 0.01	5.96 ± 0.01
c	mm	104.0 ± 0.2	101.9 ± 0.2
α	∠°	45	45

WARNING

- *Care must be taken when disposing of old sodium-cooled exhaust valves.*
- *The valves must be sawn in two with a metal saw between the centre of the stem and valve head. When doing so, the valves must not come into contact with water. After preparing the valves, throw a maximum of ten into a bucket of water. Then step away immediately, since a chemical reaction will occur in which the sodium filling burns.*
- *After performing these steps the valves can be disposed of in the normal way.*

2.8 Checking valve guides

Special tools and workshop equipment required

♦ Universal dial gauge bracket - VW 387-

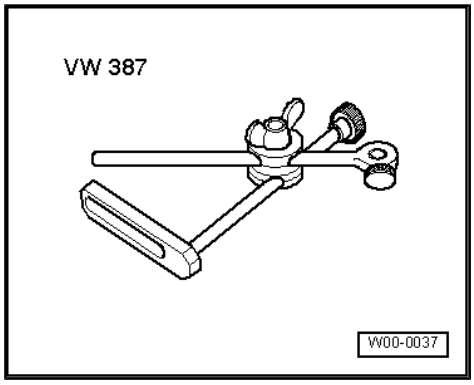

♦ Dial gauge - VAS 6079-

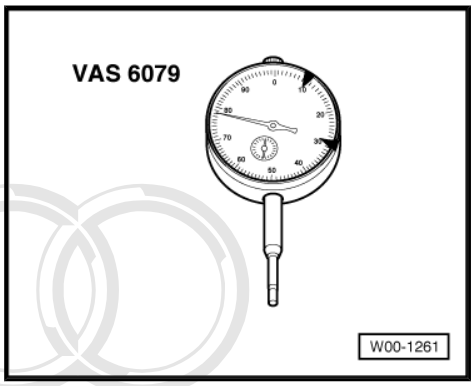

Test sequence

– Insert valve into valve guide. Only insert inlet valve into inlet valve guide and exhaust valve into exhaust valve guide, as the stem diameters are different.

• End of valve stem must be flush with valve guide.

– Determine amount of sideways play.

• Wear limit (sideways play): 0.8 mm.

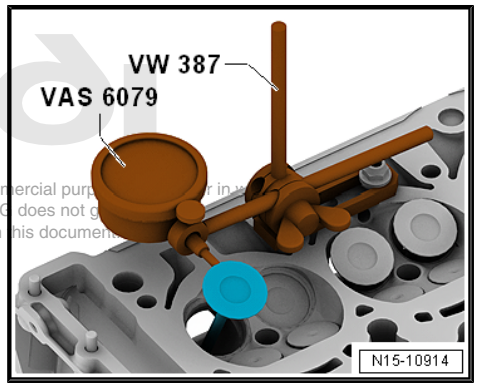

Note

♦ *If the valve has to be renewed as part of a repair, use a new valve for the measurement.*

♦ *If the wear limit is exceeded, repeat the measurement with new valves. Renew cylinder head if wear limit is still exceeded.*

2.9 Checking valves

– Visually inspect for scoring on valve stem and on seating surface.

If scoring is clearly visible:

– Renew the relevant valve.

17 – Lubrication

1 Removing and installing parts of lubrication system

1.1 Sump (bottom section), sump (top section), oil pump, engine oil cooler - exploded view

Note

- *If large quantities of metal shavings or particles are found in the engine oil when repairing the engine, the oil passages must be cleaned carefully, and the engine oil cooler must be renewed in order to prevent further damage occurring later.*
- *The oil level must not be above the max. mark – otherwise the catalytic converter can be damaged.*
- *Refer to ⇒ Maintenance tables for viscosity grades, oil specifications and engine oil capacity.*
- *Oil spray jet for piston cooling ⇒ page 195 .*

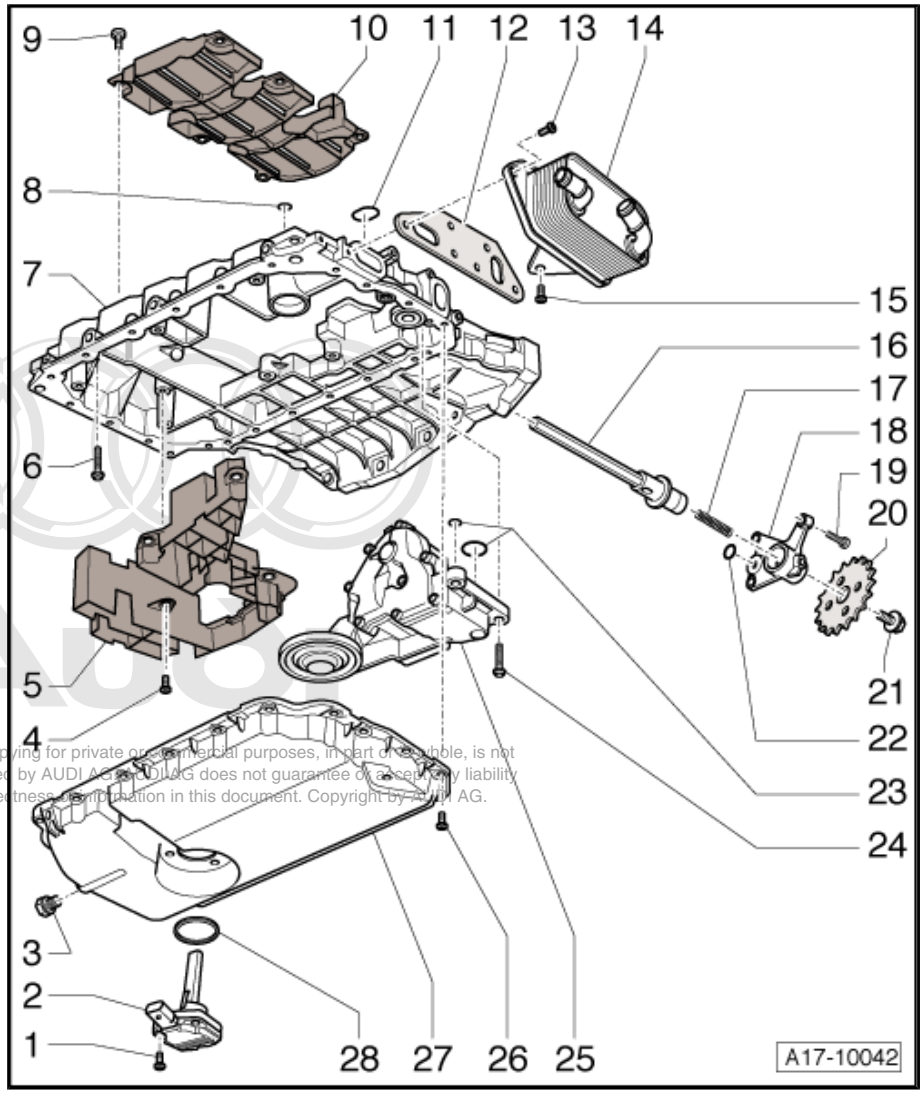

1 - 9 Nm

- ❑ Bolt or nut (depending on version)
- ❑ Apply locking fluid when installing; refer to ⇒ Electronic parts catalogue

2 - Oil level and oil temperature sender - G266-

- ❑ Removing and installing ⇒ page 198

3 - Oil drain plug, 30 Nm

- ❑ With seal
- ❑ Renew seal

4 - 9 Nm

5 - Baffle plate (bottom)

6 - 16 Nm

- ❑ Tighten in stages and in diagonal sequence

7 - Sump (top section)

- ❑ Removing and installing ⇒ page 203

8 - O-ring

- ❑ Renew

9 - 9 Nm

- ❑ Apply locking fluid when installing; refer to ⇒ Electronic parts catalogue

10 - Baffle plate (top)

11 - Seal

- ❑ Renew

12 - Gasket

- ❑ Renew

13 - 9 Nm

14 - Engine oil cooler

- ❑ See note ⇒ page 193
- ❑ Removing and installing ⇒ page 196
- ❑ With oil cooler bypass valve

15 - 9 Nm

16 - Oil pump drive shaft

17 - Compression spring

18 - Bearing bracket

19 - 9 Nm

20 - Chain sprocket for oil pump

- ❑ Can only be fitted in one position on drive shaft

21 - 30 Nm + 90° ($^1/_4$ turn) further

- ❑ Renew

- ❑ To loosen, use pin wrench - 3212- to counterhold chain sprocket

22 - O-ring

- ❑ Renew

23 - O-rings

- ❑ Renew

24 - 20 Nm

25 - Oil pump

- ❑ Do not dismantle
- ❑ With pressure relief valve for cold condition (11 bar) and pressure control valve (4.3 bar)
- ❑ Removing and installing

26 - Bolt

Sump (bottom section), aluminium version:

- ❑ 9 Nm
- ❑ Tighten in stages and in diagonal sequence

Sump (bottom section), sheet-metal version:

- ❑ Renew
- ❑ 5 Nm + 90° ($^1/_4$ turn) further
- ❑ Tighten in stages and in diagonal sequence

27 - Sump (bottom section)

- ❑ Different versions available ⇒ Electronic parts catalogue
- ❑ Removing and installing ⇒ page 199

28 - Seal

- ❑ Renew

Oil spray jet for piston cooling

1 - Apply locking fluid when installing bolt (tightening torque 9 Nm); refer to ⇒ Electronic parts catalogue

2 - Oil spray jet with spray nozzle valve

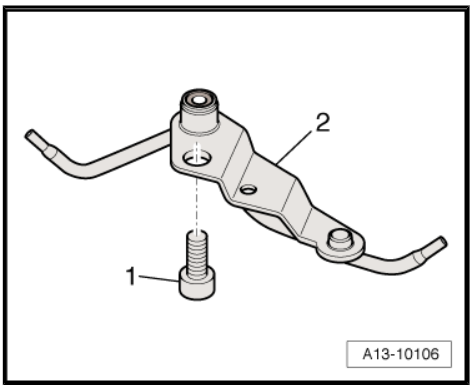

1.2 Removing and installing engine oil cooler

Special tools and workshop equipment required

- Used oil collection and extraction unit - V.A.G 1782-
- Drip tray for workshop hoist - VAS 6208-
- Hose clamps, up to 25 mm - 3094-

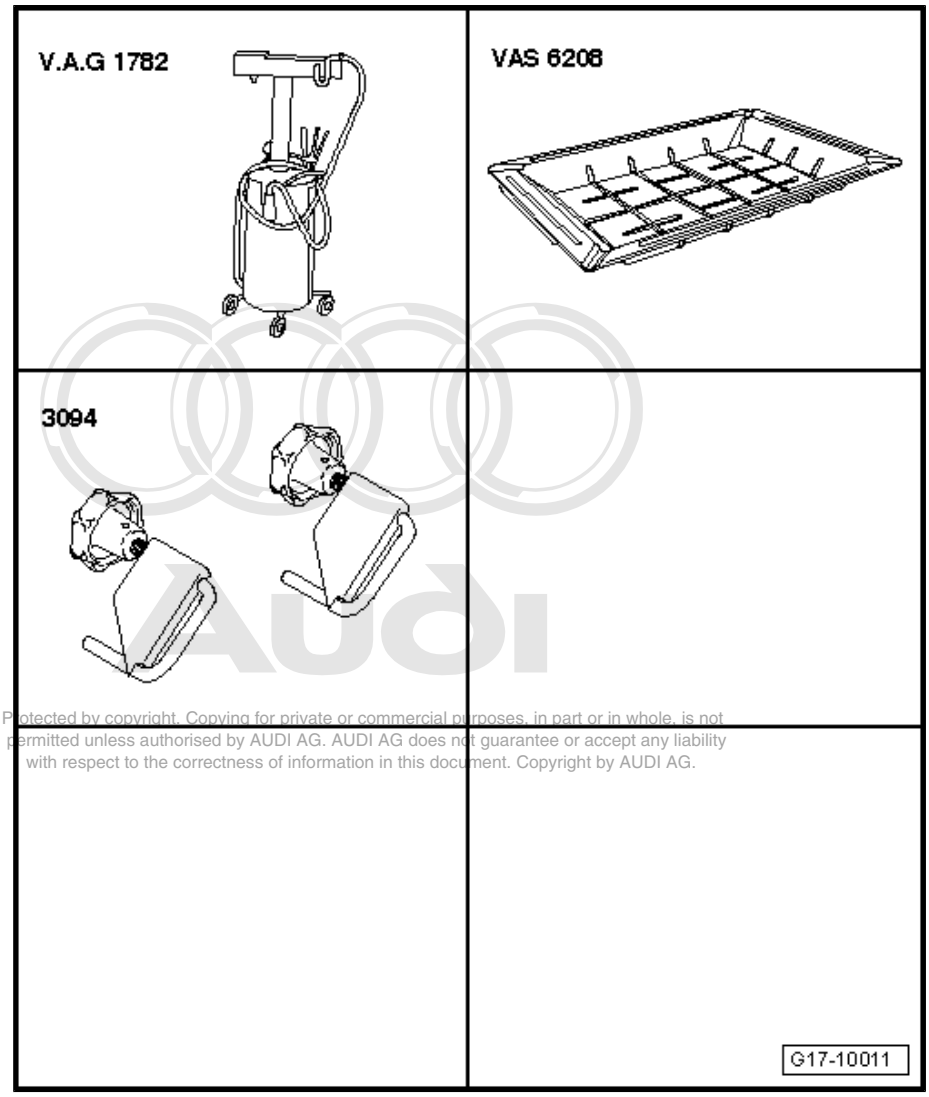

Removing

> ⚠ WARNING
>
> *Hot steam or hot coolant can escape when coolant expansion tank is opened; cover filler cap with cloth and open carefully.*

– Open filler cap on coolant expansion tank.

– If fitted, remove bolts -arrows- securing exhaust pipe for auxiliary/additional heater to noise insulation.

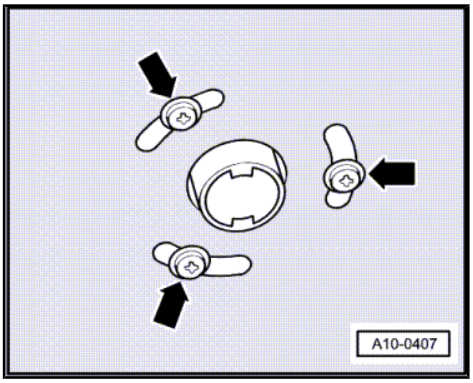

– Release quick-release fasteners -1- and -2- and take off noise insulation.

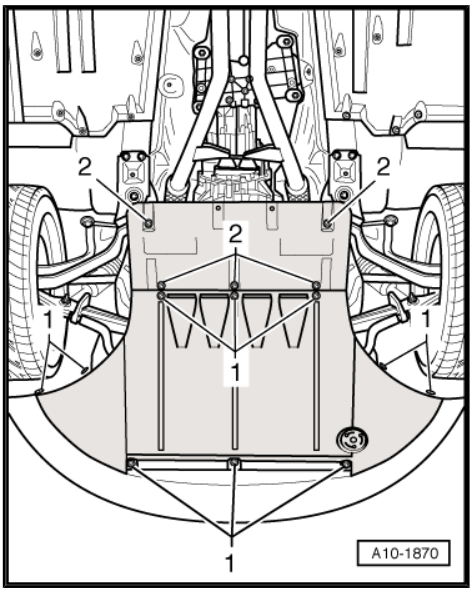

– Place drip tray for workshop hoist - VAS 6208- under engine.
– Clamp off coolant hoses -1- and -2- using hose clamps - 3094- .
– Disconnect coolant hoses at engine oil cooler and drain off coolant.
– Place used oil collection and extraction unit - V.A.G 1782- under engine.
– Unscrew bolts -arrows- and detach engine oil cooler.

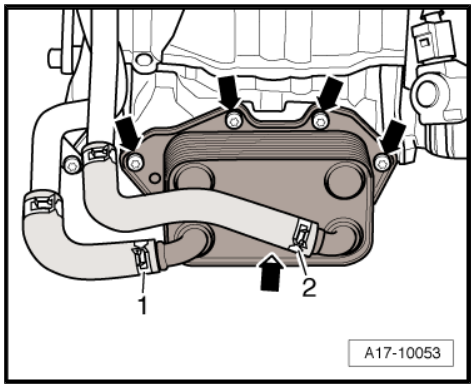

Installing

Installation is carried out in the reverse order; note the following:

Note

- *Renew seals and gaskets.*
- *Secure all hose connections with the correct type of hose clips (same as original equipment) ⇒ Electronic parts catalogue .*

– Fill up with engine oil and check oil level ⇒ page 217 .
– Fill cooling system ⇒ page 224 .

Tightening torques

Component	Nm
Engine oil cooler to sump (top section)	9
Oil drain plug	30

1.3 Removing and installing oil level and oil temperature sender - G266-

Special tools and workshop equipment required

- Used oil collection and extraction unit - V.A.G 1782-

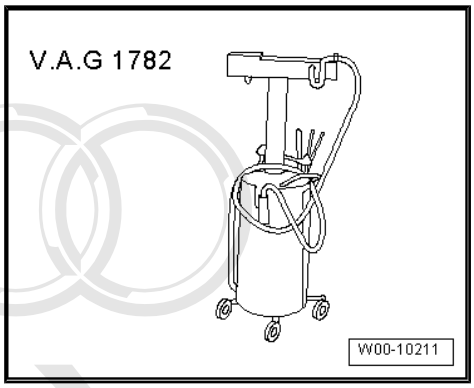

Removing

– Release quick-release fasteners -1- and remove bolts (if fitted) to remove front noise insulation.

– Place used oil collection and extraction unit - V.A.G 1782- underneath engine and drain off engine oil.

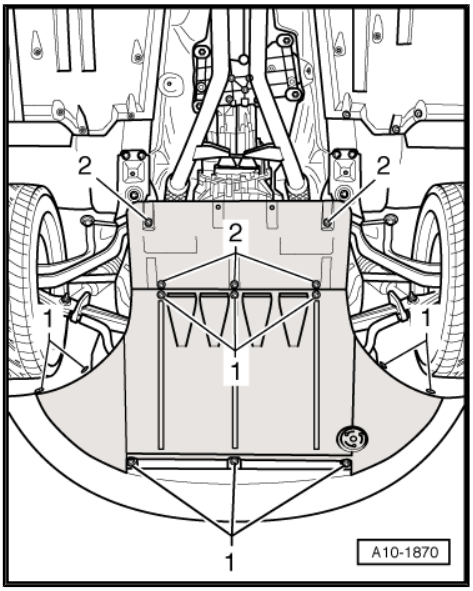

– Unplug electrical connector -3-.

– Remove nuts -1- and detach oil level and oil temperature sender - G266- -item 4-.

Installing

• Tightening torque ⇒ page 193

Installation is carried out in the reverse order; note the following:

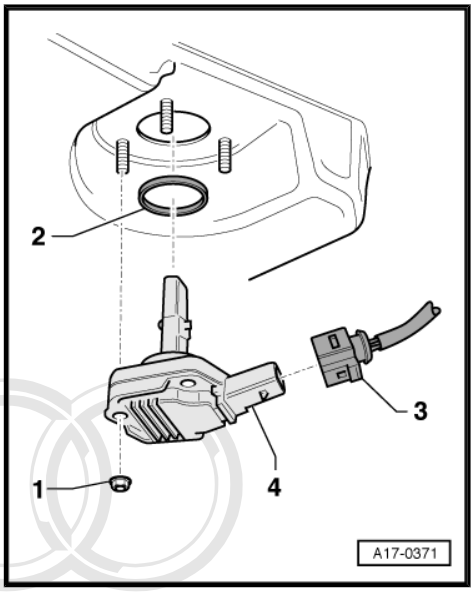

Note

Renew seal -2-.

– Fill with engine oil and check oil level ⇒ Maintenance ; Booklet 404 .

1.4 Removing and installing sump (bottom section)

Special tools and workshop equipment required

♦ Used oil collection and extraction unit - V.A.G 1782-

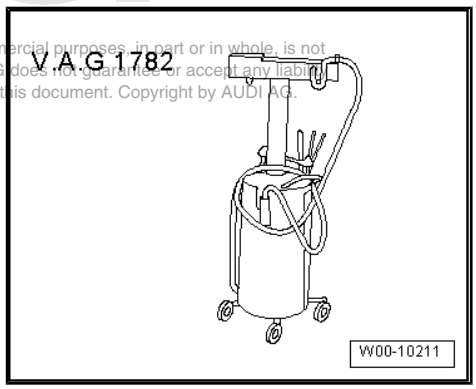

♦ Electric drill with plastic brush attachment

♦ Safety goggles

♦ Sealant ⇒ Electronic parts catalogue

Removing

– If fitted, remove bolts -arrows- securing exhaust pipe for auxiliary/additional heater to noise insulation.

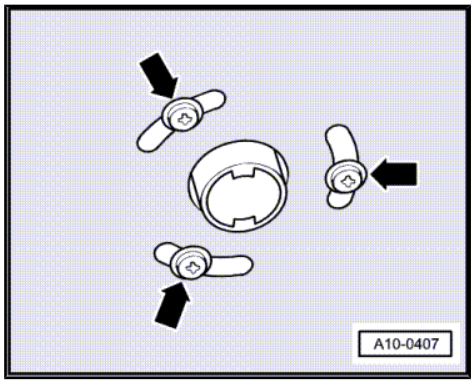

– Release quick-release fasteners -1- and -2- and take off noise insulation.

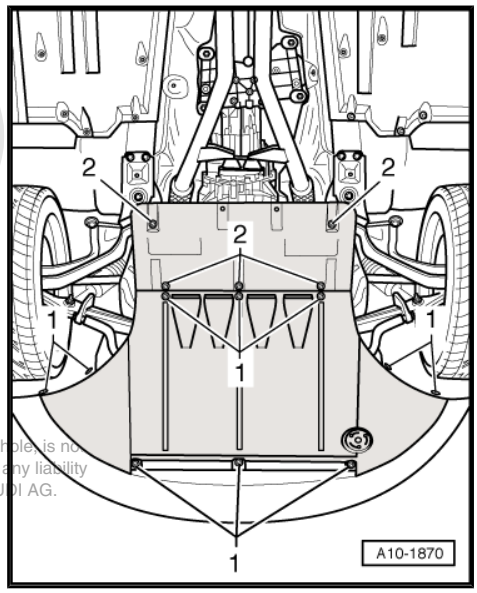

– Place used oil collection and extraction unit - V.A.G 1782- under engine.
– Drain off engine oil.
– Unscrew bolts -arrows- and detach engine oil cooler with coolant hoses -1- and -2- attached.

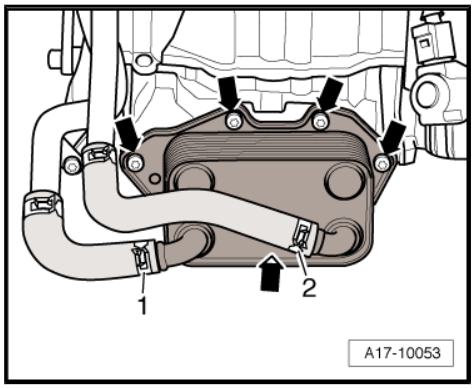

– Remove retainer for ATF pipes -1- and -2-.
– Unscrew bolts -3- and -5- at coolant pipe (front).
– Unplug electrical connector -4- at oil level and oil temperature sender - G266- -arrow- and move wiring clear.
– Remove bolts for sump (bottom section) -6-.
– Release sump (bottom section) from bonded joint, taking care not to bend sump (sheet-metal version).

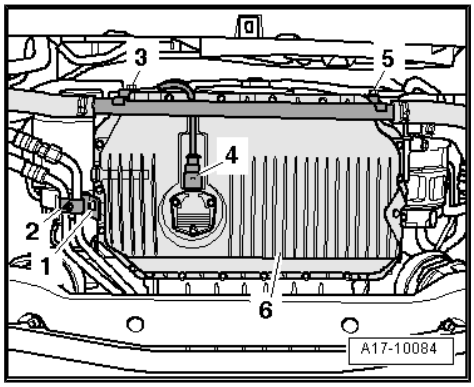

Installing

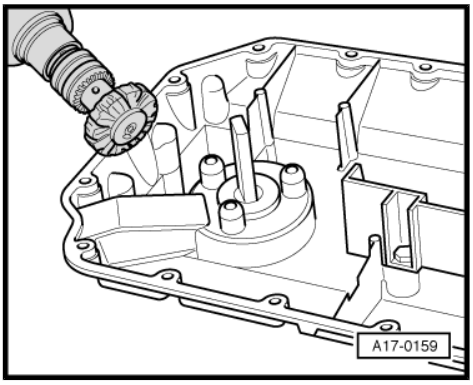

Note

- *Renew seals and gaskets.*
- *On the sheet-metal version, the sump (bottom section) must be renewed if its coating is damaged or if it is bent.*

WARNING

Wear safety goggles.

– Remove sealant residue from bottom and top sections of sump with rotating plastic brush or similar.
– Clean sealing surfaces; they must be free of oil and grease.

Note

On the sheet-metal version, take care not to damage the coating on the sump (bottom section).

– Cut off tube nozzle at front marking (diameter of nozzle approx. 1 mm).

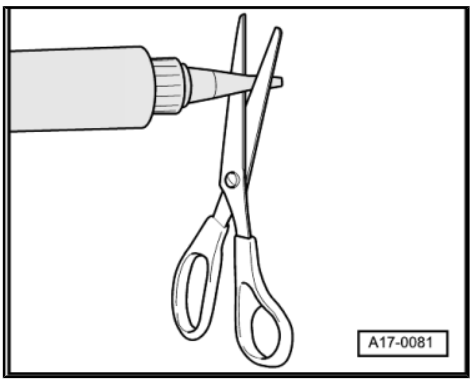

– Apply bead of sealant -arrow- onto clean sealing surface of sump (bottom section) as illustrated.

• The bead of sealant should be approx. 1.5 mm wide.

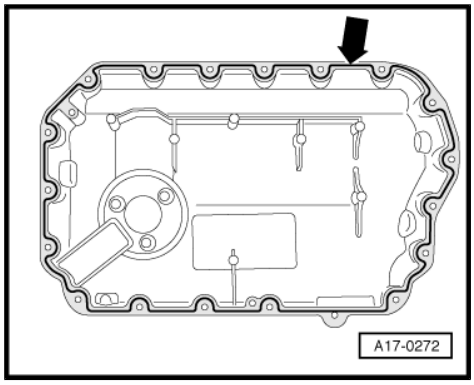

Note

♦ *The bead of sealant must not be thicker than specified, otherwise excess sealant can enter the sump (bottom section) and obstruct the strainer in the oil intake pipe.*

♦ *The sump (bottom section) must be installed within 5 minutes after applying sealant.*

– Fit sump (bottom section) and tighten all bolts initially to 5 Nm in diagonal sequence.

– Tighten bolts on sump (bottom section) in diagonal sequence.

– Install engine oil cooler ⇒ page 196 .

– Fill up with engine oil and check oil level ⇒ page 217 .

Tightening torques

Component	Nm
Engine oil cooler to sump (top section)	9
Sump (bottom section), aluminium version to sump (top section)	9 1)
Sump (bottom section), sheet-metal version to sump (top section)	5 + 90° 1)2)3)
Oil drain plug	30

• 1) Tighten in diagonal sequence.

• 2) Renew bolts.

• 3) 90° = one quarter turn.

1.5 Removing and installing oil pump

Removing

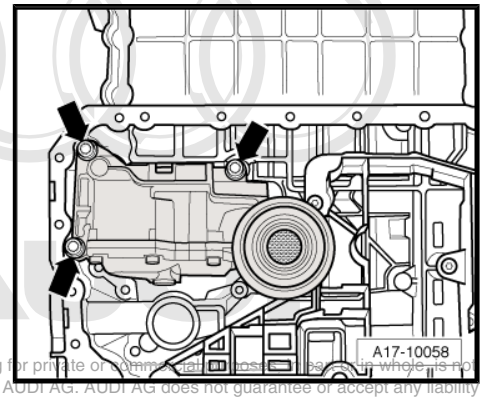

- Remove sump (bottom section) ⇒ page 199 .
- Remove bolts -arrows-.
- Detach oil pump from drive shaft by pulling it to front, move drive shaft slightly to rear if necessary.

Installing

Installation is carried out in the reverse order; note the following:

Note

Renew O-rings.

- Fit oil pump onto drive shaft and tighten bolts.
- Install sump (bottom section) ⇒ page 199 .
- Fill up with engine oil and check oil level ⇒ page 217 .

Tightening torque

Component	Nm
Oil pump to sump (top section)	20

1.6 Removing and installing sump (top section)

Special tools and workshop equipment required

- Used oil collection and extraction unit - V.A.G 1782-

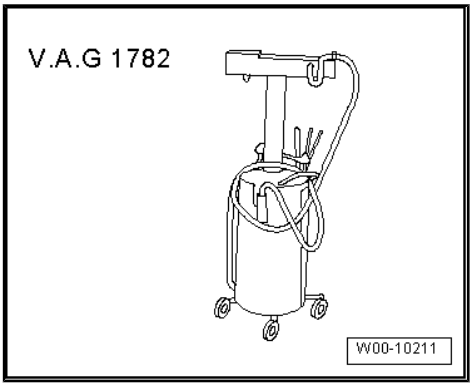

- Safety goggles
- Electric drill with plastic brush attachment
- Sealant ⇒ Electronic parts catalogue

Removing

- Secure engine to engine stand ⇒ page 74 .
- Remove damper unit ⇒ page 94 and flywheel ⇒ page 95 on vehicles with multitronic gearbox.
- Remove drive plate on vehicles with automatic gearbox 09L ⇒ page 97 .
- Place used oil collection and extraction unit - V.A.G 1782- under engine.
- Drain off engine oil.

– Remove sump (bottom section) ⇒ page 199 .
– Remove oil pump ⇒ page 203 .
– Unscrew bolts -arrows- and remove baffle plate (bottom).

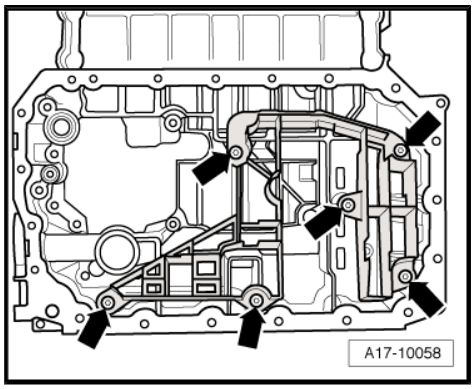

– Unscrew bolts -1 ... 4- from timing chain cover (bottom).

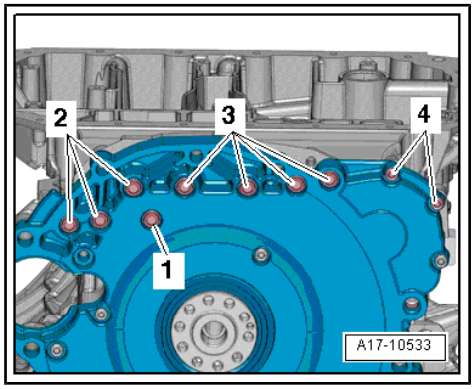

– Remove bolts -1 ... 6- for sump (top section).
– Press sump (top section) off spring pins on cylinder block.

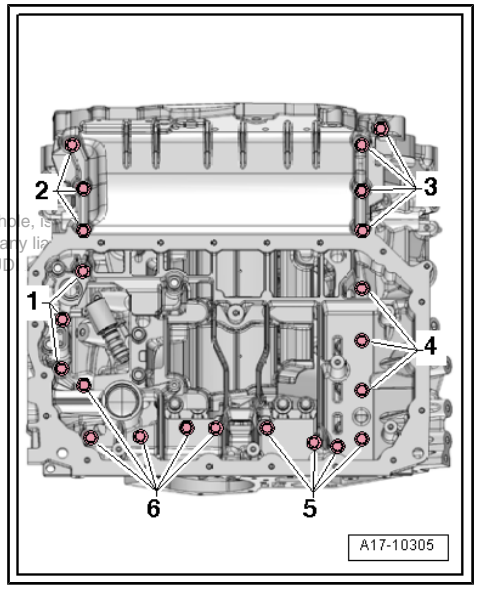

Installing

Note

Renew gaskets, seals and O-rings.

– Remove old sealant from grooves on sump (top section) and on timing chain cover (bottom) -arrows- using a small screwdriver.

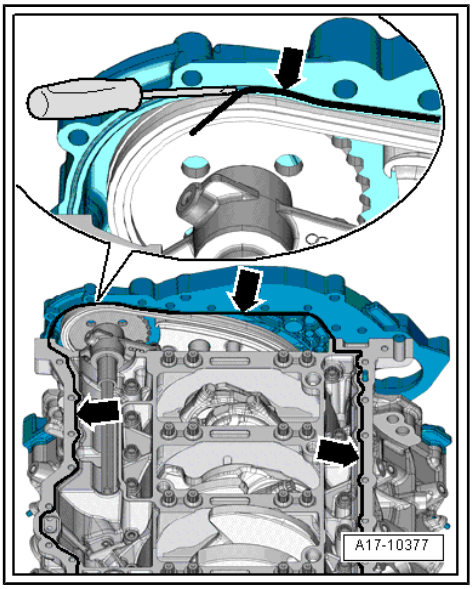

Caution

Protect lubrication system and bearings against contamination.

- *Cover exposed parts of the engine.*

WARNING

Risk of eye injury.

- *Wear safety goggles.*

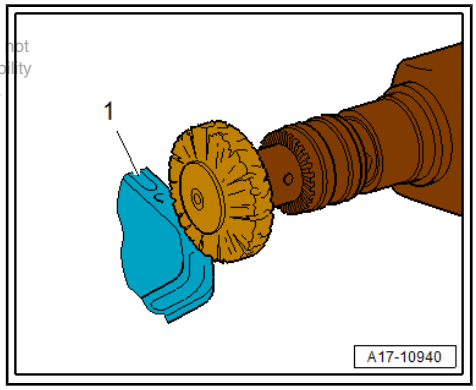

– Remove sealant residue on sump (top section) -1- using rotating plastic brush or similar.

– Mask oil return channel with adhesive tape -1-.

– Cover cylinder block with a cloth -2- to protect against metal shavings.

– Also mask open threaded holes with adhesive tape to protect against metal shavings.

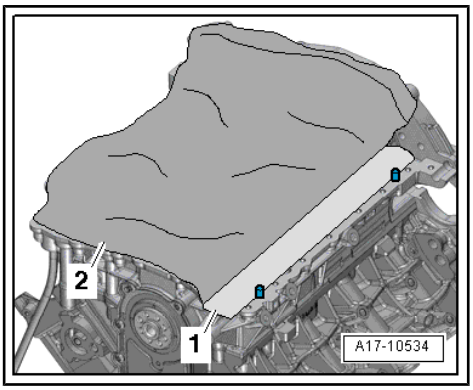

– Secure a strip of sheet metal (2.5 mm thick and approx. 65 x 100 mm) -item 1- next to dowel sleeve using universal mole grips (300 mm) - VAS 5433- .

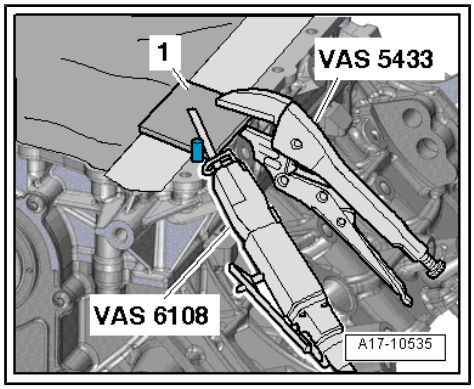

Note

The metal strip serves as a stop when sawing; at the same time it protects the sealing surface of the retaining frame.

WARNING

Wear safety goggles.

– Saw off dowel sleeve so it is flush with metal strip using pneumatic jig-saw - VAS 5108- .

– Repeat procedure for second dowel sleeve.

– Deburr both dowel sleeves.

– Chamfer both holes for dowel sleeves (1.5 mm) on sump (top section) using countersink.

– Clean sealing surfaces on sump (top section) and timing chain cover (bottom); they must be free of oil and grease.

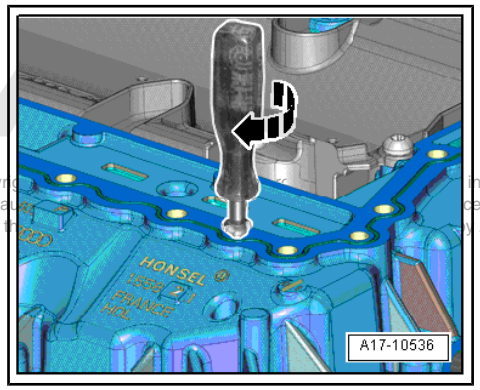

Note

Note the use-by date of the sealant.

– Cut off nozzle of tube at front marking (∅ of nozzle approx. 2 mm).

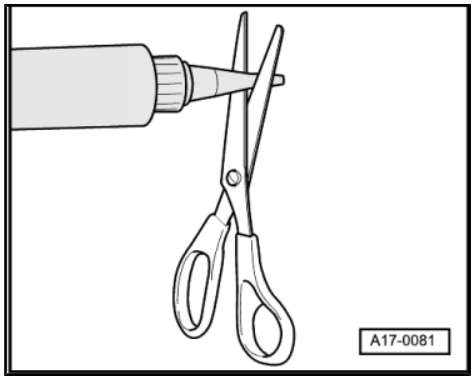

– Apply bead of sealant -arrow- onto clean sealing surface of sump (top section) as illustrated.

- The grooves on the sealing surfaces must be completely filled with sealant.
- The bead of sealant must project 1.5 … 2.0 mm above the sealing surface.

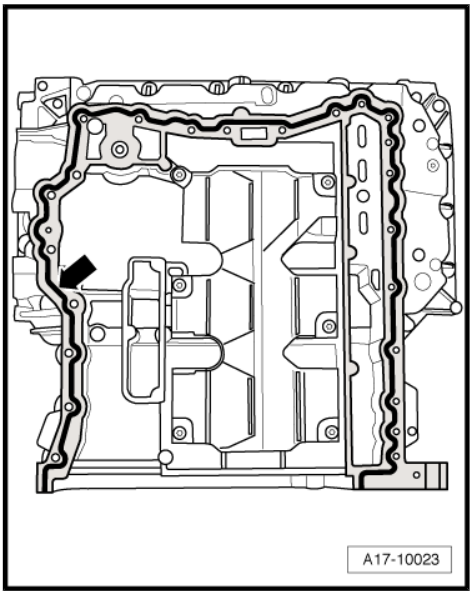

– Apply sealant bead -arrow- onto clean sealing surface of timing chain cover (bottom), as illustrated.

- The groove on the sealing surface must be completely filled with sealant.
- The bead of sealant must project 1.5 … 2.0 mm above the sealing surface.
- Apply sealant bead all the way into corners.

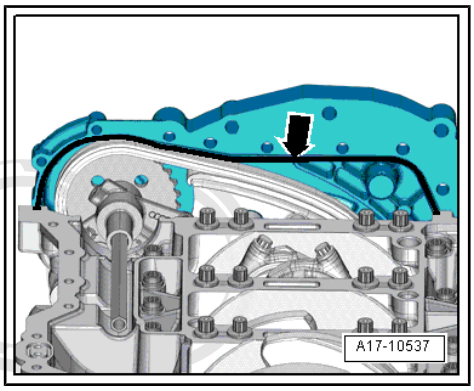

Caution

Make sure lubrication system is not clogged by excess sealant.

- *The bead of sealant must not be thicker than specified.*

Note

The sump (top section) must be installed within 5 minutes after applying the sealant.

– Fit seal -1- and O-ring -2- in retaining frame.

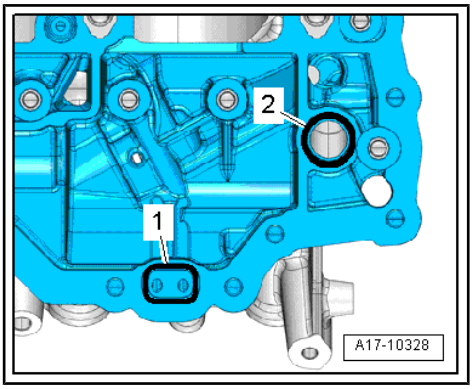

– Fit sump (top section), paying attention to dowel sleeves, and tighten bolts -1 ... 6- in diagonal sequence initially to 5 Nm.

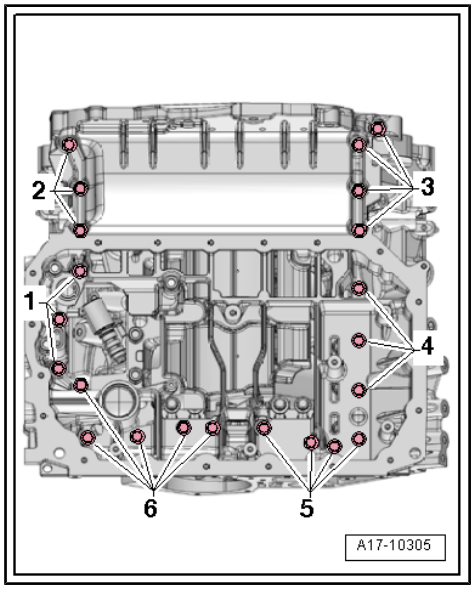

– Pre-tighten bolts -1 ... 4- to 5 Nm in diagonal sequence.

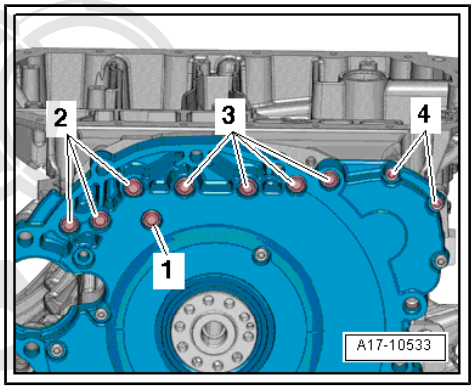

– Tighten sump (top section) ⇒ Item 26 (page 195)

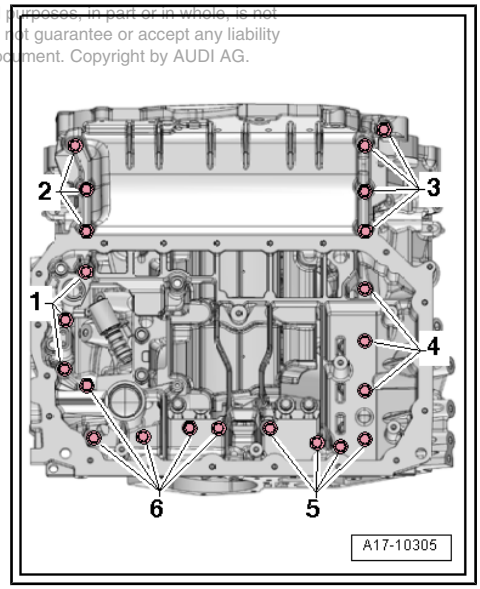

– Tighten bolts -1 ... 4- in diagonal sequence to final setting; tightening torque and sequence ⇒ page 111 .

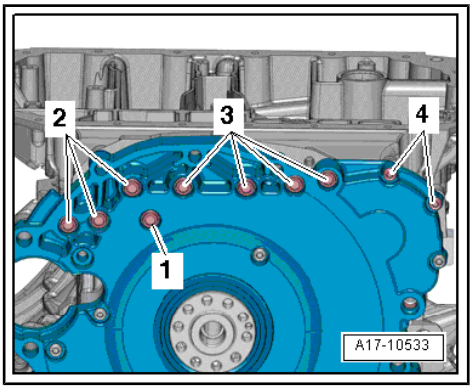

Remaining installation steps are carried out in reverse sequence; note the following:

– Install oil pump ⇒ page 203 .
– Install sump (bottom section) ⇒ page 199 .
– Install timing chain cover (bottom) ⇒ page 106 .
– Install flywheel ⇒ page 95 and damper unit ⇒ page 94 on vehicles with multitronic gearbox.
– Install drive plate on vehicles with automatic gearbox 09L ⇒ page 97 .
– Fill up with engine oil and check oil level ⇒ page 217 .

Tightening torques

Component	Nm
Sump (top section) to cylinder block	16 1)
Baffle plate (top) to sump (top section)	9 2)
Baffle plate (bottom) to sump (top section)	9

- 1) Tighten in diagonal sequence.
- 2) Apply locking fluid when installing; refer to ⇒ Electronic parts catalogue for locking fluid.

1.7 Oil filter housing - exploded view

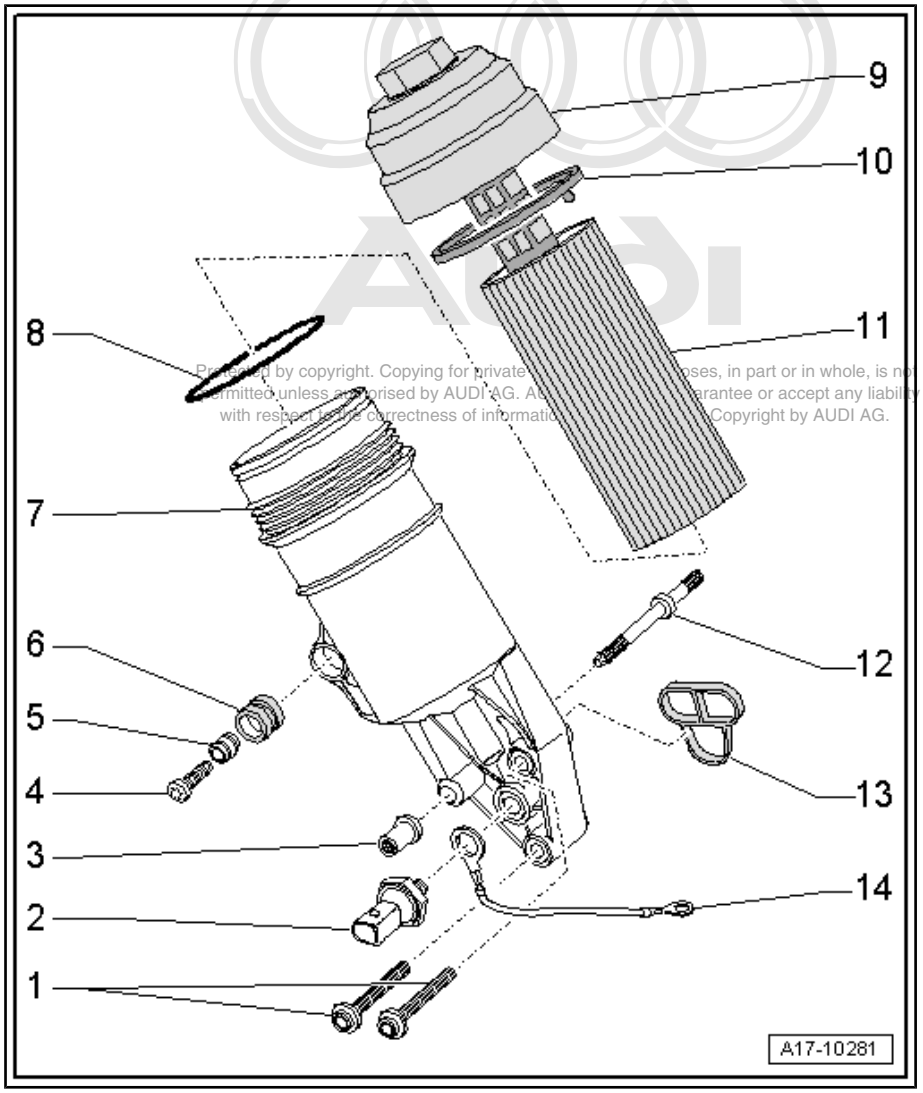

1 - 13 Nm

2 - Oil pressure switch - F1-
- ❑ Tighten to 20 Nm
- ❑ Black insulation
- ❑ Removing and installing ⇒ page 214
- ❑ Checking ⇒ page 215

3 - Multi-point socket flange nut, 13 Nm

4 - 13 Nm

5 - Sleeve

6 - Rubber grommet

7 - Oil filter housing
- ❑ With filter bypass valve, 3.0 bar
- ❑ With oil retention valve
- ❑ The oil retention valve cannot be renewed

8 - O-ring
- ❑ Renew
- ❑ Installing ⇒ page 211

9 - Sealing cap, 25 Nm

10 - Seal
- ❑ Renew
- ❑ Removing and installing ⇒ page 210

11 - Oil filter element
- ❑ Removing and installing ⇒ Maintenance ; Booklet 404

12 - Stud, 16 Nm

13 - Gasket
- ❑ Renew

14 - Seal with earth wire
- ❑ Renew

Renewing seal on sealing cap

– Take hold of tab -arrow A- and pull seal -2- out of sealing cap -1-.

– Fit new seal with semi-circular profile in groove -arrow B- in sealing cap.

• The tab -arrow A- must face upwards.

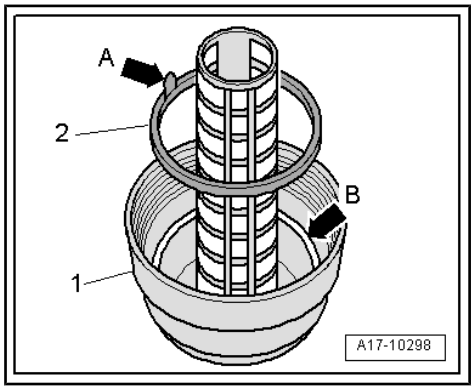

Installing O ring on oil filter housing

– Install O-ring -2- in groove -arrow- on oil filter housing -1-.

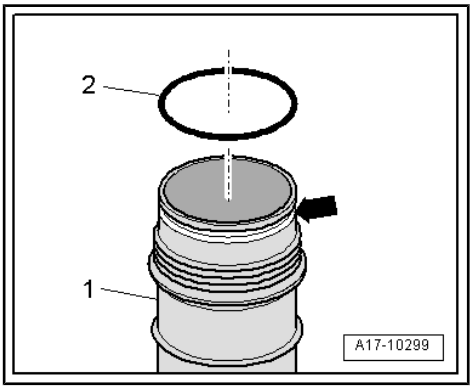

1.8 Removing and installing oil filter housing

Special tools and workshop equipment required

♦ Used oil collection and extraction unit - V.A.G 1782-

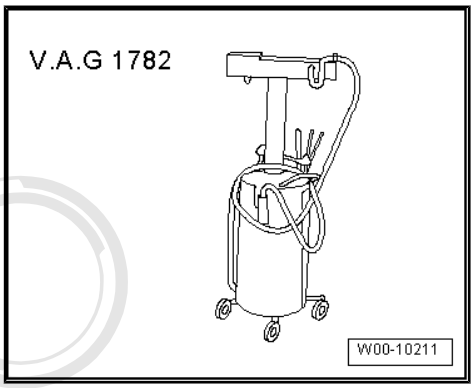

Removing

– Pull off engine cover panel (rear) -arrows-.

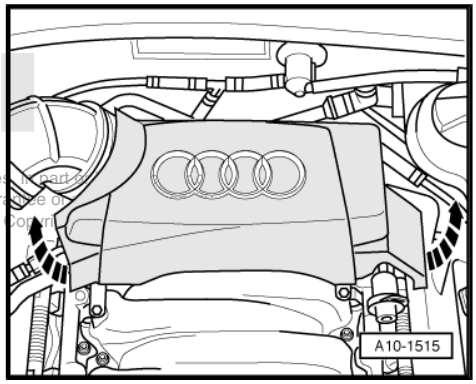

– Remove crankcase breather hose from cylinder head cover (left-side) and move clear.
– Unplug electrical connectors -1 ... 3-.
– Unscrew nut -arrow-.
– Unscrew centre hex stud located beneath the bracket.
– Remove bracket for electrical connectors -1- and -2-.
– Remove bracket for electrical connector -3-.

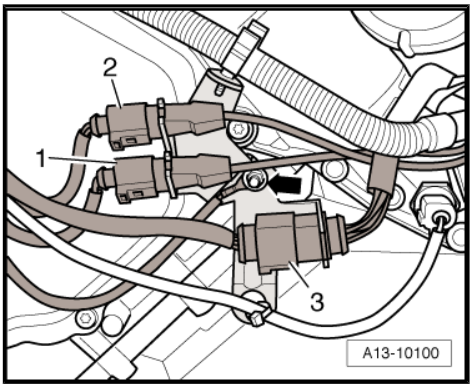

Note

In the following illustrations the steps to perform are shown from the rear and with the engine removed.

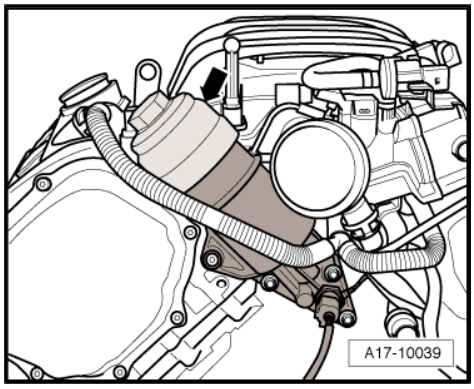

- Unscrew sealing cap -arrow- for oil filter housing.
- Remove oil filter element.
- Extract engine oil from oil filter housing using used oil collection and extraction unit - V.A.G 1782- .

Note

Place a cloth below the oil filter housing to catch escaping oil.

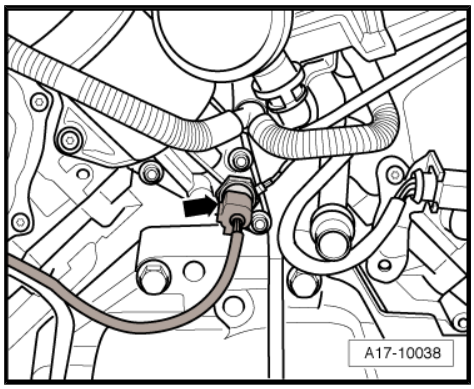

- Unplug electrical connector at oil pressure switch - F1- -arrow-.
- Unscrew oil pressure switch.

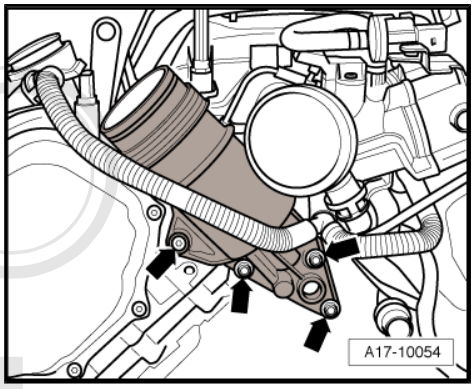

- Remove bolts -arrows-.
- Also unscrew multi-point socket flange nut ⇒ Item 3 (page 210) .
- Remove oil filter housing.

Installing

Installation is carried out in the reverse order; note the following:

Note

Renew gaskets, seals and O-rings.

- Fill up with engine oil and check oil level ⇒ page 217 .

Tightening torques

Component	Nm
Oil filter housing to engine	13
Oil pressure switch to oil filter housing	20
Sealing cap on oil filter housing	25
Bracket for electrical connectors to cylinder head	9

1.9 Oil retention valves, oil separator - exploded view

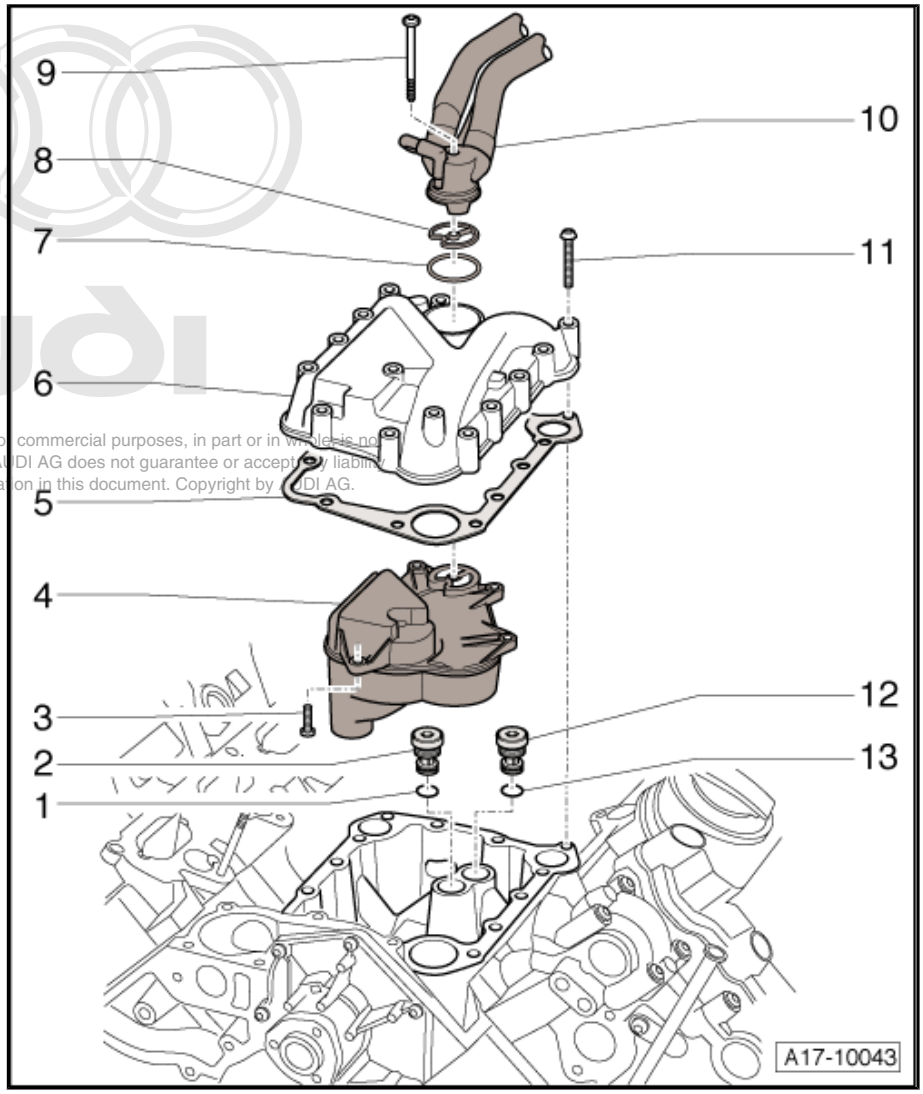

1 - O-ring
- ❑ Renew

2 - Oil retention valve, 20 Nm
- ❑ For oil supply to cylinder head (right-side)

3 - 9 Nm

4 - Oil separator
- ❑ Bolted into cover ⇒ Item 6 (page 213) from below

5 - Gasket
- ❑ Renew

6 - Cover
- ❑ With connection for crankcase breather
- ❑ To remove, first remove intake manifold (top section) and intake manifold (left and right bottom sections) ⇒ page 267 and ⇒ page 272

7 - O-ring
- ❑ Renew

8 - Gasket
- ❑ Renew

9 - 6 Nm

10 - Crankcase breather hoses
- ❑ Removing and installing ⇒ page 213

11 - 9 Nm

12 - Oil retention valve, 20 Nm
- ❑ For oil supply to cylinder head (left-side)

13 - O-ring
- ❑ Renew

1.10 Removing and installing crankcase breather hoses

Removing

Note

All cable ties which are released or cut open when removing must be fitted in the same position when installing.

– Remove intake manifold (top section) ⇒ page 267 .

– Disconnect crankcase breather hoses -arrows- from cylinder head covers.

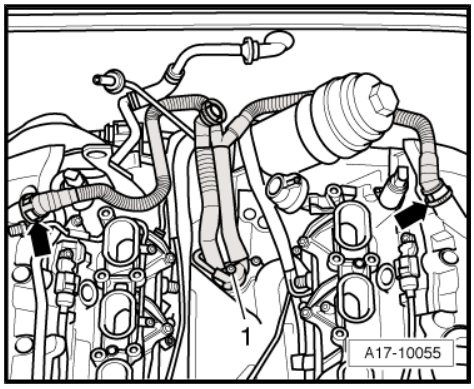

Note

On USA models, it is not possible to detach crankcase breather hoses from cylinder head covers without damaging hoses. Renew crankcase breather hoses after removal.

– Move crankcase breather hoses clear.

– Remove bolt -1- and take out hose connection with crankcase breather hoses.

Installing

Installation is carried out in the reverse order; note the following:

Note

- *Renew gaskets, seals and O-rings.*
- *Fit all cable ties in the original positions when installing.*

– Install intake manifold (top section) ⇒ page 267 .

Tightening torque

Component	Nm
Hose connection for crankcase breather hoses to cover	6

1.11 Removing and installing oil pressure switch - F1-

Removing

– Pull off engine cover panel (rear) -arrows-.

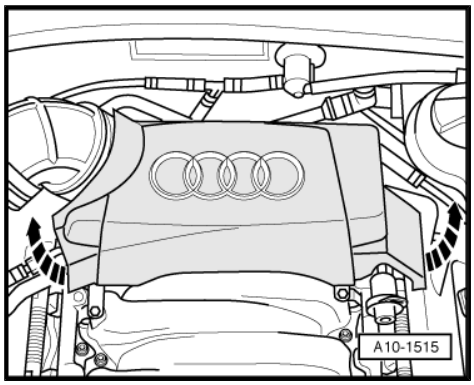

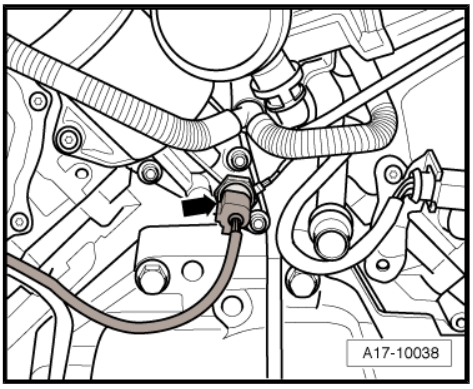

Note

Place a cloth below the oil filter housing to catch escaping oil.

– Unplug electrical connector at oil pressure switch - F1- -arrow-.
– Unscrew oil pressure switch.

Installing

Installation is carried out in the reverse order; note the following:

Note

Renew seal.

– Fill up with engine oil and check oil level ⇒ page 217 .

Tightening torque

Component	Nm
Oil pressure switch to oil filter housing	20

1.12 Checking oil pressure

Special tools and workshop equipment required

- Oil pressure tester - V.A.G 1342-
- Voltage tester - V.A.G 1527B-
- Auxiliary measuring set - V.A.G 1594C-

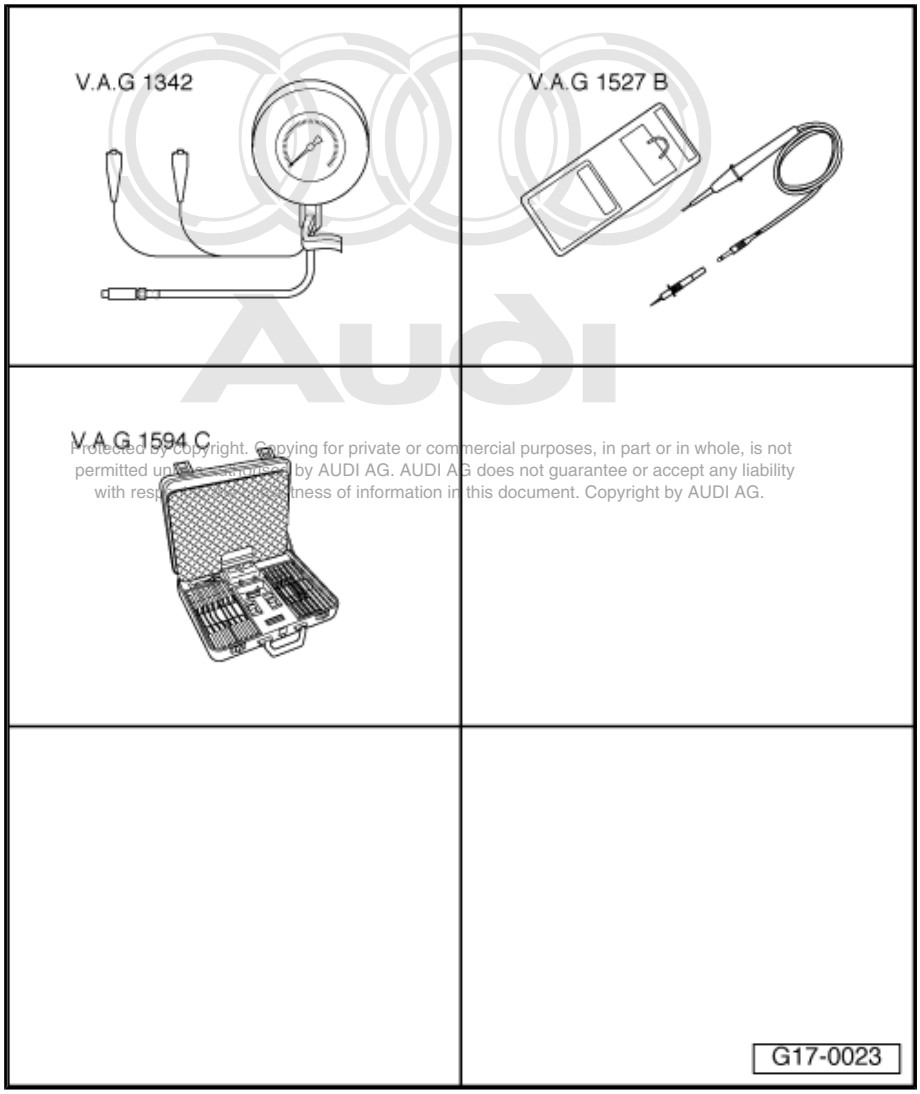

Test conditions

- Oil level OK
- Engine oil temperature approx. 80 °C

Preparation for test

– Remove oil pressure switch ⇒ page 214 .

– Connect oil pressure tester - V.A.G 1342- to threaded hole for oil pressure switch.

– Screw oil pressure switch -2- into oil pressure tester - V.A.G 1342- .

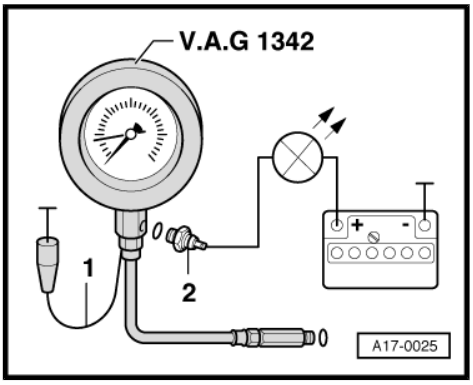

Checking oil pressure switch

– Connect brown wire -1- of oil pressure tester to earth (–).

– Connect voltage tester - V.A.G 1527B- with test leads from auxiliary measuring set - V.A.G 1594C- to oil pressure switch and battery positive (+).

• LED should not light up.

If LED lights up now:

– Renew oil pressure switch.

– Start engine.

Note

Observe tester and LED while starting, as switching point of oil pressure switch may already be exceeded when starting.

• LED should light up at 1.2 ... 1.6 bar.

If LED does not light up:

– Renew oil pressure switch.

Checking oil pressure

– Start engine.

• Minimum oil pressure at idling speed: 1.2 bar.

• Minimum oil pressure at 2000 rpm: 3.4 bar.

Assembling

– Install oil pressure switch ⇒ page 214 .

1.13 Engine oil

Refer to ⇒ Maintenance tables for viscosity grades, oil specifications and engine oil capacity.

1.14 Checking oil level

Test conditions

• Engine oil temperature at least 60 °C.

• Vehicle must be level (horizontal)

• Wait a few minutes after switching off the engine to allow the oil to flow back into the sump.

Test sequence

– Pull out the dipstick, wipe off with a clean cloth and insert it again as far as it will go.

– Pull out the dipstick again and read off the oil level.

Markings on oil dipstick:

a - Oil must be topped up.

b - Oil may be topped up.

c - Do not top up oil.

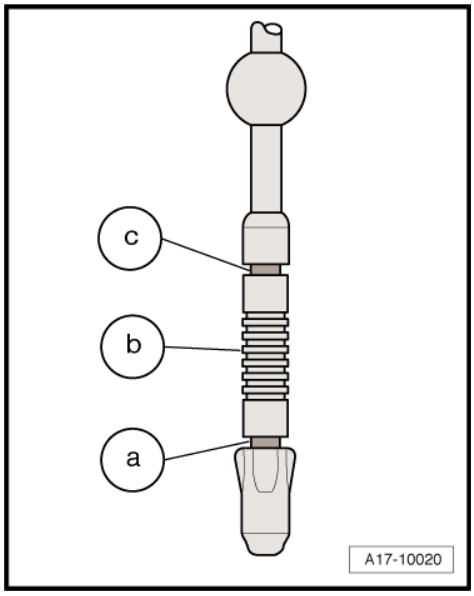

Note

- *The oil level must not be above the “max” marking -c- and not below the “min” marking -a-.*
- *If the oil level is above the “max.” mark on the dipstick there is a risk of damage to the catalytic converter.*

19 – Cooling

1 Removing and installing parts of cooling system

1.1 Connection diagram - coolant hoses, vehicles with auxiliary heater and multitronic gearbox

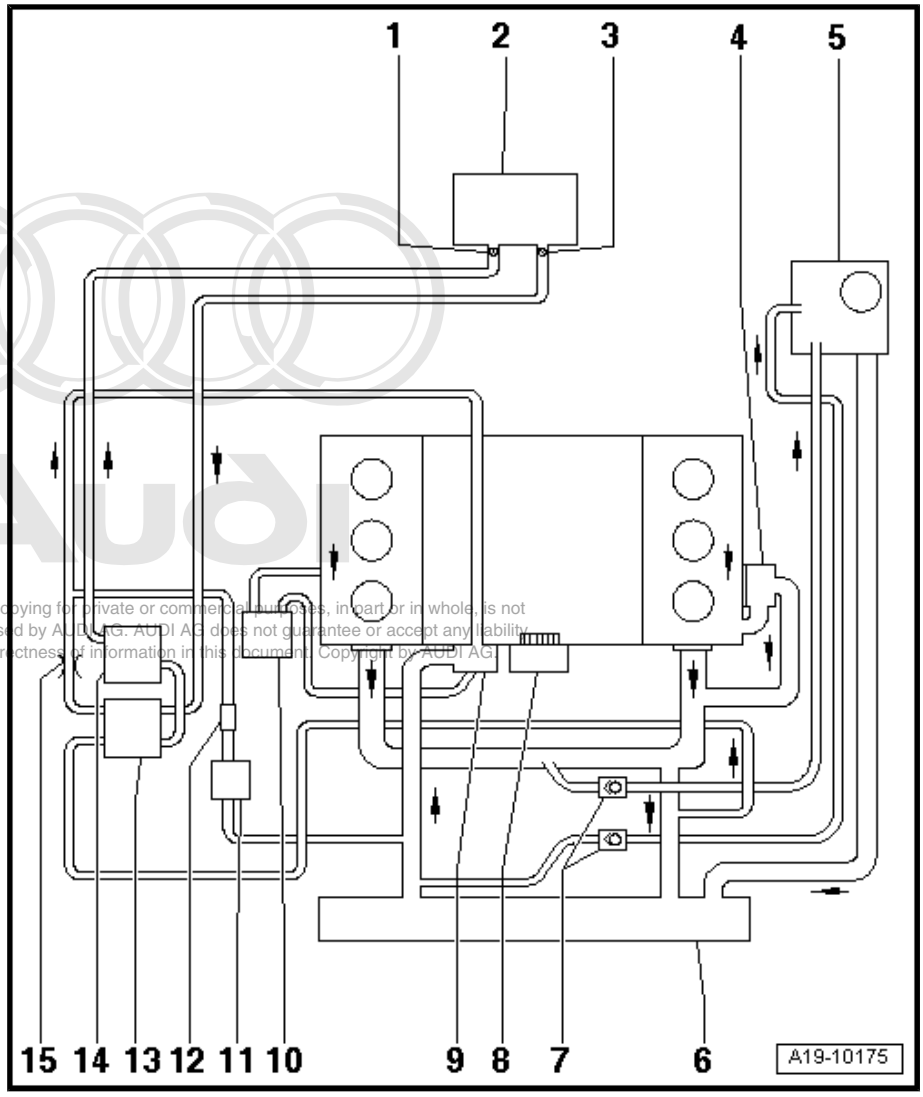

1 - Bleeder screw

2 - Heat exchanger for heater
- ❑ If renewed, refill system with fresh coolant

3 - Bleeder screw

4 - Engine oil cooler
- ❑ If renewed, refill system with fresh coolant
- ❑ Removing and installing ⇒ page 196

5 - Coolant expansion tank
- ❑ With filler cap
- ❑ Checking pressure relief valve in filler cap ⇒ page 222

6 - Cooler
- ❑ Removing and installing ⇒ page 196
- ❑ If renewed, refill system with fresh coolant

7 - Non-return valves

8 - Coolant pump
- ❑ Removing and installing ⇒ page 229

9 - Thermostat
- ❑ Removing and installing ⇒ page 231
- ❑ Checking ⇒ page 232

10 - Alternator

11 - ATF cooler
- ❑ For vehicles with multitronic gearbox

12 - Thermostat
- ❑ For ATF cooler

13 - Heater coolant shut-off valve - N279-

14 - Auxiliary heater

15 - Reducing adapter

1.2 Checking cooling system for leaks

Special tools and workshop equipment required

- Cooling system tester - V.A.G 1274 B-

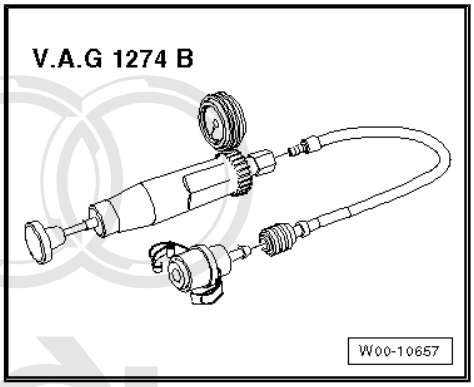

- Adapter for cooling system tester - V.A.G 1274/8-

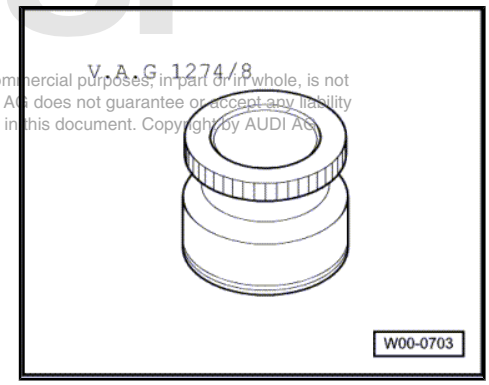

- Adapter for cooling system tester - V.A.G 1274/9-

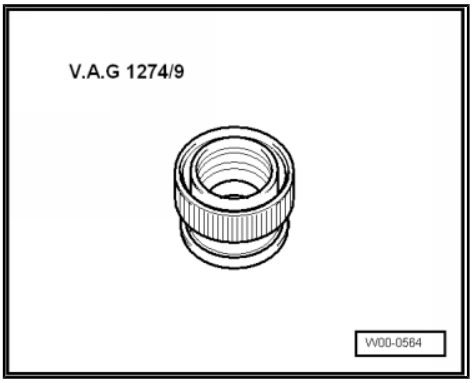

Test condition

- Engine must be warm.

Test sequence

> ⚠ **WARNING**
>
> *Hot steam or hot coolant can escape when coolant expansion tank is opened; cover filler cap with cloth and open carefully.*

– Open filler cap on coolant expansion tank.

– Attach cooling system tester - V.A.G 1274- with adapter - V.A.G 1274/8- to coolant expansion tank.
– Use hand pump on cooling system tester to create a pressure of approx. 1.0 bar.

If the pressure drops:

– Trace leak and repair.

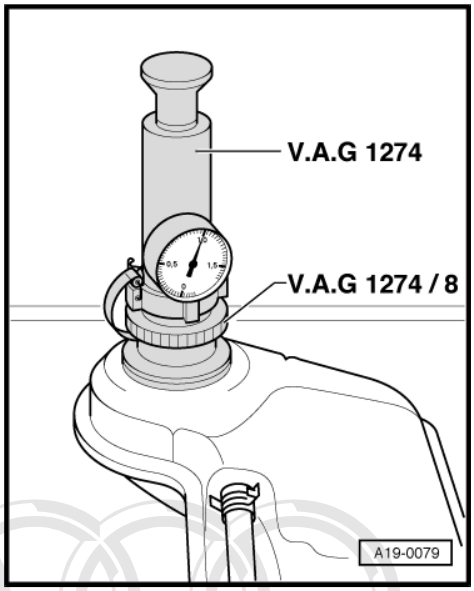

Checking pressure relief valve in filler cap

– Attach cooling system tester - V.A.G 1274- with adapter - V.A.G 1274/9- to filler cap.
– Use hand pump on cooling system tester to create pressure.
• The pressure relief valve should open at a pressure of 1.4 ... 1.6 bar.

If the pressure relief valve does not open as described:

– Renew filler cap.

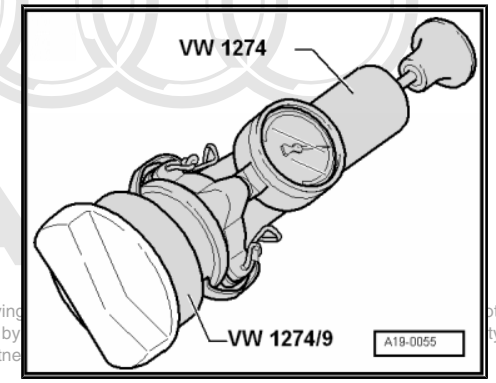

1.3 Draining and filling cooling system

Special tools and workshop equipment required

- Adapter for cooling system tester - V.A.G 1274/8-
- Pipe for cooling system tester - V.A.G 1274/10-
- Cooling system charge unit - VAS 6096-
- Drip tray for workshop hoist - VAS 6208-
- Hose clip pliers - VAS 6362-
- Refractometer - T10007 A-
- Safety goggles
- Protective gloves

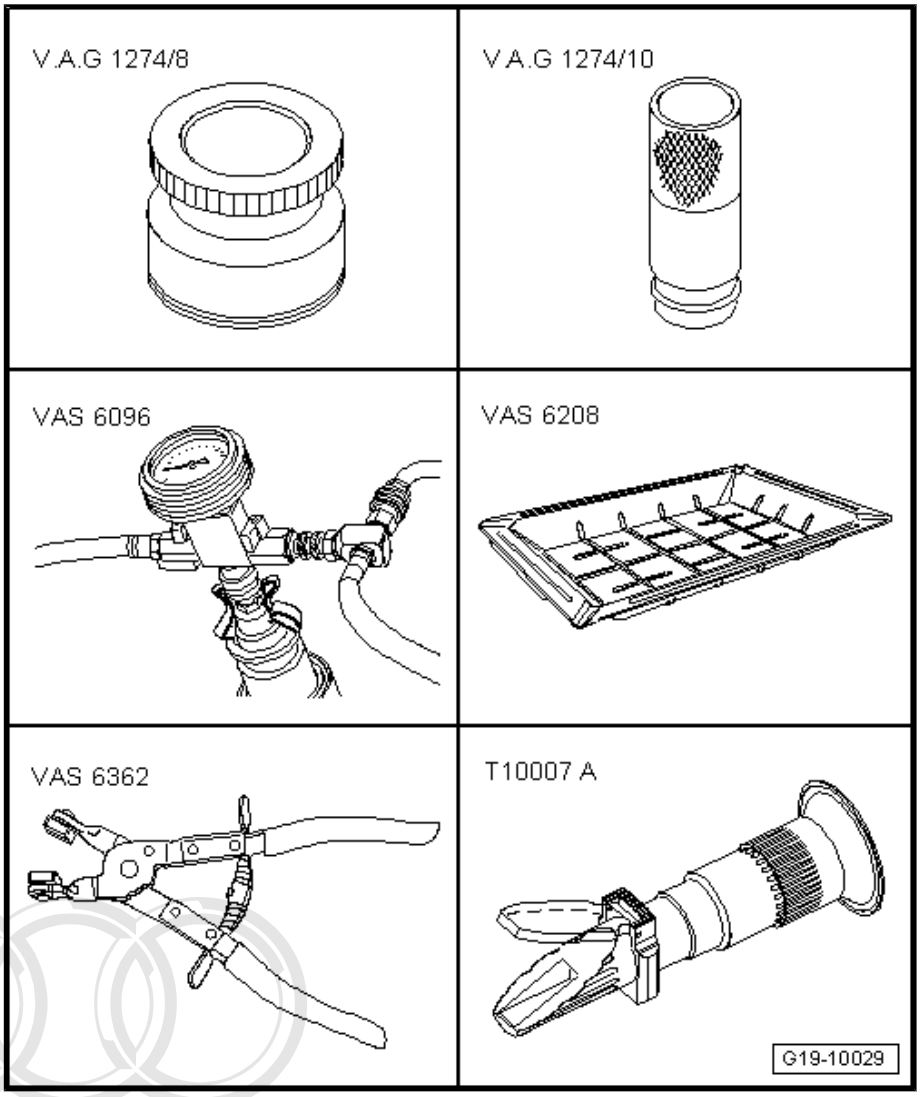

Draining

WARNING

Hot steam or hot coolant can escape when coolant expansion tank is opened; cover filler cap with cloth and open carefully.

– Open filler cap on coolant expansion tank.

– If fitted, remove bolts -arrows- securing exhaust pipe for auxiliary/additional heater to noise insulation.

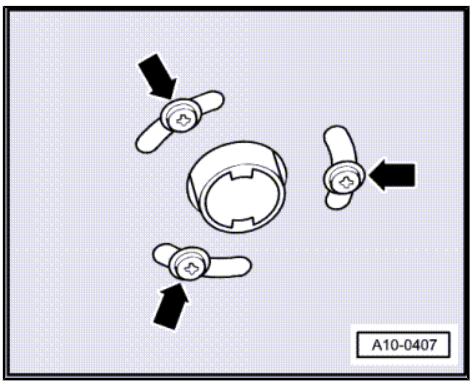

– Open quick-release fasteners -1- and remove noise insulation (front).

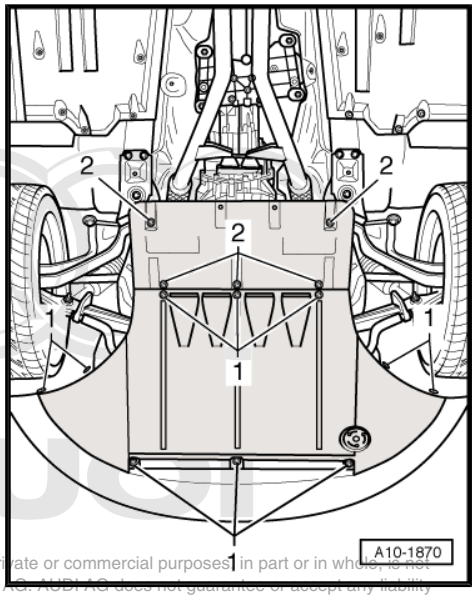

– Place drip tray for workshop hoist - VAS 6208- under engine.

– Detach coolant hose -arrow- at bottom left of radiator.

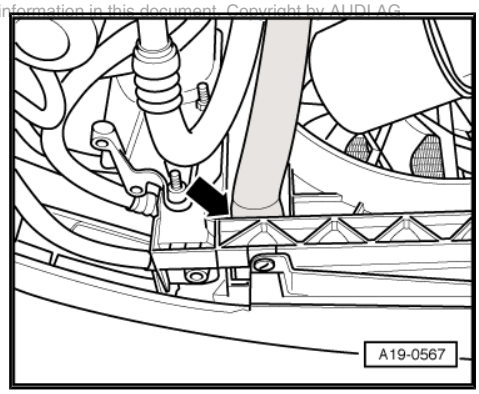

– Disconnect coolant hose -arrow- at thermostat before ATF cooler and drain off coolant.

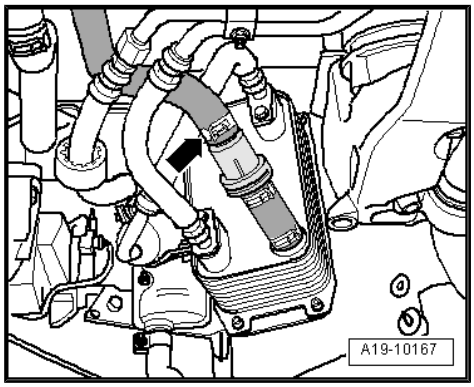

– Disconnect coolant hose -arrow- at engine oil cooler and drain off remaining coolant.

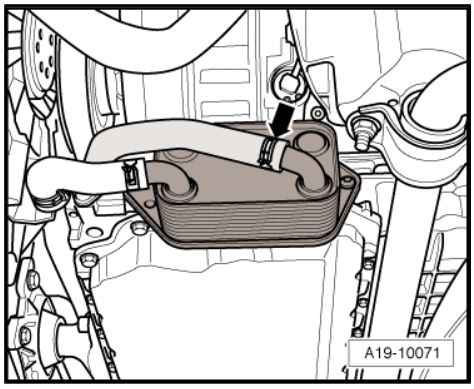

Filling

> ⚠ **Caution**
>
> ***Always use distilled water for mixing coolant additives as this ensures optimum corrosion protection.***

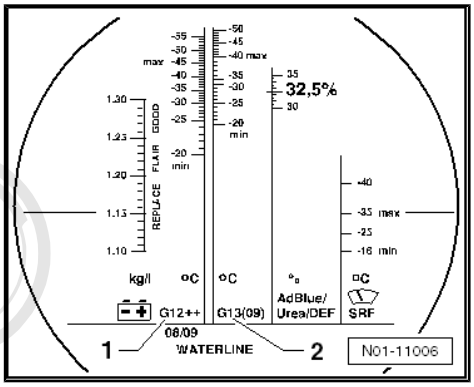

Note

- *The effectiveness of the coolant is greatly influenced by the quality of the water with which it is mixed. Because water may contain different substances depending on the country or even the region, the water quality to be used for cooling systems has been specified. Distilled water meets all the requirements and is therefore recommended for use when topping up or filling up with coolant.*
- *Use only coolant additives listed in the ⇒ Electronic parts catalogue (ETKA) . Other coolant additives could seriously impair in particular the anti-corrosion properties. The resulting damage could lead to loss of coolant and consequently to serious engine damage.*
- *Coolant with the recommended mixture ratio prevents frost and corrosion damage and stops scaling. At the same time it raises the boiling point of the fluid in the system. For this reason the cooling system must be filled all year round with the correct coolant additive.*
- *Because of its high boiling point, the coolant improves engine reliability under heavy loads, particularly in countries with tropical climates.*
- *The refractometer - T10007A- MUST be used to determine the current level of frost protection.*
- *The mixture must guarantee frost protection down to -25 °C (in countries with arctic climate: down to -36 °C). The amount of antifreeze can only be increased if greater frost protection is required in very cold climates. This must only be up to -48 °C, however, as otherwise the cooling efficiency of the coolant is impaired.*
- *The coolant concentration must not be reduced by adding water even in warmer seasons and in warmer countries. Frost protection must be provided to at least -25 °C.*
- *Read off the level of frost protection on the scale for the relevant coolant additive.*
- *The temperature indicated on the refractometer - T10007A- corresponds to the temperature at which the first ice crystals can form in the coolant.*
- *Do not reuse coolant.*
- *Only use water/coolant additive as a lubricant for coolant hoses.*

Recommended mixture ratio for coolant

- Coolant (40 %) and water (60 %) for frost protection to -25 °C
- Coolant (50 %) and water (50 %) for frost protection to -36 °C
- Coolant: ⇒ Electronic parts catalogue (ETKA)

Procedure:

– Connect coolant hose -arrow- to bottom left of radiator.

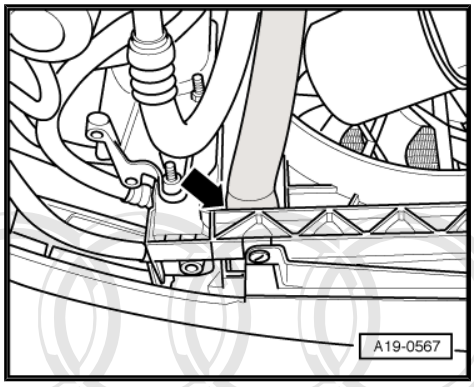

– Connect coolant hose -arrow- to thermostat before ATF cooler.

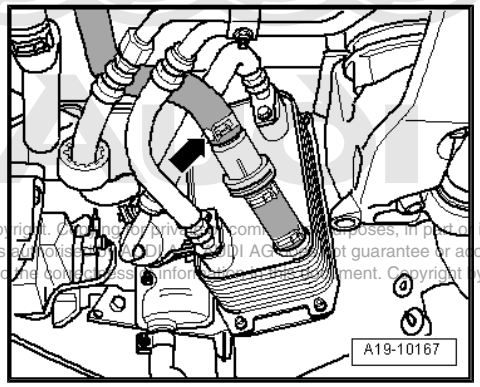

– Connect coolant hose to engine oil cooler -arrow-.

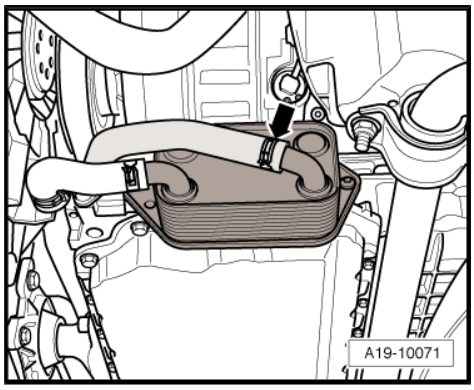

– Fill reservoir - VAS 6096/1- with at least 15 litres of premixed coolant (based on recommended ratio).
– Run vent hose -1- into a small container -2-. (The vented air draws along a small amount of coolant, which should be collected.)
– Close the two valves -A- and -B- by setting lever at right angle to direction of flow.
– Connect hose -3- to compressed air.
• Pressure: 6 ... 10 bar.

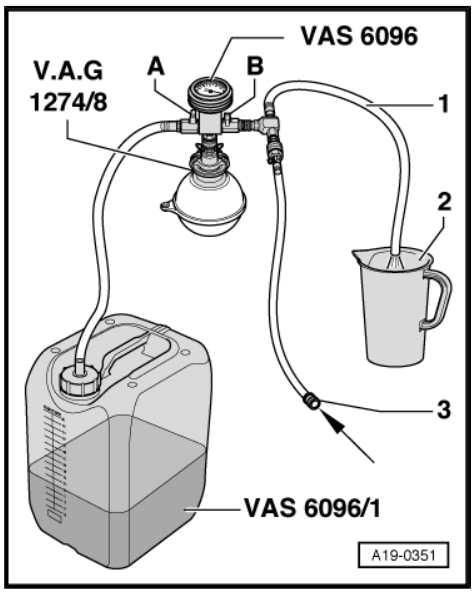

– Open valve -B- by setting lever in direction of flow.

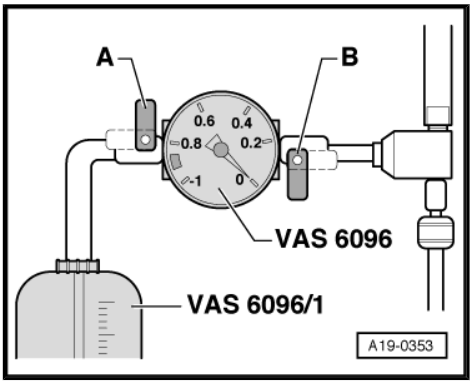

The suction jet pump generates a partial vacuum in the cooling system.

- The needle on the gauge should move into the green zone.

– Also briefly open valve -A- (turn lever in direction of flow) so that hose on reservoir - VAS 6096/1- can fill with coolant.

– Close valve -A- again.

– Leave valve -B- open for another 2 minutes.

- The suction jet pump will continue generating a vacuum in the cooling system.
- The needle on the gauge should remain in the green zone.

– Close valve -B-.

- The needle on the gauge should stop in the green zone. The vacuum level in the cooling system is then sufficient for subsequent filling.

If the needle does not reach the green zone, repeat the process.

If the vacuum level drops, there is a leak in the cooling system.

– Detach compressed air hose.

– Open valve -A-.

The partial vacuum in the cooling system causes the coolant to be drawn up out of the reservoir - VAS 6096/1- ; the cooling system is then filled.

– Detach cooling system charge unit - VAS 6096- from coolant expansion tank.

– Fit pipe - V.A.G 1274/10- onto adapter - V.A.G 1274/8- .

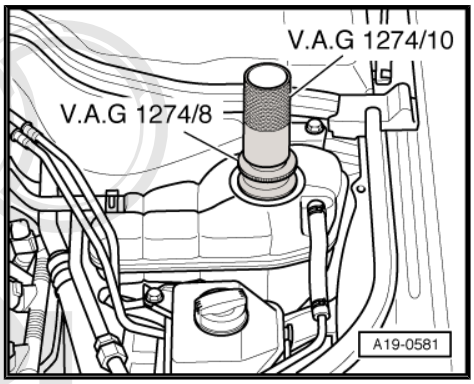

– Pull off rubber seal -1- on plenum chamber cover.

– Detach plenum chamber covers -2- and -3-.

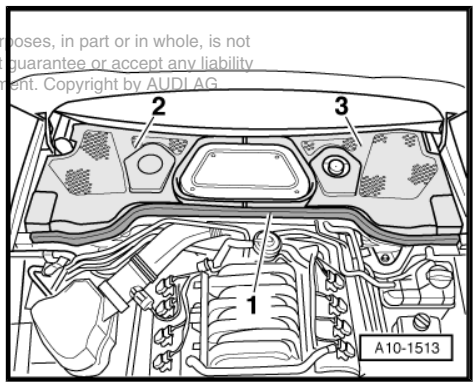

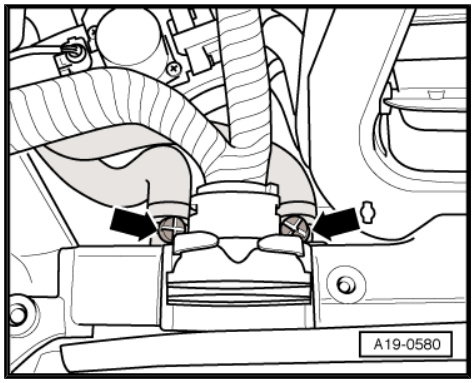

- Open bleeder screws -arrows-.
- Fill up with coolant until it flows out at bleeder holes in coolant hoses.
- Close bleeder screws.
- On vehicles with auxiliary heater, switch heater on (for about 30 seconds) and then off again.
- Close filler cap on expansion tank.
- Start engine.
- Set temperature to “HI” in all zones.
- Switch off air conditioner compressor; to do so, press ECON or AC button (depending on version).

Note

- ECON *button: LED must light up.*
- AC *button: LED must not light up.*

- Run engine for 3 minutes at 2000 rpm.
- Allow engine to run at idling speed until both large coolant hoses at radiator become warm.
- Run engine for 1 minute at 2000 rpm.
- Switch off ignition and allow engine to cool down.
- Install noise insulation ⇒ Rep. gr. 66 .

- Check coolant level.

• The coolant level must be at the MAX marking when the engine is cold.
• The coolant level can be above the MAX marking when the engine is warm.

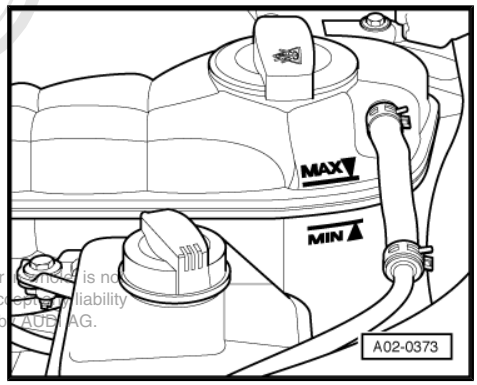

1.4 Thermostat, coolant pump and connection - exploded view

1 - 9 Nm

2 - 20 Nm

3 - Poly V-belt pulley for coolant pump

4 - Coolant pump
- ❑ With seal
- ❑ Removing and installing ⇒ page 229

5 - 9 Nm

6 - Connection
- ❑ For coolant hose

7 - Gasket
- ❑ Renew

8 - Gasket
- ❑ Different versions available ⇒ Electronic parts catalogue
- ❑ Renew

9 - Thermostat
- ❑ Removing and installing ⇒ page 231
- ❑ Checking ⇒ page 232

10 - 9 Nm

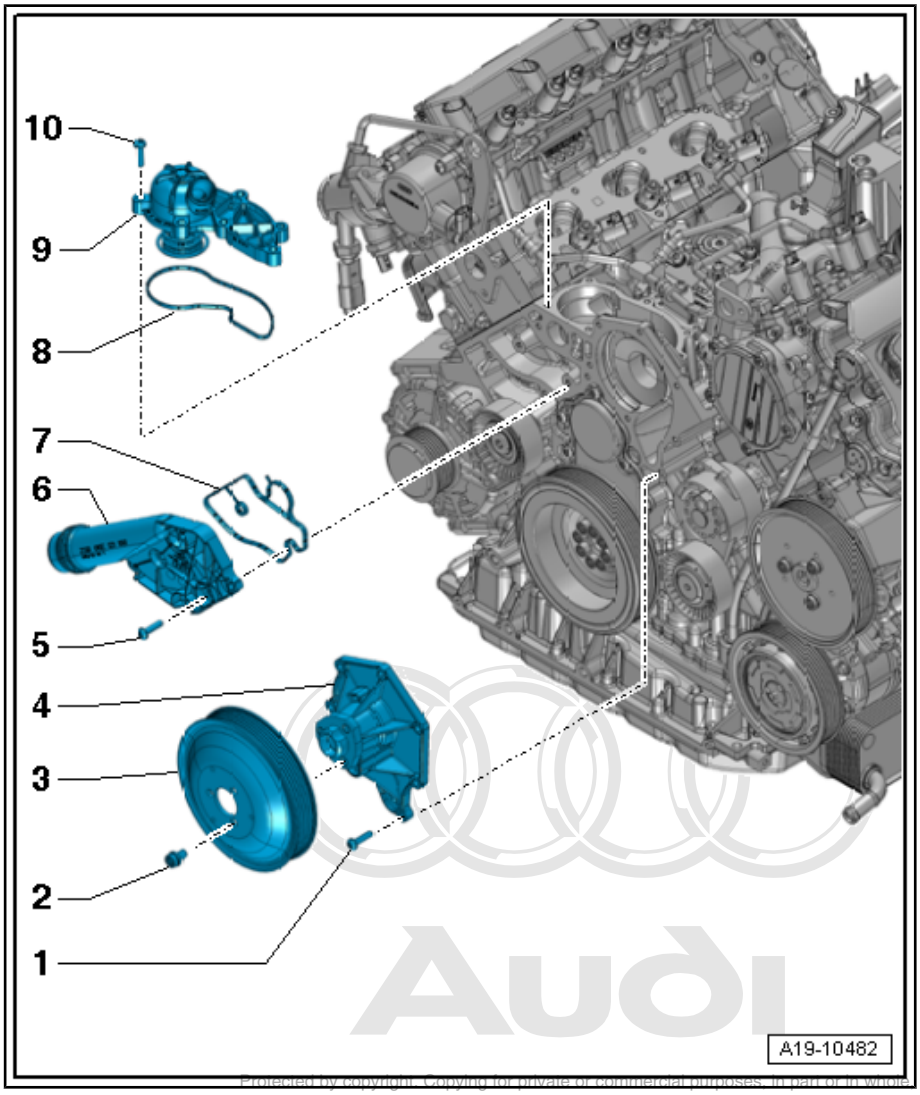

1.5 Removing and installing coolant pump

Special tools and workshop equipment required

- ♦ Pin wrench - 3212-

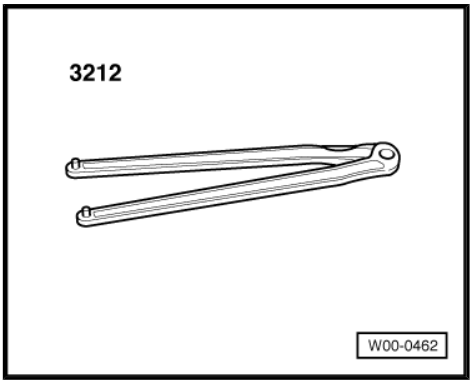

Removing

– Drain off coolant ⇒ page 222 .

– Pull off engine cover panel (front) -arrows-.

– Remove engine compartment seal from lock carrier and wing panel flanges.

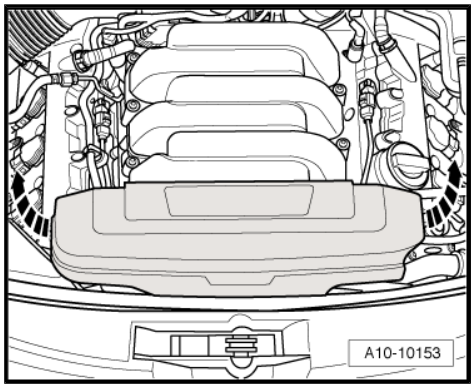

Note

Before removing, mark direction of rotation of poly V-belt with chalk or felt-tip pen. If the belt runs in the opposite direction when it is refitted, this can cause breakage.

– Turn the tensioner in the direction of the -arrow- to slacken the poly V-belt.

– Remove poly V-belt from coolant pump.

– Release pressure from the tensioner.

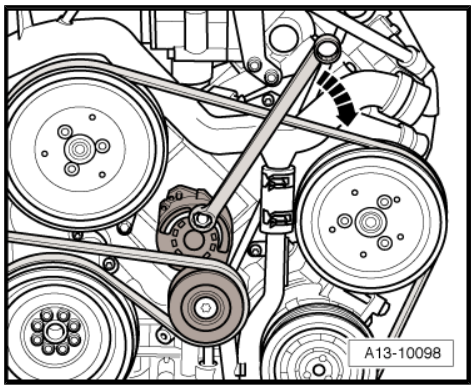

– Slacken bolts for coolant pump pulley (counterhold with pin wrench - 3212-).

– Remove bolts and take off coolant pump pulley.

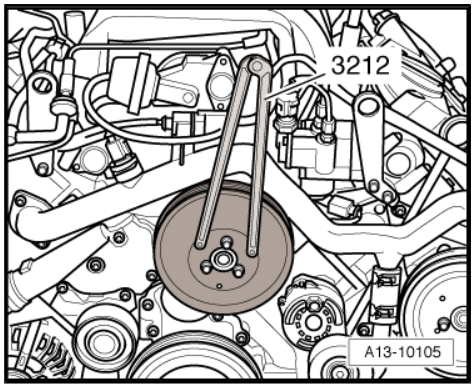

– Prise off cap.

– Unscrew bolt -arrow- and detach idler roller.

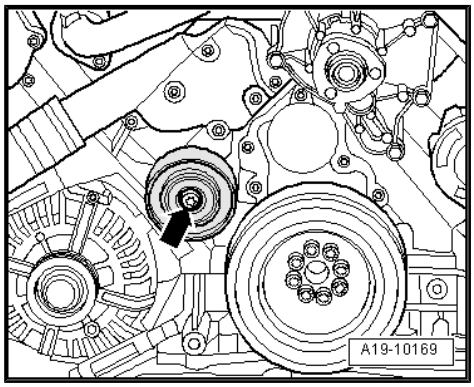

– Unscrew bolts -arrows- for coolant pump and take out coolant pump from engine compartment by moving towards right.

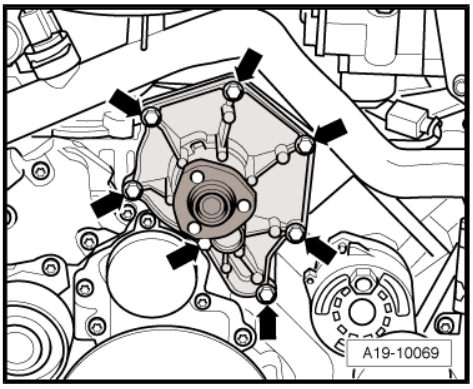

Installing

Installation is carried out in the reverse order; note the following:

– Clean sealing surfaces; they must be free of oil and grease.

– Install poly V-belt ⇒ page 87 .

Note

Do not reuse coolant.

– Fill cooling system ⇒ page 224 .

Tightening torques

Component	Nm
Coolant pump to cylinder block	9
Poly V-belt pulley to coolant pump	20
Idler roller to cylinder block	40

1.6 Removing and installing thermostat

Removing

– Drain off coolant ⇒ page 222 .

– Remove intake manifold (top section) ⇒ page 267 .

– Remove coolant pipe (front) ⇒ page 234 .

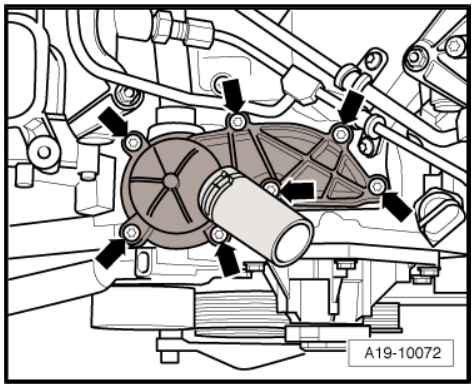

Note

Place a cloth underneath to catch any escaping coolant.

– Remove bolts -arrows-.
– Detach thermostat with hose connection.

Installing

Installation is carried out in the reverse order; note the following:

Note

Renew seals and gaskets.

– Install coolant pipe (front) ⇒ page 234 .
– Install intake manifold (top section) ⇒ page 267 .

Note

Do not reuse coolant.

– Fill cooling system ⇒ page 224 .

Tightening torque

Component	Nm
Coolant thermostat with hose connection to cylinder block	9

1.7 Checking thermostat

– Heat removed thermostat in water bath.

Starts to open	Fully open	Opening travel
approx. 87 °C	approx. 102 °C [1]	at least 8 mm
• [1] Cannot be tested.		

1.8 Coolant pipes - exploded view

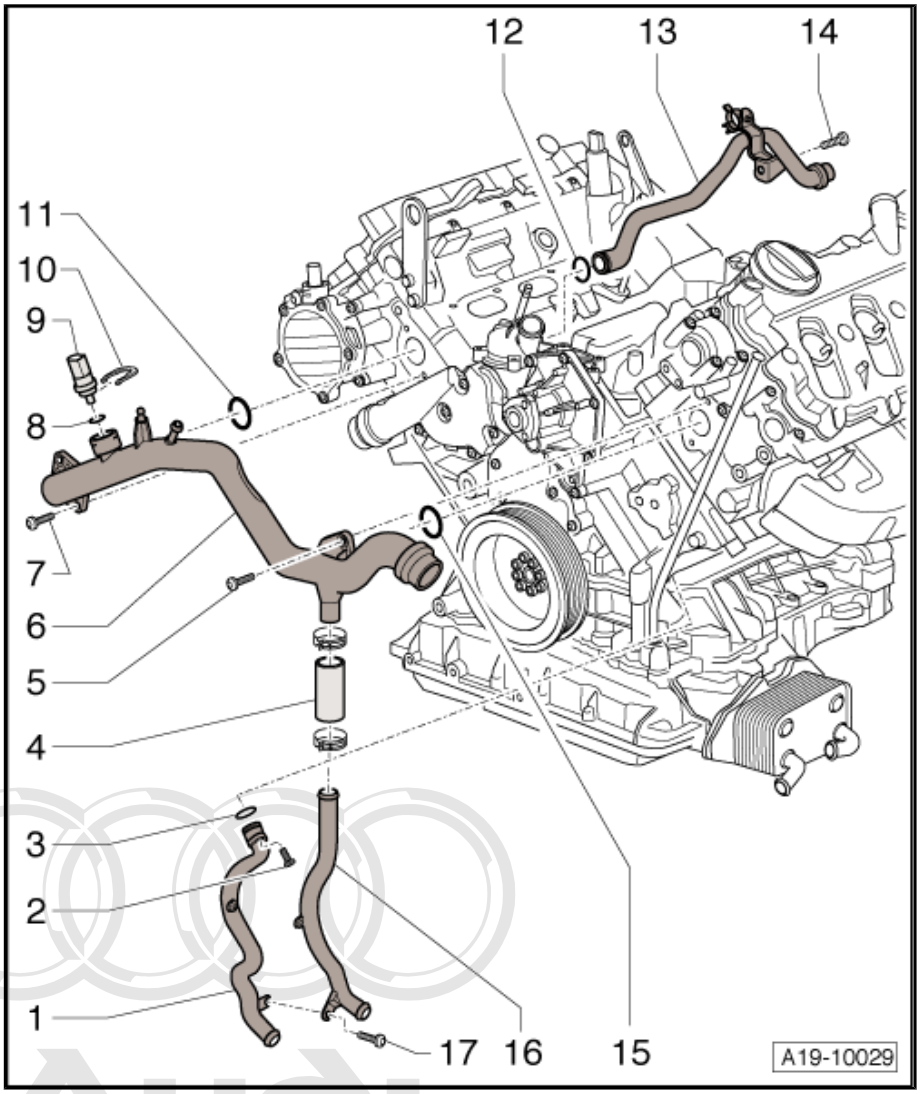

1 - Coolant pipe (left-side)
- ❑ Remove and install together with ⇒ Item 16 (page 233) ⇒ page 237

2 - 9 Nm

3 - O-ring
- ❑ Renew

4 - Connecting hose

5 - 9 Nm

6 - Coolant pipe (front)
- ❑ Removing and installing ⇒ page 234

7 - 9 Nm

8 - O-ring
- ❑ Renew

9 - Coolant temperature sender - G62-
- ❑ Removing and installing ⇒ page 233

10 - Retaining clip

11 - Seal
- ❑ Renew

12 - O-ring
- ❑ Renew

13 - Coolant pipe (top)
- ❑ Removing and installing ⇒ page 240

14 - 9 Nm

15 - Seal
- ❑ Renew

16 - Coolant pipe (left-side)
- ❑ Remove and install together with ⇒ Item 1 (page 233) ⇒ page 237

17 - 9 Nm

1.9 Removing and installing coolant temperature sender - G62-

Removing

– Drain off coolant ⇒ page 222 .

– Pull off engine cover panel (front) -arrows-.

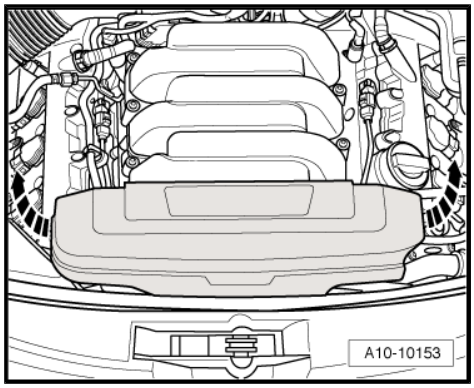

– Unplug electrical connector -2- at coolant temperature sender - G62- .
– Pull off retaining clip -1- and detach coolant temperature sender - G62- .

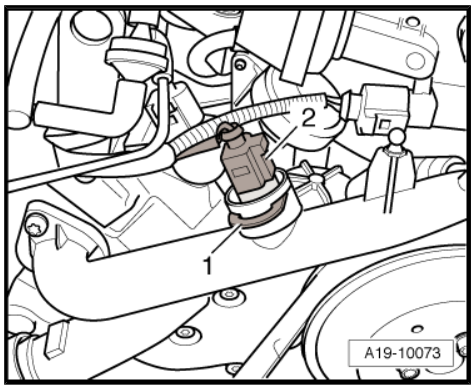

Installing

Installation is carried out in the reverse order; note the following:

Note

- *Renew O-ring.*
- *Do not reuse coolant.*

– Fill cooling system ⇒ page 224 .

1.10 Removing and installing coolant pipe (front)

Special tools and workshop equipment required

- Pin wrench - 3212-

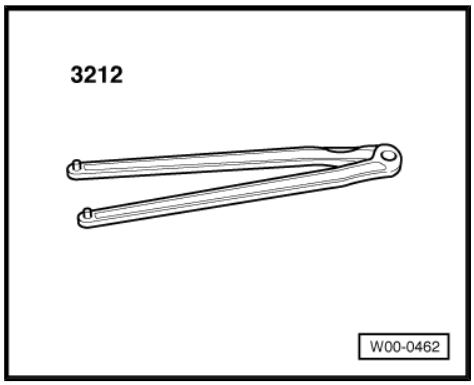

- Hose clip pliers - VAS 6362-

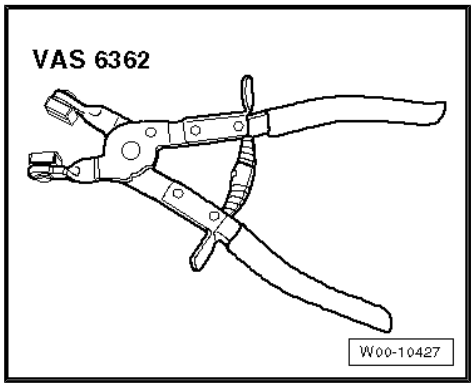

Removing

– Pull off engine cover panel (front) -arrows-.

– Drain off coolant ⇒ page 222 .

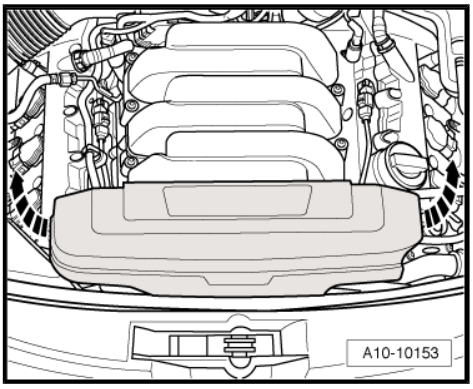

– Unscrew bolts -arrows- and remove lifting eye.

– Remove engine compartment seal from lock carrier and wing panel flanges.

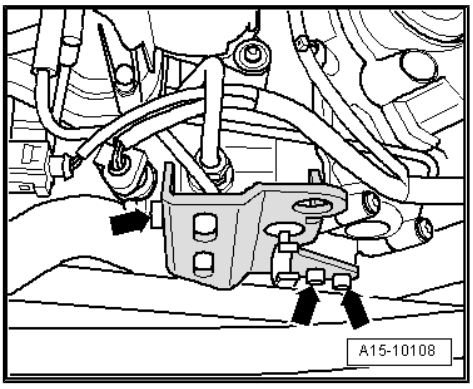

Note

Before removing, mark direction of rotation of poly V-belt with chalk or felt-tip pen. If the belt runs in the opposite direction when it is refitted, this can cause breakage.

– Turn the tensioner in the direction of the -arrow- to slacken the poly V-belt.

– Remove poly V-belt from coolant pump.

– Release pressure from the tensioner.

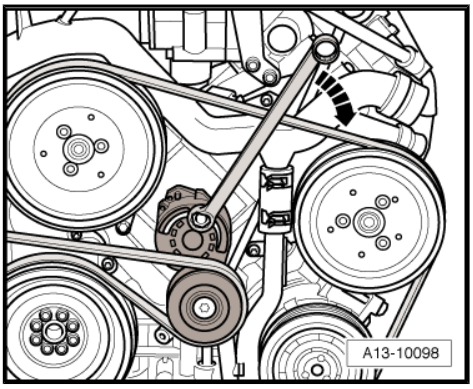

– Slacken bolts for coolant pump pulley (counterhold with pin wrench - 3212-).

– Remove bolts and take off coolant pump pulley.

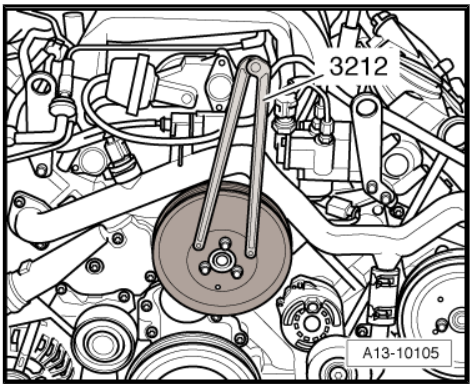

– Unplug electrical connector at fuel pressure sender for low pressure - G410- -item 2-.

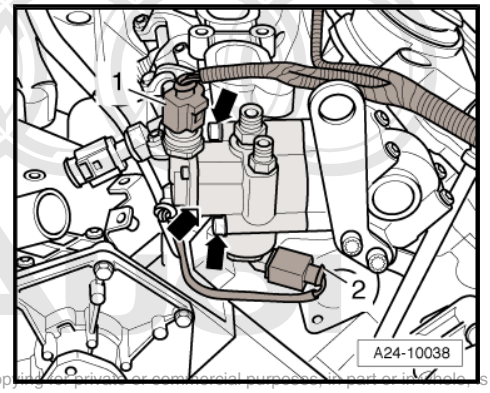

Note

Ignore items marked -1- and -arrows-.

– Remove bolts -arrow- at coolant pipe for alternator.

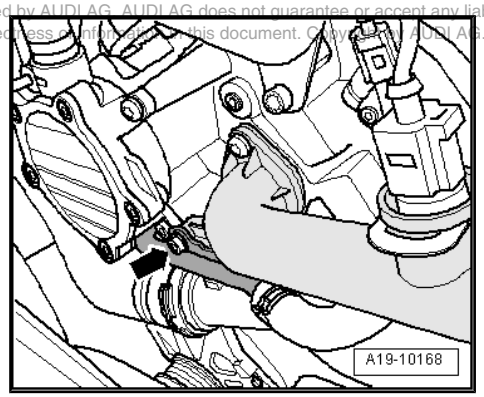

– Unplug electrical connector -3-.
– Detach coolant hoses -arrows- from coolant pipe (front).

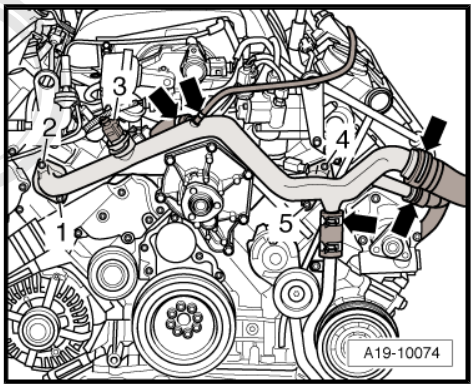

Note

Disregard -arrow- on bottom right of illustration.

– Unscrew bolts -1-, -2-, -4- and -5- and remove coolant pipe (front).

Installing

Installation is carried out in the reverse order; note the following:

Note

- *Renew seals and O-rings.*
- *Secure all hose connections with the correct type of hose clips (same as original equipment) ⇒ Electronic parts catalogue .*

– Before installing, clean and smoothen sealing surface for O-ring.
– Lubricate new O-ring with coolant and slide onto coolant pipe.
– Install poly V-belt ⇒ page 87 .
– Fill cooling system ⇒ page 224 .

Tightening torques

Component	Nm
Coolant pipe (front) to engine	9
Coolant pipe for alternator to coolant pipe (front)	9
Poly V-belt pulley to coolant pump	20

1.11 Removing and installing coolant pipes (left-side)

Special tools and workshop equipment required

- Drip tray for workshop hoist - VAS 6208-

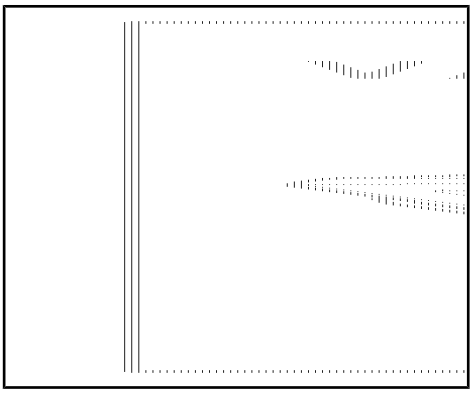

♦ Hose clip pliers - VAS 6362-

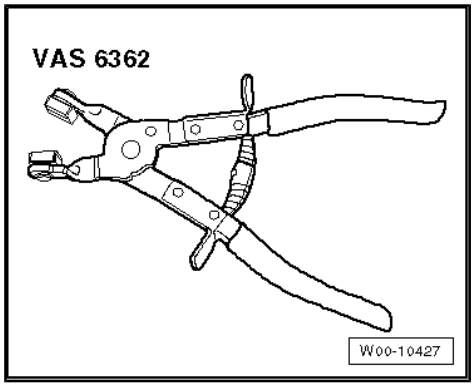

Removing

– Pull off engine cover panel (front) -arrows-.

– Remove engine compartment seal from lock carrier and wing panel flanges.

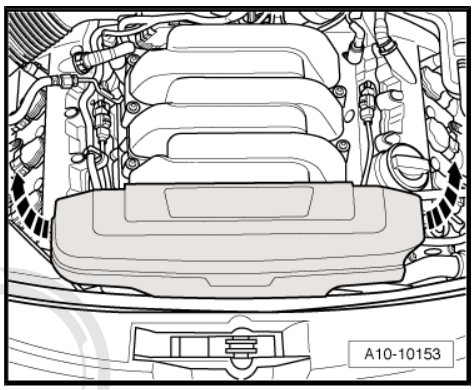

Note

Before removing, mark direction of rotation of poly V-belt with chalk or felt-tip pen. If the belt runs in the opposite direction when it is refitted, this can cause breakage.

– Turn the tensioner in the direction of the -arrow- to slacken the poly V-belt.

– Remove poly V-belt from coolant pump.

– Release pressure from the tensioner.

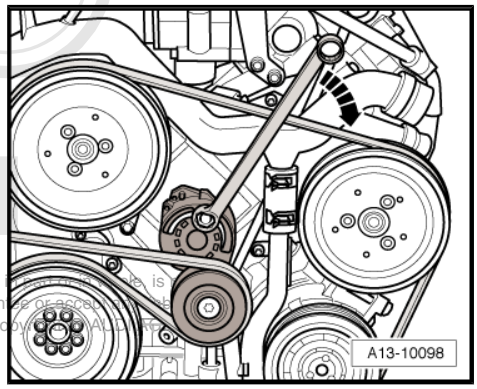

WARNING

Hot steam or hot coolant can escape when coolant expansion tank is opened; cover filler cap with cloth and open carefully.

– Open filler cap on coolant expansion tank.

– If fitted, remove bolts -arrows- securing exhaust pipe for auxiliary/additional heater to noise insulation.

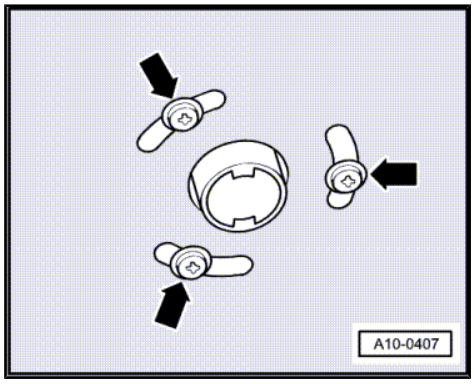

– Release quick-release fasteners -1- and -2- and take off noise insulation.

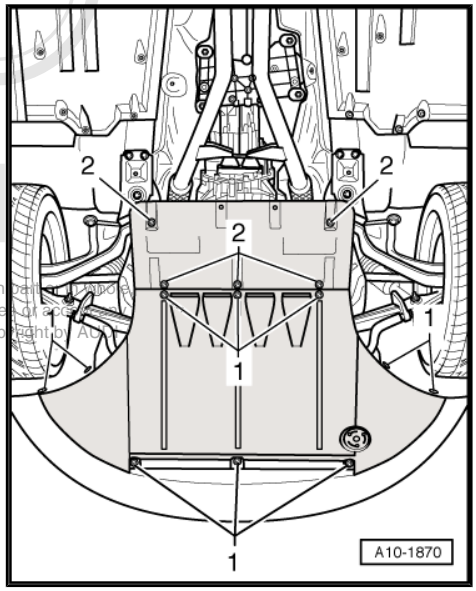

– Place drip tray for workshop hoist - VAS 6208- under engine.
– Disconnect coolant hose -arrow- at engine oil cooler and drain off coolant.
– Then remove coolant hose.

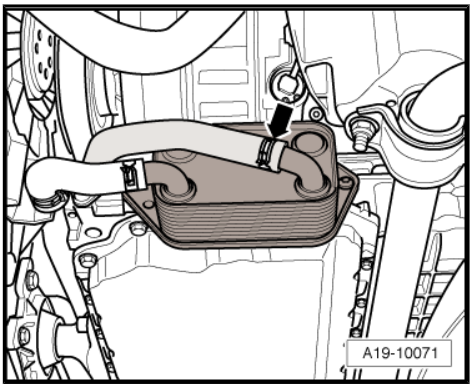

– Unplug electrical connector -1- for magnetic clutch on air conditioner compressor.

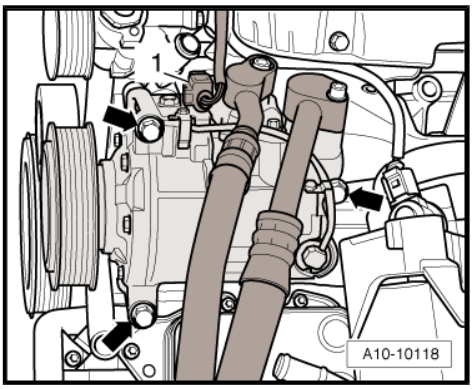

WARNING

The air conditioner refrigerant circuit must not be opened.

– Unscrew air conditioner compressor from bracket -arrows-.

Note

To prevent damage to the condenser and refrigerant pipes/hoses, ensure that the pipes and hoses are not stretched, kinked or bent.

– Tie up air conditioner compressor with lines attached to left-side of vehicle.

– Remove bolts -arrows- and detach bracket for AC compressor.

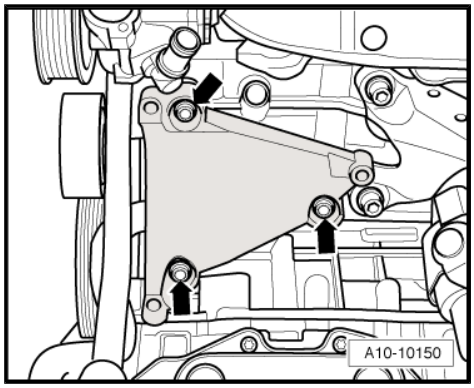

– Remove bolts -arrows-.
– Disconnect coolant pipes from coolant hoses -1- and -2-.

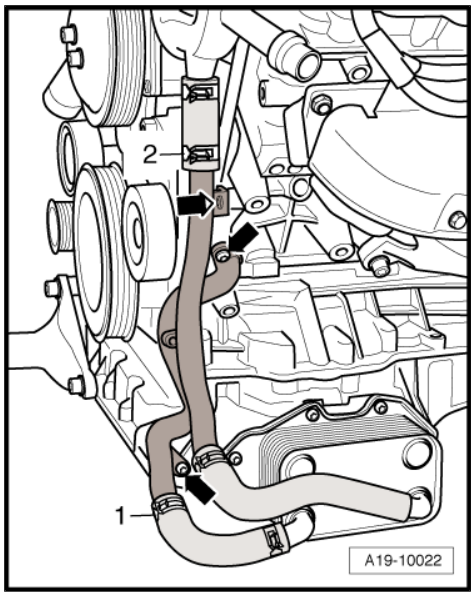

Note

Shown in illustration with power steering pump removed.

Installing

Installation is carried out in the reverse order; note the following:

Note

- *Renew O-rings.*
- *Secure all hose connections with the correct type of hose clips (same as original equipment) ⇒ Electronic parts catalogue .*

– Before installing, clean and smoothen sealing surface for O-ring.
– Lubricate new O-ring with coolant and slide onto coolant pipe.
– Install air conditioner compressor ⇒ Rep. gr. 87 .
– Install poly V-belt ⇒ page 87 .

Note

Do not reuse coolant.

– Fill cooling system ⇒ page 224 .

Tightening torque

Component	Nm
Coolant pipes to engine	9

1.12 Removing and installing coolant pipe (top)

Special tools and workshop equipment required

- Socket, 14 mm - 3150-
- Torque wrench - V.A.G 1331-
- Ratchet - V.A.G 1331/1-
- Tool inserts - V.A.G 1331/2-
- Socket insert AF 14, flared ring spanner - V.A.G 1331/8-
- Socket - T40055-

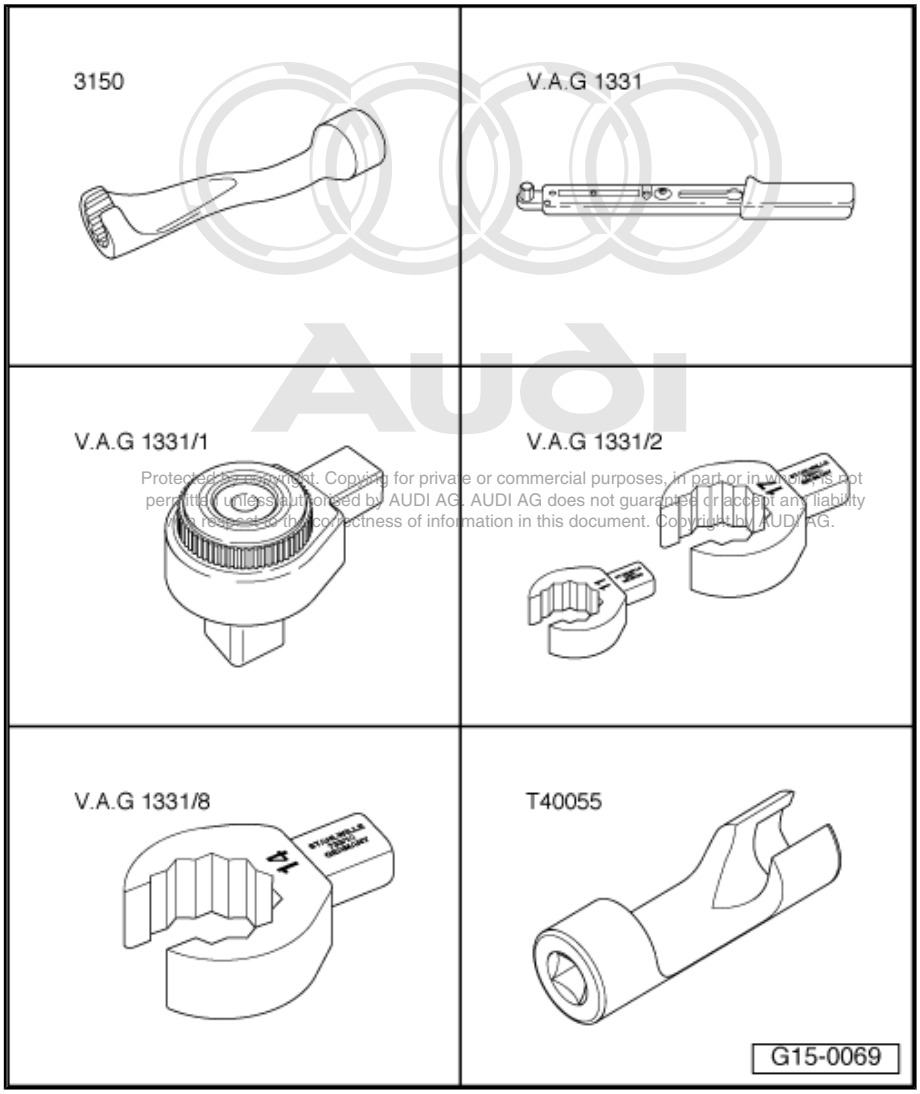

Removing

Note

All cable ties which are released or cut open when removing must be fitted in the same position when installing.

– Drain off coolant ⇒ page 222 .

– Remove intake manifold (top section) ⇒ page 267 .

WARNING

The fuel system operates under high pressure. The pressure in the high-pressure part of the injection system must be reduced to a residual pressure prior to opening the system ⇒ page 261 . A clean cloth must then be wrapped around the connection and the residual pressure dissipated by carefully loosening the connection.

Rest-of-world vehicles:

– Disconnect crankcase breather hoses -arrows- from cylinder head covers.

– Move crankcase breather hoses clear.

– Remove bolt -1- and take out hose connection with crankcase breather hoses.

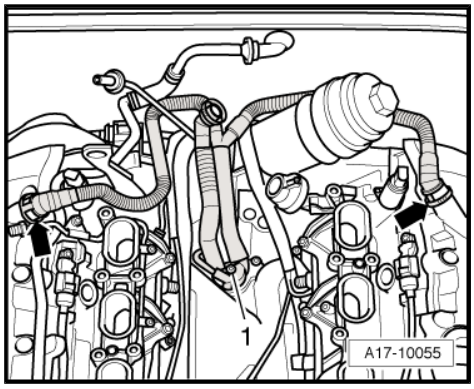

USA models:

> **Caution**
>
> *Do not disconnect crankcase breather hose on USA models.*

– Detach cylinder head cover (left-side) and move clear to one side (crankcase breather hose remains connected) ⇒ page 161 .

All vehicles:

– Remove high-pressure pipe by unscrewing bolts and union nuts -1 … 6-.

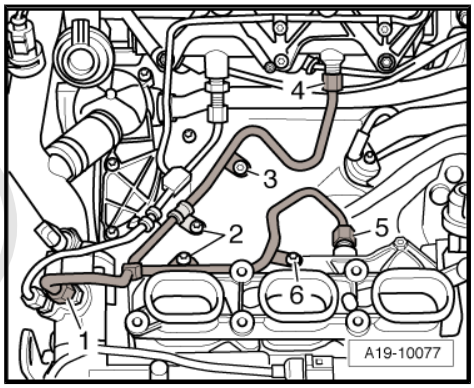

– Lay a cloth under coolant pipe to catch escaping coolant.

– Detach coolant hose -3- from coolant pipe.

– Unscrew bolts -1- and -2- and pull coolant pipe out of cylinder block towards the rear -arrow-.

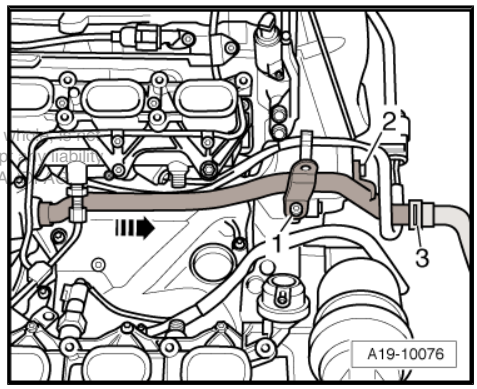

Installing

Installation is carried out in the reverse order; note the following:

> **Note**
>
> ♦ *Renew O-ring.*
>
> ♦ *Fit all cable ties in the original positions when installing.*

– Before installing, clean and smoothen sealing surface for O-ring.

– Lubricate new O-ring with coolant and slide onto coolant pipe.

– First hand-tighten union nuts -1-, -4- and -5- for high-pressure pipes, then hand-tighten pipe mountings -2-, -3- and -6-.
– Ensure that high-pressure pipes are not under tension.

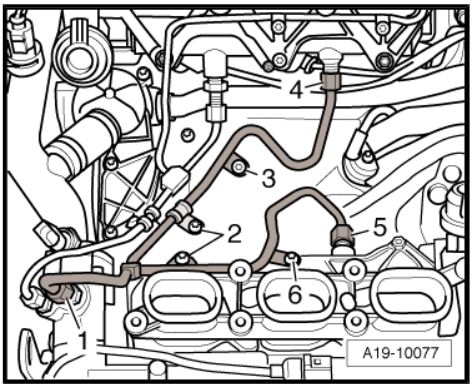

– To tighten union of high-pressure pipe (14 mm) at fuel rail, use torque wrench - V.A.G 1331- with socket insert AF 14, flared ring spanner - V.A.G 1331/8- .

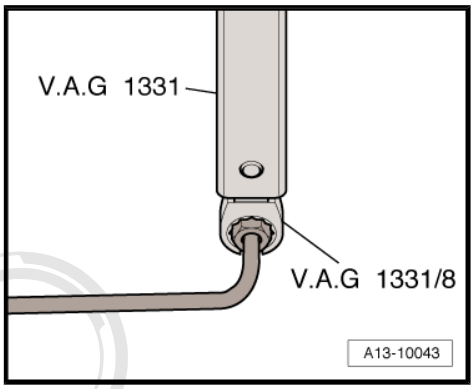

– To tighten unions of high-pressure pipe (17 mm) to fuel rail, use torque wrench - V.A.G 1331- with open ring spanner insert -V.A.G 1331/2- .

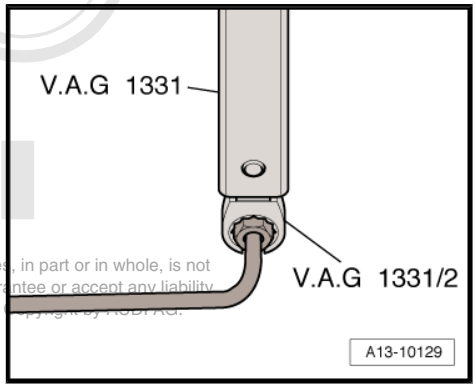

– To tighten union of high-pressure pipe (17 mm) at high-pressure pump, use torque wrench - V.A.G 1331- with ratchet - V.A.G 1331/1- and socket - T40055- .
– Install intake manifold (top section) ⇒ page 267 .
– Install high-pressure pipes ⇒ page 269 .

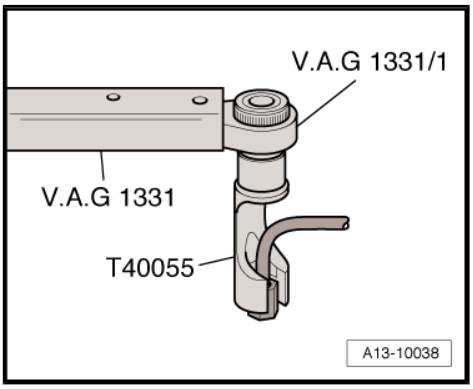

Note

Do not reuse coolant.

– Fill cooling system ⇒ page 224 .

Tightening torques

Component	Nm
Coolant pipe to engine	9
Hose connection for crankcase breather hoses to cover	6

1.13 Radiator and radiator fans - exploded view

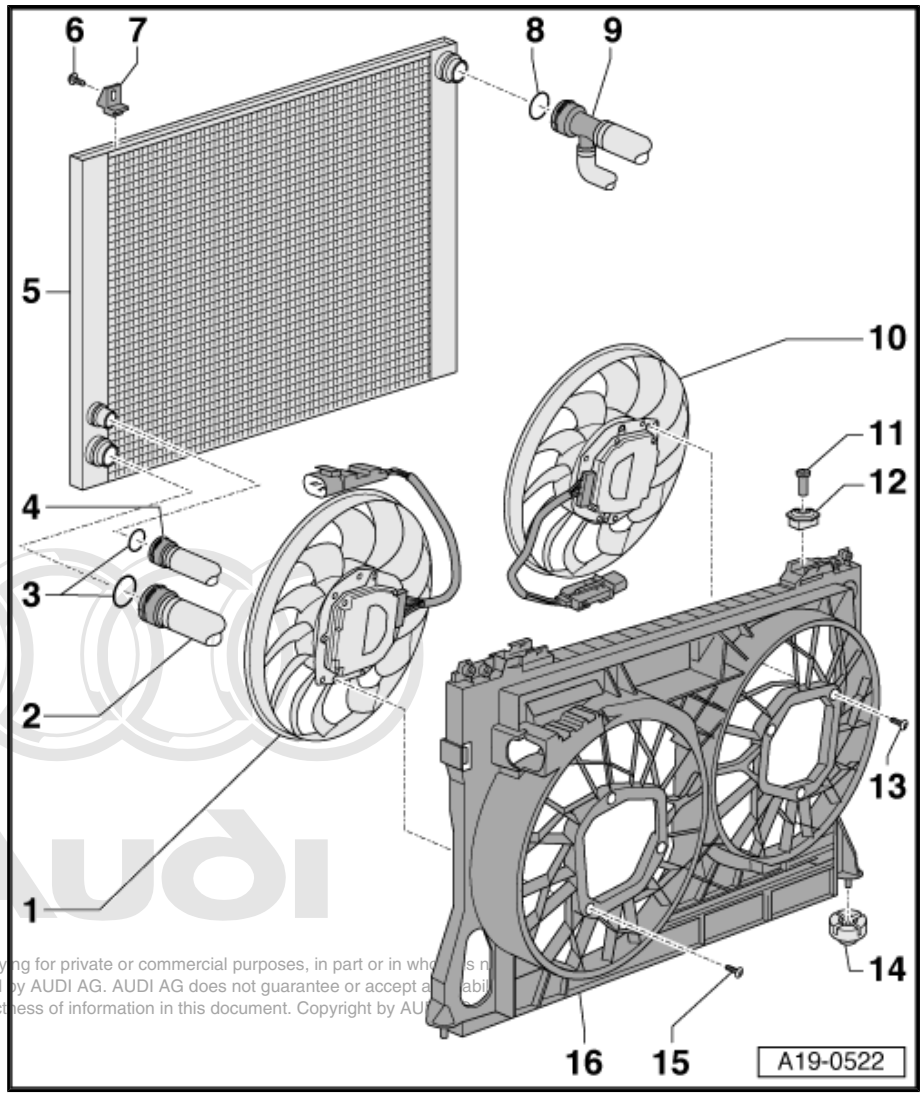

1 - Radiator fan - V7-
- ❑ With radiator fan control unit - J293-
- ❑ Removing and installing ⇒ page 249

2 - Coolant hose
- ❑ To detach, release retaining clip

3 - O-ring
- ❑ Renew

4 - Not fitted

5 - Radiator
- ❑ Removing and installing ⇒ page 244
- ❑ If renewed, change coolant in entire system

6 - 6 Nm

7 - Mounting for radiator

8 - O-ring
- ❑ Renew

9 - Coolant hose
- ❑ To detach, release retaining clip

10 - Radiator fan 2 - V177-
- ❑ With radiator fan control unit 2 - J671-
- ❑ Removing and installing ⇒ page 249

11 - Retaining pin

12 - Rubber buffer
- ❑ Use screwdriver to release and pull off

13 - 10 Nm

14 - Rubber mounting

15 - 10 Nm

16 - Radiator cowl
- ❑ Removing and installing ⇒ page 248

1.14 Removing and installing radiator

Special tools and workshop equipment required

♦ Drip tray for workshop hoist - VAS 6208-

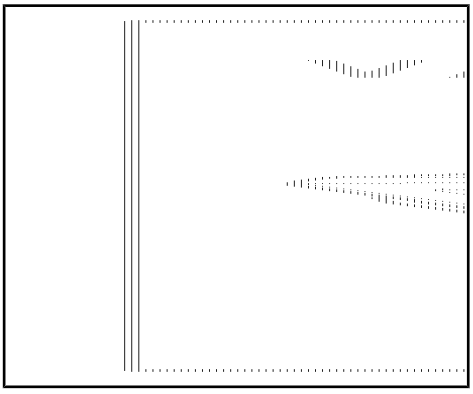

♦ Hose clip pliers - VAS 6362-

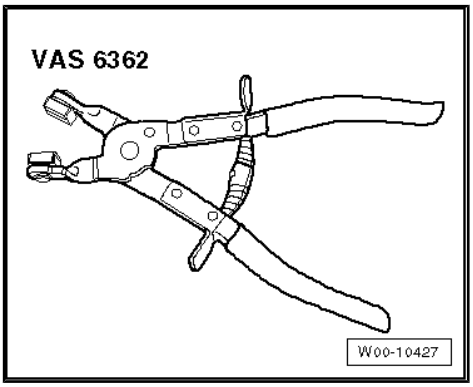

Removing

WARNING

Hot steam or hot coolant can escape when coolant expansion tank is opened; cover filler cap with cloth and open carefully.

– Open filler cap on coolant expansion tank.
– Remove both front wheels.

Note

Secure brake discs with wheel bolts.

– If fitted, remove bolts -arrows- securing exhaust pipe for auxiliary/additional heater to noise insulation.

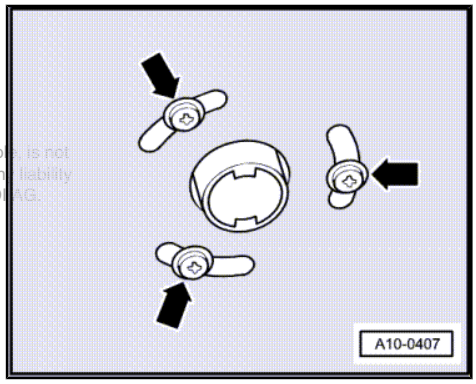

– Open quick-release fasteners -1- and remove noise insulation (front).

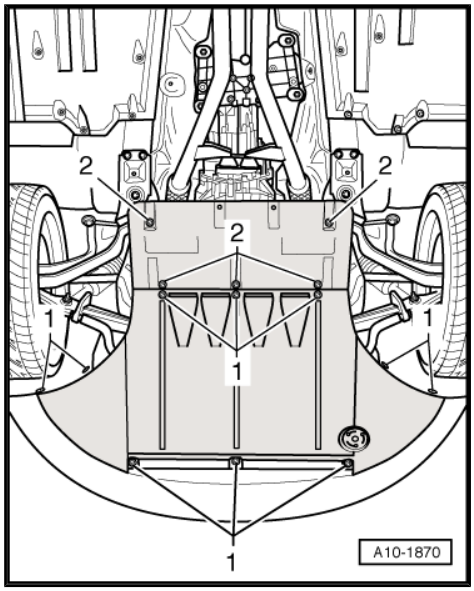

– Place drip tray for workshop hoist - VAS 6208- under engine.

– Disconnect coolant hose -arrow- at thermostat before ATF cooler and drain off coolant.

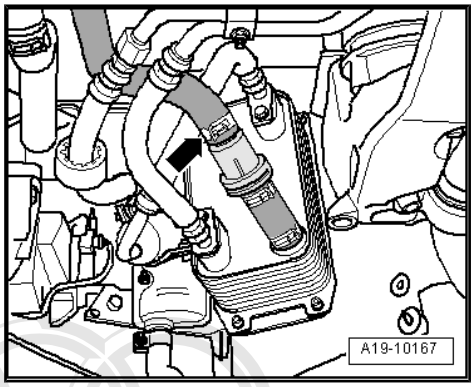

– Disconnect coolant hose -arrow- at engine oil cooler and drain off remaining coolant.

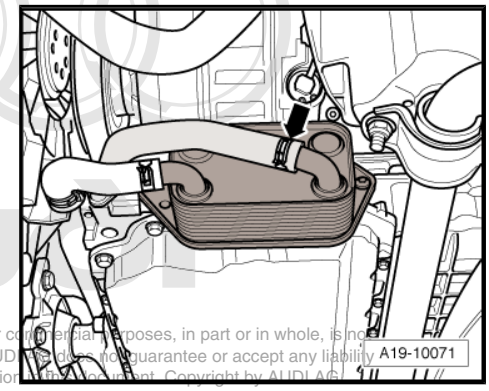

– Detach large coolant hose -arrow- at bottom left of radiator.

– Detach small coolant hose at bottom of radiator.

– Remove front sections of front wheel housing liners (left and right) ⇒ Rep. gr. 66 .

– Remove bumper cover (front) ⇒ Rep. gr. 63 .

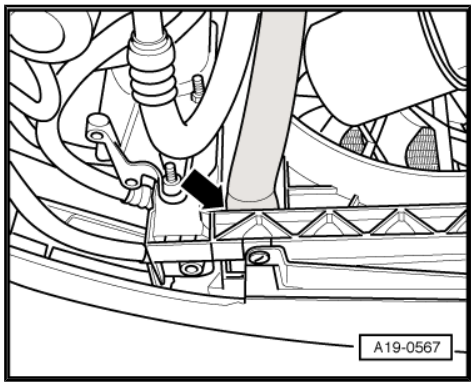

– Remove upper coolant hose -2- from radiator by pulling off retaining clip.

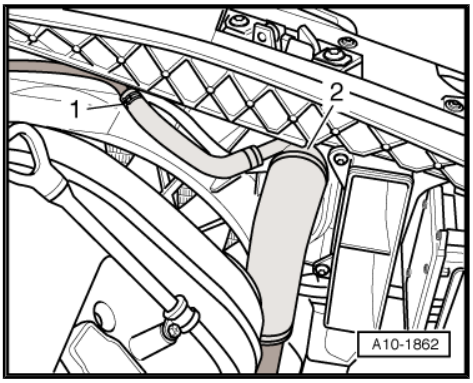

Note

Disregard -item 1-.

– Detach ambient temperature sensor - G17- -item 4- from bracket.
– Unplug electrical connectors -1 ... 3-.
– Move electrical wiring clear.

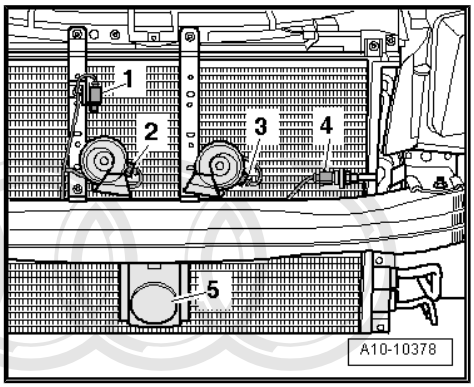

Note

Disregard item -5-.

– Remove bolts -arrows-.
– Remove bumper together with struts.

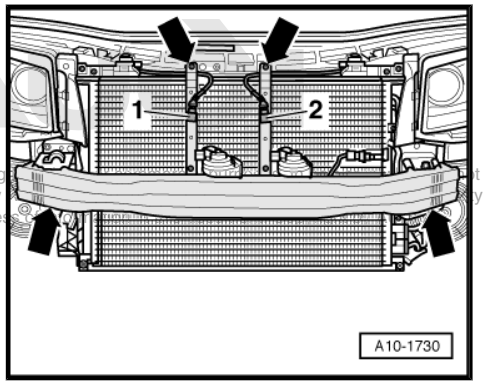

Note

Disregard -items 1 and 2-.

WARNING

The air conditioner refrigerant circuit must not be opened.

Note

To prevent damage to the air conditioner compressor and refrigerant pipes/hoses, ensure that the pipes and hoses are not stretched, kinked or bent.

– Remove bolts -arrows-.
– Swivel down condenser together with cooler for power-assisted steering and secure by tying to engine.

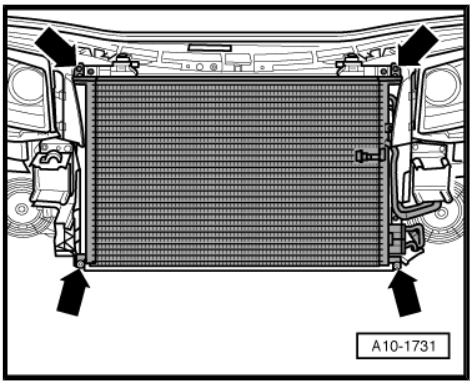

– Compress retainer catches -arrows- and detach air duct from lock carrier (front right).

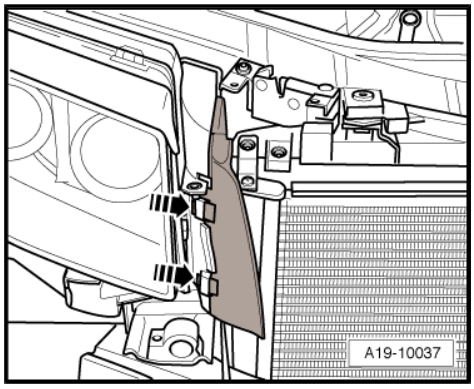

– Remove the two brackets for radiator -arrows-.

– Tilt top of radiator forwards slightly and lift out of lock carrier.

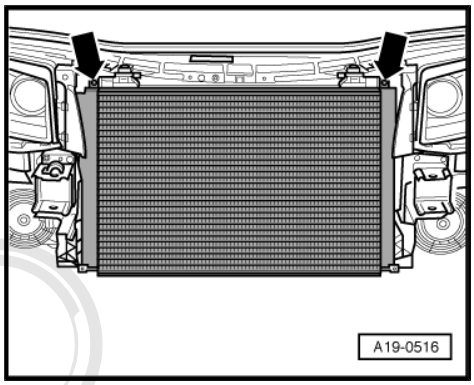

Installing

Installation is carried out in the reverse order; note the following:

Note

- *If there are slight impressions on the fins, refer to ⇒ page 7 .*
- *Secure all hose connections with the correct type of hose clips (same as original equipment) ⇒ Electronic parts catalogue .*

– Install front bumper ⇒ Rep. gr. 63 .

– Install front section of front wheel housing liners (left and right) ⇒ Rep. gr. 66 .

Note

Do not reuse coolant.

– Fill cooling system ⇒ page 224 .

Tightening torques

Component	Nm
Bracket for radiator to lock carrier	6
Condenser to lock carrier	6
Struts to lock carrier	9

1.15 Removing and installing radiator cowl

Removing

– Drain off coolant ⇒ page 222 .

– Remove radiator ⇒ page 244 .

– Unplug electrical connector -arrow- for radiator fan (right-side).

– Move wires clear at rear of lock carrier.

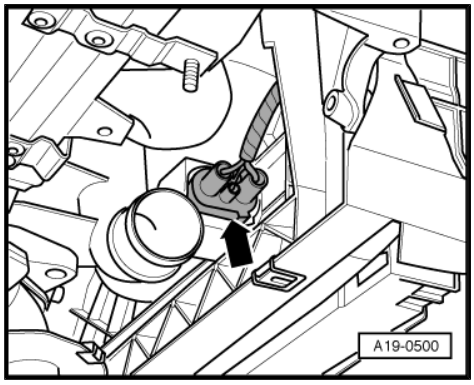

– Release both retaining pins for radiator cowl and pull out upwards -arrows-.

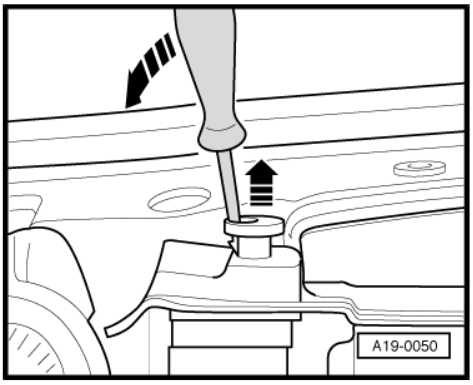

– Tilt top edge of radiator cowl forwards.
– Reach behind radiator cowl and unplug electrical connector -arrow- for radiator fan.
– Remove radiator cowl.

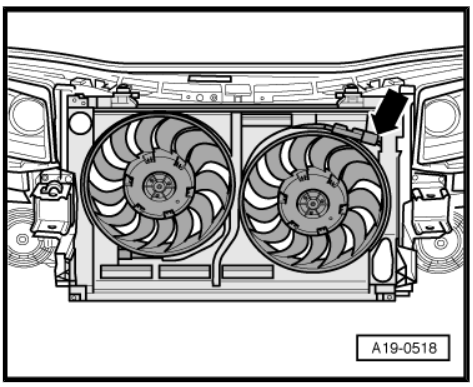

Installing

Installation is carried out in the reverse order; note the following:

– Install radiator ⇒ page 244 .

Note

Do not reuse coolant.

– Fill cooling system ⇒ page 224 .

1.16 Removing and installing radiator fans

Removing

– Drain off coolant ⇒ page 222 .
– Remove radiator ⇒ page 244 .
– Remove radiator cowl ⇒ page 248 .
– Move wiring clear.

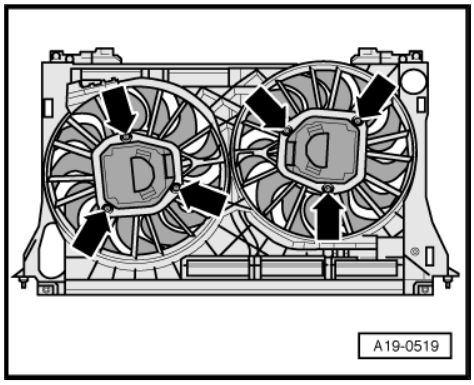

– Remove bolts -arrows-.
– Unclip electrical connectors and lay wiring aside.
– Remove radiator fan.

Installing

Installation is carried out in the reverse order; note the following:

– Install radiator cowl ⇒ page 248 .
– Install radiator ⇒ page 244 .

Note

Do not reuse coolant.

– Fill cooling system ⇒ page 224 .

Tightening torque

Component	Nm
Radiator fan to radiator cowl	10 [1]
• [1] Renew bolt.	

24 – Mixture preparation - injection

1 Servicing Simos injection system

1.1 Technical data

Engine code	3.2 ltr. / 4V / 188 kW engine	3.2 ltr. / 4V / 191 kW engine
Idling speed[1)]	650 ... 750 rpm	
Fuel pressure after high-pressure pump	approx. 35 bar	
Fuel pressure before high-pressure pump	approx. 6 bar	
• [1)] Not adjustable		

1.2 Overview of fitting locations

Engine compartment (right-side)

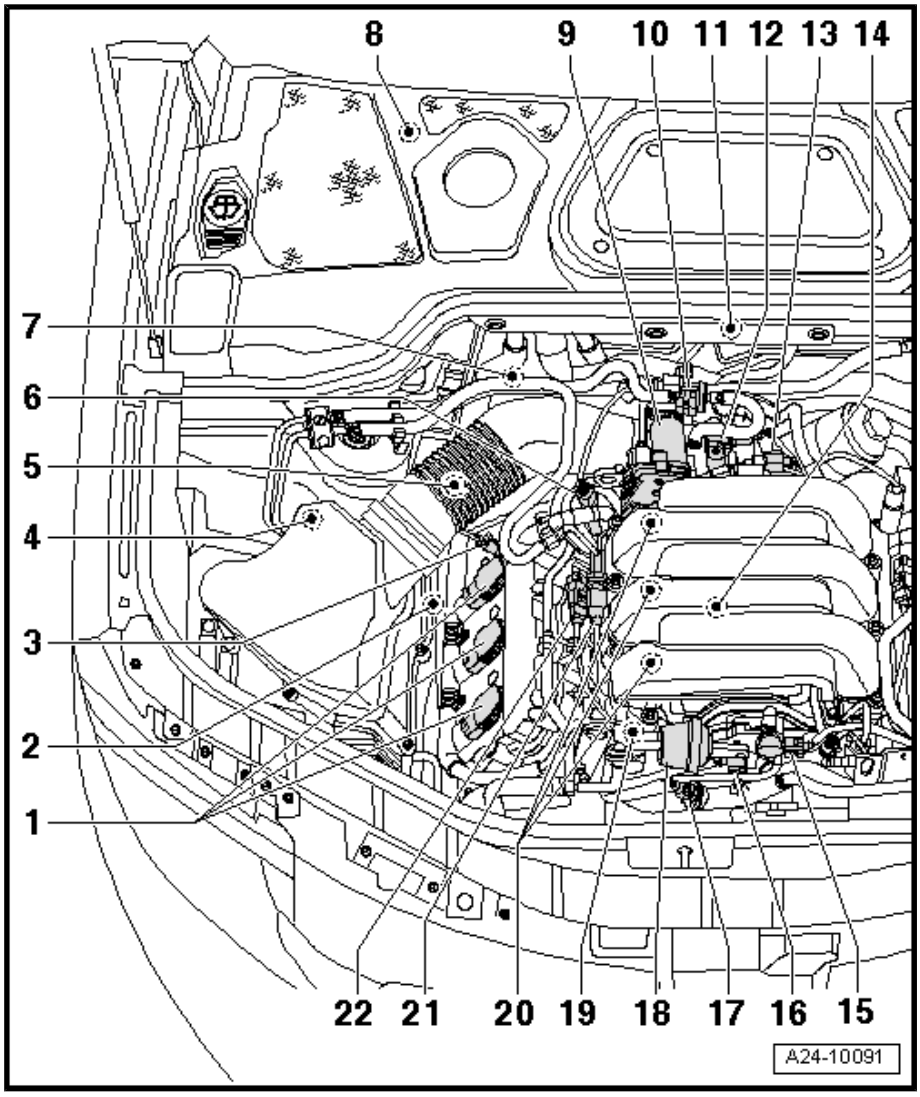

1 - Ignition coils for cylinder bank 1

- ❑ Ignition coil 1 with output stage - N70-
- ❑ Ignition coil 2 with output stage - N127-
- ❑ Ignition coil 3 with output stage - N291-
- ❑ Removing and installing ⇒ page 320

2 - Hall sender 3 - G300-

- ❑ Fitting location ⇒ page 257

3 - Camshaft control valve 1 - N205-

- ❑ Fitting location ⇒ page 257

4 - Variable intake manifold change-over valve - N335-

- ❑ Fitting location ⇒ page 259

5 - Lambda probe - G39-

- ❑ Fitting location ⇒ page 256
- ❑ Fitting location of connector ⇒ page 256
- ❑ Removing and installing ⇒ page 290

6 - Exhaust camshaft control valve 1 - N318-

- ❑ Fitting location ⇒ page 257

7 - Lambda probe after catalytic converter - G130-

- ❑ Fitting location ⇒ page 256
- ❑ Fitting location of connector ⇒ page 256
- ❑ Removing and installing ⇒ page 293

8 - Engine control unit - J623-

- ❑ Fitting location ⇒ page 255
- ❑ Removing and installing ⇒ page 287
- ❑ After renewing, adapt throttle valve module in mode “Guided Fault Finding”, option “Adapt throttle valve module”
- ❑ After renewing on vehicles with automatic gearbox, also perform kick-down adaption in “Guided Fault Finding”, option “Adapt kickdown point”

9 - Throttle valve module - J338-

- ❑ After renewing adapt in mode “Guided Fault Finding”, option “Adapt throttle valve module”.

10 - Activated charcoal filter solenoid valve 1 - N80-

11 - Bracket for connectors

- ❑ Fitting locations of connectors ⇒ page 256

12 - Intake air temperature sender - G42- / intake manifold pressure sender - G71-

- ❑ Fitting location ⇒ page 258

13 - Intake manifold flap valve - N316-

Fitting location ⇒ page 258

14 - Knock sensor 1 - G61-

- ❑ Fitting location ⇒ page 258
- ❑ Fitting location of connector ⇒ page 257

15 - Variable intake manifold position sender - G513-

- ❑ Fitting location ⇒ page 258

16 - Variable intake manifold flap change-over valve - N239-

- ❑ Fitting location ⇒ page 258

17 - Coolant temperature sender - G62-

- ❑ Fitting location ⇒ page 258

18 - Actuator for intake manifold changeover

19 - Intake manifold flap potentiometer - G336-

- ❑ Fitting location ⇒ page 258
- ❑ After renewing, adapt in mode “Guided Fault Finding”, option “Adapt intake manifold flap potentiometer”

20 - Injectors, cylinder bank 1

- ❑ Injector, cylinder 1 - N30-
- ❑ Injector, cylinder 2 - N31-
- ❑ Injector, cylinder 3 - N32-
- ❑ Removing and installing ⇒ page 275

21 - Fuel pressure sender for low pressure - G410-

- ❑ Fitting location ⇒ page 259

22 - Hall sender - G40-

- ❑ Fitting location ⇒ page 257

Engine compartment (left-side)

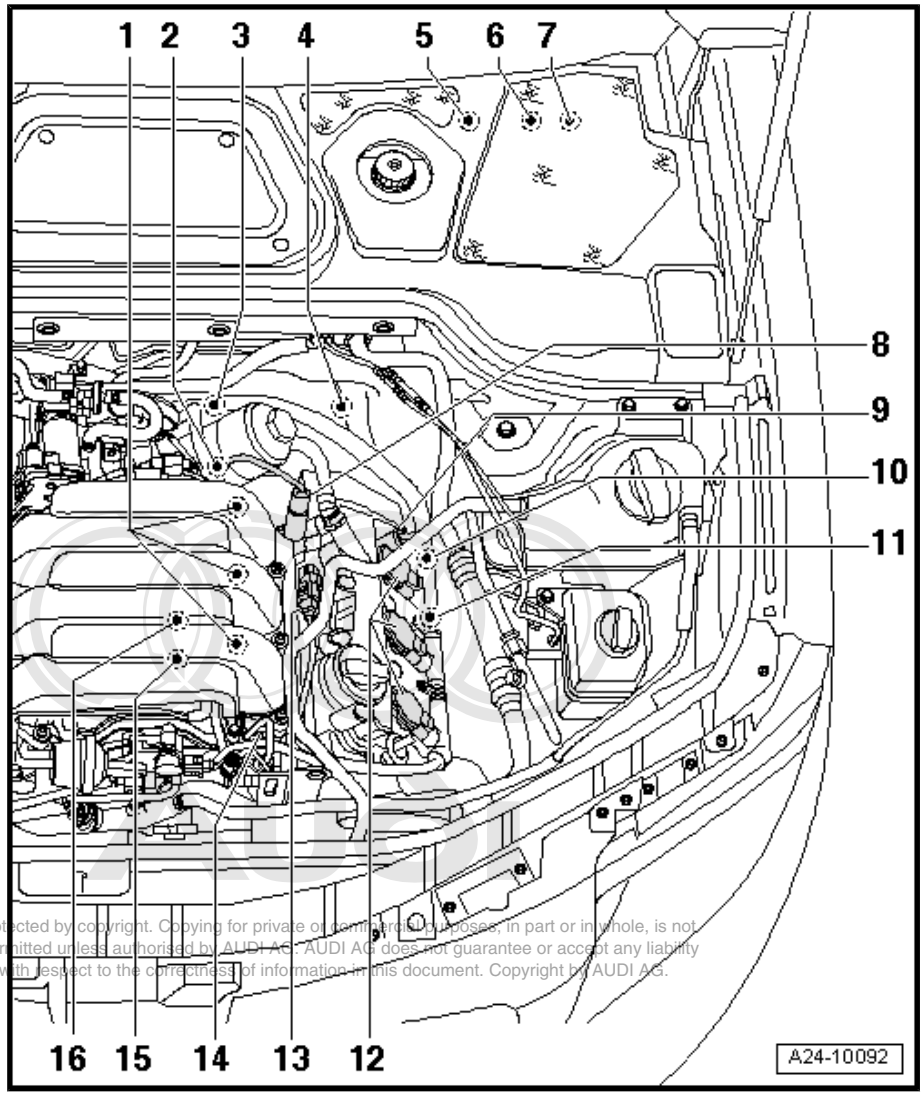

1 - Injectors, cylinder bank 2

- ❑ Injector, cylinder 4 - N33-
- ❑ Injector, cylinder 5 - N83-
- ❑ Injector, cylinder 6 - N84-
- ❑ Removing and installing ⇒ page 275

2 - Intake manifold flap potentiometer 2 - G512-

- ❑ Fitting location ⇒ page 259
- ❑ After renewing, adapt in mode “Guided Fault Finding”, option “Adapt intake manifold flap potentiometer”

3 - Engine speed sender - G28-

- ❑ Fitting location ⇒ page 259

4 - Lambda probe 2 after catalytic converter - G131-

- ❑ Fitting location ⇒ page 256
- ❑ Fitting location of connector ⇒ page 256
- ❑ Removing and installing ⇒ page 295

5 - Instrument cluster

- ❑ With exhaust emissions warning lamp - K83- (“MIL” lamp) and electronic power control fault lamp - K132- (“EPC” lamp)

6 - Accelerator position sender - G79- and accelerator position sender 2 - G185-

- ❑ In accelerator pedal module; fitting location ⇒ page 255

7 - Brake light switch - F- / brake pedal switch - F47-

- ❑ Fitting location ⇒ page 256

8 - Camshaft control valve 2 - N208-

Fitting location ⇒ page 257

9 - Exhaust camshaft control valve 2 - N319-

- ❑ Fitting location ⇒ page 257

10 - Lambda probe 2 - G108-

- ❑ Fitting location ⇒ page 256
- ❑ Fitting location of connector ⇒ page 256
- ❑ Removing and installing ⇒ page 292

11 - Hall sender 4 - G301-

- ❑ Fitting location ⇒ page 257

12 - Ignition coils for cylinder bank 2

- ❑ Ignition coil 4 with output stage - N292-
- ❑ Ignition coil 5 with output stage - N323-

- ❑ Ignition coil 6 with output stage - N324-
- ❑ Removing and installing ⇒ page 320

13 - Hall sender 2 - G163-

- ❑ Fitting location ⇒ page 257

14 - High-pressure pump

- ❑ With fuel metering valve - N290-
- ❑ Fitting location ⇒ page 258

15 - Fuel pressure sender - G247-

- ❑ Fitting location ⇒ page 259

16 - Knock sensor 2 - G66-

- ❑ Fitting location ⇒ page 259
- ❑ Fitting location of connector ⇒ page 257

Fitting location of engine control unit - J623-

- ♦ The engine control unit - J623- -Item 1- is located on top of electronics box at plenum chamber.

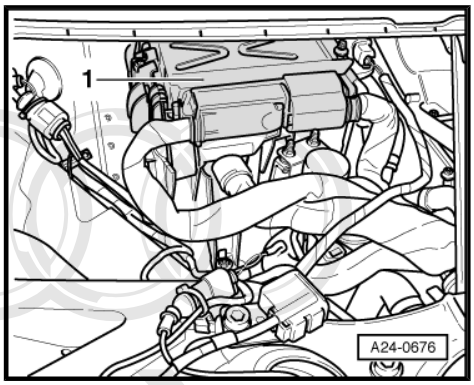

Fitting location of accelerator position sender - G79- / accelerator position sender 2 - G185-

- ♦ In accelerator pedal module -arrow-

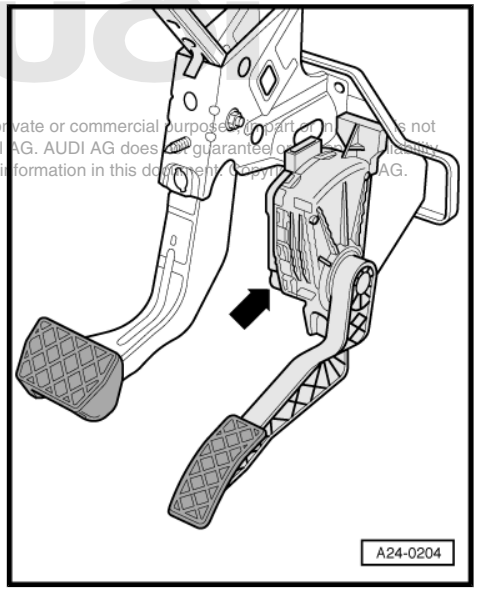

Note

The accelerator position sender - G79- and accelerator position sender 2 - G185- are integrated in the accelerator pedal module and cannot be renewed individually.

Fitting location of brake light switch - F- and brake pedal switch - F47-

- On pedal bracket -arrow-

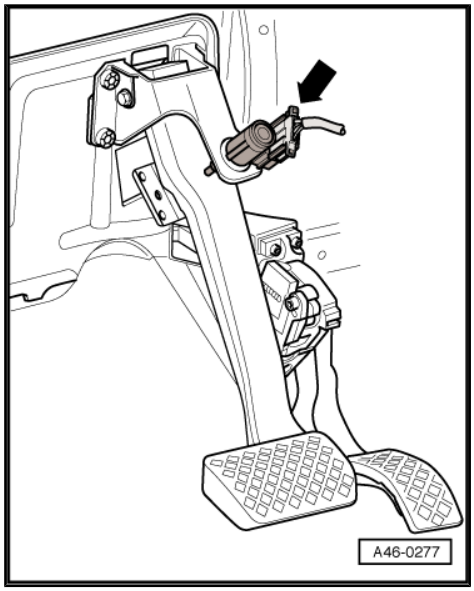

Note

Switches must not be installed more than once, otherwise they may not fit securely.

Bracket for connectors on plenum chamber partition panel

1 - To Lambda probe after catalytic converter - G130-

2 - To Lambda probe - G39-

3 - To Lambda probe 2 - G108-

4 - To Lambda probe 2 after catalytic converter - G131-

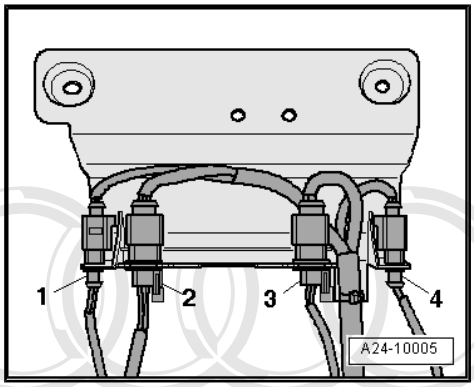

Fitting location of Lambda probes on cylinder bank 1 (right-side)

1 - Lambda probe after catalytic converter - G130-

2 - Lambda probe - G39-

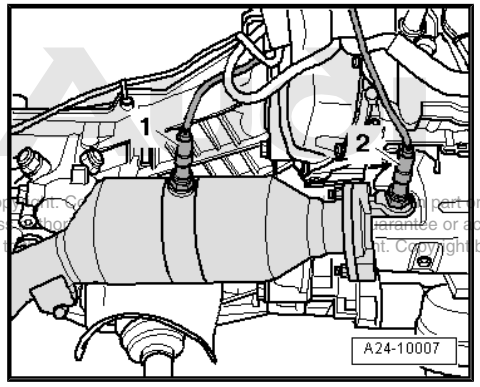

Fitting location of Lambda probes on cylinder bank 2 (left-side)

1 - Lambda probe 2 - G108-

2 - Lambda probe 2 after catalytic converter - G131-

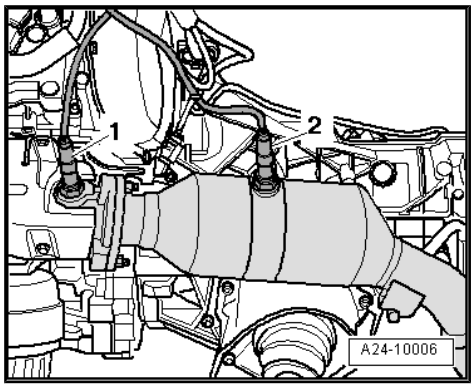

Electrical connectors at rear right of engine

1 - To injectors on cylinder bank 1

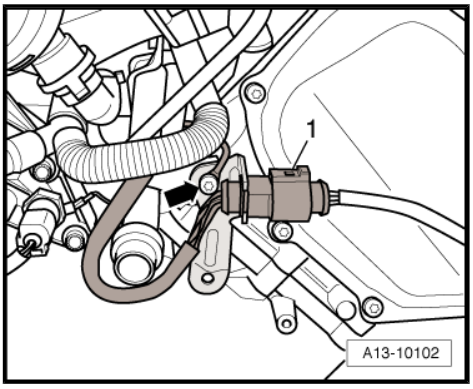

Note

The -arrow- indicates the earth point.

Electrical connectors at rear left of engine

1 - Green; to knock sensor 1 - G61-

2 - Grey; to knock sensor 2 - G66-

3 - To injectors on cylinder bank 2 and to fuel pressure sender - G247-

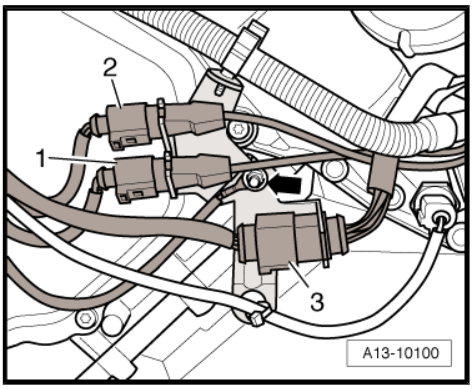

Note

The -arrow- indicates the earth point.

Hall senders and camshaft control valves (bank 1)

1 - Exhaust camshaft control valve 1 - N318-

2 - Camshaft control valve 1 - N205-

3 - Hall sender - G40-

4 - Intake manifold flap potentiometer - G336-

5 - Hall sender 3 - G300-

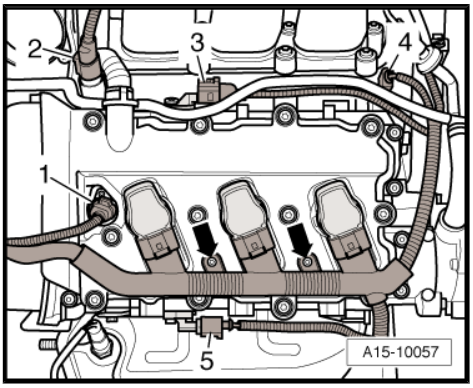

Note

Disregard -arrows-.

Hall senders and camshaft control valves (bank 2)

1 - Hall sender 2 - G163-

2 - Camshaft control valve 2 - N208-

3 - Exhaust camshaft control valve 2 - N319-

4 - Hall sender 4 - G301-

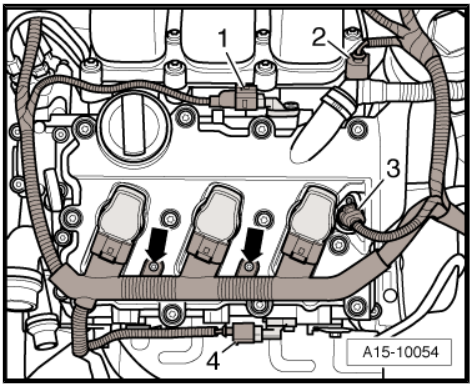

Note

Disregard -arrows-.

Fitting location: at front of engine

1 - Coolant temperature sender - G62-

2 - Variable intake manifold flap change-over valve - N239-

3 - Variable intake manifold position sender - G513-

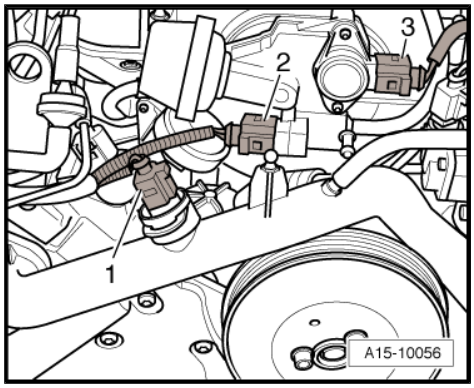

Fitting location: at rear of intake manifold

1 - Camshaft control valve 1 - N205-

2 - Throttle valve module - J338-

3 - Activated charcoal filter solenoid valve 1 - N80-

4 - Intake air temperature sender - G42- / intake manifold pressure sender - G71-

5 - Intake manifold flap valve - N316-

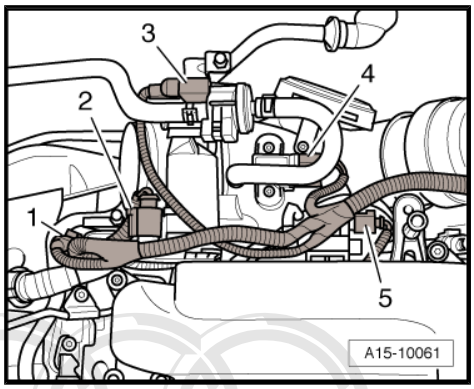

Fitting locations at high-pressure pump

2 - Fuel metering valve - N290-

Note

- *-Item 1- is not fitted.*
- *Disregard -arrows-.*

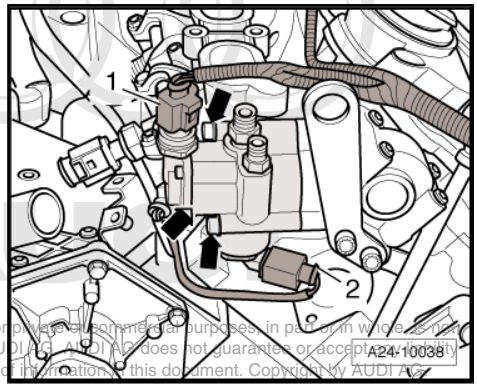

Fitting locations below intake manifold on cylinder bank 1 (right-side)

1 - Intake manifold flap potentiometer - G336-

2 - Injector, cylinder 1 - N30-

3 - Knock sensor 1 - G61-

4 - Injector, cylinder 2 - N31-

5 - Injector, cylinder 3 - N32-

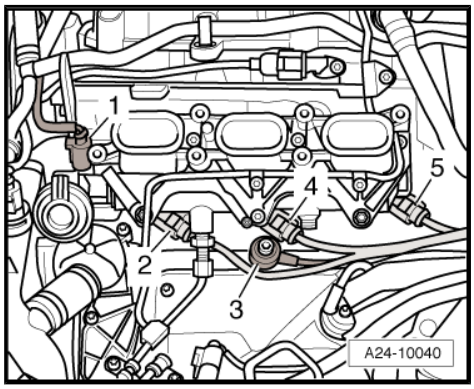

Fitting locations below intake manifold on cylinder bank 2 (left-side)

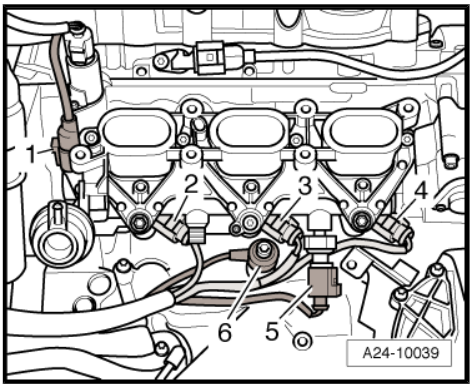

1 - Intake manifold flap potentiometer 2 - G512-

2 - Injector, cylinder 6 - N84-

3 - Injector, cylinder 5 - N83-

4 - Injector, cylinder 4 - N33-

5 - Fuel pressure sender - G247-

6 - Knock sensor 2 - G66-

Fitting location of variable intake manifold change-over valve - N335-

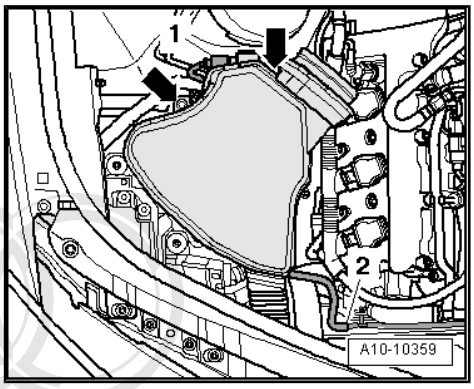

1 - Variable intake manifold change-over valve - N335-

2 - Vacuum hose to variable intake manifold change-over valve

Note

Disregard -arrows-.

Fitting location of engine speed sender - G28-

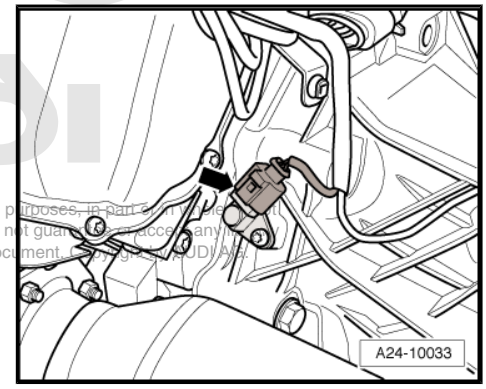

- At front left of gearbox housing -arrow-

Fitting location of fuel pressure sender for low-pressure section - G410-

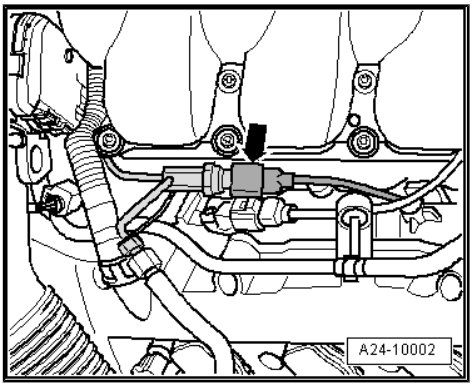

- On right side of cylinder head -arrow-.

Fitting location of solenoid valves for electro-hydraulic engine mountings and valves for gearbox mountings

- Left electro-hydraulic engine mounting solenoid valve - N144-
- Right electrohydraulic engine mounting solenoid valve - N145-
- Gearbox mounting valve 1 - N262-
- Gearbox mounting valve 2 - N263-

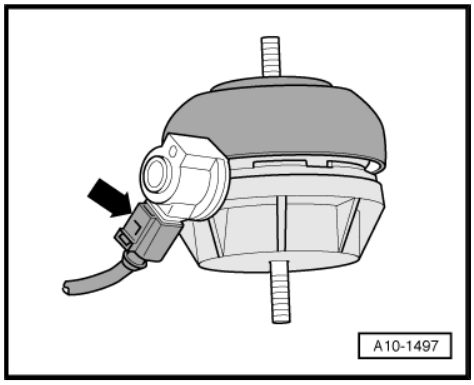

Fitting location of Motronic current supply relay - J271-

- Motronic current supply relay - J271- at position -2- on relay carrier in electronics box (plenum chamber)

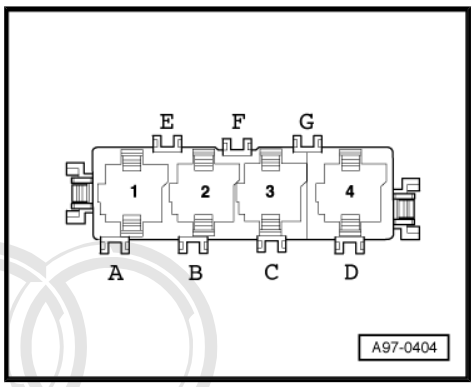

Fitting location of terminal 15 voltage supply relay - J329-

- Terminal 15 voltage supply relay - J329- at position -3- on relay carrier behind dash panel (left-side)

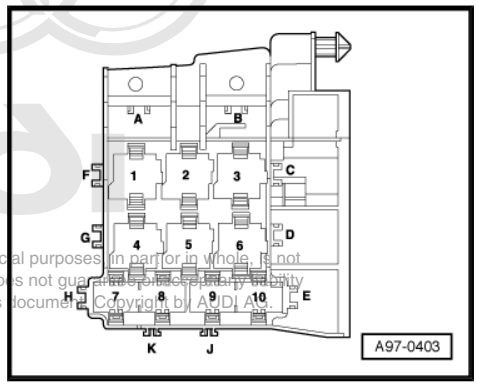

Fitting location of cold start relay for fuel pump - J748-

- Cold start relay for fuel pump - J748- at position -3- in relay and fuse holder in luggage compartment (right-side)

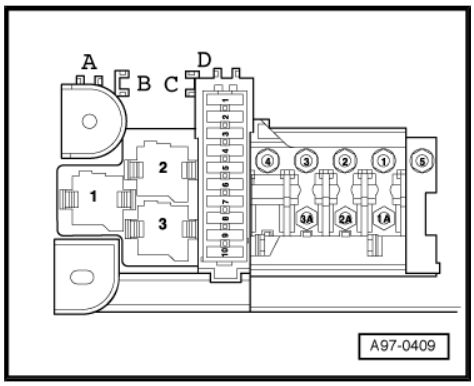

Fitting location of engine component current supply relay - J757-

- Engine component current supply relay - J757- at position -4- on relay carrier in front passenger's footwell

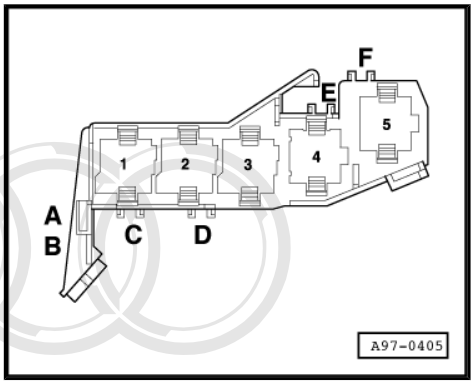

1.3 Procedure before opening high-pressure section of injection system

Caution

The injection system consists of a high-pressure section (maximum approx. 120 bar) and a low-pressure section (approx. 7 bar).

Prior to opening the high-pressure section (e.g. when removing the high-pressure pump, fuel rail, injectors, fuel pipes or fuel pressure sender - G247-), the fuel pressure in the high-pressure section must be reduced to a residual pressure of approx. 7 bar. The procedure is described below.

Reducing fuel pressure in high-pressure section

– Connect a vehicle diagnostic tester.
– Start engine and run at idling speed.
– Select “Engine electronics” in vehicle self-diagnosis.
– Then select “Basic setting”.
– Select measured value block 140 in basic setting function.
– With engine idling the fuel pressure is displayed in zone 3.
- Specification: between 35 and 45 bar
– Activate basic setting by touching key.
– The fuel pressure should drop now.

Example:

1 - 0 %

2 - 0 bar

3 - 5.46 bar

4 - reduce

– Switch off ignition as soon as fuel pressure has dropped to approx. 6 bar.

The fuel rail is still filled with fuel, however it is no longer under high pressure.

WARNING

There is a risk of injury: avoid skin contact with fuel.

- *Wear safety goggles and protective clothing when opening the fuel system.*
- *Before opening the high-pressure section of the fuel system, place a clean cloth around the connection to catch escaping fuel.*

– The high-pressure system must be opened »immediately« after reducing the fuel pressure; wrap a clean cloth around the connection. Catch the escaping fuel.

Additional steps required

– Erase event memory and generate readiness code in engine control unit in “Guided Functions” mode.

1.4 Checking fuel system for leaks

– Allow engine to run for several minutes at moderate rpm.

– Switch off ignition.

– Check complete fuel system for leaks.

– If leaks are found although the connections have been tightened to the correct torque, renew the relevant component.

– Road-test vehicle and accelerate with full throttle at least once.

– Then inspect high-pressure section of fuel system again for leaks.

1.5 Air cleaner - exploded view

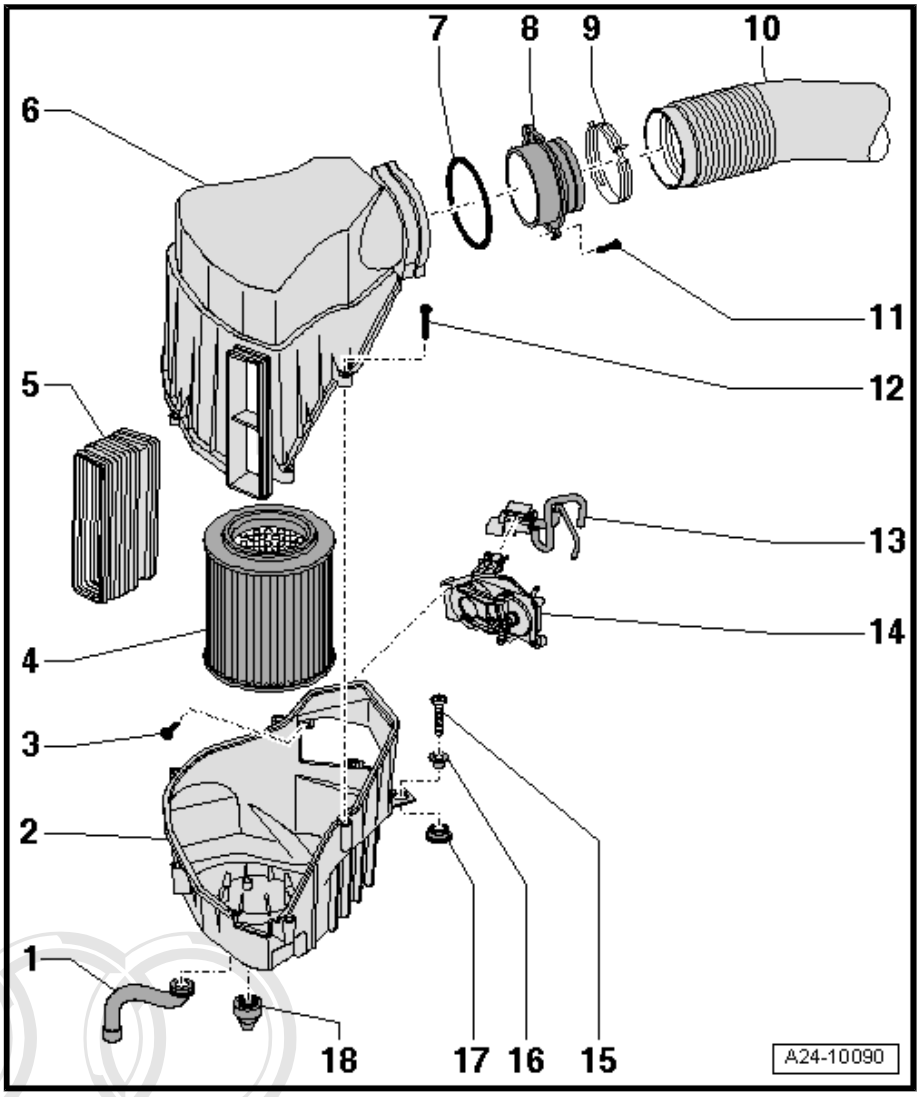

1 - Water drain hose

- ❑ Check for dirt and clean as required (inspect valve)
- ❑ Water drain must function properly

2 - Air cleaner housing (bottom section)

- ❑ Clean any salt deposits or leaves and dirt out of air cleaner housing (bottom section)
- ❑ Check for dirt in water drain (inspect valve)

3 - Bolt

4 - Air filter element

- ❑ Always use genuine part for air filter element
- ❑ Removing and installing ⇒ page 264
- ❑ Change intervals ⇒ Maintenance tables

5 - Air duct

- ❑ Clean dirt and leaves out of air duct

6 - Air cleaner housing (top section)

- ❑ Clean any salt deposits or leaves and dirt out of air cleaner housing (top section)

7 - O-ring

- ❑ Renew

8 - Intake connecting pipe

9 - Spring-type clip

10 - Air hose

11 - Cross-head screw

12 - Cross-head screw

13 - Variable intake manifold change-over valve - N335-

14 - Air flap

- ❑ Vacuum-controlled

15 - 5 Nm

16 - Spacer sleeve

17 - Rubber grommet

18 - Rubber mounting

1.6 Removing and installing air filter element

Removing

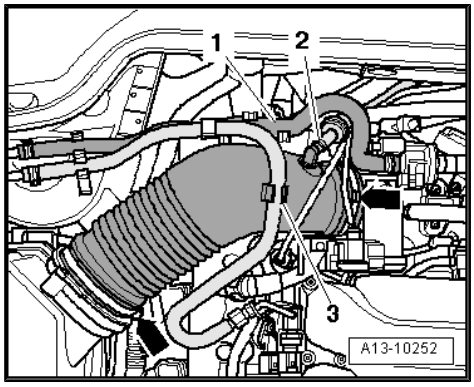

- Pull non-return valve -2- off connection at air intake hose.
- Unclip vacuum line -1- and fuel line -3- from retainer on air intake hose.
- Release hose clips -arrows- and remove air intake hose.

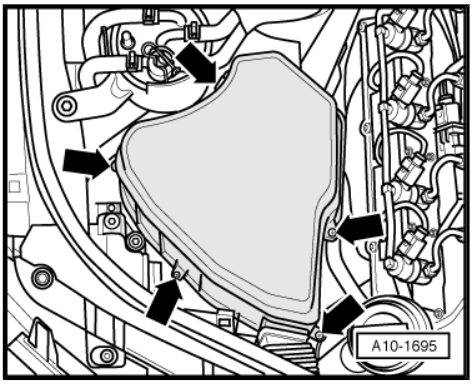

– Remove bolts from top section of air cleaner housing -arrows-.
– Detach air cleaner housing (top section).
– Take out air filter element.

Installing

Note

- *Always use genuine part for air filter element.*
- *Hose connections and hoses for air intake system must be free of oil and grease before assembly. Do not use any lubricants containing silicone when assembling.*
- *The air cleaner housing MUST be clean.*
- *Secure all hose connections with the correct type of hose clips (same as original equipment) ⇒ Electronic parts catalogue .*
- *To prevent malfunctions, cover all critical parts of the engine air intake tract (intake pipes, etc.) with a clean cloth when blowing out the air cleaner housing with compressed air.*
- *Please observe requirements for disposal.*

– Blow out water drain (small hole in bottom section of air cleaner housing) with compressed air.
– Clean salt residue, dirt and leaves out of air cleaner housing (top and bottom sections); use a vacuum cleaner if necessary.
– Check for salt residue, dirt and leaves in air intake hose (engine intake side).
– Check for dirt and leaves in air duct going from lock carrier to air cleaner housing.
– When installing the air filter element, check that it is properly centred in the retainer in the air cleaner housing (bottom section).
– Fit the top section of the air cleaner housing carefully on the bottom section, without using force. Make sure the top section of the air cleaner housing is fitted straight on the air filter element (note position of sealing lip on air filter element).

The remaining installation steps are carried out in the reverse sequence.

Tightening torque

Component	Nm
Hose clips (9 mm wide)	3

1.7 Intake manifold (top section) - exploded view

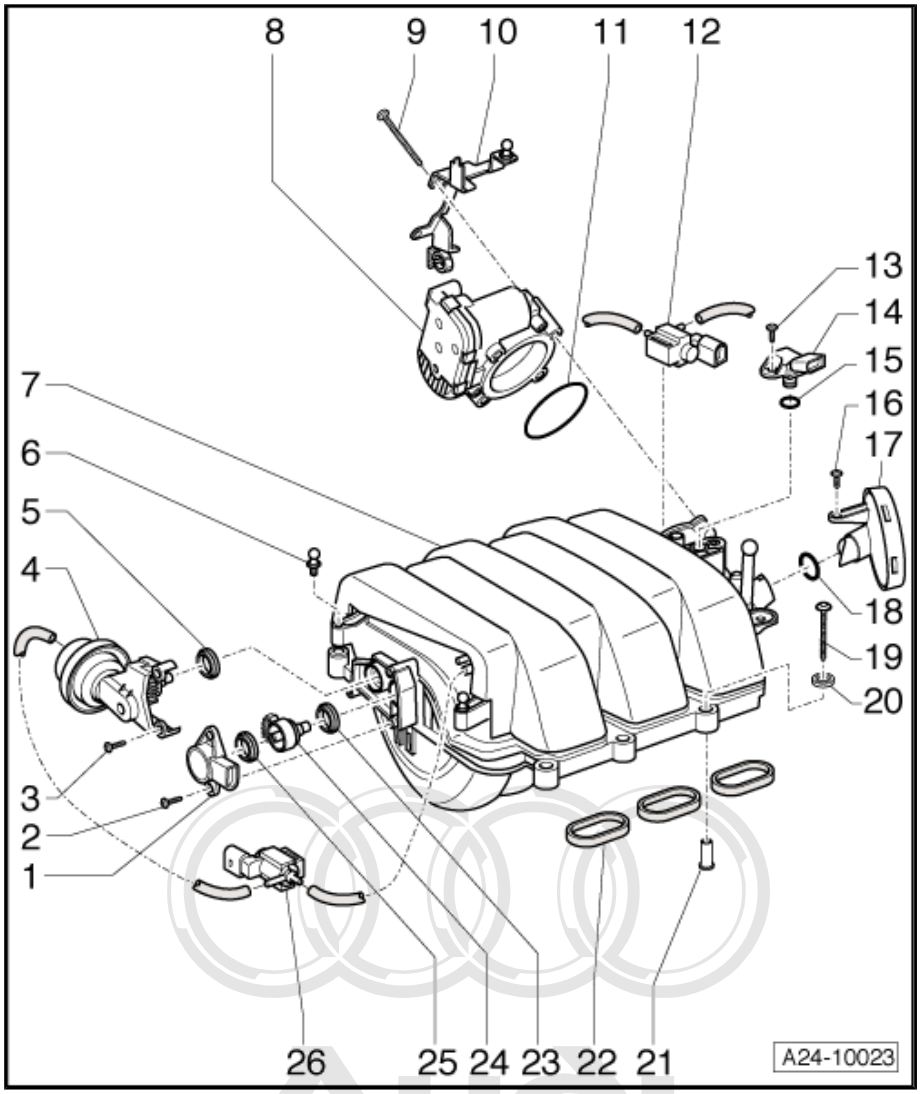

1 - Variable intake manifold position sender - G513-

2 - 2.5 Nm

3 - 2.5 Nm

4 - Actuator for intake manifold change-over

- ❑ Installation position of toothed segments for intake manifold change-over ⇒ page 267
- ❑ Replacement part is combined with -item 24- as one unit

5 - Seal

- ❑ Renew if damaged
- ❑ When renewing lever out with screwdriver
- ❑ Press in by hand

6 - Ball stud, 2.5 Nm

7 - Intake manifold (top section)

- ❑ Removing and installing ⇒ page 267

8 - Throttle valve module - J338-

9 - 5 Nm

10 - Bracket for wiring harness

11 - Seal

- ❑ Renew

12 - Intake manifold flap valve - N316-

13 - 2.5 Nm

14 - Intake air temperature sender - G42- / intake manifold pressure sender - G71-

15 - O-ring

- ❑ Renew

16 - 2.5 Nm

17 - Pressure control valve for crankcase breather system

18 - O-ring

- ❑ Renew

19 - 6 Nm

20 - Washer

21 - Sleeve

22 - Gaskets

- ❑ Renew

23 - Seal

- ❑ Renew if damaged
- ❑ When renewing lever out with screwdriver
- ❑ Press in by hand

24 - Lever with toothed segment

- ❑ For intake manifold change-over
- ❑ Installation position of toothed segments ⇒ page 267
- ❑ Replacement part is combined with -item 4- as one unit

25 - Seal

- ❑ Renew if damaged
- ❑ When renewing lever out with screwdriver
- ❑ Press in by hand

26 - Variable intake manifold flap change-over valve - N239-

Installation position of toothed segments for intake manifold change-over

- The lower edges of the toothed segments must be flush -arrows-.

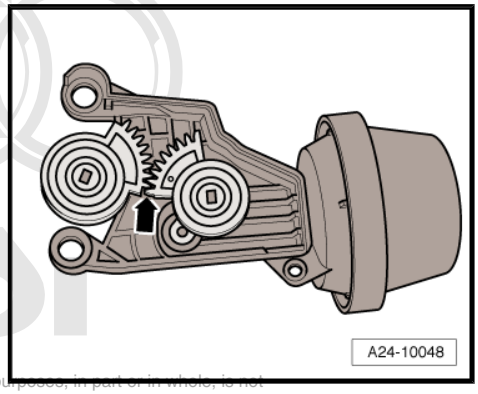

1.8 Removing and installing intake manifold (top section)

Removing

Note

All cable ties which are released or cut open when removing must be fitted in the same position when installing.

– Pull off engine cover panel (rear) -arrows-.

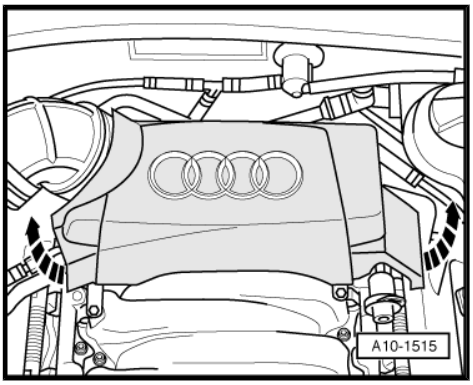

– Pull off engine cover panel (front) -arrows-.

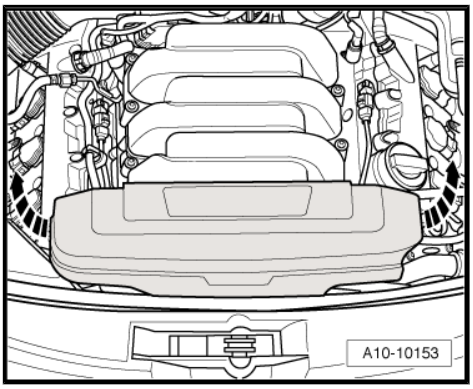

– Pull non-return valve -2- off connection at air intake hose.

– Unclip vacuum line -1- and fuel line -3- from retainer on air intake hose.

– Release hose clips -arrows- and remove air intake hose.

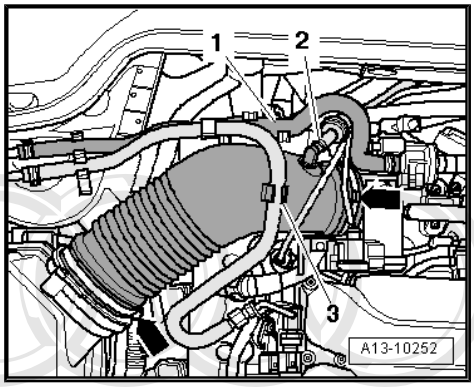

– Unplug electrical connectors:

1 - Variable intake manifold flap change-over valve - N239-

2 - Variable intake manifold position sender - G513-

– Pull off the vacuum hoses -arrow A- and -arrow B-.

USA models:

– Detach vacuum hose -arrow C- leading to fuel system diagnostic pump.

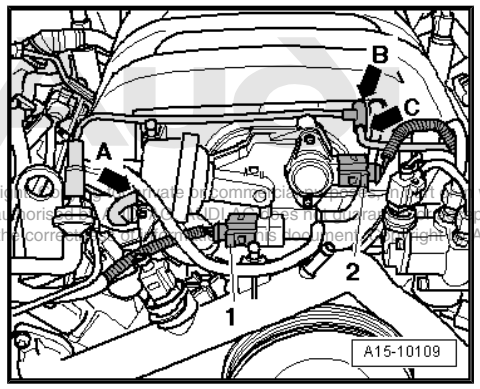

All vehicles:

– Unplug electrical connectors:

1 - Camshaft control valve 1 - N205-

2 - Throttle valve module - J338-

3 - Activated charcoal filter solenoid valve 1 - N80-

4 - Intake air temperature sender - G42- / intake manifold pressure sender - G71-

5 - Intake manifold flap valve - N316-

– Move electrical wiring harness clear.

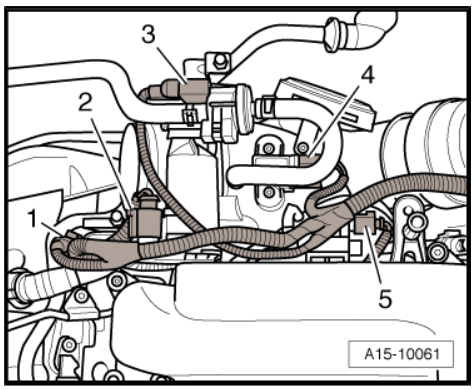

– Detach vacuum hoses -arrows-.

– Detach active charcoal filter system solenoid valve 1 - N80- -item 1- from throttle valve module - J338- .

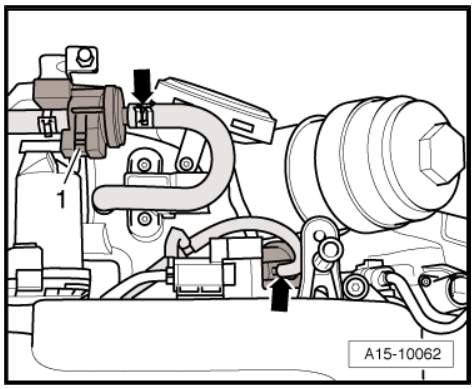

– Pull crankcase breather hose off pressure control valve -arrow-.

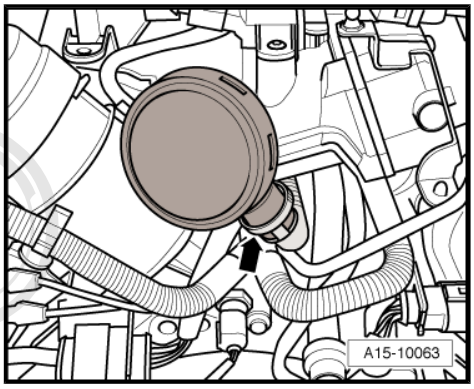

Note

Shown from rear with engine removed for illustration purposes.

– Unscrew bolts -arrows- and detach intake manifold (top section).

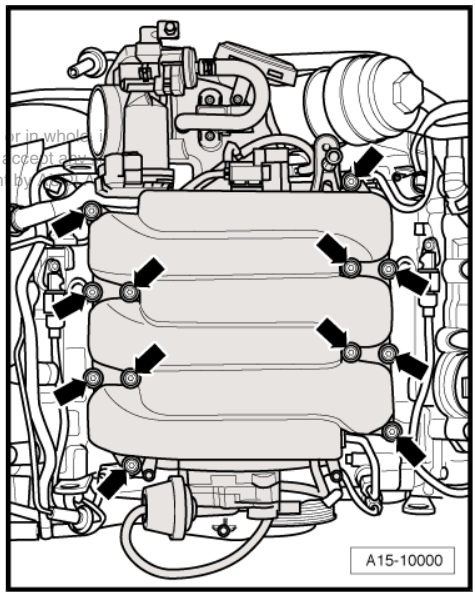

Note

Seal intake ports on cylinder heads with clean cloths.

Installing

Installation is carried out in the reverse order; note the following:

Note

- *Renew gaskets, seals and O-rings.*
- *Fit all cable ties in the original positions when installing.*
- *Secure all hose connections with the correct type of hose clips (same as original equipment) ⇒ Electronic parts catalogue .*

Tightening torques

Component	Nm
Intake manifold (top section) to intake manifold (bottom section)	6 [1)]
Hose clips (9 mm wide)	3
• [1)] Tighten in stages and in diagonal sequence	

1.9 Intake manifold (bottom section) - exploded view

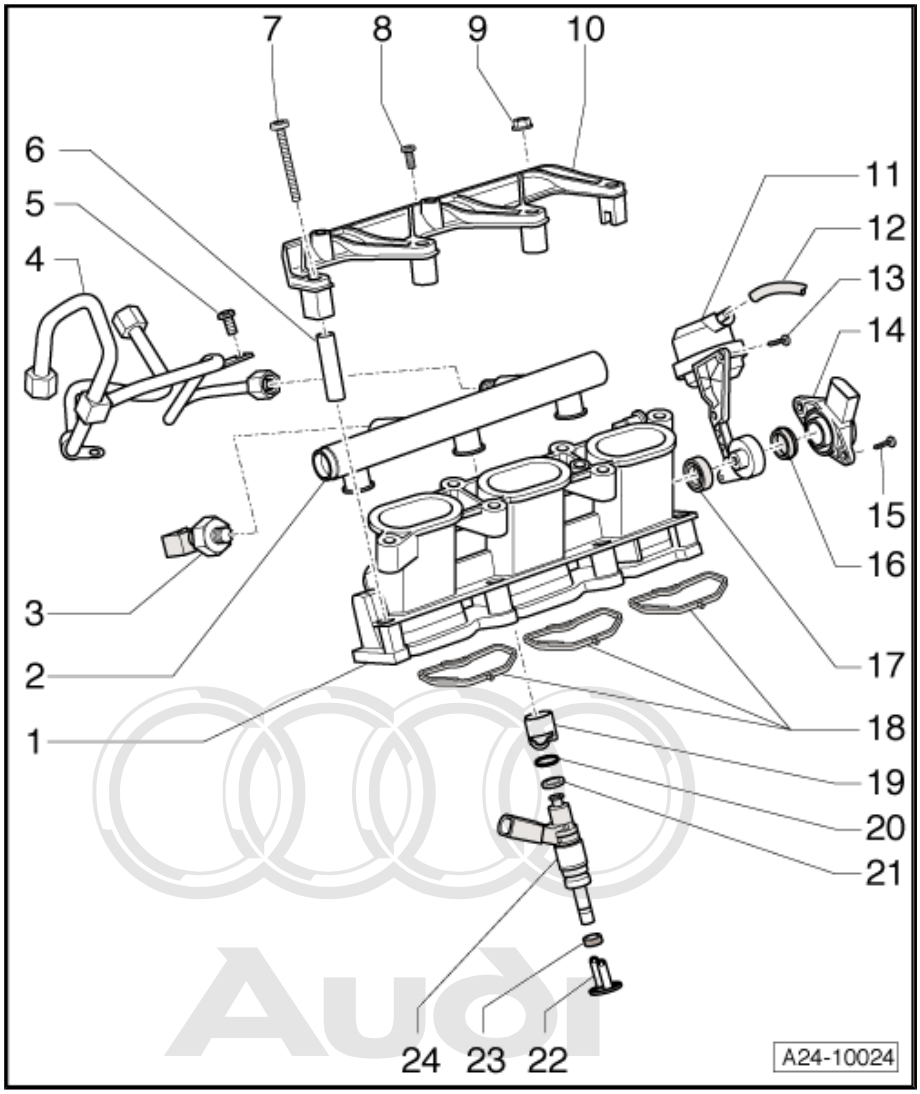

1 - Bottom section of intake manifold

- ❑ Removing and installing ⇒ page 272
- ❑ After installing, adapt the two intake manifold flap potentiometers in mode “Guided Fault Finding”, option “Adapt intake manifold flap potentiometer”

2 - Fuel rail

3 - Fuel pressure sender - G247-

4 - High-pressure pipes

> ⚠ **WARNING**
>
> *The pressure in the high-pressure part of the injection system must be reduced to a residual pressure prior to opening the system ⇒ page 261 .*
>
> *A clean cloth must then be wrapped around the connection and the residual pressure dissipated by carefully loosening the connection.*

- ❑ Do not alter shape
- ❑ Tightening high-pressure pipes ⇒ page 274

5 - 10 Nm

6 - Sleeve

7 - 10 Nm

8 - 2.5 Nm

9 - 10 Nm

10 - Retainer for fuel rail

11 - Vacuum unit for actuating intake manifold flaps

12 - Vacuum hose

- ❑ To intake manifold flap valve - N316-

13 - 2.5 Nm

14 - Intake manifold flap potentiometer

- ❑ Left side: intake manifold flap potentiometer 2 - G512- , right side: intake manifold flap potentiometer - G336-

15 - 2.5 Nm

16 - Seal

- ❑ Renew if damaged
- ❑ When renewing lever out with screwdriver
- ❑ Press in by hand

17 - Seal

- ❑ Renew if damaged
- ❑ When renewing lever out with screwdriver
- ❑ Press in by hand

18 - Gaskets

- ❑ Renew

19 - Support ring

- ❑ Make sure it is correctly seated
- ❑ Via this support ring, the fuel rail exerts the force which holds the injector in the cylinder head

20 - O-ring

- ❑ Renew
- ❑ Lubricate lightly with clean engine oil

21 - Spacer ring

- ❑ Renew if damaged

22 - Radial compensation element

- ❑ Renew if damaged
- ❑ Clip onto support ring -item 19-

23 - Combustion chamber ring seal

- ❑ Renewing ⇒ “1.11 Removing and installing injectors”, page 275

24 - Injector

Removing and installing ⇒ page 275

1.10 Removing and installing intake manifold (bottom section) with fuel rail

Special tools and workshop equipment required

- Socket, 14 mm - 3150-
- Torque wrench - V.A.G 1331-
- Ratchet - V.A.G 1331/1-
- Open ring spanner insert, AF 17 -V.A.G 1331/2-
- Socket insert AF 14, flared ring spanner - V.A.G 1331/8-
- Socket - T40055-

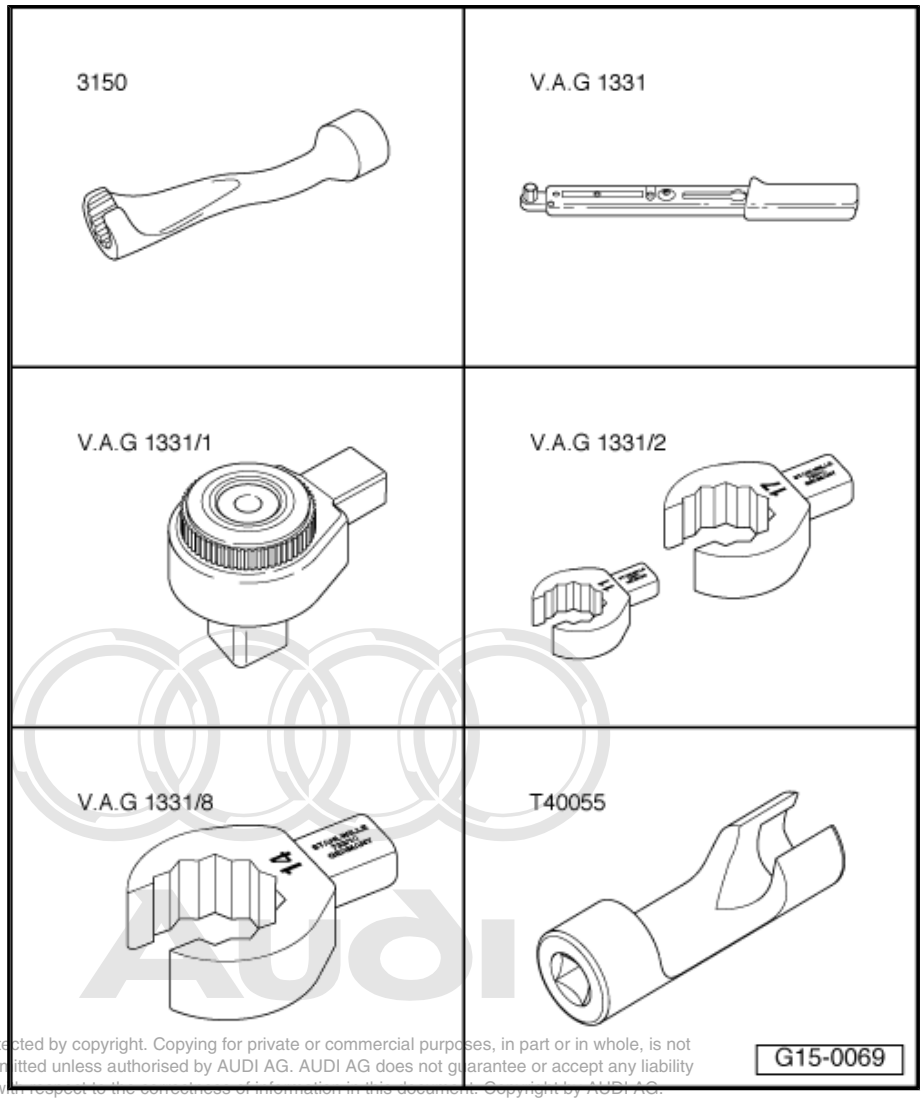

- Hand vacuum pump - VAS 6213-

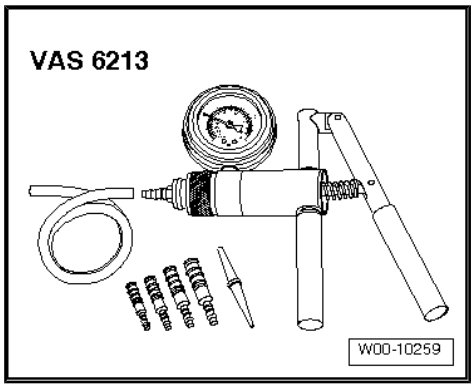

Removing

Note

The following description shows the removal and installation of the left-side intake manifold (bottom section). The procedure for the other side is identical.

WARNING

- ***The fuel system operates under high pressure. The pressure in the high-pressure part of the injection system must be reduced to a residual pressure prior to opening the system*** ⇒ page 261 .
- ***A clean cloth must then be wrapped around the connection and the residual pressure dissipated by carefully loosening the connection.***

– Remove intake manifold (top section) ⇒ page 267 .

– Remove high-pressure pipe by unscrewing bolts and union nuts -1 … 7-.

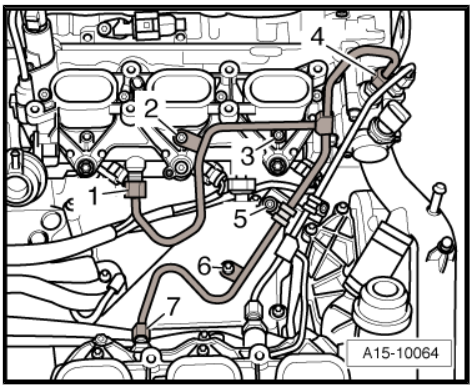

– Unplug electrical connectors:

1 - Intake manifold flap potentiometer 2 - G512-

2 - Fuel pressure sender - G247-

– Unscrew bolts and nuts -arrows- and detach intake manifold (bottom section) with fuel rail.

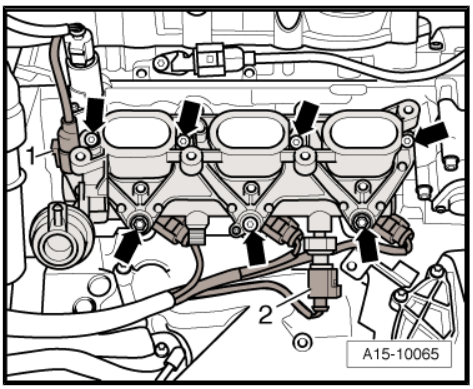

Note

Seal intake ports on cylinder heads with clean cloths.

Installing

Installation is carried out in the reverse order, note the following:

Note

- *Renew gaskets, seals and O-rings.*
- *Lightly lubricate O-rings for injectors with clean engine oil.*

– Connect hand vacuum pump - VAS 6213- to vacuum unit for actuating intake manifold flaps as shown in illustration.

– Use hand vacuum pump to generate vacuum.

• This will cause the intake manifold flaps to open.

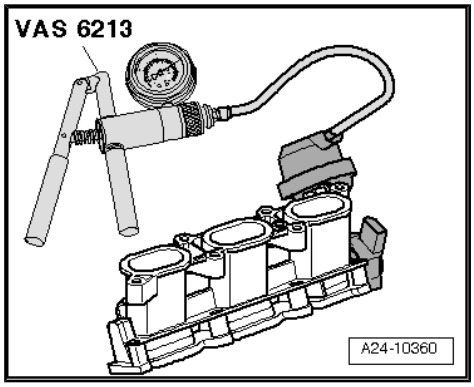

Note

If the intake manifold flaps are not opened, they can catch on the guide plates in the cylinder head when the intake manifold (bottom section) is installed.

– Install intake manifold (bottom section) and press fuel rail evenly down onto injectors.

– Tighten bolts -arrows- for intake manifold (bottom section) in diagonal sequence and in stages.

– Disconnect hand vacuum pump from vacuum unit for actuating intake manifold flaps.

– Plug in electrical connectors -1- and -2-.

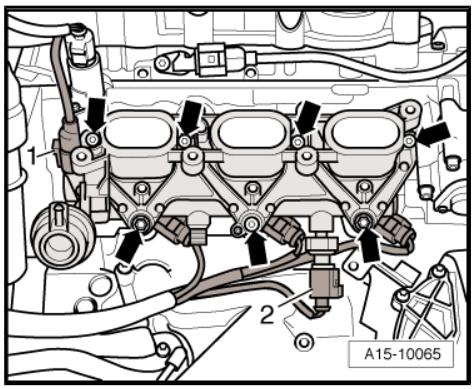

– First hand-tighten union nuts -1-, -4- and -7- for high-pressure pipes, then hand-tighten pipe mountings -2-, -3-, -5- and -6-.

– Ensure that high-pressure pipes are not under tension.

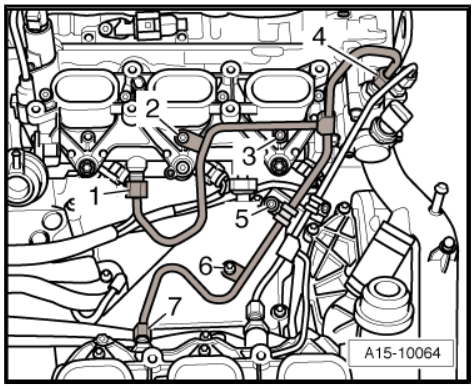

– To tighten union of high-pressure pipe (14 mm) at fuel rail, use torque wrench - V.A.G 1331- with socket insert AF 14, flared ring spanner - V.A.G 1331/8-.

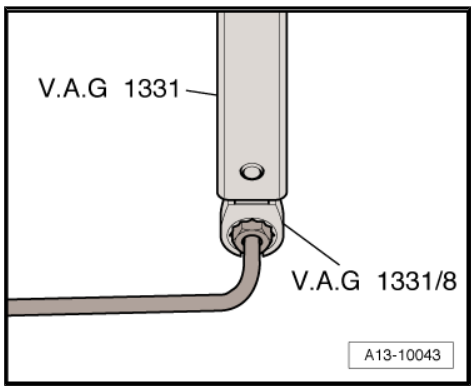

– To tighten union of high-pressure pipe (17 mm) at fuel rail, use torque wrench - V.A.G 1331- with open ring spanner insert, AF 17 -V.A.G 1331/2- .

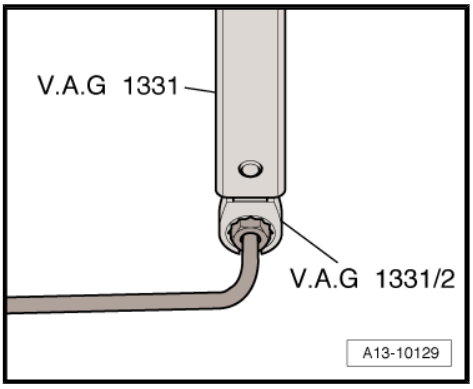

– To tighten union of high-pressure pipe (14 mm) at high-pressure pump, use torque wrench - V.A.G 1331- with ratchet - V.A.G 1331/1- and socket, 14 mm - 3150- .

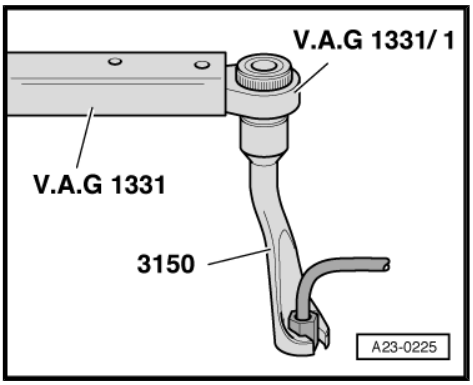

– To tighten union of high-pressure pipe (17 mm) at high-pressure pump, use torque wrench - V.A.G 1331- with ratchet - V.A.G 1331/1- and socket - T40055- .

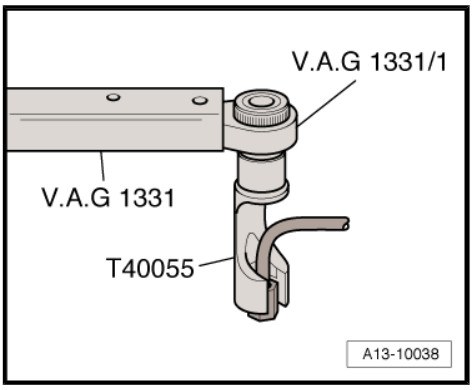

Tightening torques

Component		Nm
Intake manifold (bottom section) to cylinder head		9
High-pressure pipes to:	High-pressure pump	25
	Fuel rail	25

1.11 Removing and installing injectors

Special tools and workshop equipment required

♦ Tool set for FSI engines - T10133-

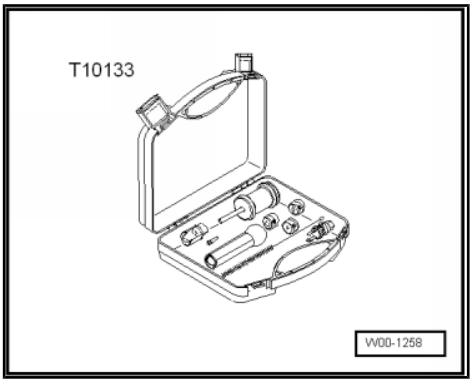

High-pressure injector - exploded view

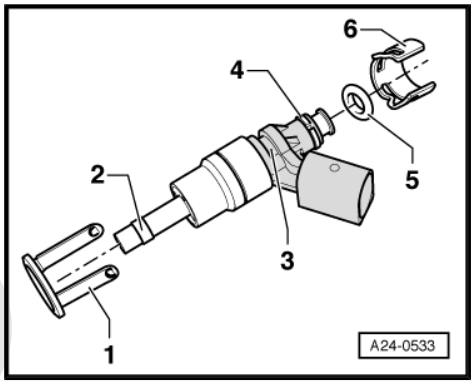

1 - Radial compensation element (renew if damaged)

2 - Combustion chamber ring seal (teflon ring seal) - renew; when fitting, do not grease ring or use any other lubricant.

3 - Groove on injector

4 - Spacer ring (renew if damaged)

5 - O-ring (renew; apply thin coating of clean engine oil prior to installation)

6 - Support ring (via the support ring the fuel rail exerts force which secures injector in cylinder head)

Removing

WARNING

- *The fuel system operates under high pressure. The pressure in the high-pressure part of the injection system must be reduced to a residual pressure prior to opening the system* *⇒ page 261* *.*
- *A clean cloth must then be wrapped around the connection and the residual pressure dissipated by carefully loosening the connection.*

– Remove intake manifold (top section) ⇒ page 267 .

– Remove corresponding bottom section of intake manifold ⇒ page 272 .

If injectors cannot be pulled out of cylinder head by hand, proceed as follows:

– Use a screwdriver to bend retainer tabs -1- of radial compensation element to side -arrow- and pull support ring -2- off injector.

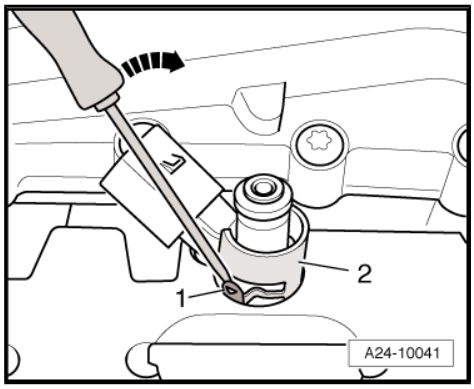

– Screw striker -T10133/3- onto puller -T10133/2- .

– Insert puller -T10133/2- into groove on injector and carefully knock out injector.

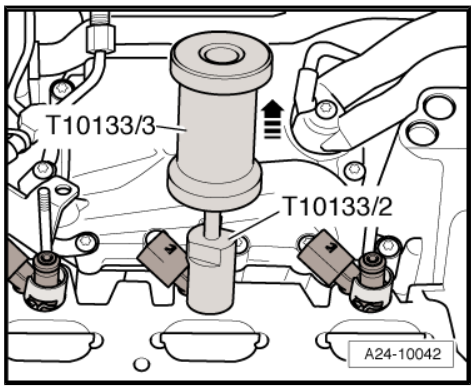

Note

When inserting the puller, there is a risk of destroying the radial compensation element due to the retainer tabs breaking.

– Carefully remove old combustion chamber ring seal -arrow-. To do so, cut open ring using knife or prise open ring with small screwdriver and then pull off forwards.

– Take care not to damage groove on injector. The injector must be renewed if the groove is damaged.

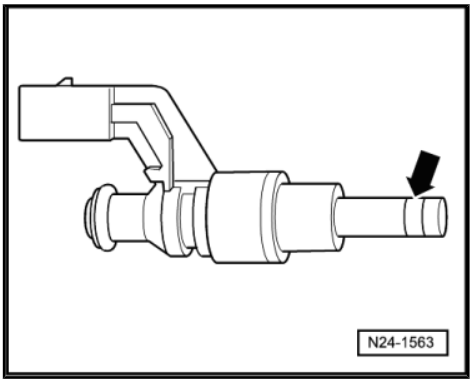

Installing

Note

- *Renew combustion chamber ring seal and O-ring.*
- *Renew spacer ring if damaged.*
- *Lightly lubricate O-rings for injectors with clean engine oil.*
- *The injector pipes must be re-installed on the same cylinders.*

– Clean bore in cylinder head with nylon cylinder brush - T10133/4- .

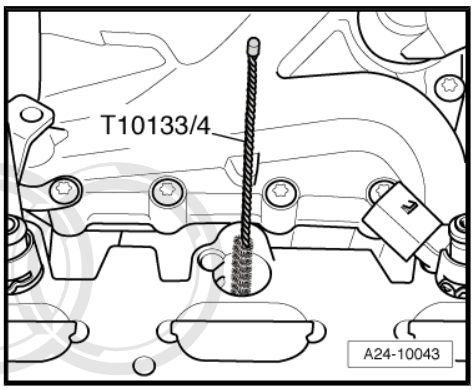

– Clip radial compensation element -1- into support ring -2-.

– When re-installing an injector, clean any combustion residue off groove for combustion chamber ring seal and injector stem with a clean cloth.

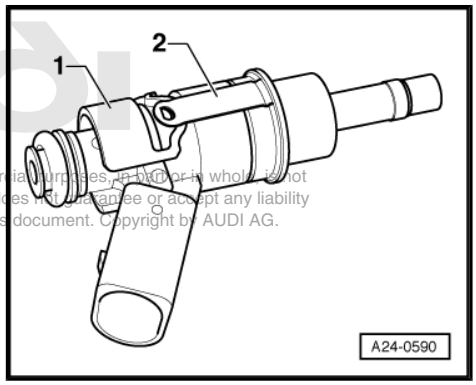

– Fit assembly cone -T10133/5- with new combustion chamber ring seal -1- onto injector -2-.

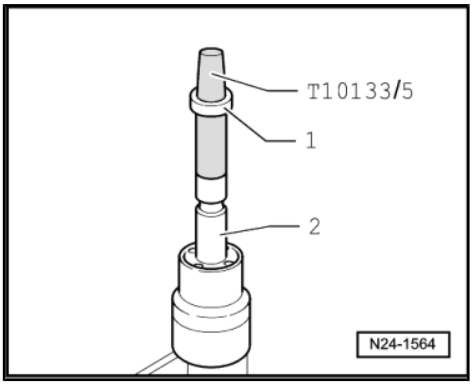

– Push combustion chamber ring seal onto assembly cone -T10133/6- as far as it will go using assembly sleeve -T10133/5- .

– Turn assembly sleeve -T10133/6- upside down and push combustion chamber ring seal into sealing ring groove.

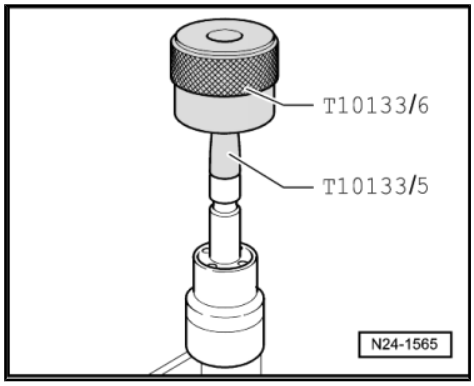

Note

The combustion chamber ring seal is widened when it is pushed onto the injector. After pushing it on, it therefore has to be compressed again. This is done in two stages, as described below.

– Push calibration sleeve -T10133/7- onto injector as far as it will go and simultaneously turn it slightly (approx. 180°).

– Pull calibration sleeve -T10133/7- off again by turning it in the opposite direction.

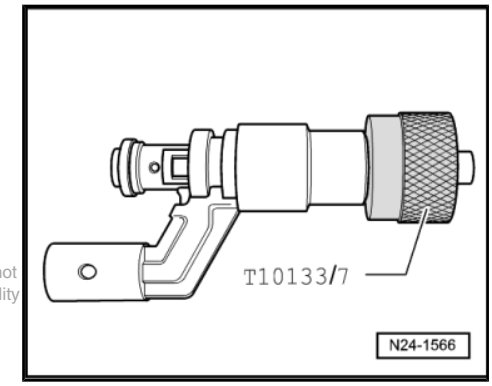

– Push calibration sleeve -T10133/8- onto injector as far as it will go and simultaneously turn it slightly (approx. 180°).

– Pull calibration sleeve -T10133/8- off again by turning it in the opposite direction.

– Lubricate new O-ring lightly with clean engine oil before installing.

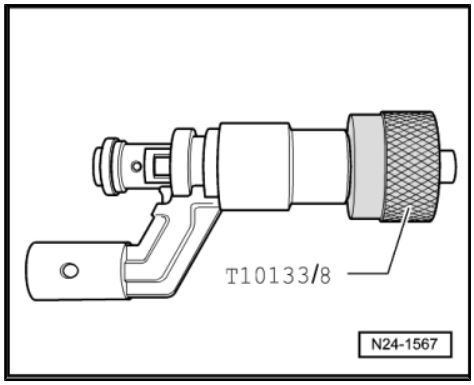

Note

The combustion chamber ring seal must not be lubricated.

– Use assembly tool -T10133/9- to push injector as far as it will go into hole in cylinder head.

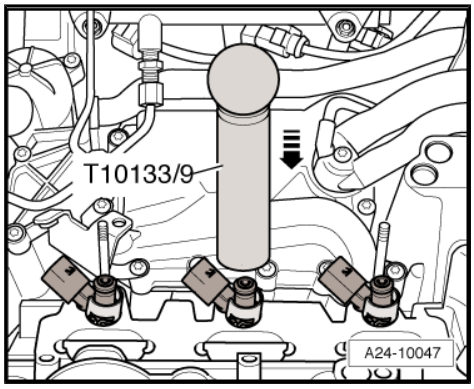

Note

It should be possible to insert the injector easily. If necessary wait until the combustion chamber ring seal has contracted sufficiently.

– Make sure injector is in correct installation position in cylinder head:

• Electrical connector of injector must engage in recess in cylinder head.

Installation is carried out in the reverse order; note the following:

– Install bottom section of intake manifold ⇒ page 272 .

– Install intake manifold (top section) ⇒ page 267 .

1.12 Checking fuel pressure and residual pressure (up to high-pressure pump)

Special tools and workshop equipment required

- K-Jetronic pressure tester - V.A.G 1318-

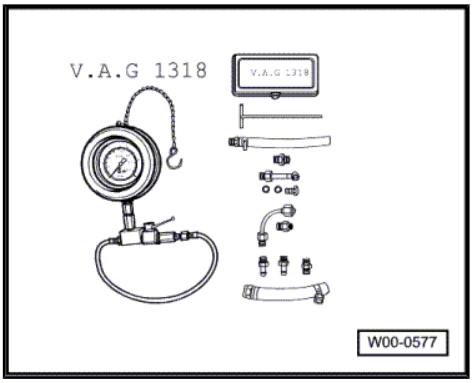

- Adapter set - V.A.G 1318/10-12-
- Remote control - V.A.G 1348/3A- for V.A.G 1348 with adapter cable -V.A.G 1348/3-3-

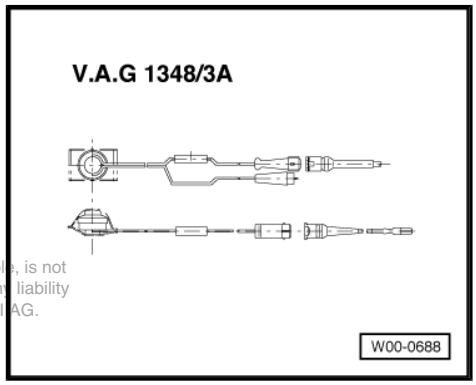

- Fuel-resistant measuring container

Test conditions

- Battery voltage at least 12.5 V.
- Fuel filter OK.
- Fuel tank at least $^{1}/_{4}$ full.
- Fuel pump control unit - J538- OK; checking ⇒ Rep. gr. 20 .
- Ignition off.

Checking fuel pressure

– Remove luggage compartment floor lining.

– Unscrew cover for flange (right-side) -arrows-.

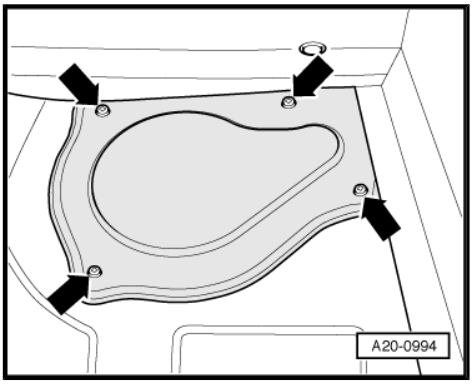

– Carefully release electrical connector -2- from flange (right-side) and unplug.

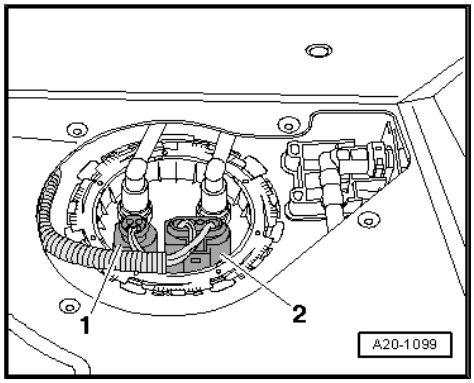

Note

Disregard -item 1-.

– Connect remote control - V.A.G 1348/3A- for V.A.G 1348 to contact -1- using adapter cable -V.A.G 1348/3-3- and test lead from auxiliary measuring set - V.A.G 1594C- .

– Tape off 2nd connector contact of adapter cable - V.A.G 1348/3-3- with insulating tape -arrow- to prevent short circuits.

– Move switch of remote control - V.A.G 1348/3A- for V.A.G 1348 to front of engine compartment.

– Connect contact -4- to body earth via an improvised auxiliary lead.

– Connect crocodile clip to battery “+”.

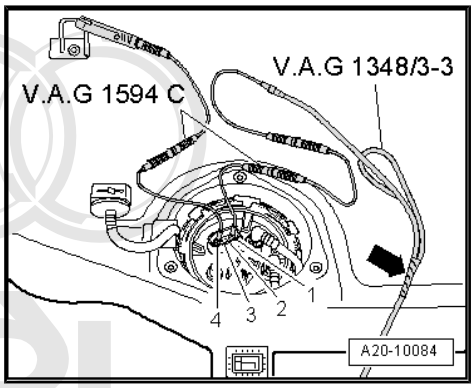

– Pull off engine cover panel (rear) -arrows-.

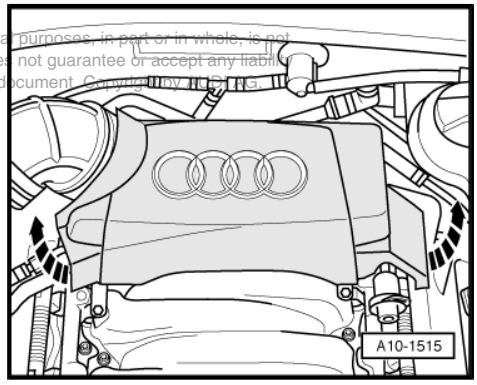

WARNING

- *The fuel system operates under high pressure. The pressure in the high-pressure part of the injection system must be reduced to a residual pressure prior to opening the system* *⇒ page 261* *.*
- *A clean cloth must then be wrapped around the connection and the residual pressure dissipated by carefully loosening the connection.*

– Disconnect fuel line -arrow-.

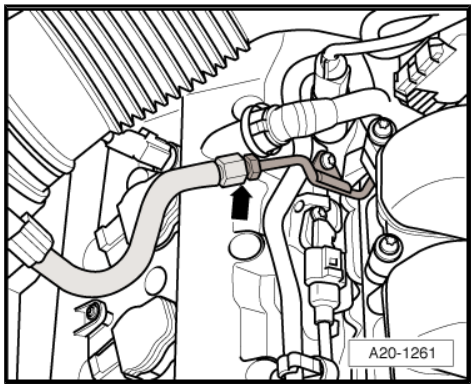

– Connect K-Jetronic pressure tester - V.A.G 1318- with adapters - V.A.G 1318/11- and -V.A.G 1318/12- to fuel pipe.
– Fit auxiliary hose -arrow- onto pressure tester and hold it in a container.
– Open cut-off valve on pressure tester. Lever points in direction of flow.
– Bleed fuel system by pressing remote control briefly.

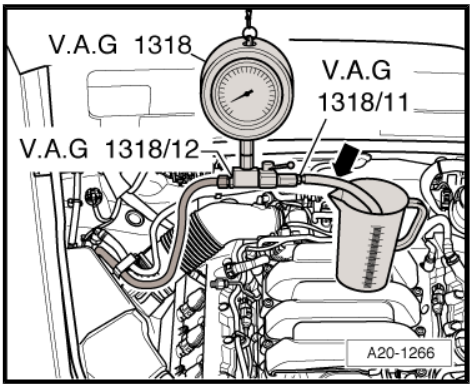

– Close cut-off valve on pressure tester. Lever is at right angle to direction of flow -arrow-.
– Press button on remote control until pressure tester shows no further increase in pressure.
• Specification: approx. 6 bar

If specification is not obtained:

– Check delivery rate of fuel pump ⇒ Rep. gr. 20 .

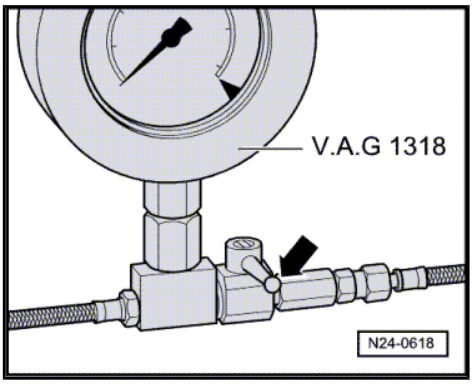

Checking residual pressure

– Check leak-tightness and residual pressure by watching the drop in pressure on the pressure gauge.
• After 10 minutes pressure should still be at least 3.75 bar.

If the residual pressure drops below 3.75 bar:

♦ Check union between pressure tester and fuel line for leaks.
♦ Check pressure tester for leaks.
♦ Check fuel lines and their connections for leaks.
♦ Renew fuel filter with integrated fuel pressure regulator ⇒ Rep. gr. 20 .
♦ Renew fuel pump ⇒ Rep. gr. 20 .

Assembly is carried out in the reverse order; note the following:

Note

Before removing the pressure tester, release the fuel pressure by opening the cut-off valve. Hold a container under the connection.

Tightening torque

Component	Nm
Fuel line to fuel rail	28

1.13 Removing and installing high-pressure pump

Special tools and workshop equipment required

- Socket, 14 mm - 3150-
- Torque wrench - V.A.G 1331-
- Ratchet - V.A.G 1331/1-
- Socket - T40055-

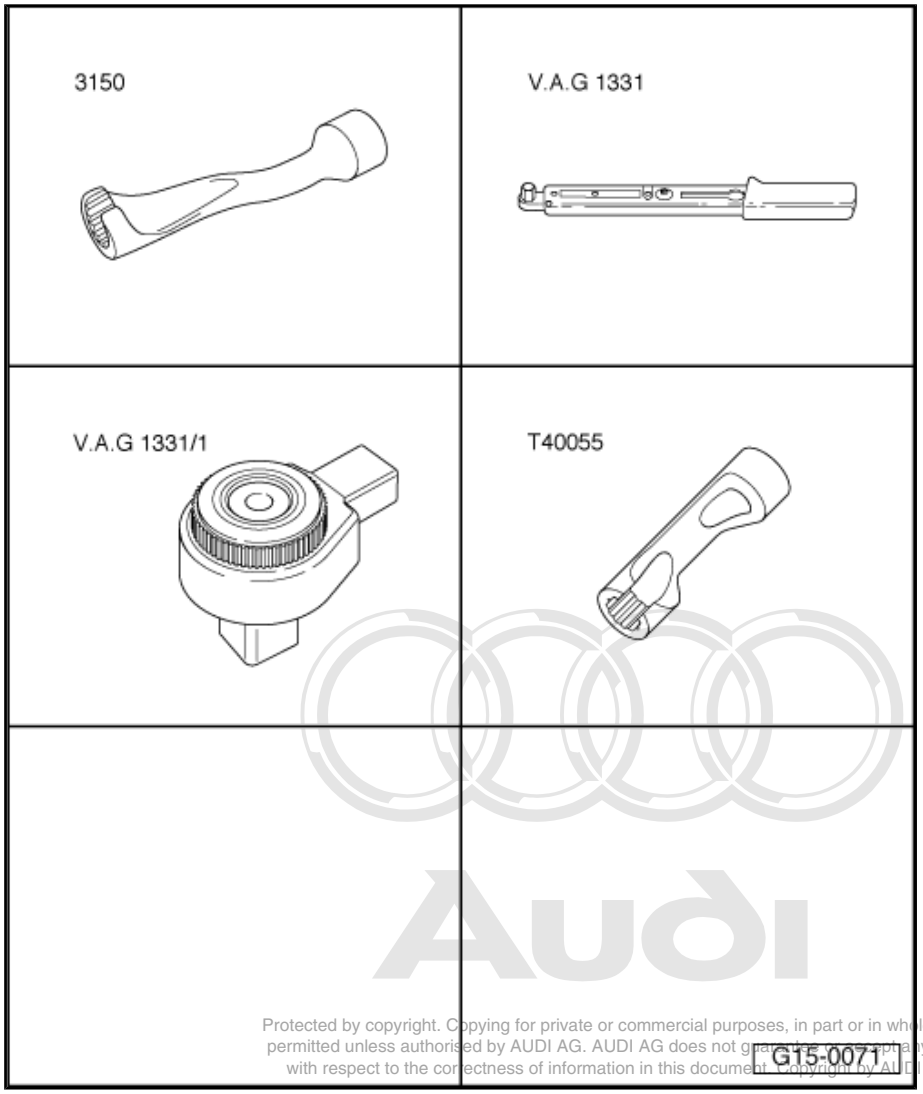

Removing

> ⚠ **WARNING**
>
> - *The fuel system operates under high pressure. The pressure in the high-pressure part of the injection system must be reduced to a residual pressure prior to opening the system* ⇒ page 261 *.*
> - *A clean cloth must then be wrapped around the connection and the residual pressure dissipated by carefully loosening the connection.*

– Drain off coolant ⇒ page 222 .

– Remove coolant pipe (front) ⇒ page 234 .

– Remove intake manifold (top section) ⇒ page 267 .

– Unscrew bolts -1 to 4- and -7-.
– Loosen union nuts -5- and -6-.

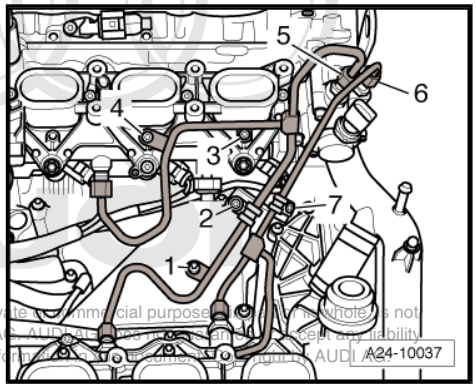

– Unbolt lifting eye -arrows-.

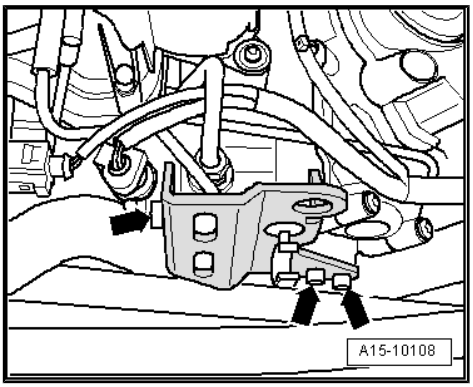

– Unplug electrical connector -2-.

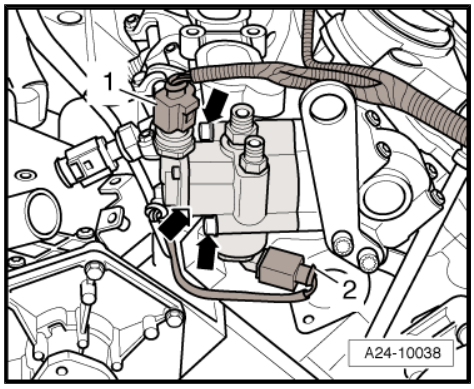

Note

Disregard -item 1-.

– Remove bolts -arrows-.
– Carefully lift high-pressure pipes.

Note

Do not bend pipes to a different shape.

– Take off high-pressure pump together with plunger.

Installing

Installation is carried out in the reverse order; note the following:

Note

Renew O-ring.

– Only lift high-pressure pipes slightly to fit the high-pressure pump.

Note

- *The connections of the high-pressure pipes must not be damaged.*
- *Do not attempt to bend high-pressure pipes to a different shape.*

– Insert high-pressure pump with plunger in cylinder head and tighten.
– Tighten union nuts on high-pressure pipes hand-tight initially.
– Ensure that high-pressure pipes are not under tension.

– To tighten union of high-pressure pipe (14 mm) at high-pressure pump, use torque wrench - V.A.G 1331- with ratchet - V.A.G 1331/1- and socket, 14 mm - 3150- .

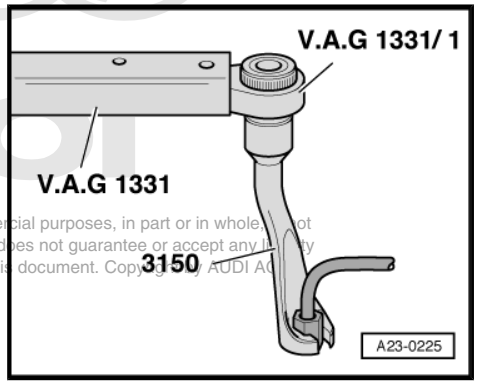

– To tighten union of high-pressure pipe (17 mm) at high-pressure pump, use torque wrench - V.A.G 1331- with ratchet - V.A.G 1331/1- and socket - T40055- .
– Install intake manifold (top section) ⇒ page 267 .
– Install coolant pipe (front) ⇒ page 234 .
– Fill cooling system ⇒ page 224 .

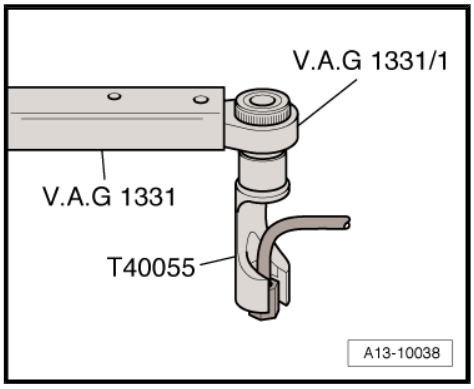

Tightening torques

Component	Nm
High-pressure pump to cylinder head	10
High-pressure pipes to high-pressure pump	25

1.14 Bleeding fuel system

In order to prevent damage to the catalytic converter, the fuel system must be bled after working on the fuel pipes or the fuel filter.

Procedure

– Start engine and let it run at moderate speed for several minutes and then switch off.

Note

To begin with, the engine may not run smoothly due to air in fuel system.

– Check fuel system for leaks.
– Interrogate event memory and erase if necessary.
– After completing the repair, road-test the vehicle. Accelerate with full throttle at least once. Then inspect fuel system for leaks again.
– Interrogate event memory and erase if necessary. If you have erased event memory, you must then generate readiness code in engine control unit in “Guided Fault Finding” mode ⇒ Vehicle diagnostic tester.

1.15 Wiring and component check with test box - V.A.G 1598/42-

Special tools and workshop equipment required

♦ Adapter cable - V.A.G 1598/39-

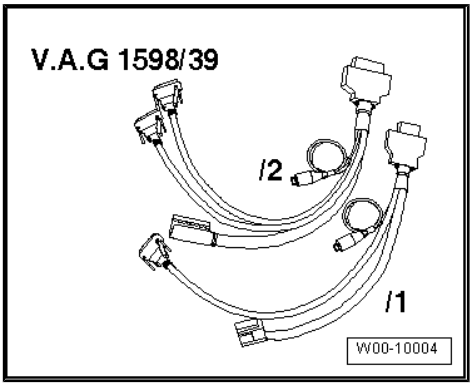

- Test box - V.A.G 1598/42-

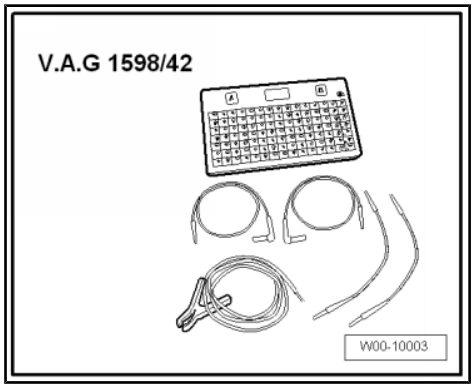

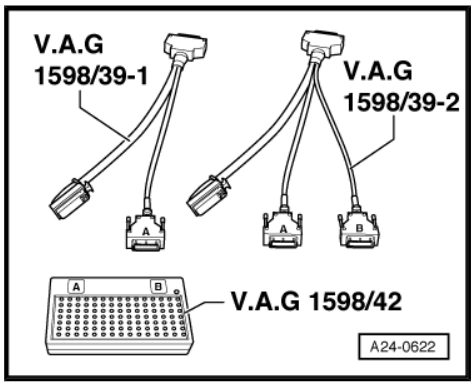

Note

- *The test box - V.A.G 1598/42- has 105 sockets. It can be connected to the engine control unit via 2 different adapter cables.*
- *The engine control unit is connected to the vehicle's wiring harness via two connectors, one of which has 60 pins, the other has 94 pins.*
- *To carry out tests on the 60-pin wiring harness connector, the adapter cable -V.A.G 1598/39-1- is connected to connector "A" on the test box. For components connected to 60-pin wiring harness connector ⇒ Current flow diagrams, Electrical fault finding and Fitting locations.*
- *To carry out tests on the 94-pin wiring harness connector, the adapter cable -V.A.G 1598/39-2- must be connected to connectors "A" and "B" on the test box. For components connected to 94-pin wiring harness connector ⇒ Current flow diagrams, Electrical fault finding and Fitting locations.*
- *The test box - V.A.G 1598/42- is designed so it can be connected both to the wiring harness for the engine control unit and to the engine control unit itself at the same time. The advantage of this is that the electronic engine control system remains fully functional when the test box is connected (for example, for measuring signals when the engine is running).*
- *The instructions for performing the individual tests indicate whether or not the engine control unit itself also needs to be connected to the test box.*
- *Always use auxiliary measuring set - V.A.G 1527B- to connect test equipment (e.g. voltage tester - V.A.G 1526 E- , hand-held multimeter - V.A.G 1594C- etc.).*

The engine control unit has to be removed before connectors can be unplugged from engine control unit ⇒ page 287 .

Caution

To prevent damage to electronic components, select appropriate measuring range before connecting measuring leads and observe test requirements.

– Connect test box - V.A.G 1598/42- to wiring harness with adapter cable - V.A.G 1598/39-1- or adapter cable -V.A.G 1598/39-2- . Connect earth clip of test box to negative terminal of battery. The instructions for performing the individual tests indicate whether or not the engine control unit itself also needs to be connected to the test box.

– Carry out test as described in relevant repair procedure.

– After completing tests re-install engine control unit ⇒ page 287 .

After re-connecting the engine control unit the following operations must be performed:

– Interrogate event memory and erase if necessary. If you have erased event memory, you must then generate readiness code in engine control unit in “Guided Fault Finding” mode.

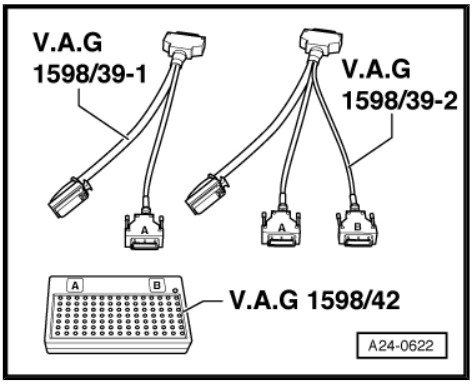

1.16 Removing and installing engine control unit

Special tools and workshop equipment required

♦ Hot air blower 220 V/ 50 Hz - VAS 1978/14- -item 1- with nozzle attachment -2- from wiring harness repair set - VAS 1978A-

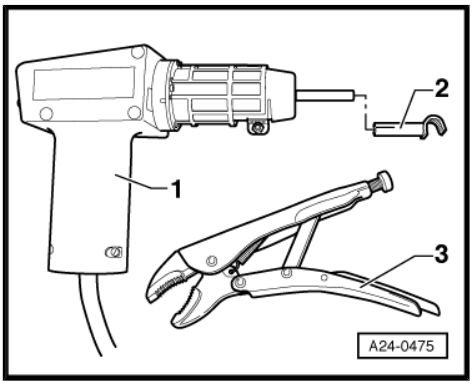

♦ Vice-grip pliers -3- (commercially available)

Note

♦ *The engine control unit -1- is bolted to the protective housing -4-. To make it more difficult to unscrew the shear bolts -3- for locking plate -2-, their threads have been coated with locking fluid.*

♦ *The protective housing has to be removed before the connectors can be unplugged from the engine control unit (e.g. to connect the test box or renew the engine control unit).*

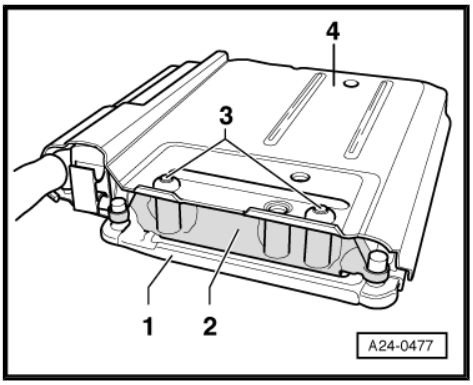

Removing

– When renewing engine control unit, select diagnosis object “Renew engine control unit” in “Guided Fault Finding” ⇒ Vehicle diagnostic tester.

– Switch off ignition and remove ignition key.

– Pull off rubber seal -1- on plenum chamber covers.
– Detach plenum chamber cover (right-side) -2-.

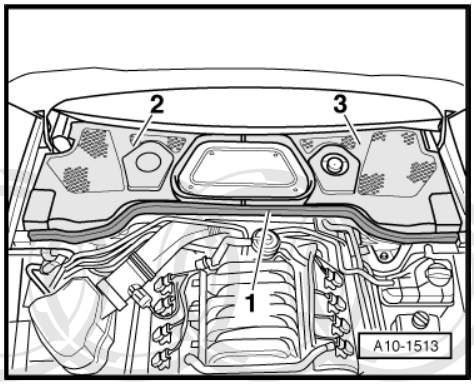

Note

Disregard -item 3-.

– Unclip cover for engine control unit.
– Remove bolts -arrows-.
– Detach both retainers and engine control unit from electronics box (plenum chamber).
– Lay aside engine control unit with electrical connectors attached.
– Disconnect 81-pin connector at engine control unit.

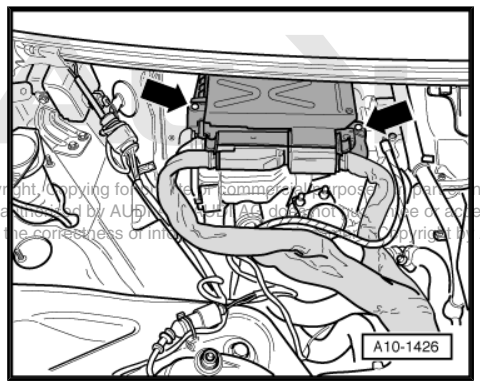

Note

- *The 60-pin connector is secured with the protective housing and remains attached when removing the engine control unit.*
- *When the multi-pin connectors are unplugged from the engine control unit, the learnt values are erased, but the contents of the event memory remain intact.*

Caution

The following procedure must be followed exactly to prevent any damage (burning) to wiring, connectors, insulation and control units. Observe operating instructions for hot air blower.

– Select settings on hot air blower as shown in illustration, i.e. set temperature potentiometer -2- to max. heat output and two-stage air flow switch -3- to position “3”.

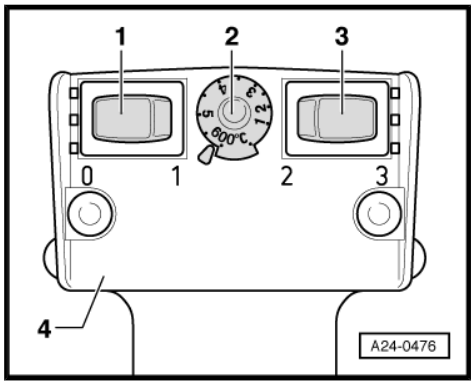

Note

Then use hot air blower to heat threaded holes in protective housing into which shear bolts have been screwed. This reduces the inhibiting action of the locking fluid on the shear bolt threads and makes it easier to unscrew these bolts.

WARNING

Parts of the protective housing will become very hot as a result of heating the shear bolts. Take care to avoid burns. Try to ensure that only the thread is heated and none of the nearby components. These should be covered if necessary.

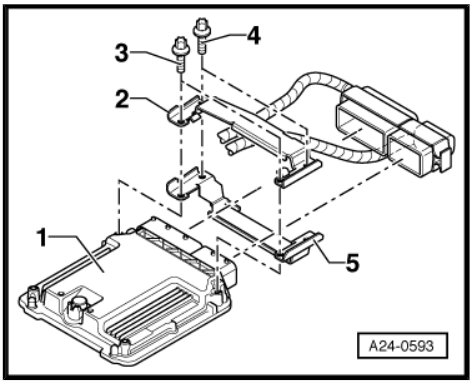

– Carry out the following operations on the two shear bolts -4- in turn.

– Direct nozzle -1- of hot air blower at shear bolt -2- of protective housing. You can rest the nozzle on the top section of the protective housing.

– Switch on the hot air blower and heat the bolt for approximately 20 ... 25 seconds.

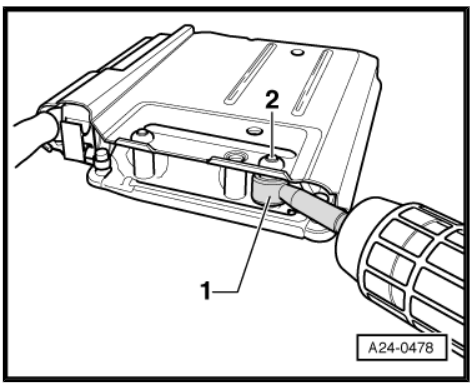

– Grasp head of bolt -2- with vice-grip pliers -1- and unscrew shear bolt -arrows-.

– Repeat the procedure for the 2nd shear bolt.

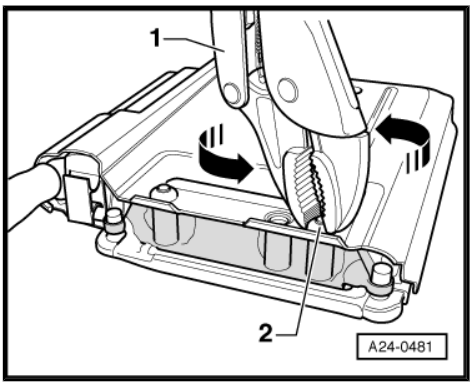

Note

Be particularly careful here, as this shear bolt is in the immediate vicinity of control unit connector.

– Release locking plate for control unit connectors.

– Release retaining tabs and unplug connectors from engine control unit.

Note

When the connectors are unplugged from the engine control unit, the learnt values are erased, but the contents of the event memory remain intact.

Installing

Installation is carried out in the reverse order; note the following:

– Reinstall the engine control unit into the protective housing.

– Clean threaded holes for shear bolts to remove any residue from locking fluid. This can be done using a thread tap.

– Use new shear bolts.

After installing a new engine control unit, the following operations must be performed:

– Activate engine control unit in “Guided Fault Finding”, “Renew engine control unit” ⇒ Vehicle diagnostic tester.

1.17 Removing and installing Lambda probe before catalytic converter - bank 1 (right)

Special tools and workshop equipment required

- Lambda probe open ring spanner set - 3337-

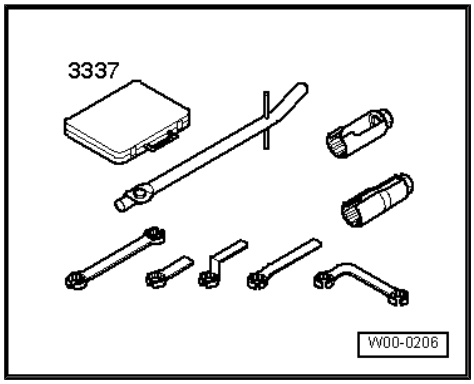

Removing

Note

All cable ties which are released or cut open when removing must be fitted in the same position when installing.

– Pull off engine cover panel (rear) -arrows-.

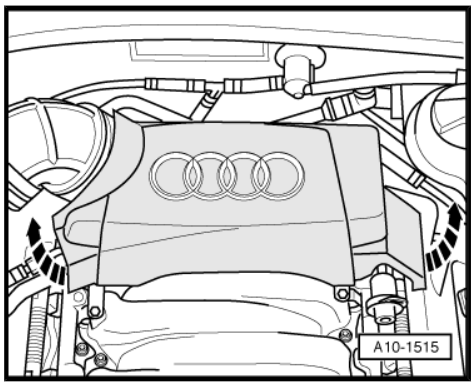

– If fitted, remove cover for suspension turret (right-side); to do so, detach spreader clips -1- and unscrew nut -2-.

– Pull cover out of retainers -arrows-.

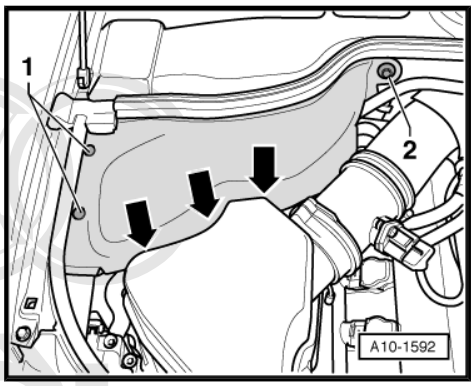

– Pull non-return valve -2- off connection at air intake hose.

– Unclip vacuum line -1- and fuel line -3- from retainer on air intake hose.

– Release hose clips -arrows- and remove air intake hose.

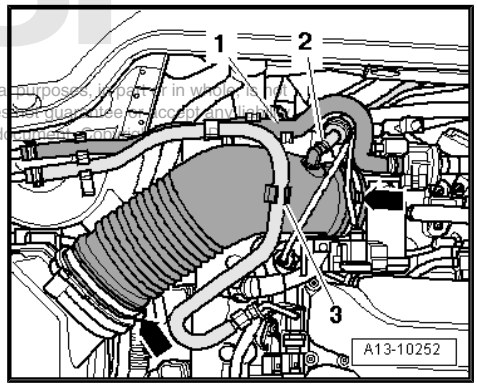

– Unplug electrical connector -1-.
– Detach vacuum hose -2-.
– Remove bolts -arrows-.
– Take out air cleaner housing.

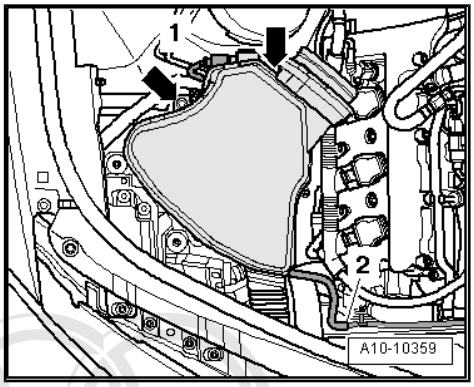

– Unplug electrical connector -2- for Lambda probe - G39- .

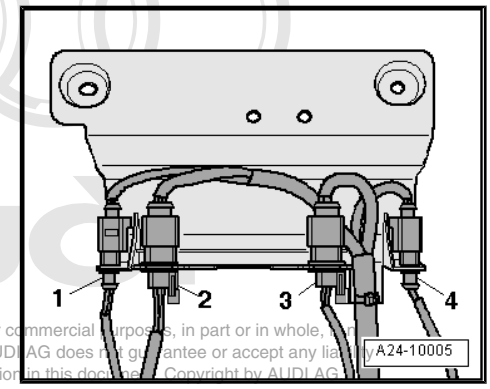

Note

Disregard -items 1, 3, 4-.

– Unscrew Lambda probe -2- using Lambda probe open ring spanner set -3337/7- .

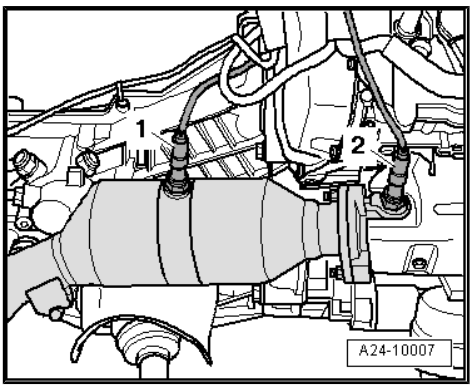

Note

Shown in illustration with engine removed.

Installing

Installation is carried out in the reverse order; note the following:

Note

- *Threads of new Lambda probes are already coated with assembly paste; the paste must not get into the slots on the probe body.*
- *If reinstalling the old Lambda probes, coat the threads with high-temperature paste ⇒ Electronic parts catalogue . The paste must not get into the slots on the Lambda probe body.*
- *Fit all cable ties in the original positions when installing.*
- *When installing, the Lambda probe wire must always be reattached at the same locations to prevent it from coming into contact with the exhaust pipe.*

Tightening torques

Component	Nm
Lambda probe in front exhaust pipe	55
Air cleaner housing to body	5
Hose clips (9 mm wide)	3

1.18 Removing and installing Lambda probe before catalytic converter - bank 2 (left)

Special tools and workshop equipment required

- Lambda probe open ring spanner set - 3337-

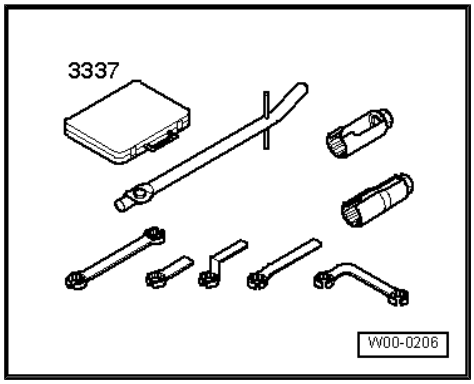

Removing

Note

All cable ties which are released or cut open when removing must be fitted in the same position when installing.

– Pull off engine cover panel (rear) -arrows-.

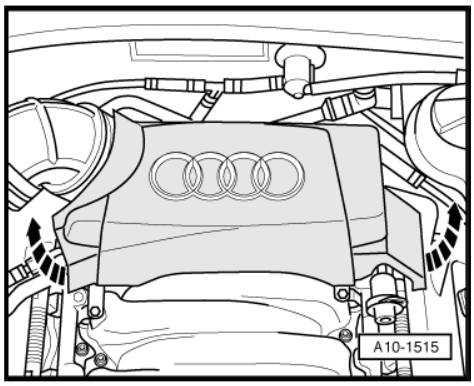

– Unscrew bolts -arrows- and unplug electrical connectors at ignition coils.

Note

Disregard items marked -1 ... 4-.

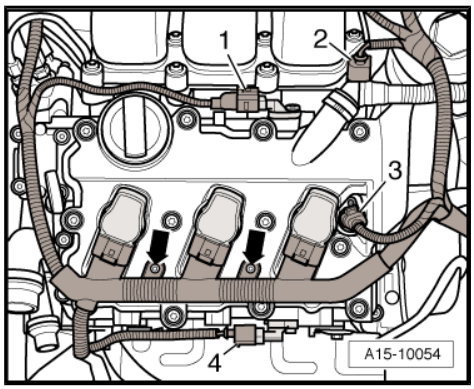

– Unplug electrical connector -3- for Lambda probe 2 - G108- and move wiring clear.

Note

Disregard -items 1, 2, 4-.

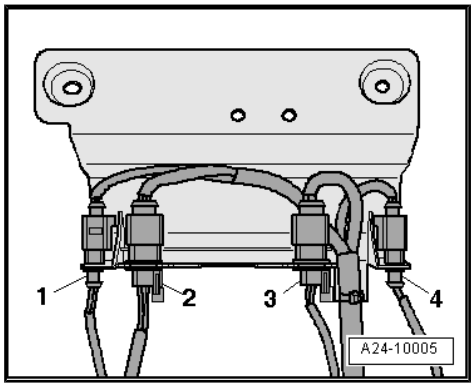

– Unscrew Lambda probe -1- using Lambda probe open ring spanner set -3337/7- .

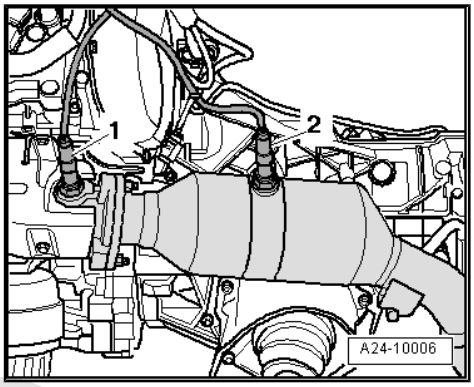

Note

Shown in illustration with engine removed.

Installing

Installation is carried out in the reverse order; note the following:

Note

- *Threads of new Lambda probes are already coated with assembly paste; the paste must not get into the slots on the probe body.*
- *If reinstalling the old Lambda probes, coat the threads with high-temperature paste ⇒ Electronic parts catalogue . The paste must not get into the slots on the Lambda probe body.*
- *Fit all cable ties in the original positions when installing.*
- *When installing, the Lambda probe wiring must always be reattached at the same locations to prevent it from coming into contact with the exhaust pipe.*

Tightening torque

Component	Nm
Lambda probe in front exhaust pipe	55

1.19 Removing and installing Lambda probe after catalytic converter - bank 1 (right)

Special tools and workshop equipment required

- Lambda probe open ring spanner set - 3337-

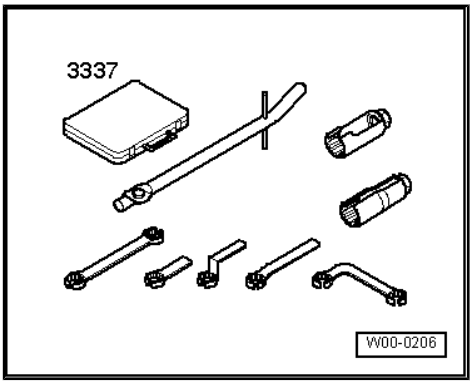

Removing

Note

All cable ties which are released or cut open when removing must be fitted in the same position when installing.

– Pull off engine cover panel (rear) -arrows-.

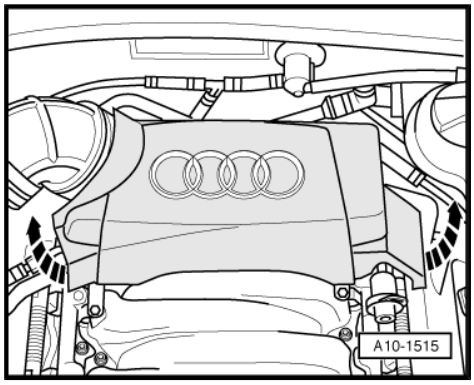

– If fitted, remove cover for suspension turret (right-side); to do so, detach spreader clips -1- and unscrew nut -2-.
– Pull cover out of retainers -arrows-.

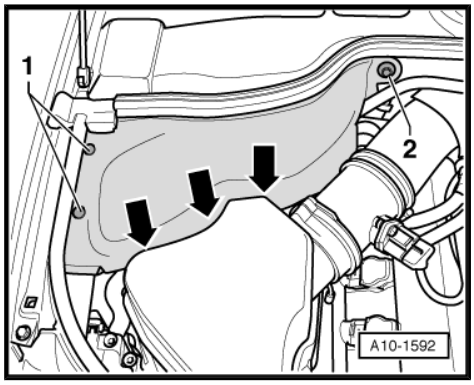

– Pull non-return valve -2- off connection at air intake hose.
– Unclip vacuum line -1- and fuel line -3- from retainer on air intake hose.
– Release hose clips -arrows- and remove air intake hose.

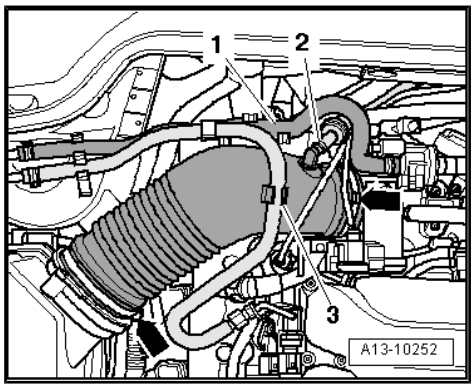

– Unplug electrical connector -1- for Lambda probe after catalytic converter - G130- and move wiring clear.

Note

Disregard -items 2, 3, 4-.

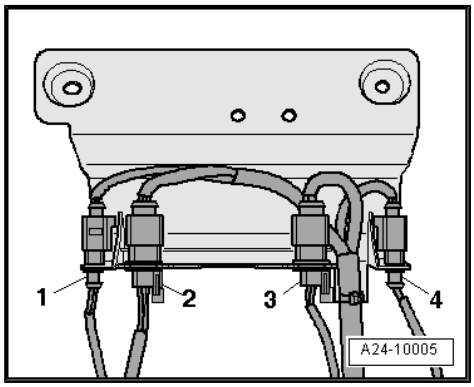

– Unscrew Lambda probe -1- using Lambda probe open ring spanner set -3337/7- .

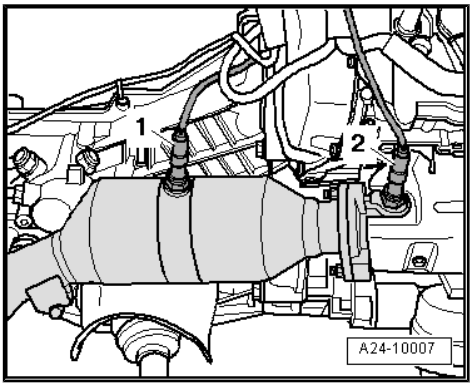

Note

Shown in illustration with engine removed.

Installing

Installation is carried out in the reverse order; note the following:

Note

- *Renew O-ring.*
- *Threads of new Lambda probes are already coated with assembly paste; the paste must not get into the slots on the probe body.*
- *If reinstalling the old Lambda probes, coat the threads with high-temperature paste ⇒ Electronic parts catalogue . The paste must not get into the slots on the Lambda probe body.*
- *Fit all cable ties in the original positions when installing.*
- *When installing, the Lambda probe wire must always be reattached at the same locations to prevent it from coming into contact with the exhaust pipe.*

Tightening torques

Component	Nm
Lambda probe in front exhaust pipe	55
Hose clips (9 mm wide)	3

1.20 Removing and installing Lambda probe after catalytic converter - bank 2 (left)

Special tools and workshop equipment required

- Lambda probe open ring spanner set - 3337-

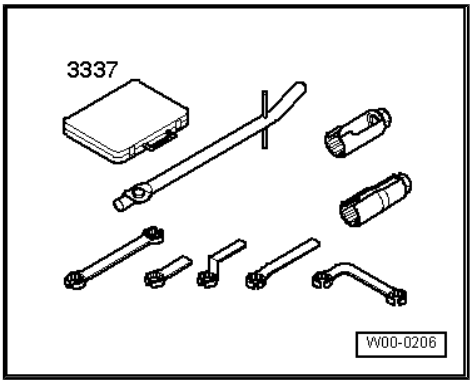

Removing

– Pull off engine cover panel (rear) -arrows-.

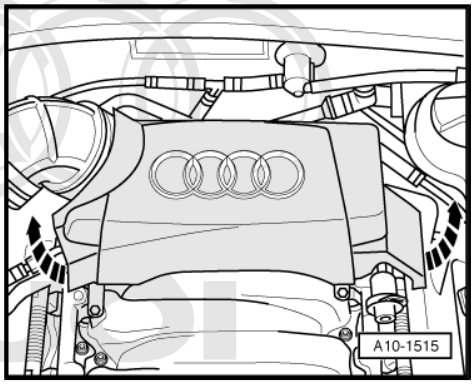

– Unplug electrical connector -4- for Lambda probe 2 after catalytic converter - G131- .

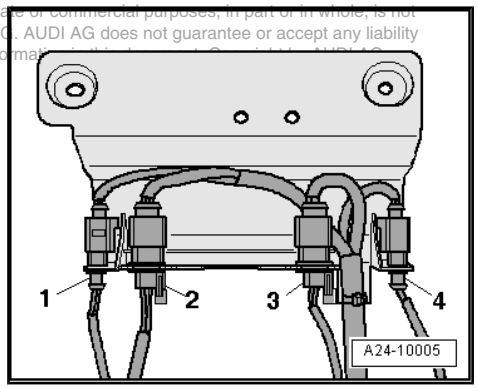

Note

Disregard -items 1, 2, 3-.

– Unscrew Lambda probe -2- using Lambda probe open ring spanner set -3337/7- .

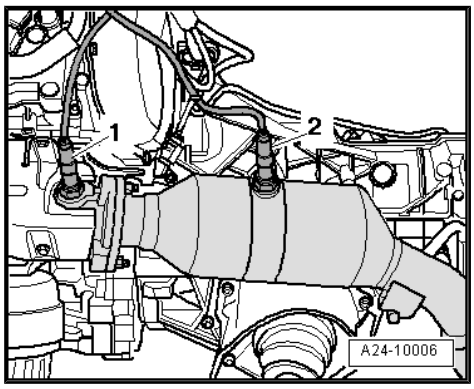

Note

Shown in illustration with engine removed.

Installing

Installation is carried out in the reverse order; note the following:

Note

- *Renew O-ring.*
- *Threads of new Lambda probes are already coated with assembly paste; the paste must not get into the slots on the probe body.*
- *If reinstalling the old Lambda probes, coat the threads with high-temperature paste ⇒ Electronic parts catalogue . The paste must not get into the slots on the Lambda probe body.*
- *When installing, the Lambda probe wire must always be reattached at the same locations to prevent it from coming into contact with the exhaust pipe.*

Tightening torque

Component	Nm
Lambda probe in front exhaust pipe	55

26 – Exhaust system

1 Removing and installing parts of exhaust system

1.1 Exhaust system - exploded view

Note

After working on the exhaust system, ensure that the system is not under stress and that it has sufficient clearance from the body. If necessary, loosen clamps and align silencers and exhaust pipes so that sufficient clearance is maintained to the body at all points and the mountings are evenly loaded.

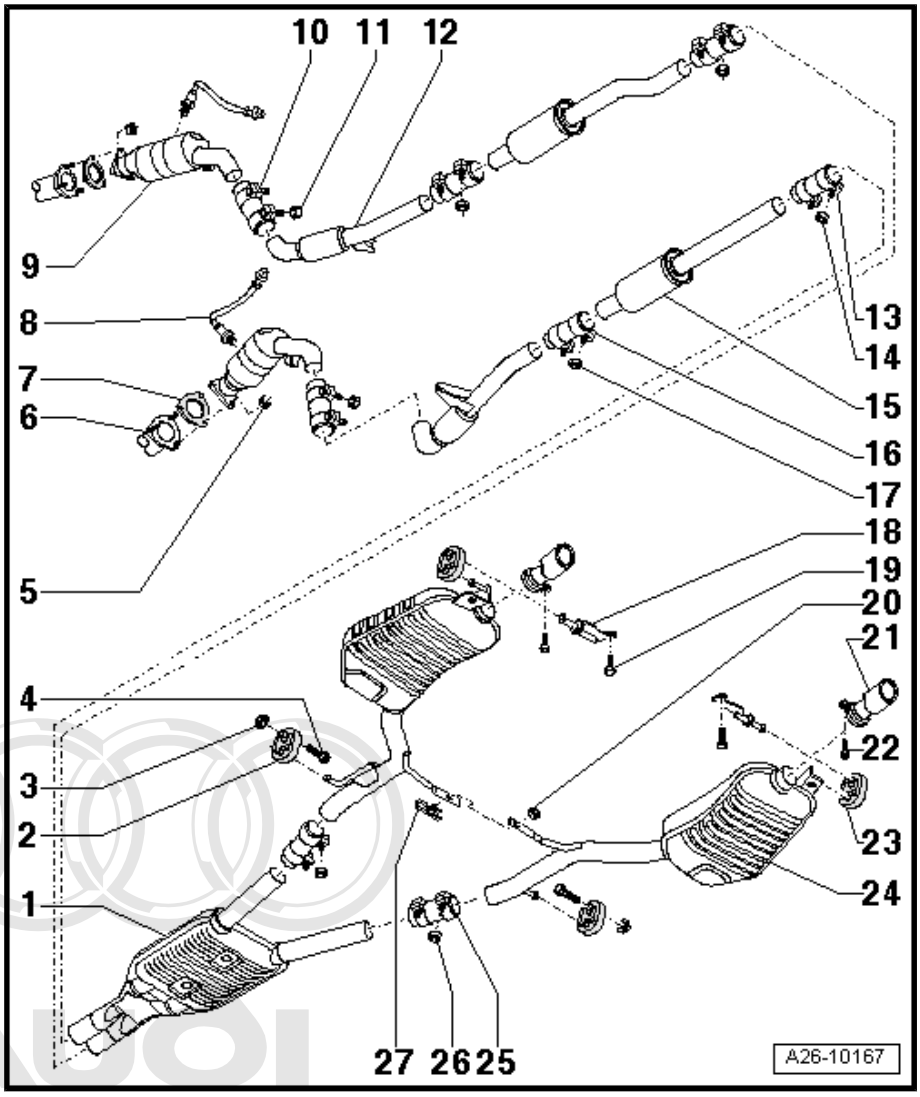

1 - Centre silencer

- ❑ Combined in one unit with rear silencer as original equipment. Can be renewed individually for repair purposes
- ❑ Cutting point ⇒ page 303
- ❑ Align exhaust system so it is free of stress ⇒ page 318

2 - Rubber mounting

- ❑ Check preload ⇒ "1.10 Stress-free alignment of exhaust system", page 318

3 - 23 Nm

4 - Bolt

5 - 27 Nm

- ❑ Renew
- ❑ Coat with high-temperature paste; for high-temperature paste refer to ⇒ Electronic parts catalogue

6 - Exhaust manifold

- ❑ Removing and installing: left-side ⇒ page 313 , right-side ⇒ page 317

7 - Gasket

- ❑ Renew

8 - Lambda probe after catalytic converter

- ❑ Threads of new Lambda probes are already greased with assembly paste; the paste must not get into the slots on the Lambda probe body
- ❑ When re-using the old Lambda probe, grease thread with high-temperature paste; the paste must not get into the slots of the Lambda probe body; high-temperature paste ⇒ Electronic parts catalogue
- ❑ Removing and installing ⇒ page 293 , ⇒ page 295

9 - Front exhaust pipe with catalytic converter

- ❑ Protect against knocks and impact
- ❑ Combined as one unit with front exhaust pipe and front silencer as original equipment; can be renewed separately as required
- ❑ Removing and installing: left-side ⇒ page 305 , right-side ⇒ page 309
- ❑ Cutting locations ⇒ page 301
- ❑ Mounting components: left-side ⇒ page 300 , right-side ⇒ page 301
- ❑ Align exhaust system so it is free of stress ⇒ page 318

10 - Clamp (top)

- ❑ To enable individual renewal of front exhaust pipe / front exhaust pipe with catalytic converter
- ❑ Position clamp so that it aligns with centre of cutting location
- ❑ Installation position: bolt connections face towards rear
- ❑ Before tightening bolt connections, align exhaust system so it is free of stress ⇒ page 318
- ❑ Tighten bolt connections evenly

11 - 23 Nm

12 - Front exhaust pipe

- With flexible joint; do not bend flexible joint more than 10° - otherwise it can be damaged
- Protect against knocks and impact
- Combined with front exhaust pipe with catalytic converter and front silencer as original equipment. Can be renewed individually for repair purposes
- Removing and installing: left-side ⇒ page 305 , right-side ⇒ page 309
- Cutting locations: front exhaust pipe/catalytic converter ⇒ page 301 , front silencer ⇒ page 302
- Mounting components: left-side ⇒ page 300 , right-side ⇒ page 301
- Align exhaust system so it is free of stress ⇒ page 318

13 - Clamp (centre)

- Position clamp so that it aligns with centre of cutting location
- Installation position ⇒ page 300
- Before tightening bolt connections, align exhaust system so it is free of stress ⇒ page 318
- Tighten bolt connections evenly

14 - 23 Nm

15 - Front silencer

- Combined as one unit with front exhaust pipe / catalytic converter and front exhaust pipe as original equipment; can be renewed separately as required
- Removing and installing: left-side ⇒ page 305 , right-side ⇒ page 309
- Cutting locations ⇒ page 301
- Align exhaust system so it is free of stress ⇒ page 318

16 - Clamp (front)

- To enable individual renewal of front exhaust pipe and front silencer
- Position clamp so that it aligns with centre of cutting location
- Installation position ⇒ page 300
- Before tightening bolt connections, align exhaust system so it is free of stress ⇒ page 318
- Tighten bolt connections evenly

17 - 23 Nm

18 - Mounting

19 - 22 Nm

20 - 23 Nm

- Renew

21 - Tailpipe

- Check preload ⇒ “1.10 Stress-free alignment of exhaust system”, page 318

22 - 23 Nm

23 - Rubber mounting

- Check preload ⇒ “1.10 Stress-free alignment of exhaust system”, page 318

24 - Rear silencer

- Combined in one unit with centre silencer as original equipment. Can be renewed individually for repair purposes
- Cutting point ⇒ page 303
- Align exhaust system so it is free of stress ⇒ page 318

25 - Clamp (rear)

- For separate replacement of centre and rear silencers
- Position clamp so that it aligns with centre of cutting location
- Installation position ⇒ page 300
- Before tightening bolt connections, align exhaust system so it is free of stress ⇒ page 318

❑ Tighten bolt connections evenly

26 - 23 Nm

27 - Connecting bracket

Installation position of front and centre clamps

– Fit clamps so that ends of bolts do not protrude beyond bottom of clamp.

• Bolt connections face outwards.

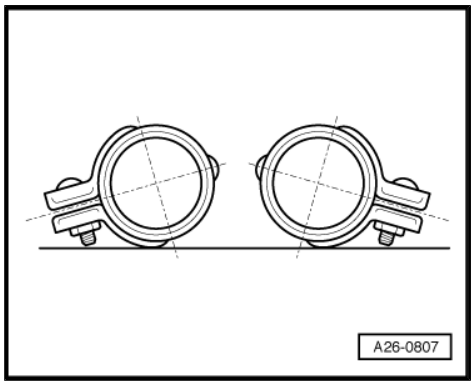

Installation position of rear clamps

– Fit clamps so that ends of bolts do not protrude beyond bottom of clamps.

• Bolt connections face one another.

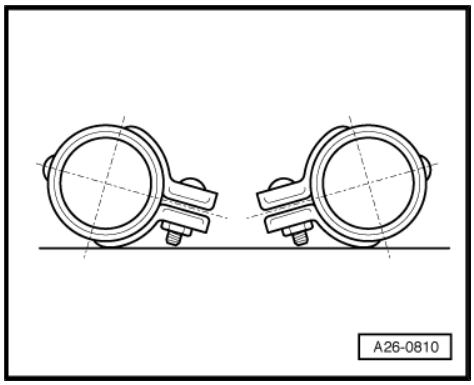

Components of exhaust pipe mountings (left-side) for vehicles with front-wheel drive and vehicles with four-wheel drive

1 - Bolt, 25 Nm

2 - Washer

3 - Compression spring

4 - Spacer sleeve

5 - Spacer sleeve

6 - Bracket

7 - Buffer

8 - Spacer sleeve

9 - Bolt, 25 Nm

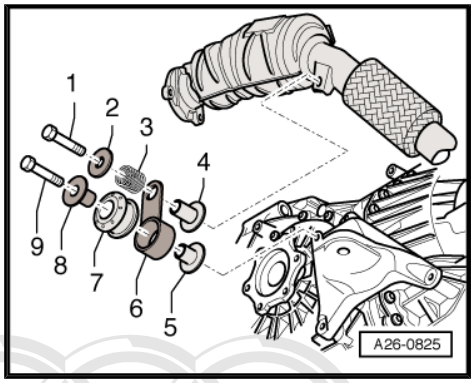

Components of exhaust pipe mountings (right-side) for vehicles with front-wheel drive and vehicles with four-wheel drive

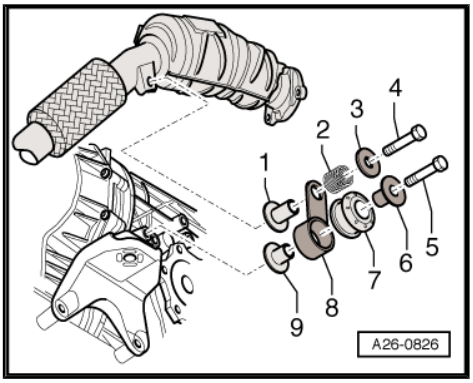

1 - Spacer sleeve
2 - Compression spring
3 - Washer
4 - Bolt, 25 Nm
5 - Bolt, 25 Nm
6 - Spacer sleeve
7 - Buffer
8 - Bracket
9 - Spacer sleeve

Centre mounting components on vehicles with front-wheel drive

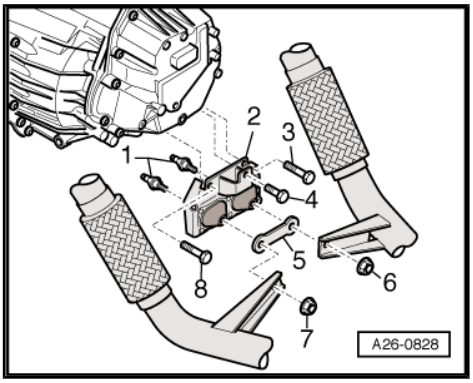

1 - Studs
2 - Bracket
3 - Bolt, 25 Nm
4 - Bolt, 25 Nm
5 - Bracket
6 - Nut, self-locking, 25 Nm
7 - Nut, self-locking, 25 Nm
8 - Bolt, 25 Nm

Centre mounting components on vehicles with four-wheel drive

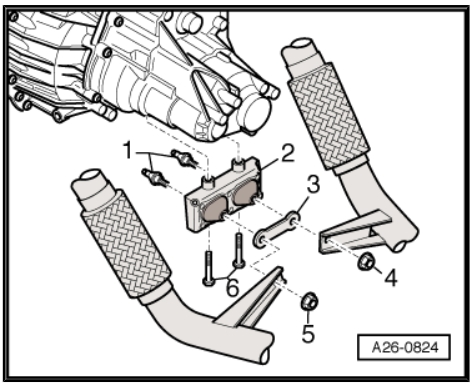

1 - Studs
2 - Bracket
3 - Bracket
4 - Nut, self-locking, 25 Nm
5 - Nut, self-locking, 25 Nm
6 - Bolts, 25 Nm

1.2 Separating front exhaust pipe with catalytic converter from front exhaust pipe

- The connecting pipe can be cut through at the point marked so that the front exhaust pipe with catalytic converter / front exhaust pipe can be renewed separately.
- The cutting point is marked by an indentation on the circumference of the exhaust pipe.

Special tools and workshop equipment required

♦ Chain pipe cutter - VAS 6254-

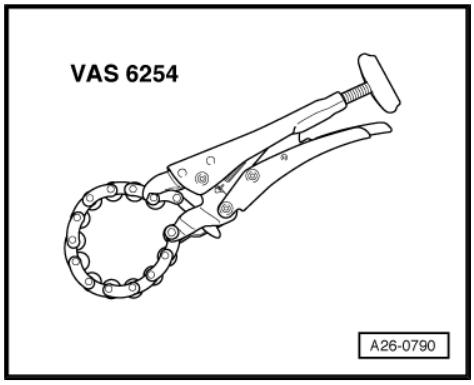

Procedure

– Remove front exhaust pipe together with catalytic converter: left-side ⇒ page 305 , right-side ⇒ page 309 .

– Cut through exhaust pipe at a right angle at cutting point -arrow- using chain-type pipe cutter - VAS 6254- .

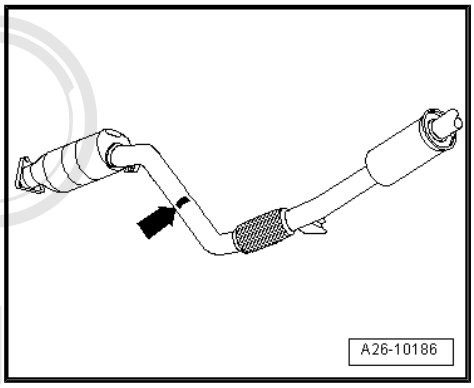

– When reassembling, position the clamp -arrow- centrally over the cutting point.

– Install clamp with bolts pointing towards rear.

– Align exhaust system so it is free of stress ⇒ page 318 .

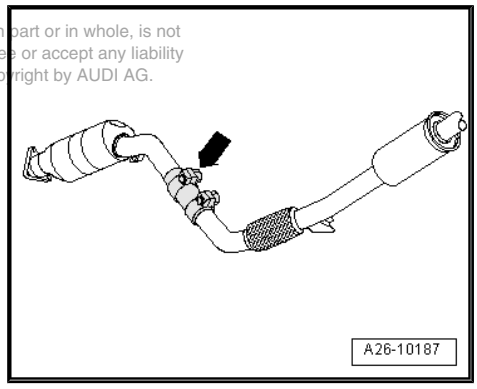

1.3 Separating front exhaust pipe and front silencer

♦ The connecting pipe can be cut through at the point marked so that the front exhaust pipe and front silencer can be renewed separately.

♦ The cutting point is marked by an indentation on the circumference of the exhaust pipe.

Special tools and workshop equipment required

♦ Chain pipe cutter - VAS 6254-

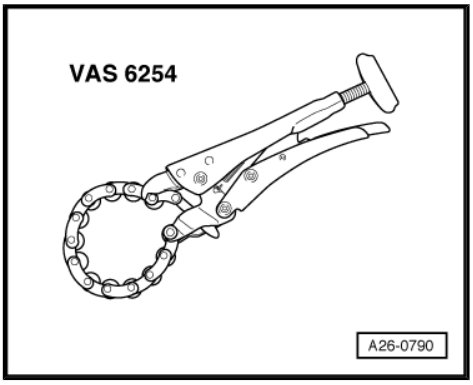

Procedure

– Cut through exhaust pipes at a right angle at cutting point -arrows- using chain pipe cutter - VAS 6254- .

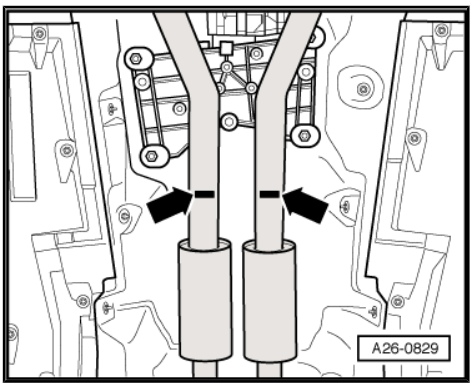

– When reassembling, position the clamps -arrows- centrally over the cutting point.

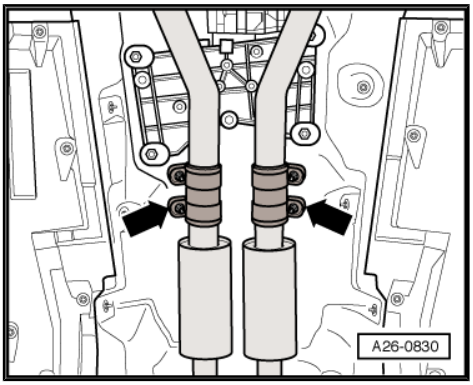

– Fit clamps so that ends of bolts do not protrude beyond bottom of clamps.

• Bolt connections face outwards.

– Align exhaust system so it is free of stress ⇒ page 318 .

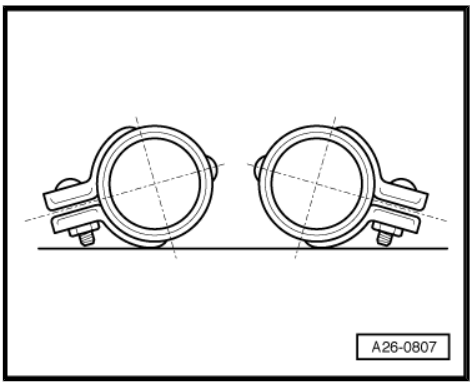

1.4 Separating centre and rear silencers

The connecting pipe can be cut through at the cutting point provided in order to renew the centre and rear silencers separately.

The cutting point is marked by an indentation on the circumference of the exhaust pipe.

Special tools and workshop equipment required

♦ Chain pipe cutter - VAS 6254-

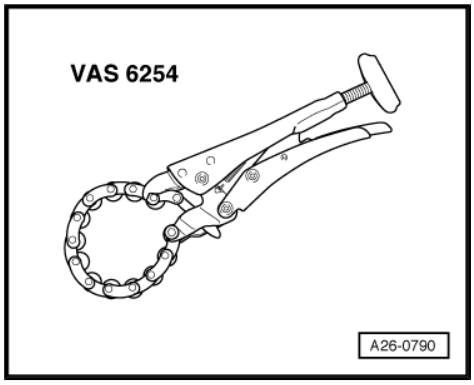

Procedure

– Cut through exhaust pipes at a right angle at cutting point -arrows- using chain pipe cutter - VAS 6254- .

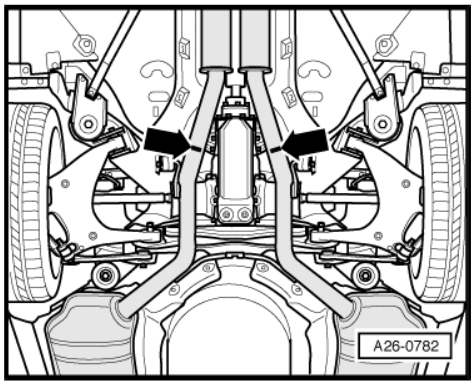

– When reassembling, position the clamps -arrows- centrally over the cutting point.

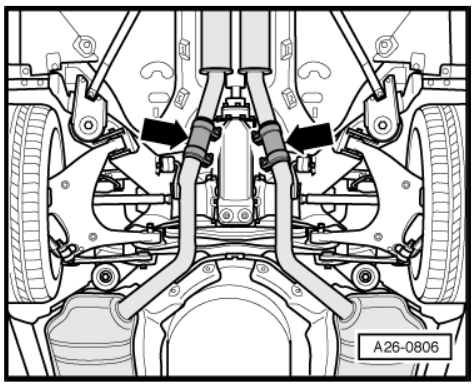

– Fit clamps so that ends of bolts do not protrude beyond bottom of clamps.

• Bolted connections face inwards.

– Align exhaust system so it is free of stress ⇒ page 318 .

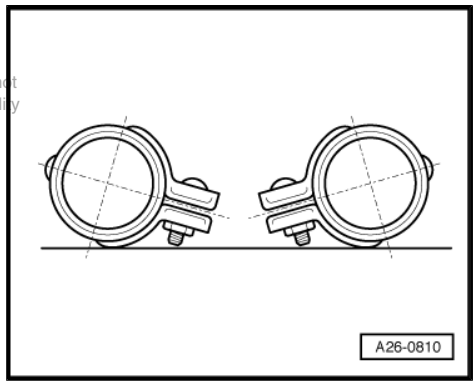

1.5 Removing and installing front exhaust pipe (left-side) with catalytic converter

Removing

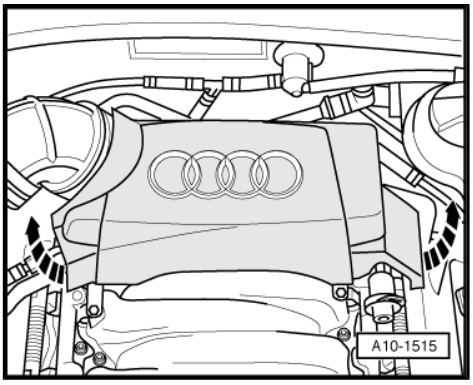

Note

All cable ties which are released or cut open when removing must be fitted in the same position when installing.

– Pull off engine cover panel (rear) -arrows-.

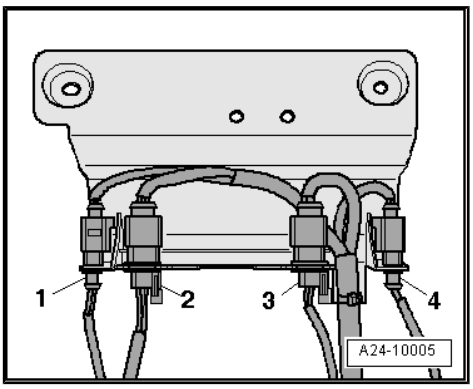

– Unplug electrical connector -4- for Lambda probe 2 after catalytic converter - G131- and move wiring clear (downwards).

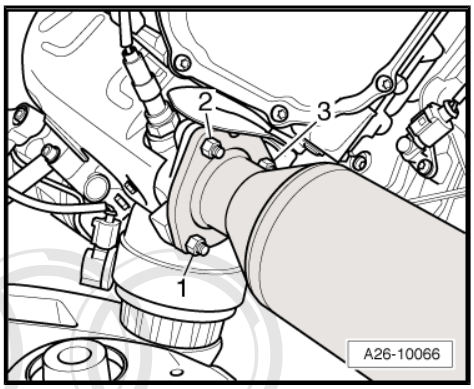

– Unscrew nut -2- (accessible from above) connecting front exhaust pipe to exhaust manifold.

Note

Shown from rear with engine removed for illustration purposes.

– Remove front left wheel.

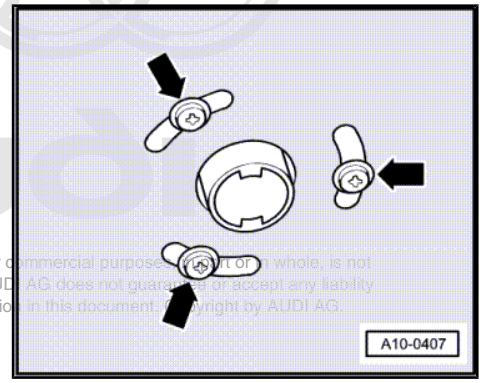

Note

Secure brake disc with wheel bolts.

– If fitted, remove bolts -arrows- securing exhaust pipe for auxiliary/additional heater to noise insulation.

– Release quick-release fasteners -1- and -2- and take off noise insulation.

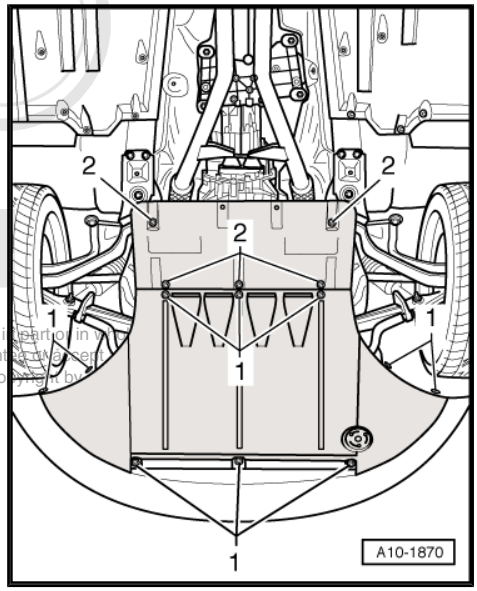

– Remove noise insulation in left-side wheel housing -arrows-.

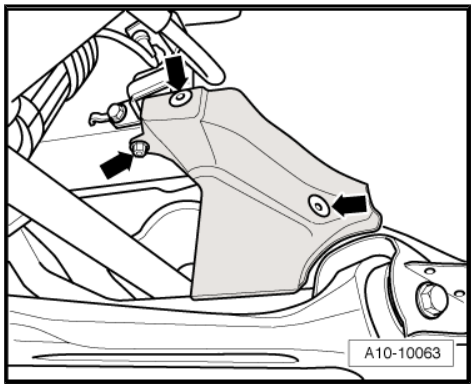

– Remove bolts -1- and -2-.
– Detach bracket for front exhaust pipe.

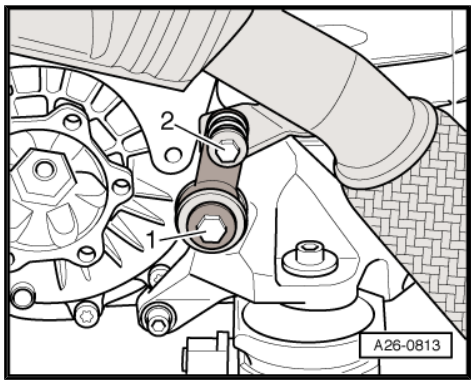

– Unbolt cross piece (front) -arrows-.

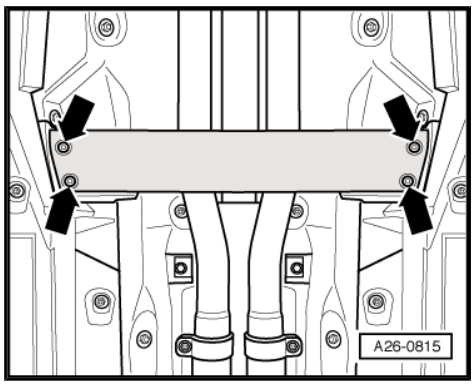

– Disconnect exhaust system at clamp (left-side) -1-.

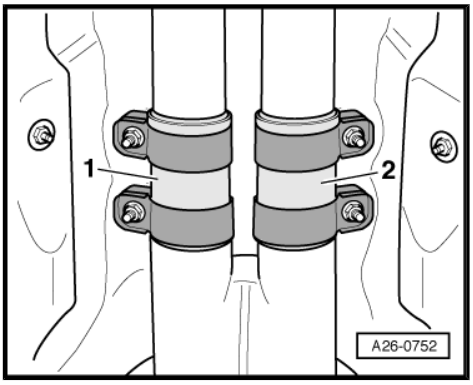

Note

To avoid any damage, the flexible joint in the front exhaust pipe must not be bent more than 10°.

– Unscrew nut -left arrow- at mounting bracket for front exhaust pipe (left-side).

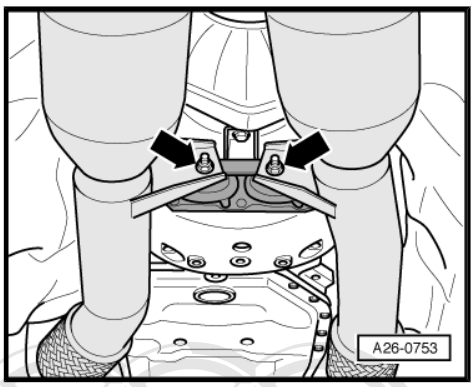

– Move Lambda probe cable clear.

– Unscrew nuts -1- and -3- (accessible from below) connecting front exhaust pipe to exhaust manifold.

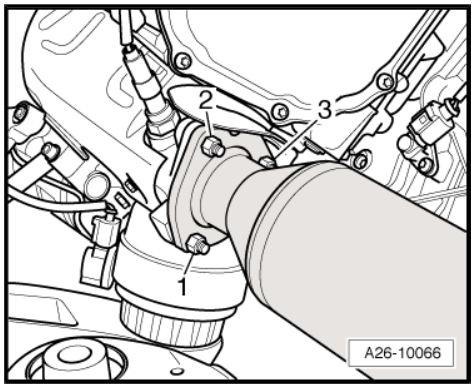

Note

Shown in illustration with engine removed.

– Remove front exhaust pipe with catalytic converter.

Installing

Installation is carried out in the reverse order; note the following:

Note

- *Renew gaskets and self-locking nuts.*
- *Fit all cable ties in the original positions when installing.*
- *When installing, the Lambda probe wire must always be reattached at the same locations to prevent it from coming into contact with the exhaust pipe.*

– Install cross piece for subframe ⇒ Rep. gr. 40 .

– Install cross piece (front) ⇒ Rep. gr. 50 .

– Align exhaust system so it is free of stress ⇒ page 318 .

Note

Components of exhaust pipe mountings: mounting (left-side) ⇒ page 300 , centre mounting for vehicles with front-wheel drive ⇒ page 301 , centre mounting for vehicles with four-wheel drive ⇒ page 301 .

Tightening torques

Component	Nm
Front exhaust pipe with catalytic converter to exhaust manifold	27 [1)2)]
Mounting plate to front exhaust pipe	25
Mounting bracket to gearbox support	25
Front exhaust pipe to gearbox bracket	25 [1)]

- [1)] Renew nuts.
- [2)] Grease with high-temperature paste; refer to ⇒ Electronic parts catalogue for high-temperature paste

1.6 Removing and installing front exhaust pipe (right-side) with catalytic converter

Removing

Note

All cable ties which are released or cut open when removing must be fitted in the same position when installing.

– Pull off engine cover panel (rear) -arrows-.

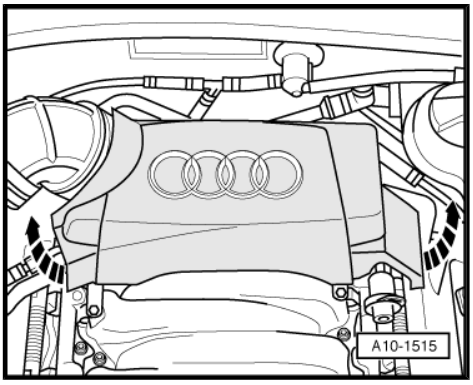

– Pull non-return valve -2- off connection at air intake hose.
– Unclip vacuum line -1- and fuel line -3- from retainer on air intake hose.
– Release hose clips -arrows- and remove air intake hose.

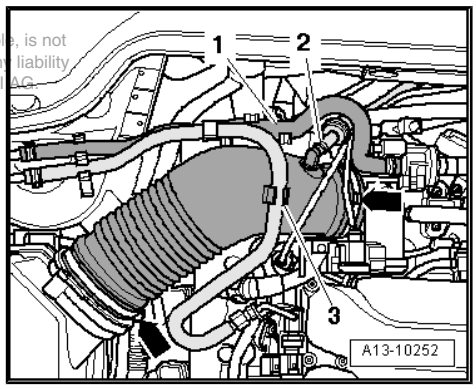

– Unplug electrical connector -1-.
– Detach vacuum hose -2-.
– Remove bolts -arrows-.
– Take out air cleaner housing.

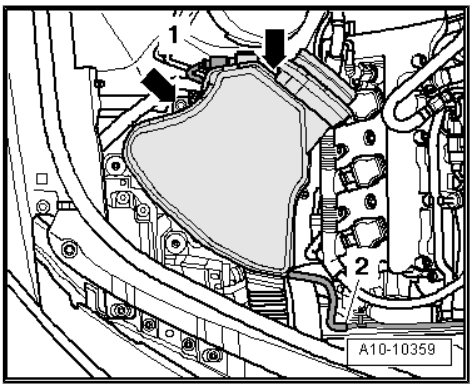

– Unplug electrical connector -1- for Lambda probe after catalytic converter - G130- and move wiring clear (downwards).

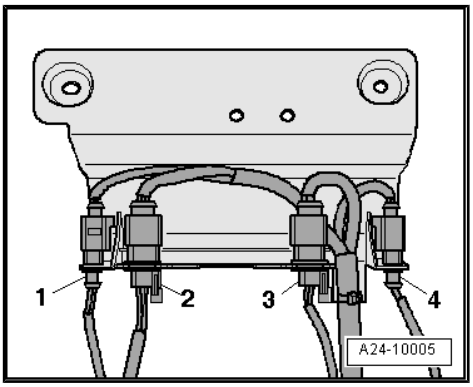

– Unscrew nut -2- (accessible from above) connecting front exhaust pipe to exhaust manifold.

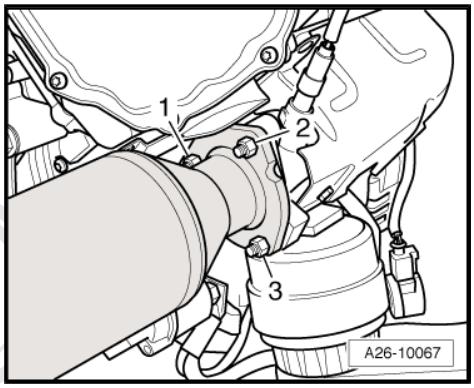

– Remove front right wheel.

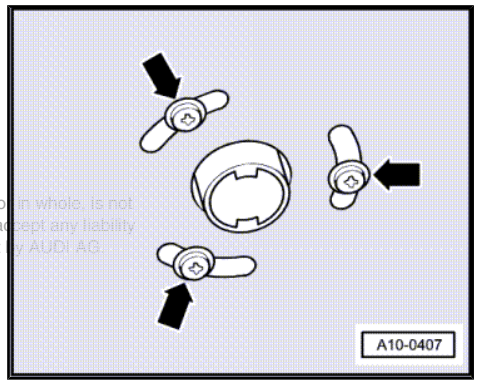

Note

Secure brake disc with wheel bolts.

– If fitted, remove bolts -arrows- securing exhaust pipe for auxiliary/additional heater to noise insulation.

– Release quick-release fasteners -1- and -2- and take off noise insulation.

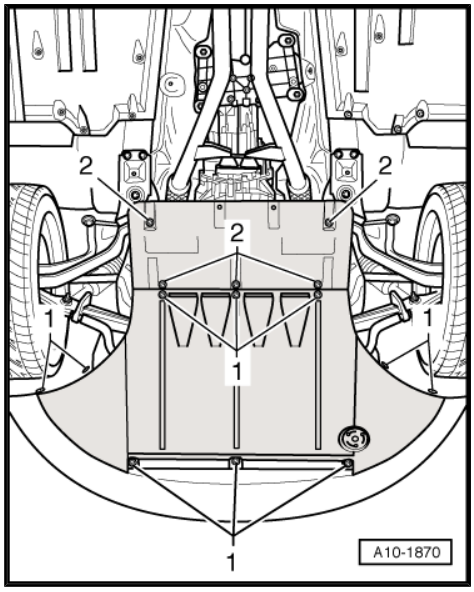

– Remove noise insulation in wheel housing (right-side) -arrows-.

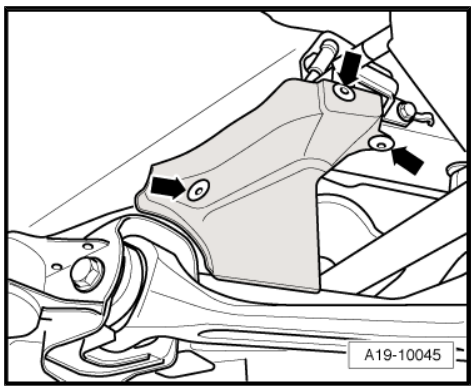

– Remove bolts -1- and -2- on bracket (right-side) for front exhaust pipe.

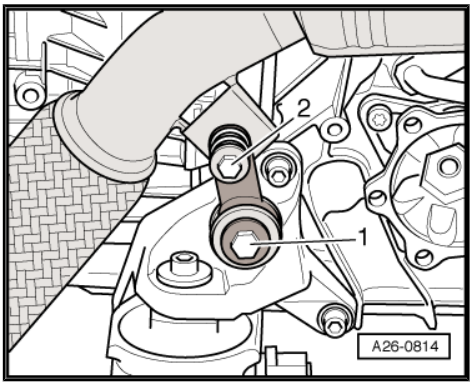

– Unbolt cross piece (front) -arrows-.

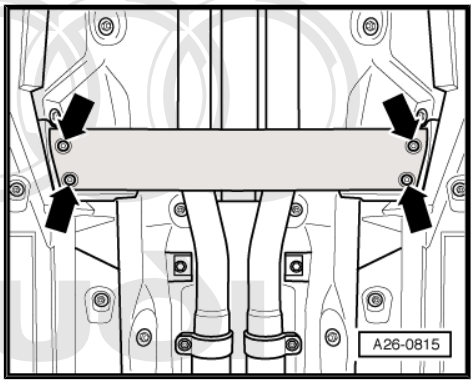

– Disconnect exhaust system at clamp (right-side) -2-.

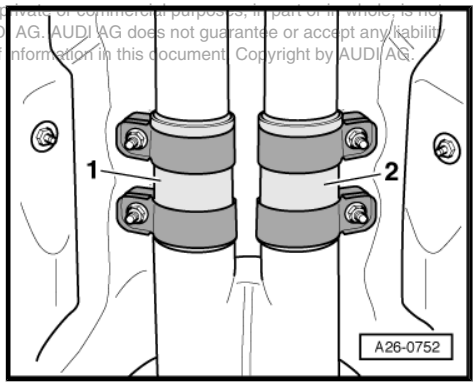

Note

To avoid any damage, the flexible joint in the front exhaust pipe must not be bent more than 10°.

– Unscrew nut -right arrow- at mounting bracket for front exhaust pipe (right-side).

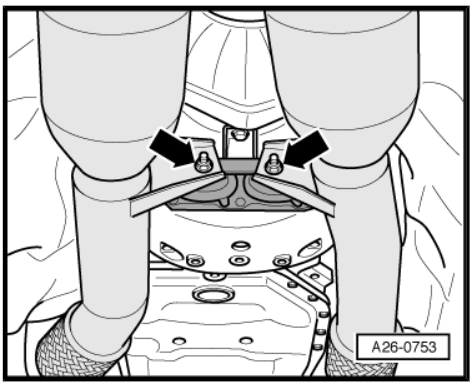

– Move Lambda probe cable clear.

– Unscrew nuts -1- and -3- (accessible from below) connecting front exhaust pipe to exhaust manifold.

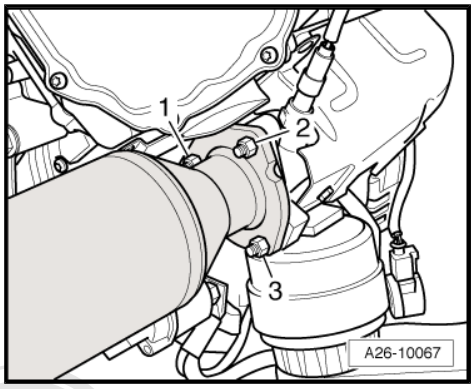

Note

Shown in illustration with engine removed.

– Remove front exhaust pipe with catalytic converter.

Installing

Installation is carried out in the reverse order; note the following:

Note

- *Renew gaskets and self-locking nuts.*
- *Fit all cable ties in the original positions when installing.*
- *When installing, the Lambda probe wire must always be reattached at the same locations to prevent it from coming into contact with the exhaust pipe.*

– Install cross piece for subframe ⇒ Rep. gr. 40 .

– Install cross piece (front) ⇒ Rep. gr. 50 .

– Align exhaust system so it is free of stress ⇒ page 318 .

Note

Components of exhaust pipe mountings: mounting (right-side) ⇒ page 301 , centre mounting for vehicles with front-wheel drive ⇒ page 301 , centre mounting for vehicles with four-wheel drive ⇒ page 301 .

Tightening torques

Component	Nm
Front exhaust pipe with catalytic converter to exhaust manifold	27 1) 2)
Mounting plate to front exhaust pipe	25
Mounting bracket to gearbox support	25
Front exhaust pipe to gearbox bracket	25 1)
Hose clips (9 mm wide)	3

- 1) Renew nuts.
- 2) Grease with high-temperature paste; refer to ⇒ Electronic parts catalogue for high-temperature paste

1.7 Exhaust manifold - exploded view

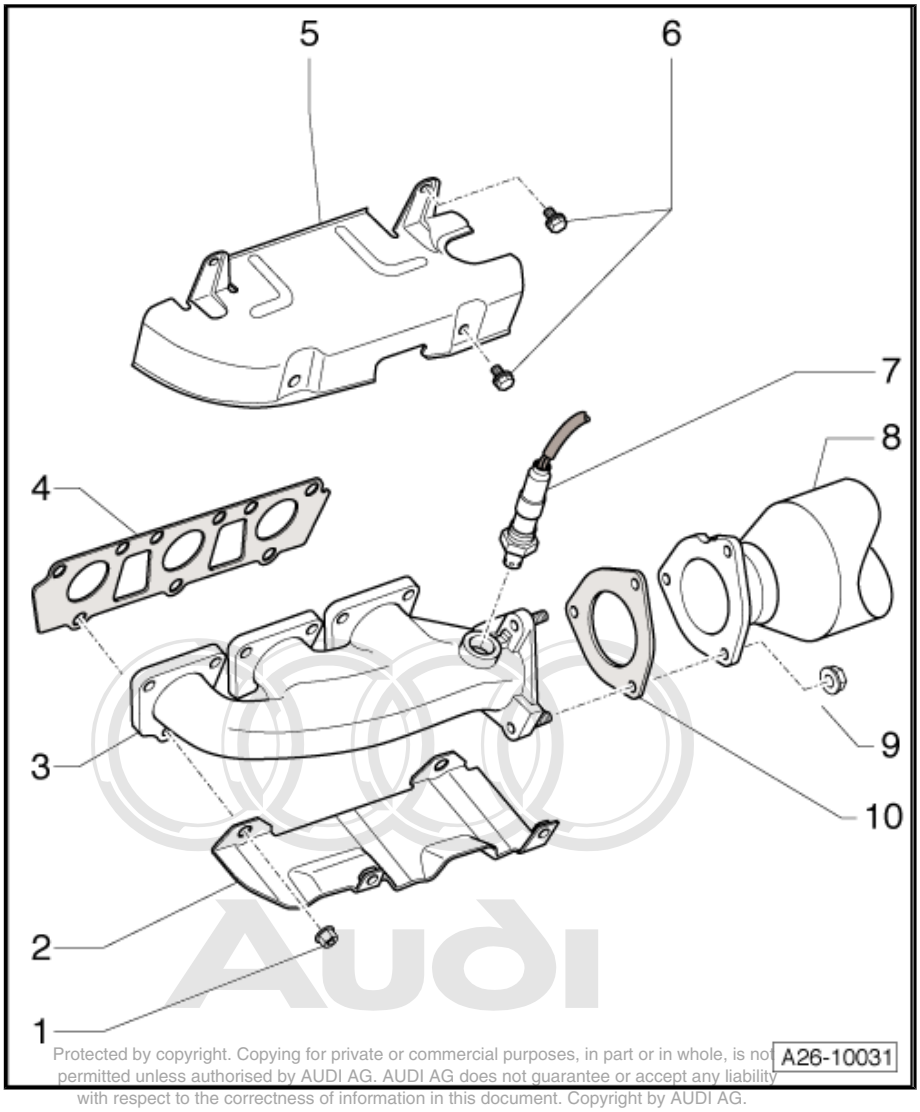

1 - 25 Nm

- ❑ Renew
- ❑ Coat with high-temperature paste; for high-temperature paste refer to ⇒ Electronic parts catalogue
- ❑ Note tightening sequence ⇒ page 317 and ⇒ page 318

2 - Bracket for heat shield

3 - Exhaust manifold

- ❑ Removing and installing: left-side ⇒ page 313 , right-side ⇒ page 317

4 - Gasket

- ❑ Renew

5 - Heat shield

6 - 10 Nm

7 - Lambda probe, 55 Nm

- ❑ Before catalytic converter
- ❑ Threads of new Lambda probes are already greased with assembly paste; the paste must not get into the slots on the Lambda probe body
- ❑ When re-using the old Lambda probe, grease thread with high-temperature paste; the paste must not get into the slots of the Lambda probe body. High-temperature paste ⇒ Electronic parts catalogue

8 - Front exhaust pipe

- ❑ For cylinder bank 2 (left-side)
- ❑ With flexible joint; do not bend flexible joint more than 10° - otherwise it can be damaged
- ❑ Protect against knocks and impact
- ❑ Removing and installing ⇒ page 305
- ❑ Mounting components ⇒ page 300
- ❑ Align exhaust system so it is free of stress ⇒ page 318

9 - 27 Nm

- ❑ Renew
- ❑ Coat with high-temperature paste; for high-temperature paste refer to ⇒ Electronic parts catalogue

10 - Gasket

- ❑ Renew

1.8 Removing and installing exhaust manifold (left-side)

Special tools and workshop equipment required

♦ Used oil collection and extraction unit - V.A.G 1782-

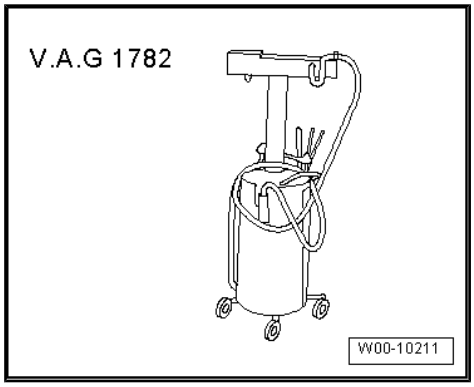

Removing

– Remove front exhaust pipe (left-side) together with catalytic converter ⇒ page 305 .

– Unplug electrical connector -3- for Lambda probe 2 - G108- and move wiring clear.

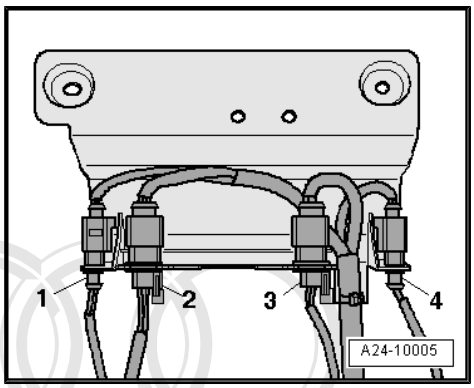

– Pull off engine cover panel (front) -arrows-.

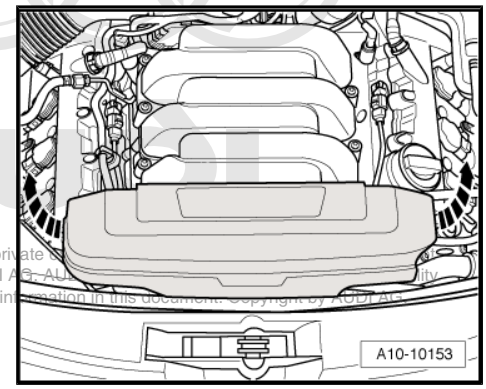

– Unscrew bolts -arrows- and unplug electrical connectors at ignition coils.

– Unplug electrical connectors -3- and -4- and move wiring clear.

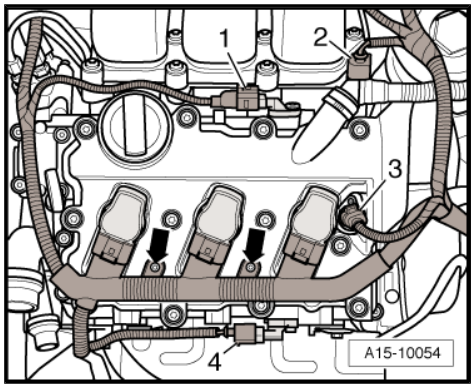

Note

Disregard items -1- and -2-.

– Remove engine compartment seal from lock carrier and wing panel flanges.

Note

Before removing, mark direction of rotation of poly V-belt with chalk or felt-tip pen. If the belt runs in the opposite direction when it is refitted, this can cause breakage.

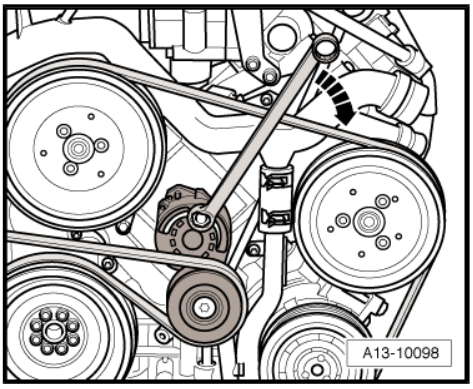

- Turn the tensioner in the direction of the -arrow- to slacken the poly V-belt.
- Remove poly V-belt from pulley for AC compressor.
- Release pressure from the tensioner.

- Remove bolts -1- and -2-.

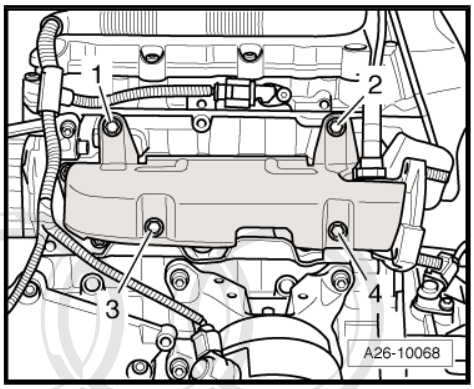

- Place used oil collection and extraction unit - V.A.G 1782- under engine.
- Unscrew bolts -arrows- and detach engine oil cooler with coolant hoses -1- and -2- attached.

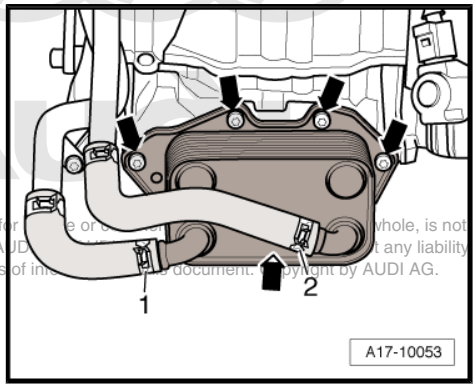

- Unplug electrical connector -arrow- at engine mounting (left-side).

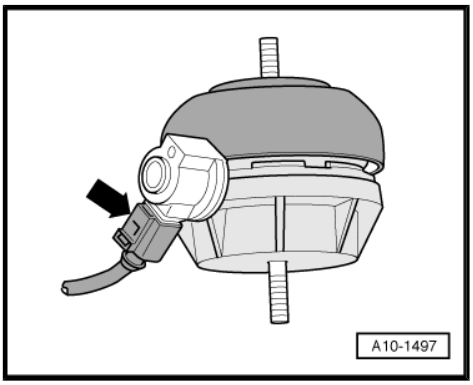

– Unplug electrical connector -1- for magnetic clutch on air conditioner compressor.

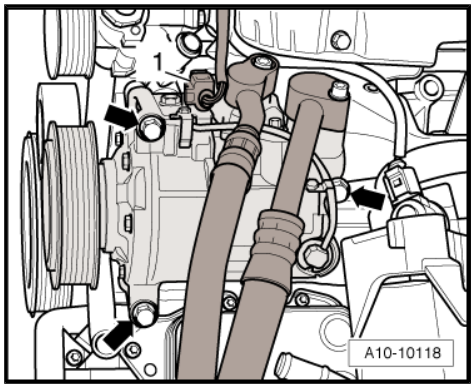

WARNING

The air conditioner refrigerant circuit must not be opened.

– Unscrew air conditioner compressor from bracket -arrows-.

Note

To prevent damage to the condenser and refrigerant pipes/hoses, ensure that the pipes and hoses are not stretched, kinked or bent.

– Tie up air conditioner compressor with lines attached to left-side of vehicle.

– Unbolt bracket for noise insulation -arrows-.

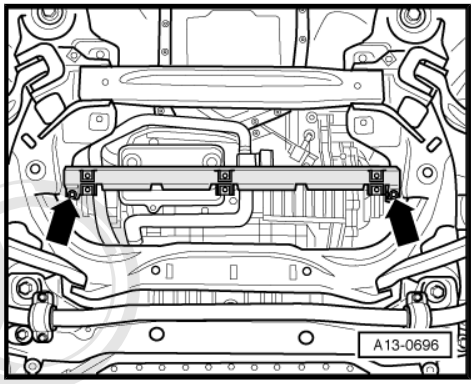

– Unscrew bolts -3- and -4- and remove heat shield downwards.

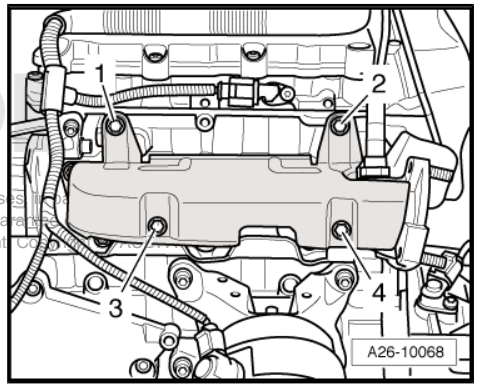

– Remove nuts -1- and -8- and detach bracket for heat shield.

– Unscrew nuts -2 ... 7- and -9- and remove exhaust manifold.

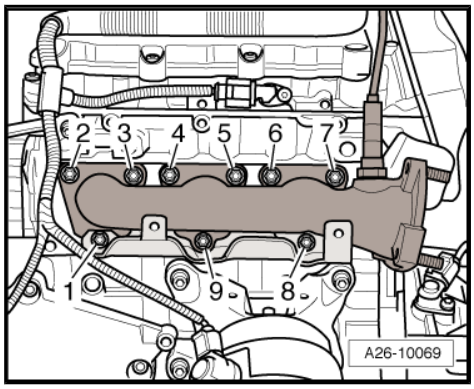

Installing

Installation is carried out in the reverse order; note the following:

Note

Renew gaskets and self-locking nuts.

– Tighten exhaust manifold in 2 stages in the following sequence:

1. Initially tighten to 15 Nm.
2. Tighten to 25 Nm.

– Install front exhaust pipe (left-side) together with catalytic converter ⇒ page 305 .

– Align exhaust system so it is free of stress ⇒ page 318 .

– Install air conditioner compressor ⇒ Rep. gr. 87 .

– Install poly V-belt ⇒ page 87 .

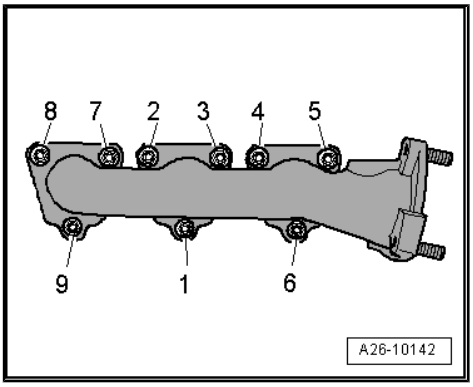

Tightening torques

Component	Nm
Exhaust manifold to cylinder head	25 1)2)
Heat shield to bracket for heat shield	10

- 1) Renew nuts.
- 2) Grease with high-temperature paste; refer to ⇒ Electronic parts catalogue for high-temperature paste

1.9 Removing and installing exhaust manifold (right-side)

Removing

– Remove front exhaust pipe (right-side) together with catalytic converter ⇒ page 309 .

– Unplug electrical connector -2- for Lambda probe - G39- and move wiring clear.

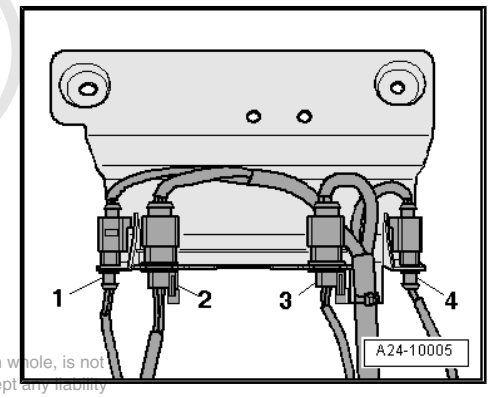

– Unscrew bolts -1 ... 4- and pull out heat shield upwards.

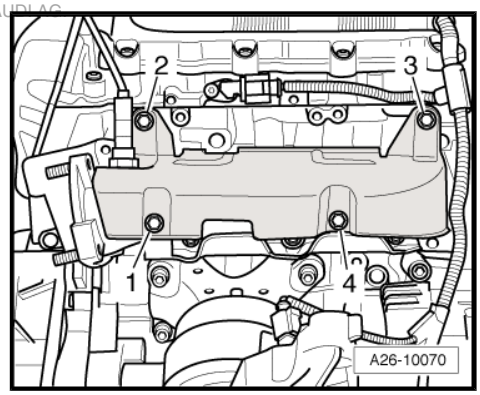

– Remove nuts -7- and -9- and detach bracket for heat shield.

– Unscrew nuts -1 ... 6- and -8- and remove exhaust manifold.

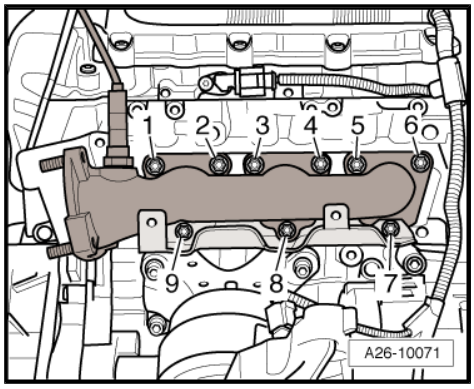

Installing

Installation is carried out in the reverse order; note the following:

Note

Renew gaskets and self-locking nuts.

– Tighten exhaust manifold in 2 stages in the following sequence:

1. Initially tighten nuts to 15 Nm.
2. Tighten nuts to 25 Nm.

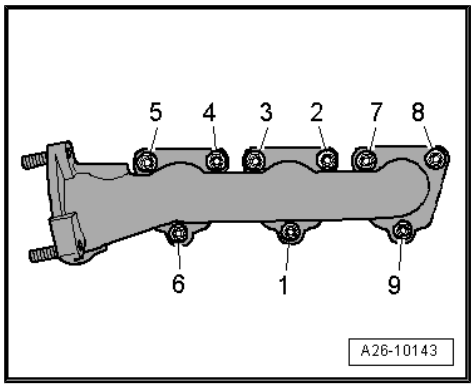

– Install front exhaust pipe (right-side) together with catalytic converter ⇒ page 309 .

– Align exhaust system so it is free of stress ⇒ page 318 .

Tightening torques

Component	Nm
Exhaust manifold to cylinder head	25 1)2)
Heat shield to bracket for heat shield	10

- 1) Renew nuts.
- 2) Grease with high-temperature paste; refer to ⇒ Electronic parts catalogue for high-temperature paste

1.10 Stress-free alignment of exhaust system

Note

The exhaust system must be aligned when it is cool.

– Align front section of exhaust system including front silencer and clamps ⇒ Item 10 (page 298) and ⇒ Item 16 (page 299) .

– Loosen bolts for clamps ⇒ Item 13 (page 299) .

– Push exhaust system towards front of vehicle -arrow-, so that rubber mountings ⇒ Item 2 (page 298) are pre-loaded by dimension -a-.

- Dimension -a- = 11 mm

– Tighten bolts on clamps evenly to 23 Nm.

– Align tailpipes ⇒ page 319 .

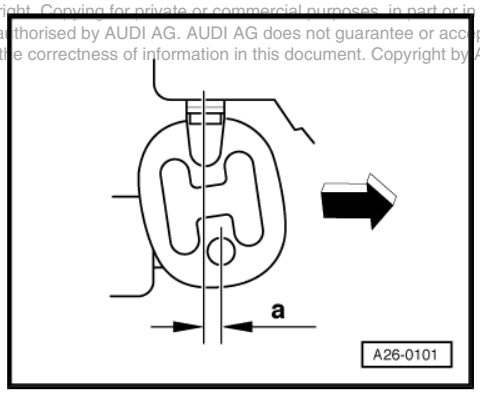

1.11 Aligning tailpipes

Procedure

– Check clearance between tailpipes and bumper on both sides.

• Dimension -x- (left-side) = dimension -x- (right-side)

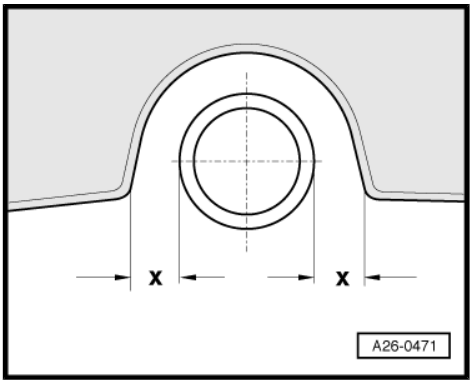

If necessary, correct dimension -x- as follows:

– Slacken bolt connection -arrow- on brace between exhaust pipes.

– Adjust the distance between the rear silencers.

– Tighten bolt connection to 25 Nm.

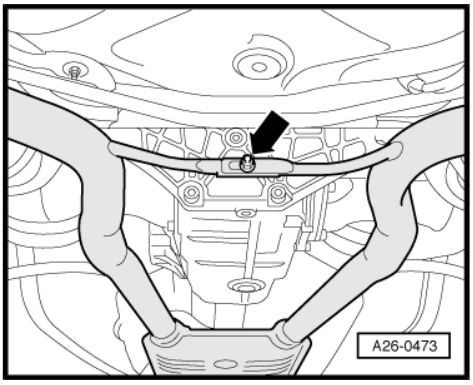

– Check distances -y- and -z- between tailpipes and bumper.

• Dimension -y- = 18 ... 22 mm.

• Dimension -z- = 8 ... 12 mm.

– If necessary, check whether the exhaust system is aligned free of stress ⇒ page 318 .

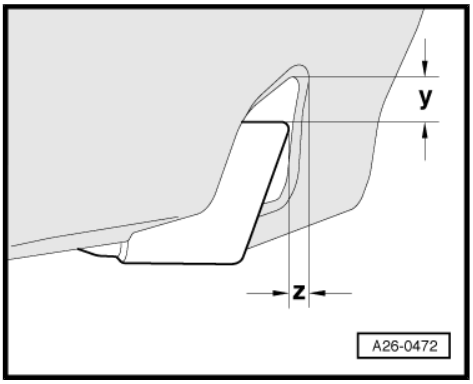

Tightening torque

Component	Nm
Brace between exhaust pipes	23 [1]
• [1] Renew nut.	

1.12 Checking exhaust system for leaks

– Start engine and run at idling speed.

– Seal off tailpipes for duration of leak test with cloths or plugs, etc.

– Listen at joints between cylinder head/exhaust manifold, exhaust manifold/front exhaust pipe etc. to check for leaks.

– Repair any leaks that are found.

28 – Ignition system

1 Servicing ignition system

⇒ “1.1 Technical data”, page 320

⇒ “1.2 Removing and installing ignition coils”, page 320

1.1 Technical data

Engine code		3.2 ltr. / 4V / 188 kW engine	3.2 ltr. / 4V / 191 kW engine
Idling speed		650 … 750 rpm (not adjustable)	
Ignition timing		Cannot be adjusted; determined by control unit	
Ignition system		Multi-coil system with 6 ignition coils (output stages integrated) connected directly to spark plugs	
Spark plugs	Designations	⇒ Data sheets for exhaust emissions test	
	Tightening torque	⇒ Maintenance ; Booklet 404	
Firing order		1-5-3-6-2-4	

1.2 Removing and installing ignition coils

Special tools and workshop equipment required

- Puller - T40039-

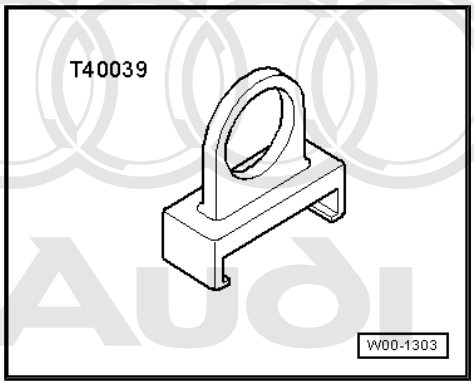

Removing

– Pull off engine cover panel (front) -arrows-.

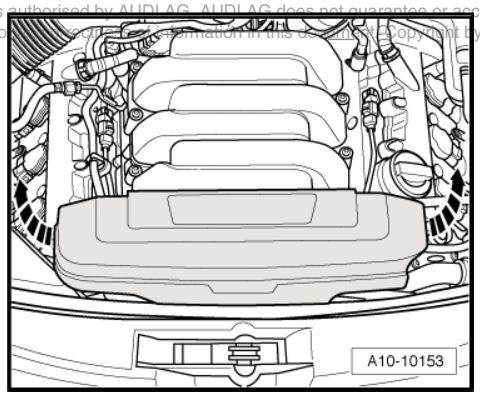

Cylinder bank 1 (right-side):

– Pull off engine cover panel (rear) -arrows-.

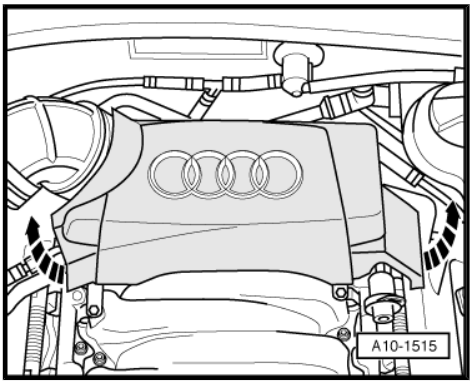

– If fitted, remove cover for suspension turret (right-side); to do so, detach spreader clips -1- and unscrew nut -2-.
– Pull cover out of retainers -arrows-.

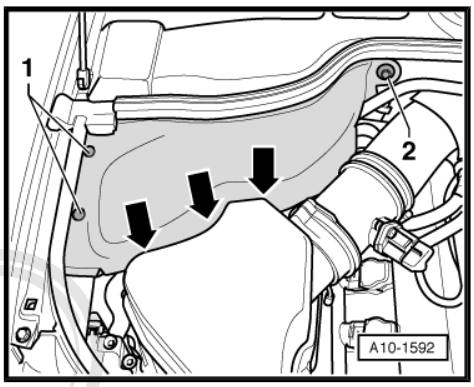

– Release hose clip -arrow- and disconnect air intake hose at air cleaner housing.
– Detach electrical connector -1- at non-return valve
– Detach vacuum line -2-.
– Release hose clips -arrows- and remove air intake hose.
– Unplug electrical connector -1-.
– Detach vacuum hose -2-.
– Remove bolts -arrows-.
– Take out air cleaner housing.

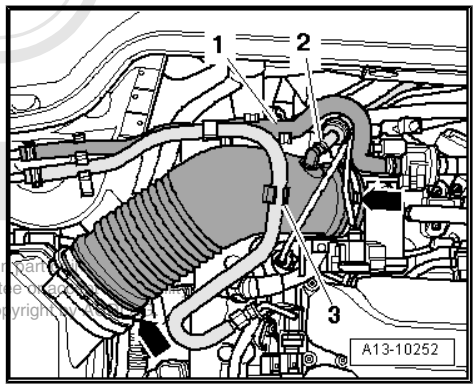

– Unplug electrical connectors at coolant temperature sender - G62- -item 1- and variable intake manifold flap change-over valve - N239- -item 2-.

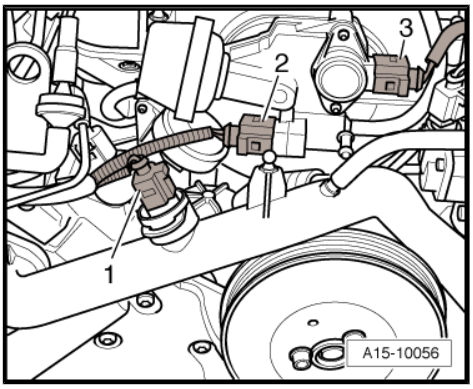

– Unplug electrical connectors:

1 - Exhaust camshaft control valve 1 - N318-

2 - Camshaft control valve 1 - N205-

3 - Hall sender - G40-

4 - Intake manifold flap potentiometer - G336-

5 - Hall sender 3 - G300-

– Unscrew bolts -arrows- and unplug electrical connectors at ignition coils.

– Move wiring harness clear.

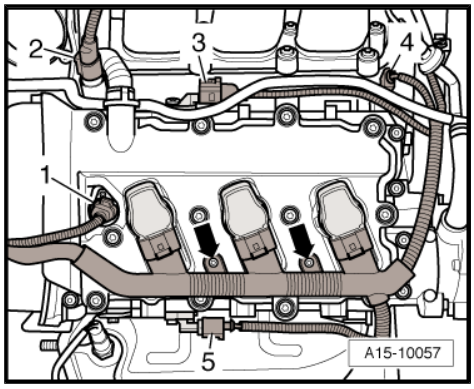

Cylinder bank 2 (left-side):

– Unplug electrical connectors at variable intake manifold position sender - G513- -item 1- and at fuel pressure sender for low pressure - G410- -item 2-.

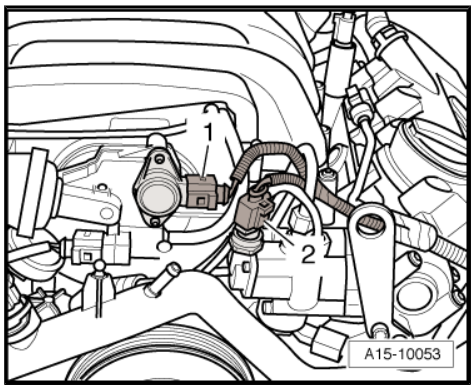

– Unplug electrical connectors:

1 - Hall sender 2 - G163-

2 - Camshaft control valve 2 - N208-

3 - Exhaust camshaft control valve 2 - N319-

4 - Hall sender 4 - G301-

– Unscrew bolts -arrows- and unplug electrical connectors at ignition coils.

– Move wiring harness clear.

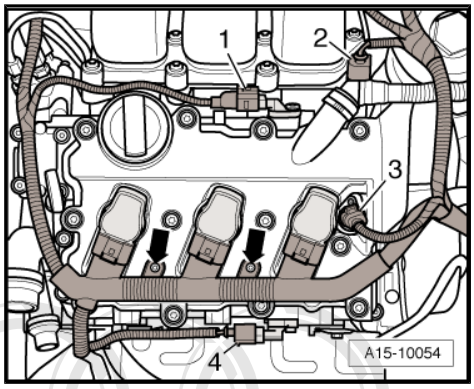

Continuation for both sides:

– Pull ignition coils out with puller - T40039- .

Installing

Install in reverse order.

Tightening torque

Component	Nm
Hose clips (9 mm wide)	3