Workshop Manual

Audi A8 2003 ➤

8-cylinder TDI engine (4.2 ltr. 4-valve common rail), mechanics									
Engine ID	BVN	BMC							

Edition 12.2013

Protected by copyright. Copying for private or commercial purposes, in part or in whole, is not permitted unless authorised by AUDI AG. AUDI AG does not guarantee or accept any liability with respect to the correctness of information in this document. Copyright by AUDI AG.

List of Workshop Manual Repair GroupsList of Workshop Manual Repair GroupsList of Workshop Manual Repair Groups

Repair Group

00 - Technical data
10 - Removing and installing engine
13 - Crankshaft group
15 - Cylinder head, valve gear
17 - Lubrication
19 - Cooling
21 - Turbocharging/supercharging
26 - Exhaust system

Protected by copyright. Copying for private or commercial purposes, in part or in whole, is not permitted unless authorised by AUDI AG. AUDI AG does not guarantee or accept any liability with respect to the correctness of information in this document. Copyright by AUDI AG.

Technical information should always be available to the foremen and mechanics, because their careful and constant adherence to the instructions is essential to ensure vehicle road-worthiness and safety. In addition, the normal basic safety precautions for working on motor vehicles must, as a matter of course, be observed.

All rights reserved.
No reproduction without prior agreement from publisher.

Copyright © 2014 Audi AG, Ingolstadt

A0051122920

Contents

00 - Technical data . . . 1

1 Engine number . . . 1
2 Engine data . . . 2
3 Safety precautions . . . 3
3.1 Safety precautions when working on the fuel supply system . . . 3
3.2 Safety precautions when using testers and measuring instruments during a road test . . . 4
3.3 Safety precautions when working on the cooling system . . . 4
4 General repair instructions . . . 5
4.1 Rules for cleanliness . . . 5
4.2 Checking for leaks in the fuel system . . . 5
4.3 Foreign particles in engine . . . 6
4.4 Contact corrosion . . . 6
4.5 Routing and attachment of pipes, hoses and wiring . . . 6
4.6 Installing radiators, condensers and charge air coolers . . . 6
4.7 Checking vacuum system . . . 6

10 - Removing and installing engine . . . 8

1 Removing engine . . . 8
2 Separating engine and gearbox . . . 31
3 Securing engine to assembly stand . . . 38
4 Installing engine . . . 40
5 Assembly mountings . . . 46
5.1 Assembly mountings - exploded view . . . 46
5.2 Removing and installing engine mounting (left-side) . . . 47
5.3 Removing and installing engine mounting (right-side) . . . 47
5.4 Removing and installing mounting for torque reaction support . . . 48

13 - Crankshaft group . . . 52

1 Lowering subframe for repair and assembly work . . . 52
2 Servicing work on pulley end . . . 59
2.1 Poly V-belt drive - exploded view . . . 59
2.2 Removing and installing poly V-belt . . . 60
2.3 Removing and installing tensioner for poly V-belt . . . 62
2.4 Removing and installing vibration damper . . . 63
2.5 Oil seal and sealing flange (pulley end) - exploded view . . . 64
2.6 Renewing crankshaft oil seal (pulley end) . . . 65
2.7 Removing and installing sealing flange (front) . . . 68
3 Servicing work on timing chain end . . . 71
3.1 Drive plate - exploded view . . . 71
3.2 Removing and installing drive plate . . . 71
3.3 Renewing crankshaft oil seal (timing chain end) . . . 72
3.4 Renewing oil seal for toothed belt drive sprocket . . . 74
3.5 Vacuum pump - exploded view . . . 86
3.6 Removing and installing vacuum pump . . . 88
4 Removing and installing crankshaft . . . 92
4.1 Crankshaft - exploded view . . . 92
4.2 Allocation of main bearing shells for new crankshafts . . . 94
4.3 Allocation of crankshaft bearing shells for retaining frame without visible colour coding . . . 95
4.4 Crankshaft dimensions . . . 95
4.5 Measuring axial clearance . . . 95
4.6 Measuring radial clearance . . . 96

This document is for personal or non-commercial purposes, in part or in whole, is not permitted unless authorised by AUDI AG. AUDI AG does not guarantee or accept any liability with respect to the correctness of information in this document. Copyright by AUDI AG.

5 Dismantling and assembling pistons and conrods . . . 98
5.1 Pistons and conrods - exploded view . . . 98
5.2 Removing and installing pistons . . . 101
5.3 Piston and cylinder dimensions . . . 102
5.4 Measuring radial clearance of conrods . . . 102
5.5 Allocation of conrod bearing shells . . . 103
5.6 Measuring piston projection at TDC . . . 103

15 - Cylinder head, valve gear . . . 106
1 Chain drive . . . 106
1.1 Timing chain covers - exploded view . . . 106
1.2 Removing and installing timing chain covers . . . 108
1.3 Camshaft timing chains - exploded view . . . 116
1.4 Detaching camshaft timing chains from camshafts . . . 118
1.5 Removing and installing camshaft timing chains . . . 129
1.6 Drive chain for valve gear - exploded view . . . 138
1.7 Removing and installing drive chain for valve gear . . . 140
1.8 Chain for auxiliary drives - exploded view . . . 141
1.9 Removing and installing chain for auxiliary drives . . . 142
1.10 Auxiliary drives - exploded view . . . 144
1.11 Renewing oil seal for power steering pump drive . . . 145
1.12 Removing and installing spur gear drive . . . 148
2 Removing and installing cylinder head . . . 152
2.1 Cylinder head - exploded view . . . 152
2.2 Cylinder head cover - exploded view . . . 154
2.3 Removing and installing cylinder head cover . . . 155
2.4 Removing and installing cylinder head . . . 156
2.5 Checking compression . . . 161
3 Servicing valve gear . . . 164
3.1 Valve gear - exploded view . . . 164
3.2 Measuring axial clearance of camshafts . . . 166
3.3 Measuring radial clearance of camshafts . . . 167
3.4 Removing and installing camshafts . . . 167
3.5 Renewing valve stem oil seals with cylinder head installed . . . 173
3.6 Renewing valve stem oil seals with cylinder head removed . . . 176
3.7 Checking hydraulic valve compensation elements . . . 179
3.8 Valve dimensions . . . 180
3.9 Machining valve seats . . . 180
3.10 Checking valve guides . . . 180
3.11 Checking valves . . . 181

17 - Lubrication . . . 182
1 Removing and installing parts of lubrication system . . . 182
1.1 Oil pump, sump (bottom section), sump (centre section) - exploded view . . . 182
1.2 Removing and installing oil level and oil temperature sender G266 . . . 184
1.3 Removing and installing sump (bottom section) . . . 184
1.4 Removing and installing sump (centre section) . . . 186
1.5 Removing and installing oil pump . . . 195
1.6 Sump (top section) - exploded view . . . 197
1.7 Removing and installing sump (top section) . . . 198
1.8 Oil cooler, pressure control valve, oil filter housing and spray nozzle valve - exploded view . . . 202
1.9 Removing and installing oil cooler . . . 204
1.10 Removing and installing oil filter housing . . . 205
1.11 Removing and installing pressure control valve for crankcase breather system . . . 206

Protected by copyright. Copying for private or commercial purposes, in part or in whole, is not permitted unless authorised by AUDI AG. AUDI AG does not guarantee or accept any liability with respect to the correctness of information in this document. Copyright by AUDI AG.

1.12 Removing and installing mounting plate for oil cooler, pressure control valve and oil filter housing . . . 208
1.13 Removing and installing oil pressure switch F1 . . . 210
1.14 Removing and installing oil temperature sender G8 . . . 210
1.15 Checking oil pressure . . . 211
1.16 Engine oil . . . 212
1.17 Checking engine oil level . . . 212

19 - Cooling . . . 213
1 Removing and installing parts of cooling system . . . 213
1.1 Connection diagram - coolant hoses . . . 213
1.2 Draining and filling cooling system . . . 215
1.3 Coolant pump and thermostat - exploded view . . . 220
1.4 Removing and installing coolant pump . . . 222
1.5 Removing and installing thermostat . . . 225
1.6 Checking thermostat . . . 227
1.7 Removing and installing coolant pipes (front) . . . 227
1.8 Removing and installing coolant pipe (left-side) . . . 232
1.9 Removing and installing coolant pipe (right-side) . . . 237
1.10 Removing and installing coolant pipe (rear) . . . 237
1.11 Removing and installing coolant temperature sender G62 . . . 240
1.12 Radiator and radiator fans - exploded view . . . 240
1.13 Removing and installing radiator . . . 242
1.14 Removing and installing radiator cowl . . . 246
1.15 Removing and installing radiator fans . . . 247
1.16 Checking cooling system for leaks . . . 248

21 - Turbocharging/supercharging . . . 250
1 Servicing charge air system with turbocharger . . . 250
1.1 Turbocharger - exploded view . . . 250
1.2 Removing and installing turbocharger (left-side) . . . 252
1.3 Removing and installing turbocharger (right-side) . . . 258
1.4 Charge air cooling - exploded view . . . 266
1.5 Removing and installing charge air cooler (left-side) . . . 268
1.6 Removing and installing charge pressure sender G31 . . . 270
1.7 Removing and installing charge air cooler (right-side) . . . 271

26 - Exhaust system . . . 273
1 Removing and installing parts of exhaust system . . . 273
1.1 Exhaust system - exploded view . . . 273
1.2 Emission control - exploded view . . . 277
1.3 Removing and installing exhaust gas temperature sender 1 G235 . . . 280
1.4 Removing and installing exhaust gas temperature sender 1 for bank 2 G236 . . . 281
1.5 Removing and installing exhaust gas temperature sender 2 G448 . . . 282
1.6 Removing and installing exhaust gas temperature sender 2 for bank 2 G449 . . . 284
1.7 Removing and installing temperature sender 2 before particulate filter G498 . . . 288
1.8 Removing and installing temperature sender before particulate filter G506 . . . 291
1.9 Separating Y-pipe and rear silencers . . . 294
1.10 Removing and installing starter catalytic converter (left-side) . . . 295
1.11 Removing and installing starter catalytic converter (right-side) . . . 301
1.12 Removing and installing exhaust pipe (left-side) . . . 306
1.13 Removing and installing exhaust pipe (right-side) . . . 307
1.14 Removing and installing particulate filter/main catalytic converter (left-side) . . . 309
1.15 Removing and installing particulate filter/main catalytic converter (right-side) . . . 310
1.16 Exhaust manifold - exploded view . . . 310
1.17 Removing and installing exhaust manifold (left-side) . . . 312

Protected by copyright. Copying for private or commercial purposes, in part or in whole, is not permitted unless authorised by AUDI AG. AUDI AG does not guarantee or accept any liability with respect to the correctness of information in this document. Copyright by AUDI AG.

1.18 Removing and installing exhaust manifold (right-side) 312
1.19 Stress-free alignment of exhaust system 313
1.20 Aligning tailpipes 314
1.21 Checking exhaust system for leaks 314
2 Servicing exhaust gas recirculation system 316
2.1 Exhaust gas recirculation on cylinder bank (left-side) - exploded view 316
2.2 Removing and installing exhaust gas recirculation control motor 2 V339 (left-side) 317
2.3 Exhaust gas recirculation on cylinder bank (right-side) - exploded view 317
2.4 Removing and installing control motor for exhaust gas recirculation V338 (right-side) 319
2.5 Exhaust gas recirculation cooler with change-over flap - exploded view 319
2.6 Removing and installing exhaust gas recirculation cooler with change-over flap 320
2.7 Removing and installing exhaust gas recirculation cooler 323

Protected by copyright. Copying for private or commercial purposes, in part or in whole, is not permitted unless authorised by AUDI AG. AUDI AG does not guarantee or accept any liability with respect to the correctness of information in this document. Copyright by AUDI AG.

00 – Technical data

1 Engine number

(ARL003637; Edition 12.2013)

- The engine number (including “engine code” and “serial number”) can be found on the inner part of the block below the intake manifold (left-side).
- There is also a sticker on the intake manifold showing the “engine code” and “serial number”.
- The engine code is also included on the vehicle data sticker.

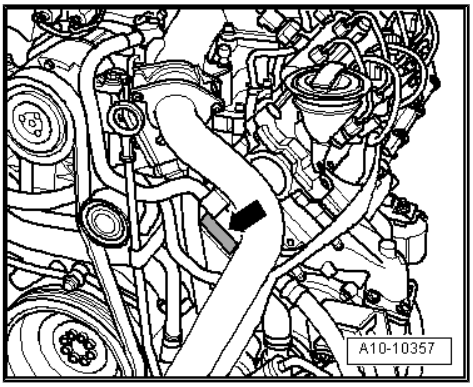

Protected by copyright. Copying for private or commercial purposes, in part or in whole, is not permitted unless authorised by AUDI AG. AUDI AG does not guarantee or accept any liability with respect to the correctness of information in this document. Copyright by AUDI AG.

2 Engine data

Code letters		BMC	BVN
Capacity	ltr.	4.134	4.134
Power output	kW at rpm	235/3750	240/3750
Torque	Nm at rpm	650/1800 … 2500	650/1800 … 2500
Bore	∅ mm	83.0	83.0
Stroke	mm	95.5	95.5
Compression ratio		16.4	16.4
Fuel	According to	DIN EN 590	DIN EN 590
Firing order		1-5-4-8-6-3-7-2	1-5-4-8-6-3-7-2
Exhaust gas recirculation		yes	yes
Turbocharging/supercharging		yes	yes
Catalytic converter		yes	yes
Charge air cooling		yes	yes
Lambda probes before catalytic converter		yes	yes
Particulate filter		yes	yes

Protected by copyright. Copying for private or commercial purposes, in part or in whole, is not permitted unless authorised by AUDI AG. AUDI AG does not guarantee or accept any liability with respect to the correctness of information in this document. Copyright by AUDI AG.

3 Safety precautions

⇒ “3.1 Safety precautions when working on the fuel supply system”, page 3

⇒ “3.2 Safety precautions when using testers and measuring instruments during a road test”, page 4

⇒ “3.3 Safety precautions when working on the cooling system”, page 4

Protected by copyright. Copying for private or commercial purposes, in part or in whole, is not permitted unless authorised by AUDI AG. AUDI AG does not guarantee or accept liability with respect to the correctness of information in this document. Copyright by AUDI AG

3.1 Safety precautions when working on the fuel supply system

When working on the fuel system note the following warnings:

> ⚠ WARNING
>
> *Risk of injury - fuel system operates under pressure.*
>
> - *Wrap a clean cloth around the connection before opening the fuel system. Then release pressure by carefully loosening the connection.*
> - *Wear protective gloves.*
> - *Wear safety goggles.*
>
> *The fuel can become extremely hot. This can cause injuries.*
>
> - *In extreme cases the temperature of the fuel lines and the fuel can be up to 100 °C after the engine is switched off. Allow the fuel to cool down before disconnecting the lines - danger of scalding.*
> - *Wear protective gloves.*
> - *Wear safety goggles.*

> ⚠ Caution
>
> *The high-pressure pump has very close tolerances and must not be allowed to run without fuel. To prevent this and to enable the engine to start quickly after parts have been renewed, it is important to observe the following:*
>
> - *If the high-pressure pump or the components of the fuel system between the fuel tank and the high-pressure pump are removed or renewed, the fuel system must be bled ⇒ Rep. gr. 23 ; Bleeding fuel system after installing high-pressure pump .*

Observe the following points to prevent personal injuries and damage to the injection and glow plug system:

- Persons wearing a cardiac pacemaker must at all times maintain a safe distance from high-voltage components such as injectors and gas-discharge headlights.
- Always switch off the ignition before connecting or disconnecting tester cables or electrical wiring for the injection or glow plug system.
- Do not open any fuel line connections while the engine is running.
- Always switch off ignition before washing engine.

- Erase any entries in event memory resulting from repairs
  ⇒ Vehicle diagnostic tester.

> ⚠ **Caution**
>
> *To prevent irreparable damage to the electronic components when disconnecting the battery:*
>
> - *Observe notes on procedure for disconnecting the battery.*
> - *Always switch off the ignition before disconnecting the battery ⇒ Electrical system; Rep. gr. 27 .*

3.2 Safety precautions when using testers and measuring instruments during a road test

Note the following if testers and measuring instruments have to be used during a road test:

> ⚠ **WARNING**
>
> *Accidents can be caused if the driver is distracted by test equipment while road-testing, or if test equipment is not properly secured.*
>
> *Persons sitting in the front passenger's seat could be injured if the airbag is triggered in an accident.*
>
> - *The use of test equipment while driving causes distraction.*
> - *There is an increased risk of injury if test equipment is not secured.*
> - *Test equipment must always be secured on the rear seat with a strap and operated from the rear seat by a second person.*

3.3 Safety precautions when working on the cooling system

When working on the cooling system note the following warnings:

> ⚠ **WARNING**
>
> *Hot steam/hot coolant can escape - risk of scalding.*
>
> - *The cooling system is under pressure when the engine is hot.*
> - *To allow pressure to dissipate, cover filler cap on coolant expansion tank with cloth and open carefully.*

> ⚠ **Caution**
>
> *Overheating can occur if the filler cap is not fitted properly.*
>
> - *The filler cap must engage positively and audibly when it is closed.*

Protected by copyright. Copying for private or commercial purposes, in part or in whole, is not permitted unless authorised by AUDI AG. AUDI AG does not guarantee or accept any liability with respect to the correctness of information in this document. Copyright by AUDI AG.

4 General repair instructions

⇒ “4.1 Rules for cleanliness”, page 5

⇒ “4.2 Checking for leaks in the fuel system”, page 5

⇒ “4.3 Foreign particles in engine”, page 6

⇒ “4.4 Contact corrosion”, page 6

⇒ “4.5 Routing and attachment of pipes, hoses and wiring”, page 6

⇒ “4.6 Installing radiators, condensers and charge air coolers”, page 6

⇒ “4.7 Checking vacuum system”, page 6

4.1 Rules for cleanliness

Even small amounts of dirt can cause malfunctions. For this reason, please observe the following rules when working on the fuel supply system, injection system and turbocharger:

- Carefully clean connection points and the surrounding area with engine cleaner or brake cleaner and dry thoroughly before opening.
- Immediately seal open lines and connections with clean plugs, for example from engine bung set - VAS 6122- .
- Do not remove sealing caps from components until immediately prior to installation. Keep components that are to be reused in new, sealable plastic bags.
- Place parts that have been removed on a clean surface and cover them over. Do not use fluffy cloths.
- Carefully cover or seal open components if repairs cannot be carried out immediately.
- Only install clean components; replacement parts should only be unpacked immediately prior to installation. Do not use parts that have not been stored in the proper packaging (e.g. in tool boxes etc.).
- When the system is open: Do not work with compressed air. Do not move the vehicle unless absolutely necessary.
- Make sure that no fuel runs onto the fuel hoses. Should this occur, the fuel hoses must be cleaned again immediately.
- Also ensure that no diesel fuel comes into contact with the coolant hoses. Should this occur, the hoses must be cleaned immediately. Damaged hoses must be renewed.
- Protect unplugged electrical connectors against dirt and moisture and make sure connections are dry when attaching.

Protected by copyright. Copying for private or commercial purposes, in part or in whole, is not permitted unless authorised by AUDI AG. AUDI AG does not guarantee or accept any liability with respect to the correctness of information in this document. Copyright by AUDI AG.

4.2 Checking for leaks in the fuel system

- Start the engine and let it run at medium speed for a few minutes.
- Switch off ignition.
- Check the entire fuel system for leaks.
- If leaks are found although the connections have been tightened to the correct torque, the relevant component must be renewed.
- Then carry out a test drive with at least one full-power acceleration.

– Then check high-pressure part of fuel system again for leakage.

4.3 Foreign particles in engine

- When performing assembly work on the engine, all open passages in the intake and exhaust systems must be sealed with suitable plugs (e.g. from engine bung set - VAS 6122-) to prevent foreign particles from entering the engine.
- In the event of mechanical damage to one of the cylinder banks, the intake and exhaust systems and combustion chambers of the opposite cylinder bank must always be examined to prevent further damage occurring later.

Note

If the turbocharger has suffered mechanical damage
⇒ page 252

4.4 Contact corrosion

Contact corrosion can occur if unsuitable fasteners are used (e.g. bolts, nuts, washers, etc.).

For this reason, only fasteners with a special surface coating are used.

Additionally, all rubber and plastic parts and all adhesives are made of non-conductive materials.

Always install new parts if you are not sure whether used parts can be re-fitted ⇒ Electronic parts catalogue .

Note the following:

- We recommend using only genuine replacement parts; these have been tested and are compatible with aluminium.
- We recommend the use of Audi accessories.
- Damage caused by contact corrosion is not covered under warranty.

Protected by copyright. Copying for private or commercial purposes, in part or in whole, is not permitted unless authorised by AUDI AG. AUDI AG does not guarantee or accept any liability with respect to the correctness of information in this document. Copyright by AUDI AG.

4.5 Routing and attachment of pipes, hoses and wiring

- Mark fuel lines, hydraulic lines, vacuum lines and electrical wiring etc. before removal so they can be re-installed in the original positions and correctly connected. Make sketches or take photographs if necessary.
- To prevent damaging pipes, hoses and wiring, ensure sufficient clearance from all moving or hot components in engine compartment (little space in engine compartment).

4.6 Installing radiators, condensers and charge air coolers

Even when the radiator, condenser and charge air cooler are correctly installed, slight impressions may be visible on the fins of these components. This does not mean that the components are damaged. If the fins are only very slightly distorted, this does not justify renewal of the radiator, charge air cooler or condenser.

4.7 Checking vacuum system

Special tools and workshop equipment required

- Hand vacuum pump - VAS 6213-

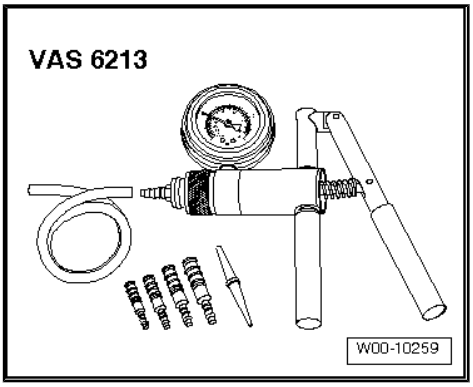

Procedure

– Check all vacuum lines in the complete vacuum system for:

- Cracks
- Traces of animal bites
- Kinked or crushed lines
- Lines porous or leaking

– Check vacuum line to solenoid valve and from solenoid valve to corresponding component.

– If a fault is stored in the memory, check the vacuum lines leading to the corresponding component and also check the remaining vacuum lines in the system.

– If it is not possible to build up pressure with hand vacuum pump - VAS 6213- or if the pressure drops again immediately, check hand vacuum pump and connecting hoses for leaks.

Protected by copyright. Copying for private or commercial purposes, in part or in whole, is not permitted unless authorised by AUDI AG. AUDI AG does not guarantee or accept any liability with respect to the correctness of information in this document. Copyright by AUDI AG.

10 – Removing and installing engine

1 Removing engine

Special tools and workshop equipment required

- Removal lever - 80 - 200-
- Eye-head bolt - 3368-
- Used oil collection and extraction unit - V.A.G 1782- or -VAS 6622A-
- Engine bung set - VAS 6122-
- Scissor-type assembly platform - VAS 6131 A- with support set for Audi - VAS 6131/10-
- Drip tray for workshop hoist - VAS 6208-

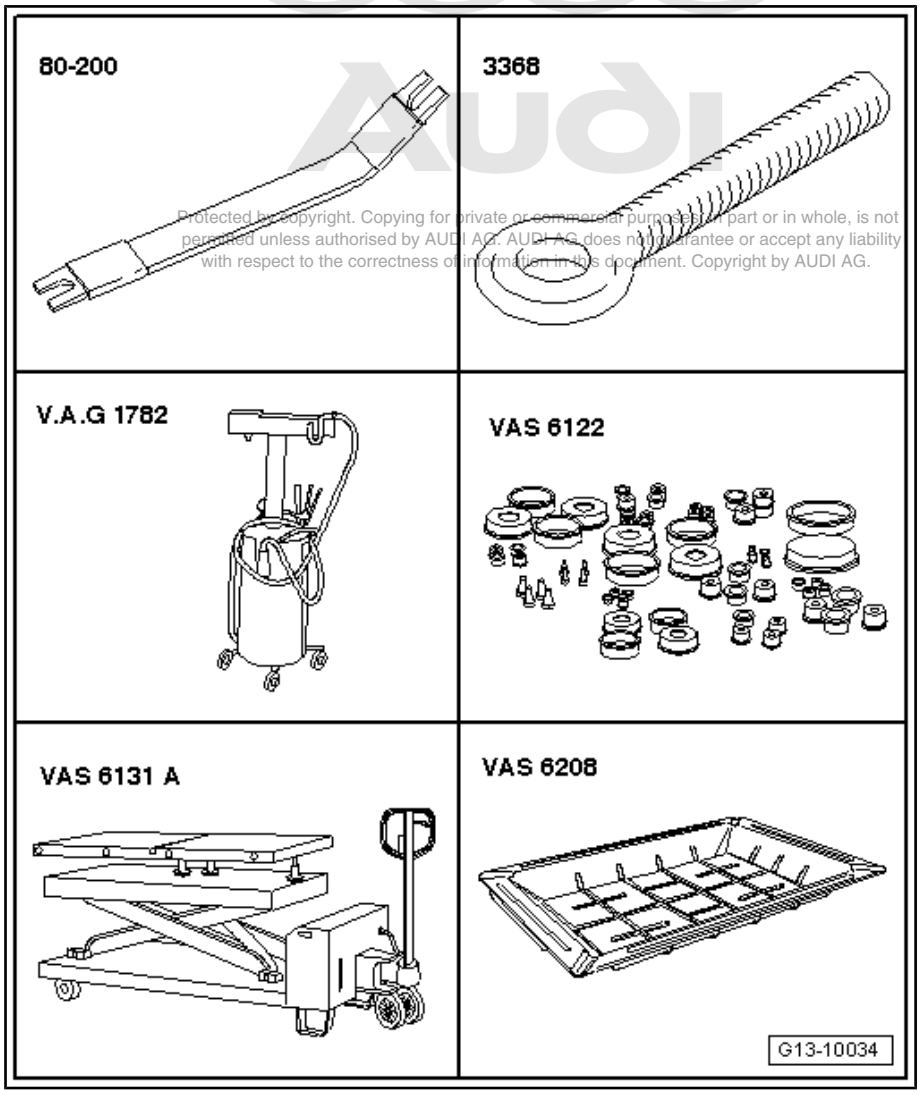

Protected by copyright. Copying for private or commercial purposes, in part or in whole, is not permitted unless authorised by AUDI AG. AUDI AG does not guarantee or accept any liability with respect to the correctness of information in this document. Copyright by AUDI AG.

- Spark plug connector pliers - V.A.G 1922-

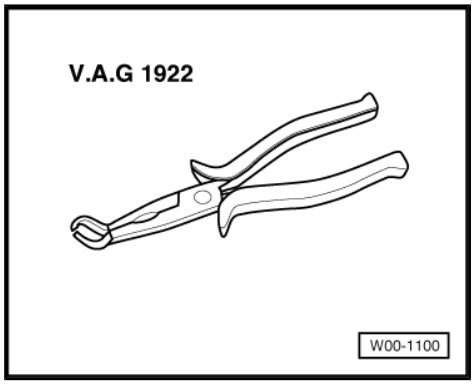

- Release tool - VAS 1978/8A- from wiring harness repair set - VAS 1978 B-

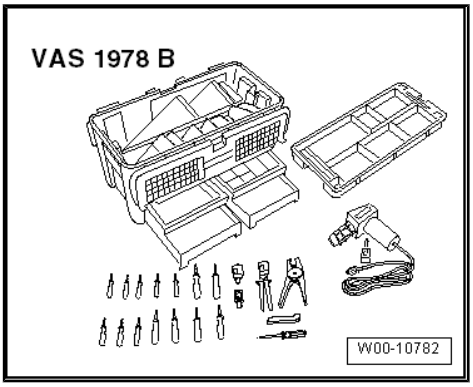

- Tensioning strap - T10038-

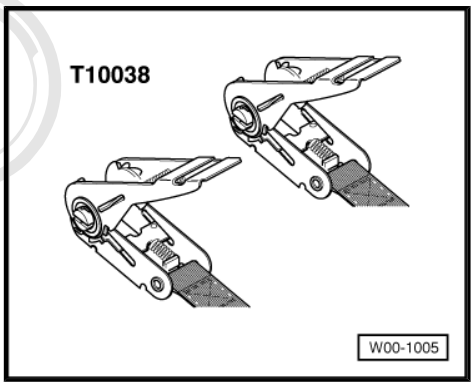

Protected by copyright. Copying for private or commercial purposes, in part or in whole, is not permitted unless authorised by AUDI AG. AUDI AG does not guarantee or accept any liability with respect to the correctness of information in this document. Copyright by AUDI AG.

- Tool set for wiper arms - T10369-

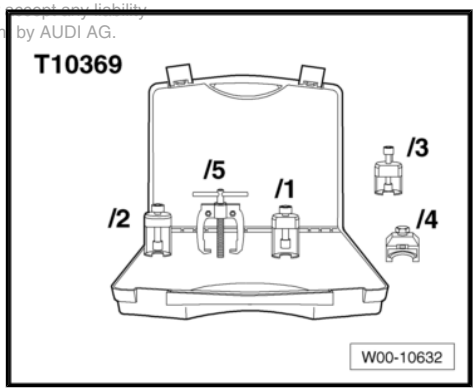

Procedure

Note

- *The engine is removed from underneath together with the gearbox and subframe (with lock carrier detached).*
- *All cable ties which are released or cut open when removing must be fitted in the same position when installing.*

– Discharge the refrigerant system ⇒ Air conditioner system - with refrigerant R134a .

Caution

Observe notes on procedure for disconnecting the battery ⇒ Electrical system; Rep. gr. 27 .

– Switch off ignition.

Note

- *To make sure you can still move the front wheels when the battery has been disconnected, only disconnect the battery with the ignition key inserted.*
- *On four-wheel drive vehicles the electronic parking brake must be released before disconnecting the battery, so that the prop-shaft can be turned during removal.*

– Remove luggage compartment side trim cover (right-side) -arrows-.

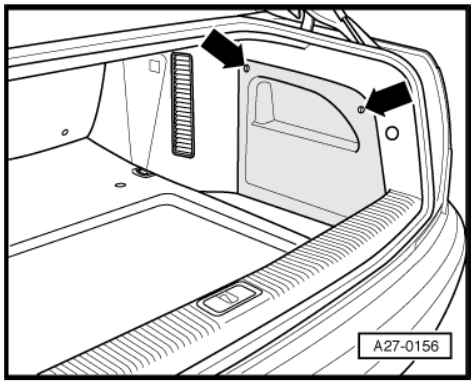

– Remove cover -1- over battery.

Note

Disregard -item 2-.

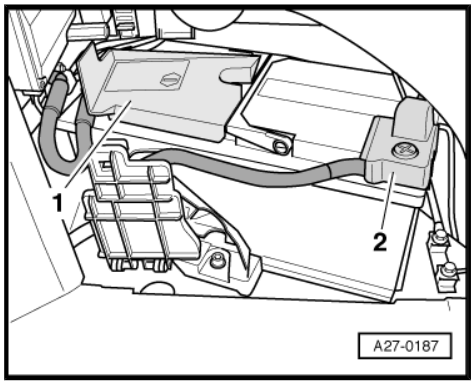

– Disconnect earth cable -arrow- at battery.

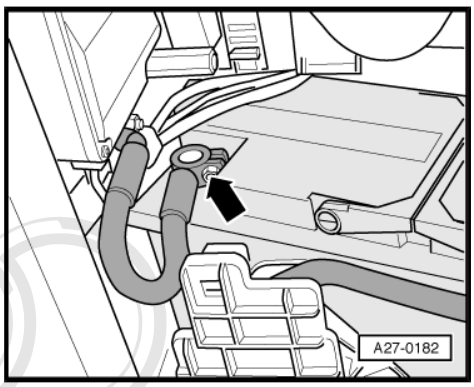

Protected by copyright. Copying for private or commercial purposes, in part or in whole, is not permitted unless authorised by AUDI AG. AUDI AG does not guarantee or accept any liability with respect to the correctness of information in this document. Copyright by AUDI AG.

– Carefully pull engine cover panel off four retaining pins one after the other -arrows-.

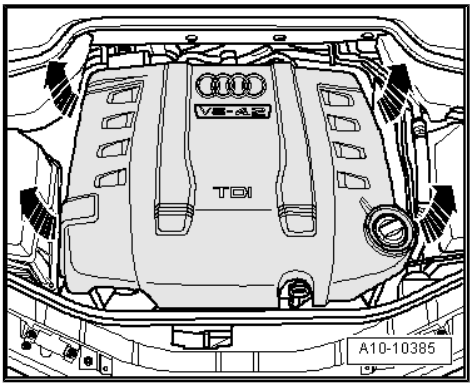

– Remove cover above coolant expansion tank -arrows-.

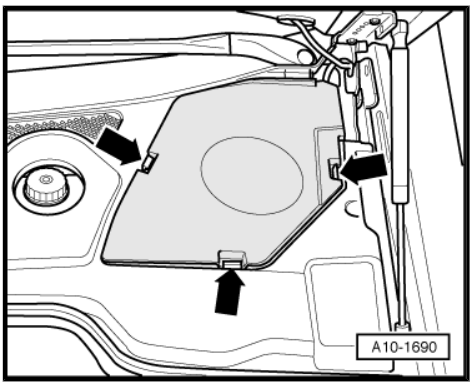

> ⚠ WARNING
>
> *Hot steam or hot coolant can escape when expansion tank is opened; cover filler cap with cloth and open carefully.*

– Open filler cap on coolant expansion tank.

– Remove both front wheels.

– Release fasteners -1-, -2- and -4- and take off noise insulation panels.

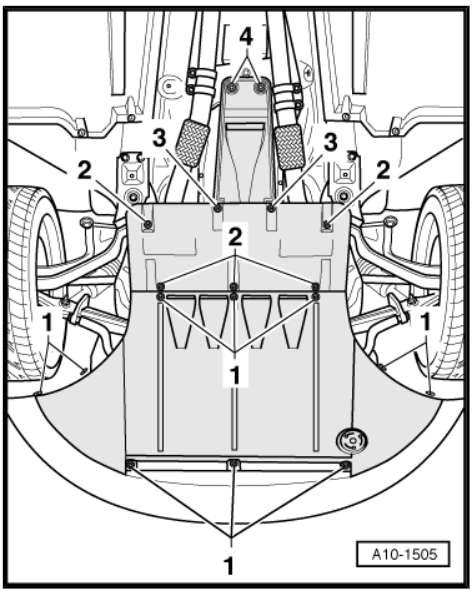

– Place drip tray for workshop hoist - VAS 6208- under engine.

– Remove drain plug -arrow- and let coolant drain.

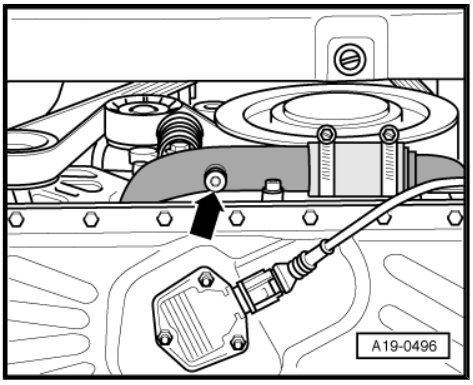

Protected by copyright. Copying for private or commercial purposes, in part or in whole, is not permitted unless authorised by AUDI AG. AUDI AG does not guarantee or accept any liability with respect to the correctness of information in this document. Copyright by AUDI AG.

– Disconnect coolant hose -arrow- from coolant pipe and drain off remaining coolant.

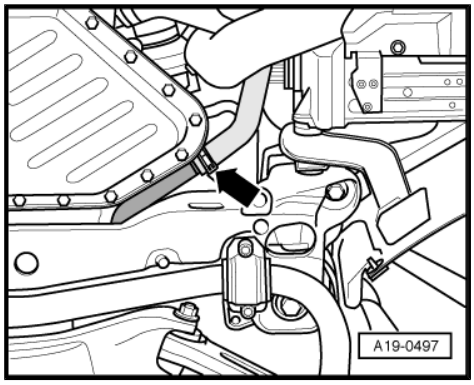

– Remove air hose (front left) -arrows-.

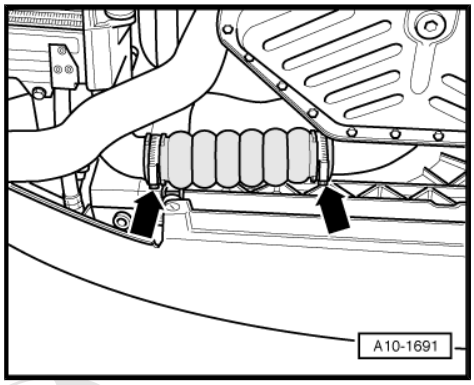

– Pull off retaining clip for bottom coolant hose and detach coolant hose -1- from radiator.

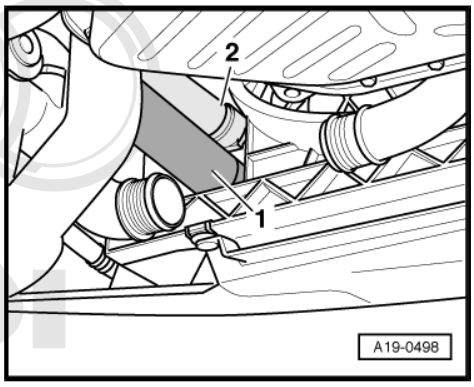

Note

Disregard -item 2-.

– Remove front and rear sections of front wheel housing liners (left and right) ⇒ Rep. gr. 66 .

– Remove bumper cover (front) ⇒ Rep. gr. 63 .

Protected by copyright. Copying for private or commercial purposes, in part or in whole, is not permitted unless authorized by AUDI AG. AUDI AG does not guarantee or assume any liability with respect to the correctness of information in this document. © AUDI AG, Ingolstadt

– Unscrew bolts -arrows- and detach top section of air cleaner housing (left-side).

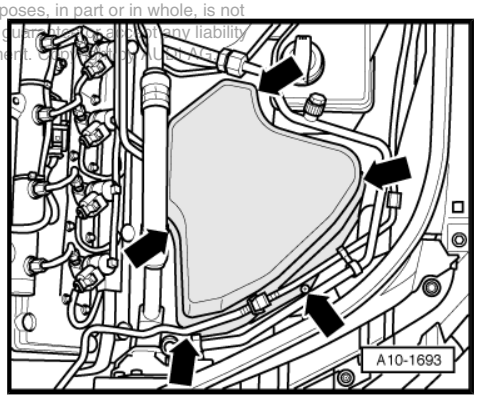

– Remove bolts -arrows- and detach top section of air cleaner housing (right-side).

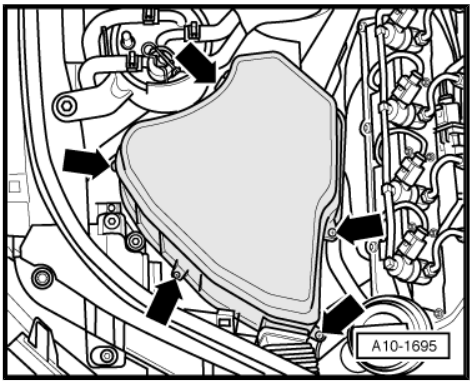

– Unplug electrical connector -arrow- for headlights on both sides.
– Pull off bonnet seal.

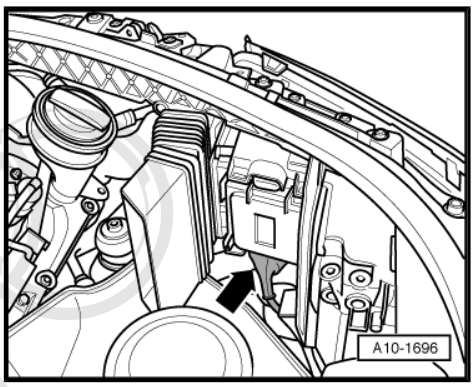

– Pull off retaining clip and remove top coolant hose -arrow- from radiator.

Protected by copyright. Copying for private or commercial purposes, in part or in whole, is not permitted unless authorised by AUDI AG. AUDI AG does not guarantee or assume any liability with respect to the correctness of information in this document. Copyright by AUDI AG.

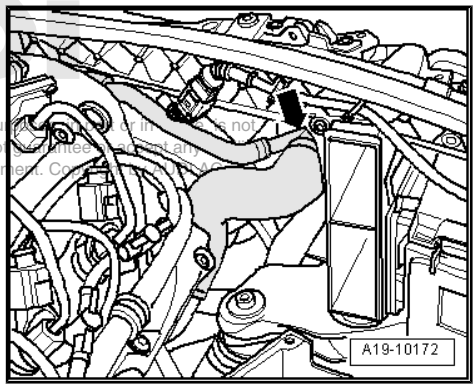

Note

To prevent damage to the refrigerant lines, ensure that the pipes and hoses are not stretched, kinked or bent.

– Remove refrigerant line from air conditioner compressor.
– Seal off open lines and connections with clean plugs from engine bung set - VAS 6122- .

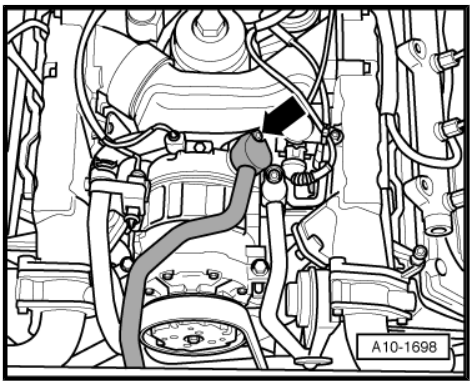

– Remove oil filler neck on cylinder head cover (left-side). To do so, lift tab -1- and turn oil filler neck clockwise -arrow-.

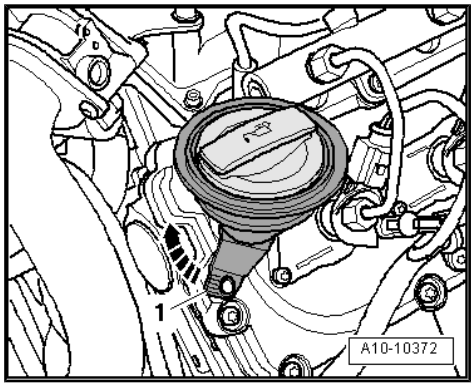

– Detach clamp -1- on reservoir.
– Detach refrigerant line -3- from reservoir.
– Unscrew bolts -2- and remove reservoir from lock carrier.
– Seal off open lines and connections with clean plugs from engine bung set - VAS 6122- .
– Fit oil filler neck on cylinder head cover (left-side).

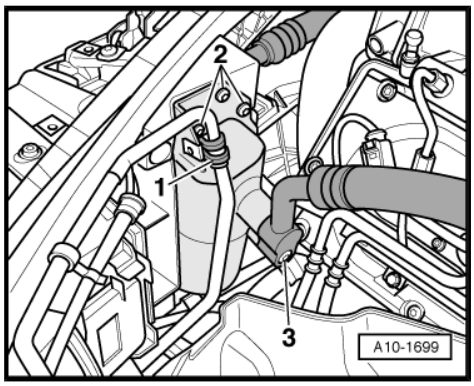

– Unplug electrical connector -arrow- going to radiator fan 2 - V177- .

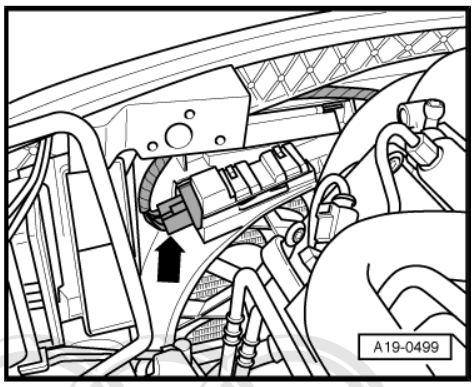

– Unplug electrical connector (left and right) -arrow- at bonnet lock and move wiring clear.

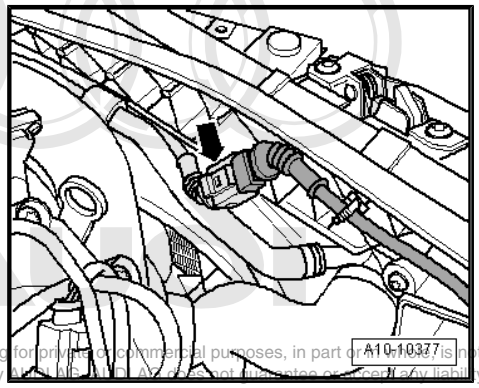

Protected by copyright. Copying for private or commercial purposes, in part or in whole, is not permitted unless authorised by AUDI AG. AUDI AG does not guarantee or accept any liability with respect to the correctness of information in this document. Copyright by AUDI AG.

– Detach cable junction for bonnet lock cables -1- from lock carrier.
– Open cable junction and detach both bonnet lock cables -2-.
– Move coolant line going to coolant expansion tank clear at lock carrier.

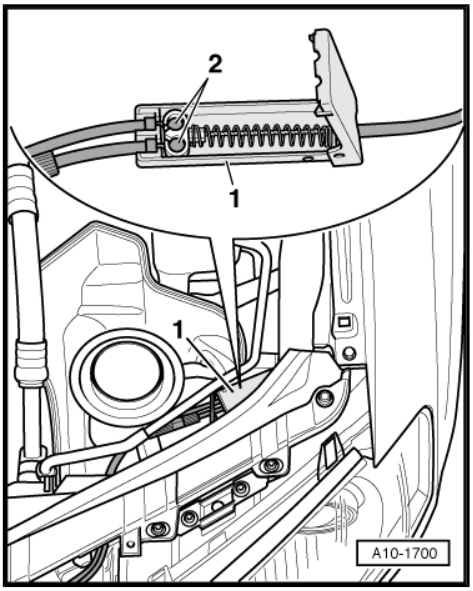

– Remove bolts -1-, -3- and -5-.
– Remove bolt -4- and nut -6-.
– Slacken hose clip -2- and detach air pipe.
– Detach air duct from charge air cooler (left-side).

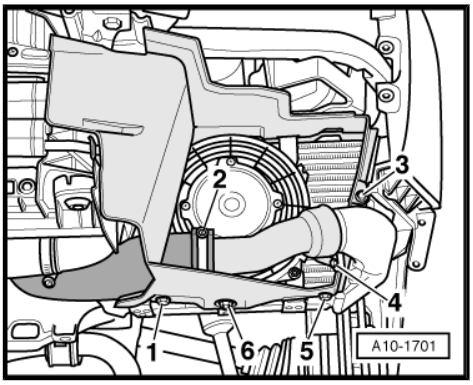

Protected by copyright. Copying for private or commercial purposes, in part or in whole, is not permitted unless authorised by AUDI AG. AUDI AG does not guarantee or accept any liability

– Extract hydraulic fluid for power steering from reservoir using used oil collection and extraction unit .
– Place used oil collection and extraction unit underneath.
– Detach hydraulic lines for power steering -2-.
– Detach refrigerant lines -1- from condenser.
– Seal off open lines and connections with clean plugs from engine bung set - VAS 6122- .

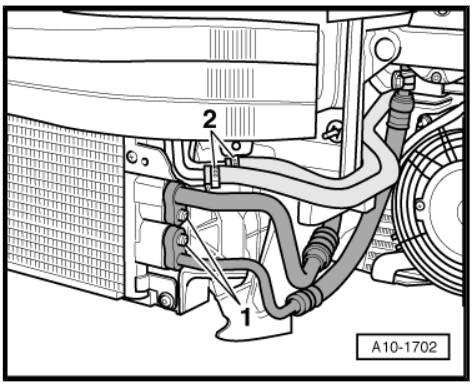

– Remove bolts -1-, -3- and -5-.
– Remove bolt -2- and nut -6-.
– Slacken hose clip -4- and detach air pipe with hose.
– Detach air duct from charge air cooler (right-side).

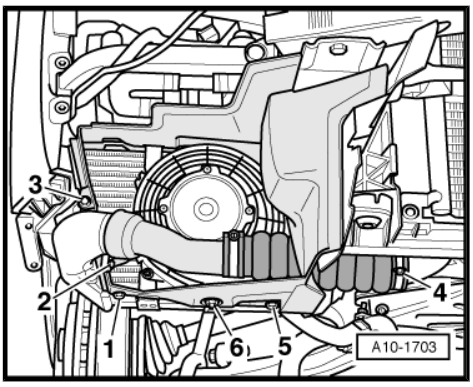

– Unplug electrical connector -arrow- for radiator fan - V7- and move wiring clear.

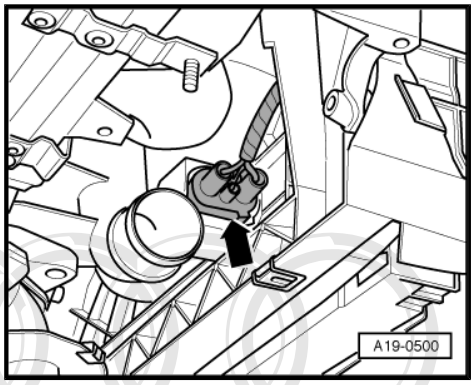

– Detach ambient temperature sensor - G17- -item 1- from bracket.
– Unplug electrical connectors -2 ... 4-.
– Remove adaptive cruise control unit - J428- -item 5- and unplug connector.
– Move electrical wiring harness clear.

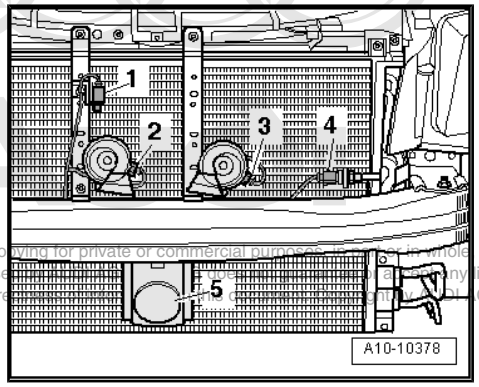

Protected by copyright. Copying for private or commercial purposes, in part or in whole, is not permitted unless authorised by AUDI AG. AUDI AG does not guarantee or assume any liability with respect to the correctness of information in this document. Copyright by AUDI AG.

– Unplug electrical connector -arrow- at front airbag crash sensor for driver side - G283- and -G284- under headlights at left and right.
– Move all wires clear at rear of lock carrier.

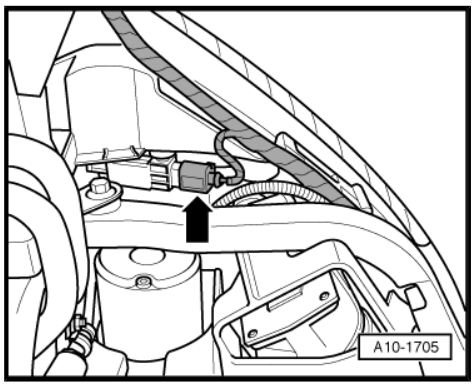

– Working from wheel housing, remove one nut -1- and one bolt -2- for lock carrier on each side.

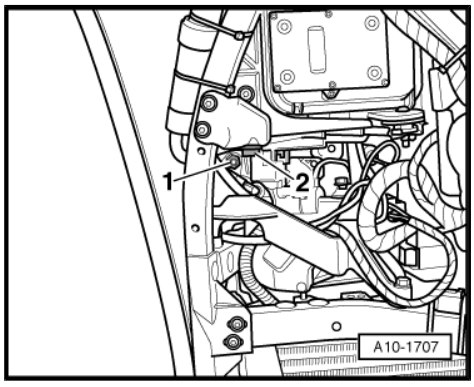

– Unscrew bolts -1 ... 5- (left and right).

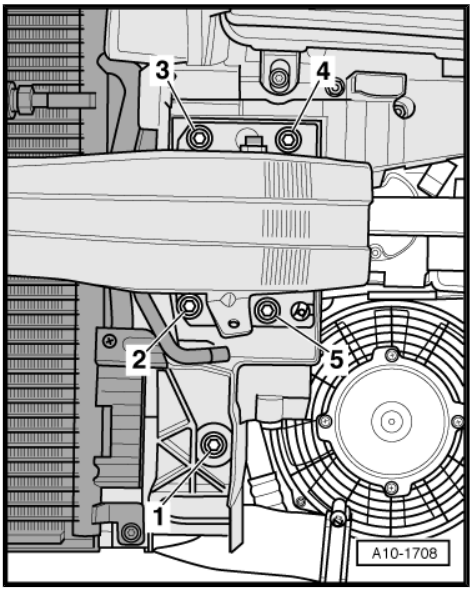

– Remove one bolt -arrow- on each side from top of lock carrier.
– Detach lock carrier.

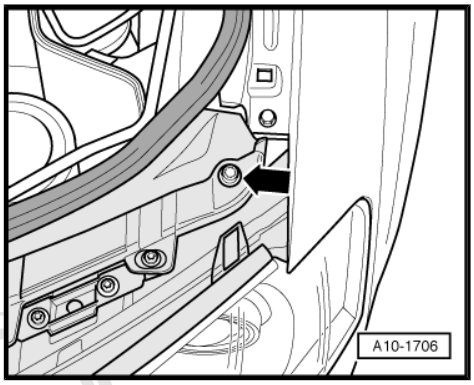

Note

A second mechanic is required for removing the lock carrier.

– Disconnect vacuum hose -arrow- leading to brake servo.

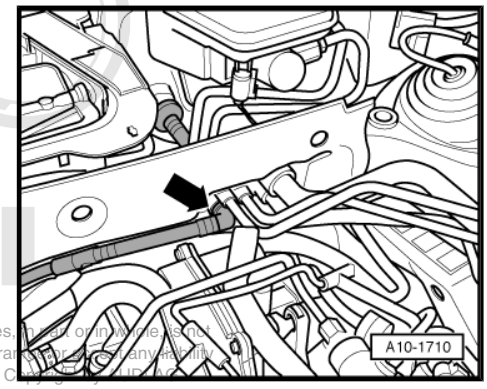

Protected by copyright. Copying for private or commercial purposes, in part or in whole is not permitted unless authorised by AUDI AG. AUDI AG does not guarantee or assume any liability with respect to the correctness of information in this document. Copyright by AUDI AG.

– Disconnect vacuum hose -arrow-.

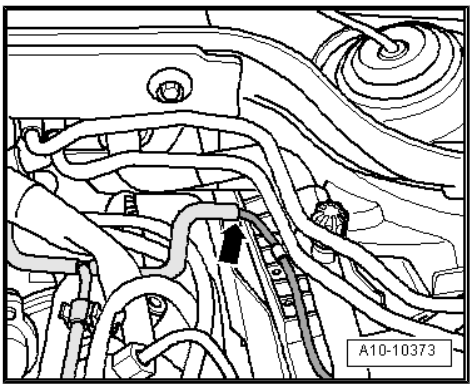

– Detach hydraulic pressure pipe -1- going to steering rack.
– Seal off open lines and connections with clean plugs from engine bung set - VAS 6122- .
– Unplug electrical connector -2- going to charge pressure sender - G31- .

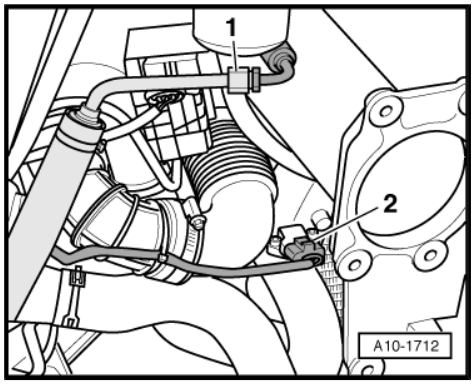

– Detach electrical connector -3- (if fitted).
– Remove bolts -1- and -2-.
– Remove bracket and mounting for torque reaction support.

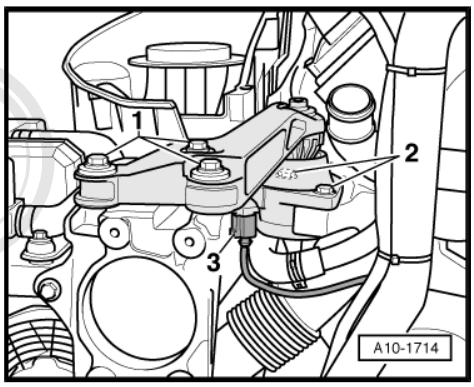

– Disconnect coolant hoses -1 ... 3-.
– Move coolant hoses to the side.

Protected by copyright. Copying for private or commercial purposes, in part or in whole, is not permitted unless authorised by AUDI AG. AUDI AG does not guarantee or accept any liability with respect to the correctness of information in this document. Copyright by AUDI AG.

> **Caution**
>
> *Rules for cleanliness when working on the injection system* *⇒ page 5* *.*

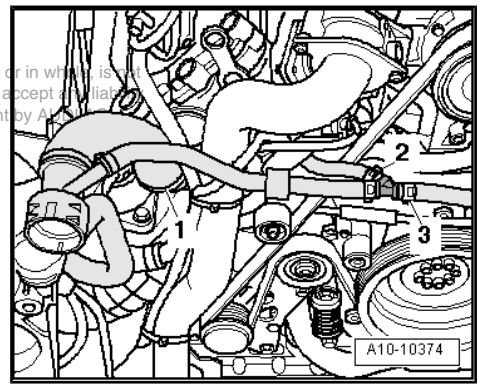

– Disconnect fuel return line -1- and fuel supply line -2- from fuel filter.
– Seal off open lines and connections with clean plugs from engine bung set - VAS 6122- .

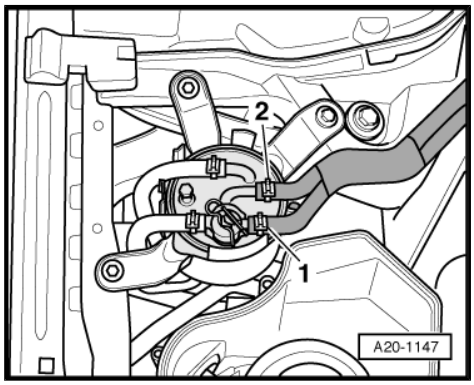

– Pull off rubber seal -1- on plenum chamber covers.
– Detach plenum chamber covers -2- and -3-.

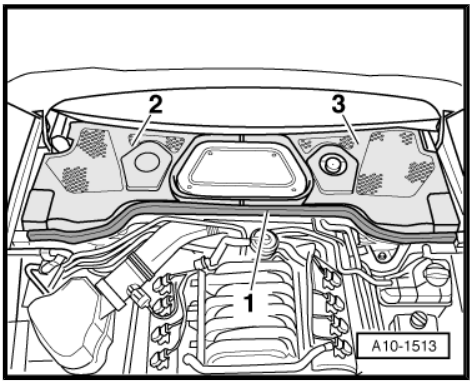

– Use screwdriver to pry off caps on wiper arms and slacken off nuts -arrows- several turns.

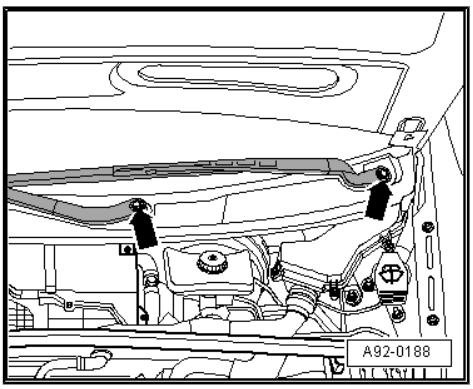

– Apply puller - T10369/1- to wiper arm -1-, as shown in illustration.
– Apply thrust piece -2- onto wiper shaft.
– Turn bolt -3- in clockwise direction until wiper arm is pulled off wiper shaft.
– Remove nuts completely and take off wiper arms.
– Remove dust and pollen filter ⇒ Rep. gr. 87 .

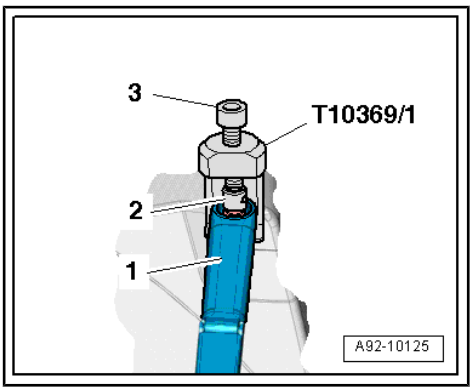

Note

Cover air duct at air conditioner housing with clean cloth to prevent anything falling in.

– Unscrew bolts on left and right -arrows- for cowl panel grille -1-.
– Carefully pull cowl panel grille off retainer at windscreen.

Protected by copyright. Copying for private or commercial purposes, in part or in whole, is not permitted unless authorised by AUDI AG. AUDI AG does not guarantee or accept any liability with respect to the correctness of information in this document. Copyright by AUDI AG.

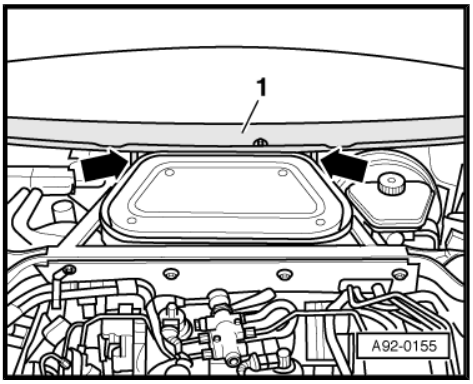

– Unscrew body brace -arrow-.

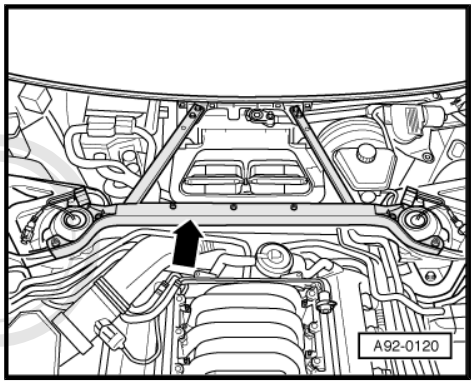

– Unclip covers for engine control units.
– Detach engine control units -1- and -2- from electronics box in plenum chamber and from bracket -arrows-.

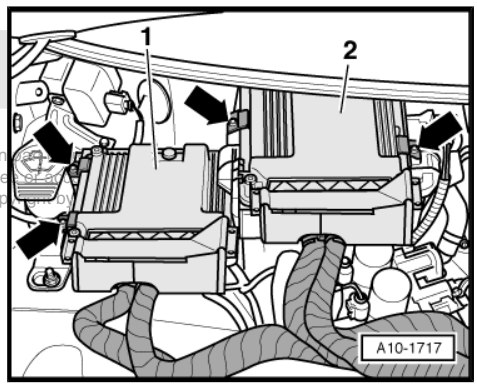

Protected by copyright. Copying for private or commercial purposes, in part or in whole, is not permitted unless authorised by AUDI AG. AUDI AG does not guarantee or assume any liability with respect to the correctness of information in this document. Copyright by AUDI AG.

Note

The electrical wires remain connected.

– Turn air quality sensor - G238- approx. 90° anti-clockwise -arrow- and remove from retainer.
– Release retaining clips -1 ... 4-.
– Open electronics box (plenum chamber) cover slightly and pull off to front.

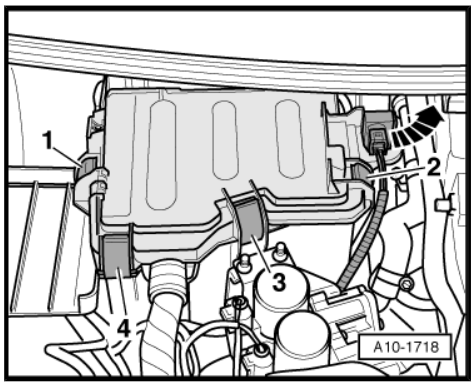

– Disconnect the electrical multi-pin connectors -1- using spark plug connector pliers - V.A.G 1922- .
– Release retainers -arrows- and push auxiliary relay carrier in electronics box upwards to remove.

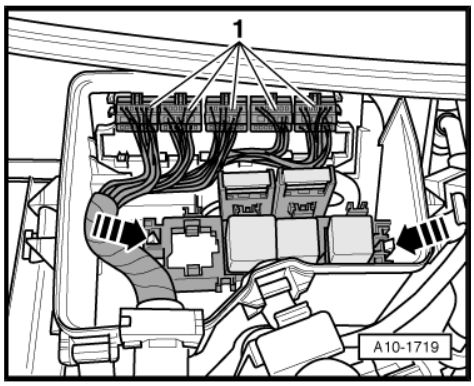

– Disconnect relay -item 2- and unclip socket from relay carrier.
– Release both fuse holders -1- and -3- from relay carrier and pull off from above.
– Pull off fuses.

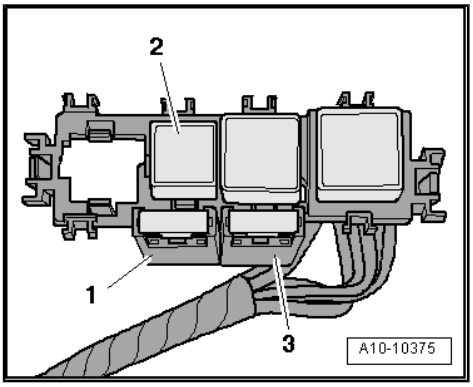

Note

Make sure to fit each wire in its original position when connecting (apply a marking on each wire for allocation).

– Release contact in chamber “2” of each fuse holder using release tool - VAS 1978/8A- .
– Place engine control units with wiring harness attached on top of engine.

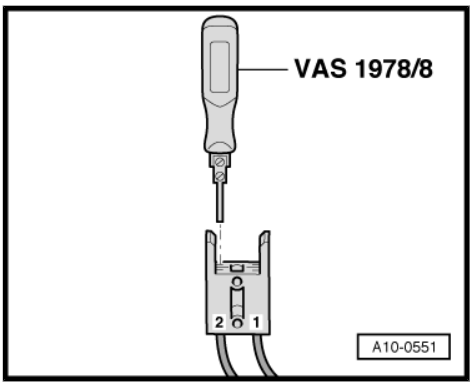

Note

Secure the engine control units to prevent them falling.

– Disconnect coolant hose at bulkhead -arrow-.

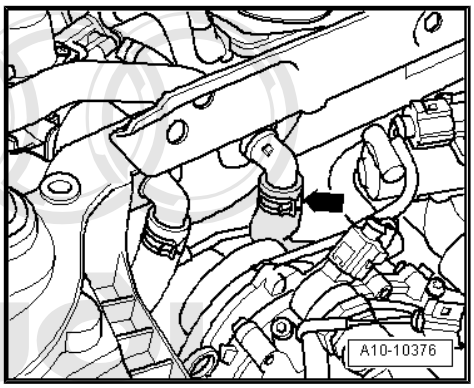

– Disconnect coolant hose from coolant pipe next to drive shaft (left-side) -arrow-.

Protected by copyright. Copying for private or commercial purposes, in part or in whole, is not permitted unless authorised by AUDI AG. AUDI AG does not guarantee or accept any liability with respect to the correctness of information in this document. Copyright by AUDI AG.

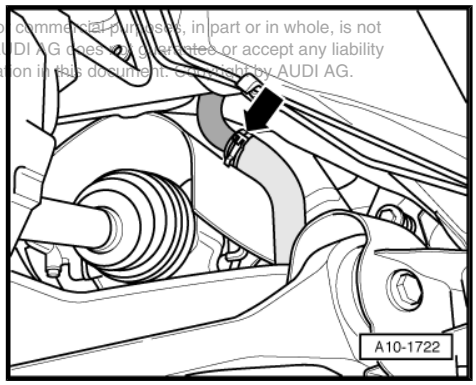

– Remove bolts -arrows- and detach bracket for charge air cooler.
– Take off charge air cooler -1- (left-side).

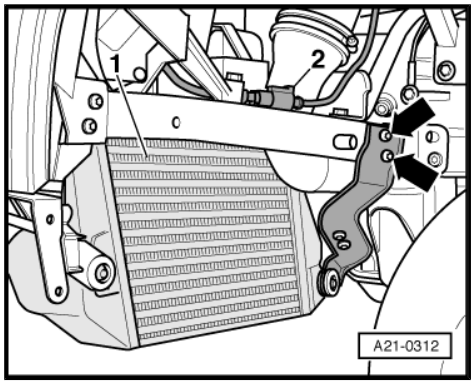

Note

Disregard -item 2-.

– Unscrew securing bolt -2- and securing bolt -4-.
– Loosen hose clips -1- and -3- and remove air intake hose between air cleaner housing and turbocharger (left-side).

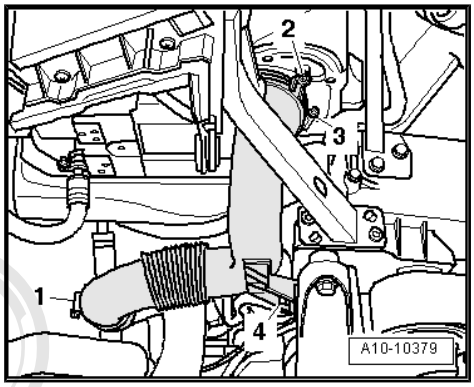

Note

Lay a cloth under the separating point to catch escaping hydraulic fluid.

– Disconnect hydraulic hose -arrow- at bottom of hydraulic fluid reservoir.

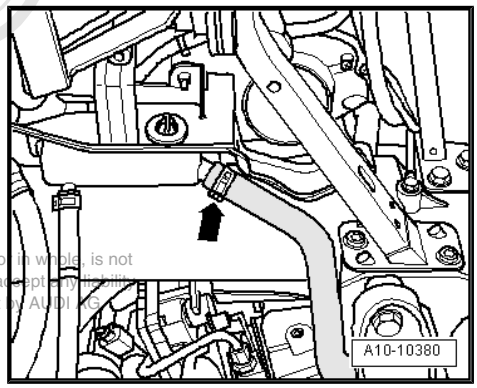

Protected by copyright. Copying for private or commercial purposes, in part or in whole, is not permitted unless authorised by AUDI AG. AUDI AG does not guarantee or accept any liability with respect to the correctness of information in this document. Copyright by AUDI AG.

– Detach air intake hose -arrow- from charge air cooler (right-side).

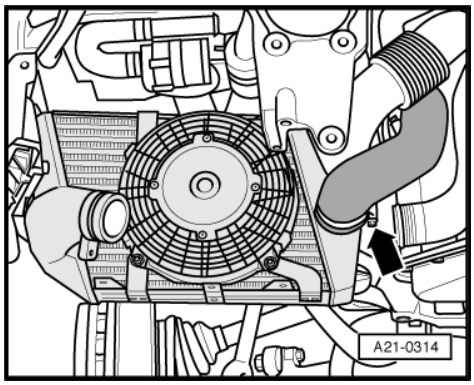

– Remove bolts -arrows- and detach bracket for charge air cooler.
– Take off charge air cooler -2- (right-side).

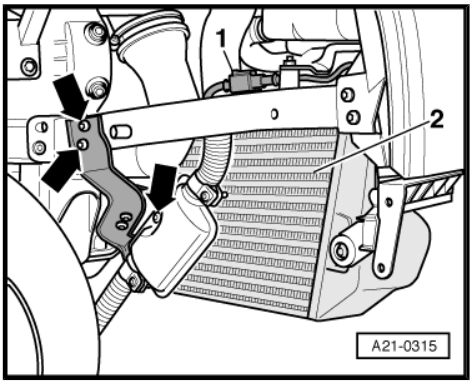

Note

Disregard -item 1-.

– Detach crankcase breather hose -arrow-.

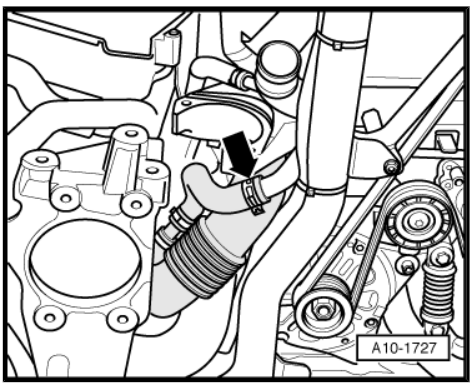

– Unplug electrical connector for heater element for crankcase breather - N79- -item 3-.
– Unscrew securing bolt -2- and securing bolt -5-.
– Loosen hose clips -1- and -4- and remove air intake hose between air cleaner housing and turbocharger (right-side).

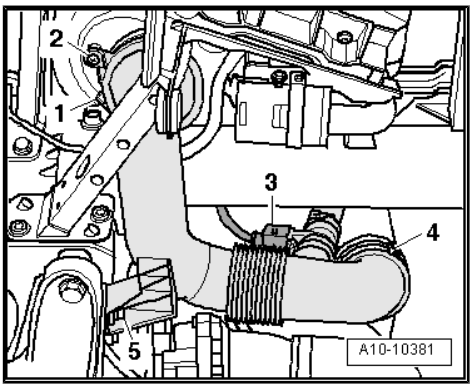

– Remove bottom A-pillar trim (right-side) ⇒ Rep. gr. 70 .
– Fold back floor carpet.
– Detach retaining bracket above main fuse box.
– Fold cover -2- to side.
– Remove nut -4-.
– Detach terminal 30 wire to starter.

Protected by copyright. Copying for private or commercial purposes, in part or in whole, is not permitted unless authorised by AUDI AG. AUDI AG does not guarantee or accept any liability with respect to the correctness of information in this document. Copyright by AUDI AG.

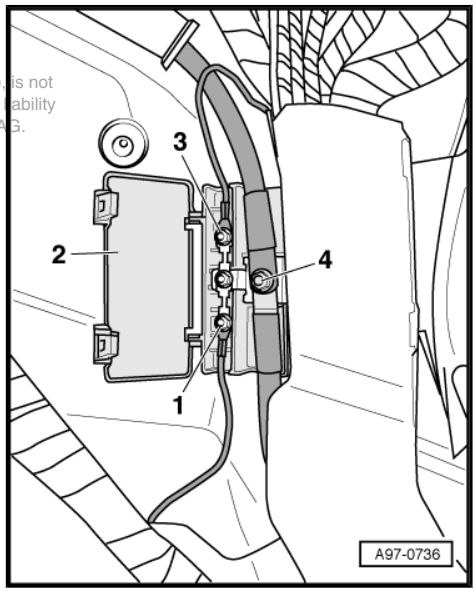

Note

Disregard items -1- and -3-.

– Unscrew clamp -1-.
– Unscrew retaining nut -2- for track rod cover.

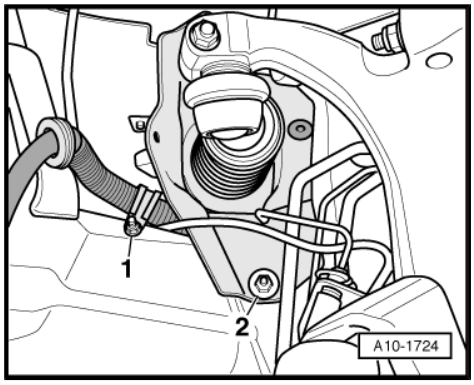

– Unplug electrical connector -2-.
– Unbolt earth cable -1- at longitudinal member.
– Unbolt bracket for wiring harness from longitudinal member -arrows-.
– Move electrical wiring harness clear.

Protected by copyright. Copying for private or commercial purposes, in part or in whole, is not permitted unless authorised by AUDI AG. AUDI AG does not guarantee or accept any liability with respect to the correctness of information in this document. Copyright by AUDI AG.

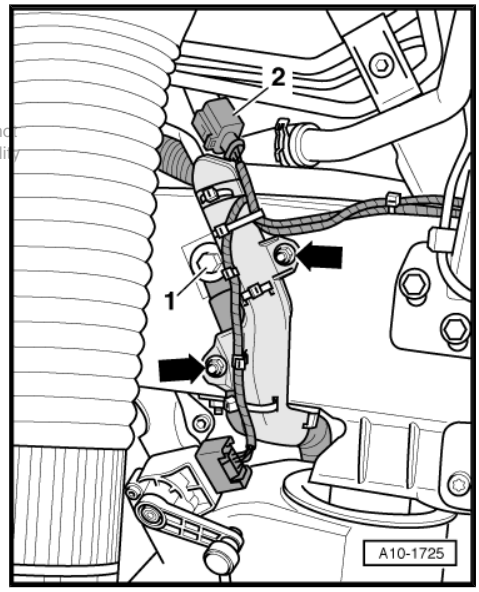

– Unplug electrical connector -2- at vehicle level sender.
– Detach coupling rod -1- at track control link.
– Repeat procedure on other side of vehicle.

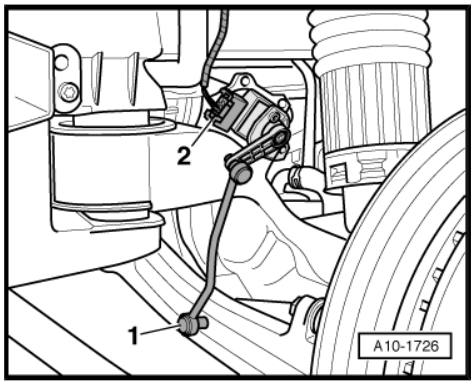

– Unbolt cross piece (front) -arrows-.

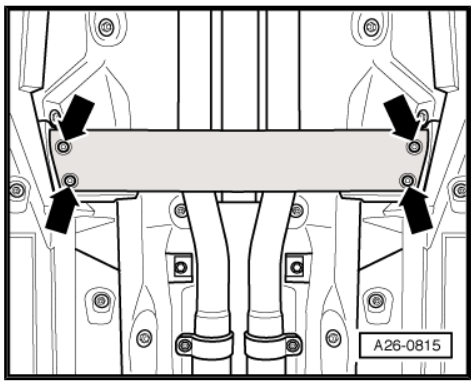

– Loosen clamps -1- and -2-.

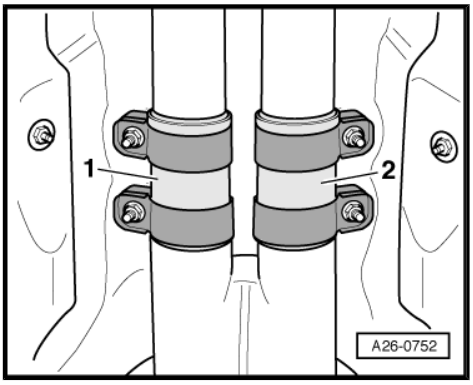

Protected by copyright. Copying for private or commercial purposes, in part or in whole, is not permitted unless authorised by AUDI AG. AUDI AG does not guarantee or accept any liability with respect to the correctness of information in this document. Copyright by AUDI AG.

– Loosen union nut -1- and unclip pressure pipe at main catalytic converter (left-side).
– Loosen union nut -3- and detach pressure pipe at exhaust pipe.
– Unscrew temperature sender 2 before particulate filter - G498- -item 2- from particulate filter/main catalytic converter (left-side).

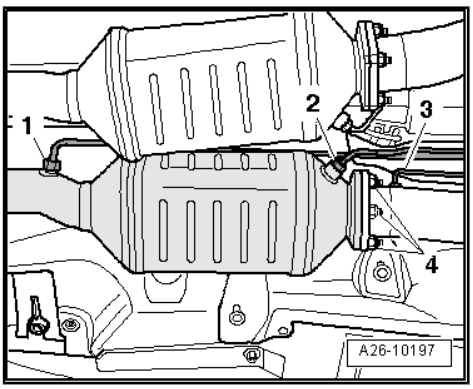

Note

Disregard -item 4-.

– Loosen union nut -4- and unclip pressure pipe at particulate filter/main catalytic converter (right-side).
– Loosen union nut -2- and detach pressure pipe at exhaust pipe.
– Unscrew temperature sender before particulate filter - G506- -item 3- from particulate filter/main catalytic converter (right-side).

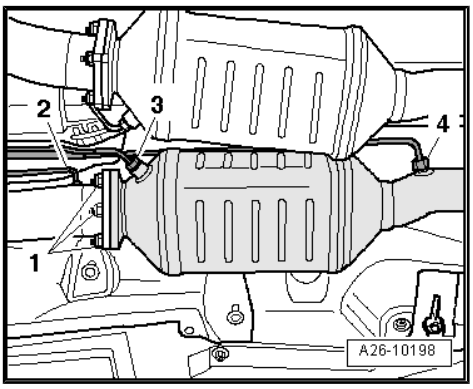

Note

Disregard -item 1-.

– Remove nuts on left and right -arrows- at centre bracket for exhaust pipes.

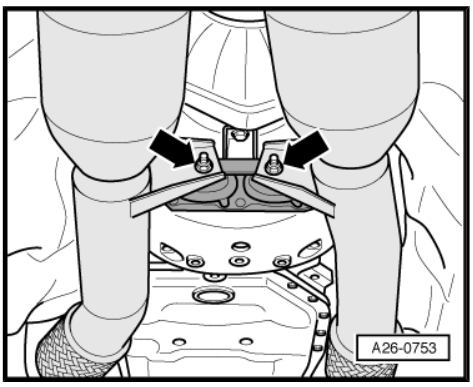

– Unbolt exhaust pipe (left-side) from starter catalytic converter -arrows-.
– Detach particulate filter/main catalytic converter (left side) with exhaust pipe.

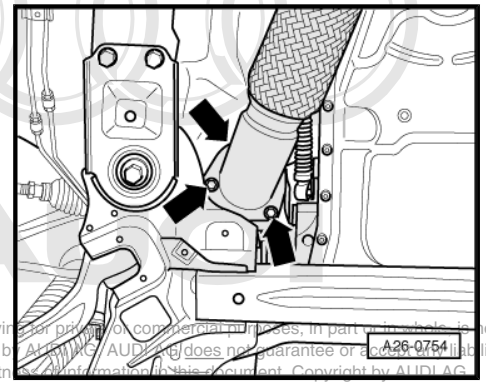

Protected by copyright. Copying for private or commercial purposes, in part or whole, is not permitted unless authorised by AUDI AG. AUDI AG does not guarantee or accept any liability with respect to the correctness of information in this document. Copyright by AUDI AG.

– Unbolt exhaust pipe (right-side) from starter catalytic converter -arrows-.
– Detach particulate filter/main catalytic converter (right side) with exhaust pipe.

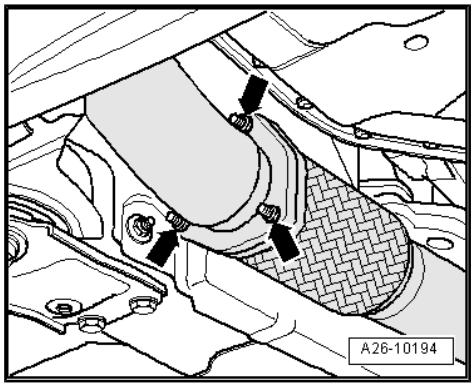

– Unscrew heat shield -A- for propshaft -arrows-.
– Unscrew bolts at gearbox/propshaft flange.
– Push propshaft back towards rear final drive. The constant velocity joints can be moved axially.
– Tie up propshaft to body.

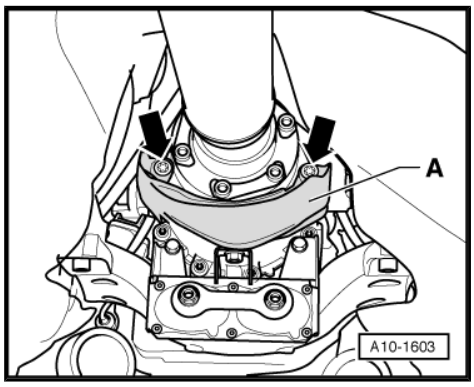

– Pry ball socket -1- of selector lever cable off selector shaft lever using removal lever - 80 - 200- .
– Unclip retaining clip -2- at support bracket for selector lever cable.
– Detach selector lever cable.

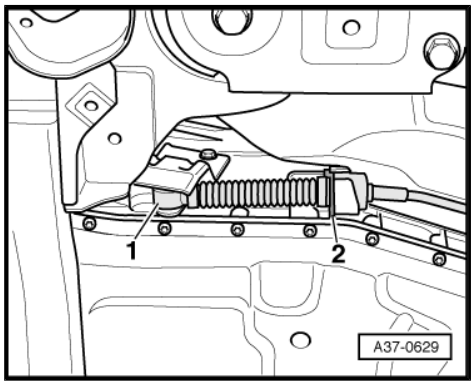

– Unscrew heat shields for drive shafts (left and right) from gearbox -arrows-.
– Unbolt drive shafts (left and right) from gearbox flanges.

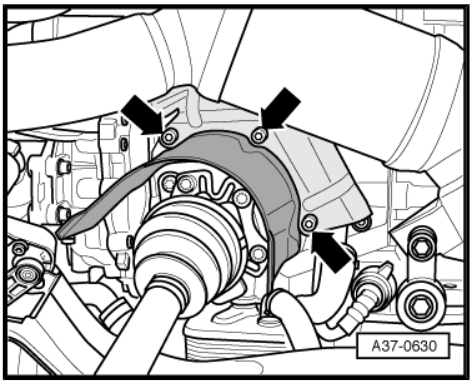

– Have a 2nd mechanic press the brake pedal.

> ⚠ **Caution**
>
> *When slackening the flange bolt securing the drive shaft, the wheel bearing must not be under load (vehicle must not be standing on its wheels).*

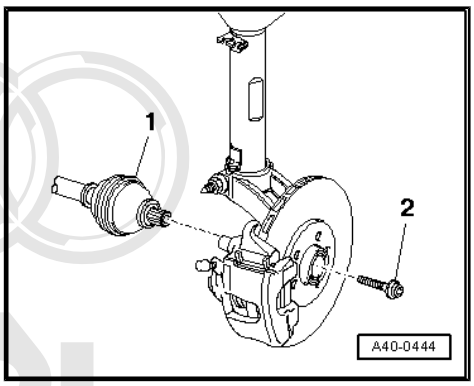

– Unscrew flange bolt -2- from drive shaft -1- (left and right).
– Take out drive shafts (left and right).

– Remove bolts (left and right) -arrows- evenly and detach anti-roll bar.

Protected by copyright. Copying for private or commercial p
permitted unless authorised by AUDI AG. AUDI AG does n
with respect to the correctness of information in this doc

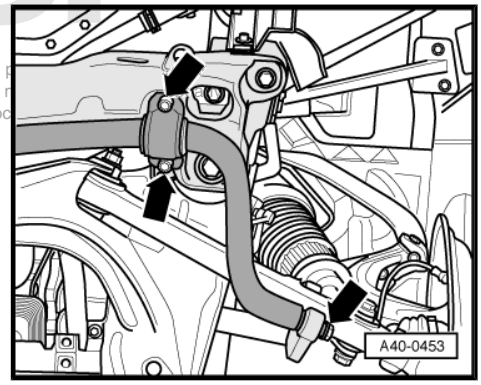

> ⚠ **Caution**
>
> *To prevent damage to the joints on the upper links, the weight of the wheel bearing housings must be supported before slackening the bottom securing bolts for the suspension struts.*

– Fit eye-head bolt - 3368- from below in bore on suspension turret on both sides.
– Secure eye-head bolts - 3368- with nut -2- and washer -1- (screw down nut several turns but not all the way down).
– Tie up wheel bearing housing on each side using tensioning strap - T10038- as illustrated.

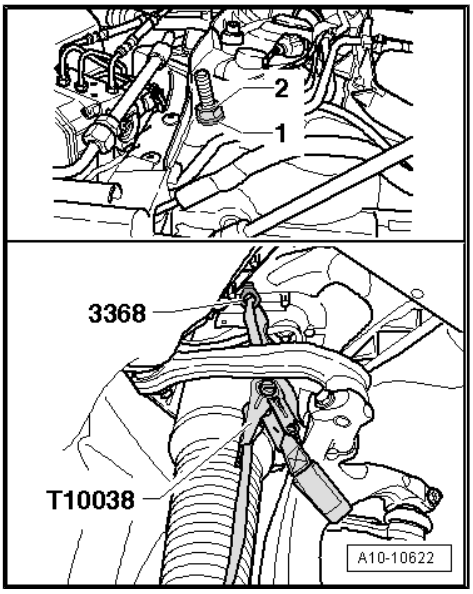

– Unbolt air spring struts (left and right) from track control links -arrow-.

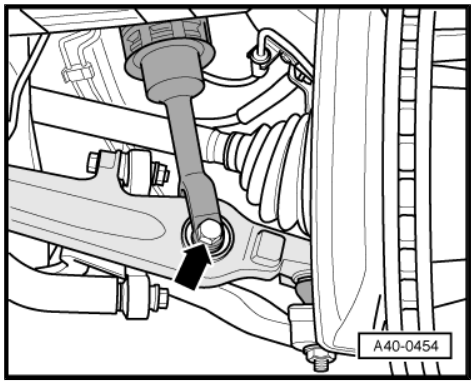

– Unbolt guide link -1- and track control link -2- at subframe.

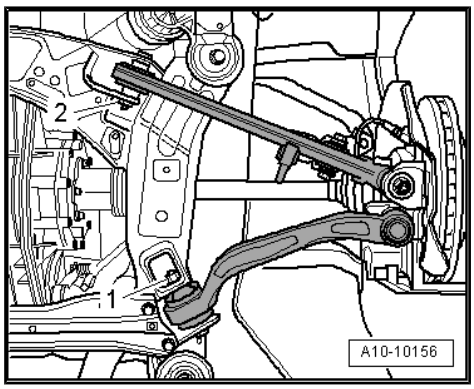

– Pivot guide link -1- and track control link -2- outwards.

> **Caution**
>
> *The guide link and track control link must not be allowed to hang down without support. Tie up both bottom links to wheel bearing housing as illustrated -arrow-.*

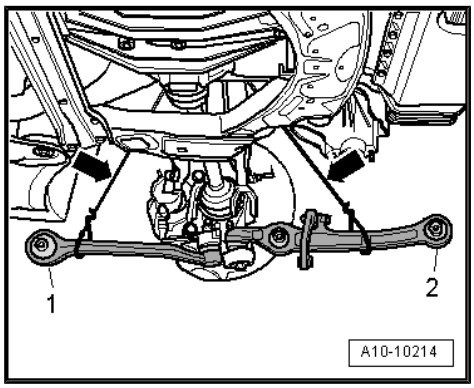

– Repeat procedure on other side of vehicle.

Protected by copyright. Copying for private or commercial purposes, in part or in whole, is not permitted unless authorised by AUDI AG. AUDI AG does not guarantee or accept any liability with respect to the correctness of information in this document. Copyright by AUDI AG.

Set up the scissor-type assembly platform as follows:

– Set up scissor-type assembly platform - VAS 6131 A- with support set for Audi - VAS 6131/10- as follows:

Platform co-ordinates	Parts from support set for Audi - VAS 6131/10-			
C3	/10-1	/10-4	/10-5	/10-6
G3	/10-1	/10-4	/10-5	/10-6
B6	/10-1	/10-3	/10-5	/10-7
G6	/10-1	/10-3	/10-5	/10-7
B10	/10-1	/10-2	/10-5	/10-8
G10	/10-1	/10-2	/10-5	/10-8
D16	/10-1	/10-4	/10-5	/10-9
G15	/10-1	/10-4	/10-5	/10-10

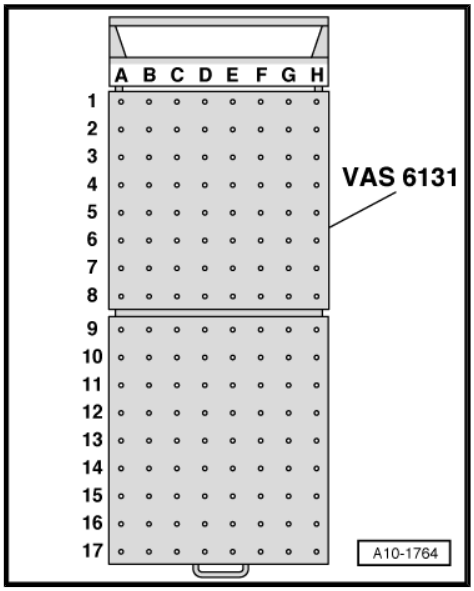

– Initially tighten the support elements on the assembly platform only hand-tight.

– Adjust the scissor-type assembly platform - VAS 6131 A- so that it is horizontal.

• Take note of spirit level (bubble gauge).

– Place scissor-type assembly platform - VAS 6131 A- under engine/gearbox assembly.

– Position support elements from -VAS 6131/10- at front of engine, as shown in illustration.

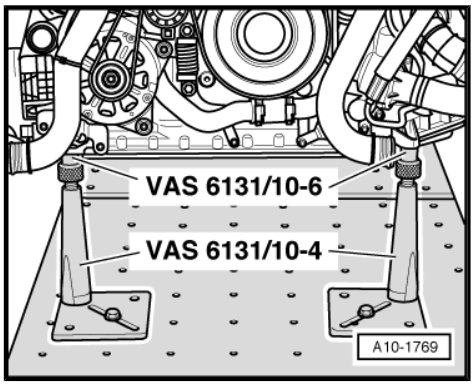

– Position support elements from -VAS 6131/10- on engine cross member and subframe (left and right), as shown in illustration.

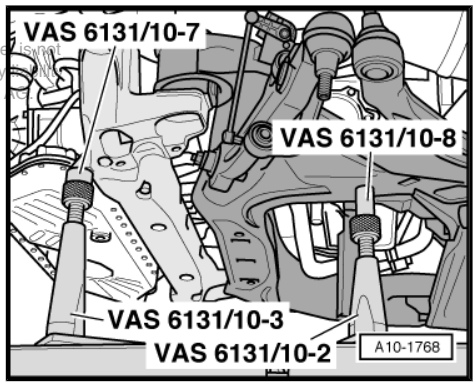

Reproduction or duplication of this document or any part of it is not permitted or in whole without permitted unless authorised by AUDI AG. AUDI AG does not guarantee or accept any liability with respect to the correctness of information in this document. Copyright by AUDI

– Position support elements from -VAS 6131/10- at rear of gearbox, as shown in illustration.
– Turn all spindles for the support elements upwards until all locating lugs make contact with the mounting points.
– When all support elements make contact, raise assembly platform until load is taken off engine and gearbox mountings.
– Tighten base plates for support elements on scissor-type assembly platform - VAS 6131 A- to 20 Nm.

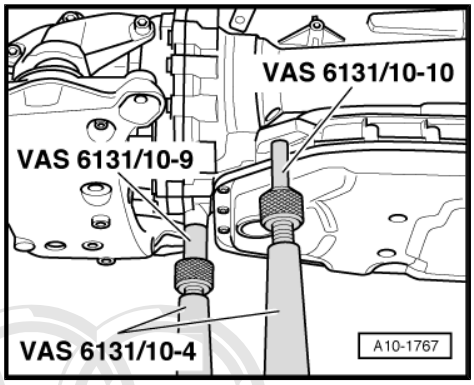

– Remove bolts -arrows- at tunnel cross member.

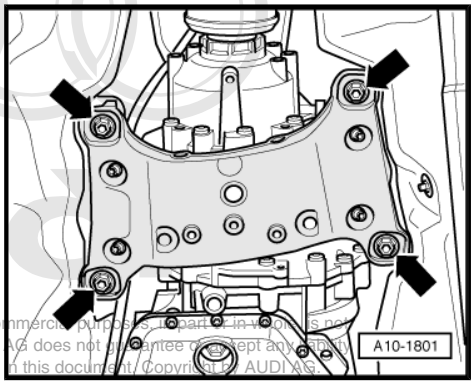

Protected by copyright. Copying for private or commercial purposes, in part or in whole, is not permitted unless authorised by AUDI AG. AUDI AG does not guarantee or accept any liability with respect to the correctness of information in this document. Copyright by AUDI AG.

– Mark the installation position of subframe with a felt-tip pen on longitudinal member.
– Remove bolts -1- and -4-.
– Remove bolts -2- and -3- in a diagonal sequence and in stages.

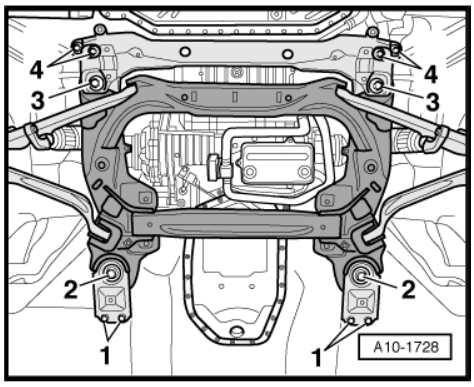

Note

- *Check that all hoses and wiring connections between engine, gearbox, subframe and body have been detached.*
- *Carefully guide out engine/gearbox assembly with subframe from engine compartment when lowering to avoid damage.*

– Lower engine/gearbox assembly gradually.
– Pull out scissor-type assembly platform - VAS 6131 A- from under the vehicle.

2 Separating engine and gearbox

Special tools and workshop equipment required

♦ Adapter - T40058-

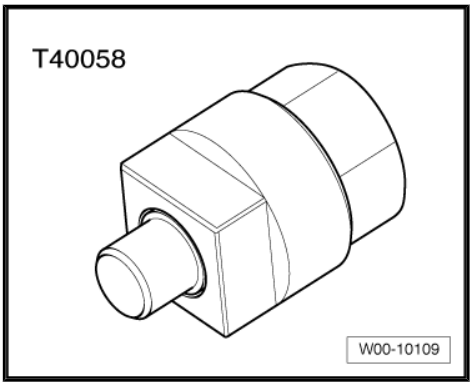

Procedure

• Engine/gearbox assembly removed and secured to scissor-type assembly platform - VAS 6131 A-

– Remove bolts -arrows- for front gearbox mountings (left and right).

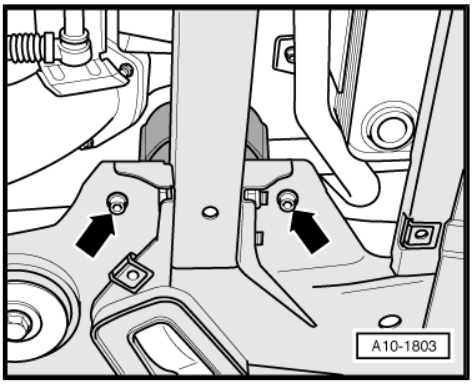

Protected by copyright. Copying for private or commercial purposes, in part or in whole, is not permitted unless authorised by AUDI AG. AUDI AG does not guarantee or accept any liability with respect to the correctness of information in this document. Copyright by AUDI AG.

– Screw down spindles of support elements -2- (left and right) at subframe as far as possible.

– Remove locating lugs from spindles.

– Take out subframe -3- from the side.

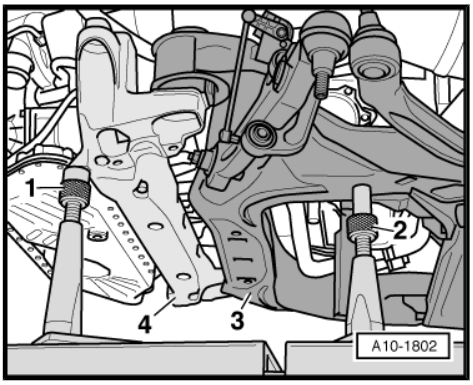

Note

A second mechanic is required for removing the subframe.

– Screw down spindles of support elements -1- (left and right) at engine cross member -4- as far as possible.

– Remove bolts for engine mountings -arrows- on both sides.

– Take out engine cross member.

– Unscrew the 4 base plates for support elements (for engine cross member and subframe) at assembly platform - VAS 6131 A- .

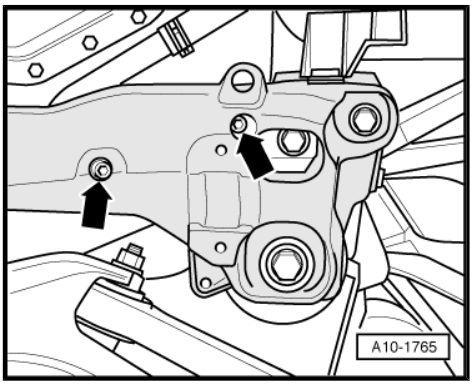

Note

The mounting points for engine (front) and gearbox (rear) remain unchanged.

– Set up scissor-type assembly platform - VAS 6131 A- with support set for Audi - VAS 6131/10- as follows:

Platform co-ordinates	Parts from support set for Audi - VAS 6131/10-			
C3 1)	/10-1	/10-4	/10-5	/10-6
G3 1)	/10-1	/10-4	/10-5	/10-6
D7	/10-1	/10-4	/10-5	/10-11 2)
F7	/10-1	/10-4	/10-5	/10-11
B11	/10-1	/10-4	/10-5	/10-12
G11	/10-1	/10-3	/10-5	/10-13
D16 1)	/10-1	/10-4	/10-5	/10-9
G15 1)	/10-1	/10-4	/10-5	/10-10

- 1) Support elements remain unchanged.
- 2) Two washers (total height: 3 mm) must also be placed on the support element.

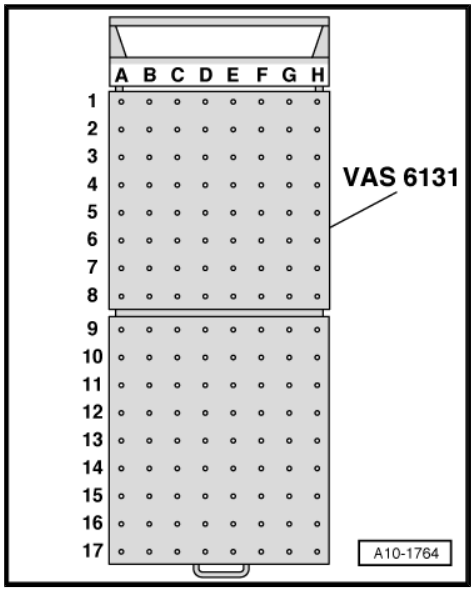

– Remove bolt -2- on engine/gearbox flange (bottom left).

– Place two washers -1- (total height: 3 mm) on locating lug for support element at rear left of engine.

– Position support elements from -VAS 6131/10- at rear left of sump (top section), as shown in illustration.

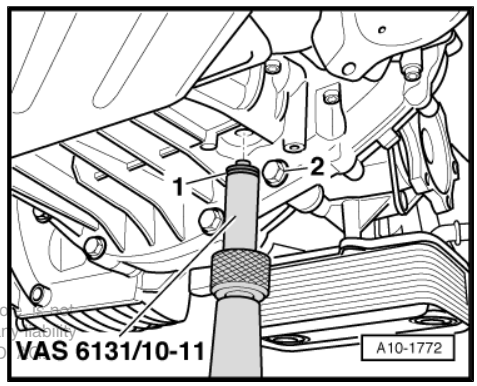

Protected by copyright. Copying for private or commercial purposes, in part or in whole, is not permitted unless authorised by AUDI AG. AUDI AG does not guarantee or accept any liability with respect to the correctness of information in this document. Copyright by AUDI AG.

– Position support elements from -VAS 6131/10- at left of engine/gearbox assembly, as shown in illustration.

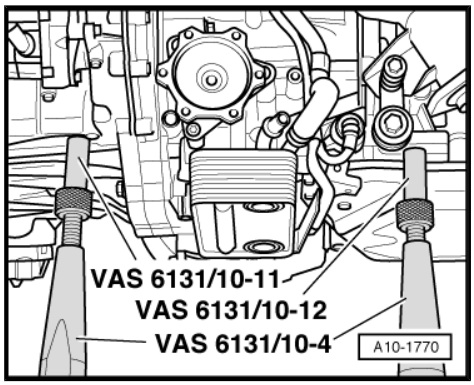

– Position support elements from -VAS 6131/10- at right of engine/gearbox assembly, as shown in illustration.

– Turn spindles for the support elements upwards until all locating lugs make contact with the mounting points.

– Tighten base plates for support elements on scissor-type assembly platform - VAS 6131 A- to 20 Nm.

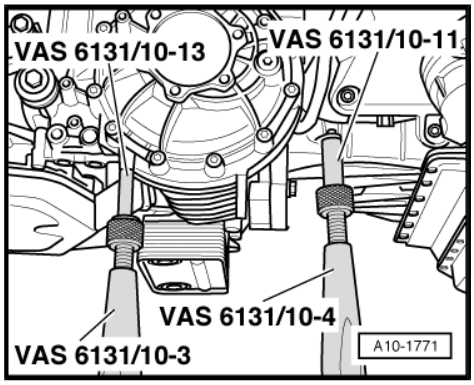

– Unplug electrical connectors:

1 - Temperature sender 2 before particulate filter - G498-

2 - Pressure differential sender - G505-

3 - Temperature sender before particulate filter - G506-

4 - Pressure differential sender 2 - G524-

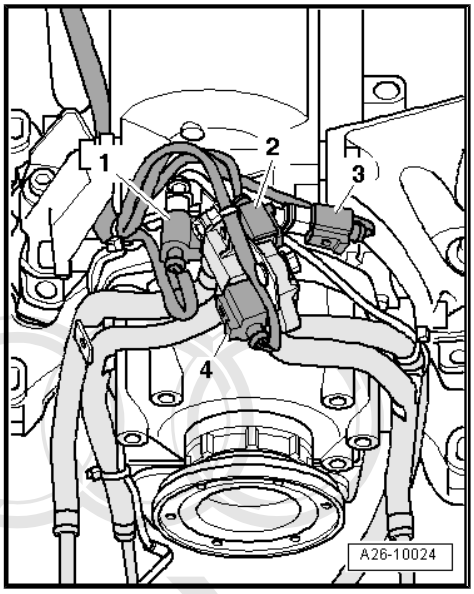

– Remove bolts -arrows-.

– Move electrical wiring harness clear.

Protected by copyright. Copying for private or commercial purposes, in whole or in part, is not permitted unless authorised by AUDI AG. AUDI AG does not guarantee or accept any liability with respect to the correctness of information in this document. Copyright by AUDI AG.

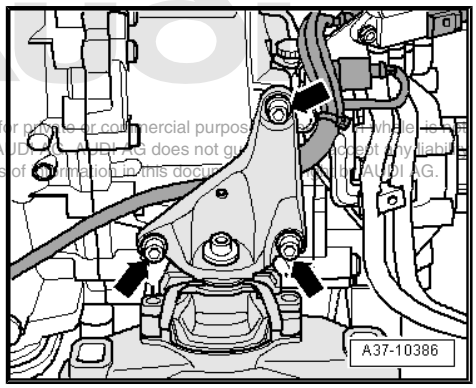

– Detach electrical connector for bank 2 exhaust gas temperature sender 2 - G449- -item 3- and Lambda probe 2 - G108- -item 2- from retainer.

– Unplug electrical connectors and move wiring clear.

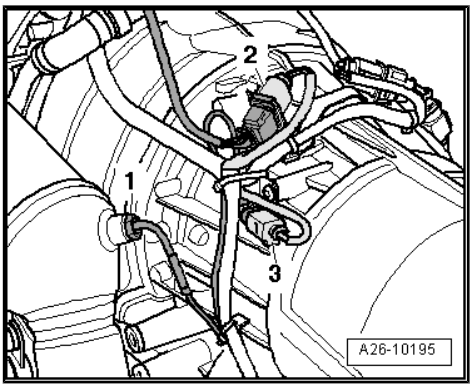

– Unbolt bracket for starter catalytic converter -top arrow-.

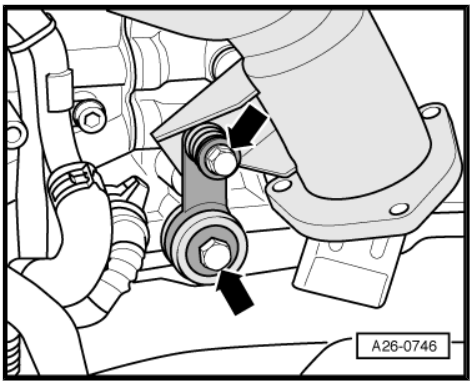

– Unscrew nuts -arrows- securing starter catalytic converter to turbocharger.
– Detach starter catalytic converter (left-side).

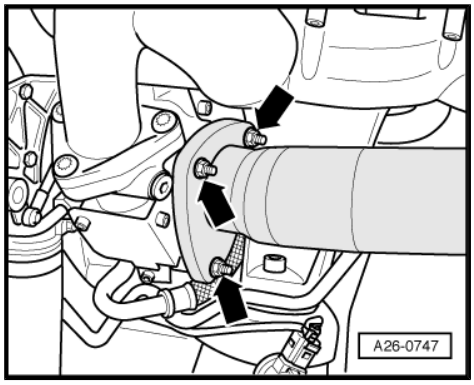

Note

Lay a cloth under the connection to catch escaping coolant.

– Detach coolant hose from coolant pipe -arrow-.

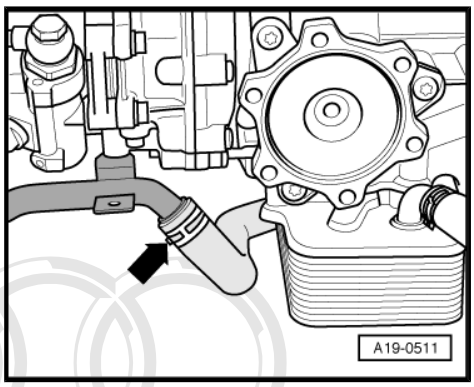

– Detach coolant pipe from coolant hose -1-.

Note

Disregard -item 2-.

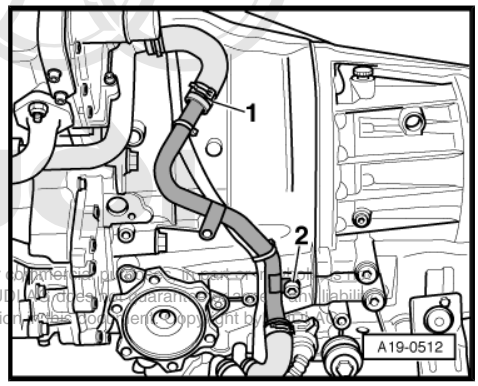

Protected by copyright. Copying for private or commercial purposes, in part or in whole, is not permitted unless authorised by AUDI AG. AUDI AG does not guarantee or assume any liability with respect to the correctness of information. Alle Rechte vorbehalten. Copyright by AUDI AG.

– Turn retainer catch anti-clockwise -arrow- and unplug electrical connector at gearbox.

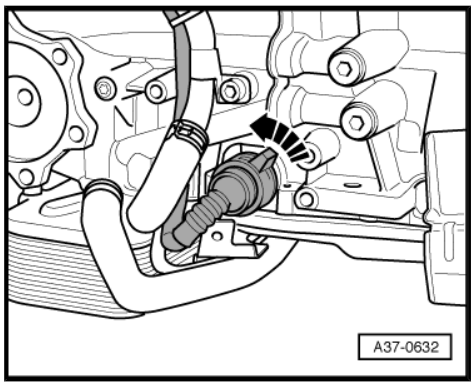

– Unplug electrical connector -2- leading to engine speed sender - G28- .

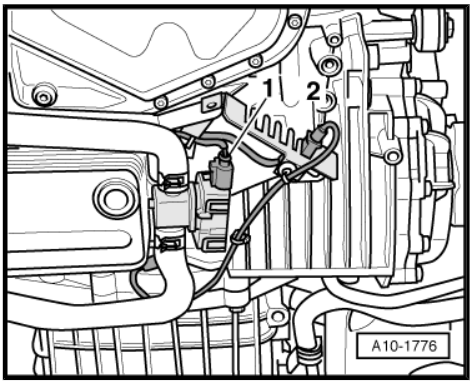

Note

Disregard -item 1-.

– Move electrical wiring harness clear.

– Detach electrical connector for exhaust gas temperature sender 2 - G448- -item 1- and Lambda probe - G39- -item 2- from retainer.

– Unplug electrical connectors and move wiring clear.

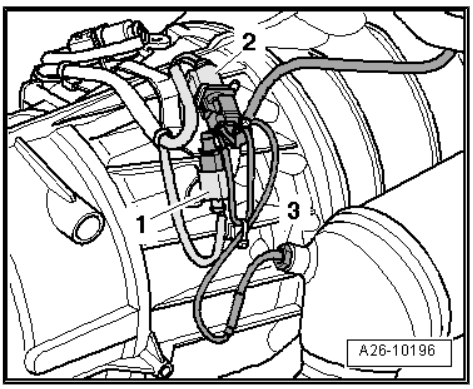

Note

Protected by copyright. Copying for private or commercial purposes, in part or in whole, is not permitted unless authorised by AUDI AG. AUDI AG does not guarantee or accept any liability with respect to the correctness of information in this document. Copyright by AUDI AG.

Disregard -item 3-.

– Unbolt bracket for starter catalytic converter (right-side) -top arrow-.

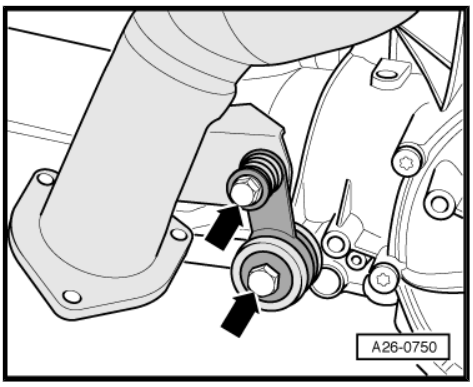

– Unscrew nuts -arrows- securing starter catalytic converter to turbocharger.

– Detach starter catalytic converter (right-side).

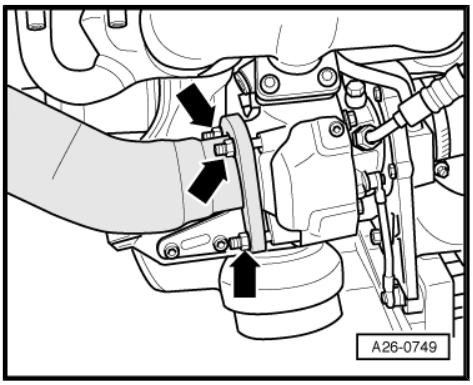

– Remove bolts -2- and -3- and detach support for turbocharger.
– Unscrew bolts -1- and remove bracket for wiring harness.

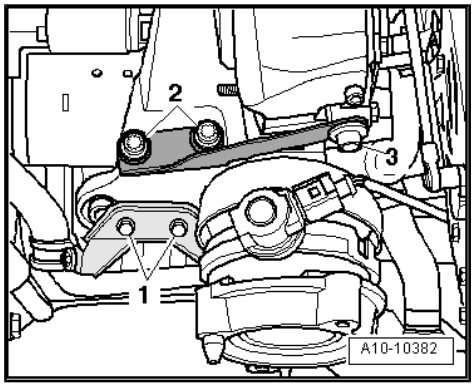

– Unplug electrical connector -1- at engine mounting (right-side).
– Remove bolts -arrows-.
– Remove engine support with engine mounting.

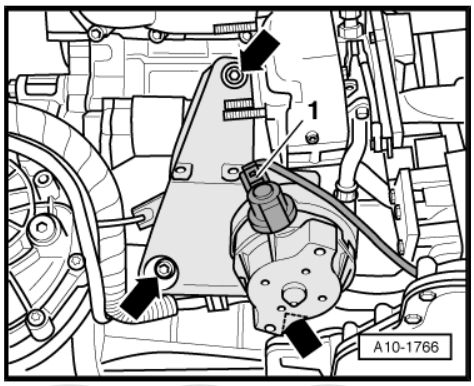

– Remove bolts -4- and -6-.
– Detach electrical wires -2- and -3- at starter.
– Remove bolts -1- and -7- and detach starter.

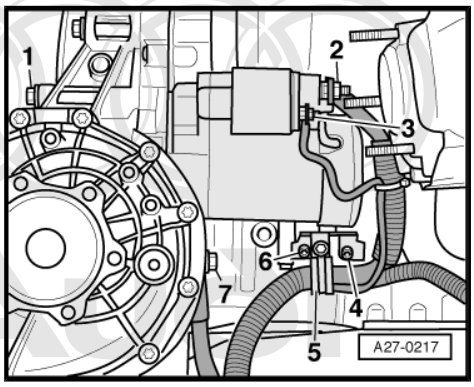

Note

Disregard -item 5-.

– Insert guide pin of adapter - T40058- with the larger-diameter section -arrow 1- facing towards the engine. The smaller-diameter section -arrow 2- faces the adapter.

Protected by copyright. Copying for private or commercial purposes, in part or in whole, is not permitted unless authorised by AUDI AG. AUDI AG does not guarantee or accept any liability with respect to the correctness of information in this document. Copyright by AUDI AG.

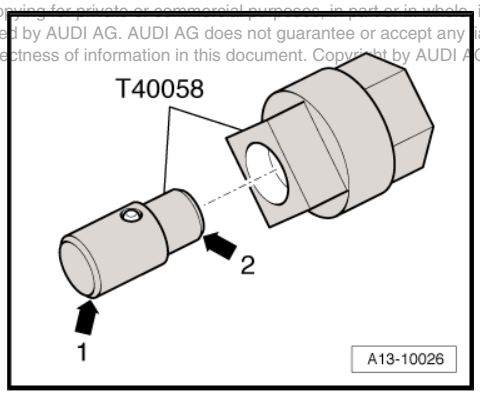

– When loosening torque converter bolts, counterhold crankshaft using adapter - T40058- .

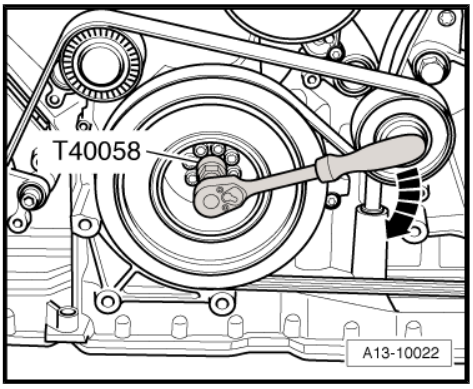

Note

Disregard -arrow-.

Caution

Do not rotate crankshaft in opposite direction of engine rotation.

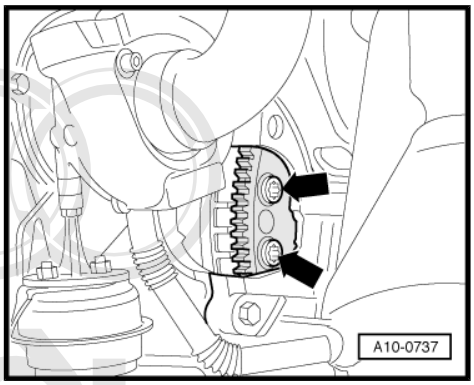

– Unscrew 6 bolts -arrows- for torque converter, working through opening of removed starter (turn crankshaft $^{1}/_{3}$ turn each time).

– Remove engine/gearbox securing bolts.

– Loosen clamping bolts -1- on sides of scissor-type assembly platform - VAS 6131 A- and pull rear section of platform together with gearbox towards rear -arrow-.

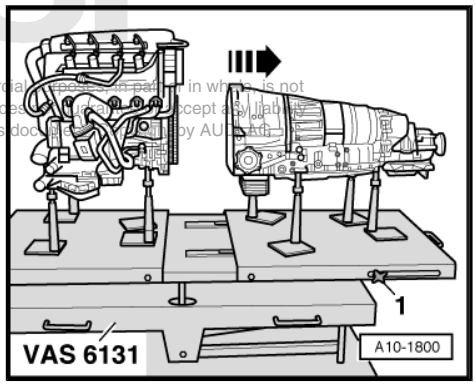

Protected by copyright. Copying for private or commercial purposes, in part or in whole, is not permitted unless authorised by AUDI AG. AUDI AG does not guarantee or assume any liability with respect to the correctness of information in this document. Copyright by AUDI AG.

3 Securing engine to assembly stand

Special tools and workshop equipment required

- Lifting tackle - 3033-
- Engine and gearbox support - VAS 6095- with support bracket for V8 TDI engine, Audi A8 - VAS 6095/1-3-
- Workshop hoist - VAS 6100-

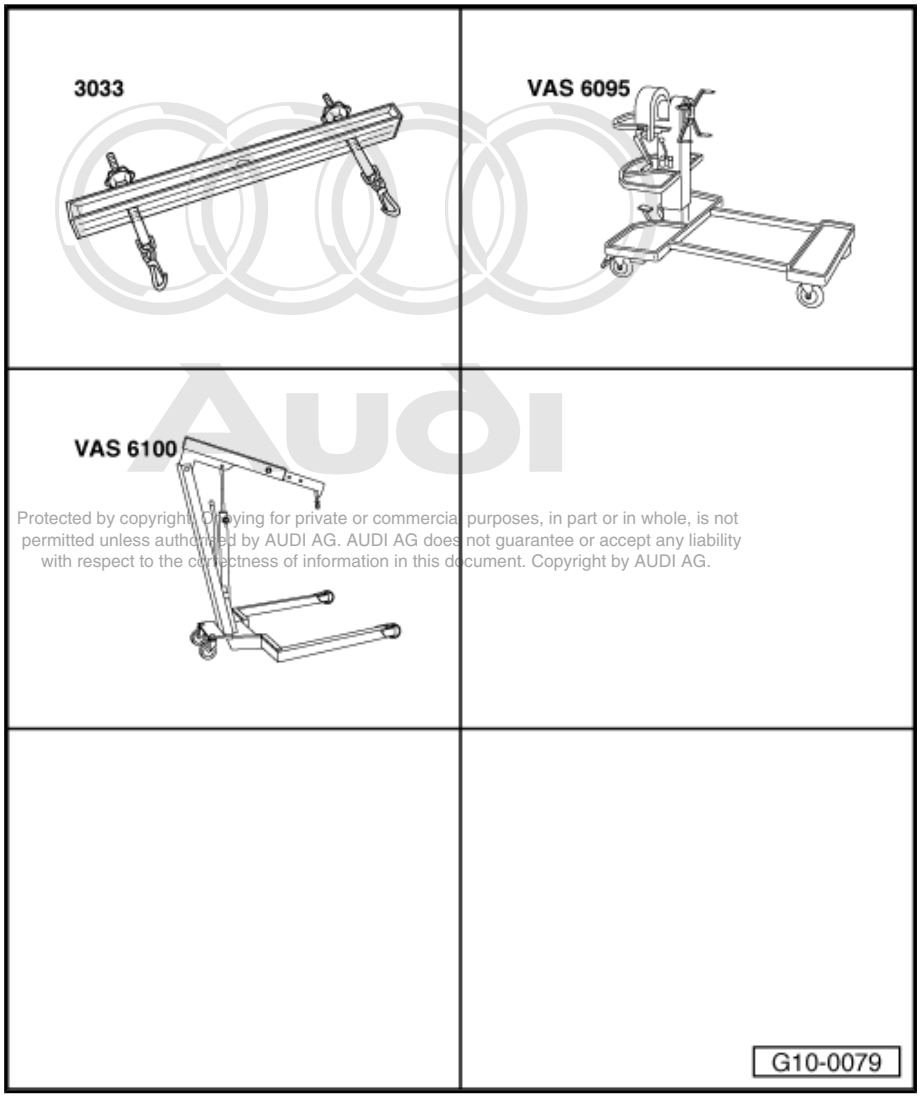

Protected by copyright. Copying for private or commercial purposes, in part or in whole, is not permitted unless authorised by AUDI AG. AUDI AG does not guarantee or accept any liability with respect to the correctness of information in this document. Copyright by AUDI AG.

Procedure

- Engine separated from gearbox ⇒ page 31 .

– Attach lifting tackle - 3033- to workshop hoist - VAS 6100- as shown in the illustration.

– Lift engine off the support elements on scissor-type assembly platform - VAS 6131 A- .

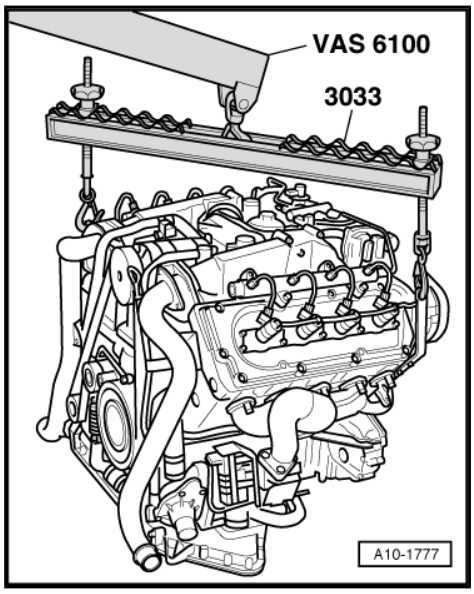

– Unplug electrical connector -2- at engine mounting (left-side).
– Unscrew bolt -1- and remove engine mounting left-side).

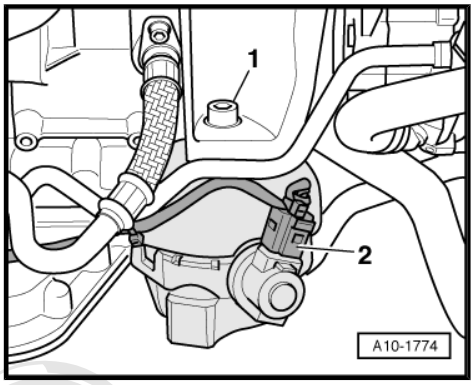

– Remove bolts -arrows- and detach engine support (left-side).

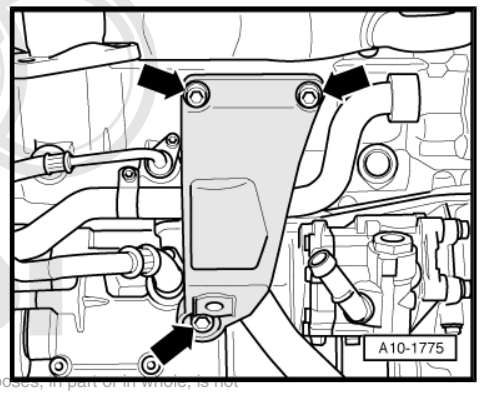

Protected by copyright. Copying for private or commercial purposes, in part or in whole, is not permitted unless authorised by AUDI AG. AUDI AG does not guarantee or accept any liability with respect to the correctness of information in this document. Copyright by AUDI AG.

– Using bracket -VAS 6095/1-3- secure engine to engine and gearbox support - VAS 6095- as shown in the illustration.

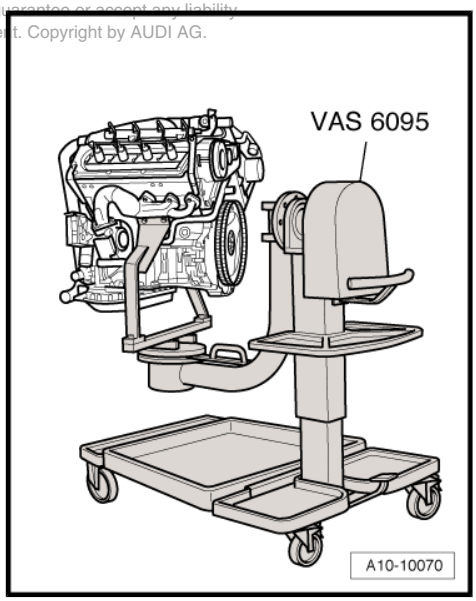

4 Installing engine

Note

- *Renew self-locking nuts and bolts when performing assembly work.*
- *Renew bolts which are tightened to a specified angle as well as oil seals and gaskets.*
- *Hose connections and hoses for charge air system must be free of oil and grease before assembly.*
- *Secure all hose connections with the correct type of hose clips (same as original equipment) ⇒ Electronic parts catalogue .*
- *Fit all cable ties in the original positions when installing.*

Protected by copyright. Copying for private or commercial purposes, in part or in whole, is not permitted unless authorised by AUDI AG. AUDI AG does not guarantee the accuracy of the data contained in this document.

– Before installing an exchange engine, check whether the centralising bush -arrow- for the torque converter is fitted at the rear of the crankshaft.

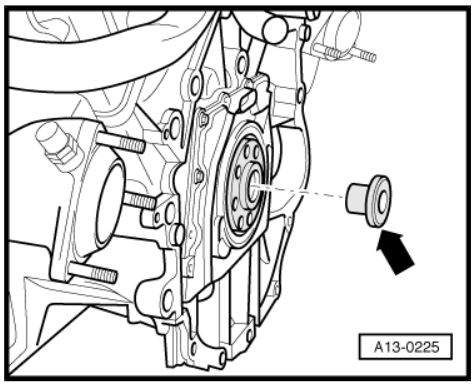

– Before installing an exchange engine, check whether the flat-section O-ring -arrow- is fitted in the drive shaft of the power steering pump.

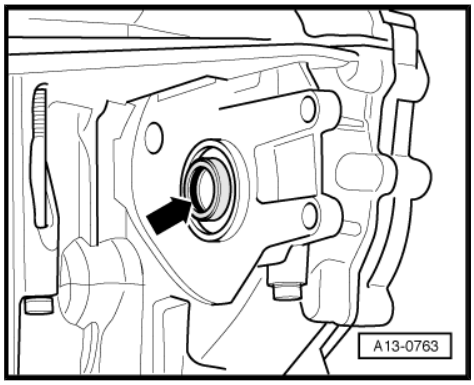

– Check whether dowel sleeves -A- for centring the engine/gearbox assembly are fitted in the cylinder block; install if necessary.

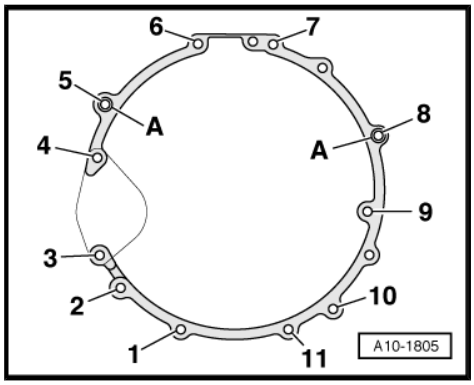

– Before bringing engine and gearbox together, turn torque converter and drive plate on engine so that the holes for the securing bolts are in line with the opening for the starter motor -arrows-.

– To secure torque converter on drive plate, use only new ribbed bolts of the correct type (same as original equipment) as specified in ⇒ Electronic parts catalogue .

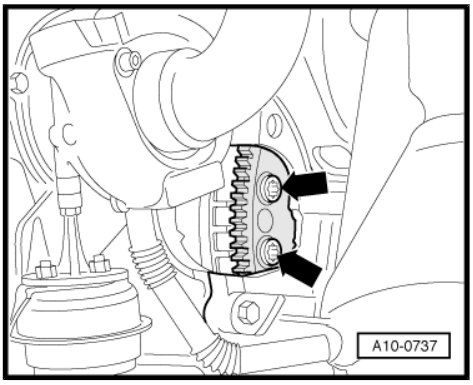

Caution

Do not rotate crankshaft in opposite direction of engine rotation.

– Bolt gearbox to engine.

Note

- *Tightening torques apply only to lightly greased, oiled, phosphated or black-finished nuts and bolts.*
- *Additional lubricant such as engine oil or gearbox oil may be used, but do not use lubricant containing graphite.*
- *Do not use degreased parts.*
- *Tolerance for tightening torques: ± 15%.*

Securing engine to gearbox

Item	Bolt	Nm
1, 2, 8, 10, 11	M12x75	65
3	M10x45	45
4	M10x135	65 1)
5, 6, 7	M12x100	65
9	M12x155	65
A	Dowel sleeves for centralising	
• 1) Property class 10.9.		

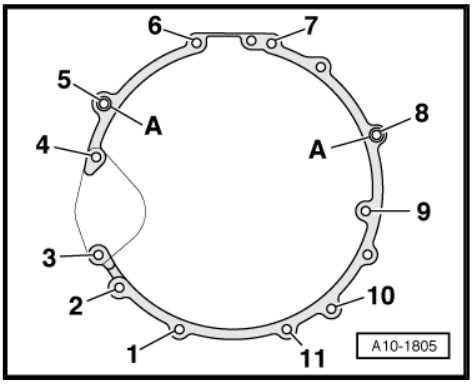

Remaining installation steps are carried out in reverse sequence; note the following:

– Install starter catalytic converter: left-side ⇒ page 295 , right-side ⇒ page 301 .

– Screw down spindles of support elements -VAS 6131/10-11- and -VAS 6131/10-12- on left side of engine/gearbox assembly.

– Unscrew both base plates for support elements (left-side) at scissor-type assembly platform -VAS 6131 A- .

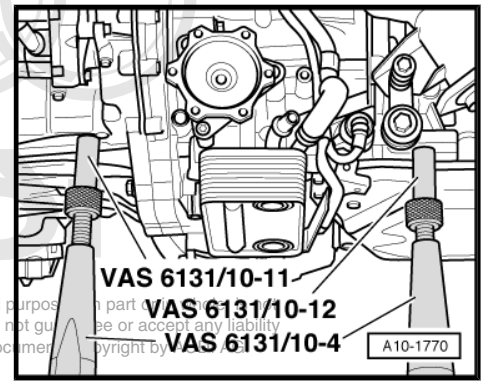

Protected by copyright. Copying for private or commercial purposes, in part or in whole, is not permitted unless authorised by AUDI AG. AUDI AG does not guarantee or accept any liability with respect to the correctness of information in this document. Copyright by AUDI AG.

– Screw down spindles of support elements -VAS 6131/10-11- and -VAS 6131/10-13- on right side of engine/gearbox assembly.

– Unscrew both base plates for support elements (right-side) at scissor-type assembly platform - VAS 6131 A- .

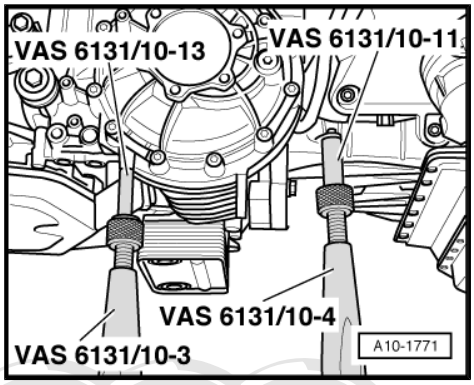

Note

The mounting points for engine (front) and gearbox (rear) remain unchanged.

– Set up scissor-type assembly platform - VAS 6131 A- with support set for Audi - VAS 6131/10- as follows:

Platform co-ordinates	Parts from support set for Audi - VAS 6131/10-			
C3 1)	/10-1	/10-4	/10-5	/10-6
G3 1)	/10-1	/10-4	/10-5	/10-6
B6	/10-1	/10-3	/10-5	/10-7
G6	/10-1	/10-3	/10-5	/10-7
B10	/10-1	/10-2	/10-5	/10-8 2)
G10	/10-1	/10-2	/10-5	/10-8 2)
D16 1)	/10-1	/10-4	/10-5	/10-9
G15 1)	/10-1	/10-4	/10-5	/10-10

- 1) Support elements remain unchanged.
- 2) Secure support elements only after installing the sub-frame.

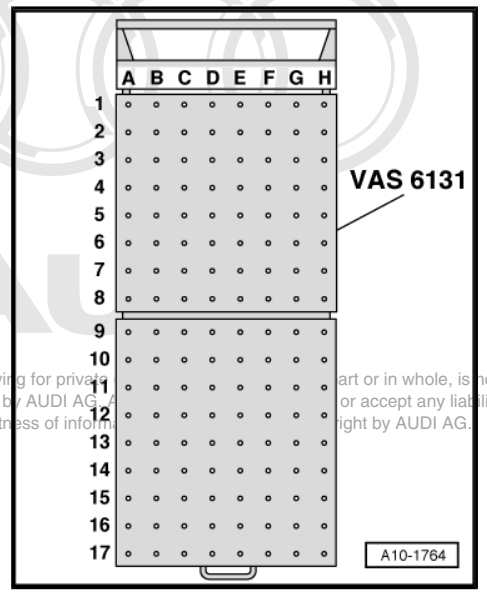

Protected by copyright. Copying for private or commercial purposes, in part or in whole, is not permitted unless authorised by AUDI AG. AUDI AG does not guarantee or accept any liability with respect to the correctness of information. Copyright by AUDI AG.

– Position engine cross member on the two support elements - VAS 6131/10-7- .

– Screw up spindles for support elements -VAS 6131/10-7- on left and right sides.

– Tighten base plates for support elements on scissor-type assembly platform - VAS 6131 A- to 20 Nm.

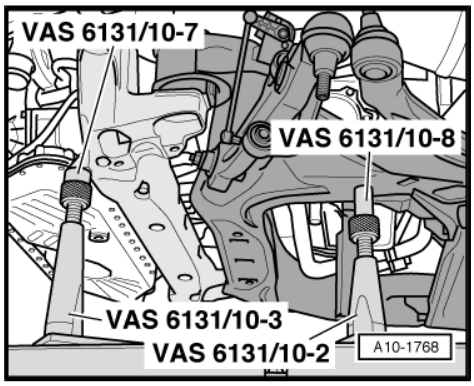

– Tighten bolts for engine mountings -arrows- on both sides ⇒ page 46 .

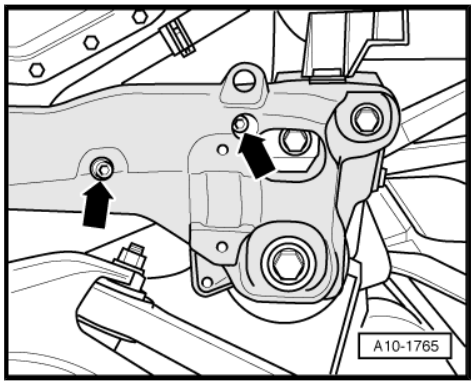

Note

A second mechanic is required for positioning the subframe on the support elements.

– Fit subframe onto the two support elements -VAS 6131/10-8- .
– Screw up spindles for support elements -VAS 6131/10-8- on left and right sides.
– Tighten base plates for support elements on scissor-type assembly platform - VAS 6131 A- to 20 Nm.

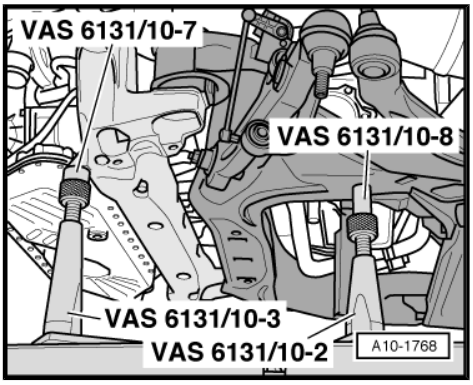

– Tighten bolts for front gearbox mountings -arrows- on both sides.
– Guide engine/gearbox assembly together with subframe and engine cross member into the body from below using scissor-type assembly platform - VAS 6131 A- .

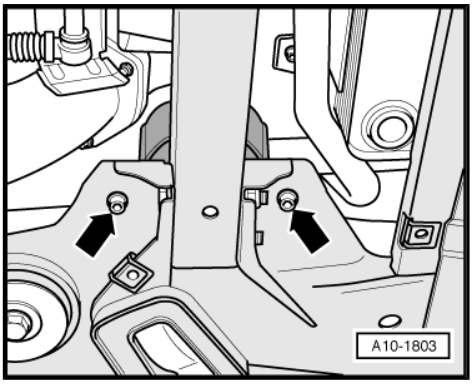

– Install subframe ⇒ Rep. gr. 40 .
– Tighten subframe bolts only to specified torque (do not turn further). Do not tighten bolts to final setting until after wheel alignment check has been performed ⇒ Rep. gr. 40 .

WARNING

The vehicle must not be driven at this stage.

– Tighten bolts -4- for engine cross member ⇒ page 46 .

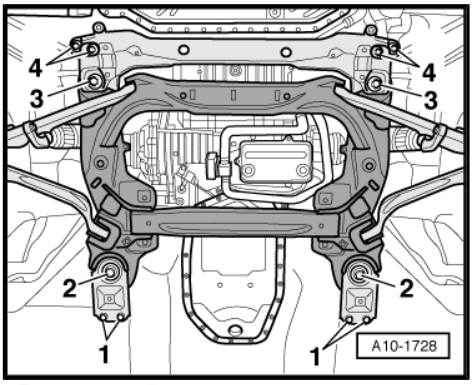

Protected by copyright. Copying for private or commercial purposes, in part or in whole, is not permitted unless authorised by AUDI AG. AUDI AG does not guarantee or accept any liability with respect to the correctness of information in this document. Copyright by AUDI AG.

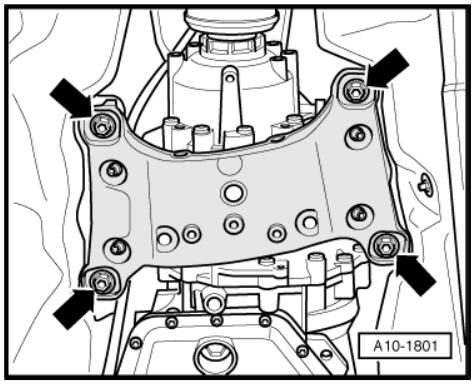

- Tighten bolts -arrows- at tunnel cross member.
- Install propshaft ⇒ Rear final drive 0AR; Rep. gr. 39 .
- Install selector lever cable and check adjustment if necessary ⇒ Rep. gr. 37 .
- Install particulate filter/main catalytic converter: left-side ⇒ page 309 , right-side ⇒ page 310 .
- Align exhaust system so it is free of stress ⇒ page 313 .
- Install guide link, track control link and anti-roll bar ⇒ Rep. gr. 40 .
- Install drive shafts ⇒ Rep. gr. 40 .
- Install refrigerant lines ⇒ Rep. gr. 87 .
- Install lock carrier with attachments ⇒ Rep. gr. 50 .
- Install front and rear sections of front wheel housing liners (left and right) ⇒ Rep. gr. 66 .
- Install bumper cover (front) ⇒ Rep. gr. 63 .
- Electrical connections and routing ⇒ Current flow diagrams, Electrical fault finding and Fitting locations.
- Observe notes on procedures required after connecting battery ⇒ Electrical system; Rep. gr. 27 .

Caution

Do not use a battery charger to boost starting. There is danger of damaging the vehicle's control units.

- Connect coolant hose with plug-in connector to radiator ⇒ page 242 .
- Install body brace ⇒ Rep. gr. 47 .
- Install and adjust wiper arms ⇒ Electrical system; Rep. gr. 92 .
- Install dust and pollen filter ⇒ Rep. gr. 87 .
- Before starting the engine for the first time, fill up the power steering reservoir with hydraulic fluid; the power steering pump must not run dry.
- Charge the refrigerant system ⇒ Air conditioner system - with refrigerant R134a .
- Check engine oil level ⇒ Maintenance ; Booklet 404 .

Protected by copyright. Copying for private or commercial purposes, in part or in whole, is not permitted unless authorised by AUDI AG. AUDI AG does not guarantee or accept any liability with respect to the correctness of information in this document. Copyright by AUDI AG.

Note

Do not reuse coolant.

- Fill cooling system ⇒ page 216 .
- Fill up hydraulic fluid for power steering and bleed steering system ⇒ Rep. gr. 48 .
- Perform wheel alignment check ⇒ Rep. gr. 44 .

WARNING

Tighten bolts for subframe to final setting after performing wheel alignment check.

– Check headlight adjustment ⇒ Maintenance ; Booklet 404 .

– Check fuel system for leaks ⇒ page 5 .

Tightening torques

Protected by copyright. Copying for private or commercial purposes, in part or in whole, is not permitted unless authorised by AUDI AG. AUDI AG does not guarantee or accept any liability with respect to the correctness of information in this document. Copyright by AUDI AG.

Note

- *Tightening torques apply only to lightly greased, oiled, phosphated or black-finished nuts and bolts.*
- *Additional lubricant such as engine oil or gearbox oil may be used, but do not use lubricant containing graphite.*
- *Do not use degreased parts.*
- *Tolerance for tightening torques: ± 15%.*

Component		Nm
Bolts/nuts	M6	9
	M8	20
	M10	40
	M12	65
Except for the following:		
Drive plate to torque converter		85
Gearbox mounting to subframe		23
Tunnel cross member to body		40
Gearbox support to gearbox		40
Propshaft heat shield to gearbox		23
Air pipe to engine cross member		9
Bracket for charge air cooler to body		9
Bracket for noise insulation to subframe		9
Coolant pipe to gearbox		22
Terminal B+ to starter		16
Terminal 50 to starter		10
Support for turbocharger to:	Turbocharger	40 [1)]
	Engine support	22
Battery cable to fuse box		20
Hydraulic pressure pipe connection		45
Hose clips (9 mm wide)		3
Hose clips (13 mm wide)		5.5

- [1)] Coat threads and contact surface with high-temperature paste; for high-temperature paste refer to ⇒ Electronic parts catalogue .

5 Assembly mountings

⇒ “5.1 Assembly mountings - exploded view”, page 46

⇒ “5.2 Removing and installing engine mounting (left-side)”, page 47

⇒ “5.4 Removing and installing mounting for torque reaction support”, page 48

5.1 Assembly mountings - exploded view

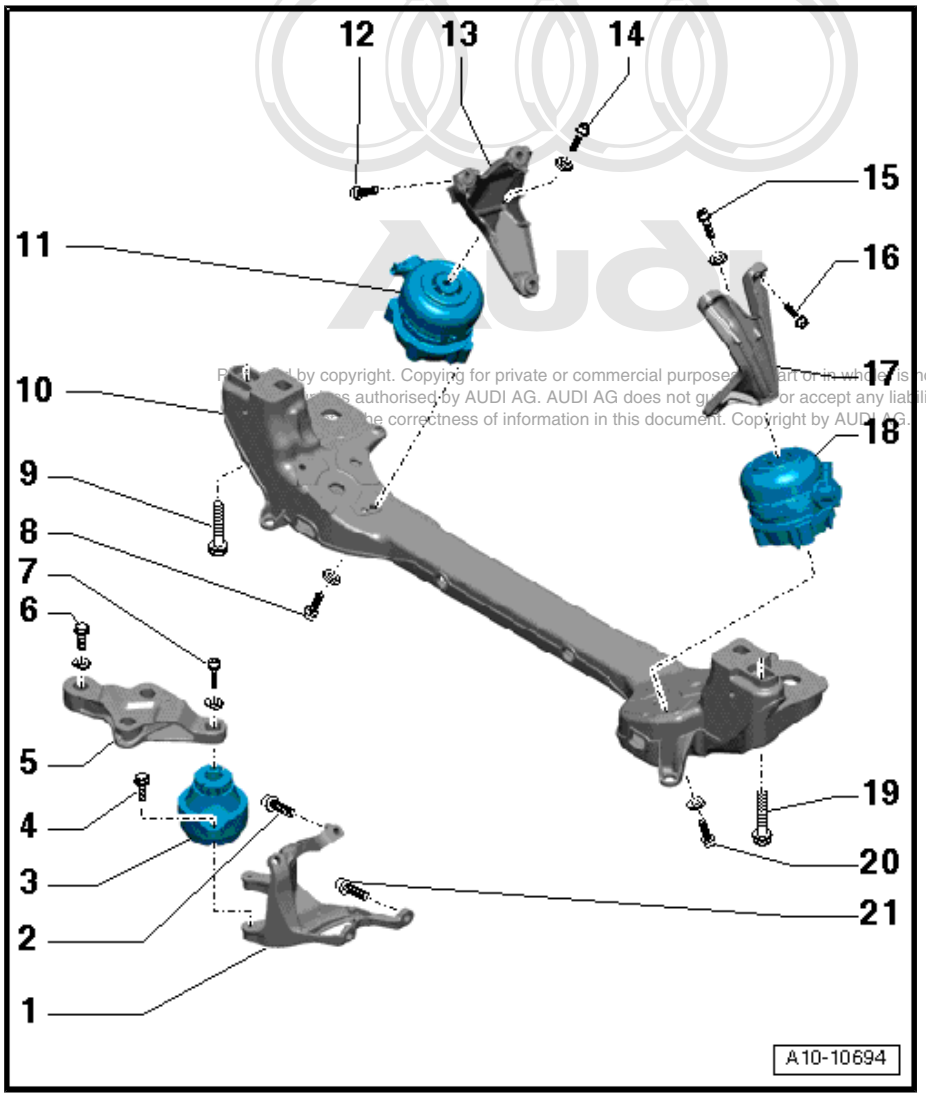

Protected by copyright. Copying for private or commercial purposes, in part or in whole, is not permitted unless authorised by AUDI AG. AUDI AG does not guarantee or accept any liability with respect to the correctness of information in this document. Copyright by AUDI AG.

1 - Torque reaction support

- ❑ Version fitted in vehicle may differ from illustration

2 - 40 Nm

- ❑ Different lengths

3 - Mounting for torque reaction support

- ❑ Removing and installing ⇒ page 48

4 - 23 Nm

5 - Bracket for torque reaction support

6 - 40 Nm

7 - 40 Nm

8 - 23 Nm

9 - 68 Nm

10 - Engine cross member

11 - Engine mounting (right-side)

- ❑ Removing and installing ⇒ page 47

12 - 40 Nm

13 - Engine support (right-side)

- ❑ To remove, detach engine mounting (right-side) ⇒ page 47

14 - 40 Nm

15 - 40 Nm

16 - 40 Nm

17 - Engine support (left-side)

- ❑ To remove, detach engine mounting (left-side) ⇒ page 47

18 - Engine mounting (left-side)

- ❑ Removing and installing ⇒ page 47

19 - 68 Nm

20 - 23 Nm

21 - 23 Nm

5.2 Removing and installing engine mounting (left-side)

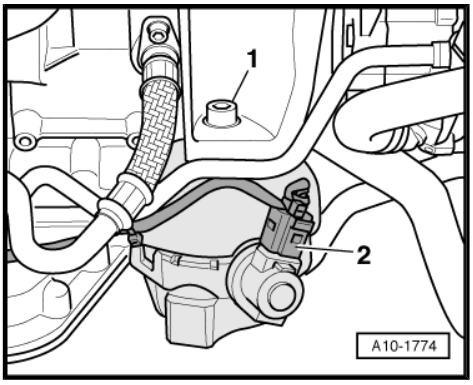

Removing

– Remove starter catalytic converter (left-side) ⇒ page 295 .

– Unplug electrical connector -2- at engine mounting (left-side).

– Unscrew bolt -1- and remove engine mounting left-side).

Installing

Installation is carried out in the reverse order; note the following:

– Install starter catalytic converter (left-side) ⇒ page 295 .

Tightening torques ⇒ page 46

5.3 Removing and installing engine mounting (right-side)

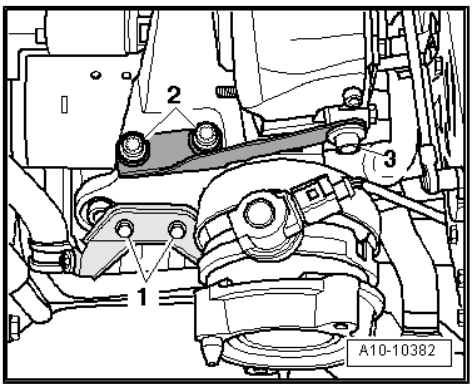

Removing

– Remove starter catalytic converter (right-side) ⇒ page 301 .

– Remove bolts -2- and -3- and detach support for turbocharger.

– Remove bolts -1- and detach bracket for wiring harness.

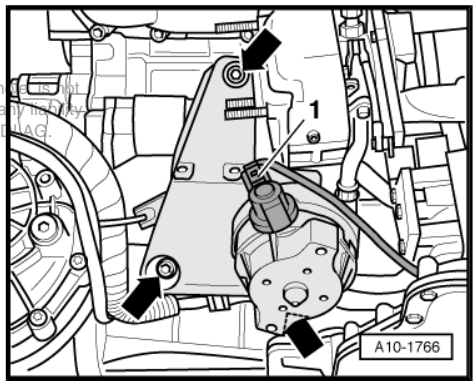

– Unplug electrical connector -1- at engine mounting (right-side).

– Move wiring clear at engine support.

– Remove bolts -arrows- and detach engine support with engine mounting.

Protected by copyright. Copying for private or commercial purposes, in part or in whole, is not permitted unless authorised by AUDI AG. AUDI AG does not guarantee or accept any liability with respect to the correctness of information in this document. Copyright by AUDI AG.

– Remove bolt -arrow- and detach engine mounting from engine support.

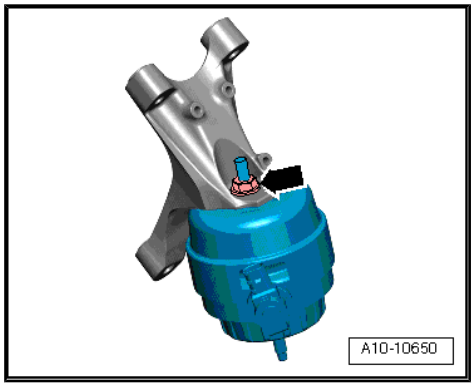

Installing

Installation is carried out in the reverse order; note the following:

– Install starter catalytic converter (right-side) ⇒ page 301 .

Tightening torques

Component		Nm
Engine support to engine		40
Support for turbocharger to:	Turbocharger	40 [1]
	Engine support	22

• [1] Coat threads and contact surface with high-temperature paste; for high-temperature paste refer to ⇒ Electronic parts catalogue .

5.4 Removing and installing mounting for torque reaction support

Special tools and workshop equipment required

♦ Electric drill

♦ Stepped centre bit (∅ 24 mm)

Removing

– Remove bumper cover (front) ⇒ Rep. gr. 63 .

– Remove headlight (right-side) ⇒ Electrical system; Rep. gr. 94 .

– Remove bolts -arrows- and detach top section of air cleaner housing (right-side).

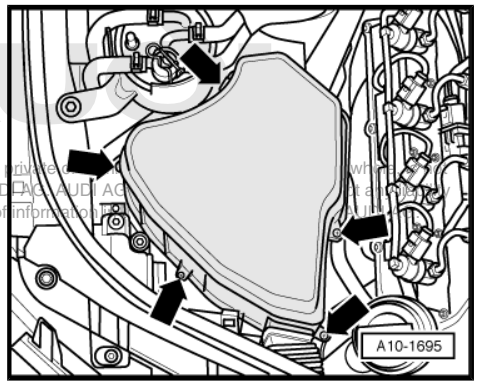

Protected by copyright. Copying for private or commercial purposes, in part or in whole, is not permitted unless authorised by AUDI AG. AUDI AG does not guarantee or assume any liability with respect to the correctness of information in this document.

– Unplug electrical connector -1- at air mass meter and move wiring clear.

– Remove bolts -arrows- and detach bottom section of air cleaner housing (right-side).

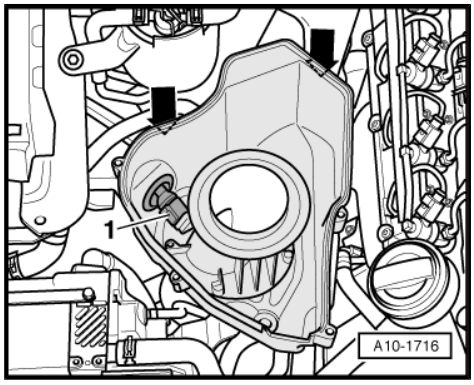

– Compress retainer catches -arrows- and detach air duct from lock carrier (front right).

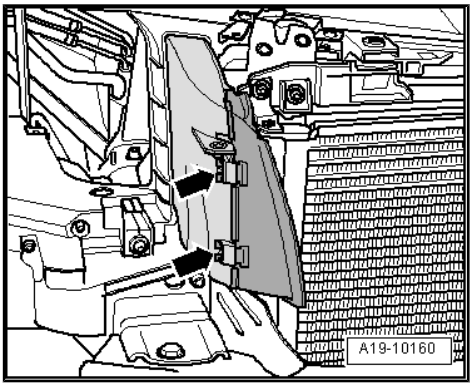

– Remove bolts -arrows-.
– Detach air duct from lock carrier (rear right).

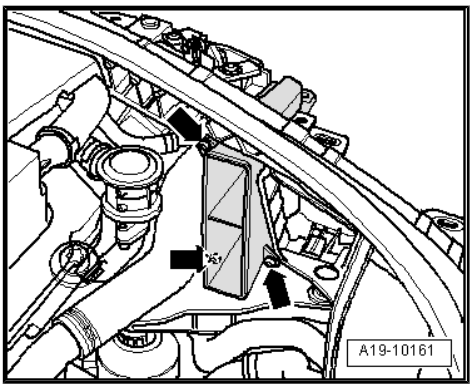

– Mark out drilling on lock carrier as illustrated according to dimensions -a and b-.
• Distance -a- = 40 mm.
• Distance -b- = 55 mm.
– Drill a hole of 24 mm dia.

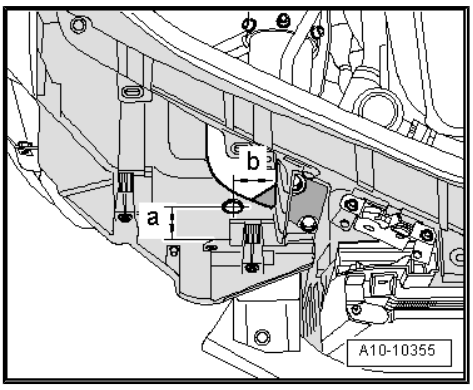

Note

Drill a pilot hole and then drill out to 24 mm dia using the stepped centre bit.

Protected by copyright. Copying for private or commercial purposes, in part or in whole, is not permitted unless authorised by AUDI AG. AUDI AG does not guarantee or accept any liability with respect to the correctness of information in this document. Copyright by AUDI

– Remove bolts -1 and 2- on bracket for torque reaction support.
– Slacken bolt -3- a few turns.

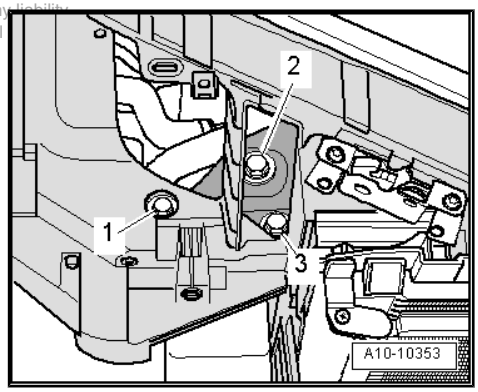

– Remove bolt -arrow- on mounting for torque reaction support.

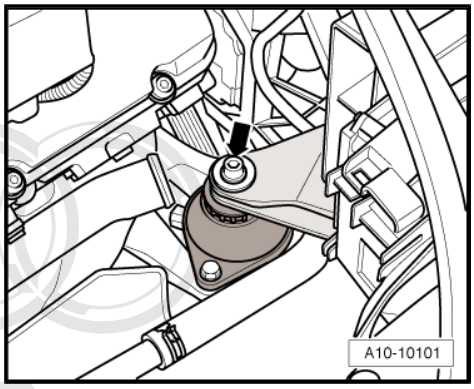

– Unscrew bolts -arrows- and remove mounting for torque reaction support.

Protected by copyright. Copying for private or commercia
permitted unless authorised by AUDI AG. AUDI AG doe
with respect to the correctness of information in this d

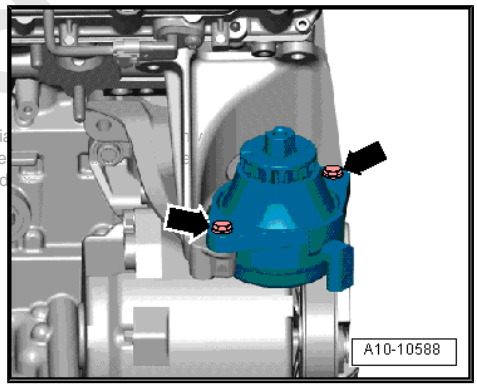

Installing

– Turn adjuster ring -1- on mounting for torque reaction support clockwise to stop.

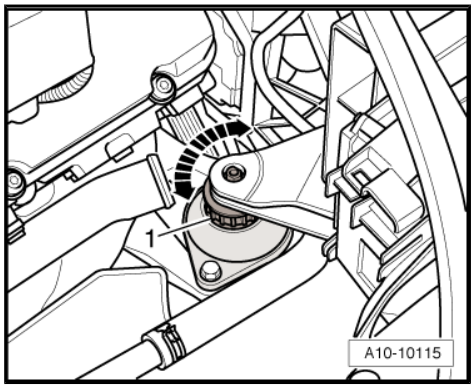

– Tighten bolts -1 and 3- for bracket for torque reaction support.

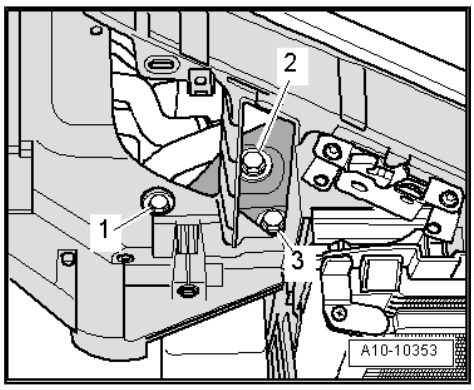

– Turn adjuster ring -1- by hand anti-clockwise until it comes into contact with bracket for torque reaction support.

– Then turn adjuster ring one turn clockwise.

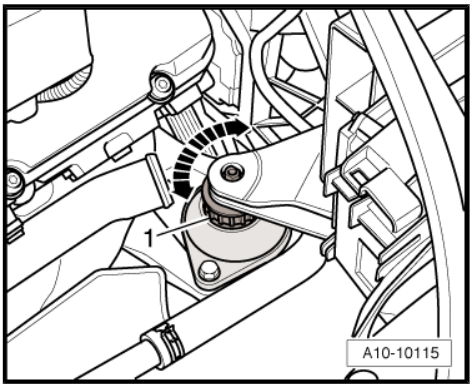

– Tighten bolt -arrow- on mounting for torque reaction support.

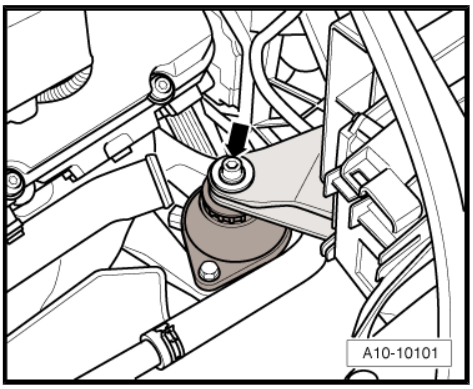

Installation is carried out in the reverse order; note the following:

– Install headlight ⇒ Electrical system; Rep. gr. 94

– Install bumper cover (front) ⇒ Rep. gr. 63 .

– Install air cleaner housing ⇒ Rep. gr. 24 .

– Check headlight adjustment ⇒ Maintenance ; Booklet 404 .

Protected by copyright. Copying for private or commercial purposes, in part or in whole, is not permitted unless authorised by AUDI AG. AUDI AG does not guarantee or accept any liability with respect to the correctness of information in this document. Copyright by AUDI AG.

13 – Crankshaft group

1 Lowering subframe for repair and assembly work

Special tools and workshop equipment required

- Support bracket - 10 - 222 A-
- Adapters - 10 - 222 A /21-
- Engine and gearbox jack - V.A.G 1383 A-

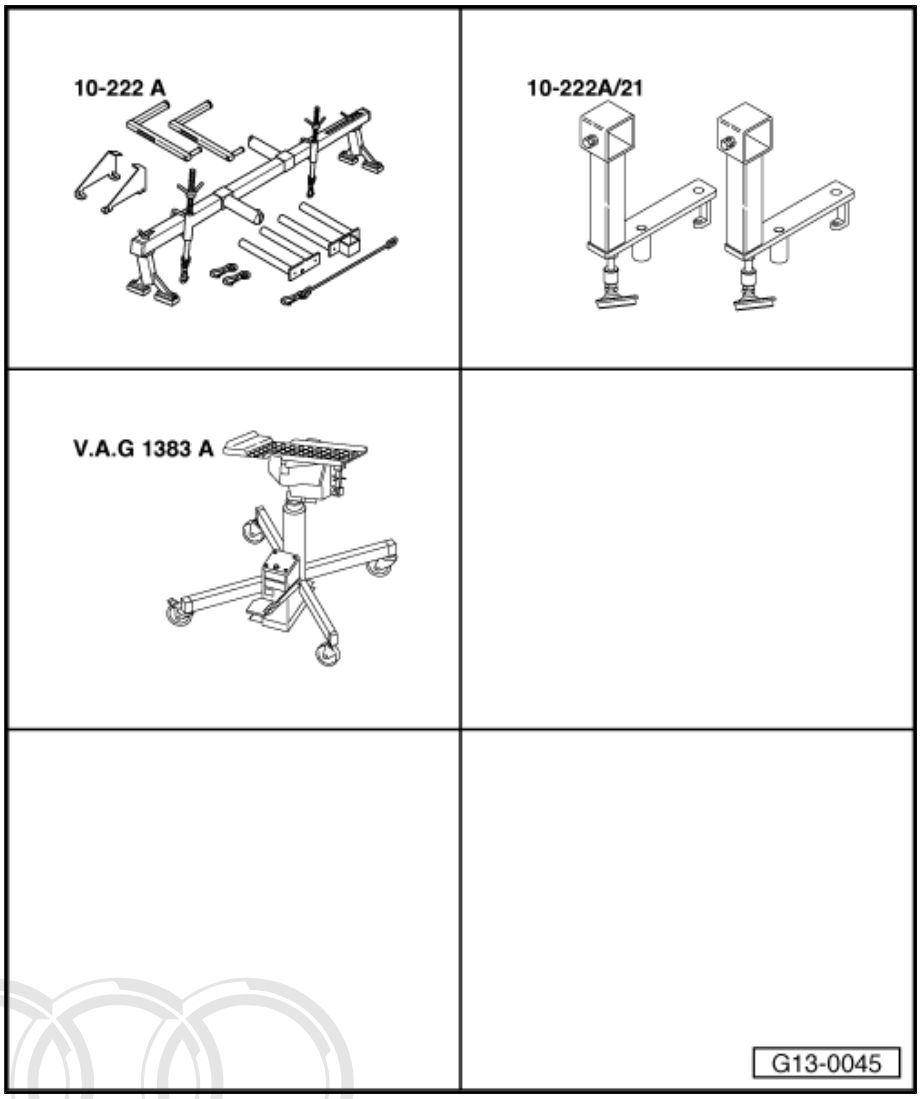

- Shackle - 10 - 222 A /12-

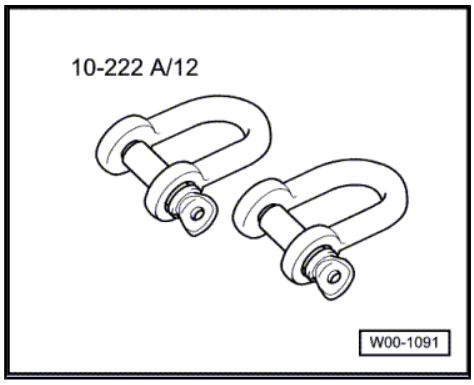

Protected by copyright. Copying for private or commercial purposes, in part or in whole, is not permitted unless authorised by AUDI AG. AUDI AG does not guarantee or accept any liability with respect to the correctness of information in this document. Copyright by AUDI AG.

Removing

– Carefully pull engine cover panel off four retaining pins one after the other -arrows-.

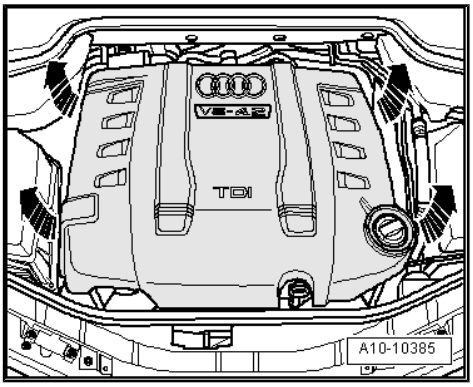

– Remove cover above coolant expansion tank -arrows-.

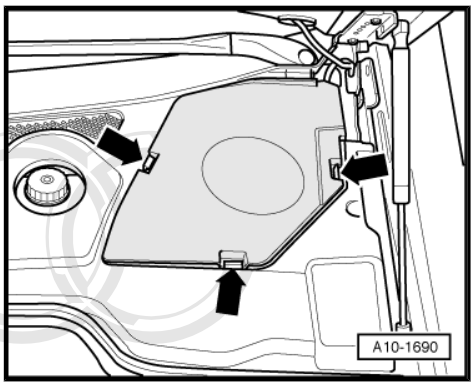

– Pull off rubber seal -1- on plenum chamber covers.

– Detach plenum chamber covers -2- and -3-.

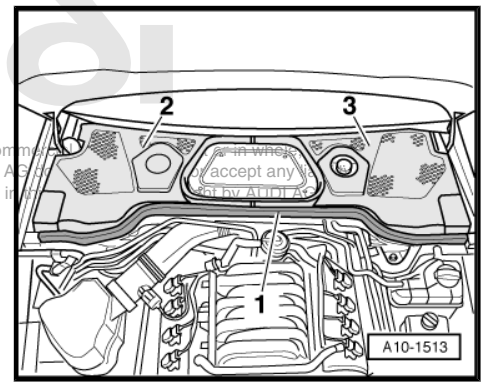

Protected by copyright. Copying for private or commercial purposes, in whole or in part, is not permitted unless authorised by AUDI AG. AUDI AG does not guarantee or accept any liability with respect to the correctness of information in this document.

– Remove bolt -arrow-.

– Pivot bracket for air conditioner pipe to one side.

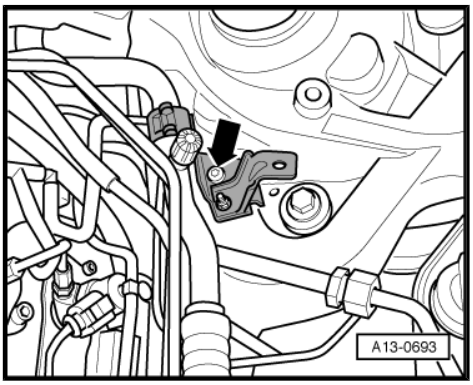

Note

To prevent damage to the refrigerant lines, ensure that the pipes and hoses are not stretched, kinked or bent.

– Remove bolts -arrows- on fuel filter bracket.

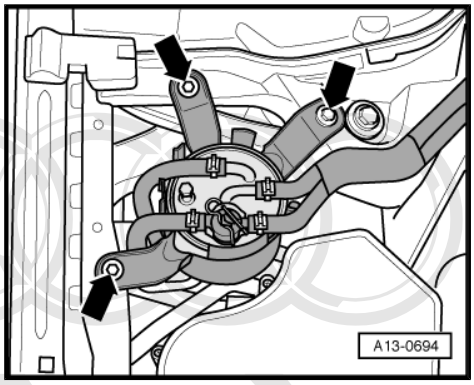

Note

Fuel filter remains in engine compartment with fuel lines connected.

– Unscrew rear bolts -3- for body brace.

– Attach adapters - 10 - 222 A /21- without cross beam onto suspension turrets.

- Supports are marked for left and right side of vehicle.
- The centre resting point -2- of supports is positioned on front bolts for body brace.
- The adapters - 10 - 222 A /21- are attached by means of the rear securing bolts -3- for the body brace.
- The knurled screw -1- must be screwed down until support plate rests on suspension turret.

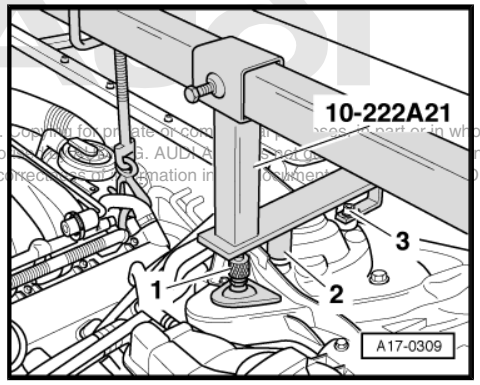

Protected by copyright. Copying for private or commercial purposes, in part or in whole, is not permitted unless authorized by AUDI AG. AUDI AG does not guarantee or assume any liability with respect to the correctness of information in this document. ©2013 AUDI AG.

– Fit cross beam with adapters - 10 - 222 A /3- to adapters - 10 - 222 A /21- .

– Attach shackles - 10 - 222 A /12- to engine lifting eyes.

– Secure spindles of support bracket - 10 - 222 A- to shackles - 10 - 222 A /12- .

– Take up weight of engine using spindles of support bracket.

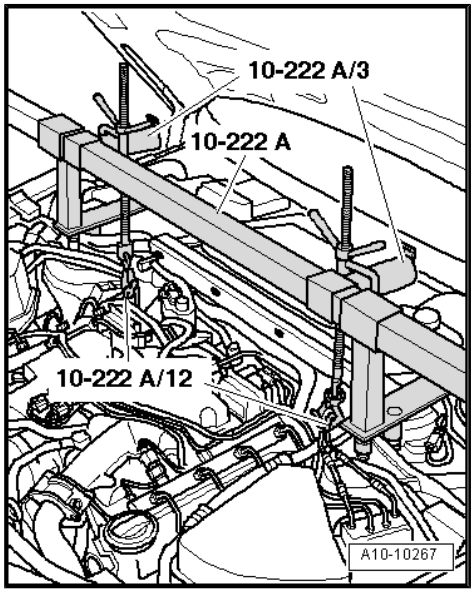

– Remove front wheels.

– Release fasteners -1-, -2- and -4- and take off noise insulation panels.

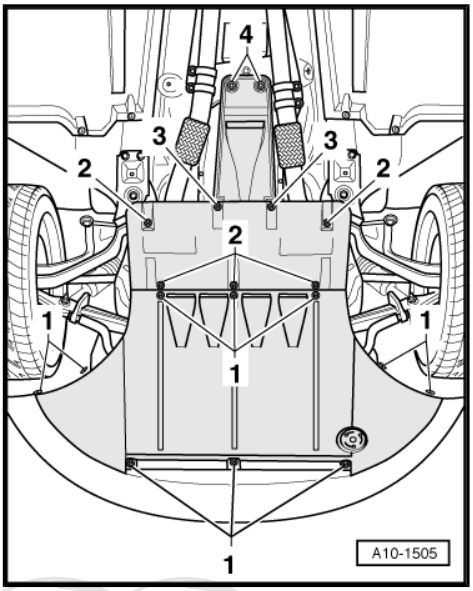

– Unbolt bracket for noise insulation -arrows-.

– Remove front sections of front wheel housing liners (left and right) ⇒ Rep. gr. 66 .

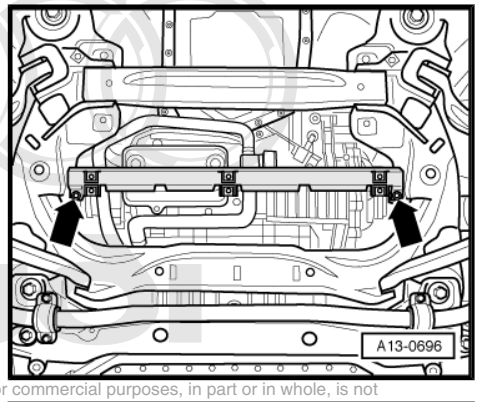

Protected by copyright. Copying for private or commercial purposes, in part or in whole, is not permitted unless authorised by AUDI AG. AUDI AG does not guarantee or accept any liability with respect to the correctness of information in this document. Copyright by AUDI AG.

– Remove bolts -arrows- and detach bracket for charge air cooler (left-side).

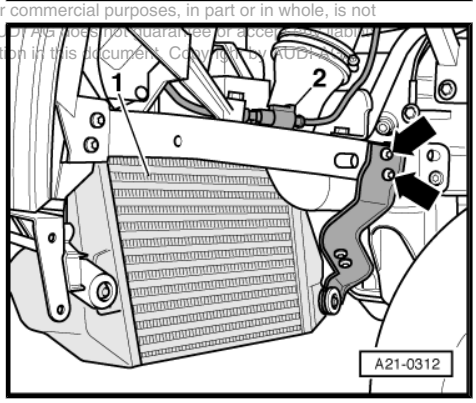

Note

Disregard items -1- and -2-.

– Remove bolt -arrow- for air intake pipe (left-side).

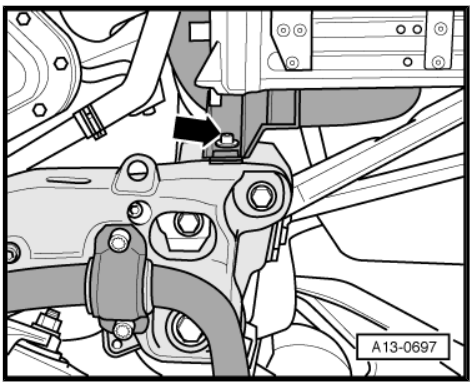

– Remove bolts -arrows- and detach bracket for charge air cooler (right-side).

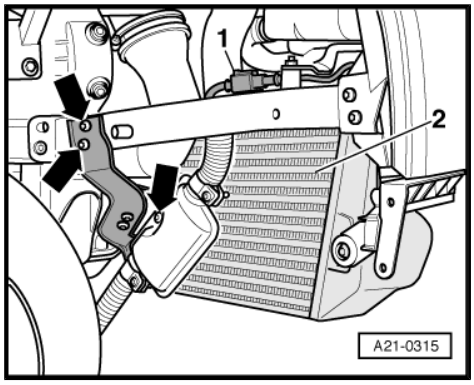

Note

Disregard items -1- and -2-.

– Remove bolt -arrow- for air intake pipe (right-side).

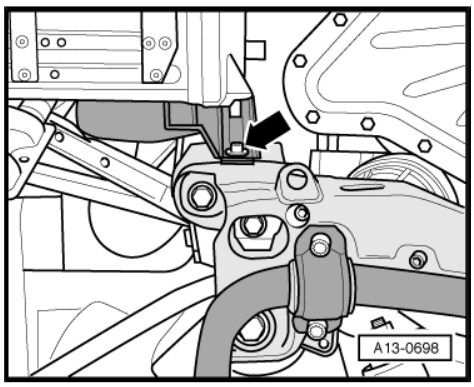

Protected by copyright. Copying for private or commercial purposes, in part or in whole, is not permitted unless authorised by AUDI AG. AUDI AG does not guarantee or accept any liability with respect to the correctness of information in this document. Copyright by AUDI AG.

– Unplug electrical connector -2- at vehicle level sender (left and right).
– Detach coupling rod -1- at track control link (left and right).

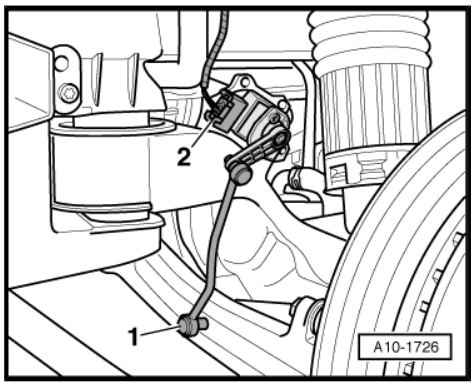

– Remove bolts (left and right) -arrows- evenly and detach anti-roll bar.

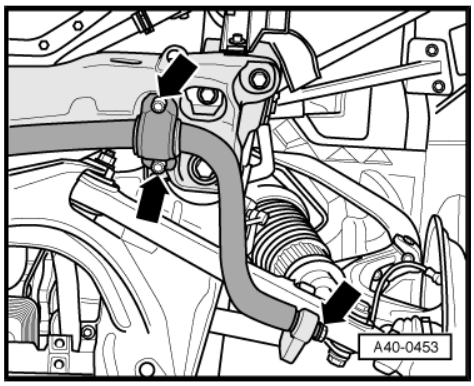

– Unbolt air spring struts (left and right) from track control links -arrow-.

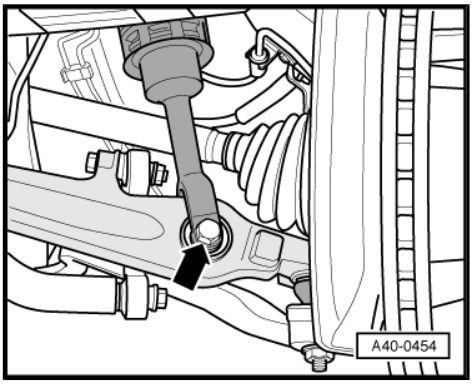

– Support engine cross member and subframe using engine and gearbox jack - V.A.G 1383 A- as shown in illustration.

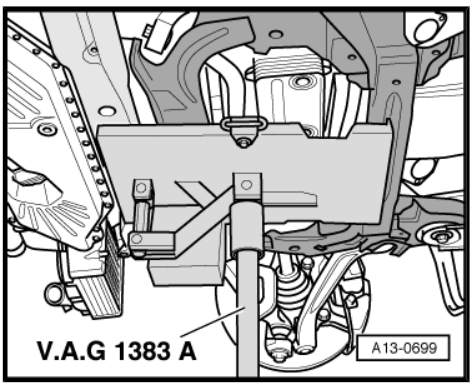

– Remove bolts for engine mountings -arrows- on both sides.

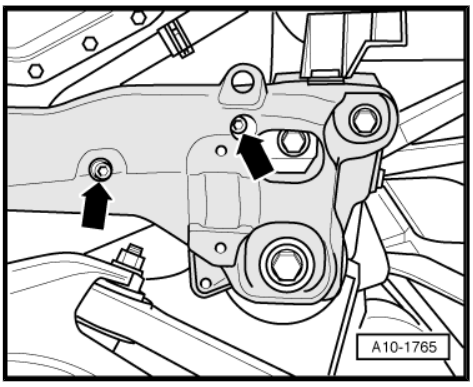

– Remove bolts -arrows- for front gearbox mountings (left and right).

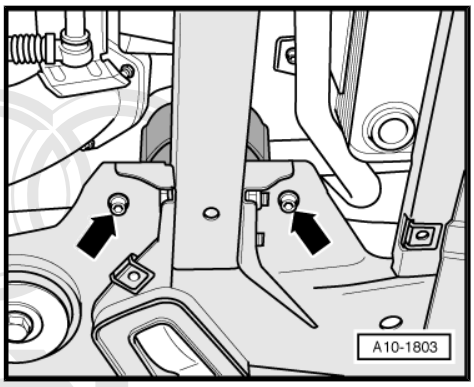

Protected by copyright. Copying for private or commercial purposes, in part or in whole, is not permitted unless authorised by AUDI AG. AUDI AG does not guarantee or accept any liability with respect to the correctness of information in this document. Copyright by AUDI AG.

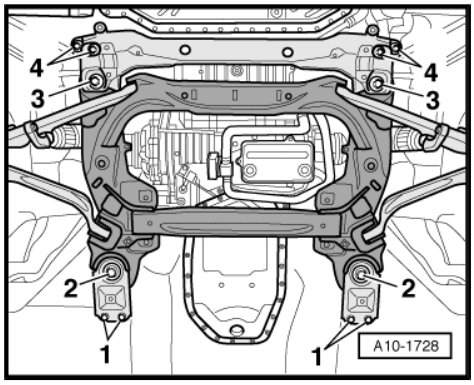

– Mark installation position of subframe on longitudinal member with felt-tip pen.
– Remove bolts -1- and -4-.
– Remove bolts -2- and -3- in a diagonal sequence and in stages.
– Slowly lower the subframe together with the engine cross member downwards.

Installing

Installation is carried out in the reverse order; note the following:

– Install subframe ⇒ Rep. gr. 40 .
– Tighten subframe bolts only to specified torque (do not turn further). Do not tighten bolts to final setting until after wheel alignment check has been performed ⇒ Rep. gr. 40 .

> ⚠ **WARNING**
>
> *The vehicle must not be driven at this stage.*

– Install engine cross member and engine mounting ⇒ page 46 .
– Install anti-roll bar ⇒ Rep. gr. 40 .
– Install front sections of front wheel housing liners (left and right) ⇒ Rep. gr. 66 .
– Install body brace ⇒ Rep. gr. 40 .
– Perform wheel alignment check ⇒ Rep. gr. 44 .

> ⚠ **WARNING**
>
> *Tighten bolts for subframe to final setting after performing wheel alignment check.*

Protected by copyright. Copying for private or commercial purposes, in part or in whole, is not permitted unless authorised by AUDI AG. AUDI AG does not guarantee or accept any liability with respect to the correctness of information in this document. Copyright by AUDI AG.

Tightening torques

Component	Nm
Gearbox mounting to subframe	23
Air pipe to engine cross member	9
Bracket for charge air cooler to body	9
Bracket for noise insulation to subframe	9
Fuel filter bracket to bodywork	9
Bracket for refrigerant line to body	9

2 Servicing work on pulley end

⇒ “2.1 Poly V-belt drive - exploded view”, page 59

⇒ “2.2 Removing and installing poly V-belt”, page 60

⇒ “2.3 Removing and installing tensioner for poly V-belt”, page 62

⇒ “2.4 Removing and installing vibration damper”, page 63

⇒ “2.5 Oil seal and sealing flange (pulley end) - exploded view”, page 64

⇒ “2.6 Renewing crankshaft oil seal (pulley end)”, page 65

⇒ “2.7 Removing and installing sealing flange (front)”, page 68

2.1 Poly V-belt drive - exploded view

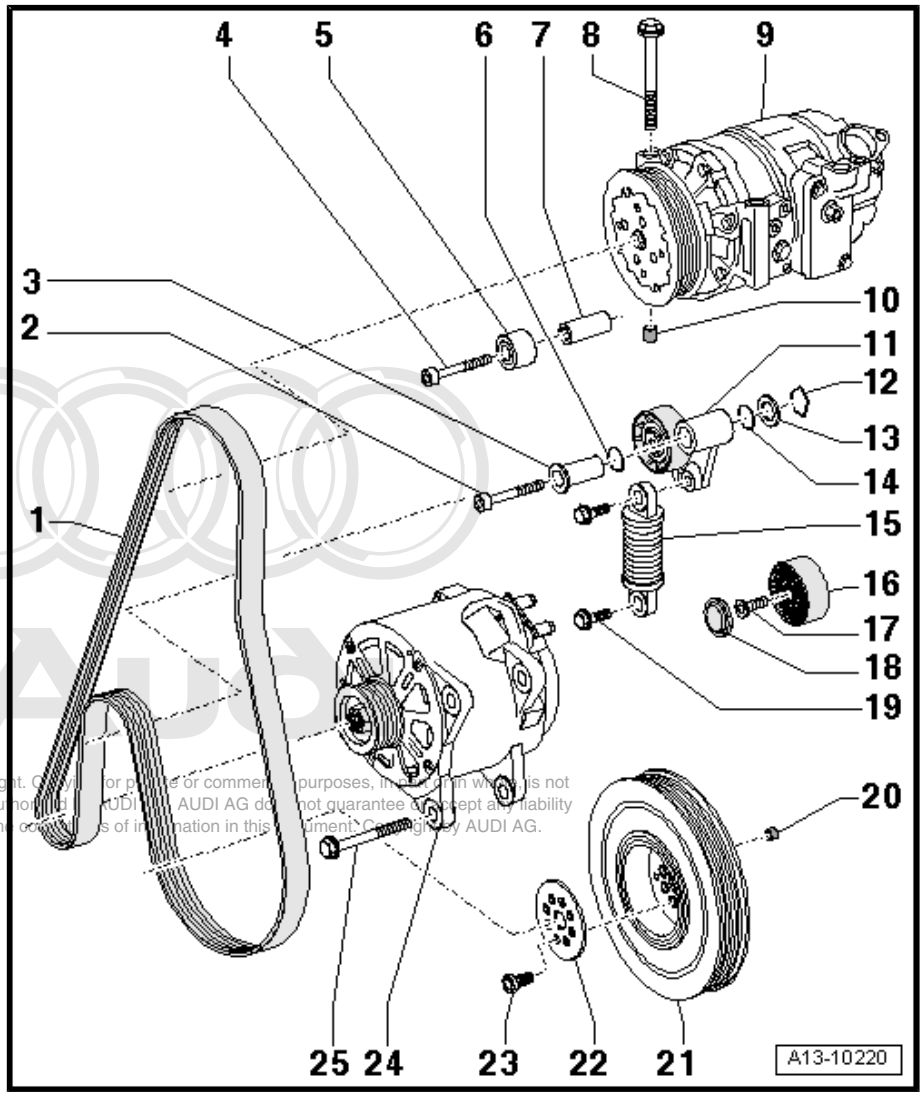

1 - Poly V-belt
- ❑ Before removing, mark direction of rotation with chalk or felt-tip pen. If the belt runs in the opposite direction when it is refitted, this can cause breakage.
- ❑ Removing and installing ⇒ page 60
- ❑ Check for wear

2 - 50 Nm
- ❑ Property class 10.9

3 - Bearing bush

4 - 22 Nm

5 - Idler roller

6 - O-ring
- ❑ Renew

7 - Spacer sleeve

8 - 22 Nm

9 - Air conditioner compressor
- ❑ Removing and installing ⇒ Rep. gr. 87

10 - Dowel sleeve
- ❑ 2x
- ❑ Check for correct seating in mounting plate

11 - Tensioning roller
- ❑ Not supplied separately
- ❑ Removing and installing ⇒ “2.3 Removing and installing tensioner for poly V-belt”, page 62

12 - Securing clip

13 - Washer

14 - O-ring
- ❑ Renew

Protected by copyright. Copying for private or commercial purposes, in whole or in part, is not permitted unless authorised by AUDI AG. AUDI AG does not guarantee or accept any liability with respect to the correctness of information in this document. Copyright by AUDI AG.

15 - Compression spring

- ❑ Not supplied separately
- ❑ Mark installation position
- ❑ Removing and installing ⇒ “2.3 Removing and installing tensioner for poly V-belt”, page 62

16 - Idler roller

17 - 25 Nm

- ❑ Property class 10.9

18 - Cap

- ❑ For idler roller
- ❑ Lever off with screwdriver

19 - 22 Nm

- ❑ Torque down bolts after installing poly V-belt

20 - Dowel sleeve

- ❑ Check for correct seating in damper weight

21 - Vibration damper

- ❑ With pulley for poly V-belt
- ❑ Removing and installing ⇒ page 63

22 - Washer

23 - 30 Nm + 45° ($^1/_8$ turn) further

- ❑ Renew

24 - Alternator

- ❑ Removing and installing ⇒ Electrical system; Rep. gr. 27

25 - 22 Nm

Protected by copyright. Copying for private or commercial purposes, in part or in whole, is not permitted unless authorised by AUDI AG. AUDI AG does not guarantee or accept any liability with respect to the correctness of information in this document. Copyright by AUDI AG.

2.2 Removing and installing poly V-belt

Removing

– Open quick-release fasteners -1- and remove noise insulation (front).

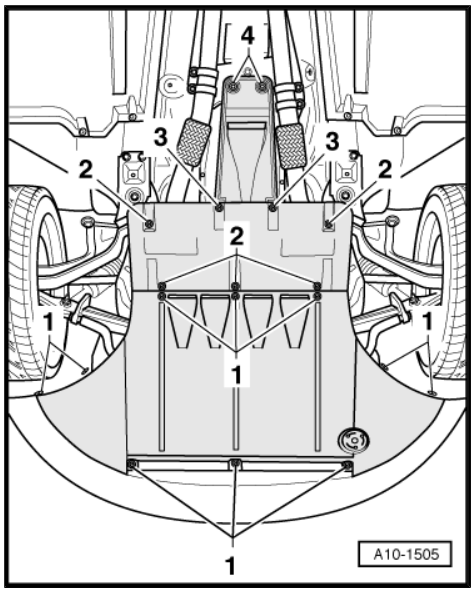

Note

Before removing, mark direction of rotation of poly V-belt with chalk or felt-tip pen. If the belt runs in the opposite direction when it is refitted, this can cause breakage.

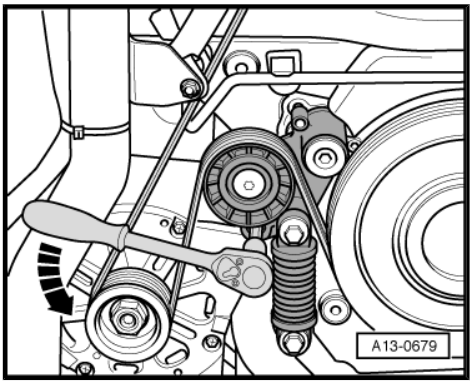

– To slacken poly V-belt, pivot belt tensioner in direction of -arrow- (use a lever with $^{3}/_{8}$" drive).

– Remove poly V-belt from alternator pulley.

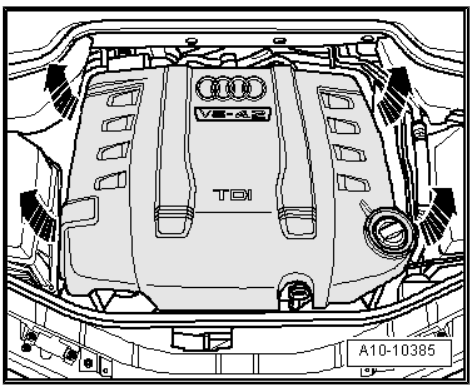

– Carefully pull engine cover panel off four retaining pins one after the other -arrows-.

– Pull off bonnet seal at lock carrier.

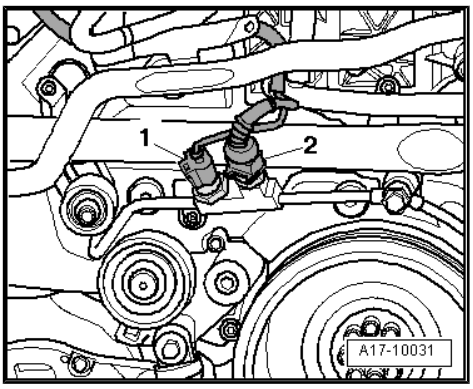

– Unplug electrical connectors -1- and -2-.

– Remove poly V-belt from above.

Protected by copyright. Copying for private or commercial purposes, in part or in whole, is not permitted unless authorised by AUDI AG. AUDI AG does not guarantee or accept any liability with respect to the correctness of information in this document. Copyright by AUDI AG.

Installing

Installation is carried out in the reverse order; note the following:

– Fit poly V-belt on pulleys.

1 - Alternator

2 - Tensioner for poly V-belt

3 - Idler roller

4 - Air conditioner compressor

5 - Idler roller

6 - Vibration damper

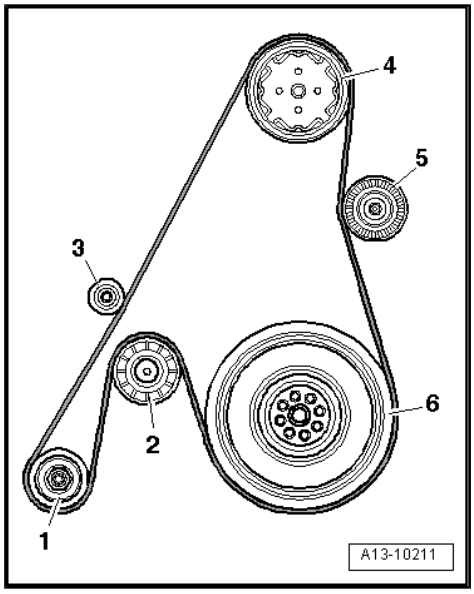

Note

When installing poly V-belt, make sure it is properly seated on pulleys.

– After installing poly V-belt, torque down bolts ⇒ Item 19 (page 60) for compression spring using torque wrench.

– Start engine and check that belt runs properly.

Tightening torques

Component		Nm
Bolts for compression spring to:	Cylinder block	22
	Tensioning lever	22

2.3 Removing and installing tensioner for poly V-belt

Removing

– Detach poly V-belt from tensioner ⇒ “2.2 Removing and installing poly V-belt”, page 60 .

– Remove bolts -arrows- and take off tensioner for poly V-belt.

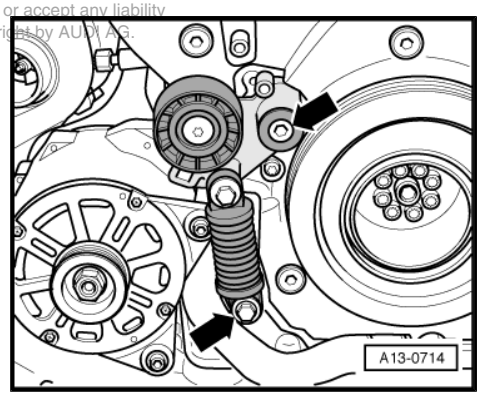

Installing

Installation is carried out in the reverse order; note the following:

– Install poly V-belt ⇒ page 60 .

Tightening torques

• ⇒ “2.1 Poly V-belt drive - exploded view”, page 59

This document is copyright protected. Private or commercial purposes, in part or in whole, is not permitted unless authorised by AUDI AG. AUDI AG does not guarantee or accept any liability with respect to the correctness of information in this document. Copyright by AUDI AG.

2.4 Removing and installing vibration damper

Removing

– Open quick-release fasteners -1- and remove noise insulation (front).

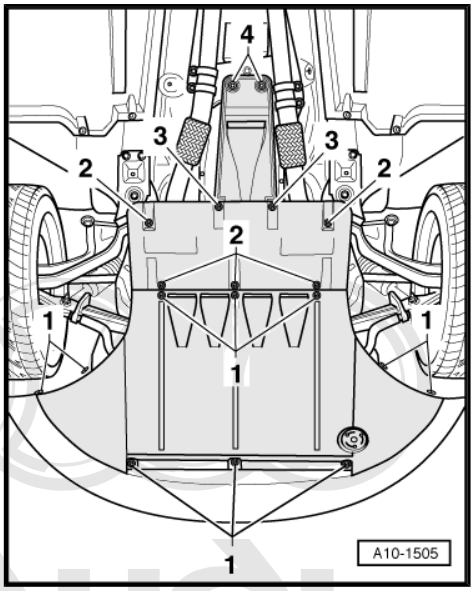

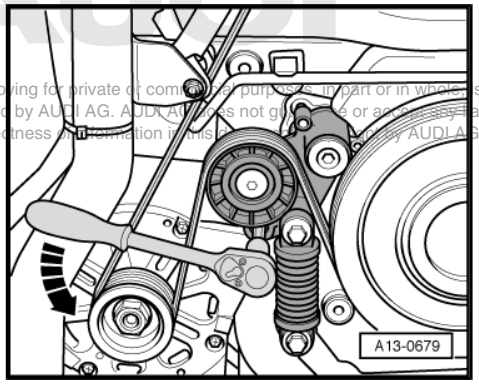

Note

Before removing, mark direction of rotation of poly V-belt with chalk or felt-tip pen. If the belt runs in the opposite direction when it is refitted, this can cause breakage.

Protected by copyright. Copying for private or commercial purposes, in part or in whole, is not permitted unless authorised by AUDI AG. AUDI AG does not give any warranty or accept any liability with respect to the correctness of information in this copy by AUDI AG.

– To slacken poly V-belt, pivot belt tensioner in direction of -arrow- (use a lever with $^{3}/_{8}$" drive).

– Remove poly V-belt from alternator pulley.

– Unscrew bolts -1- (8x).

– Detach washer -2-.

– Remove vibration damper -3- and damper weight.

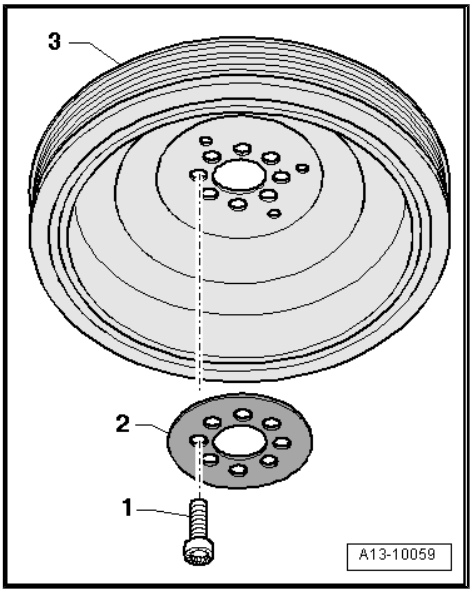

Installing

Installation is carried out in the reverse order; note the following:

– Install poly V-belt ⇒ page 60 .

– After installing poly V-belt, torque down bolts ⇒ Item 19 (page 60) for compression spring using torque wrench.

Tightening torques

Component		Nm
Vibration damper to crankshaft		30 + 45° [1)2)]
Bolts for compression spring to:	Cylinder block	22
	Tensioning lever	22

- [1)] Renew bolts.
- [2)] 45° = one eighth turn.

2.5 Oil seal and sealing flange (pulley end) - exploded view

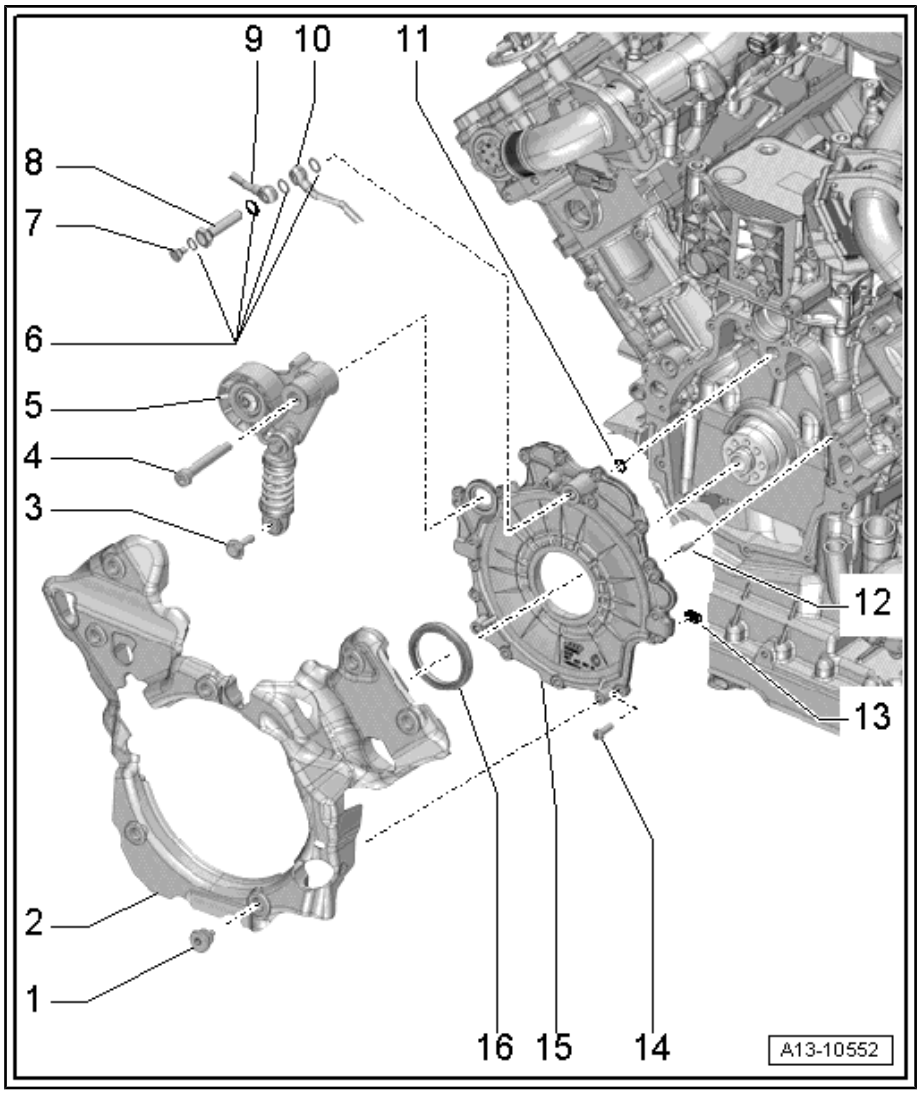

1 - Bolt
- ❑ 6 Nm

2 - Cover for sealing flange

3 - Bolt
- ❑ Tightening torque ⇒ Item 19 (page 60)

4 - Bolt
- ❑ Tightening torque ⇒ Item 30 (page 252)

5 - Poly V-belt tensioner
- ❑ Removing and installing ⇒ page 62

6 - Seals
- ❑ Renew

7 - Screw plug
- ❑ Tightening torque ⇒ Item 8 (page 251)

8 - Banjo bolt
- ❑ Tightening torque ⇒ Item 10 (page 251)

9 - Oil supply line
- ❑ To turbocharger (right-side)

10 - Oil supply line
- ❑ To turbocharger (left-side)

11 - O-ring
- ❑ Renew

12 - Dowel pin
- ❑ 2x

13 - Sealing element
- ❑ 2x
- ❑ Renew

14 - Bolt
- ❑ Tightening torque and sequence ⇒ page 65

15 - Sealing flange (pulley end)
- ❑ Removing and installing ⇒ page 68

16 - Oil seal for crankshaft (pulley end)
- ❑ Renewing ⇒ page 65

Protected by copyright. Copying for private or commercial purposes, in part or in whole, is not permitted unless authorised by AUDI AG. AUDI AG does not guarantee or accept any liability with respect to the correctness of information in this document. Copyright by AUDI AG.

Sealing flange (pulley end) - tightening torque and sequence

– Tighten bolts for sealing flange (pulley end) -arrow- in diagonal sequence and in stages to 9 Nm.

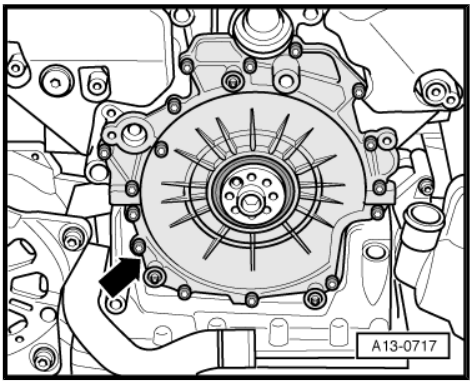

2.6 Renewing crankshaft oil seal (pulley end)

Special tools and workshop equipment required

Protected by copyright. Copying for private or commercial purposes, in part or in whole, is not permitted unless authorised by AUDI AG. AUDI AG does not guarantee or accept any liability with respect to the correctness of information in this document. Copyright by AUDI AG.

♦ Oil seal extractor - T40019-

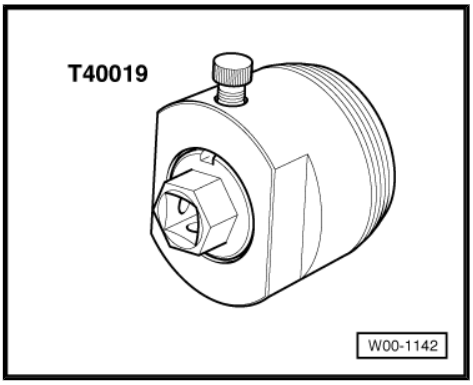

♦ Assembly tool - T40048 A-

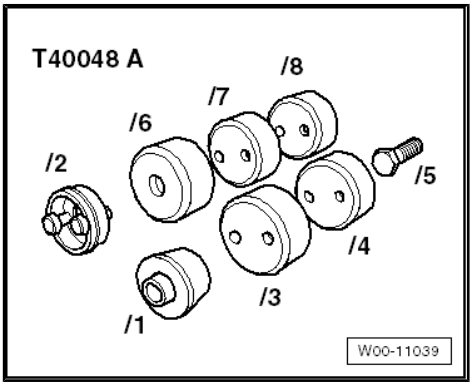

Procedure

– Open quick-release fasteners -1- and remove noise insulation (front).

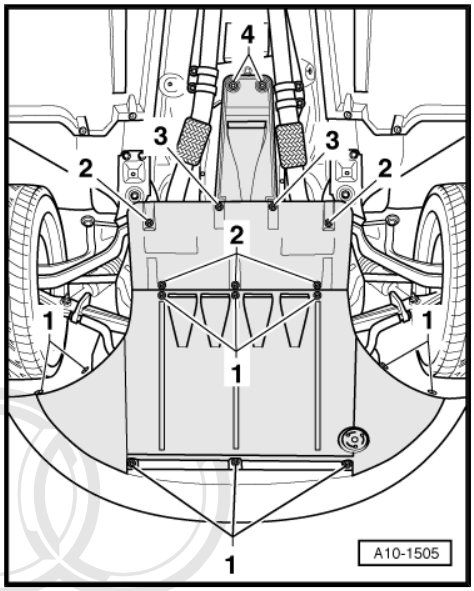

Note

Before removing, mark direction of rotation of poly V-belt with chalk or felt-tip pen. If the belt runs in the opposite direction when it is refitted, this can cause breakage.

Protected by copyright. Copying for private or commercial purposes, in part or in whole, is not permitted unless authorised by AUDI AG. AUDI AG does not guarantee or assume any liability with respect to the correctness of information in this document. Copyright by AUDI AG.

– To slacken poly V-belt, pivot belt tensioner in direction of -arrow- (use a lever with $^{3}/_{8}$" drive).

– Remove poly V-belt from alternator pulley.

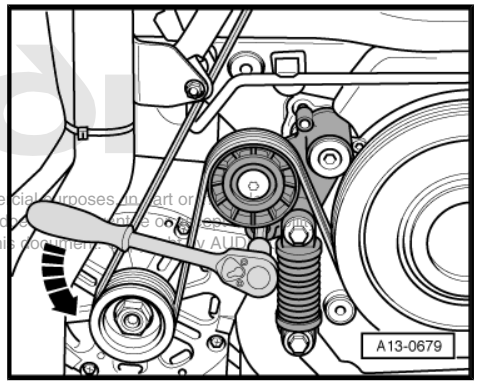

– Unscrew bolts -1- (8x).

– Detach washer -2-.

– Remove vibration damper -3- and damper weight.

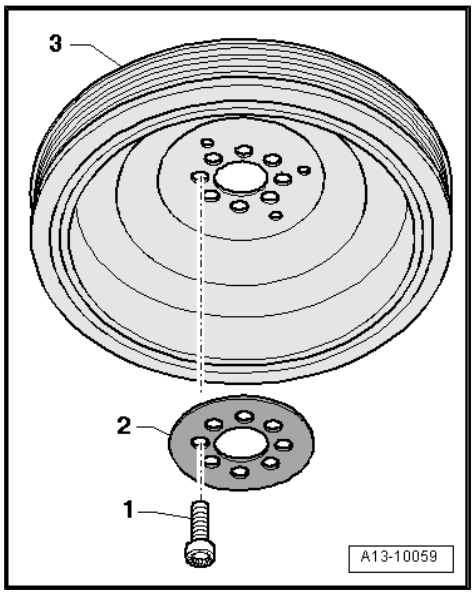

– Adjust the inner part of oil seal extractor - T40019- so it is flush with the outer part and lock in position with knurled screw.
– Lubricate threaded head of oil seal extractor, place it in position and screw it into oil seal as far as possible (applying firm pressure).
– Loosen knurled screw and turn inner part against crankshaft until the oil seal is pulled out.
– Clamp flats of oil seal extractor in vice.
– Remove oil seal with pliers.

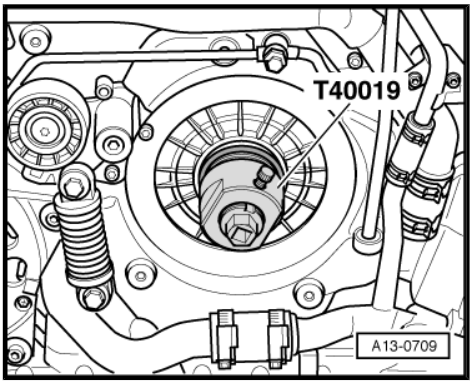

– Clean running surface and sealing surface.
– Fit assembly aid -T40048/1- onto assembly sleeve -T40048/2- and slide oil seal -1- onto assembly sleeve.
– Take off assembly aid.

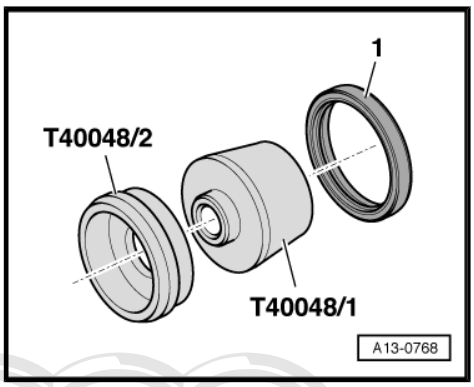

– Fit assembly sleeve -T40048/2- on crankshaft and slide oil seal -1- into sealing surface in engine.

Note

Leave assembly sleeve -T40048/2- in position on crankshaft for pressing in seal.

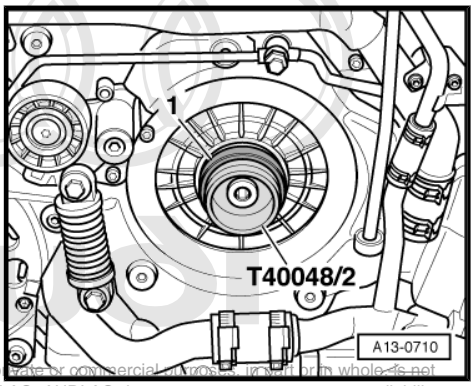

Protected by copyright. Copying for private or commercial purposes, in part or in whole, is not permitted unless authorised by AUDI AG. AUDI AG does not guarantee or accept any liability with respect to the correctness of information in this document. Copyright by AUDI AG.

– Apply press sleeve -T40048/3- to crankshaft using M8×55 mm bolts -arrows-.
– Screw in bolts hand-tight to start with.
– Tighten bolts alternately, $^1/_2$ turn at a time, to press in oil seal onto stop.

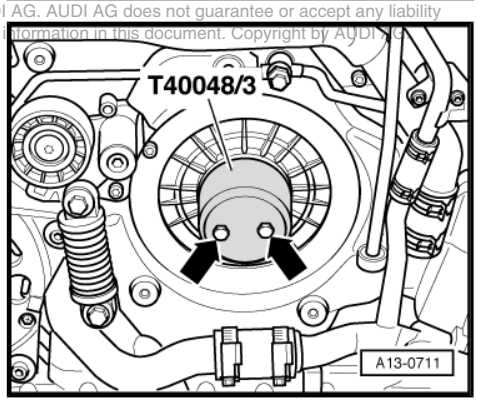

Remaining installation steps are carried out in reverse sequence; note the following:

– Install vibration damper ⇒ page 63 .
– Install poly V-belt ⇒ page 60 .
– After installing poly V-belt, torque down bolts ⇒ Item 19 (page 60) for compression spring using torque wrench.

Tightening torques

Component		Nm
Bolts for compression spring to:	Cylinder block	22
	Tensioning lever	22

2.7 Removing and installing sealing flange (front)

Special tools and workshop equipment required

- Electric drill with plastic brush attachment
- Safety goggles
- Sealant ⇒ Electronic parts catalogue

Removing

– Remove radiator ⇒ page 242 .
– Remove radiator cowl ⇒ page 246 .
– Remove coolant pipes (front) ⇒ page 227 .
– Unbolt tensioner for poly V-belt -arrows-.
– Remove tensioner and washer (located behind it).

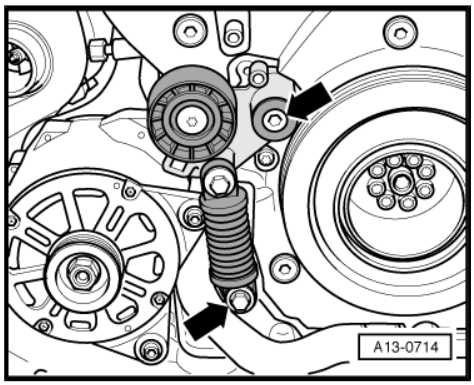

– Unscrew bolts -1- (8x).
– Detach washer -2-.
– Remove vibration damper -3- and damper weight.

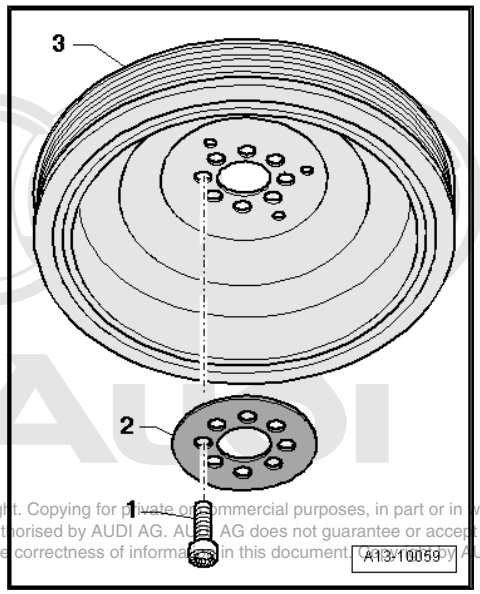

Protected by copyright. Copying for private or commercial purposes, in part or in whole, is not permitted unless authorised by AUDI AG. AUDI AG does not guarantee or accept any liability with respect to the correctness of information in this document. Copyright by AUDI AG.

– Remove cover for front sealing flange -arrows-.

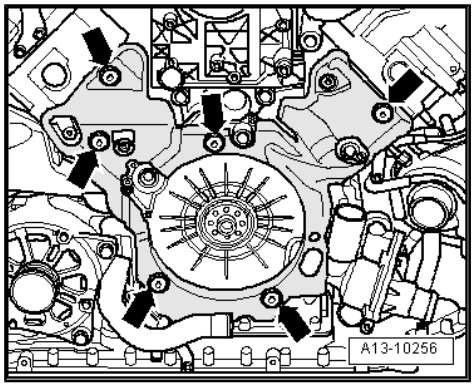

– Remove bolts and detach front sealing flange -arrow-.
– Drive out oil seal with sealing flange removed.

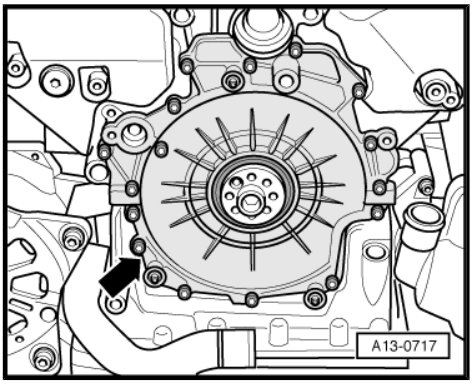

Installing

Installation is carried out in the reverse order; note the following:

Note

Renew gaskets, seals and O-rings.

– Cover open area of top section of sump with a clean cloth.
– Remove old sealant from grooves in sealing flange and from sealing surfaces.

WARNING

Wear safety goggles.

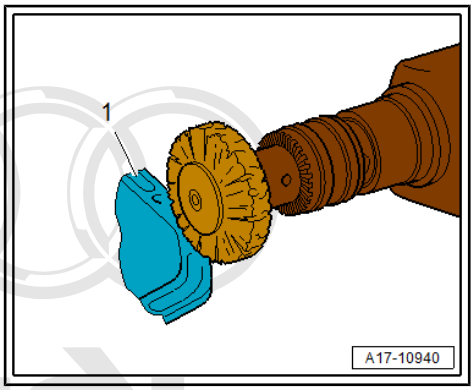

– Remove remaining sealant from sealing flange -1- and cylinder block/sump (top section) with rotating plastic brush or similar.
– Clean sealing surfaces; they must be free of oil and grease.

Protected by copyright. Copying for private or c... part in whole, is not permitted unless authorised by AUDI AG. AUD... antee or accept any liability with respect to the correctness of information in this document. Copyright by AUDI AG.

Note

Note the use-by date of the sealant.

– Cut off tube nozzle at front marking (diameter of nozzle approx. 1.5 mm).

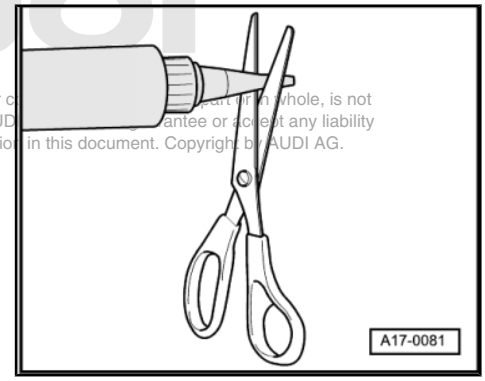

– Install sealing elements -1- and -3- and O-ring -2-.
– Apply bead of sealant -arrow- onto clean sealing surface of front sealing flange as illustrated.
• The bead of sealant must project 1.5 … 2.0 mm above the sealing surface.

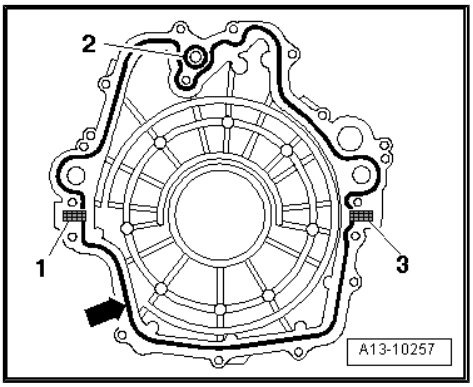

Note

♦ *The sealant bead must not be thicker than specified, otherwise excess sealant could enter the sump and clog the strainer in the oil pump.*
♦ *The front sealing flange must be installed within 5 minutes after applying sealant.*

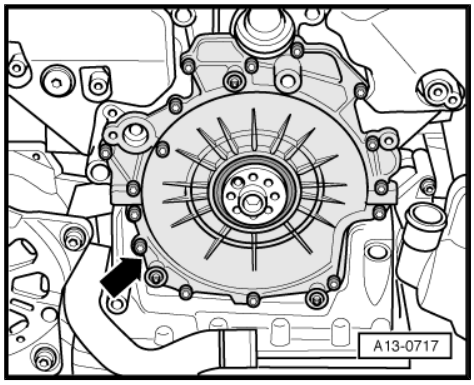

- Tighten bolts securing front sealing flange -arrow- in diagonal sequence and in stages.
- Install crankshaft oil seal (pulley end) ⇒ page 65 .
- Install coolant pipes (front) ⇒ page 227 .
- Install vibration damper ⇒ page 63 .
- Install poly V-belt ⇒ page 60 .
- After installing poly V-belt, torque down bolts ⇒ Item 19 (page 60) for compression spring using torque wrench.
- Install radiator cowl ⇒ page 246 .
- Install radiator ⇒ page 242 .

Note

Do not reuse coolant.

- Fill cooling system ⇒ page 216 .

Tightening torques

Component		Nm
Front sealing flange to cylinder block		9
Cover to sealing flange (front)		6
Bolts for compression spring to:	Cylinder block	22
	Tensioning lever	22

Protected by copyright. Copying for private or commercial purposes, in part or in whole, is not permitted unless authorised by AUDI AG. AUDI AG does not guarantee or accept any liability with respect to the correctness of information in this document. Copyright by AUDI AG.

3 Servicing work on timing chain end

⇒ “3.1 Drive plate - exploded view”, page 71

⇒ “3.2 Removing and installing drive plate”, page 71

⇒ “3.3 Renewing crankshaft oil seal (timing chain end)”, page 72

⇒ “3.4 Renewing oil seal for toothed belt drive sprocket”, page 74

⇒ “3.5 Vacuum pump - exploded view”, page 86

⇒ “3.6 Removing and installing vacuum pump”, page 88

3.1 Drive plate - exploded view

1 - Drive plate

- ❑ Removing and installing ⇒ page 71

2 - Washer

- ❑ 3.4 mm

3 - 30 Nm + 90° (1/4 turn) further

- ❑ Renew

4 - Dowel sleeve

5 - Centring sleeve

- ❑ For torque converter
- ❑ Check whether fitted

6 - Oil seal

- ❑ For crankshaft (timing chain end)
- ❑ Removing and installing ⇒ page 72

7 - Washer

- ❑ 1.5 mm

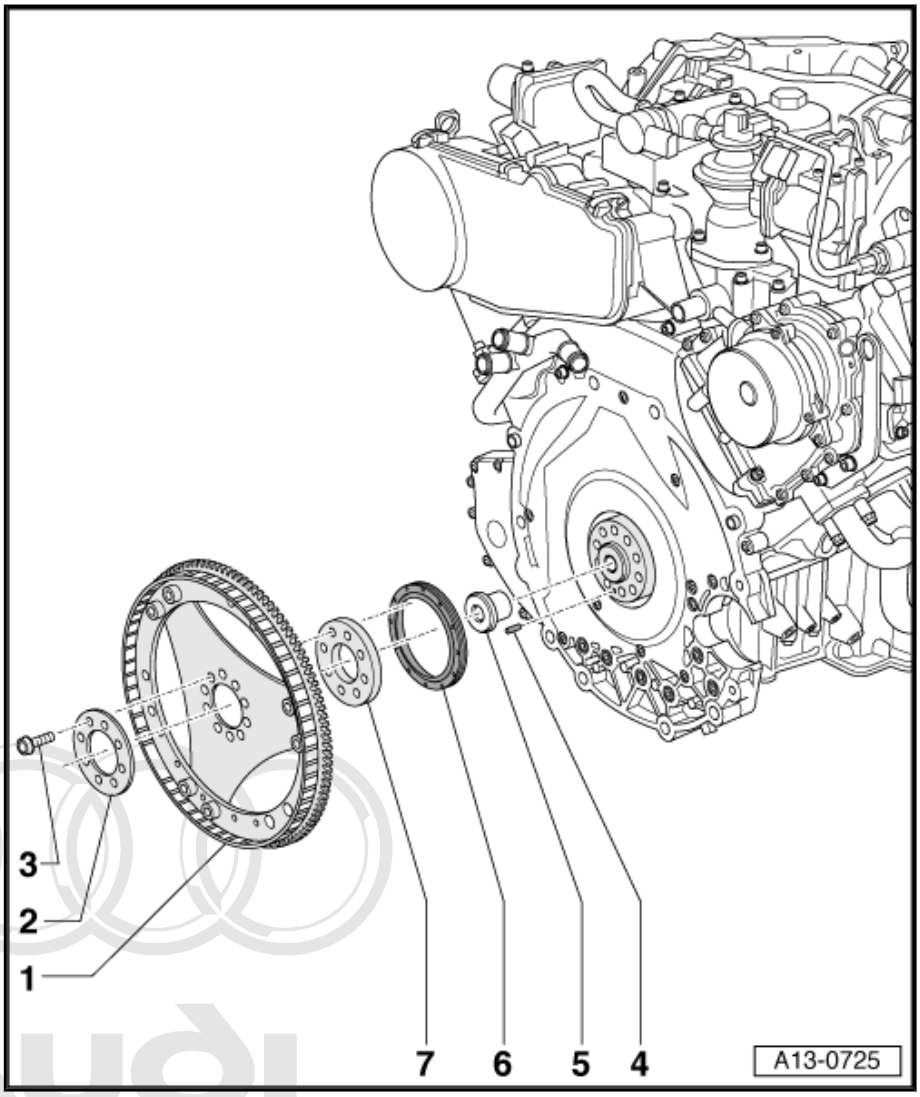

3.2 Removing and installing drive plate

Protected by copyright. Copying for private or commercial purposes, in part or in whole, is not permitted unless authorised by AUDI AG. AUDI AG does not guarantee or accept any liability with respect to the correctness of information in this document. Copyright by AUDI AG.

Special tools and workshop equipment required

♦ Counterhold tool - 10 - 201-

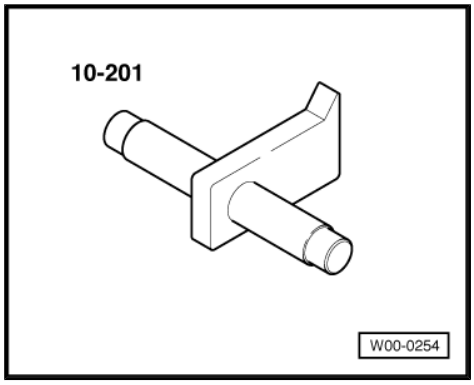

ted by copyright. Copying for private or commercial purposes, in part or in whole, is not permitted unless authorised by AUDI AG. AUDI AG does not guarantee or accept any liability of information in this document. Copyright by AUDI AG.

Removing

- Engine/gearbox removed.

– Attach counterhold tool - 10 - 201- in order to loosen bolts.

– Mark installation position of drive plate on crankshaft, as well as position of washers with a felt-tip pen.

– Unbolt drive plate.

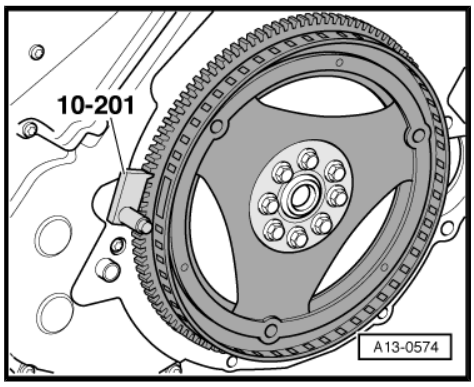

Installing

Installation is carried out in the reverse order; note the following:

– Install drive plate with washers according to markings made previously.

– Use new securing bolts.

– Reverse position of counterhold tool - 10 - 201- in order to tighten bolts.

Tightening torque

Component	Nm
Drive plate to crankshaft	30 + 90° 1)2)
• 1) Renew bolts. • 2) 90° = one quarter turn.	

3.3 Renewing crankshaft oil seal (timing chain end)

Special tools and workshop equipment required

♦ Fitting tool - T10122-

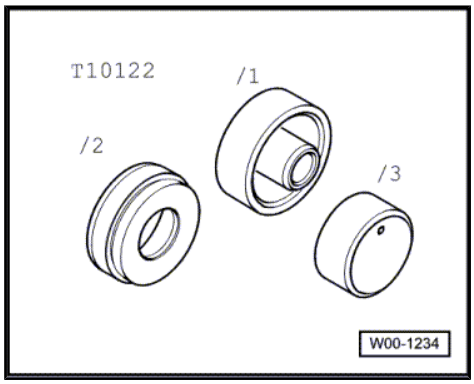

♦ Extractor tool - T20143-

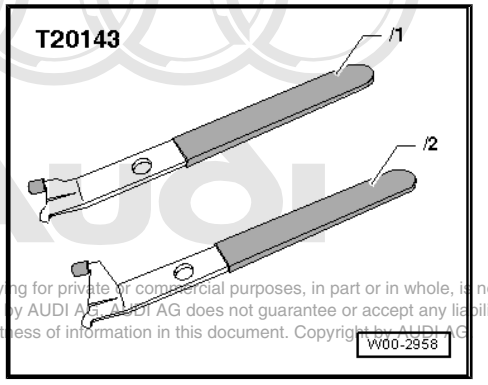

Protected by copyright. Copying for private or commercial purposes, in part or in whole, is not permitted unless authorised by AUDI AG. AUDI AG does not guarantee or accept any liability with respect to the correctness of information in this document. Copyright by AUDI AG

Procedure

- Engine/gearbox removed.

– Remove drive plate ⇒ page 71 .

– Pry out oil seal using extractor tool -T20143/2- .

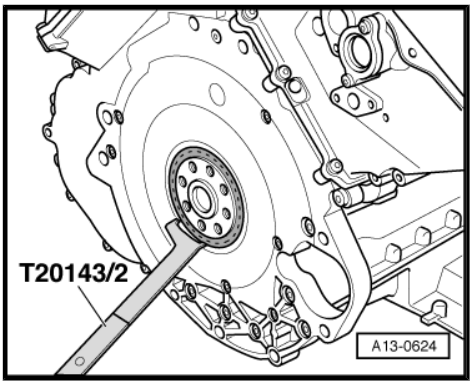

– Modify assembly sleeve -T10122/2- by drilling a hole for the dowel sleeve.

a - ∅ drilling = 8 mm

b - Distance from rim = 7 mm

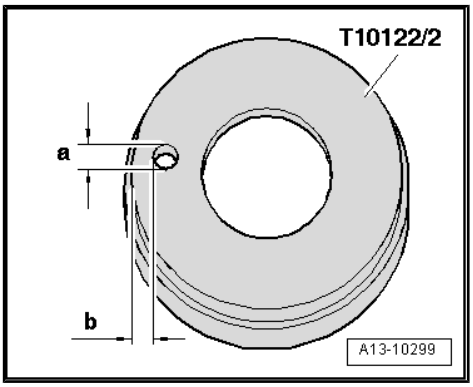

– Clean running surface and sealing surface.

– Fit assembly aid -T10122/1- onto assembly sleeve -T10122/2- and slide oil seal -A- onto assembly sleeve.

– Take off assembly aid.

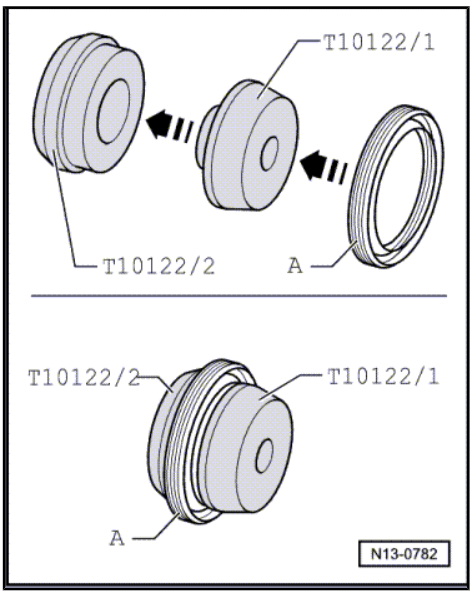

– Fit new oil seal -1- with guide sleeve - T10122/2- onto crankshaft.

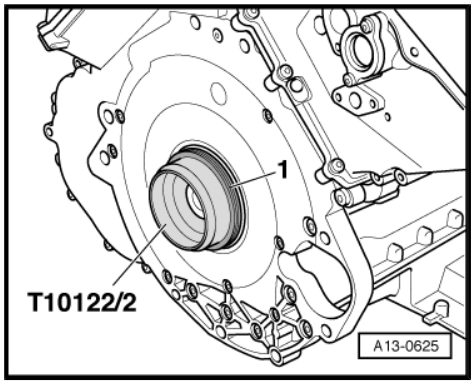

– Press in the oil seal with thrust sleeve -T10122/3- evenly so that it is flush all round.
– Install drive plate ⇒ page 71 .

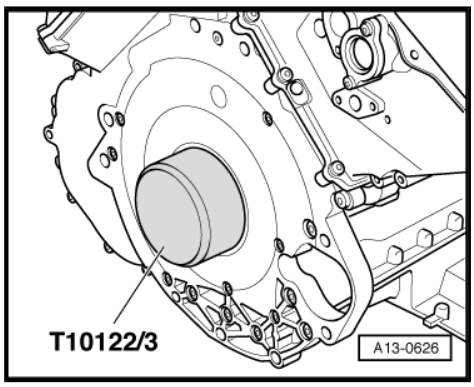

3.4 Renewing oil seal for toothed belt drive sprocket

Protected by copyright. Copying for private or commercial purposes, in part or in whole, is not permitted unless authorised by AUDI AG. AUDI AG does not guarantee or accept any liability with respect to the correctness of information in this document. Copyright by AUDI AG.

Special tools and workshop equipment required

- Support bracket - 10 - 222 A-
- Shackle - 10 - 222 A /12-
- Adapters - 10 - 222 A /21-
- Engine and gearbox jack - V.A.G 1383 A-
- Assembly tool - T10053-
- Counterhold tool - T10172- with -T10172/2-

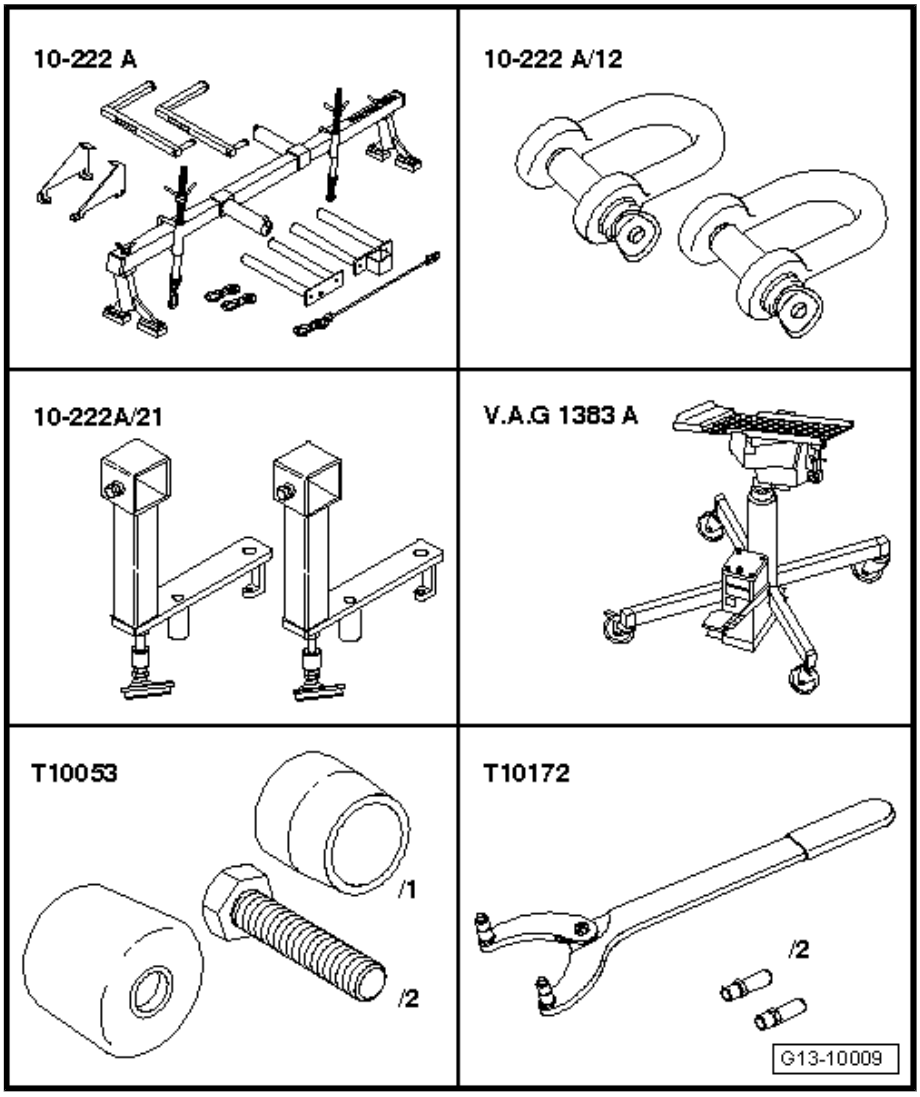

Procedure

Note

All cable ties which are released or cut open when removing must be fitted in the same position when installing.

– Carefully pull engine cover panel off four retaining pins one after the other -arrows-.

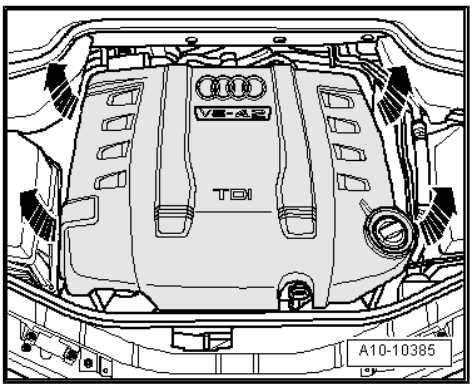

Protected by copyright. Copying for private or commercial purposes, in part or in whole, is not permitted unless authorised by AUDI AG. AUDI AG does not guarantee or accept any liability with respect to the correctness of information in this document. Copyright by AUDI AG.

– Remove cover above coolant expansion tank -arrows-.

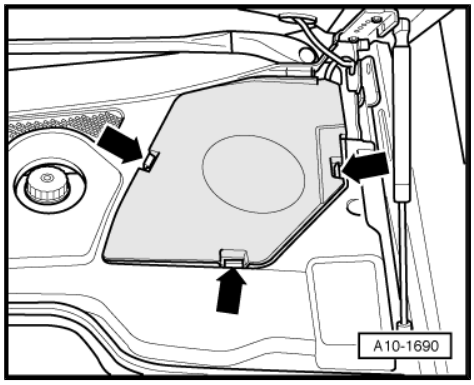

– Pull off rubber seal -1- on plenum chamber covers.
– Detach plenum chamber covers -2- and -3-.

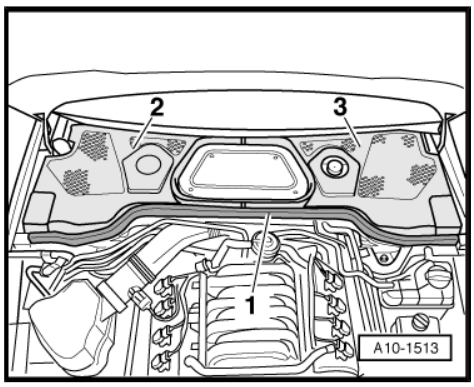

– Lever off caps on windscreen wiper arms with a screwdriver.
– Loosen hexagon nuts -arrows- several turns.
– Loosen wiper arms from wiper shafts by tilting slightly, remove hexagon nuts and take off wiper arms.
– Remove dust and pollen filter ⇒ Rep. gr. 87 .

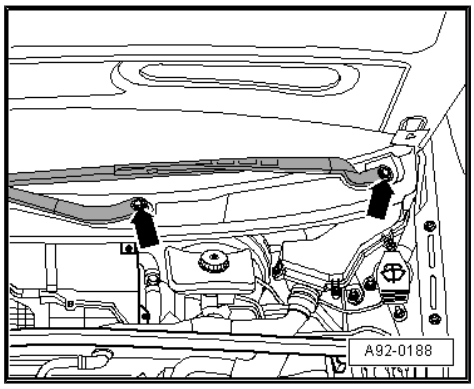

Note

Cover air duct at air conditioner housing with clean cloth to prevent anything falling in.

– Unscrew bolts on left and right -arrows- for cowl panel grille -1-.
– Carefully pull cowl panel grille off retainer at windscreen.

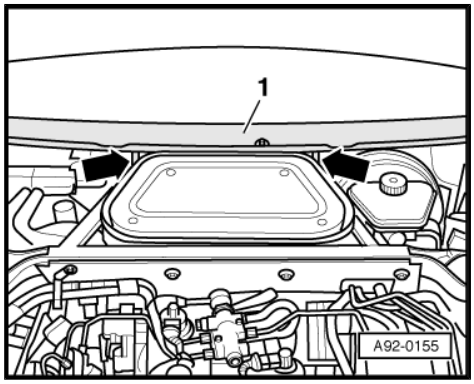

Protected by copyright. Copying for private or commercial purposes, in part or in whole, is not permitted unless authorised by AUDI AG. AUDI AG does not guarantee or accept any liability with respect to the correctness of information in this document. Copyright by AUDI AG.

– Unscrew body brace -arrow-.

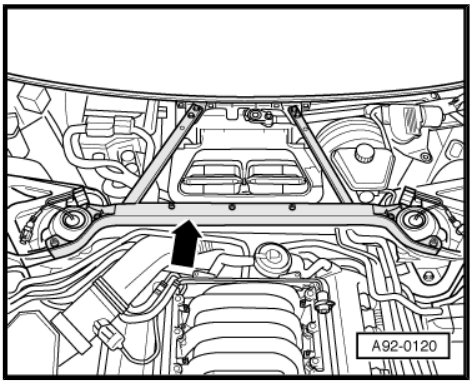

– Remove bolt -arrow-.
– Pivot bracket for air conditioner pipe to one side.

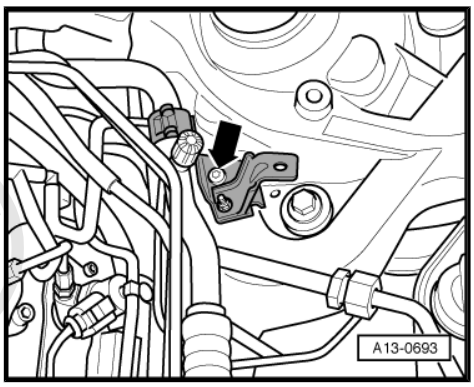

Note

To prevent damage to the refrigerant lines, ensure that the pipes and hoses are not stretched, kinked or bent.

– Remove bolts -arrows- on fuel filter bracket.

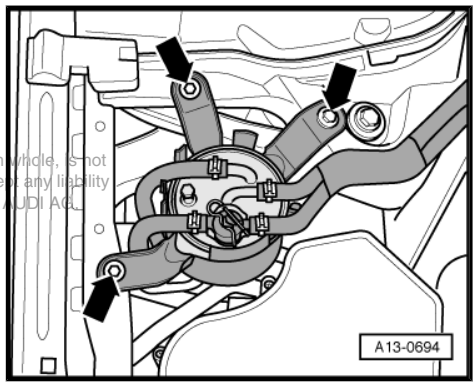

Note

Fuel filter remains in engine compartment with fuel lines connected.

Reproduction, copy, translation and storage in other media in whole or in part or in vehicle, is not permitted unless authorised by AUDI AG. AUDI AG does not guarantee or accept any liability with respect to the correctness of information in this document. Copyright by AUDI AG.

– Attach adapters - 10 - 222 A /21- without cross beam onto suspension turrets.
- Supports are marked for left and right side of vehicle.
- The centre resting point -2- of supports is positioned on securing point for body brace.
- The adapters - 10 - 222 A /21- are attached by means of the rear securing bolts -3- for the body brace.
- The knurled screw -1- must be screwed down until support plate rests on suspension turret.

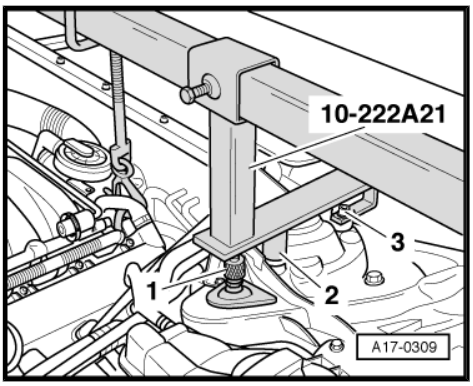

– Fit cross beam with adapters - 10 - 222 A /3- to adapters - 10 - 222 A /21- .
– Attach shackles - 10 - 222 A /12- to engine lifting eyes.
– Secure spindles of support bracket - 10 - 222 A- to shackles - 10 - 222 A /12- .
– Partly take up weight of engine with spindles of support bracket.

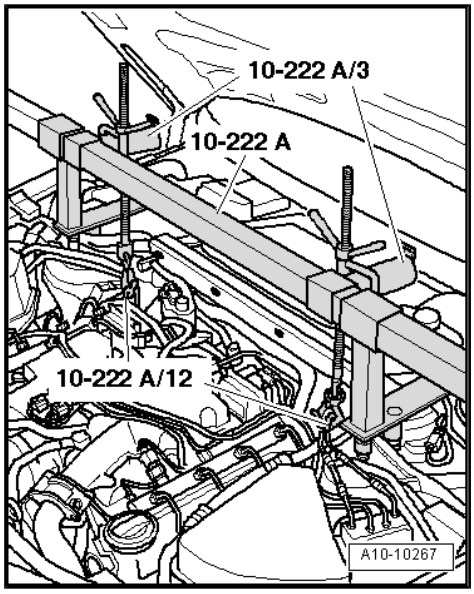

– Remove both front wheels.
– Release fasteners -1- and remove front noise insulation.
– Remove front sections of front wheel housing liners (left and right) ⇒ Rep. gr. 66 .

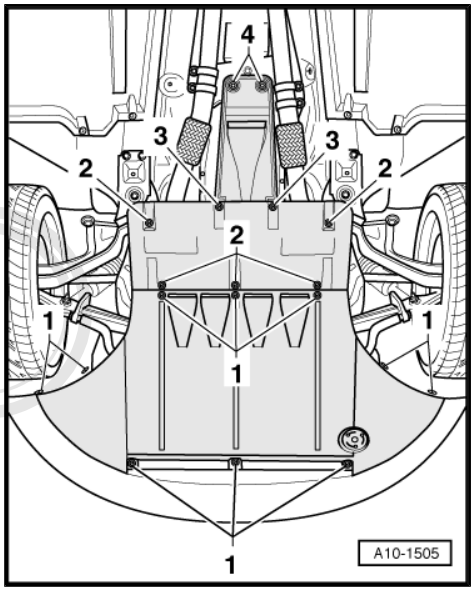

– Remove bolts -arrows- and detach bracket for charge air cooler (left-side).

Reproduction of this document or parts thereof for any purposes, in part or in whole, is not permitted unless authorised by AUDI AG. AUDI AG does not guarantee or accept any liability with respect to the correctness of information in this document. Copyright by AUDI AG.

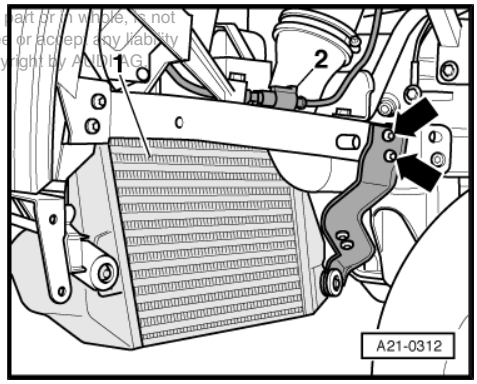

Note

Disregard items -1- and -2-.

– Remove bolt -arrow- for air intake pipe (left-side).

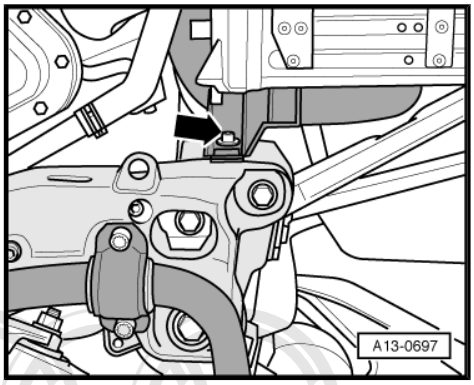

– Remove bolts -arrows- and detach bracket for charge air cooler (right-side).

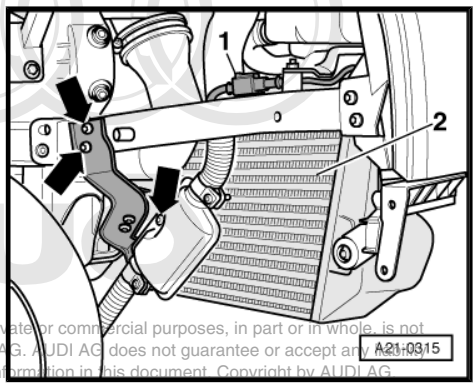

Note

Disregard items -1- and -2-.

Protected by copyright. Copying for private or commercial purposes, in part or in whole, is not permitted unless authorised by AUDI AG. AUDI AG does not guarantee or accept any liability with respect to the correctness of information in this document. Copyright by AUDI AG.

– Remove bolt -arrow- for air intake pipe (right-side).

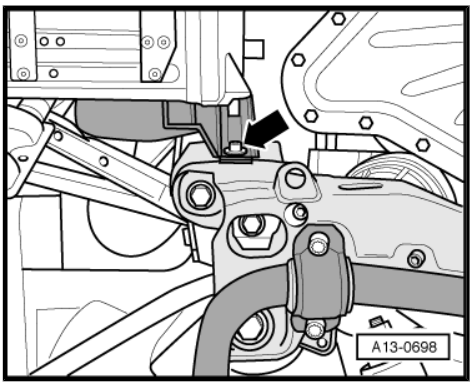

– Unplug electrical connector -2- at vehicle level sender (left and right).
– Detach coupling rod -1- at track control link (left and right).

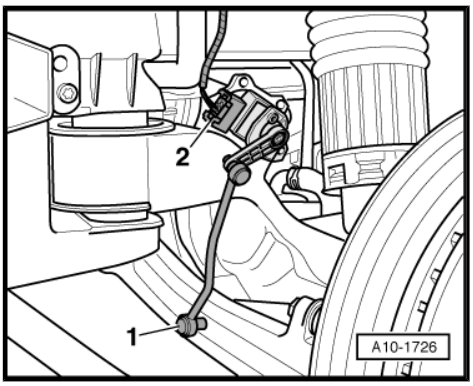

– Remove bolts (left and right) -arrows- evenly and detach anti-roll bar.

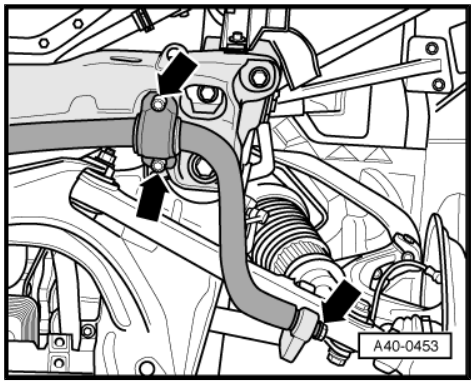

– Unbolt air spring struts (left and right) from track control links -arrow-.

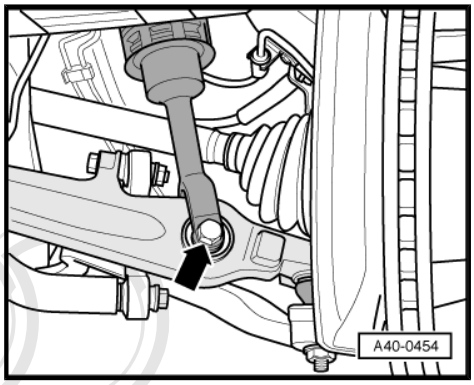

– Support engine cross member and subframe using engine and gearbox jack - V.A.G 1383 A- as shown in illustration.

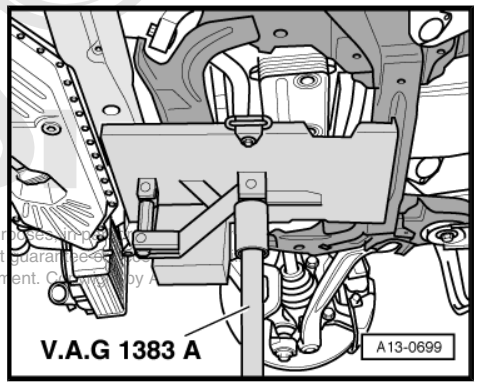

Protected by copyright. Copying for private or commercial purposes, in part or in whole, is not permitted unless authorised by AUDI AG. AUDI AG does not guarantee or assume liability with respect to the correctness of information in this document. Copyright by AUDI AG.

– Remove bolts for engine mountings -arrows- on both sides.

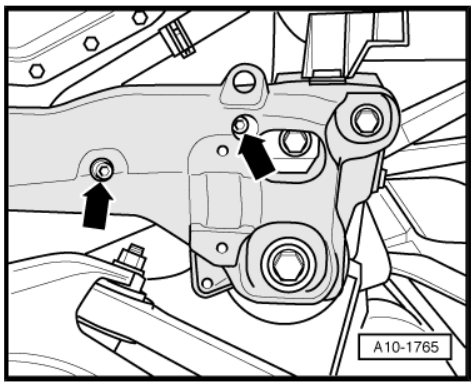

– Remove bolts -arrows- for front gearbox mountings (left and right).

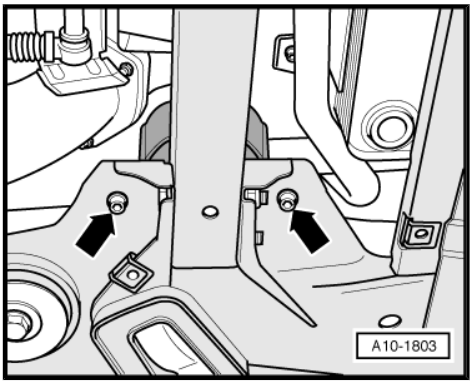

– Mark installation position of subframe on longitudinal member with felt-tip pen.
– Remove bolts -1- and -4-.
– Remove bolts -2- and -3- in a diagonal sequence and in stages.
– Slowly lower the subframe together with the engine cross member downwards.

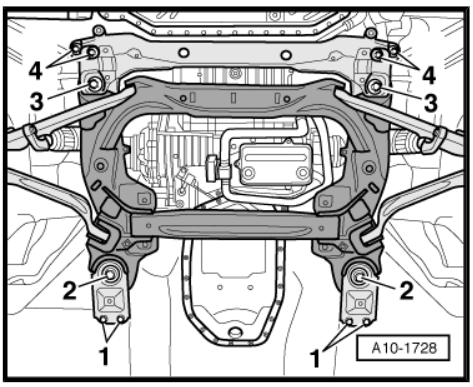

– Loosen clamps -1- and -2- and move to front.

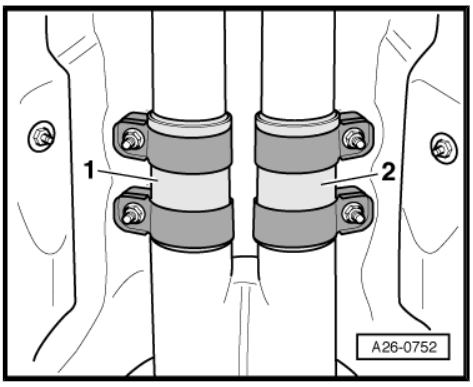

– Remove nuts on left and right -arrows- at centre bracket for exhaust pipes.
– Press studs in mounting forwards.

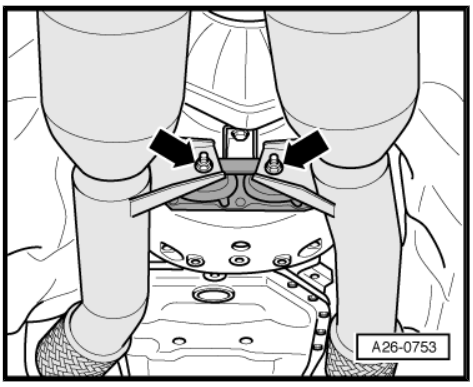

Protected by copyright. Copying for private or commercial purposes, in part or in whole, is not permitted unless authorised by AUDI AG. AUDI AG does not guarantee or accept any liability with respect to the correctness of information in this document. Copyright by AUDI AG.

– Remove bolts -arrows- at tunnel cross member.

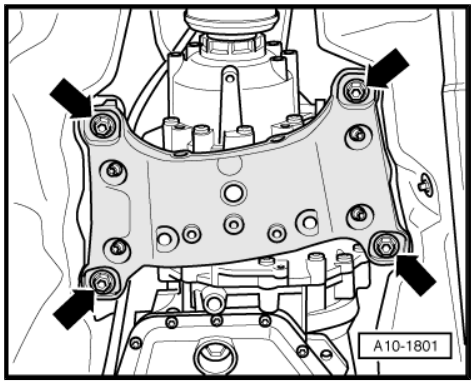

– Remove bolt -arrow- on mounting for torque reaction support.

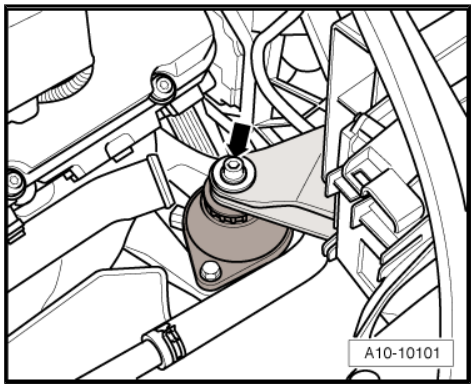

– Lower engine/gearbox assembly via spindles of support bracket - 10 - 222 A- until air pipe (right-side) makes contact with radiator cowl.

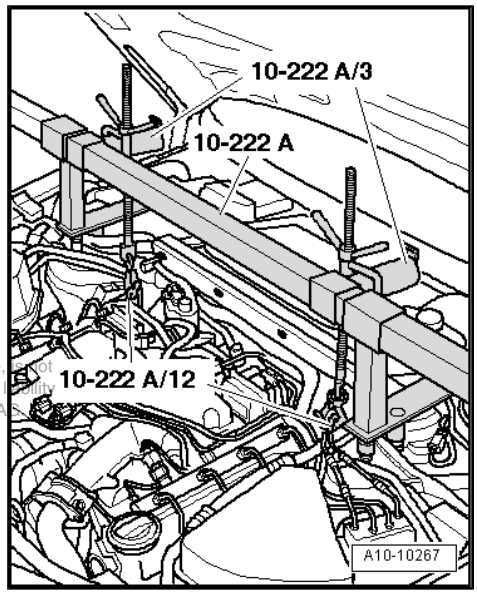

Protected by copyright. Copying for private or commercial purposes, in part or in whole, is not permitted unless authorised by AUDI AG. AUDI AG does not guarantee or accept any liability with respect to the correctness of information in this document. Copyright by AUDI AG.

– Disconnect vacuum hose -arrow- leading to brake servo.

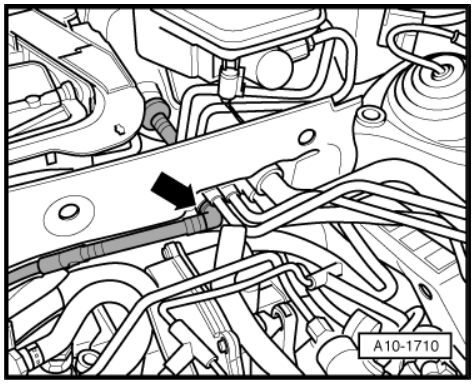

– Disconnect vacuum hose -arrow-.

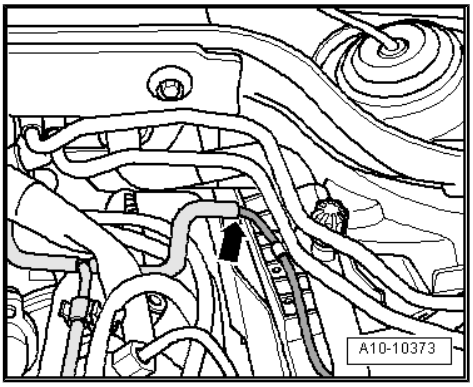

– Unplug electrical connectors -1-, -3-, -5- and -6-.
– Remove nut -2- and bolt -7- and detach bracket (right-side).
– Unscrew bolts -4- and remove bracket (left-side).

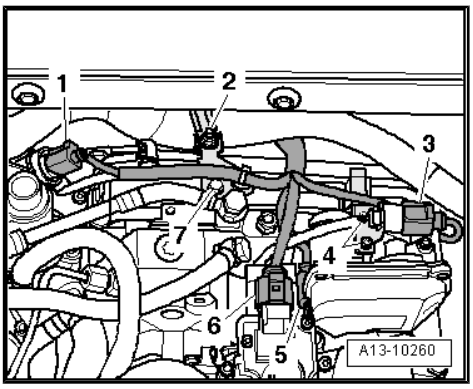

Note

The work sequence is illustrated from the rear end of the removed engine/gearbox assembly.

– Release retaining pegs -arrows- and detach toothed belt cover.
– Pivot toothed belt cover to the rear and disengage lugs on bottom side of toothed belt cover.

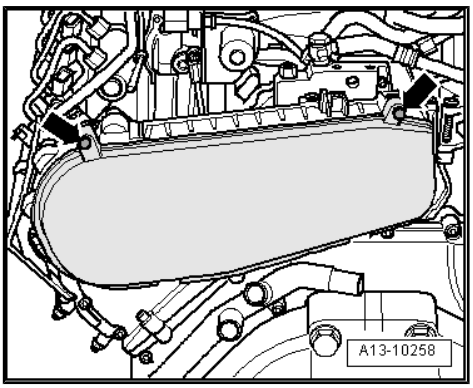

– Remove bolts -1- and -2-.
– Release clamp -arrow- and detach toothed belt cover (top section).

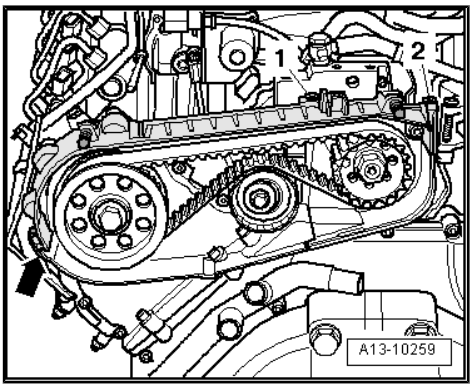

Note

Radio release tool - T10057- or another suitable tool can also be used to release clamp.

Protected by copyright. Copying for private or commercial purposes, in part or in whole, is not permitted unless authorised by AUDI AG. AUDI AG does not guarantee or accept any liability with respect to the correctness of information in this document. Copyright by AUDI AG.

– Unscrew bolt -arrow- for tensioning roller.
– Take off tensioning roller and toothed belt for high-pressure pump.

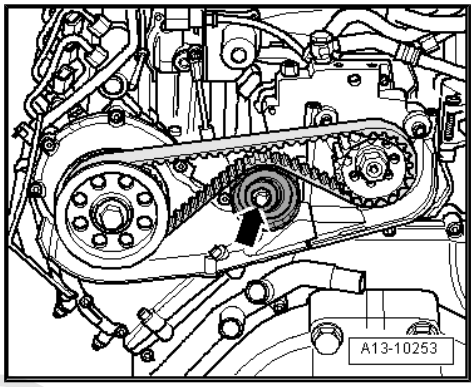

– Use counterhold tool - T10172- with -T10172/2- to loosen bolt for toothed belt drive sprocket.
– Remove bolt and take off toothed belt drive sprocket.

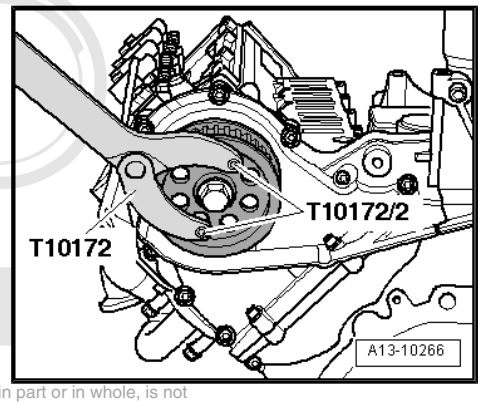

Protected by copyright. Copying for private or commercial purposes, in part or in whole, is not permitted unless authorised by AUDI AG. AUDI AG does not guarantee or accept any liability with respect to the correctness of information in this document. Copyright by AUDI AG.

– Remove circlip -2-.
– Pull out adapter -1- for oil seal.
– Press oil seal out of adapter.

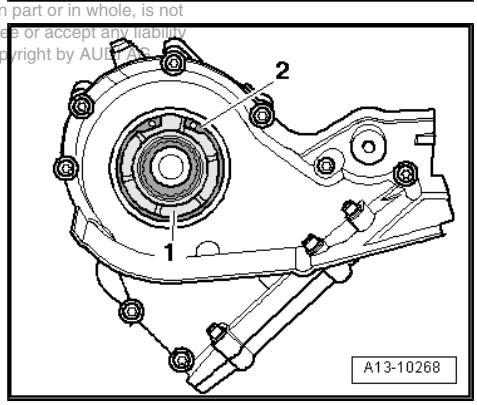

– Drive oil seal -2- into adapter -1- (use assembly tool - T10053-).

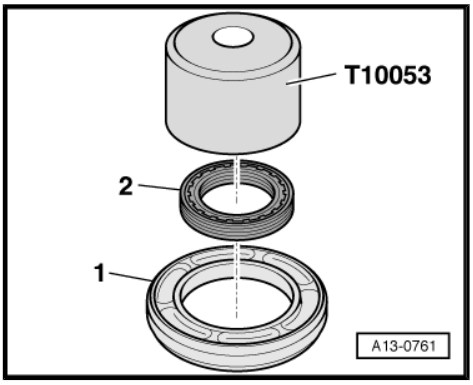

Remaining installation steps are carried out in reverse sequence; note the following:

Note

Renew seals and O-rings.

– Install toothed belt for high-pressure pump ⇒ Rep. gr. 23 .
– Install subframe ⇒ Rep. gr. 40 .
– Tighten subframe bolts only to specified torque (do not turn further). Do not tighten bolts to final setting until after wheel alignment check has been performed ⇒ Rep. gr. 40 .

WARNING

The vehicle must not be driven at this stage.

– Install anti-roll bar ⇒ Rep. gr. 40 .
– Install front sections of front wheel housing liners (left and right) ⇒ Rep. gr. 66 .

Protected by copyright. Copying for private or commercial purposes, in part or in whole, is not permitted unless authorised by AUDI AG. AUDI AG does not guarantee or accept any liability with respect to the correctness of information in this document. Copyright by AUDI AG.

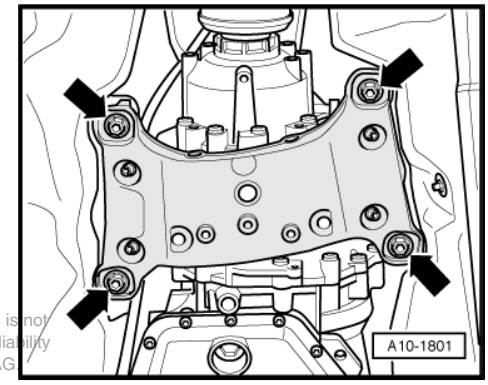

- Tighten bolts -arrows- at tunnel cross member.
- Install particulate filter/main catalytic converter: left-side ⇒ page 309 , right-side ⇒ page 310 .
- Align exhaust system so it is free of stress ⇒ page 313 .
- Install body brace ⇒ Rep. gr. 40 .
- Install and adjust wiper arms ⇒ Electrical system; Rep. gr. 92 .
- Install dust and pollen filter ⇒ Rep. gr. 87 .
- Install mounting for torque reaction support ⇒ page 48 .
- Install engine cross member and engine mounting ⇒ page 46 .
- Perform wheel alignment check ⇒ Rep. gr. 44 .

Protected by copyright. Copying for private or commercial purposes, in part or in whole, is not permitted unless authorised by AUDI AG. AUDI AG does not guarantee or accept any liability with respect to the correctness of information in this document. Copyright by AUDI AG

WARNING

Tighten bolts for subframe to final setting after performing wheel alignment check.

Tightening torques

Component	Nm
Toothed belt sprocket to camshaft	75 + 45° [1]
Tunnel cross member to body	40
Gearbox mounting to subframe	23
Air pipe to engine cross member	9
Bracket for charge air cooler to body	9
Bracket for refrigerant line to body	9

- [1] 45° = one eighth turn.

3.5 Vacuum pump - exploded view

1 - 10 Nm

2 - Vacuum pump

- ❑ Removing and installing ⇒ page 88

3 - Vacuum hose

- ❑ Secure with correct type of hose clips (as original equipment) ⇒ Electronic parts catalogue

4 - Hose clip

5 - O-ring

- ❑ Renew

6 - O-ring

- ❑ Renew

7 - Inlet camshaft

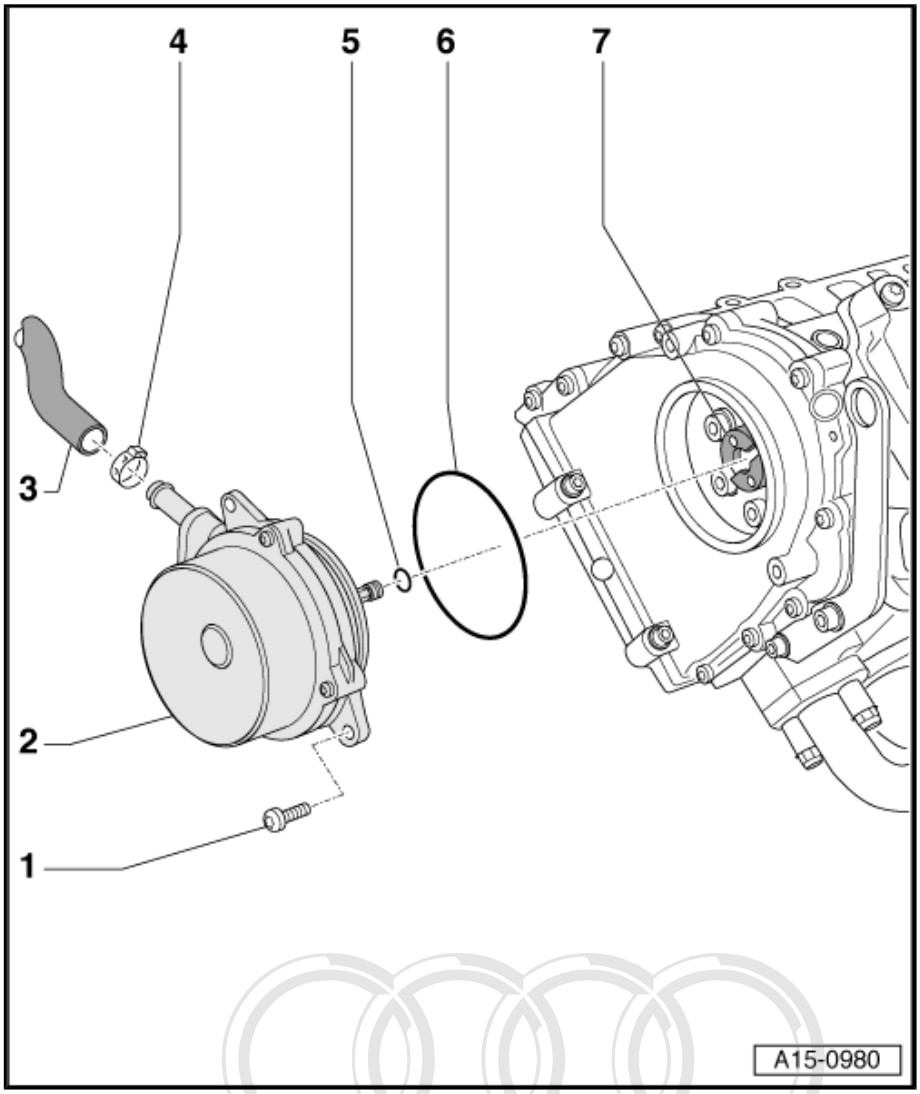

Protected by copyright. Copying for private or commercial purposes, in part or in whole, is not permitted unless authorised by AUDI AG. AUDI AG does not guarantee or accept any liability with respect to the correctness of information in this document. Copyright by AUDI AG.

3.6 Removing and installing vacuum pump

Special tools and workshop equipment required

- Torque wrench - V.A.G 1331-
- Ratchet - V.A.G 1331/1-
- Open end spanner insert, AF 19 - V.A.G 1331/5-
- Open end spanner insert, AF 17 - V.A.G 1331/6-

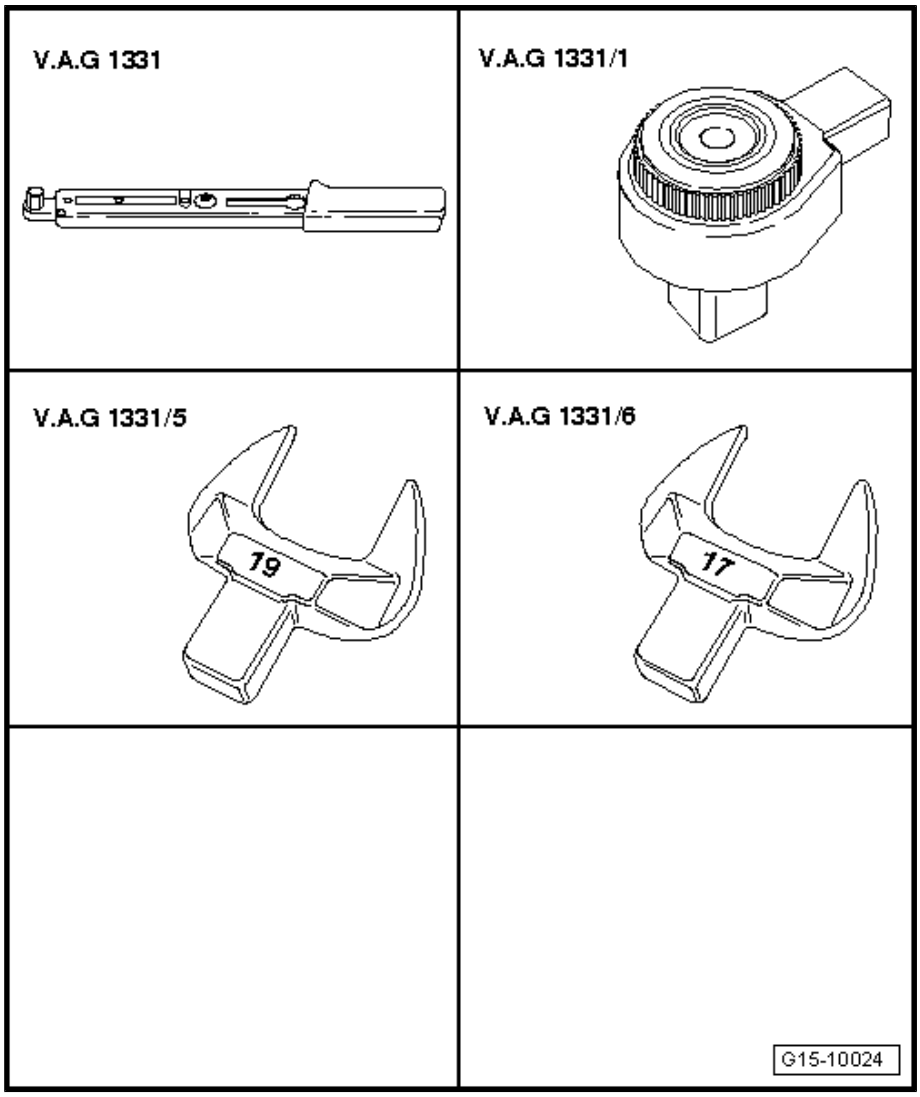

- Engine bung set - VAS 6122-

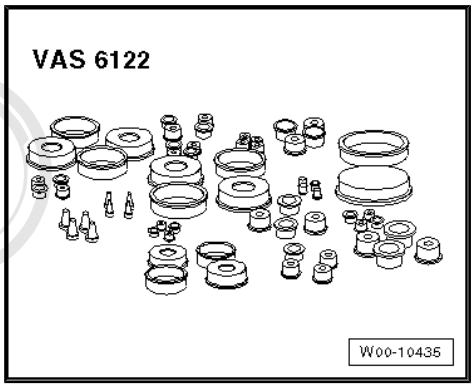

Protected by copyright. Copying for private or commercial purposes, in part or in whole, is not permitted unless authorised by AUDI AG. AUDI AG does not guarantee or accept any liability with respect to the correctness of information in this document. Copyright by AUDI AG.

Removing

– Drain off coolant ⇒ page 215 .

– Carefully pull engine cover panel off four retaining pins one after the other -arrows-.

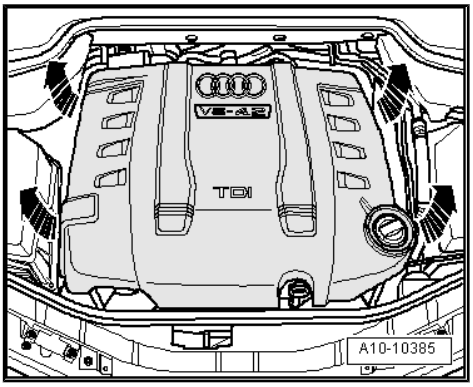

> **Caution**
>
> *Rules for cleanliness when working on the injection system* *⇒ page 5* *.*

– Disconnect fuel return line -1- and fuel supply line -2- from fuel filter.

– Seal off open lines and connections with clean plugs from engine bung set - VAS 6122- .

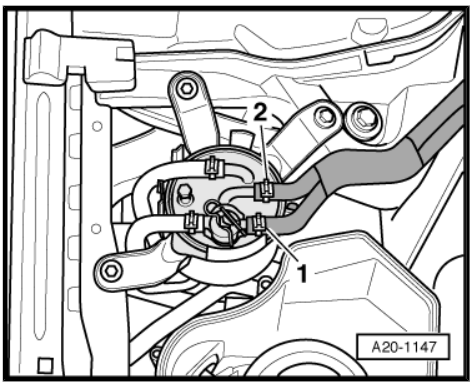

– Unplug electrical connector -arrow- at fuel temperature sender - G81- and move fuel lines clear.

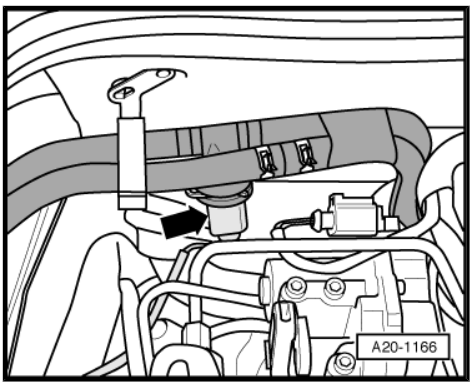

– Loosen union nuts -1- and -3-.

– Unscrew bolt -2- and detach high-pressure pipe.

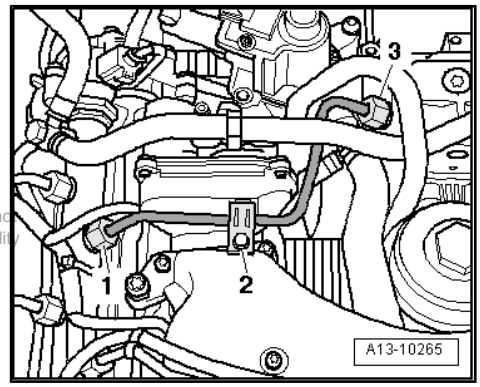

Protected by copyright. Copying for private or commercial purposes, in part or in whole, is not permitted unless authorised by AUDI AG. AUDI AG does not guarantee or accept any liability with respect to the correctness of information in this document. Copyright by AUDI AG.

– Unplug electrical connector -1-.

– Remove bolts -arrows- and take off control motor for exhaust gas recirculation - V339- (left-side).

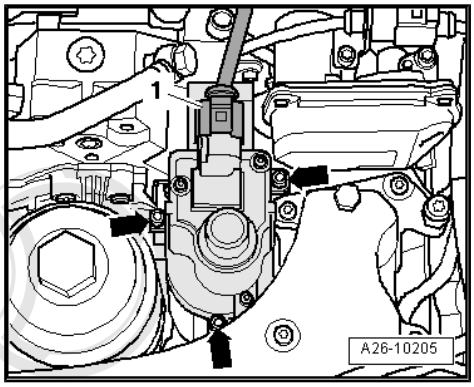

– Unscrew bolt -4- and remove coolant hose/pipe connection.

– Detach coolant hoses -2- and -6-.

– Remove bolts -1-, -3- and -5- and detach connection for exhaust gas recirculation.

Protected by copyright. Copying for private or commercial purposes, in part or in whole, is not permitted unless authorised by AUDI AG. AUDI AG does not guarantee or assume liability with respect to the correctness of information in this document. Copyright by AUDI AG.

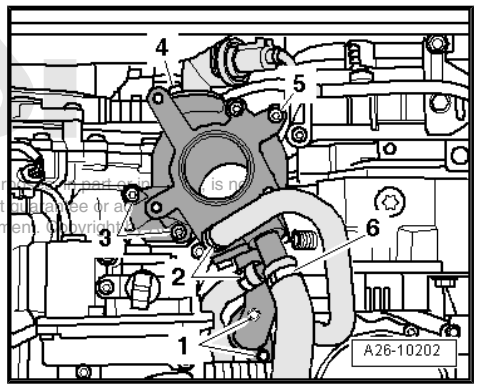

– Disconnect coolant hose at bulkhead -arrow-.

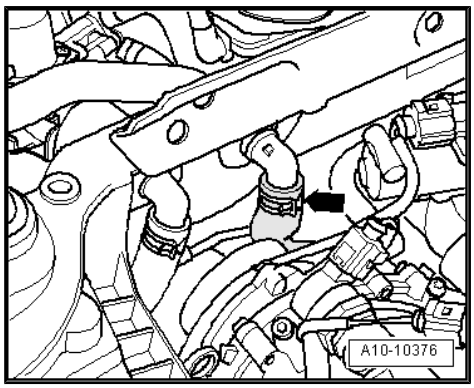

– Detach vacuum hose -1- from vacuum pump.

– Remove bolts -2- and -3- and detach vacuum pump.

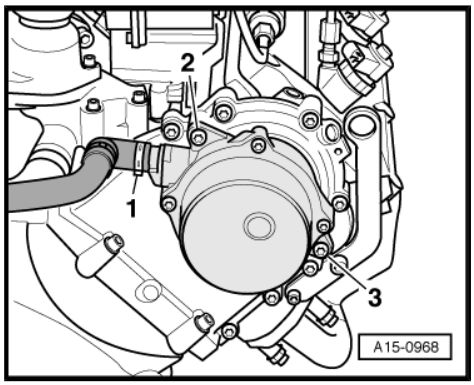

Installing

Installation is carried out in the reverse order; note the following:

Note

- *Renew seals and O-rings.*
- *Secure all hose connections with the correct type of hose clips (same as original equipment) ⇒ Electronic parts catalogue .*

– Set drive lugs of vacuum pump so they engage in slots on camshaft when pump is fitted -arrow-.

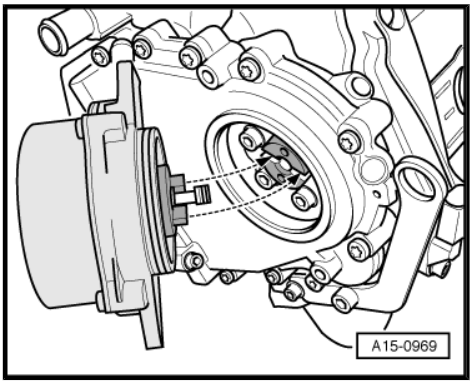

– Tighten union nuts on high-pressure pipes hand-tight initially.
– Ensure that high-pressure pipes are not under tension.
– To tighten union of high-pressure pipe at high-pressure pump, use torque wrench - V.A.G 1331- with ratchet - V.A.G 1331/1- and open end spanner insert AF 17 - V.A.G 1331/6- .

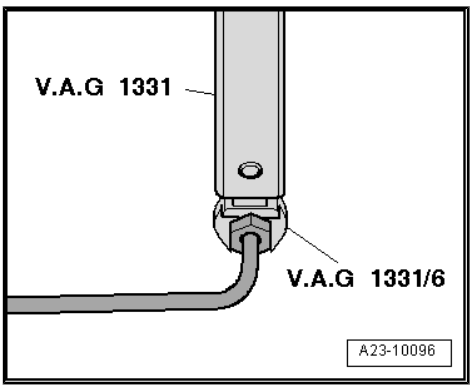

– To tighten unions of high-pressure pipes at rail elements, use torque wrench - V.A.G 1331- with ratchet - V.A.G 1331/1- and tool insert, AF 19 - V.A.G 1331/5- .
– Install control motor for exhaust gas recirculation - V339- (left-side) ⇒ page 317 .

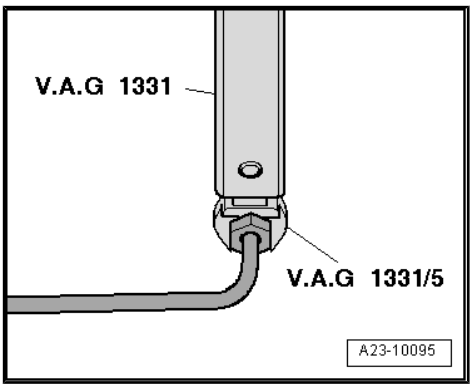

Note

Do not reuse coolant.

– Fill cooling system ⇒ page 216 .

Tightening torque

Component		Nm
Vacuum pump to timing chain cover		9
Connection for exhaust gas recirculation to:	Cylinder head	9
	Connecting pipe	9
Coolant hose/pipe connection to connection for exhaust gas recirculation		9
High-pressure pipe to:	High-pressure pump	25
	Rail element	25

Protected by copyright. Copying for private or commercial purposes, in part or in whole, is not permitted unless authorised by AUDI AG. AUDI AG does not guarantee or accept any liability with respect to the correctness of information in this document. Copyright by AUDI AG.

4 Removing and installing crankshaft

⇒ “4.1 Crankshaft - exploded view”, page 92

⇒ “4.2 Allocation of main bearing shells for new crankshafts”, page 94

⇒ “4.3 Allocation of crankshaft bearing shells for retaining frame without visible colour coding”, page 95

⇒ “4.4 Crankshaft dimensions”, page 95

⇒ “4.5 Measuring axial clearance”, page 95

⇒ “4.6 Measuring radial clearance”, page 96

4.1 Crankshaft - exploded view

Note

When carrying out repairs, secure engine to engine and gearbox support - VAS 6095- ⇒ page 38 .

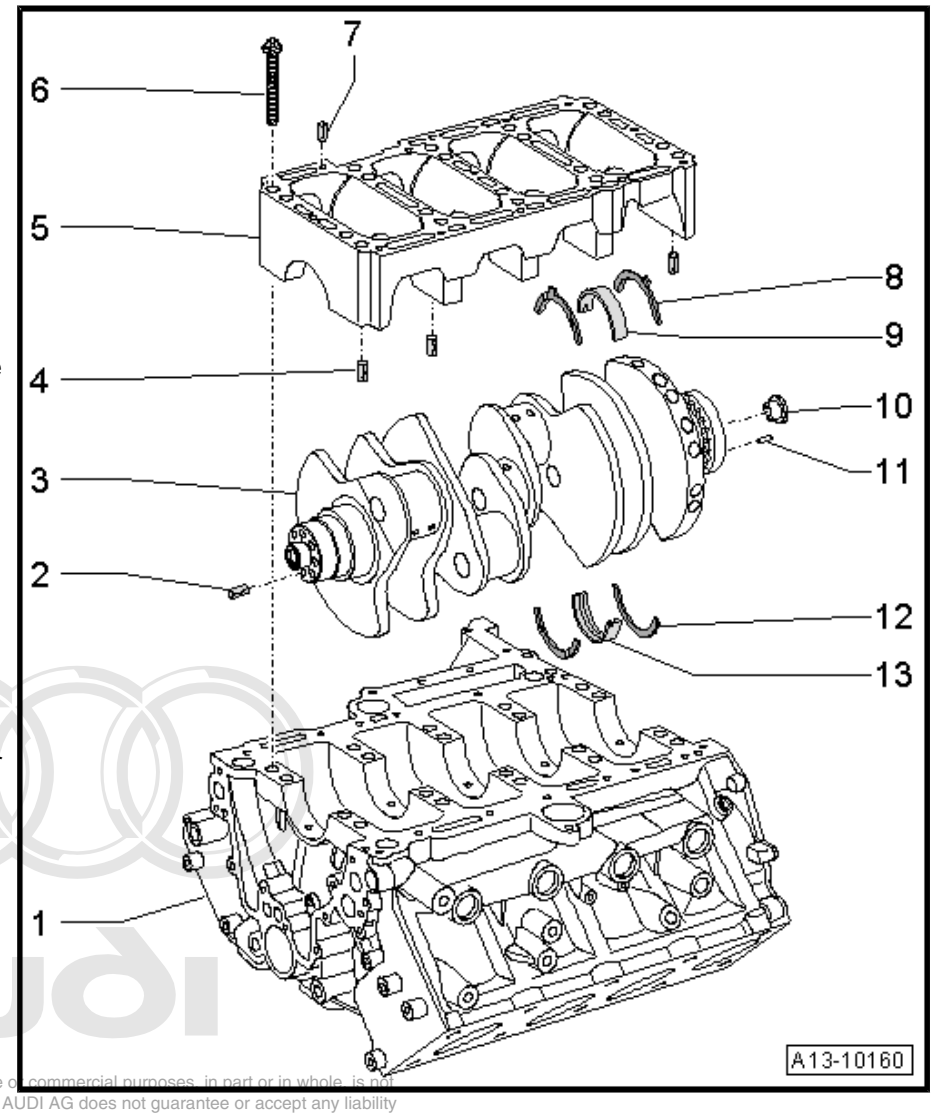

1 - Cylinder block
- ❑ Matched to -item 5-

2 - Dowel sleeve for vibration damper

3 - Crankshaft
- ❑ Measuring axial clearance ⇒ page 95
- ❑ Measuring radial clearance ⇒ page 96
- ❑ Do not rotate the crankshaft when checking the radial clearance
- ❑ Crankshaft dimensions ⇒ page 95

4 - Dowel sleeve
- ❑ 3x
- ❑ Insert in retaining frame
- ❑ Installation position ⇒ page 93

5 - Retaining frame
- ❑ Matched to -item 1-
- ❑ Tightening sequence for securing bolts ⇒ page 93

6 - Bolts for retaining frame
- ❑ Renew
- ❑ Use old bolts when measuring radial clearance
- ❑ Tightening sequence ⇒ page 93

Protected by copyright. Copying for private or commercial purposes, in part or in whole, is not permitted unless authorised by AUDI AG. AUDI AG does not guarantee or accept any liability with respect to the correctness of information in this document. Copyright by AUDI AG.

7 - Dowel sleeve for oil pump

8 - Thrust washer
- ❑ Only fitted on 4th crankshaft bearing

- ❑ Oil grooves face outwards
- ❑ Make sure it engages in retaining frame
- ❑ Measuring axial clearance of crankshaft ⇒ page 95

9 - Bearing shell

- ❑ For retaining frame (without oil groove)
- ❑ Renew used bearing shells
- ❑ Install new bearing shells for retaining frame with correct coloured markings: version I ⇒ page 94 , version II ⇒ page 95

10 - Bearing bush for torque converter

- ❑ Ensure proper fitting in crankshaft

11 - Dowel pin

- ❑ For drive plate
- ❑ Check that pin is firmly seated in crankshaft

12 - Thrust washer

- ❑ Only fitted on 4th crankshaft bearing
- ❑ Oil grooves face outwards
- ❑ Measuring axial clearance of crankshaft ⇒ page 95

13 - Bearing shell

- ❑ For cylinder block (with oil groove)
- ❑ Renew used bearing shells
- ❑ Install new bearing shells for the cylinder block with the correct coloured markings ⇒ page 94

Protected by copyright. Copying for private or commercial purposes, in part or in whole, is not permitted unless authorised by AUDI AG. AUDI AG does not guarantee or accept any liability with respect to the correctness of information in this document. Copyright by AUDI AG.

Fitting location of dowel sleeves

– Check that dowel sleeves -arrows- are inserted in retaining frame at positions shown in illustration.

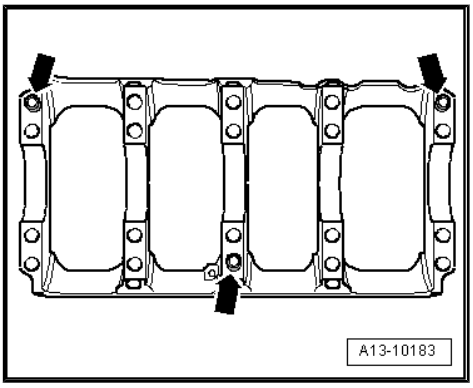

Installing retaining frame

– Renew bolts -1 … 20-.

– Tighten bolts for retaining frame as follows:

1. Tighten bolts to 30 Nm using torque wrench.
2. Tighten bolts to 50 Nm using torque wrench.
3. Turn bolts 90° ($^1/_4$ turn) further using a rigid wrench.

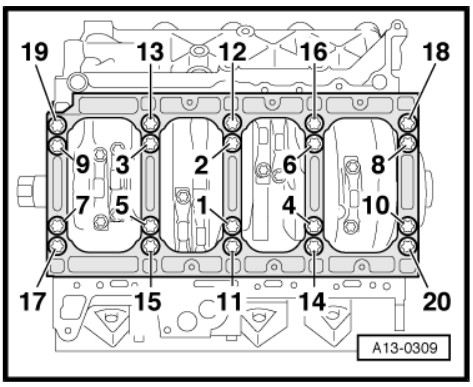

Bearing bush for torque converter

– Make sure bearing bush -arrow- is fitted in crankshaft before installing drive plate. Drive in bearing bush if necessary.

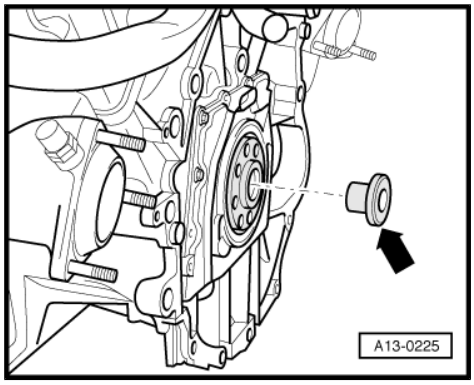

4.2 Allocation of main bearing shells for new crankshafts

Matching crankshaft bearing shells to bearings in cylinder block

- Bearing shells of the correct thickness are matched to the bearings in the cylinder block at the factory. Coloured dots on the side of the bearing shells are used to identify the bearing shell thickness.
- The allocation of the bearing shells to the cylinder block is identified by a code letter next to the relevant bearing.

Letter on cylinder block	Colour coding of bearing
R =	Red
G =	Yellow
B =	Blue

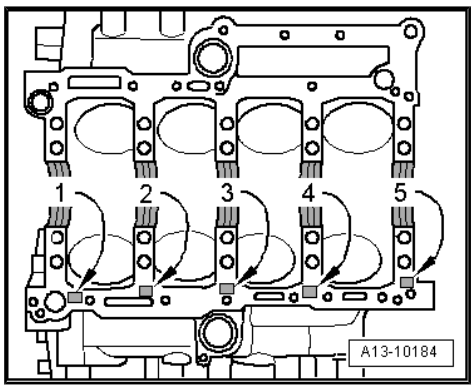

Allocation of crankshaft bearing shells for retaining frame - version I

- Bearing shells of the correct thickness are matched to the bearings in the retaining frame at the factory. Coloured dots on the side of the bearing shells are used to identify the bearing shell thickness.
- The allocation of the bearing shells on the retaining frame is indicated by stamped markings or coloured dots on the crankshaft webs, as shown in illustration.

Crankshaft with			Colour coding of bearing
Stamped marking	Coloured dot		
R	Red	=	Red
G	Yellow	=	Yellow
B	Blue	=	Blue

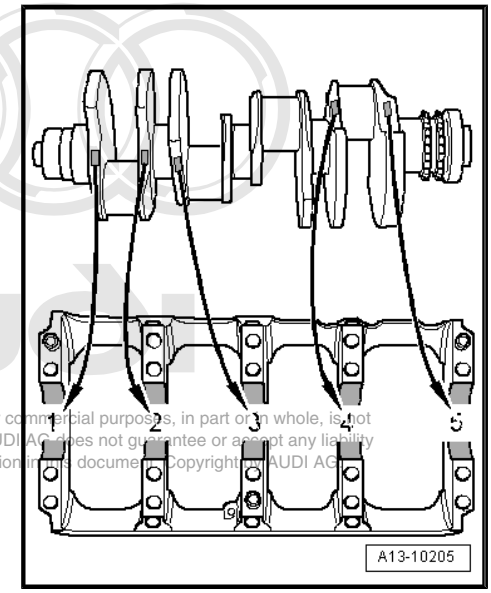

Protected by copyright. Copying for private or commercial purposes, in part or in whole, is not permitted unless authorised by AUDI AG. AUDI AG does not guarantee or accept any liability with respect to the correctness of information in this document. Copyright by AUDI AG.

Allocation of crankshaft bearing shells for retaining frame - version II

- Bearing shells of the correct thickness are matched to the bearings in the retaining frame at the factory. Coloured dots on the side of the bearing shells are used to identify the bearing shell thickness.
- The allocation of the bearing shells to the retaining frame is indicated by letters on the front crankshaft web, as shown in illustration. The “X” indicates the end of the row of letters and is next to the colour coding for bearing 1 (pulley end).

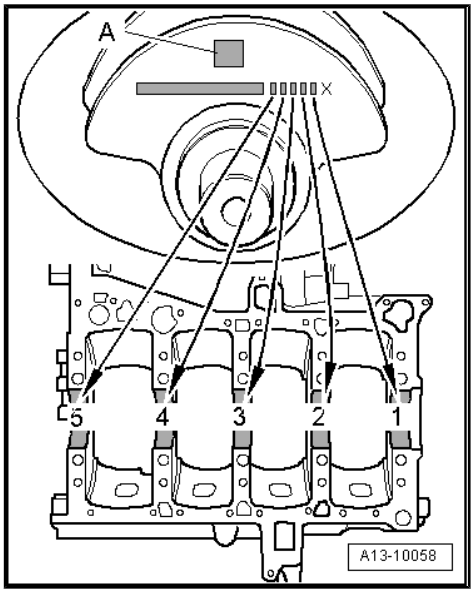

Note

- *The row of letters begins on the left with bearing 5 (flywheel end).*
- *Disregard -item A-.*

Letter on crankshaft	Colour coding of bearing
R =	Red
G =	Yellow
B =	Blue

4.3 Allocation of crankshaft bearing shells for retaining frame without visible colour coding

In some cases the colour coding of the crankshaft bearing shells may no longer be visible. In this case the main bearing journals must be measured to allocate the correct bearing shells.

Main bearing journal ∅	Colour code of bearing shells for retaining frame		
Dimensions (in mm)	**Red**	**Yellow**	**Blue**
Basic dimension 65	64.978 … 64.972	64.972 … 64.965	64.965 … 64.958

Protected by copyright. Copying for private or commercial purposes, in part or in whole, is not permitted unless authorised by AUDI AG. AUDI AG does not guarantee or accept any liability with respect to the correctness of information in this document. Copyright by AUDI AG.

4.4 Crankshaft dimensions

Honing dimension (in mm)	Crankshaft main bearing journal ∅	Crankshaft conrod journal ∅
Basic dimension	65.000 – 0.022 – 0.042	60.000 – 0.020 – 0.040

4.5 Measuring axial clearance

Special tools and workshop equipment required

♦ Universal dial gauge bracket - VW 387-

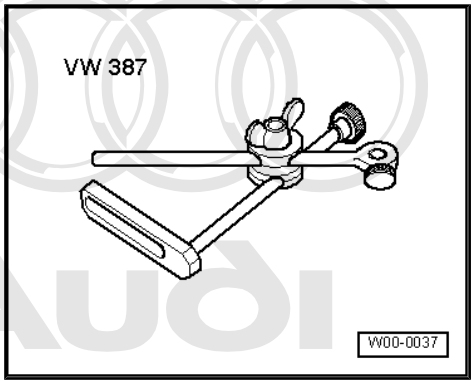

Protected by copyright. Copying for private or commercial purposes, in part or in whole, is not permitted unless authorised by AUDI AG. AUDI AG does not guarantee or accept any liability with respect to the correctness of information in this document. Copyright by AUDI AG.

♦ Dial gauge - VAS 6079-

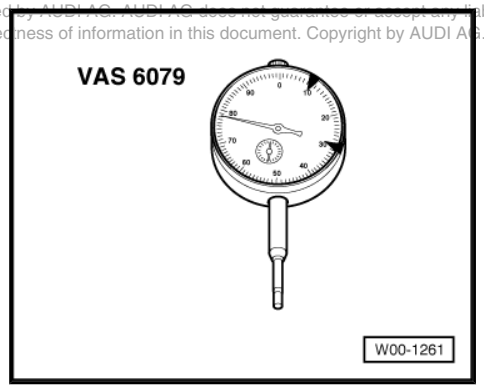

Procedure

– Bolt dial gauge - VAS 6079- with universal dial gauge bracket - VW 387- onto cylinder block and set it against crank web.

– Press crankshaft against dial gauge by hand and set gauge to “0”.

– Push crankshaft away from dial gauge and read off value.

Axial clearance:

- Specification: 0.10 … 0.24 mm.
- Wear limit: 0.28 mm.

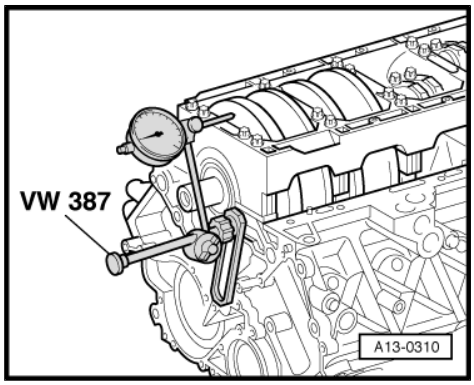

4.6 Measuring radial clearance

Special tools and workshop equipment required

♦ Plastigage

Procedure

Note

Renew used bearing shells.

– Remove retaining frame and clean bearing journals.

– Place Plastigage onto bearing journal or into bearing shells (length of Plastigage should correspond to width of bearing).

- The Plastigage must be positioned in the centre of the bearing shell

– Fit retaining frame and secure with old bolts ⇒ page 93 without rotating crankshaft.

– Remove retaining frame once more.

– Compare width of Plastigage with measurement scale:

Radial clearance:

- New: 0.018 ... 0.045 mm.
- Wear limit: 0.100 mm.

– When carrying out final assembly, renew bolts.

Protected by copyright. Copying for private or commercial purposes, in part or in whole, is not permitted unless authorised by AUDI AG. AUDI AG does not guarantee or accept any liability with respect to the correctness of information in this document. Copyright by AUDI AG.

5 Dismantling and assembling pistons and conrods

⇒ “5.1 Pistons and conrods - exploded view”, page 98
⇒ “5.3 Piston and cylinder dimensions”, page 102
⇒ “5.4 Measuring radial clearance of conrods”, page 102
⇒ “5.5 Allocation of conrod bearing shells”, page 103
⇒ “5.6 Measuring piston projection at TDC”, page 103

Protected by copyright. Copying for private or commercial purposes, in part or in whole, is not permitted unless authorised by AUDI AG. AUDI AG does not guarantee or accept any liability with respect to the correctness of information in this document. Copyright by AUDI AG.

5.1 Pistons and conrods - exploded view

Note

Oil spray jet for piston cooling ⇒ page 99 .

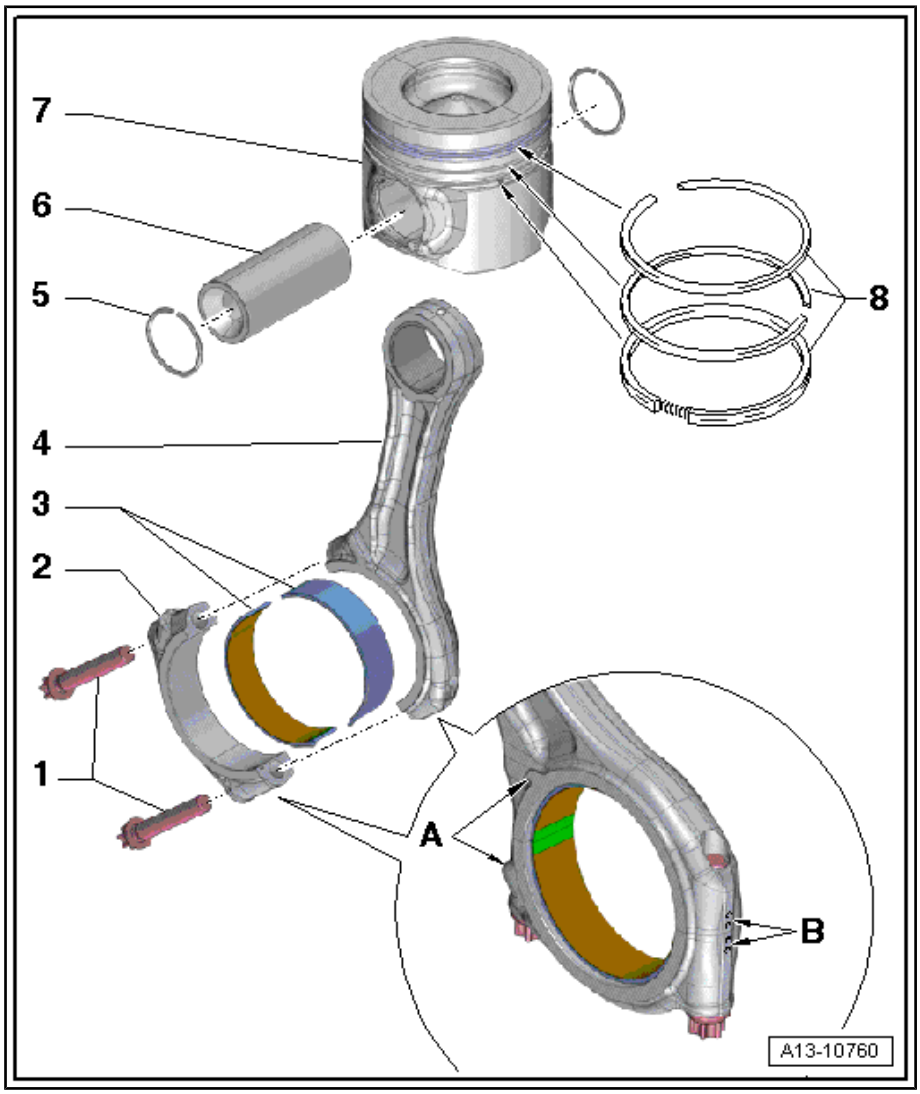

1 - Conrod bolts, 35 Nm + 90° (1/4 turn) further

- ❑ Renew
- ❑ Use old bolts when measuring radial clearance
- ❑ Lubricate threads and contact surface

2 - Conrod bearing cap

- ❑ Do not interchange
- ❑ Mark cylinder allocation in colour -B- ⇒ page 101
- ❑ Installation position: Note position of lugs on casting -A-

3 - Bearing shells

- ❑ Note installation position
- ❑ Renew used bearing shells
- ❑ Install new bearing shells with the correct coloured markings ⇒ page 103
- ❑ Measuring radial clearance ⇒ page 102

4 - Conrod

- ❑ Only renew as a complete set
- ❑ Mark cylinder allocation in colour -B- ⇒ page 101
- ❑ Installation position: Note position of lugs on casting -A-
- ❑ Installation position of conrod pairs ⇒ page 101
- ❑ Axial clearance of one pair of conrods, new: 0.20 ... 0.38 mm; Wear limit: 0.60 mm
- ❑ Measuring radial clearance ⇒ page 102

5 - Circlip

6 - Piston pin

- ❑ If difficult to move, heat piston to approx. 60 °C
- ❑ Remove and install using drift - VW 222 A-

7 - Piston

- ❑ Removing and installing ⇒ page 101
- ❑ Piston installation position and piston/cylinder allocation ⇒ page 100
- ❑ Use chalk or waterproof felt-tip pen to mark cylinder allocation on piston crown.
- ❑ Renew piston if cracking is visible on piston crown or piston skirt
- ❑ Install using piston ring clamp
- ❑ Checking ⇒ page 100
- ❑ Measuring cylinder bore ⇒ page 100
- ❑ Measuring piston projection at TDC ⇒ page 103
- ❑ Piston and cylinder dimensions, piston allocation for cylinder bore ⇒ page 102

8 - Piston rings

- ❑ Offset gaps by 120°
- ❑ Use piston ring pliers to remove and install
- ❑ Marking “TOP” or side with identification mark must face piston crown
- ❑ Measuring ring gap ⇒ page 99
- ❑ Measuring ring-to-groove clearance ⇒ page 100

Oil spray jet for piston cooling

1 - Bolt, 9 Nm; renew (self-locking)

2 - Oil spray jet with spray nozzle valve for piston cooling

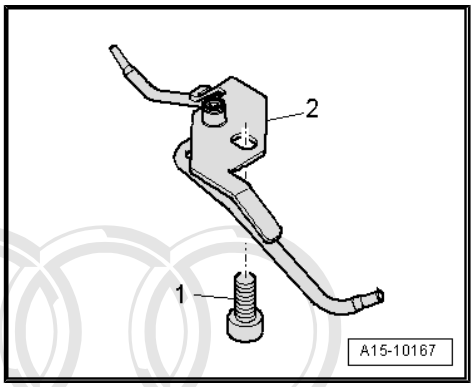

Note

- *Do not bend oil spray jets.*
- *Renew oil spray jets if bent.*

Measuring piston ring gap

– Insert piston ring at right angle to cylinder wall from above and push down into lower cylinder opening approx. 15 mm from bottom of cylinder.

– Use a piston without piston rings to push in the ring.

Piston ring Dimensions in mm	New	Wear limit
1st compression ring	0.28 … 0.41	0.70
2nd compression ring	0.70 … 0.90	1.30
Oil scraper ring	0.25 … 0.50	0.70

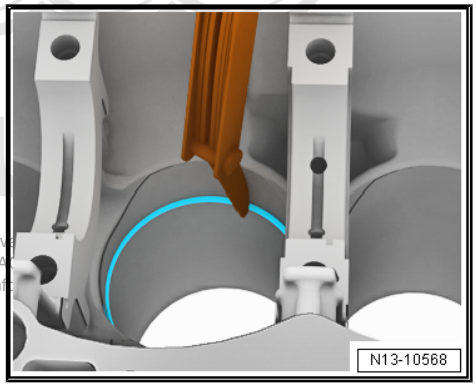

Protected by copyright. Copying for priv
permitted unless authorised by AUDI A
with respect to the correctness of inf

Measuring ring-to-groove clearance

– Clean groove in piston before checking clearance.

Piston ring Dimensions in mm	New	Wear limit
1st compression ring	0.120 … 0.160	0.175
2nd compression ring	0.050 … 0.090	0.115
Oil scraper ring	0.030 … 0.070	0.105

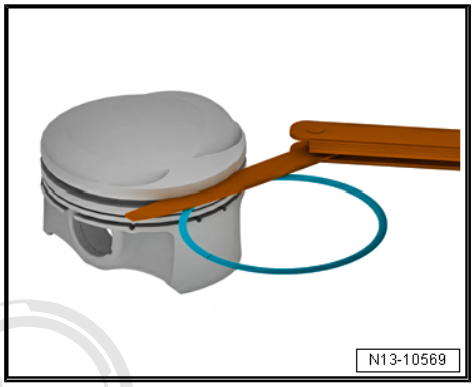

Checking piston

– Using a micrometer (75 ... 100 mm), measure approx. 10 mm from the lower edge, perpendicular to the piston pin axis.

• Maximum deviation from nominal dimension: 0.04 mm.

Nominal dimension
⇒ “5.3 Piston and cylinder dimensions”, page 102 .

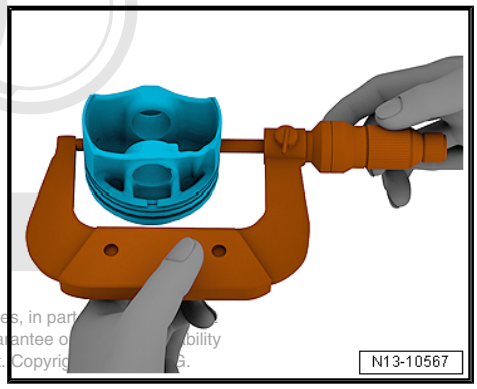

Protected by copyright. Copying for private or commercial purposes, in part permitted unless authorised by AUDI AG. AUDI AG does not guarantee o bility with respect to the correctness of information in this document. Copyrig G.

Measuring cylinder bore

– Use 50 ... 100 mm internal dial gauge to take measurements at 3 points in transverse direction -A- and longitudinal direction -B-.

• Maximum deviation from nominal dimension: 0.08 mm.

Nominal dimension
⇒ “5.3 Piston and cylinder dimensions”, page 102 .

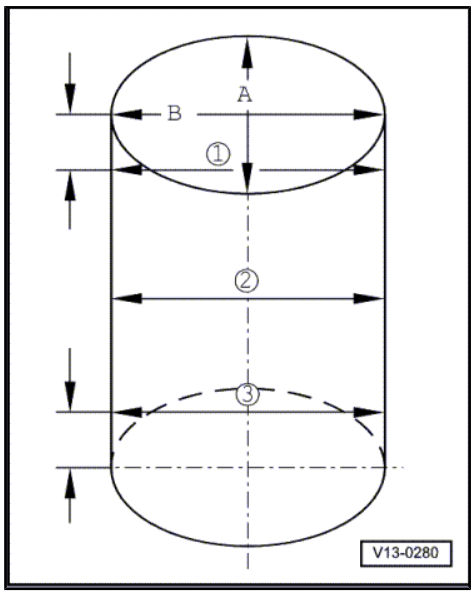

Piston installation position and piston/cylinder allocation

– Use chalk or waterproof felt-tip pen to mark cylinder allocation on piston crown.

Note

Do not use a centre punch or scriber, as this would damage the coating of the piston crown.

Installation position:

• Arrows on piston crowns point to pulley end.

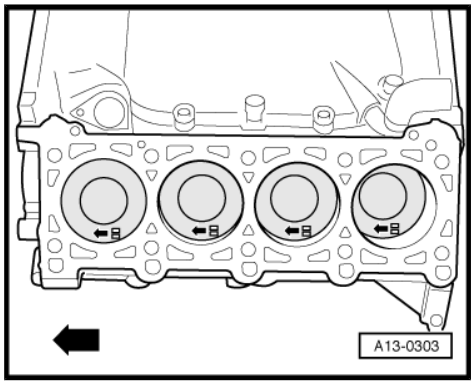

Marking conrods

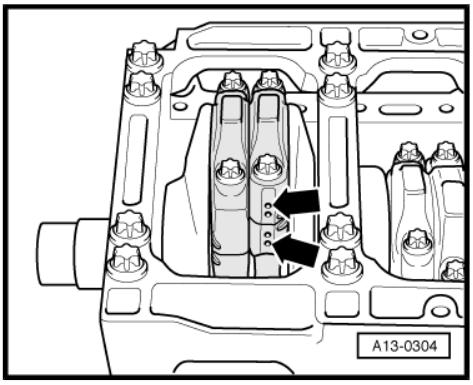

Note

- ♦ *Only renew conrods as a complete set.*
- ♦ *Do not interchange conrod bearings.*

– Prior to removal, use a coloured pen to mark pairing of conrods with conrod bearing caps and cylinder allocation -arrows-.

Conrod installation position

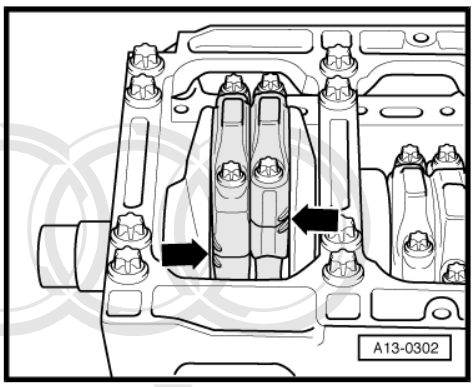

- Lugs on castings -arrows- are located as shown in illustration.

5.2 Removing and installing pistons

Special tools and workshop equipment required

- ♦ Drift - VW 222 A-

Protected by copyright. Copying for private or commercial purposes, in part or in whole, is not permitted unless authorised by AUDI AG. AUDI AG does not guarantee or accept any liability with respect to the correctness of information in this document. Copyright by AUDI AG.

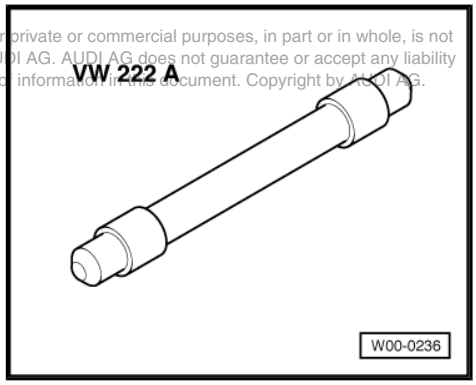

- ♦ Piston ring clamp, commercially available

Removing

- Engine secured to engine and gearbox support - VAS 6095- ⇒ page 38 .

– Remove cylinder head ⇒ page 156 .

– Remove upper section of sump ⇒ page 198 .

– Mark installation position and matching of conrod bearing caps to cylinder and to conrods for reinstallation ⇒ page 101 .

– Unbolt conrod bearing caps.

– Pull out pistons upwards with conrods.

Note

If piston pin is difficult to remove, heat piston to approx. 60 °C.

– Take circlip out of piston pin boss.
– Use drift - VW 222 A- to drive out piston pin.

Installing

Installation is carried out in the reverse order; note the following:

- Tightening torques ⇒ page 98

Note

Renew the bolts tightened with specified tightening angle.

– Oil running surfaces of bearing shells.
– Install pistons using commercially available piston ring clamp.

Installation position:

- Pistons ⇒ page 100
- Conrods ⇒ page 101

– Install conrod bearing caps according to markings.
– Install sump (upper section) ⇒ page 198 .
– Install cylinder head ⇒ page 156 .

5.3 Piston and cylinder dimensions

Dimensions	Piston ∅ mm [1]	Cylinder bore ∅ mm
Basic dimension	82.950 ± 0.009	83.006 … 83.014
Intermediate size	82.990 ± 0.009	83.046 … 83.054

- [1] Dimensions not including coating (thickness 0.02 mm). Coating on piston skirt will wear down in service.

Protected by copyright. Copying for private or commercial purposes, in part or in whole, is not permitted unless authorised by AUDI AG. AUDI AG does not guarantee or accept any liability with respect to the correctness of information in this document. Copyright by AUDI AG.

5.4 Measuring radial clearance of conrods

Special tools and workshop equipment required

♦ Plastigage

Procedure

– Remove conrod bearing caps.
– Clean bearing caps and bearing journals.
– Place Plastigage onto bearing journal or into bearing shells corresponding to width of bearing.
– Fit conrod bearing caps and secure with old bolts ⇒ Item 1 (page 98) without rotating crankshaft.
– Remove conrod bearing caps once more.
– Compare width of Plastigage with measurement scale:

Radial clearance:

- New: 0.015 ... 0.062 mm.
- Wear limit: 0.120 mm.

– When carrying out final assembly, renew bolts.

5.5 Allocation of conrod bearing shells

New conrod bearing shells are colour coded and may only be fitted as a pair as follows:

Type of pair	I	II	III
Bearing shell for conrod	Yellow	Blue	Red
Bearing shell for conrod bearing cap	Yellow	Red	Blue

5.6 Measuring piston projection at TDC

Note

- *Piston projection at TDC must be measured when installing new pistons or a short engine. Depending upon piston projection, install the corresponding cylinder head gasket according to the table below:*
- *If the measured values for piston projection are not the same for all pistons, use the highest value to determine the correct gasket size.*
- *The cylinder head gasket must be determined separately for each cylinder bank.*

Protected by copyright. Copying for private or commercial purposes, in part or in whole, is not permitted unless authorised by AUDI AG. AUDI AG does not guarantee or accept any liability with respect to the correctness of information in this document. Copyright by AUDI AG.

Special tools and workshop equipment required

- Measuring bridge - VW 382/7- from measuring tool - VW 382-
- Measuring plate - VW 385/17- from universal measuring tool - VW 385-
- Dial gauge - VAS 6079-

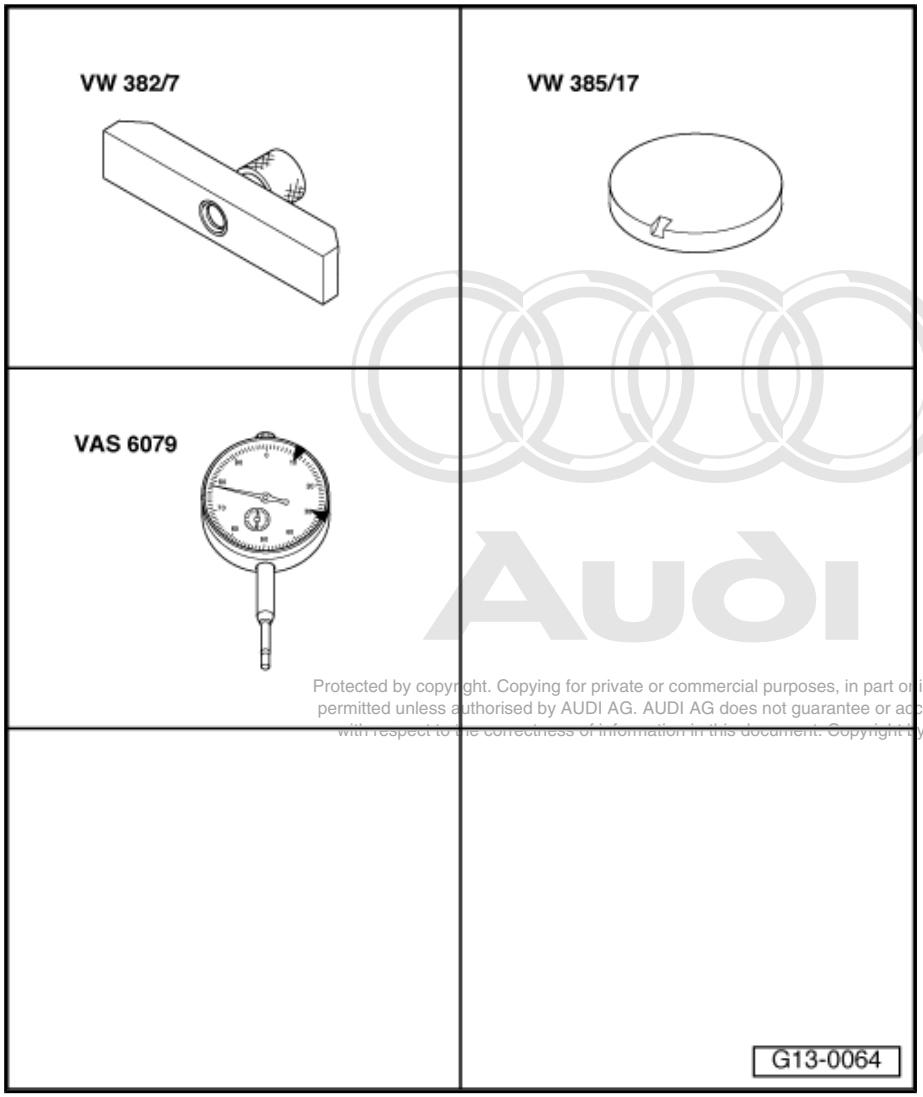

Protected by copyright. Copying for private or commercial purposes, in part or in whole, is not permitted unless authorised by AUDI AG. AUDI AG does not guarantee or accept any liability with respect to the correctness of information in this document. Copyright by AUDI AG.

Procedure

– Set up dial gauge - VAS 6079- with measuring bridge - VW 382/7- and measuring plate -VW 385/17- .

– Measure projection at each piston at both locations marked with -arrows- (seen in longitudinal direction of engine: at front and rear of piston).

Piston projection above top surface of cylinder block	Identification (No. of holes)
0.39 … 0.49 mm	1
0.49 … 0.54 mm	2
0.54 … 0.65 mm	3

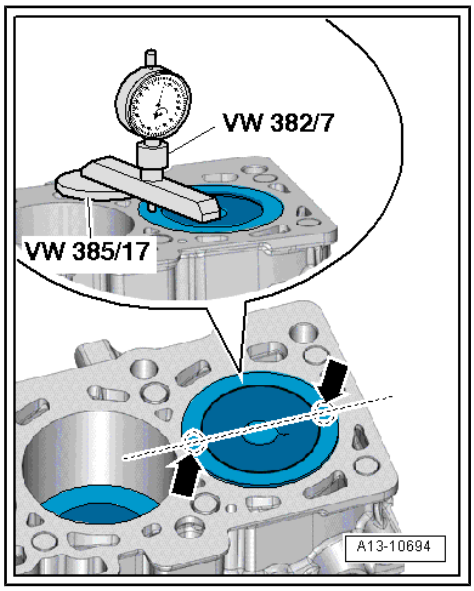

Identification of cylinder head gasket

1 - Holes

2 - Part No.

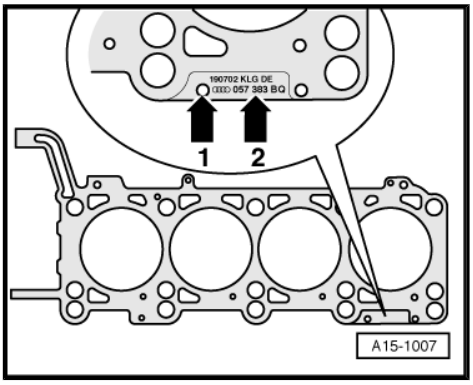

Note

The gaskets for the left and right cylinder heads have different shapes and cannot be interchanged.

Protected by copyright. Copying for private or commercial purposes, in part or in whole, is not permitted unless authorised by AUDI AG. AUDI AG does not guarantee or accept any liability with respect to the correctness of information in this document. Copyright by AUDI AG.

15 – Cylinder head, valve gear

1 Chain drive

⇒ “1.1 Timing chain covers - exploded view”, page 106

⇒ “1.2 Removing and installing timing chain covers”, page 108

⇒ “1.3 Camshaft timing chains - exploded view”, page 116

⇒ “1.4 Detaching camshaft timing chains from camshafts”, page 118

⇒ “1.5 Removing and installing camshaft timing chains”, page 129

⇒ “1.6 Drive chain for valve gear - exploded view”, page 138

⇒ “1.7 Removing and installing drive chain for valve gear”, page 140

⇒ “1.8 Chain for auxiliary drives - exploded view”, page 141

⇒ “1.9 Removing and installing chain for auxiliary drives”, page 142

⇒ “1.10 Auxiliary drives - exploded view”, page 144

⇒ “1.11 Renewing oil seal for power steering pump drive”, page 145

⇒ “1.12 Removing and installing spur gear drive”, page 148

Protected by copyright. Copying for private or commercial purposes, in part or in whole, is not permitted unless authorised by AUDI AG. AUDI AG does not guarantee or accept any liability with respect to the correctness of information in this document. Copyright by AUDI AG.

1.1 Timing chain covers - exploded view

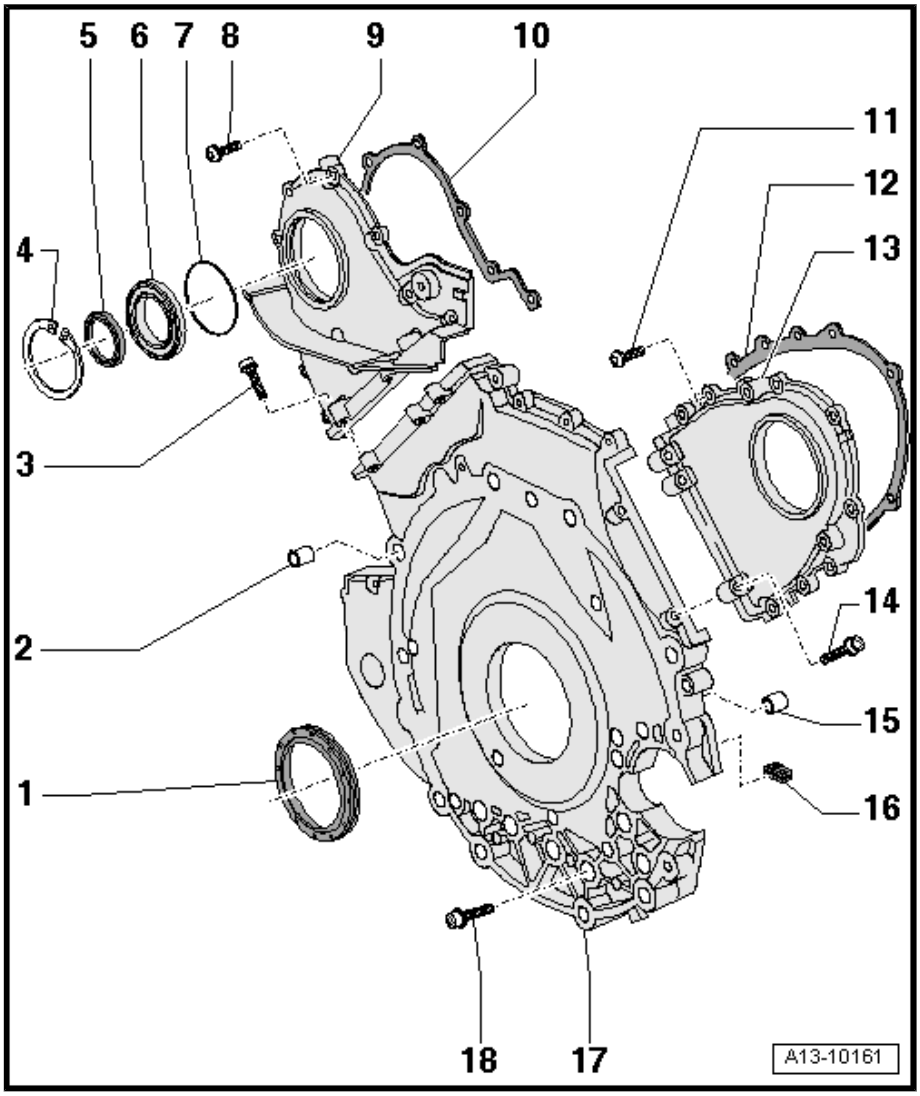

1 - Seal
- ❑ For crankshaft (timing chain end)
- ❑ Removing and installing ⇒ page 72

2 - Dowel sleeve
- ❑ 2x

3 - 8 Nm + 90° (1/4 turn) further
- ❑ Renew
- ❑ Note correct sequence when tightening ⇒ page 115

4 - Circlip

5 - Seal
- ❑ For toothed belt drive sprocket
- ❑ Renewing ⇒ page 74

6 - Adapter
- ❑ For oil seal

7 - O-ring
- ❑ Renew

8 - 8 Nm + 90° (1/4 turn) further
- ❑ Renew
- ❑ Note correct sequence when tightening ⇒ page 115

9 - Timing chain cover (left-side)

10 - Gasket
- ❑ Up to 03.2007
- ❑ Renew
- ❑ Gasket replaced by sealant from 03.2007 onwards
- ❑ Allocation ⇒ Electronic parts catalogue

11 - 8 Nm + 90° (1/4 turn) further
- ❑ Renew
- ❑ Note correct sequence when tightening ⇒ page 116

12 - Gasket
- ❑ Up to 03.2007
- ❑ Renew
- ❑ Gasket replaced by sealant from 03.2007 onwards
- ❑ Allocation ⇒ Electronic parts catalogue

13 - Timing chain cover (right-side)

14 - 8 Nm + 90° (1/4 turn) further
- ❑ Renew
- ❑ Note correct sequence when tightening ⇒ page 116

Protected by copyright. Copying for private or commercial purposes, in part or in whole, is not permitted unless authorised by AUDI AG. AUDI AG does not guarantee or accept any liability with respect to the correctness of information in this document. Copyright by AUDI AG.

15 - Dowel sleeve
- ❑ 2x

16 - Sealing plug

- ❑ 2x

17 - Timing chain cover (bottom)

18 - M6 = 9 Nm; M8 = 22 Nm

- ❑ Note correct sequence when tightening ⇒ page 114

1.2 Removing and installing timing chain covers

Special tools and workshop equipment required

- ♦ Counterhold tool - 10 - 201-
- ♦ Used oil collection and extraction unit - V.A.G 1782- or -VAS 6622A-
- ♦ Counterhold tool - T10172- with -T10172/2-
- ♦ Electric drill with plastic brush attachment
- ♦ Safety goggles
- ♦ Sealant ⇒ Electronic parts catalogue

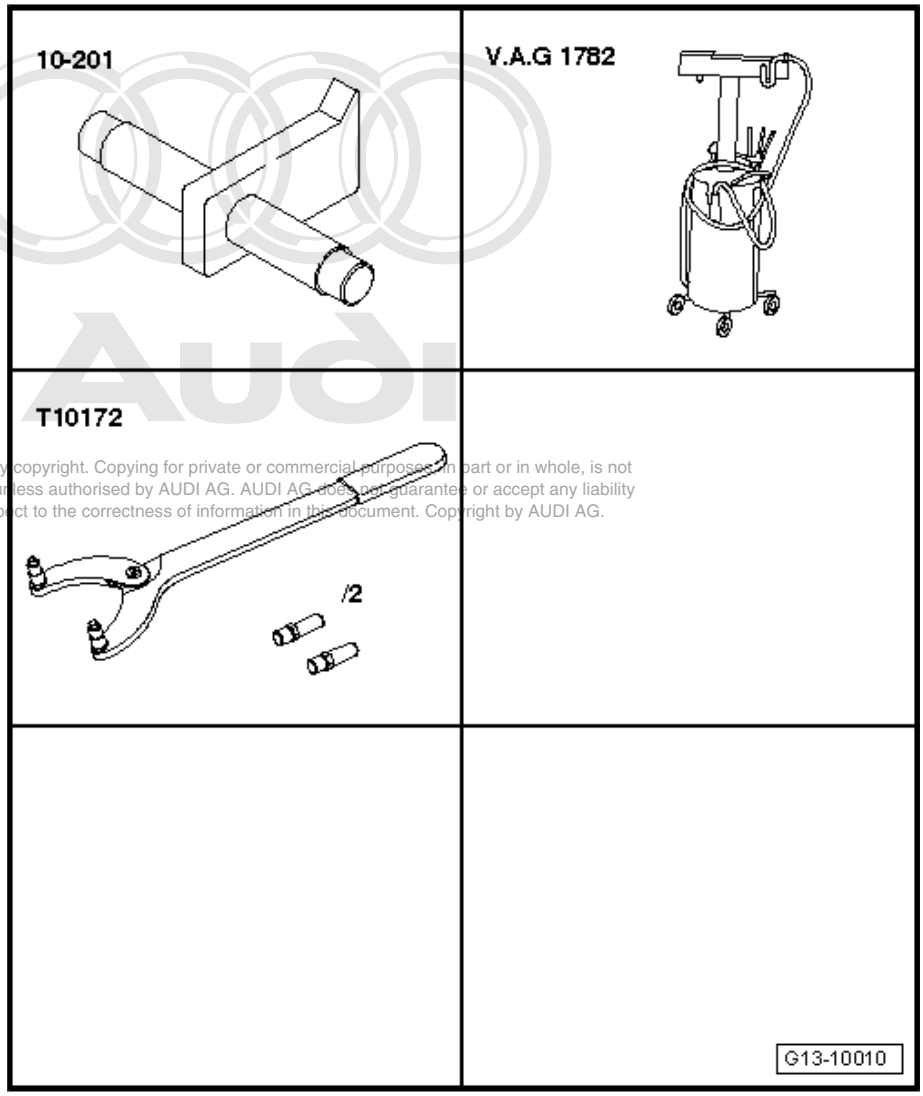

Protected by copyright. Copying for private or commercial purposes, in part or in whole, is not permitted unless authorised by AUDI AG. AUDI AG does not guarantee or accept any liability with respect to the correctness of information in this document. Copyright by AUDI AG.

Removing

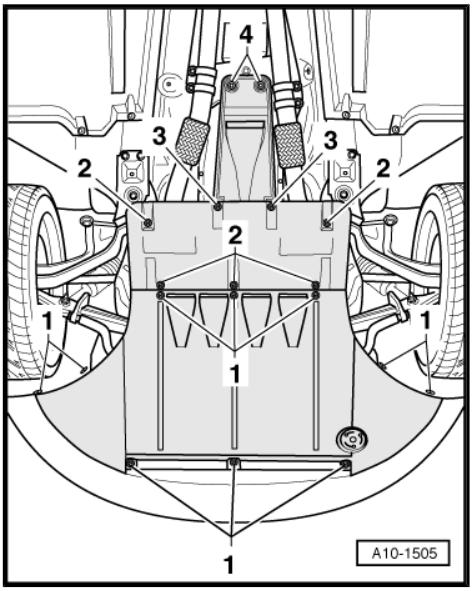

Note

All cable ties which are released or cut open when removing must be fitted in the same position when installing.

- Release quick-release fasteners -1-, -3- and -4- and take off noise insulation panels.
- Position used oil collection and extraction unit below engine.
- Drain off engine oil.
- Remove engine ⇒ page 8 .
- Separate engine from gearbox ⇒ page 31 .
- Secure engine to engine stand ⇒ page 38 , or leave engine on scissor-type assembly platform - VAS 6131 A- .

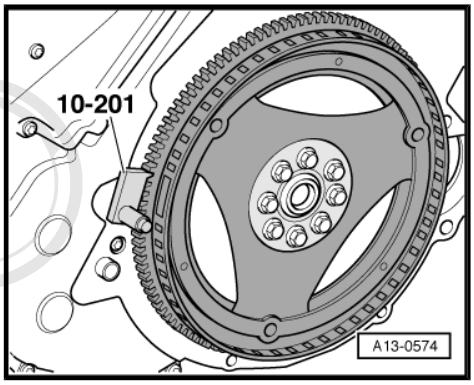

- Attach counterhold tool - 10 - 201- in order to loosen bolts.
- Unbolt drive plate.

Protected by copyright. Copying for private or commercial purposes, in part or in whole, is not permitted unless authorised by AUDI AG. AUDI AG does not guarantee or accept any liability with respect to the correctness of information in this document. Copyright by AUDI AG.

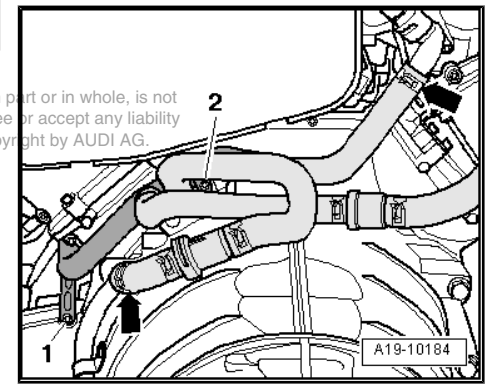

- Detach coolant hoses at the connections indicated -arrows-.
- Remove bolts -1- and -2-.
- Detach coolant pipe (rear) from coolant pipe (left-side).

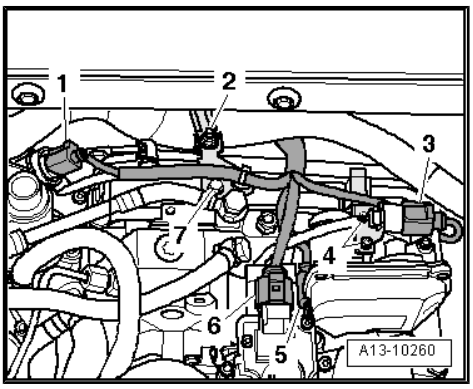

- Unplug electrical connectors -1-, -3-, -5- and -6-.
- Unscrew nut -2- and remove retaining clip for wiring harness.

Note

Disregard items -4- and -7-.

– Release retaining pegs -arrows- and detach toothed belt cover.
– Pivot toothed belt cover to the rear and disengage lugs on bottom side of toothed belt cover.

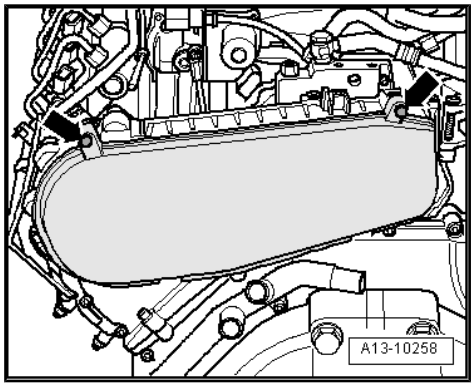

– Remove bolts -1- and -2-.
– Release clamp -arrow- and detach toothed belt cover (top section).

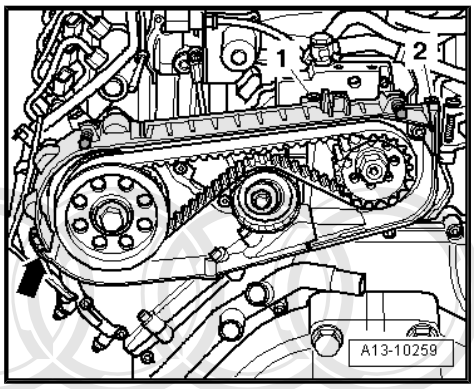

Note

Radio release tool - T10057- or another suitable tool can also be used to release clamp.

– Unscrew bolt -arrow- for tensioning roller.
– Take off tensioning roller and toothed belt for high-pressure pump.

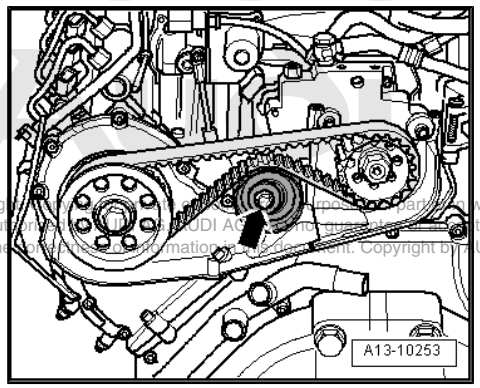

Protected by copyright. Copying or distribution of this document, or any part thereof, is not permitted unless authorized by AUDI AG. AUDI AG does not guarantee or assume any liability with respect to the correctness of information in this document. Copyright by AUDI AG.

– Use counterhold tool - T10172- with -T10172/2- to loosen bolt for toothed belt drive sprocket.
– Remove bolt and take off toothed belt drive sprocket.

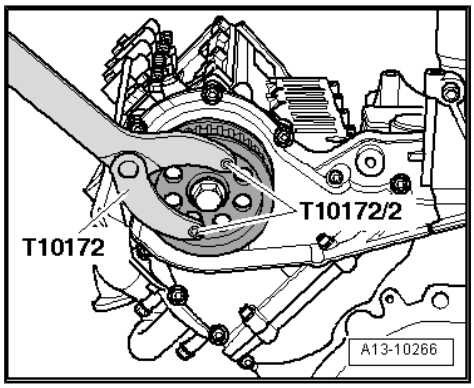

– Remove bolts -2- and -3-.
– Remove vacuum pump.

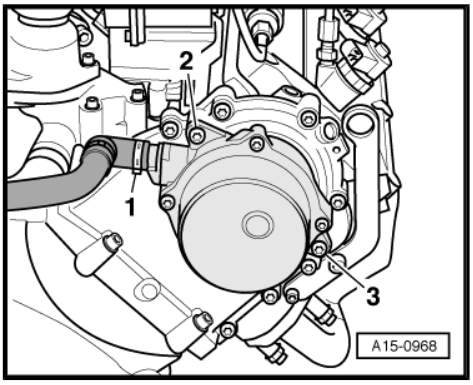

Note

Disregard -item 1-.

– Remove electrical connector for exhaust gas temperature sender 1 - G235- from bracket.
– Remove bolts -1 ... 4- and detach timing chain cover (right-side).

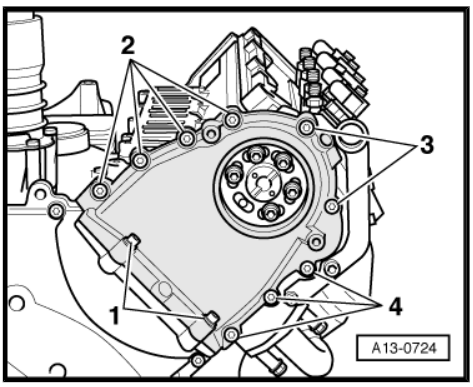

– Remove bolts -1 ... 4- and detach timing chain cover (left-side).

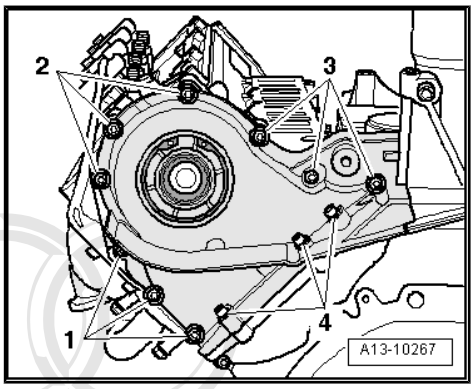

– Remove circlip -2-.
– Pull out adapter -1- for oil seal.
– Press oil seal out of adapter.
– Loosen bolted connections for turbocharger (left-side) ⇒ page 252 .

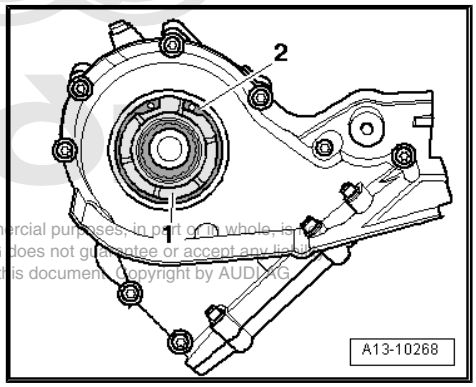

Protected by copyright. Copying for private or commercial purposes, in part or in whole, is not permitted unless authorised by AUDI AG. AUDI AG does not guarantee or accept any liability with respect to the correctness of information in this document. Copyright by AUDI AG.

– Remove bolts -1 … 8- and remove timing chain cover (bottom).

– Press out crankshaft oil seal (rear) from timing chain cover.

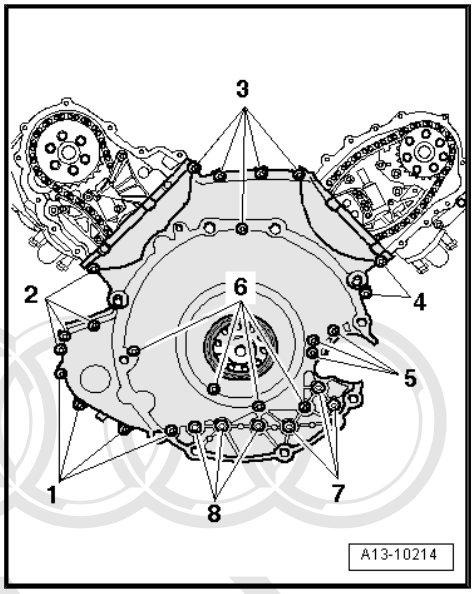

Installing

Note

- *Renew gaskets, seals and O-rings.*
- *Secure all hose connections with the correct type of hose clips (same as original equipment) ⇒ Electronic parts catalogue .*
- *Fit all cable ties in the original positions when installing.*

– Remove old sealant from grooves in timing chain covers and from sealing surfaces.

WARNING

Wear safety goggles.

– Clean old sealant from grooves -arrow- in cylinder head gaskets.

Protected by copyright. Copying fo le, is not permitted unless authorised by AU ny liability with respect to the correctness AG.

Note

With the cylinder head installed the grooves in the cylinder head gasket are only half visible.

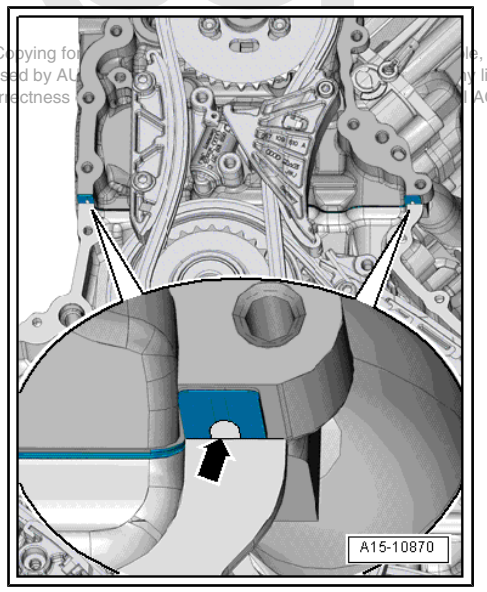

– Remove remaining sealant on timing chain covers -1- and cylinder block / cylinder head using rotating plastic brush or similar.

– Clean sealing surfaces; they must be free of oil and grease.

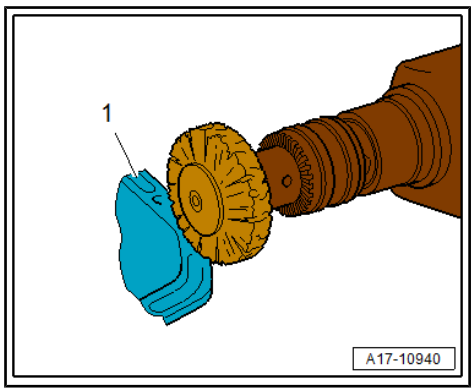

Note

Note the use-by date of the sealant.

– Cut off tube nozzle at front marking (diameter of nozzle approx. 1.5 mm).

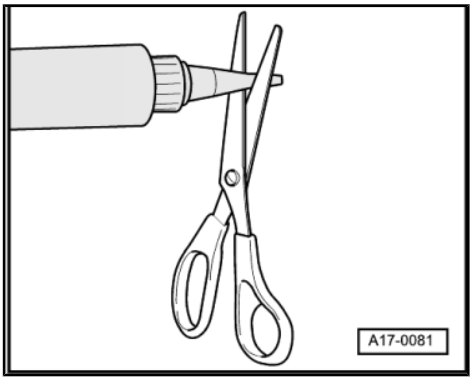

– Fill grooves -arrow- in cylinder head gaskets with sealant (grooves already cleaned).

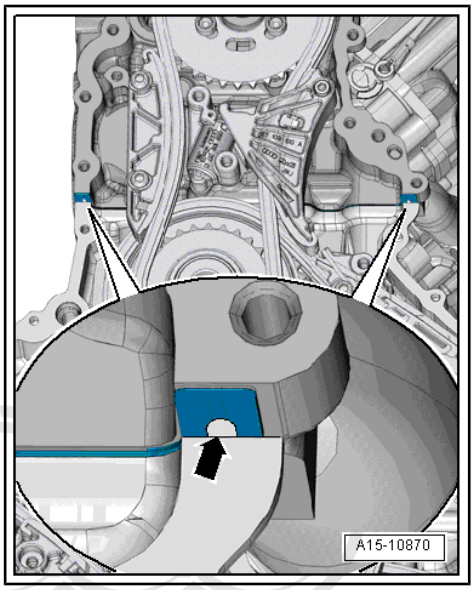

Note

- *The sealant beads must not be thicker than specified, otherwise excess sealant could enter the sump and clog the strainer in the oil pump.*
- *The timing chain covers must be installed within 5 minutes after applying sealant.*

This document is not for selling or trading for private or commercial purposes, in part or in whole, is not permitted unless authorised by AUDI AG. AUDI AG does not guarantee or accept any liability with respect to the correctness of information in this document. Copyright by AUDI AG.

– Insert sealing elements -2- and -5-

– Apply beads of sealant onto clean sealing surfaces of timing chain cover (bottom) as illustrated.

- The grooves on the sealing surfaces -1- and -4- and around drillings -3- and -6- must be completely filled with sealant.
- The beads of sealant must project 1.5 … 2.0 mm above the sealing surface.
- Apply bead of sealant onto sealing elements as well.

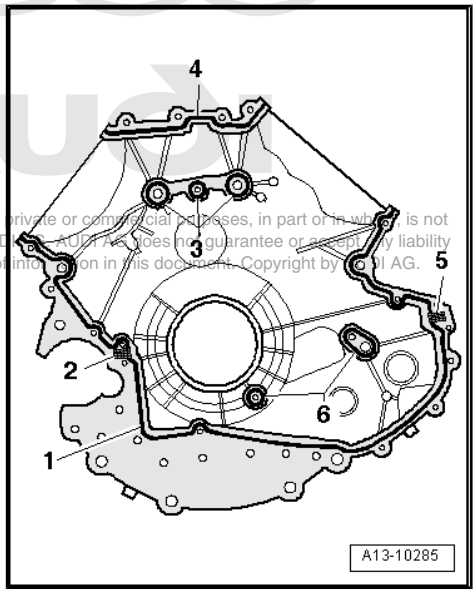

– Check whether the two dowel sleeves are fitted in the cylinder block; install if necessary.

– Fit timing chain cover (bottom) and tighten bolts as follows:

1. Tighten bolts -1 … 8- to 5 Nm in diagonal sequence starting from inside and working outwards.
2. Tighten bolts -1 … 6- to 9 Nm in diagonal sequence starting from inside and working outwards.
3. Tighten bolts -7- and -8- to 22 Nm.

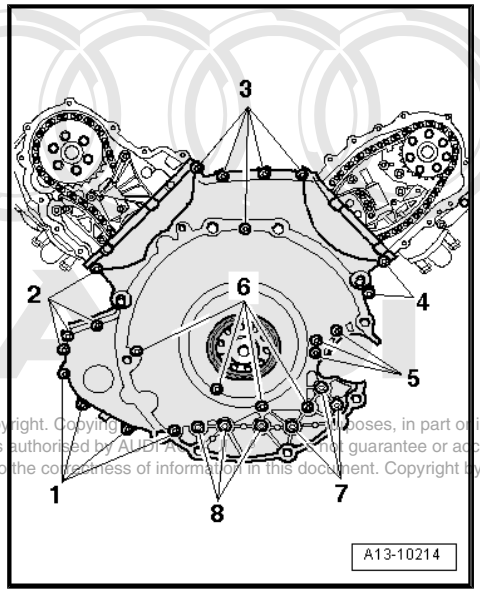

Protected by copyright. Copying for commercial purposes, in part or in whole, is not permitted unless authorised by AUDI AG. AUDI AG does not guarantee or accept any liability with respect to the correctness of information in this document. Copyright by AUDI AG.

– Apply sealant at joints between cylinder head and timing chain cover (bottom) -arrow-, as shown in illustration.

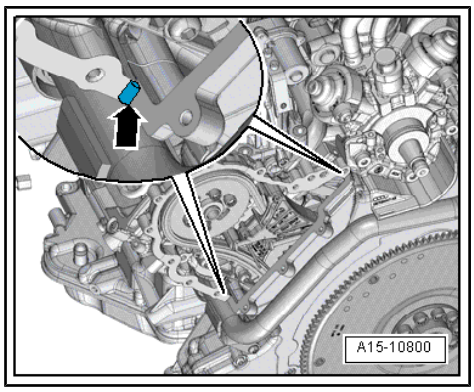

Vehicles up to 03.2007:

– Apply bead of sealant onto clean sealing surface of timing chain cover (left-side) as illustrated.

- The groove -1- on the sealing surface must be completely filled with sealant.
- The bead of sealant must project 1.5 … 2.0 mm above the sealing surface.

– Fit gasket -2-.

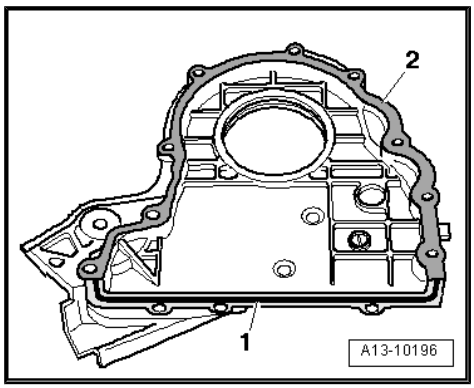

Vehicles from 03.2007 onwards:

– Apply bead of sealant onto clean sealing surface of timing chain cover (left-side) as illustrated.

- The groove -arrow- on the sealing surface must be completely filled with sealant.
- The bead of sealant must project 1.5 … 2.0 mm above the sealing surface.

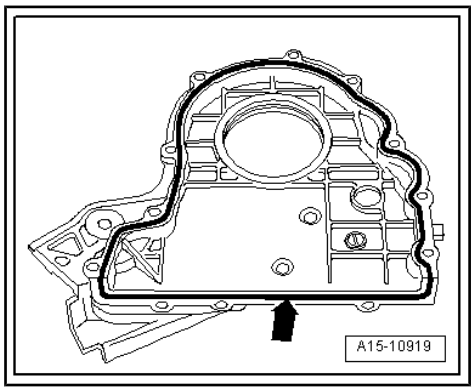

All vehicles (continued):

– Fit timing chain cover (left-side) and tighten bolts as follows:

1. Pre-tighten bolts -1 ... 3- in diagonal sequence to 5 Nm using torque wrench.
2. Tighten bolts -4- to 8 Nm using torque wrench.
3. Tighten bolts -1 ... 3- in diagonal sequence to 8 Nm using torque wrench.
4. Turn bolts -4- 90° further ($^1/_4$ turn) using a rigid wrench.
5. Turn bolts -1 ... 3- 90° further ($^1/_4$ turn) in diagonal sequence using a rigid wrench.

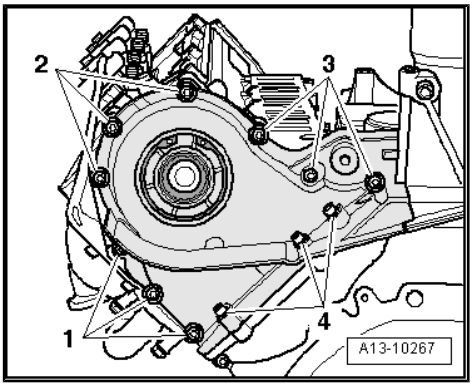

– Apply sealant at joints between cylinder head and timing chain cover (bottom) -arrow-, as shown in illustration.

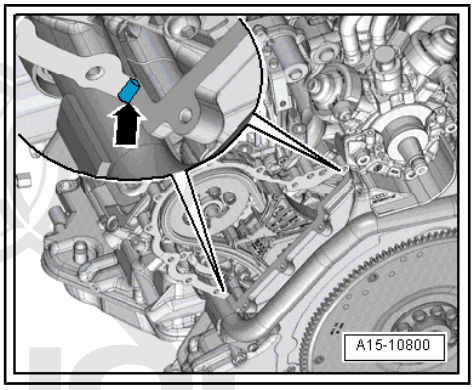

Vehicles up to 03.2007:

– Apply bead of sealant onto clean sealing surfaces of timing chain cover (right-side) as illustrated.

- The groove -1- on the sealing surface must be completely filled with sealant.
- The bead of sealant must project 1.5 … 2.0 mm above the sealing surface.

– Fit gasket -2-.

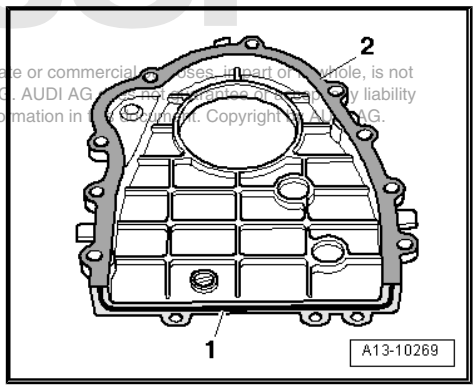

Vehicles from 03.2007 onwards:

– Apply bead of sealant onto clean sealing surfaces of timing chain cover (right-side) as illustrated.

- The groove -arrow- on the sealing surface must be completely filled with sealant.
- The bead of sealant must project 1.5 … 2.0 mm above the sealing surface.

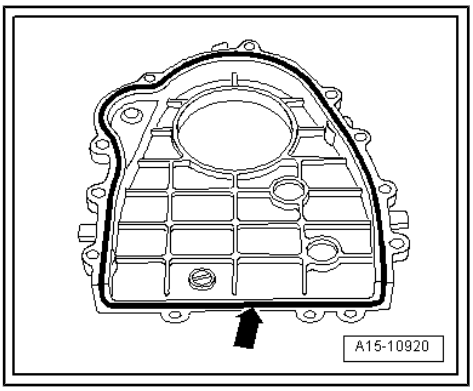

Reproduction or copying, including for private or commercial purposes, in part or in whole, is not permitted unless authorised by AUDI AG. AUDI AG does not guarantee or assume any liability with respect to the correctness of information in this document. Copyright by AUDI AG.

All vehicles (continued):

– Fit timing chain cover (right-side) and tighten bolts as follows:

1. Pre-tighten bolts -2 ... 4- in diagonal sequence to 5 Nm using torque wrench.
2. Tighten bolts -1- to 8 Nm using torque wrench.
3. Tighten bolts -2 ... 4- in diagonal sequence to 8 Nm using torque wrench.
4. Turn bolts -1- 90° further ($^1/_4$ turn) using a rigid wrench.
5. Turn bolts -2 ... 4- 90° further ($^1/_4$ turn) in diagonal sequence using a rigid wrench.

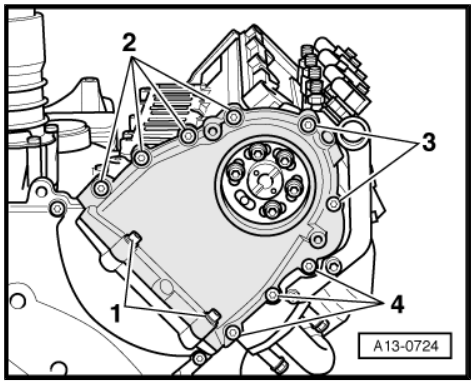

Remaining installation steps are carried out in reverse sequence; note the following:

– Secure turbocharger (left-side) ⇒ page 252 .
– Install vacuum pump ⇒ page 88 .
– Renew oil seal for toothed belt drive sprocket ⇒ page 74 .
– Fit adapter for oil seal with new O-ring ⇒ page 74 .
– Install toothed belt for high-pressure pump ⇒ Rep. gr. 23 .
– Install coolant pipe (rear) ⇒ page 237 .
– Install crankshaft oil seal (timing chain end) ⇒ page 72 .
– Install drive plate ⇒ page 71 .
– Bolt gearbox to engine and install engine/gearbox assembly ⇒ page 40 .
– Fill up with engine oil and check engine oil level ⇒ Maintenance ; Booklet 404 .

Tightening torques

Component		Nm
Timing chain cover (bottom) to engine	M6	9
	M8	22
Timing chain covers (left and right) to engine		8 + 90° 1)2)

- 1) Renew bolts.
- 2) 90° = one quarter turn.

Protected by copyright. Copying for private or commercial purposes, in part or in whole, is not permitted unless authorised by AUDI AG. AUDI AG does not guarantee or accept any liability with respect to the correctness of information in this document. Copyright by AUDI AG.

1.3 Camshaft timing chains - exploded view

Camshaft timing chain (left-side)

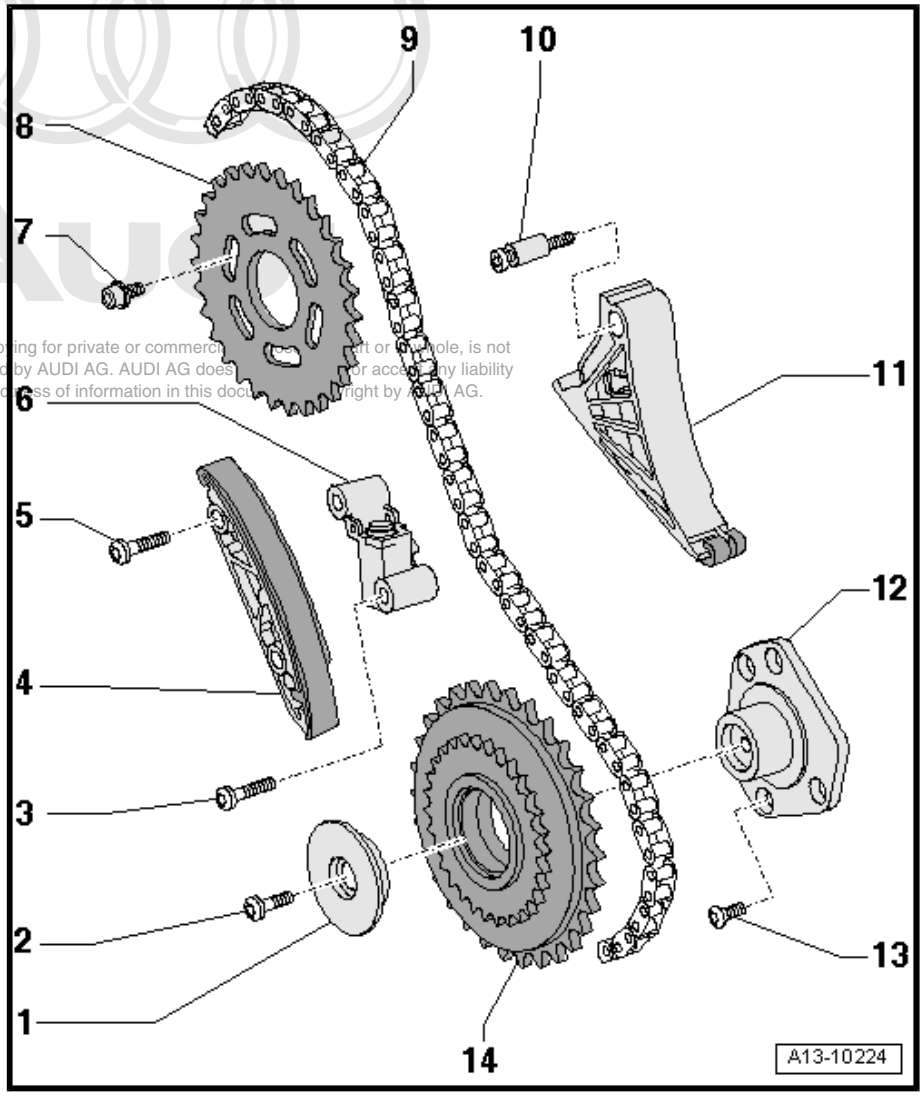

Protected by copyright. Copying for private or commercial purposes, in part or in whole, is not permitted unless authorised by AUDI AG. AUDI AG does not guarantee or accept any liability with respect to the correctness of information in this document. Copyright by AUDI AG.

1 - Thrust washer
- ❑ For drive chain sprocket

2 - 5 Nm + 90° (1/4 turn) further
- ❑ Renew

3 - 5 Nm + 90° (1/4 turn) further
- ❑ Renew

4 - Guide rail
- ❑ Note installation position

5 - 5 Nm + 90° (1/4 turn) further
- ❑ Renew

6 - Chain tensioner
- ❑ For timing chain (left-side)

7 - 24 Nm

8 - Chain sprocket
- ❑ For inlet camshaft
- ❑ Installation position: Side with lettering faces front

9 - Timing chain (left-side)
- ❑ Before removing, mark running direction with paint

10 - Bolt with sleeve: 5 Nm + 90° (1/4 turn) further
- ❑ Renew

11 - Tensioning rail

12 - Bearing bracket
- ❑ For drive chain sprocket

13 - 5 Nm + 90° (1/4 turn) further
- ❑ Renew

14 - Drive chain sprocket
- ❑ For timing chain (left-side)

Camshaft timing chain (right-side)

1 - 45 Nm

2 - Bearing mounting
- ❑ For drive chain sprocket

3 - Timing chain (right-side)
- ❑ Before removing, mark running direction with paint

4 - Chain sprocket
- ❑ For inlet camshaft
- ❑ Installation position: Side with lettering faces front

5 - 24 Nm

6 - Chain tensioner
- ❑ For timing chain (right-side)

7 - 5 Nm + 90° (1/4 turn) further
- ❑ Renew

8 - Thrust washer
- ❑ For drive chain sprocket

9 - Drive chain sprocket
- ❑ For timing chain (right-side)

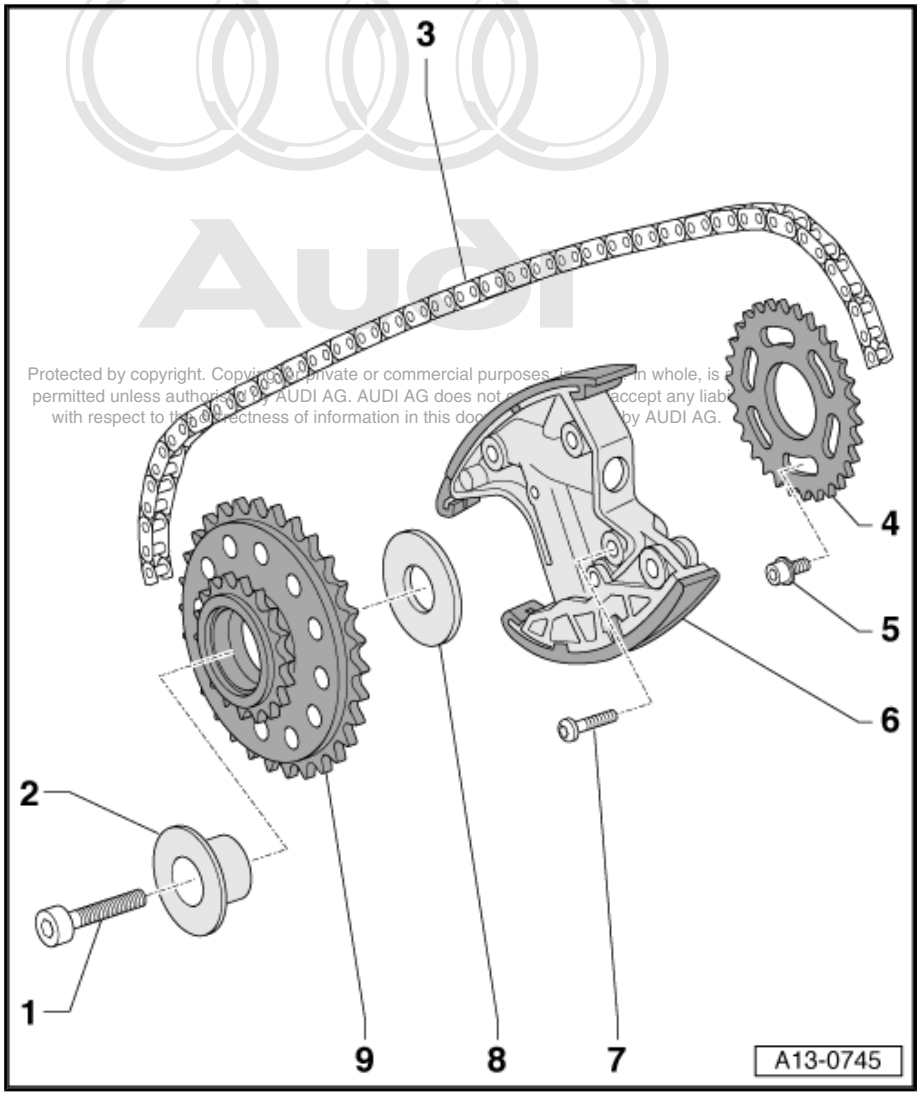

Protected by copyright. Copying for private or commercial purposes, in whole or in part, is not permitted unless authorised by AUDI AG. AUDI AG does not guarantee or accept any liability with respect to the correctness of information in this document. Copyright by AUDI AG.

1.4 Detaching camshaft timing chains from camshafts

Note

- *To remove the cylinder head, it is sufficient to remove the timing chains from the camshafts only. The timing chains remain on engine; the engine/gearbox assembly is not separated.*
- *You must adhere to the described procedures even if you are only working on one of the cylinder heads, since the timing adjustment must be performed for both cylinder heads when work is completed.*

Special tools and workshop equipment required

- Locking pin - 3242-
- Counterhold tool - T10172- with -T10172/2-
- Adapter - T40058-
- 2x Adjustment pin - T40060-
- Adapter - T40061-
- Adapter - T40062-

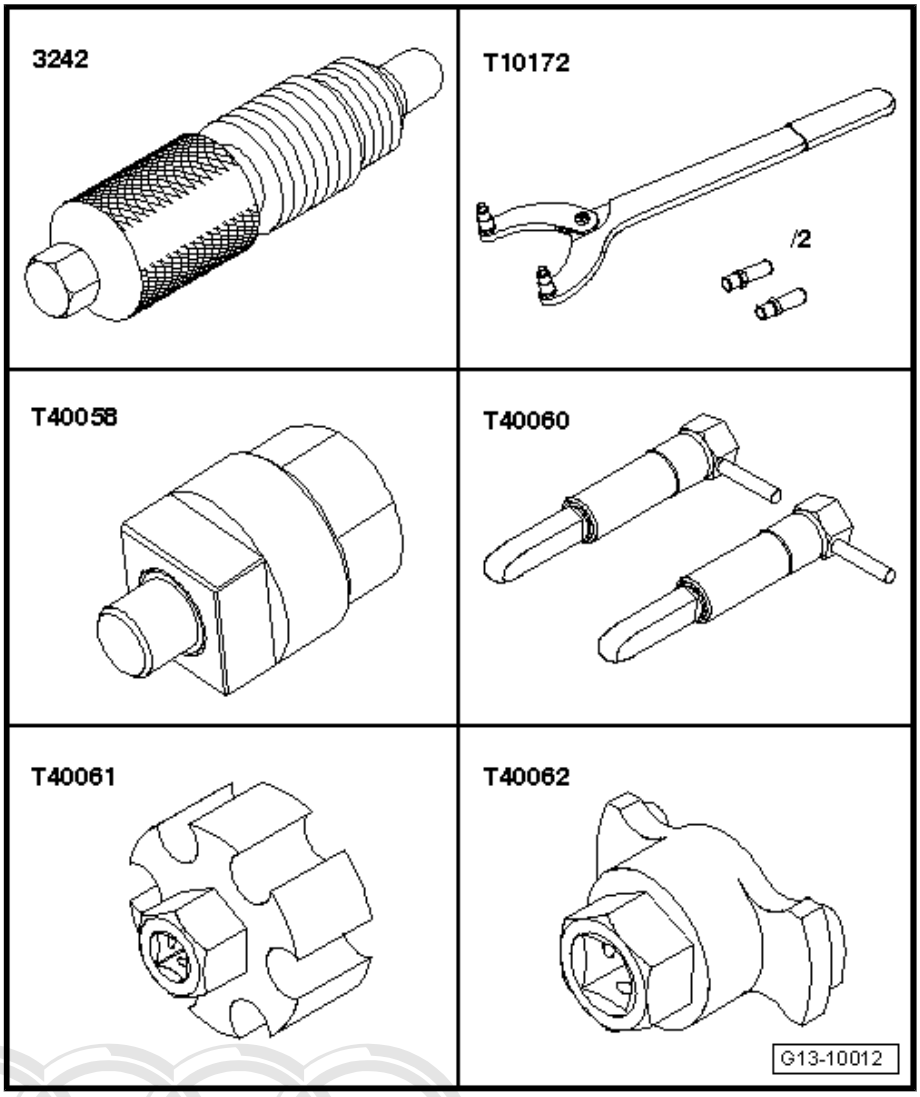

- Locking pin - T40071-

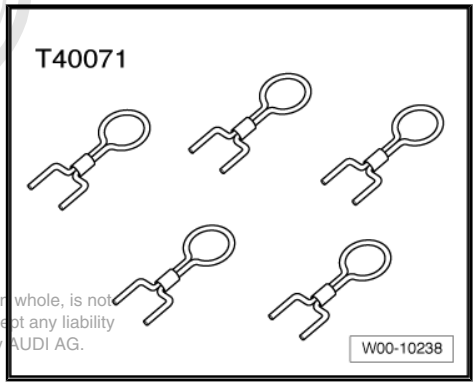

Protected by copyright. Copying for private or commercial purposes, in part or in whole, is not permitted unless authorised by AUDI AG. AUDI AG does not guarantee or accept any liability with respect to the correctness of information in this document. Copyright by AUDI AG.

- Drill bit, ∅ 3.3 mm

Removing

Note

All cable ties which are released or cut open when removing must be fitted in the same position when installing.

– Remove engine ⇒ page 8 .

Note

The engine/gearbox assembly remains on the scissor-type assembly platform - VAS 6131 A- (without detaching the gearbox) when performing the following repairs.

For better accessibility the subframe is removed as follows:

– Remove bolts -arrows- for front gearbox mountings (left and right).

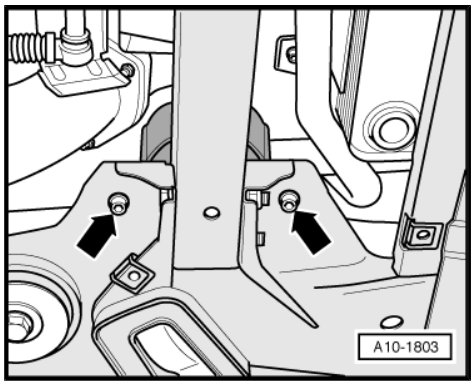

– Screw down spindles of support elements -2- (left and right) at subframe as far as possible.
– Remove locating lugs from spindles.
– Take out subframe -3- from the side.

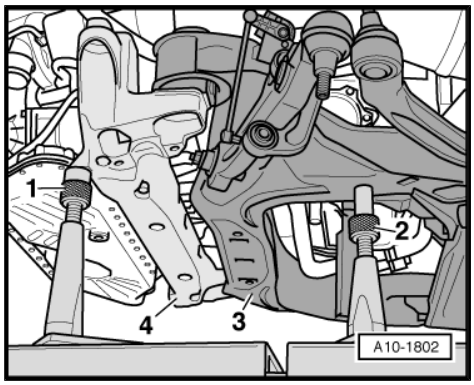

Note

- *A second mechanic is required for removing the subframe.*
- *Engine cross member -4- is not removed, the support elements -1- for engine cross member remain fitted.*

– Unplug electrical connectors -1-, -3-, -5- and -6-.
– Remove nut -2- and bolt -7- and detach bracket (right-side).

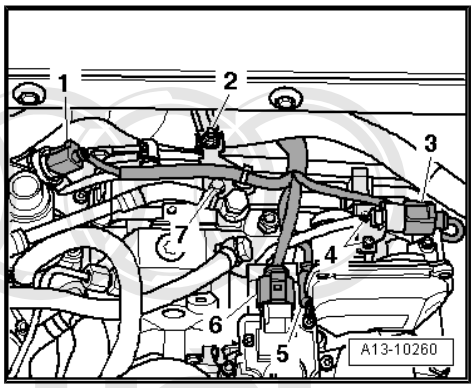

Note

Disregard -item 4-.

– Release retaining pegs -arrows- and detach toothed belt cover.
– Pivot toothed belt cover to the rear and disengage retaining pegs on bottom side of toothed belt cover.

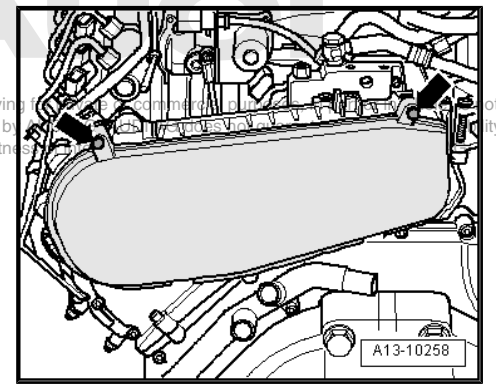

Protected by copyright. Copying for private or commercial purposes, in part or in whole, is not permitted unless authorised by AUDI AG. AUDI AG does not guarantee or accept any liability with respect to the correctness of information.

– Remove bolts -1- and -2-.
– Release clamp -arrow- and detach toothed belt cover (top section).

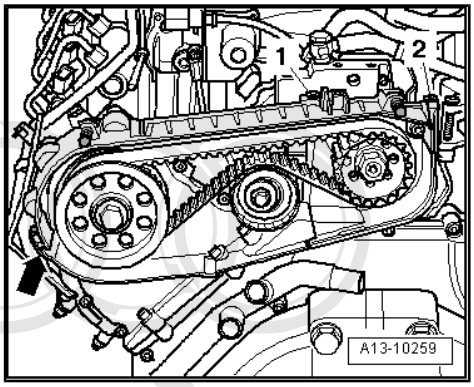

– Unscrew bolt -arrow- for tensioning roller.
– Take off tensioning roller and toothed belt for high-pressure pump.

Protected by copyright. Copying for private or commercial purposes, in part or in whole, is not permitted unless authorised by AUDI AG. AUDI AG does not guarantee or assume liability with respect to the correctness of information in this document.

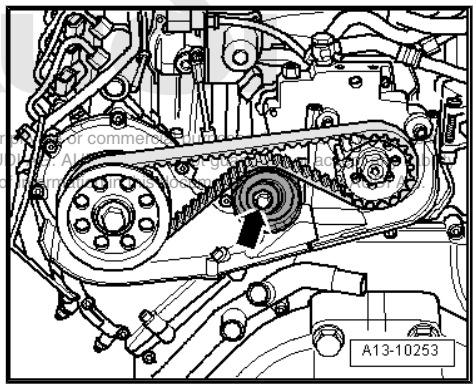

– Use counterhold tool - T10172- with -T10172/2- to loosen bolt for toothed belt drive sprocket.
– Remove bolt and take off toothed belt drive sprocket.

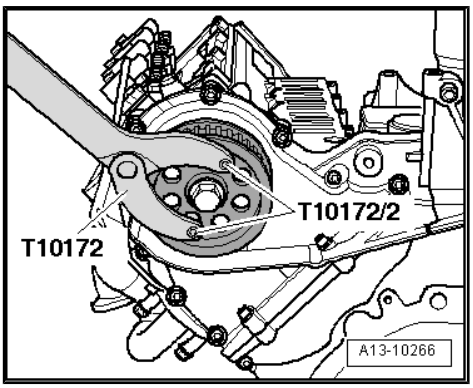

– Remove bolts -1 ... 4- and detach timing chain cover (left-side).

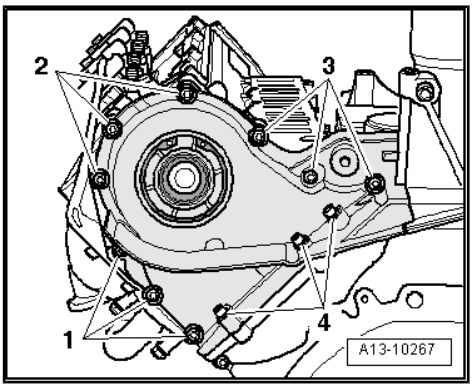

– Remove circlip -2-.
– Pull out adapter -1- for oil seal.
– Press oil seal out of adapter.

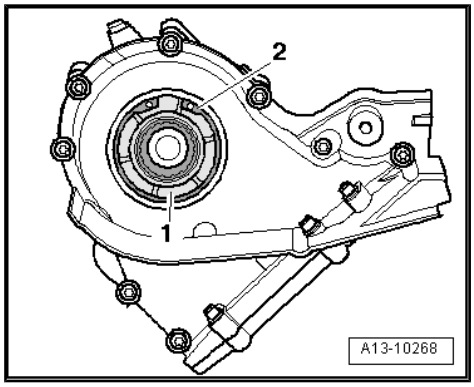

– Remove bolts -2- and -3-.
– Remove vacuum pump.

Note

Disregard -item 1-.

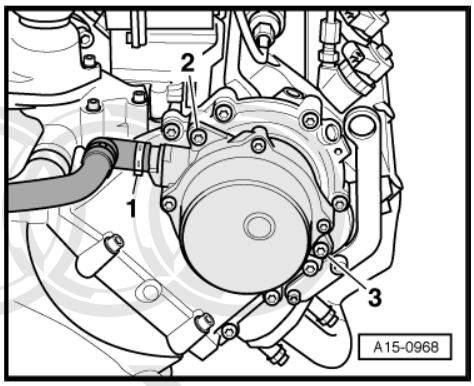

– Remove bolts -1 ... 4- and detach timing chain cover (right-side).

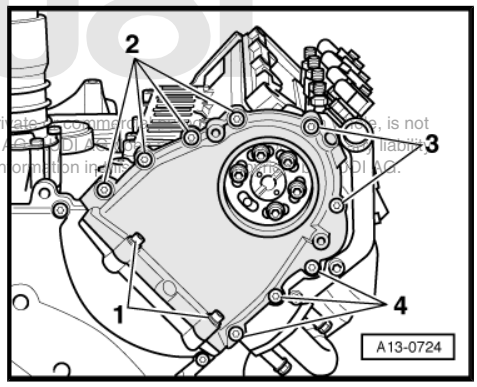

Protected by copyright. Copying for private or commercial purposes, in part or in whole, is not permitted unless authorised by AUDI AG. AUDI AG does not guarantee or assume any liability with respect to the correctness of information in this document. Copyright by AUDI AG.

– Insert guide pin of adapter - T40058- with the larger-diameter section -arrow 1- facing towards the engine. The smaller-diameter section -arrow 2- faces the adapter.

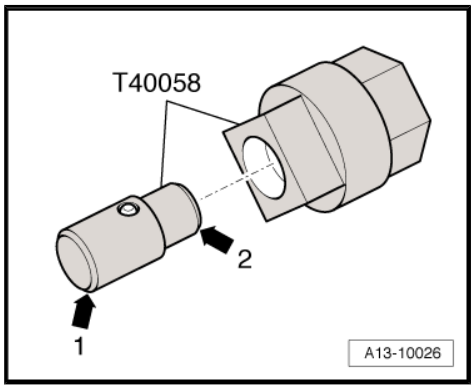

WARNING

Turn crankshaft only in direction of engine rotation.

If crankshaft has been turned past "TDC" position, turn crankshaft two further rotations until it is again positioned just before "TDC".

– Using adapter - T40058- turn the crankshaft in the normal direction of rotation -arrow- to TDC.

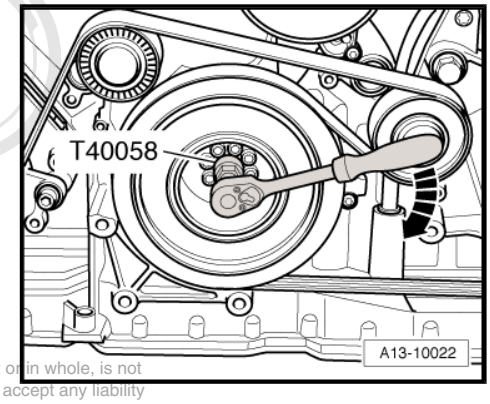

Protected by copyright. Copying for private or commercial purposes, in part or in whole, is not permitted unless authorised by AUDI AG. AUDI AG does not guarantee or accept any liability with respect to the correctness of information in this document. Copyright by AUDI AG.

Note

- *The adjustment pin - T40060- has a flat -2- which makes it easier to insert when the locating bores in the camshaft and cylinder head are not exactly in line.*
- *The adjustment pin is inserted initially so that the side pin -1- is perpendicular to the imaginary line between the adjustment pin and the centre of the camshaft.*
- *To obtain the correct TDC position, the side pin -1- must then be turned 90° -arrow- so it is in line with the imaginary line between the adjustment pin and the centre of the camshaft.*

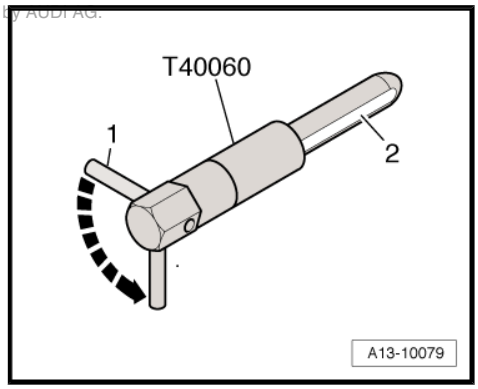

– Check that camshafts on both cylinder heads are positioned at TDC.

- It should be possible to lock both camshafts with adjustment pin - T40060- .
- The side pin -arrow- in each adjustment pin - T40060- must be in line with the imaginary line between the adjustment pin and the centre of the camshaft.

Cylinder bank 1 (right-side):

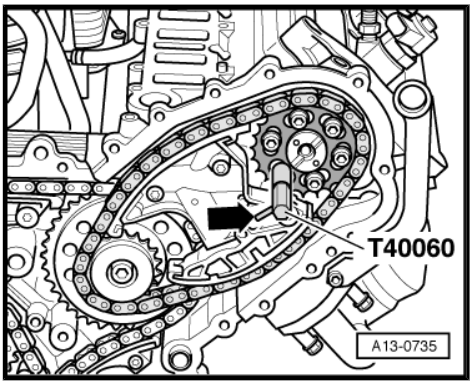

Cylinder bank 2 (left-side):

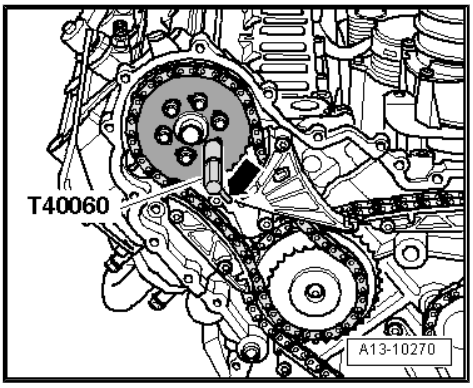

– Place a cloth under the sump to catch escaping engine oil.
– Unscrew plug -arrow- from sump (top section).

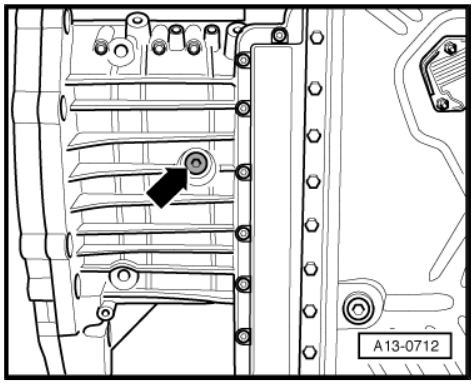

– Screw locking pin - 3242- into bore (20 Nm); if necessary, turn crankshaft -1- backwards and forwards slightly to fully centralise locking pin.

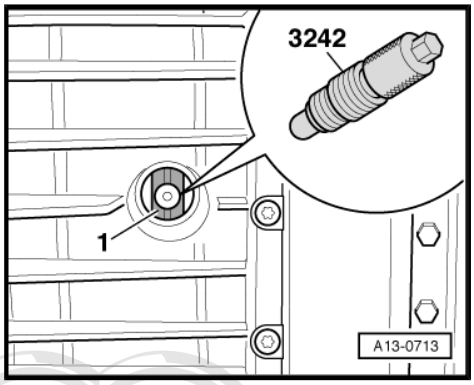

– Press tensioning rail of chain tensioner for timing chain (left-side) in direction of -arrow- and lock chain tensioner by inserting a 3.3 mm ∅ drill bit -item 1-.

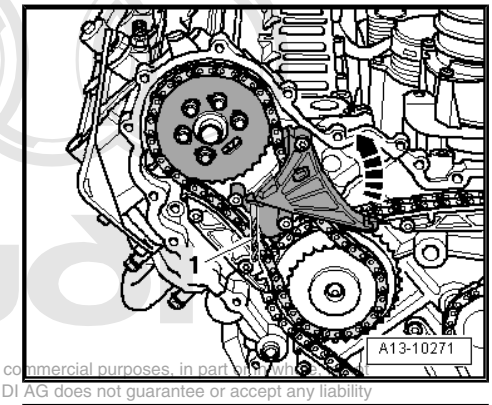

Protected by copyright. Copying for private or commercial purposes, in part or whole, is not permitted unless authorised by AUDI AG. AUDI AG does not guarantee or accept any liability with respect to the correctness of information in this document. Copyright by AUDI AG.

– Unscrew bolt -3- securing tensioning rail and detach tensioning rail.
– Unscrew bolts -1- from guide rail and -2- from camshaft sprocket.
– Remove camshaft sprocket and guide rail.

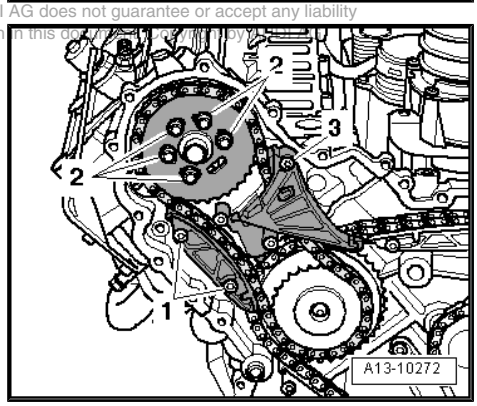

Note

Cover chain tensioner opening with a cloth or similar to stop small parts dropping in.

– Press guide rail of chain tensioner for timing chain (right-side) in direction of -arrow- and lock chain tensioner by inserting locking pin - T40071- .

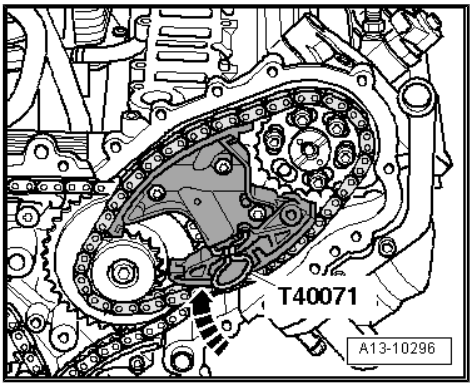

– Unscrew bolts -1- for chain tensioner and -2, 3- for camshaft sprocket.

– Remove camshaft sprocket and chain tensioner (right-side).

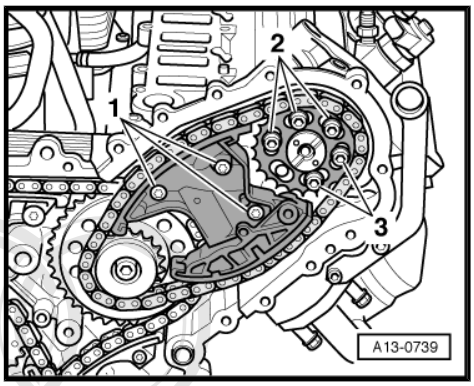

Note

Cover chain tensioner opening with a cloth or similar to stop small parts dropping in.

Installing

• Crankshaft -1- locked in TDC position with locking pin - 3242- .

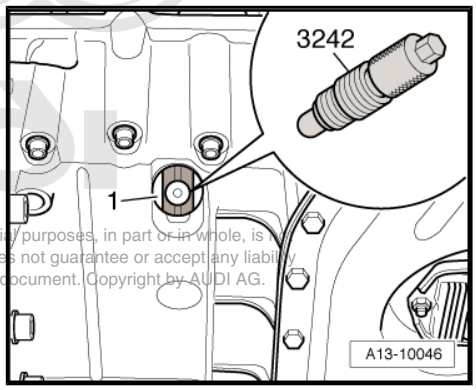

Note

Renew bolts which are tightened to a specified angle as well as seals and O-rings.

Protected by copyright. Copying for private or commercial purposes, in part or in whole, is not permitted unless authorised by AUDI AG. AUDI AG does not guarantee or accept any liability with respect to the correctness of information in this document. Copyright by AUDI AG.

Caution

The crankshaft must not be at TDC at any cylinder when the camshaft is turned. Otherwise, there is a risk of damage to valves and piston crowns.

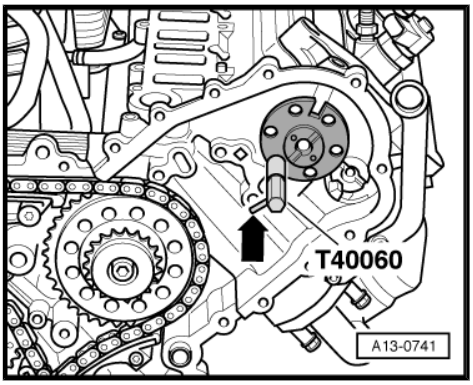

– Check that camshafts on both cylinder heads are positioned at TDC.

• It should be possible to lock both camshafts with adjustment pin - T40060- .

• The side pin -arrow- in each adjustment pin - T40060- must be in line with the imaginary line between the adjustment pin and the centre of the camshaft.

Cylinder bank 1 (right-side):

Cylinder bank 2 (left-side):

– Remove adjustment pin - T40060- from both camshafts.

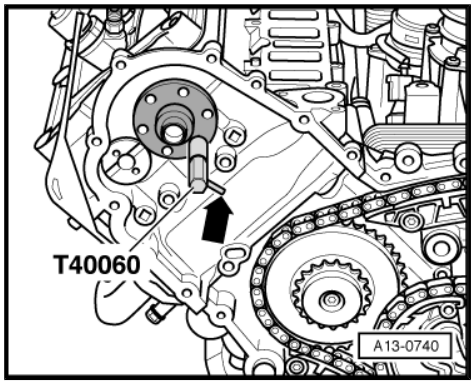

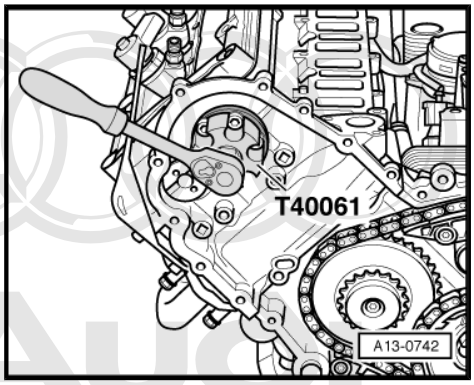

Note

If the adjustment pins cannot be inserted in the camshafts, the camshafts can be turned slightly using adapter - T40061- . To do so, screw two securing bolts for camshaft sprocket approx. 5 turns into camshaft.

Caution

The crankshaft must not be at TDC at any cylinder when the camshaft is turned. Otherwise, there is a risk of damage to valves and piston crowns.

Protected by copyright. Copying for private or commercial purposes, in part or in whole, is not permitted unless authorised by AUDI AG. AUDI AG does not guarantee or accept any liability with respect to the correctness of information in this document. Copyright by AUDI AG.

– Install timing chain (left-side) with camshaft sprocket, guide rail and tensioning rail.

• The elongated holes in the sprocket must be aligned centrally over the tapped holes in the camshaft.

– Tighten bolts -1- and -3- for guide rail and tensioning rail.

– Screw in two bolts -2- for sprocket, but do not tighten bolts.

• It should just be possible to turn the sprocket on the camshaft without axial movement.

– Lock camshaft (left-side) with adjustment pin - T40060- .

• The side pin -arrow- on the adjustment pin - T40060- must be in line with the imaginary line between the adjustment pin and the centre of the camshaft.

– Pull out drill bit (∅ 3.3 mm) -item 4- from hole; this releases the chain tensioner (left-side).

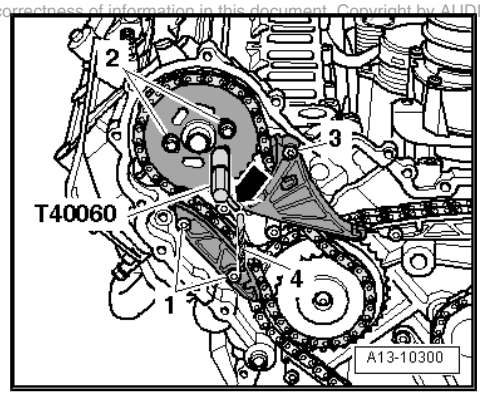

– Install timing chain (right-side) with camshaft sprocket and chain tensioner.

• The elongated holes in the sprocket must be aligned centrally over the tapped holes in the camshaft.

– Tighten bolts -1- for chain tensioner.

– Screw in two bolts -2- for sprocket, but do not tighten bolts.

• It should just be possible to turn the sprocket on the camshaft without axial movement.

– Lock camshaft (right-side) with adjustment pin - T40060- .

• The side pin -arrow- on the adjustment pin - T40060- must be in line with the imaginary line between the adjustment pin and the centre of the camshaft.

– Pull locking pin - T40071- out of locating hole, this releases the chain tensioner (right-side).

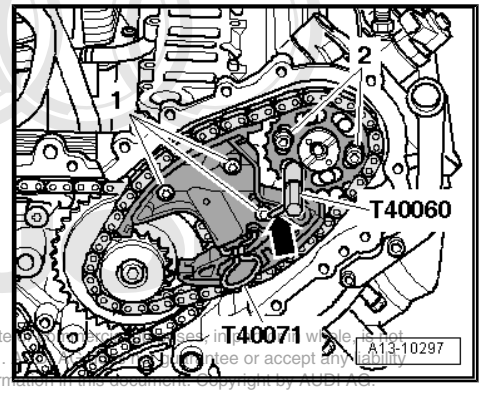

Protected by copyright. Copying for private or commercial purposes, in part or in whole, is not permitted unless authorised by AUDI AG. AUDI AG does not guarantee or accept any liability with respect to the correctness of information in this document. Copyright by AUDI AG.

– Using a torque wrench and adapter - T40062- , apply a torque of 20 Nm to camshaft sprocket (right-side) in the direction indicated (-arrow-). Maintain this torque for the following step.

– Tighten bolts -1- and -2-.

– Take off adapter - T40062- and pull out adjustment pin - T40060- .

– Tighten remaining bolts for sprocket (right-side).

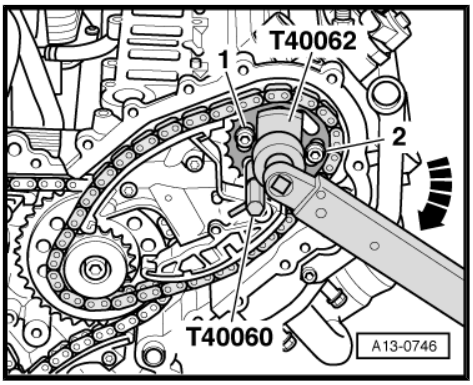

– Using a torque wrench and adapter - T40062- , apply a torque of 15 Nm to camshaft sprocket (left-side) in the direction indicated (-arrow-). Maintain this torque for the following step.

– Tighten bolts -1- and -2-.

– Take off adapter - T40062- and pull out adjustment pin - T40060- .

– Tighten remaining bolts for sprocket (left-side).

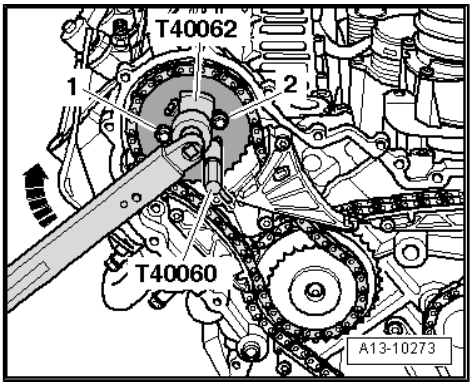

– Remove locking pin - 3242- .

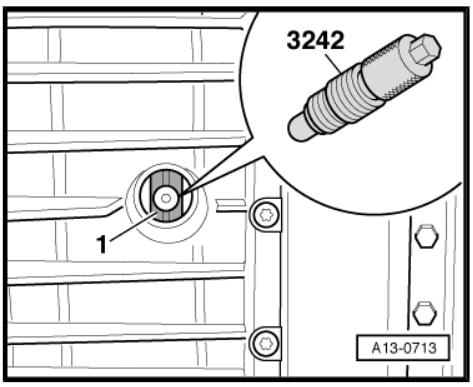

Checking valve timing

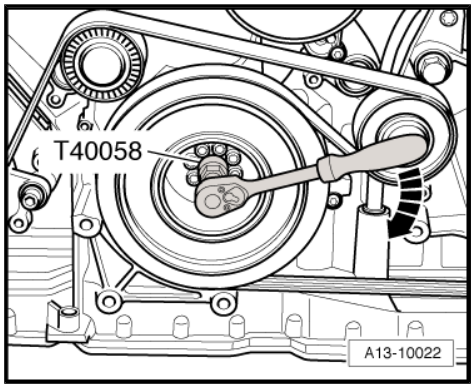

> ⚠ **WARNING**
>
> *Turn crankshaft only in direction of engine rotation.*
>
> *If crankshaft has been turned past "TDC" position, turn crankshaft two further rotations until it is again positioned just before "TDC". Then turn further in the same direction and lock crankshaft with locking pin - 3242- .*

– Turn crankshaft two rotations in normal direction of rotation -arrow- until the crankshaft is just before TDC again.

– While turning in this direction, lock crankshaft -1- with locking pin - 3242- . Tighten locking pin to 20 Nm.

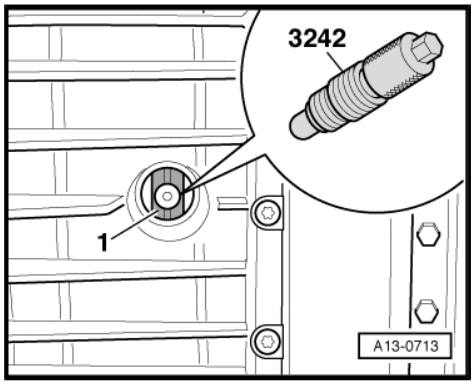

– Check that it is now possible to lock the camshafts with adjustment pin - T40060- .

- The side pin -arrow- in each adjustment pin - T40060- must be in line with the imaginary line between the adjustment pin and the centre of the camshaft.

Protected by copyright. Copying for private or commercial purposes, in part or in whole, is not permitted unless authorised by AUDI AG. AUDI AG does not guarantee or accept any liability with respect to the correctness of information in this document. Copyright by AUDI AG.

Cylinder bank 1 (right-side):

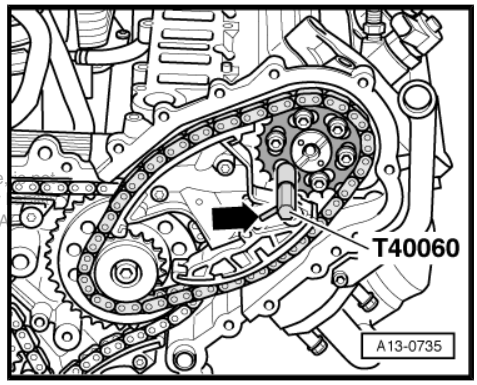

Cylinder bank 2 (left-side):

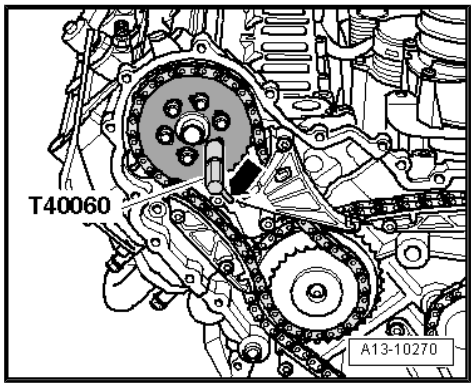

Adjusting valve timing

If the adjustment pin cannot be inserted in one of the camshafts:

– Loosen all bolts -arrows- on the relevant sprocket approx. 1 turn.

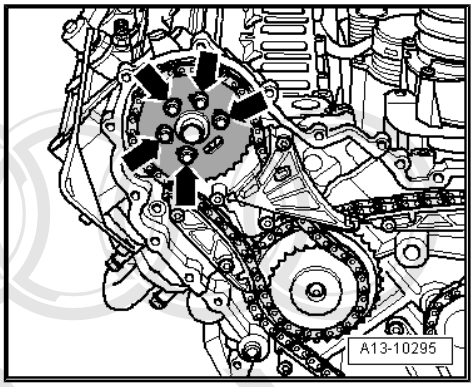

– Apply adapter - T40061- to the heads of the loosened bolts.

– Turn camshaft slightly backwards and forwards with adapter - T40061- until adjustment pin - T40060- can be inserted.

• The side pin -arrow- on the adjustment pin - T40060- must be in line with the imaginary line between the adjustment pin and the centre of the camshaft.

– Take off adapter - T40061- and tighten bolts (adjustment pin - T40060- remains inserted).

– Remove adjustment pin - T40060- .

– Repeat this procedure on the other cylinder bank if necessary.

– Remove locking pin - 3242- .

– Check valve timing once again ⇒ page 128 .

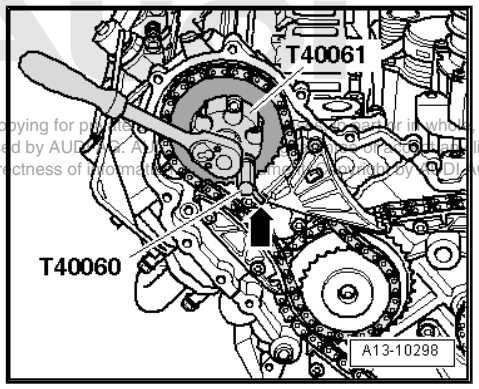

Protected by copyright. Copying for private or commercial purposes, in part or in whole, is not permitted unless authorised by AUDI AG. AUDI AG does not guarantee or accept any liability with respect to the correctness of information in this document. Copyright by AUDI AG.

Remaining installation steps are carried out in reverse sequence; note the following:

– Screw plug -arrow- for TDC mark into top section of sump with a new seal.

– Install timing chain covers ⇒ page 112 .

– Install drive plate ⇒ page 71 .

– Install engine ⇒ page 40 .

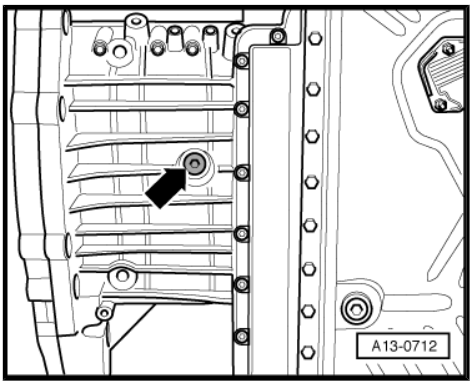

Tightening torques

Component	Nm
Camshaft sprocket to camshaft	24
Guide rail to cylinder head (left-side)	5 + 90° 1)2)
Tensioning rail to cylinder head (left-side)	5 + 90° 1)2)
Chain tensioner to cylinder head (right-side)	5 + 90° 1)2)
Screw plug in top section of sump	35

• 1) Renew bolts.

• 2) 90° = one quarter turn.

1.5 Removing and installing camshaft timing chains

Special tools and workshop equipment required

- Locking pin - 3242-
- Special wrench - T40049-
- 2x Adjustment pin - T40060-
- Adapter - T40061-
- Adapter - T40062-
- Locking pin - T40071-

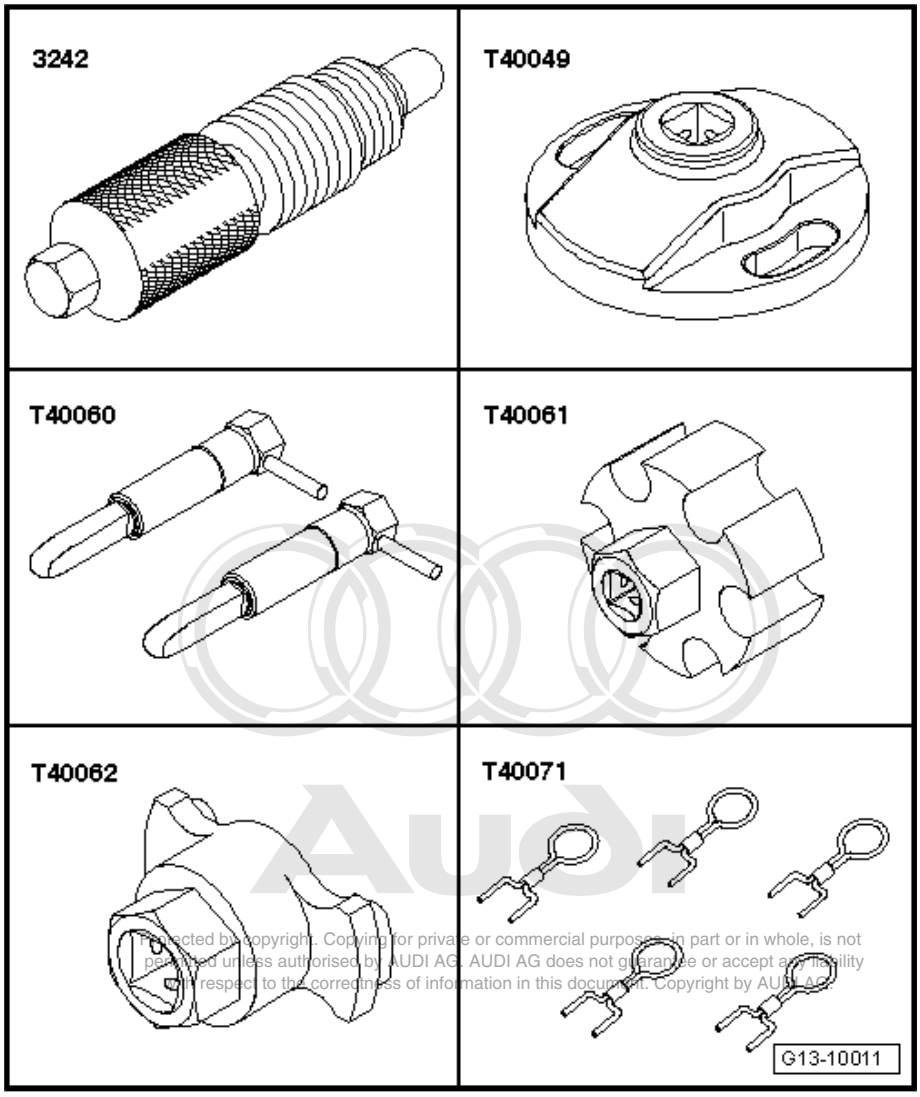

Protected by copyright. Copying for private or commercial purposes, in part or in whole, is not permitted unless authorised by AUDI AG. AUDI AG does not guarantee or accept any liability with respect to the correctness of information in this document. Copyright by AUDI AG.

- Used oil collection and extraction unit - V.A.G 1782- or -VAS 6622A-

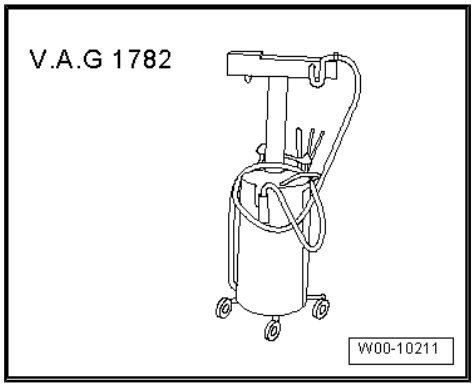

- Drill bit, ∅ 3.3 mm

Removing

Caution

The crankshaft and camshafts must only be turned with the chain drive mechanism fully installed. Otherwise the valves may strike the pistons, causing damage to valves and piston crowns.

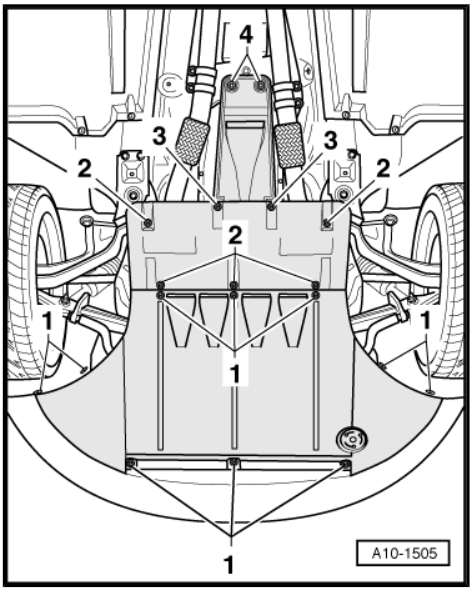

- Release fasteners -1-, -2- and -4- and take off noise insulation panels.
- Position used oil collection and extraction unit below engine.
- Drain off engine oil.
- Remove engine ⇒ page 8 .
- Separate engine from gearbox ⇒ page 31 .
- Secure engine to engine stand ⇒ page 38 , or leave engine on scissor-type assembly platform - VAS 6131 A- .
- Remove timing chain covers ⇒ page 108 .
- Attach special wrench - T40049- at rear end of crankshaft using two old securing bolts for drive plate.

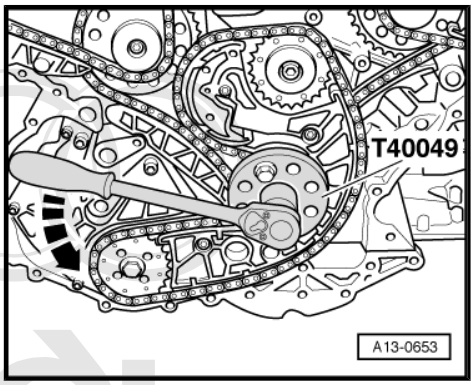

WARNING

Turn crankshaft only in direction of engine rotation.

If crankshaft has been turned past "TDC" position, turn crankshaft two further rotations until it is again positioned just before "TDC".

- Turn crankshaft in normal direction of rotation -arrow- to TDC position.

Note

Protected by copyright. Copying for private or commercial purposes, in part or in whole, is not permitted unless authorised by AUDI AG. AUDI AG does not guarantee or assume any liability with respect to the correctness of information in this document. Copyright by AUDI AG.

- *The adjustment pin - T40060- has a flat -2- which makes it easier to insert when the locating bores in the camshaft and cylinder head are not exactly in line.*
- *The adjustment pin is inserted initially so that the side pin -1- is perpendicular to the imaginary line between the adjustment pin and the centre of the camshaft.*
- *To obtain the correct TDC position, the side pin -1- must then be turned 90° -arrow- so it is in line with the imaginary line between the adjustment pin and the centre of the camshaft.*

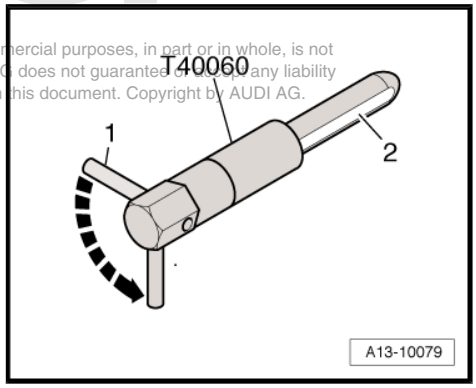

- It should be possible to lock both camshafts with adjustment pin - T40060- .
- The side pin -arrow- in each adjustment pin - T40060- must be in line with the imaginary line between the adjustment pin and the centre of the camshaft.

Cylinder bank 1 (right-side):

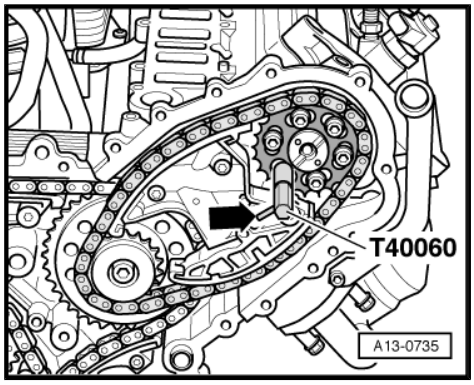

Cylinder bank 2 (left-side):

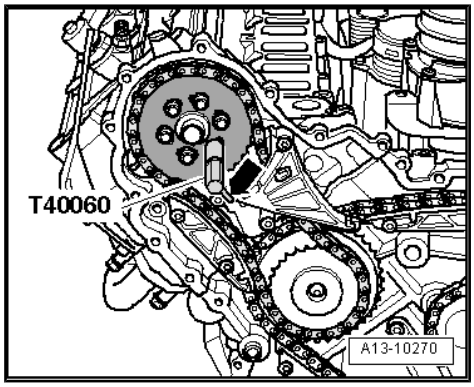

Protected by copyright. Copying for private or commercial purposes, in part or in whole, is not permitted unless authorised by AUDI AG. AUDI AG does not guarantee or assume any liability with respect to the correctness of information in this document. Copyright by AUDI AG.

– Place a cloth under the sump to catch escaping engine oil.
– Unscrew plug -arrow- from sump (top section).

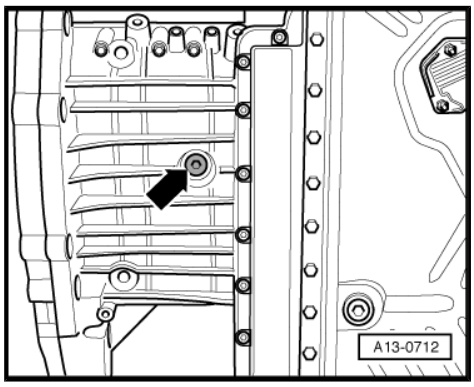

– Screw locking pin - 3242- into bore (20 Nm); if necessary, turn crankshaft -1- backwards and forwards slightly to fully centralise locking pin.

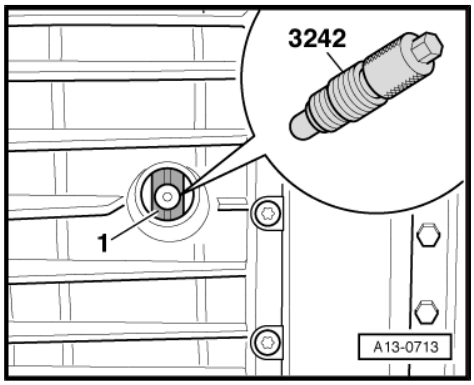

– Wrap insulating tape around tip and shaft of 3.3 mm ∅ drill bit to avoid cuts.
– Press tensioning rail of chain tensioner for timing chain (left-side) in direction of -arrow- and lock chain tensioner by inserting a 3.3 mm ∅ drill bit -item 1-.
– Mark running direction of timing chain (left-side) with paint.
– Remove adjustment pin - T40060- from both camshafts.

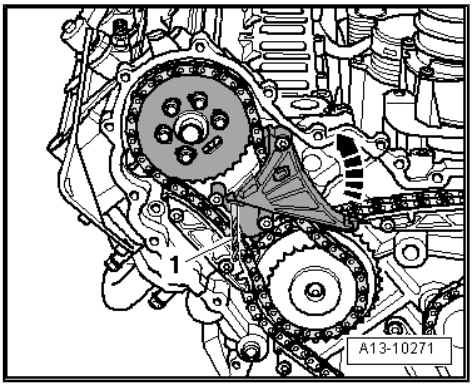

– Unscrew bolt -3- securing tensioning rail and detach tensioning rail.
– Unscrew bolts -1- from guide rail and -2- from camshaft sprocket.
– Remove camshaft sprocket, guide rail and timing chain (left-side).

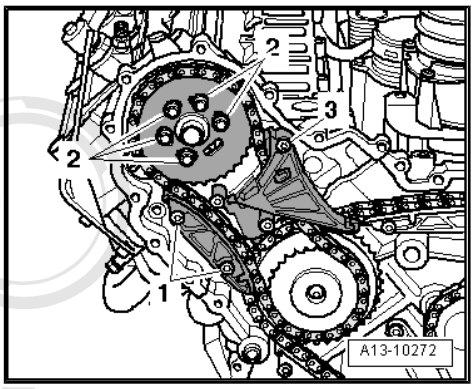

– Press tensioning rail of chain tensioner for timing chain (right-side) in direction of -arrow- and lock chain tensioner by inserting locking pin - T40071- .
– Mark running direction of timing chain (right-side) with paint.

Protected by copyright. Copies for private or commercial purposes, in part or in whole, are not permitted unless authorised by AUDI AG. AUDI AG does not guarantee or assume any liability with respect to the correctness of information in this document. Copyright by AUDI AG.

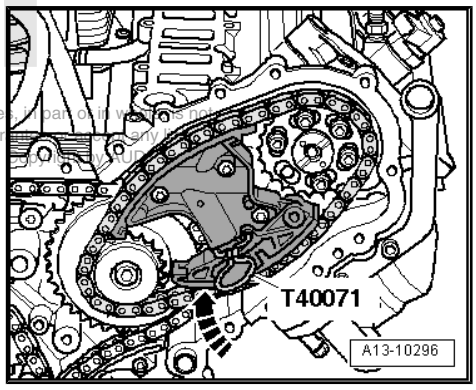

– Unscrew bolts -1- for chain tensioner and -2, 3- for camshaft sprocket.
– Take off camshaft sprocket, chain tensioner and timing chain (right-side).

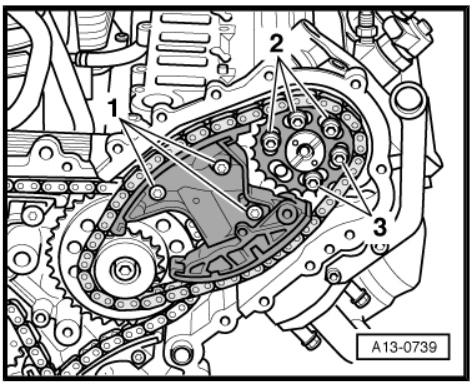

Installing

- Crankshaft -1- locked in TDC position with locking pin - 3242- .
- Drive chain for valve gear installed ⇒ page 140

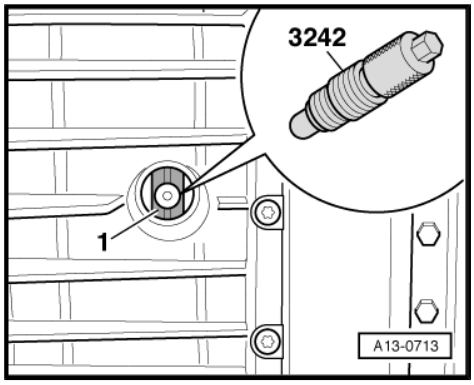

Note

Renew bolts which are tightened to a specified angle as well as oil seals and gaskets.

Caution

The crankshaft must not be at TDC at any cylinder when the camshaft is turned. Otherwise, there is a risk of damage to valves and piston crowns.

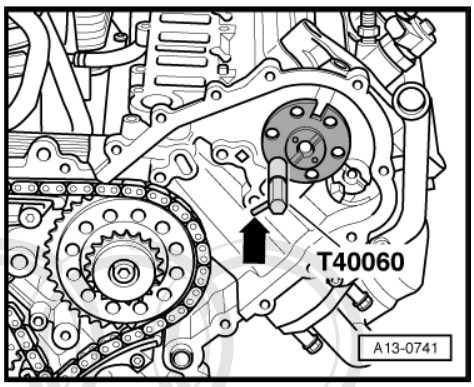

– Check that camshafts on both cylinder heads are positioned at TDC.
- It should be possible to lock both camshafts with adjustment pin - T40060- .
- The side pin -arrow- in each adjustment pin - T40060- must be in line with the imaginary line between the adjustment pin and the centre of the camshaft.

Cylinder bank 1 (right-side):

Cylinder bank 2 (left-side):

– Remove adjustment pin - T40060- from both camshafts.

Protected by copyright. Copying for private or commercial purposes, in part or in whole, is not permitted unless authorised by AUDI AG. AUDI AG does not guarantee or accept any liability with respect to the correctness of information/data/programs protected by copyright.

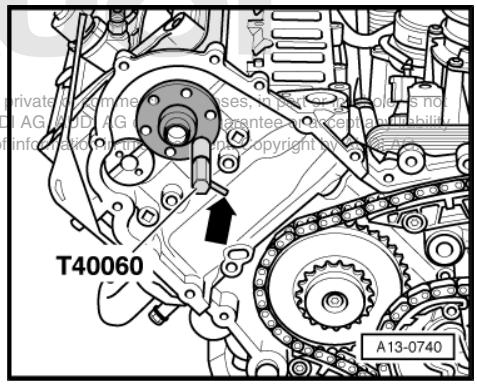

Note

If the adjustment pins cannot be inserted in the camshafts, the camshafts can be turned slightly using adapter - T40061- . To do so, screw two securing bolts for camshaft sprocket approx. 5 turns into camshaft.

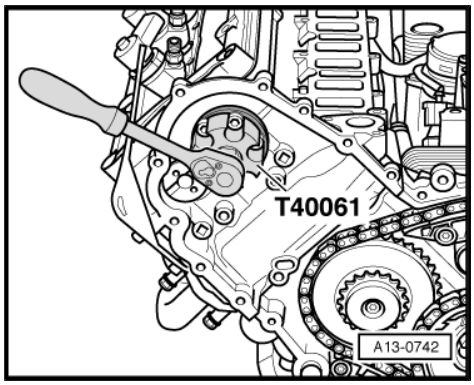

Caution

The crankshaft must not be at TDC at any cylinder when the camshaft is turned. Otherwise, there is a risk of damage to valves and piston crowns.

– Install timing chain (left-side) with camshaft sprocket, guide rail and tensioning rail.

• The elongated holes in the sprocket must be aligned centrally over the tapped holes in the camshaft.

– Tighten bolts -1- and -3- for guide rail and tensioning rail.

– Screw in two bolts -2- for sprocket, but do not tighten bolts.

• It should just be possible to turn the sprocket on the camshaft without axial movement.

– Lock camshaft (left-side) with adjustment pin - T40060- .

• The side pin -arrow- on the adjustment pin - T40060- must be in line with the imaginary line between the adjustment pin and the centre of the camshaft.

– Pull out drill bit (∅ 3.3 mm) -item 4- from hole; this releases the chain tensioner (left-side).

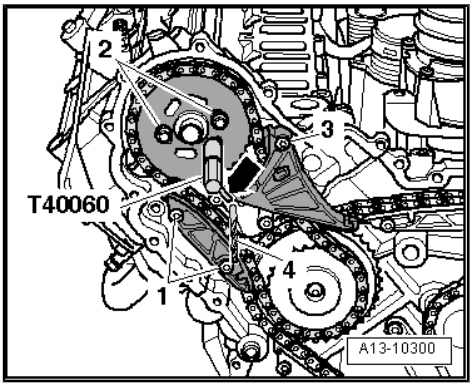

– Install timing chain (right-side) with camshaft sprocket and chain tensioner.

• The elongated holes in the sprocket must be aligned centrally over the tapped holes in the camshaft.

– Tighten bolts -1- for chain tensioner.

– Screw in two bolts -2- for sprocket, but do not tighten bolts.

• It should just be possible to turn the sprocket on the camshaft without axial movement.

– Lock camshaft (right-side) with adjustment pin - T40060- .

• The side pin -arrow- on the adjustment pin - T40060- must be in line with the imaginary line between the adjustment pin and the centre of the camshaft.

– Pull locking pin - T40071- out of locating hole, this releases the chain tensioner (right-side).

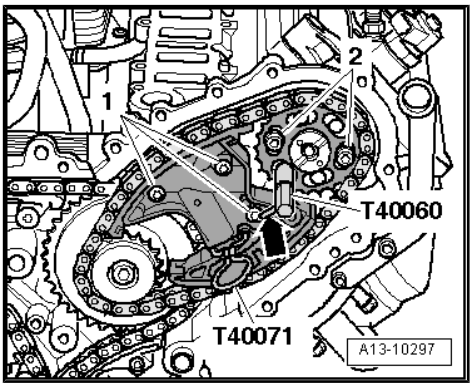

– Using a torque wrench and adapter - T40062- , apply a torque of 20 Nm to camshaft sprocket (right-side) in the direction indicated (-arrow-). Maintain this torque for the following step.

– Tighten bolts -1- and -2-.

– Take off adapter - T40062- and pull out adjustment pin - T40060- .

– Tighten remaining bolts for sprocket (right-side).

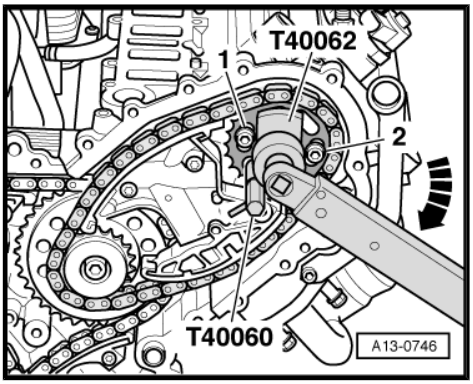

– Using a torque wrench and adapter - T40062- , apply a torque of 15 Nm to camshaft sprocket (left-side) in the direction indicated (-arrow-). Maintain this torque for the following step.

– Tighten bolts -1- and -2-.

– Take off adapter - T40062- and pull out adjustment pin - T40060- .

– Tighten remaining bolts for sprocket (left-side).

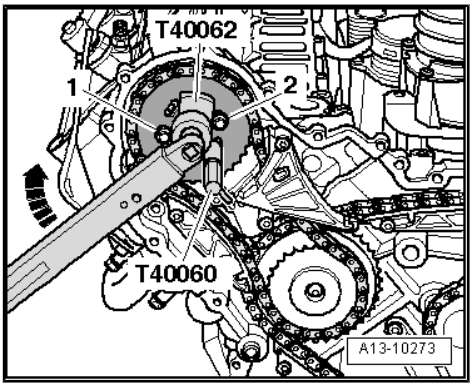

Protected by copyright. Copying for private or commercial purposes, in part or in whole, is not permitted unless authorised by AUDI AG. AUDI AG does not guarantee or accept any liability with respect to the correctness of information in this document. Copyright by AUDI AG.

– Remove locking pin - 3242- .

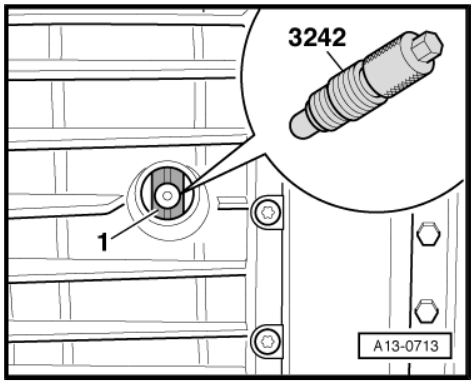

Checking valve timing

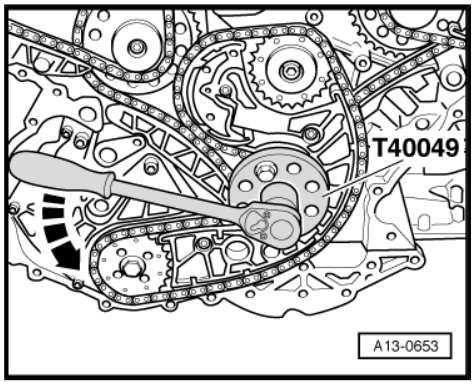

> ⚠ **WARNING**
>
> *Turn crankshaft only in direction of engine rotation.*
>
> *If crankshaft has been turned past "TDC" position, turn crankshaft two further rotations until it is again positioned just before "TDC". Then turn further in the same direction and lock crankshaft with locking pin - 3242- .*

– Using special wrench - T40049- , turn crankshaft two rotations in normal direction of rotation -arrow- until crankshaft is just before TDC again.

– While turning in this direction, lock crankshaft -1- with locking pin - 3242- . Tighten locking pin to 20 Nm.

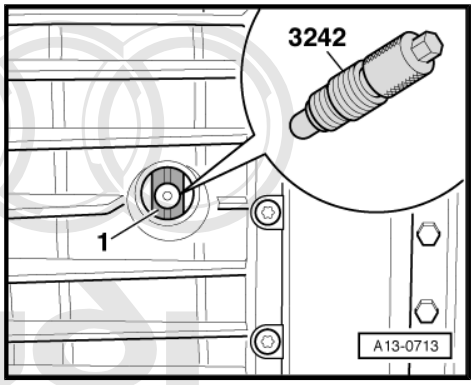

– Check that it is now possible to lock the camshafts with adjustment pin - T40060- .

- The side pin -arrow- in each adjustment pin - T40060- must be in line with the imaginary line between the adjustment pin and the centre of the camshaft.

Cylinder bank 1 (right-side):

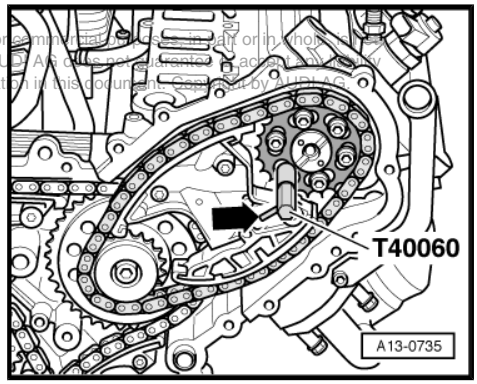

Protected by copyright. Copying for private or commercial purposes, in part or in whole, is not permitted unless authorised by AUDI AG. AUDI AG does not guarantee or accept any liability with respect to the correctness of information in this document. Copyright by AUDI AG.

Cylinder bank 2 (left-side):

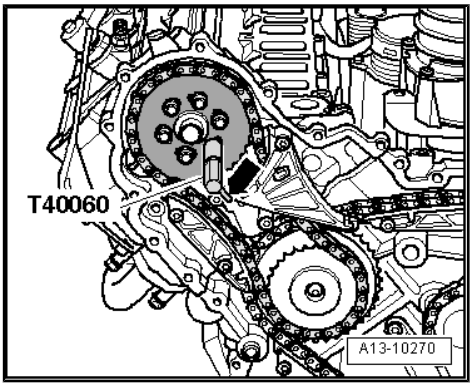

Adjusting valve timing

Protected by copyright. Copying for private or commercial purposes, in part or in whole, is not permitted unless authorised by AUDI AG. AUDI AG does not guarantee or accept any liability with respect to the correctness of information in this document. Copyright by AUDI AG.

If the adjustment pin cannot be inserted in one of the camshafts:

– Loosen all bolts -arrows- on the relevant sprocket approx. 1 turn.

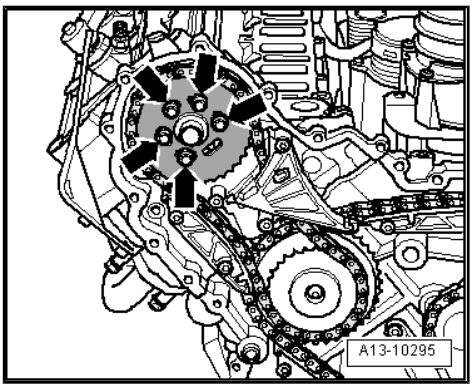

– Apply adapter - T40061- to the heads of the loosened bolts.
– Turn camshaft slightly backwards and forwards with adapter - T40061- until adjustment pin - T40060- can be inserted.
• The side pin -arrow- on the adjustment pin - T40060- must be in line with the imaginary line between the adjustment pin and the centre of the camshaft.
– Take off adapter - T40061- and tighten bolts (adjustment pin - T40060- remains inserted).
– Remove adjustment pin - T40060- .
– Repeat this procedure on the other cylinder bank if necessary.
– Remove locking pin - 3242- .
– Check valve timing once again ⇒ page 136 .

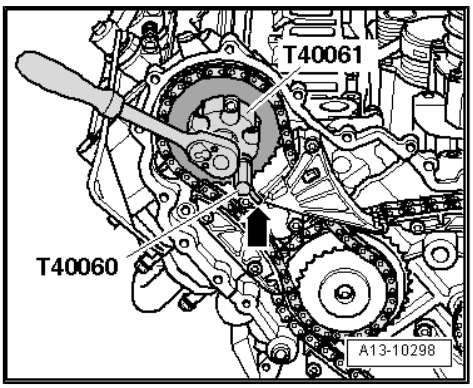

Remaining installation steps are carried out in reverse sequence; note the following:

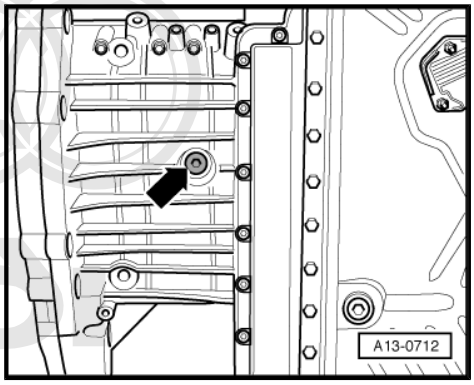

- Screw plug -arrow- for TDC mark into top section of sump with a new seal.
- Install timing chain covers ⇒ page 112 .
- Install drive plate ⇒ page 71 .
- Bolt gearbox to engine and install engine/gearbox assembly ⇒ page 40 .
- Fill up with engine oil and check engine oil level ⇒ Maintenance ; Booklet 404 .

Protected by copyright. Copying for private or commercial purposes, in part or in whole, is not permitted unless authorised by AUDI AG. AUDI AG does not guarantee or accept any liability with respect to the correctness of information in this document. Copyright by AUDI AG.

Tightening torques

Component	Nm
Camshaft sprocket to camshaft	24
Guide rail to cylinder head (left-side)	5 + 90° 1)2)
Tensioning rail to cylinder head (left-side)	5 + 90° 1)2)
Chain tensioner to cylinder head (right-side)	5 + 90° 1)2)
Screw plug in top section of sump	35

- 1) Renew bolts.
- 2) 90° = one quarter turn.

1.6 Drive chain for valve gear - exploded view

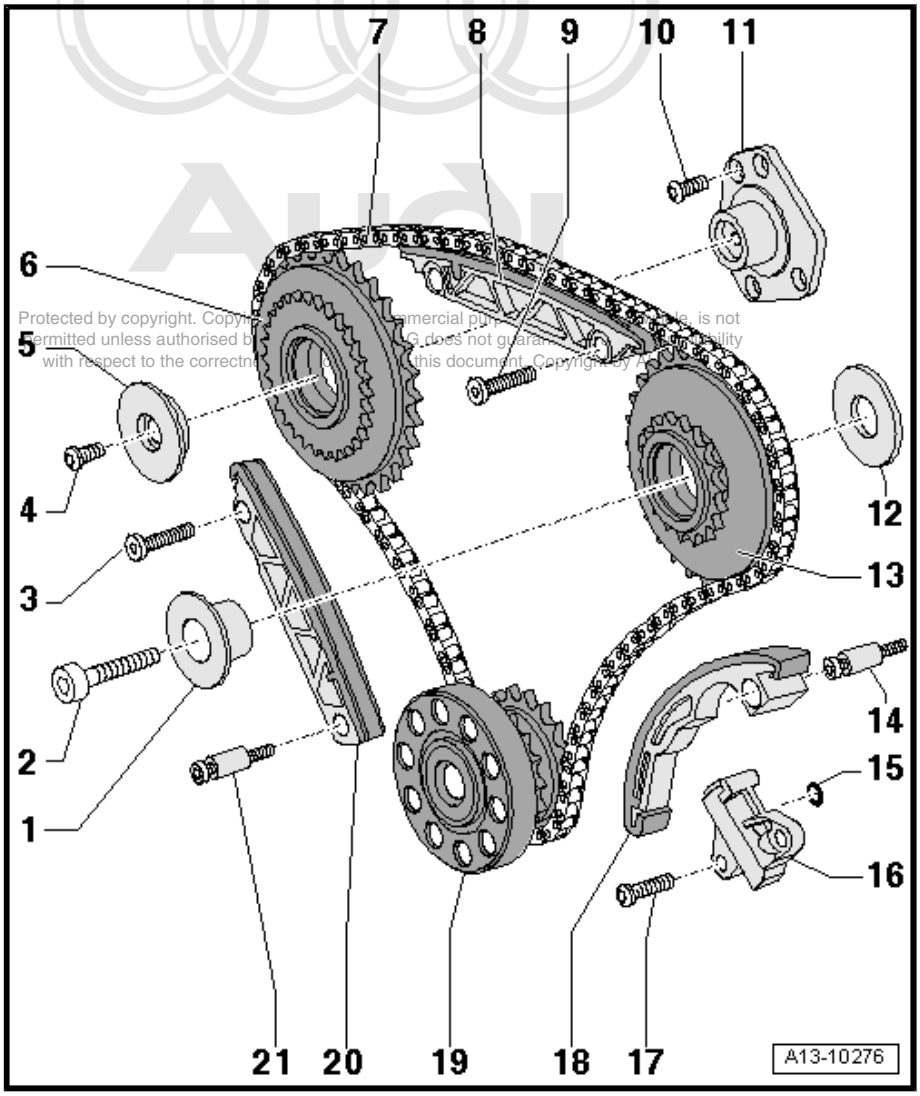

Protected by copyright. Copyright by AUDI AG. Commercial purposes, is not permitted unless authorised by AUDI AG. AUDI AG does not guarantee or assume any liability with respect to the correctness of information in this document. Copyright by AUDI AG.

1 - Bearing mounting for drive sprocket

2 - 20 Nm + 45° ($^1/_8$ turn) further

- ❑ Renew

3 - 5 Nm + 90° ($^1/_4$ turn) further

- ❑ Renew

4 - 5 Nm + 90° ($^1/_4$ turn) further

- ❑ Renew

5 - Thrust washer for drive sprocket

6 - Drive sprocket for timing chain (left-side)

7 - Drive chain for valve gear

- ❑ Before removing, mark running direction with paint

8 - Guide rail

- ❑ Note installation position

9 - 5 Nm + 90° ($^1/_4$ turn) further

- ❑ Renew

10 - 5 Nm + 90° ($^1/_4$ turn) further

- ❑ Renew

11 - Bearing bracket for drive sprocket

12 - Thrust washer

13 - Drive sprocket for timing chain (right-side)

14 - Bolt with sleeve: 5 Nm + 90° ($^1/_4$ turn) further

- ❑ Renew

15 - O-ring

- ❑ Renew

16 - Chain tensioner

17 - 5 Nm + 90° ($^1/_4$ turn) further

- ❑ Renew

18 - Tensioning rail

19 - Crankshaft

- ❑ With chain sprockets

20 - Guide rail

21 - Bolt with sleeve: 5 Nm + 90° ($^1/_4$ turn) further

- ❑ Renew

1.7 Removing and installing drive chain for valve gear

Special tools and workshop equipment required

- Used oil collection and extraction unit - V.A.G 1782- or -VAS 6622A-

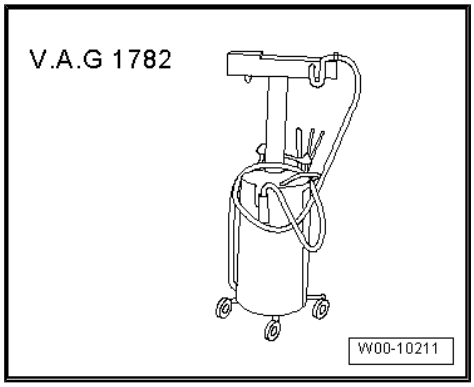

- Locking pin - T40071-

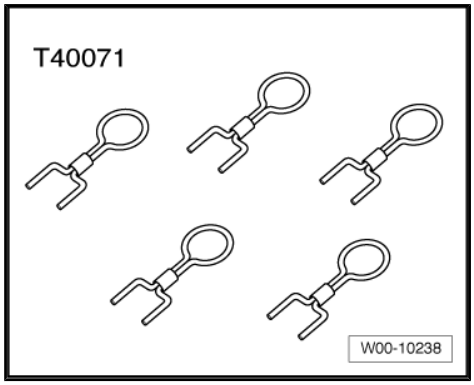

Removing

- Release fasteners -1-, -2- and -4- and take off noise insulation panels.
- Position used oil collection and extraction unit below engine.
- Drain off engine oil.
- Remove engine ⇒ page 8 .
- Separate engine from gearbox ⇒ page 31 .
- Secure engine to engine stand ⇒ page 38 .
- Remove timing chain covers ⇒ page 108 .
- Remove camshaft timing chains ⇒ page 129 .
- Remove chain for auxiliary drives ⇒ page 142 .

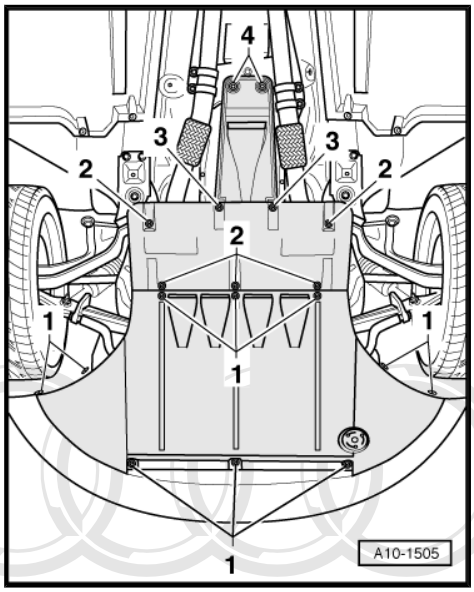

Protected by copyright. Copying for private or commercial purposes, in part or in whole, is not permitted unless authorised by AUDI AG. AUDI AG does not guarantee or accept any liability with respect to the correctness of information in this document. Copyright by AUDI AG.

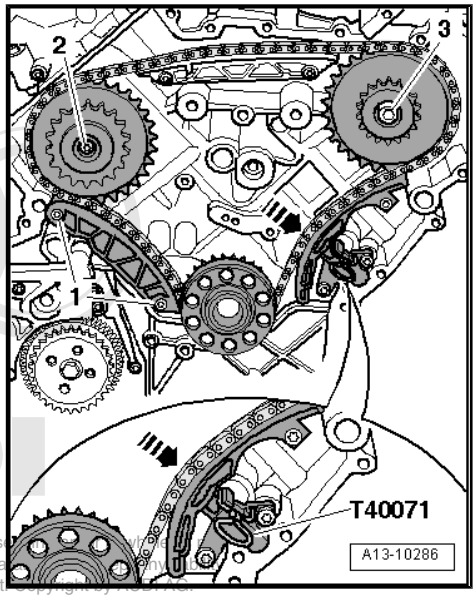

– Press tensioning rail of chain tensioner for drive chain in direction of -arrow- and lock chain tensioner by inserting locking pin - T40071- .
– Mark running direction of chain with paint.
– Unscrew bolts -1- for guide rail and detach guide rail.
– Remove bolts -2- and -3- and detach chain sprockets with drive chain.

Installing

Installation is carried out in the reverse order; note the following:

– Install chain for auxiliary drives ⇒ page 142 .
– Install camshaft timing chains ⇒ page 129 .
– Install timing chain covers ⇒ page 112 .
– Install drive plate ⇒ page 71 .
– Install engine ⇒ page 40 .

Protected by copyright. Copying for private or commercial purposes, in part or in whole, is not permitted unless authorised by AUDI AG. AUDI AG does not guarantee or assume any liability with respect to the correctness of information in this document. Copyright by AUDI AG.

Tightening torques

Component	Nm
Drive chain sprocket (left-side) to bearing bracket	5 + 90° 1)2)
Drive chain sprocket (right-side) to cylinder block	45
Guide rail to cylinder block	5 + 90° 1)2)

- 1) Renew bolts.
- 2) 90° = one quarter turn.

1.8 Chain for auxiliary drives - exploded view

1 - 5 Nm + 90° (1/4 turn) further
- ❑ Renew

2 - Chain tensioner
- ❑ With guide rail

3 - Gasket
- ❑ Renew

4 - 45 Nm

5 - Bearing mounting
- ❑ For idler sprocket

6 - Idler sprocket
- ❑ For chain of auxiliary drives
- ❑ Installation position: wide collar facing towards the rear

7 - Thrust washer

8 - Chain for auxiliary drives
- ❑ Before removing, mark running direction with paint
- ❑ Removing and installing ⇒ page 142

9 - Crankshaft

10 - Drive chain sprocket
- ❑ For auxiliary drives

11 - Bolt
- ❑ 62 Nm

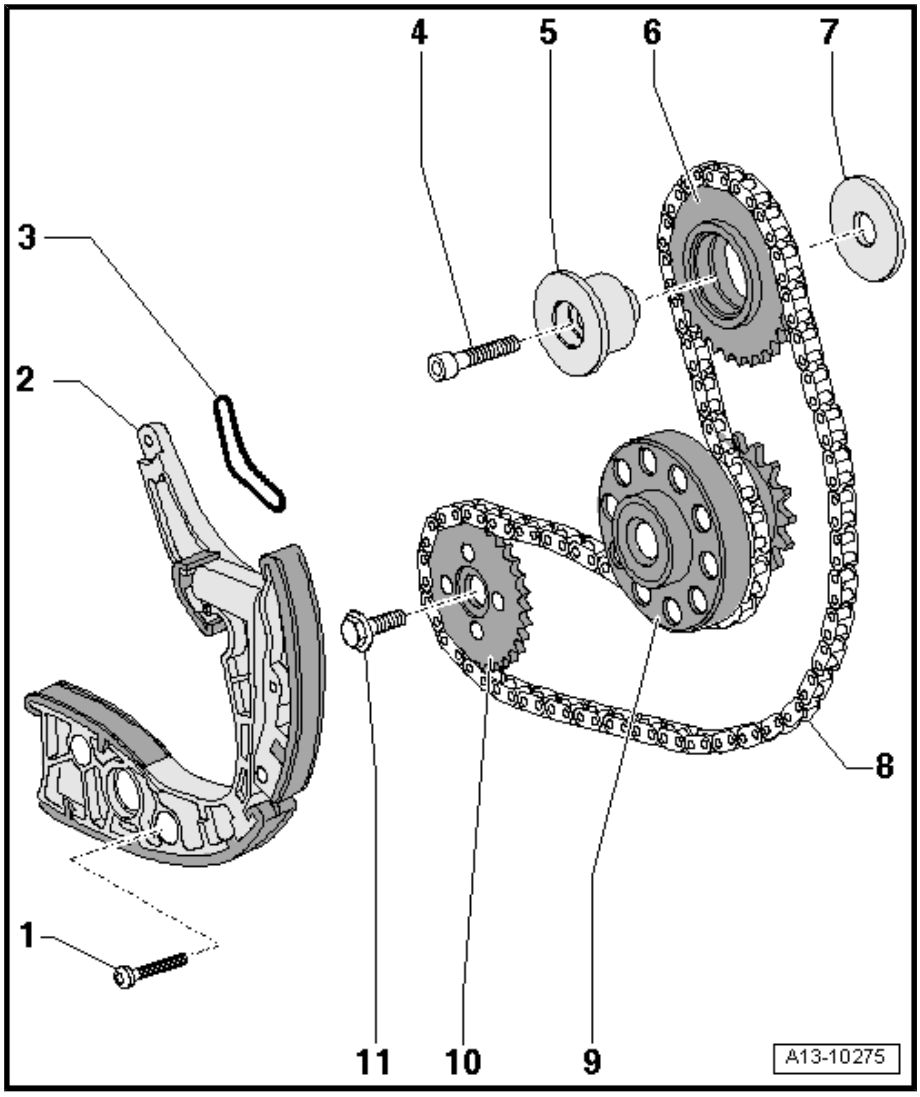

1.9 Removing and installing chain for auxiliary drives

Special tools and workshop equipment required

- Used oil collection and extraction unit - V.A.G 1782- or -VAS 6622A-

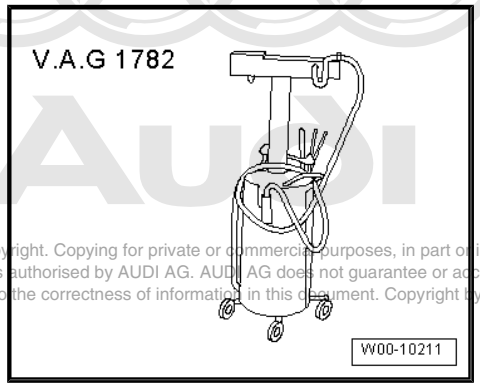

Protected by copyright. Copying for private or commercial purposes, in part or in whole, is not permitted unless authorised by AUDI AG. AUDI AG does not guarantee or accept any liability with respect to the correctness of information in this document. Copyright by AUDI AG.

♦ Locking pin - T40071-

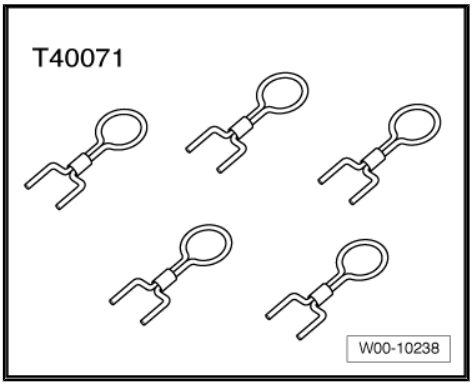

Removing

– Release fasteners -1-, -2- and -4- and take off noise insulation panels.

– Position used oil collection and extraction unit below engine.

– Drain off engine oil.

– Remove engine ⇒ page 8 .

– Separate engine from gearbox ⇒ page 31 .

– Secure engine to engine stand ⇒ page 38 .

– Remove timing chain covers ⇒ page 108 .

Protected by copyright. Copying for private or commercial purposes, in part or in whole, is not permitted unless authorised by AUDI AG. AUDI AG does not guarantee or accept any liability with respect to the correctness of information in this document. Copyright by AUDI AG.

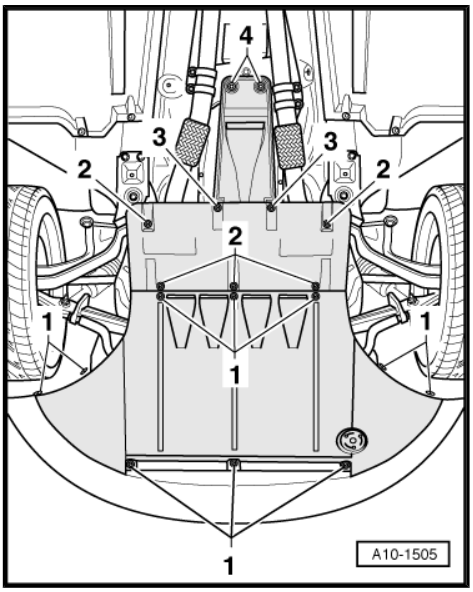

– Press tensioning rail in direction of -arrow- and lock chain tensioner by inserting locking pin - T40071- .

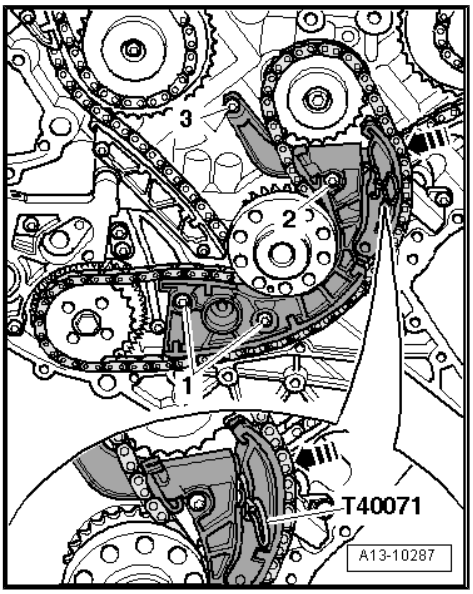

Note

Should you need to remove the chain sprocket for auxiliary drives, you must first loosen the securing bolt before removing the chain.

– Mark running direction of chain for auxiliary drives with paint.

– Unscrew bolts -1 … 3- and remove chain tensioner.

– Remove chain for auxiliary drives.

Installing

Installation is carried out in the reverse order; note the following:

Note

Renew bolts which are tightened to a specified angle as well as seal.

– First fit chain for auxiliary drives.

– Fit chain tensioner to engine (fit top bolt first) and fit chain onto guide rails (working from bottom to top).

– Tighten bolts -1 ... 3- for chain tensioner.
– Press tensioning rail in direction of -arrow- and take locking pin - T40071- out of chain tensioner.
– Install timing chain covers ⇒ page 112 .
– Install drive plate ⇒ page 71 .
– Bolt gearbox to engine and install engine/gearbox assembly ⇒ page 40 .
– Fill up with engine oil and check engine oil level ⇒ Maintenance ; Booklet 404 .

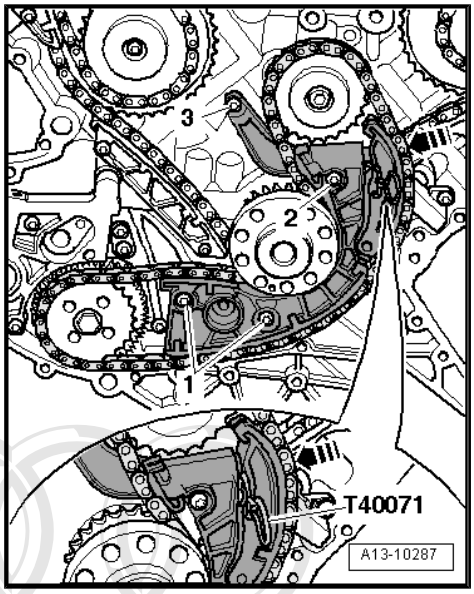

Tightening torque

Component	Nm
Chain tensioner to cylinder block	5 + 90° 1)2)
• 1) Renew bolts. • 2) 90° = one quarter turn.	

1.10 Auxiliary drives - exploded view

1 - Bolt
- ❑ Tightening torque ⇒ Item 11 (page 142)

2 - Compression spring

3 - 5 Nm + 60°
- ❑ Renew
- ❑ Tighten in diagonal sequence

4 - Spur gear drive
- ❑ With flat-section O-ring in power steering pump drive ⇒ page 145
- ❑ Removing and installing ⇒ page 148

5 - Oil seal
- ❑ For power steering pump drive
- ❑ Renewing ⇒ page 145

6 - O-ring
- ❑ Renew

7 - Oil pipe

8 - O-ring
- ❑ Renew

9 - O-ring
- ❑ Inserted in sump (top section)
- ❑ Renew

10 - Drive shaft for power steering pump
- ❑ With 2 rubber buffers

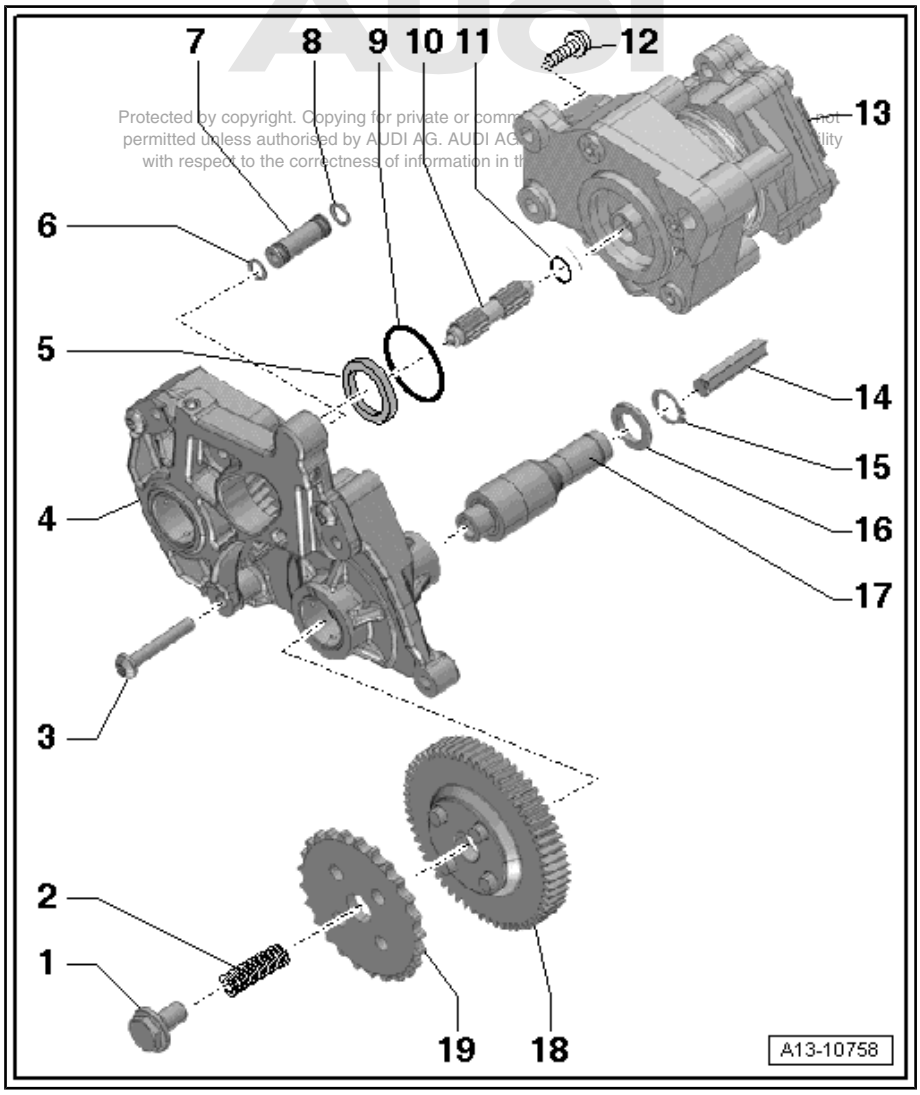

Protected by copyright. Copying for private or comm... not permitted unless authorised by AUDI AG. AUDI AG... liability with respect to the correctness of information in th...

11 - Flat-section O-ring

- ❑ Installation position ⇒ page 145

12 - Bolt

- ❑ Tightening torque ⇒ Rep. gr. 48

13 - Power steering pump

- ❑ Removing and installing ⇒ Rep. gr. 48

14 - Oil pump drive shaft

15 - Circlip

16 - Thrust washer

17 - Shaft for drive spur gear

18 - Drive spur gear

- ❑ For auxiliary drives
- ❑ Cannot be renewed separately

Protected by copyright. Copying for private or commercial purposes, in part or in whole, is not permitted unless authorised by AUDI AG. AUDI AG does not guarantee or accept any liability with respect to the correctness of information in this document. Copyright by AUDI AG.

19 - Drive chain sprocket

- ❑ For auxiliary drives

Installation position of flat-section O-ring

- ♦ In power steering pump drive -arrow-.

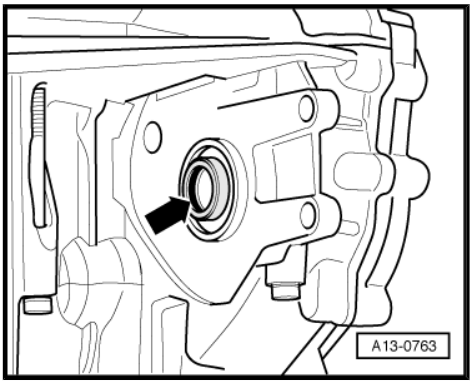

1.11 Renewing oil seal for power steering pump drive

Special tools and workshop equipment required

- ♦ Used oil collection and extraction unit - V.A.G 1782- or -VAS 6622A-

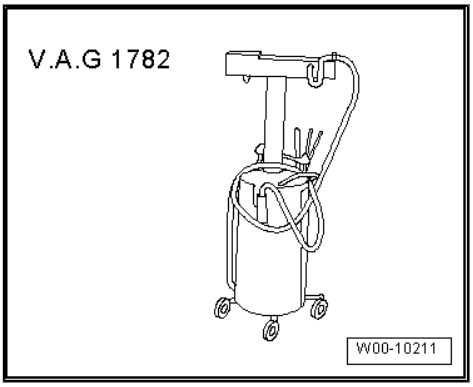

♦ Thrust piece - T40193-

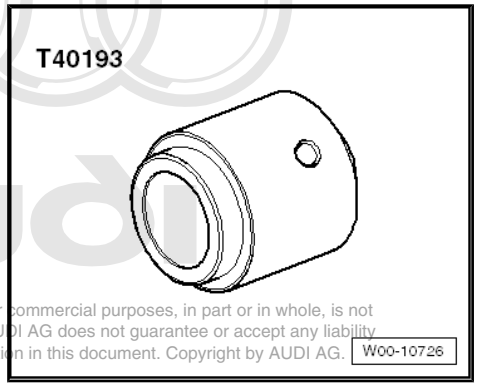

Protected by copyright. Copying for private or commercial purposes, in part or in whole, is not permitted unless authorised by AUDI AG. AUDI AG does not guarantee or accept any liability with respect to the correctness of information in this document. Copyright by AUDI AG.

♦ Oil seal extractor - T40195-

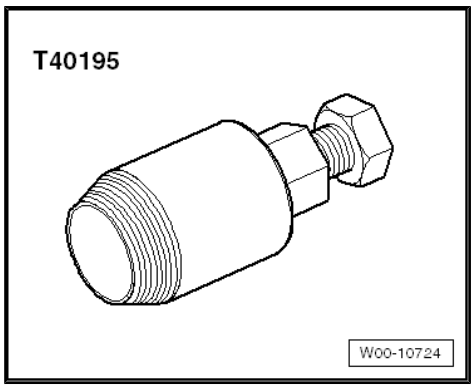

Procedure

– Extract hydraulic fluid for power steering from reservoir using used oil collection and extraction unit .
– Lower subframe for repair and assembly work ⇒ page 52 .
– Remove starter catalytic converter ⇒ page 295 .
– Unbolt left-side drive shaft from gearbox flange.
– Position used oil collection and extraction unit below power steering pump.
– Disconnect return hose -1- from power steering pump.
– Unbolt hydraulic pressure pipe -2- at power steering pump.
– Remove bolts -3- and -4-.
– Remove power steering pump.

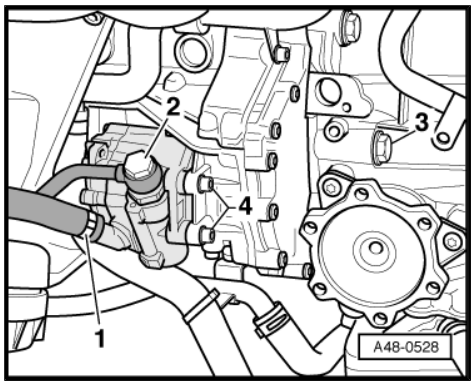

– Unplug electrical connector -2- at engine mounting (left-side).
– Unscrew bolt -1- and remove engine mounting left-side).

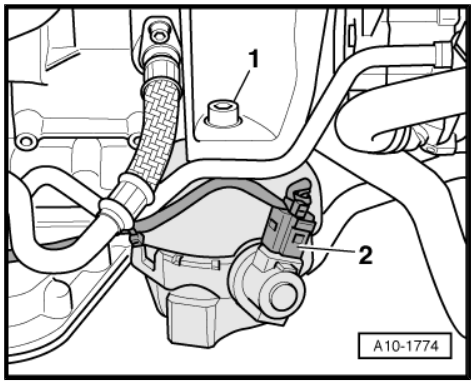

– Remove bolts -arrows- and detach engine support (left-side).

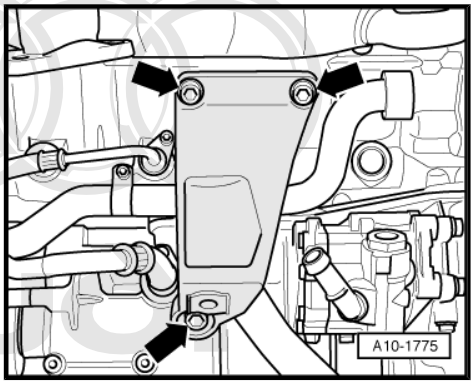

Protected by copyright. Copying for private or commercial purposes, in part or in whole, is not permitted unless authorised by AUDI AG. AUDI AG does not guarantee or assume any liability with respect to the correctness of information.

– Screw spindle of oil seal extractor -T40195- all the way out.
– Lubricate threaded head of oil seal extractor, place it in position and, exerting firm pressure, screw it into oil seal for power steering pump drive as far as possible.
– Turn inner part of oil seal extractor against spur gear drive until the oil seal is pulled out.

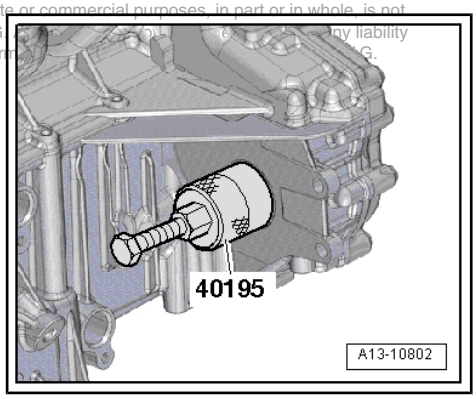

Note

If the sections of the oil seal come apart, apply oil seal extractor again and pull out remaining part of oil seal.

– Clamp hexagon flats of oil seal extractor in vice and use pliers to remove oil seal.
– Clean contact surface and sealing surface.

– Drive oil seal for power steering pump drive in onto stop with thrust piece -T40193- .

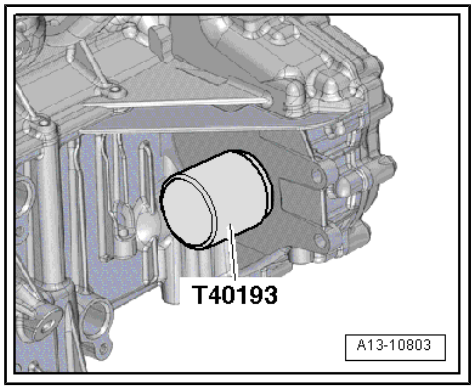

Remaining installation steps are carried out in reverse sequence; note the following:

Note

- *Renew seals and O-rings.*
- *Secure all hose connections with the correct type of hose clips (same as original equipment) ⇒ Electronic parts catalogue .*

– Install engine cross member and engine mounting ⇒ page 46 .

– Install power steering pump ⇒ Rep. gr. 48 .

– Install drive shaft (left-side) ⇒ Rep. gr. 40 .

– Install starter catalytic converter ⇒ page 295 .

– Fill up hydraulic fluid for power steering and bleed steering system ⇒ Rep. gr. 48 .

– Install subframe ⇒ Rep. gr. 40 .

– Tighten subframe bolts only to specified torque (do not turn further). Do not tighten bolts to final setting until after wheel alignment check has been performed ⇒ Rep. gr. 40 .

WARNING

The vehicle must not be driven at this stage.

– Perform wheel alignment check ⇒ Rep. gr. 44 .

WARNING

Tighten bolts for subframe to final setting after performing wheel alignment check.

1.12 Removing and installing spur gear drive

Special tools and workshop equipment required

- Used oil collection and extraction unit - V.A.G 1782- or -VAS 6622A-

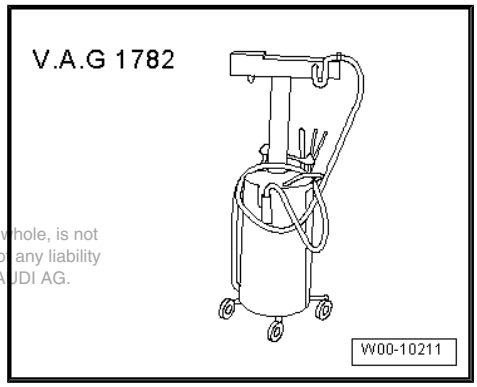

Protected by copyright. Copying for private or commercial purposes, in part or in whole, is not permitted unless authorised by AUDI AG. AUDI AG does not guarantee or accept any liability with respect to the correctness of information in this document. Copyright by AUDI AG.

Removing

– Release fasteners -1-, -2- and -4- and take off noise insulation panels.

– Position used oil collection and extraction unit below engine.

– Drain off engine oil.

– Remove engine ⇒ page 8 .

– Separate engine from gearbox ⇒ page 31 .

– Secure engine to engine stand ⇒ page 38, or leave engine on scissor-type assembly platform - VAS 6131 A- .

– Remove timing chain covers ⇒ page 108 .

Protected by copyright. Copying for private or commercial purposes, in part or in whole, is not permitted unless authorised by AUDI AG. Audi AG does not guarantee or accept any liability with respect to the correctness of information in this document. Copyright by AUDI AG.

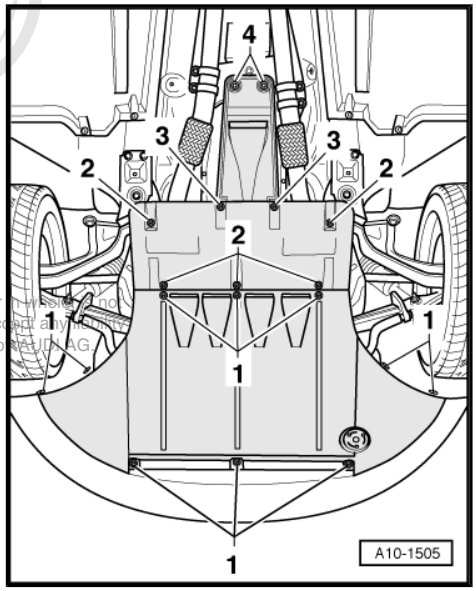

Note

Lay a cloth under the separating point to catch escaping hydraulic fluid.

– Unbolt hydraulic pressure pipe -1- at power steering pump.

– Unbolt power steering pump from sump (top section) -arrows-.

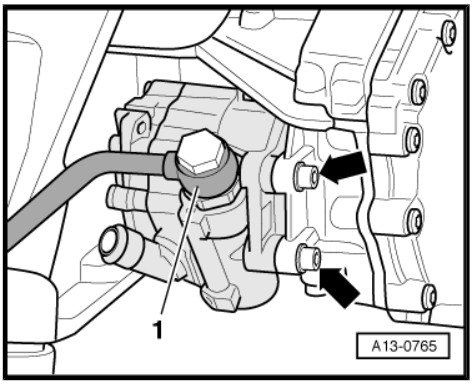

– Unscrew bolt -1- at drive chain sprocket -2- several turns.

– Remove chain for auxiliary drives ⇒ page 142 .

– Unbolt drive chain sprocket for auxiliary drives.

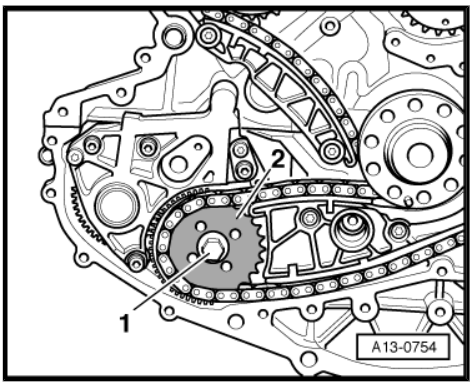

– Unscrew bolts -1 ... 5- and detach spur gear drive.

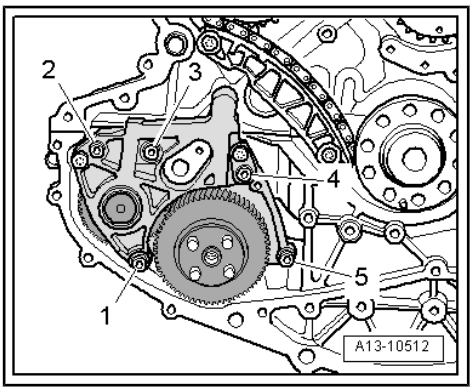

– Remove spring -2- between spur gear drive -1- and drive shaft -3- for oil pump.

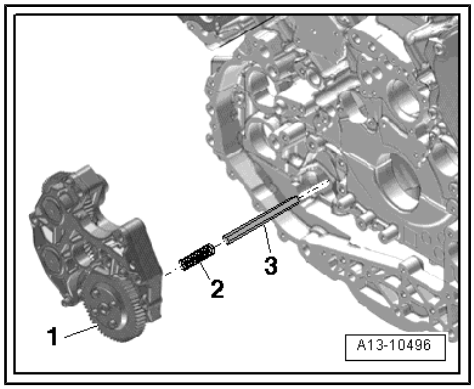

Installing

Note

Renew seals and O-rings.

– Renew oil seal for power steering pump drive ⇒ page 145 .

– Insert drive shaft -arrow- for oil pump into guide sleeve at oil pump.

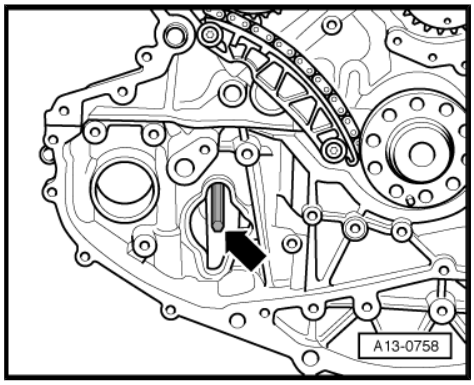

Note

To ensure that drive shaft engages correctly in oil pump, insert drive shaft separately into oil pump (NOT together with spur gear drive).

– Fit O-ring -arrow- in sump (top section).

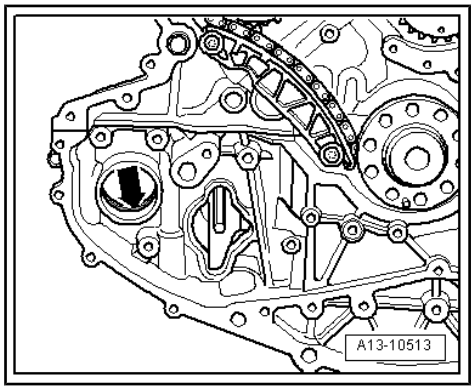

Protected by copyright. Copying for private or commercial purposes, in part or in whole, is not permitted unless authorised by AUDI AG. AUDI AG does not guarantee or accept any liability with respect to the correctness of information in this document. Copyright by AUDI AG.

– Fit O-rings -2- on oil pipe -1-.

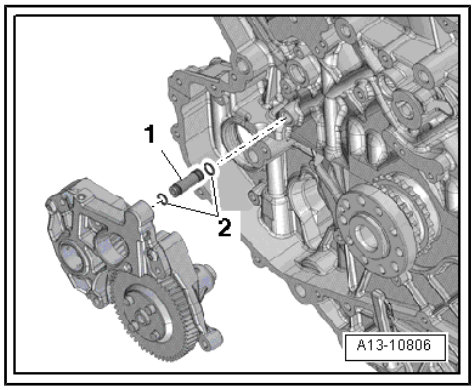

– Insert spring -2- for drive shaft -3- in spur gear drive -1-.

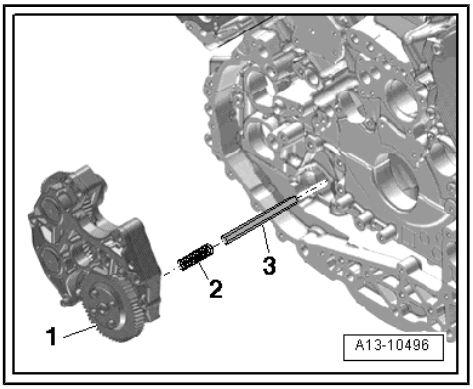

Note

To ensure that drive shaft engages correctly in oil pump, insert drive shaft separately into oil pump (NOT together with spur gear drive).

– Make sure that rubber buffers -1- and -3- are bonded into drive shaft -2- for power steering pump and drive shaft is inserted in power steering pump.

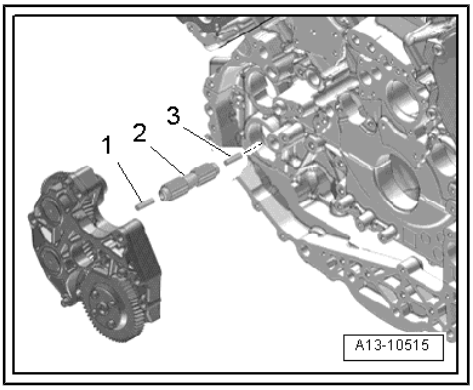

– Fit spur gear drive and tighten bolts -1 ... 5- in diagonal sequence and in stages.
– Tighten drive chain sprocket for auxiliary drives hand-tight.
– Install chain for auxiliary drives ⇒ page 142 .

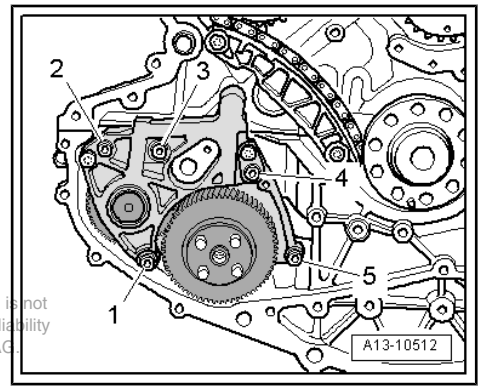

Protected by copyright. Copying for private or commercial purposes, in part or in whole, is not permitted unless authorised by AUDI AG. AUDI AG does not guarantee or accept any liability with respect to the correctness of information in this document. Copyright by AUDI AG.

– Tighten bolt -1- of drive chain sprocket -2- for auxiliary drives.

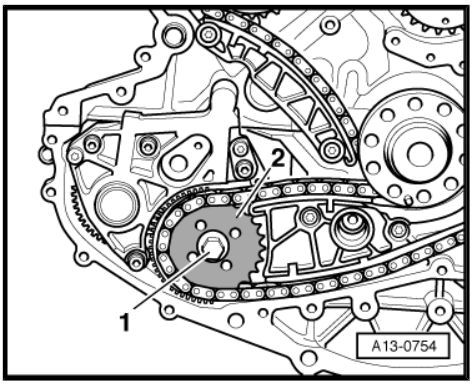

Remaining installation steps are carried out in reverse sequence; note the following:

– Install power steering pump ⇒ Rep. gr. 48 .
– Install timing chain covers ⇒ page 112 .
– Install drive plate ⇒ page 71 .
– Bolt gearbox to engine and install engine/gearbox assembly ⇒ page 40 .
– Fill up with engine oil and check engine oil level ⇒ Maintenance ; Booklet 404 .

Tightening torques

Component	Nm
Bearing cover (front) to cylinder block	9
Bearing cover (rear) to bearing cover (front)	9
Drive chain sprocket for auxiliary drives to shaft	62

2 Removing and installing cylinder head

⇒ “2.1 Cylinder head - exploded view”, page 152
⇒ “2.2 Cylinder head cover - exploded view”, page 154
⇒ “2.3 Removing and installing cylinder head cover”, page 155
⇒ “2.4 Removing and installing cylinder head”, page 156
⇒ “2.5 Checking compression”, page 161

2.1 Cylinder head - exploded view

Note

Illustration shows right-side cylinder head.

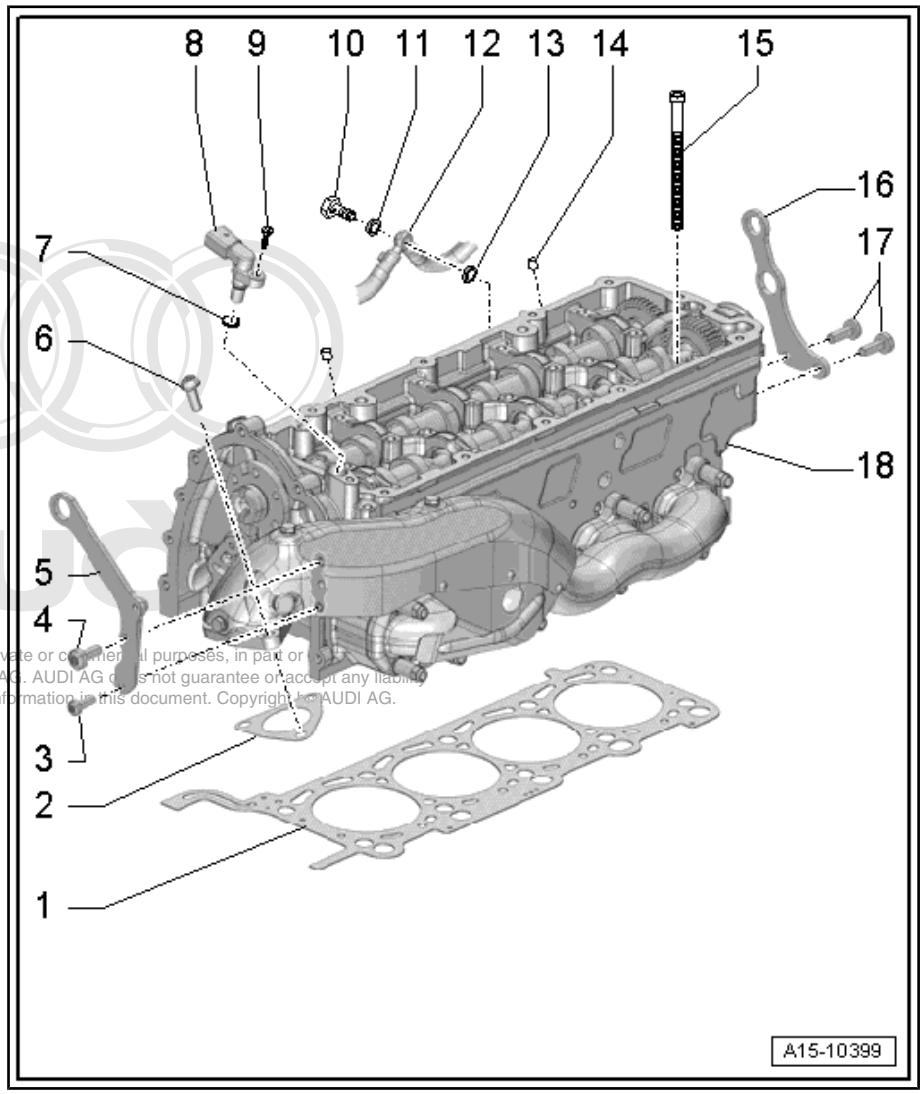

1 - Cylinder head gasket
- ❑ Renewing ⇒ “2.4 Removing and installing cylinder head”, page 156
- ❑ Installation position: Part No. towards cylinder head
- ❑ If renewed, change coolant and engine oil

2 - Gasket
- ❑ Renew

3 - 9 Nm

4 - 23 Nm

5 - Rear engine lifting eye

6 - Bolt
- ❑ Tightening torque ⇒ Item 18 (page 251)

7 - O-ring
- ❑ Renew

8 - Hall sender - G40-

9 - 9 Nm

10 - Banjo bolt, 12 Nm

11 - Seal
- ❑ Renew

12 - Coolant pipe

13 - Seal
- ❑ Renew

14 - Dowel sleeve
- ❑ For intake manifold
- ❑ 2x

15 - Cylinder head bolt
- ❑ Renew

Protected by copyright. Copying for private or commercial purposes, in part or in whole, is not permitted unless authorised by AUDI AG. AUDI AG does not guarantee or accept any liability with respect to the correctness of information in this document. Copyright by AUDI AG.

- ❑ Note correct sequence when loosening ⇒ page 159
- ❑ Note correct sequence when tightening ⇒ page 161

16 - Front engine lifting eye

17 - 23 Nm

18 - Cylinder head

- ❑ To prevent damage to glow plugs, always place cylinder head on a soft foam surface after removal.
- ❑ Removing ⇒ page 156
- ❑ Checking for distortion ⇒ page 153
- ❑ Cylinder heads must not be machined on diesel engines
- ❑ Installing ⇒ page 159
- ❑ If renewed, change coolant and engine oil

Checking cylinder head for distortion

– Use straight edge 500 mm - VAS 6075- and feeler gauge to measure cylinder head for distortion at several points.

• Maximum permissible distortion: 0.1 mm.

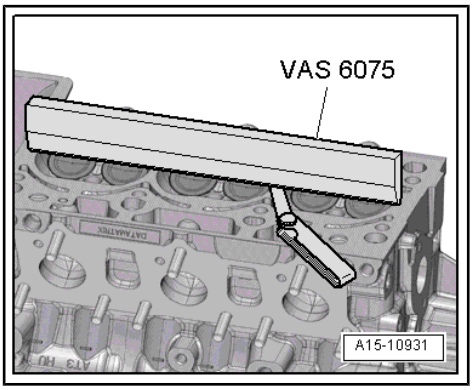

Identification of cylinder head gasket

1 - Holes

2 - Part No.

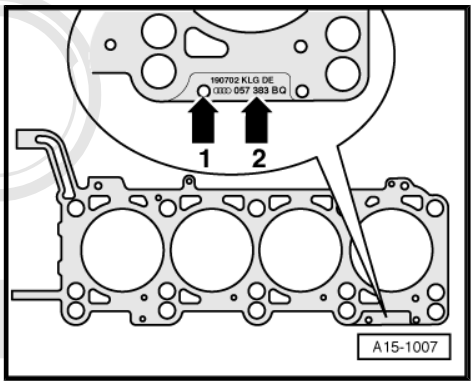

Note

The gaskets for the left and right cylinder heads have different shapes and cannot be interchanged.

Protected by copyright. Copying for private or commercial purposes, in part or in whole, is not permitted unless authorised by AUDI AG. AUDI AG does not guarantee or accept any liability with respect to the correctness of information in this document. Copyright by AUDI AG.

2.2 Cylinder head cover - exploded view

Note

Illustration shows cylinder head cover of cylinder bank (right-side).

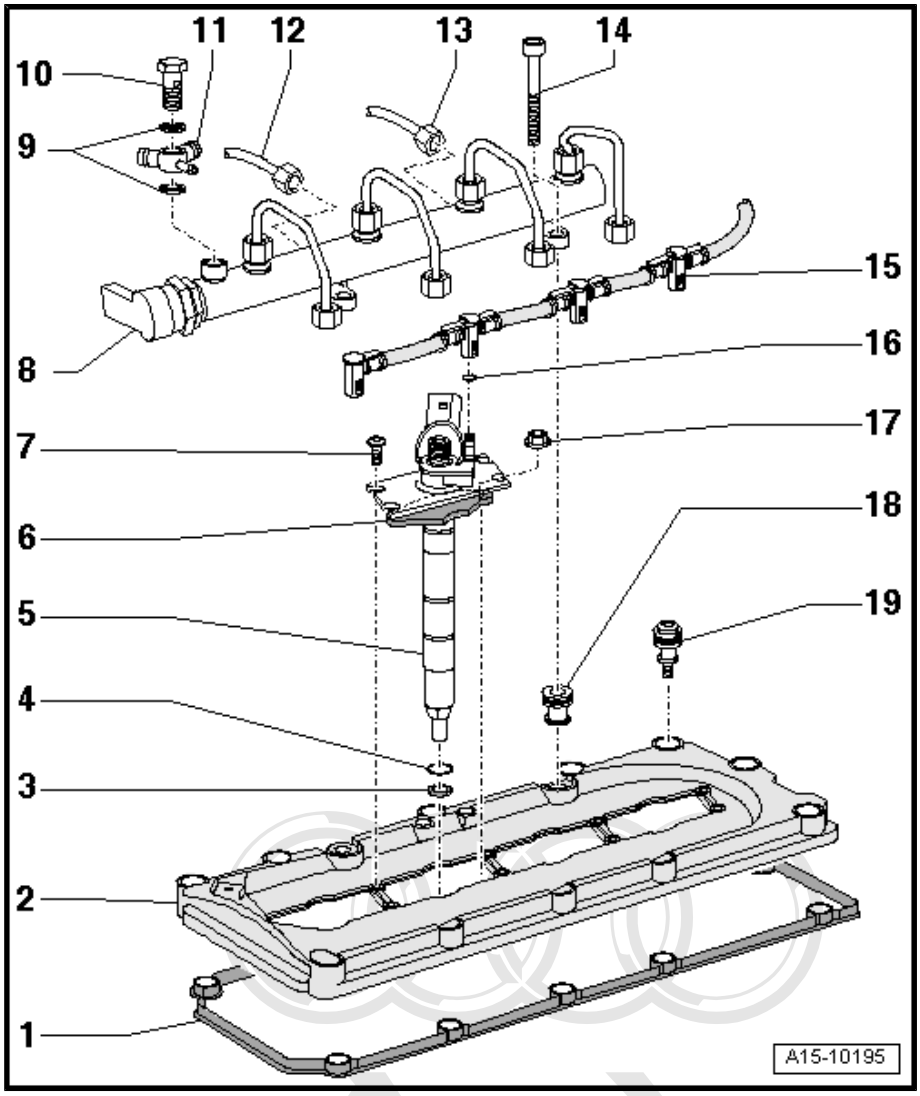

1 - Gasket for cylinder head cover
- ❑ Renew if damaged or leaking

2 - Cylinder head cover
- ❑ Removing and installing ⇒ page 155

3 - Copper seal
- ❑ Renew

4 - O-ring
- ❑ Renew

5 - Injector
- ❑ Observe rules for cleanliness ⇒ page 5
- ❑ Removing and installing ⇒ Rep. gr. 23
- ❑ When an injector is renewed, also renew the high-pressure pipe and clamping piece at the same time

6 - Clamping piece
- ❑ Must be renewed if injector is renewed

7 - 5 Nm

8 - Rail element
- ❑ With high-pressure pipes
- ❑ Observe rules for cleanliness ⇒ page 5
- ❑ Do not attempt to bend high-pressure pipes to a different shape
- ❑ Also renew high-pressure pipe when renewing rail element or injector
- ❑ Tightening high-pressure pipes ⇒ page 156

Protected by copyright. Copying for private or commercial purposes, in part or in whole, is not permitted unless authorised by AUDI AG. AUDI AG does not guarantee or accept any liability with respect to the correctness of information in this document. Copyright by AUDI AG.

9 - Seals
- ❑ Renew

10 - Banjo bolt, 14 Nm

11 - Connecting piece

12 - High-pressure pipe
- ❑ From high-pressure pump
- ❑ Observe rules for cleanliness ⇒ page 5
- ❑ Do not alter shape
- ❑ Also renew high-pressure pipe when renewing rail element or high-pressure pump.
- ❑ Tightening high-pressure pipes ⇒ page 156

13 - High-pressure pipe

- ❑ From rail element on opposite side
- ❑ Observe rules for cleanliness ⇒ page 5
- ❑ Do not alter shape
- ❑ Also renew high-pressure pipe when renewing rail element
- ❑ Tightening high-pressure pipes ⇒ page 156

14 - 22 Nm

15 - Return line

- ❑ Observe rules for cleanliness ⇒ page 5

16 - O-ring

- ❑ Renew

17 - 9 Nm

18 - Sleeve

- ❑ With seal
- ❑ Renew if damaged or leaking

Protected by copyright. Copying for private or commercial purposes, in part or in whole, is not permitted unless authorised by AUDI AG. AUDI AG does not guarantee or accept any liability with respect to the correctness of information in this document. Copyright by AUDI AG.

19 - Special bolt, 8 Nm + 90° ($^1/_4$ turn) further

- ❑ Renew
- ❑ Tighten in stages and in diagonal sequence

2.3 Removing and installing cylinder head cover

Removing

Note

The procedure is described for the cylinder head cover (left-side).

– Remove injectors (piezo injectors) ⇒ Rep. gr. 23 .

– Loosen cylinder head cover bolts -arrows- in diagonal sequence.
– Remove bolts and take off cylinder head cover.

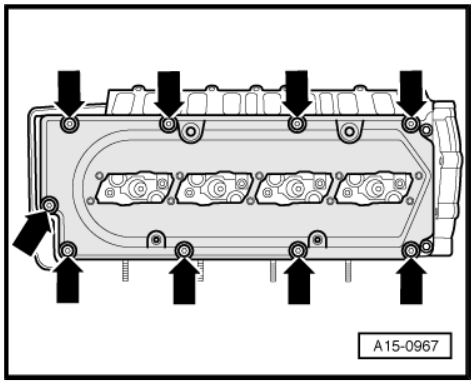

Installing

Note

Renew cylinder head cover gaskets if damaged.

– Tighten cylinder head cover bolts diagonally and in stages.
– Install injectors (piezo injectors) ⇒ Rep. gr. 23 .
– Check fuel system for leaks ⇒ page 5 .

Tightening torques

Component	Nm
Cylinder head cover to cylinder head	8 + 90° 1)2)
• 1) Renew bolts. • 2) 90° = one quarter turn.	

2.4 Removing and installing cylinder head

Removing

– Remove engine ⇒ page 8 .

Note

The engine/gearbox assembly remains on the scissor-type assembly platform - VAS 6131 A- (without detaching the gearbox) when performing the following repairs.

– Remove timing chains from camshafts ⇒ page 129 .
– Remove intake manifold (top section) ⇒ Rep. gr. 23 .

Cylinder head (left-side):

– Remove high-pressure pump ⇒ Rep. gr. 23 .
– Remove coolant hoses -arrows- from connection for exhaust gas recirculation (left-side).
– Remove bolts -1 ... 3- and detach connection for exhaust gas recirculation (left-side).

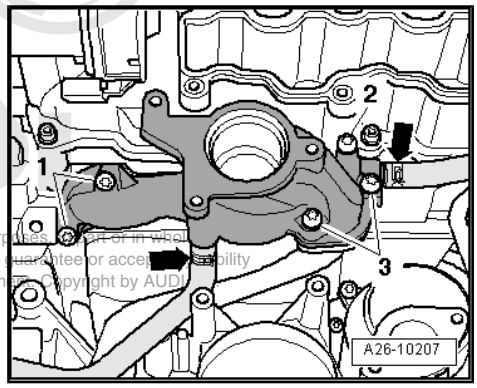

Protected by copyright. Copying for private or commercial purposes, in part or in whole, is not permitted unless authorised by AUDI AG. AUDI AG does not guarantee or accept any liability with respect to the correctness of information in this document. Copyright by AUDI AG.

– Remove bracket for refrigerant line (front) from cylinder head.

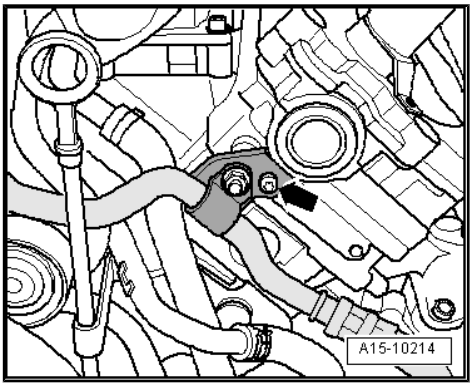

Cylinder head (right-side):

– Unplug electrical connector -1-.

– Remove bolts -arrows- and take off control motor for exhaust gas recirculation - V338- (right-side).

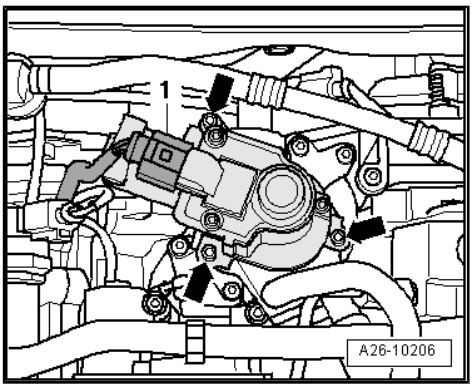

– Unscrew bolt -4- and remove coolant hose/pipe connection.

– Detach coolant hoses -2- and -6-.

– Remove bolts -1-, -3- and -5- and detach hose connection for exhaust gas recirculation (right-side).

Protected by copyright. Copying for private or commercial purposes, in part or in whole, is not permitted unless authorised by AUDI AG. AUDI AG does not guarantee or accept any liability with respect to the correctness of information in this document. Copyright by AUDI AG.

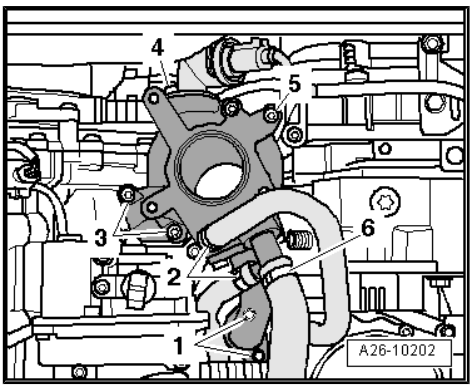

Continuation for both sides:

– Remove cylinder head cover ⇒ page 155 .

– Disconnect coolant line from cylinder head -arrow- (left or right).

– Remove covers from cylinder head located at front left/front right.

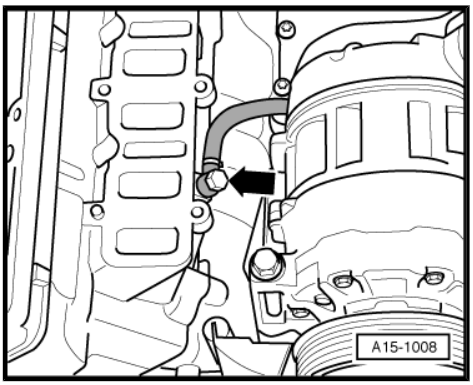

– Remove bolts -arrows- at top of turbocharger (left/right side).

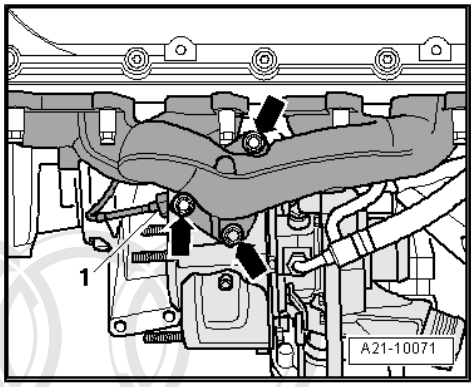

Protected by copyright. Copying for private or commercial purposes, in part or in whole, is not permitted unless authorised by AUDI AG. AUDI AG does not guarantee or accept any liability with respect to the correctness of information in this document. Copyright by AUDI AG.

– Loosen cylinder head bolts in the sequence shown.

– Remove cylinder head bolts and carefully detach cylinder head.

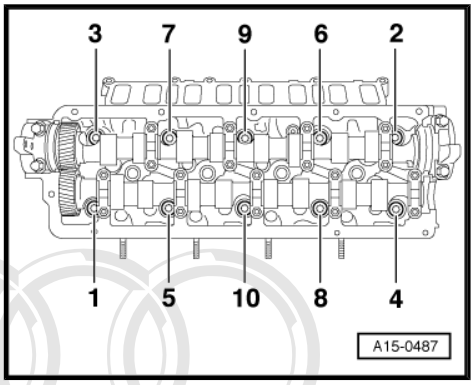

Note

To prevent damage to glow plugs, always place cylinder head on a soft foam surface after removal.

– Detach electrical connectors at glow plugs.

– Remove intake manifold (left or right) ⇒ Rep. gr. 23 .

– Remove exhaust gas recirculation cooler ⇒ page 320 .

Installing

Note

- *The cylinder heads of diesel engines must not be machined.*
- *Renew the cylinder head bolts.*
- *Renew self-locking nuts and bolts when performing assembly work.*
- *Renew bolts which are tightened to a specified angle as well as oil seals and gaskets.*
- *If repairing, carefully remove any remaining gasket material from the cylinder head and cylinder block. Ensure that no long scores or scratches are made on the surfaces.*
- *Carefully remove any remaining emery and abrasive material.*
- *No oil or coolant must be allowed to remain in the blind holes for the cylinder head bolts in the cylinder block.*
- *Do not remove new cylinder head gasket from packaging until it is ready to be fitted.*
- *Handle gasket very carefully. Damage to the silicone coating or the indented area will lead to leaks.*
- *Position cylinder head gasket on dowel sleeves. The word -oben- (top) or the Part No. must face towards cylinder head.*
- *The plastic protectors fitted to protect the open valves should not be removed until the cylinder head is ready to be fitted.*
- *When installing an exchange cylinder head with fitted camshafts, oil the contact surfaces between the roller rocker fingers and cams.*
- *After working on the valve gear, turn the engine carefully at least 2 rotations to ensure that none of the valves make contact when the starter is operated.*
- *Secure all hose connections with the correct type of hose clips (same as original equipment) ⇒ Electronic parts catalogue .*
- *When fitting a new cylinder head or cylinder head gasket, drain off all the old coolant and refill with new coolant.*

Protected by copyright. Copying for private or commercial purposes, in part or in whole, is not permitted unless authorised by AUDI AG. AUDI AG does not guarantee or accept any liability with respect to the correctness of information in this document. Copyright by AUDI AG.

Installation is carried out in the reverse order; note the following:

– Before installing cylinder head, set crankshaft and camshafts to TDC:

• Locking pin - 3242- must be screwed in with engine at TDC position.

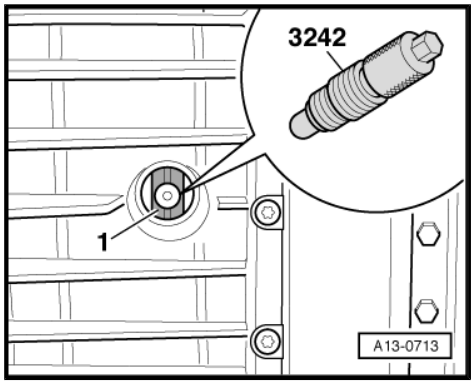

• The camshafts on both cylinder heads must be locked with adjustment pins - T40060- .

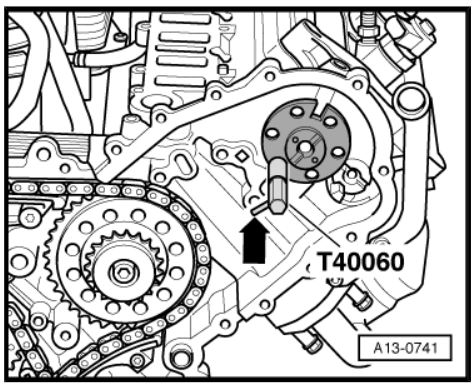

– Note identification markings on cylinder head gasket.

1 - Holes

2 - Part No.

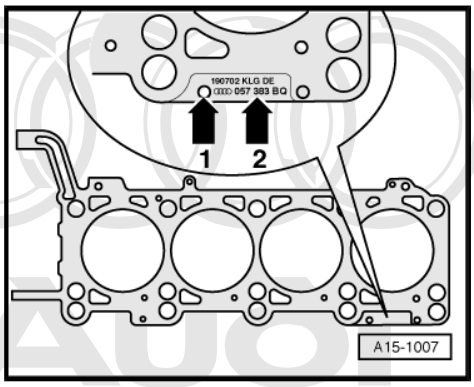

Note

♦ *If the cylinder head gasket or cylinder head have been replaced, select the new cylinder head gasket according to the number of holes on the old gasket.*

♦ *If parts of the crankshaft drive have been renewed, the new cylinder head gasket must be selected by measuring the piston projection at TDC* *⇒ page 103* *.*

♦ *The gaskets for the left and right cylinder heads have different shapes and cannot be interchanged.*

Protected by copyright. Copying for private or commercial purposes, in part or in whole, is not permitted unless authorised by AUDI AG. AUDI AG does not guarantee or accept any liability with respect to the correctness of information in this document. Copyright by AUDI AG.

– Fit cylinder head gasket.

• Pay attention to dowel sleeves -arrows- in cylinder block.

• Check installation position of cylinder head gasket: the word “oben” (top) or the Part No. should face towards the cylinder head.

– Fit cylinder head.

– Screw in new cylinder head bolts until hand-tight.

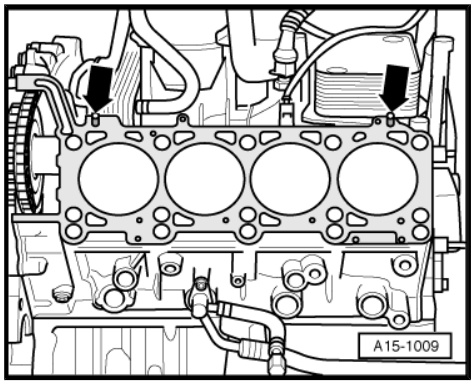

– Tighten cylinder head bolts as follows in the sequence shown:

1. Tighten with torque wrench to 35 Nm.
2. Tighten with torque wrench to 60 Nm.
3. Turn 90° (1/4 turn) further using a rigid wrench.
4. Turn 90° (1/4 turn) further using a rigid wrench.

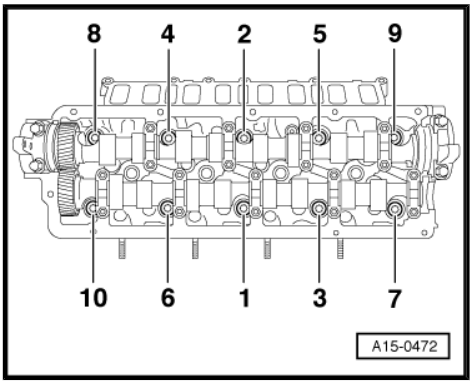

Note

Cylinder head bolts do not have to be torqued down again later after repair work.

– Install cylinder head cover ⇒ page 155 .
– Install high-pressure pump ⇒ Rep. gr. 23 .
– Install toothed belt for high-pressure pump ⇒ Rep. gr. 23 .
– Install control motors for exhaust gas recirculation: left-side ⇒ page 317 , right-side ⇒ page 319 .
– Install intake manifold (top section) ⇒ Rep. gr. 23 .
– Install engine ⇒ page 40 .
– Change engine oil ⇒ Maintenance ; Booklet 404 .
– Fill cooling system with fresh coolant ⇒ page 216 .

Tightening torques

Component		Nm
Turbocharger to exhaust manifold		20 + 90° 1)2)3)
Connection for exhaust gas recirculation to:	Cylinder head	9
	Connecting pipe	9
Coolant hose/pipe connection to connection for exhaust gas recirculation		9
Coolant line to cylinder head		14

- 1) Renew nuts.
- 2) 90° = one quarter turn.
- 3) Coat with high-temperature paste; for high-temperature paste refer to ⇒ Electronic parts catalogue

2.5 Checking compression

Special tools and workshop equipment required

♦ U/J extension and socket, 10 mm - 3220-

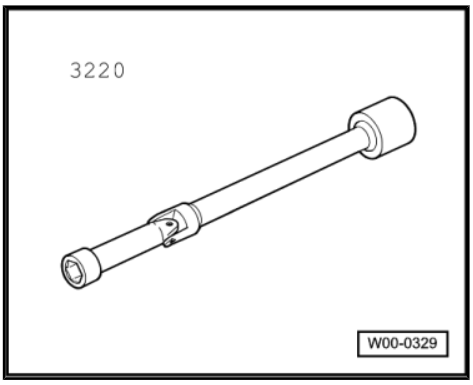

Protected by copyright. Copying for private or commercial purposes, in part or in whole, is not permitted unless authorised by AUDI AG. AUDI AG does not guarantee or accept any liability with respect to the correctness of information in this document. Copyright by AUDI AG.

♦ Compression tester - V.A.G 1763- with adapter - V.A.G 1763/8-

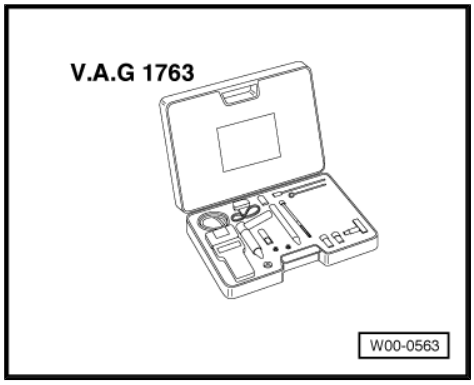

Test requirements

- Engine oil temperature approx. 80 °C
- Battery voltage at least 12.5 V.

Test sequence

Protected by copyright. Copying for private or commercial purposes, in part or in whole, is not permitted unless authorised by AUDI AG. AUDI AG does not guarantee or accept any liability with respect to the correctness of information in this document. Copyright by AUDI AG.

Note

All cable ties which are released or cut open when removing must be refitted in the same position when installing.

– Carefully pull engine cover panel off four retaining pins one after the other -arrows-.

– Detach electrical connectors at glow plugs.

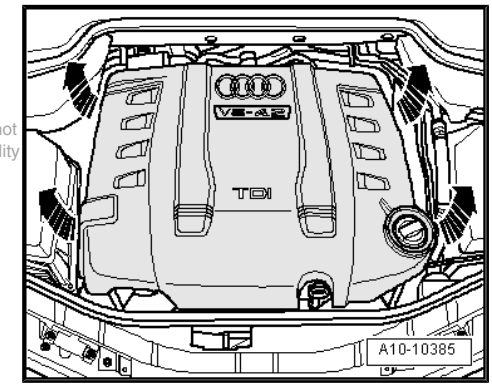

– Detach electrical connector -arrow- for high-pressure pump.

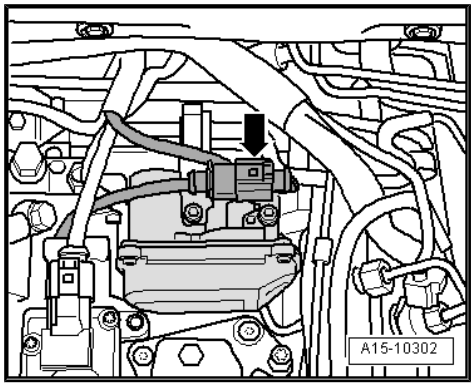

Note

To improve access to the glow plugs on cylinders 4 and 8, push intake manifold flap motors on left and right slightly to the side.

– Unscrew bolts -arrows- on intake manifold (left and right) and push intake manifold flap motor - V157- / intake manifold flap motor 2 - V275- slightly to the side. The linkage remains connected.

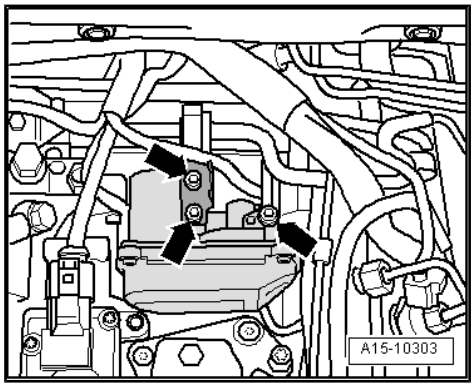

– Remove all glow plugs using U/J extension and socket, 10 mm - 3220- .

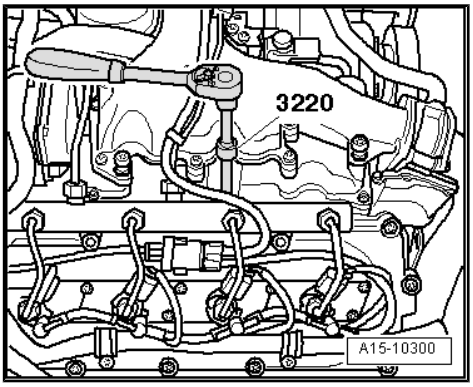

– Screw in adapter - V.A.G 1763/8- in place of glow plugs.
– Test the compression pressure with the compression tester - V.A.G 1763- .

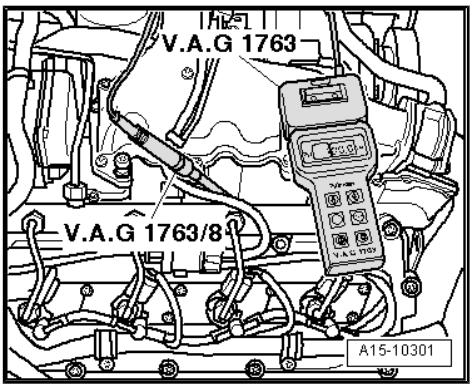

Note

Using the compression tester ⇒ operating instructions .

– Have a 2nd mechanic operate starter until tester shows no further pressure increase.

Compression pressure	bar
When new	28 … 33
Wear limit	21
Difference between cylinders	5 (maximum)

Installation is carried out in the reverse order; note the following:

– Install glow plugs ⇒ Rep. gr. 28 .
– Erase any entries in event memory resulting from testing ⇒ Vehicle diagnostic tester.

Tightening torque

Component	Nm
Intake manifold flap motor to intake manifold (bottom section)	9

Protected by copyright. Copying for private or commercial purposes, in part or in whole, is not permitted unless authorised by AUDI AG. AUDI AG does not guarantee or accept any liability with respect to the correctness of information in this document. Copyright by AUDI AG.

3 Servicing valve gear

⇒ “3.1 Valve gear - exploded view”, page 164

⇒ “3.2 Measuring axial clearance of camshafts”, page 166

⇒ “3.3 Measuring radial clearance of camshafts”, page 167

⇒ “3.4 Removing and installing camshafts”, page 167

⇒ “3.5 Renewing valve stem oil seals with cylinder head installed”, page 173

⇒ “3.6 Renewing valve stem oil seals with cylinder head removed”, page 176

⇒ “3.7 Checking hydraulic valve compensation elements”, page 179

⇒ “3.8 Valve dimensions”, page 180

⇒ “3.9 Machining valve seats”, page 180

⇒ “3.10 Checking valve guides”, page 180

⇒ “3.11 Checking valves”, page 181

Protected by copyright. Copying for private or commercial purposes, in part or in whole, is not permitted unless authorised by AUDI AG. AUDI AG does not guarantee or accept any liability with respect to the correctness of information in this document. Copyright by AUDI AG.

3.1 Valve gear - exploded view

Note

- *After working on the valve gear, turn the engine carefully at least 2 rotations by hand in direction of engine rotation to ensure that none of the valves make contact when the starter is operated.*
- *The following illustrations show the cylinder head (right-side).*

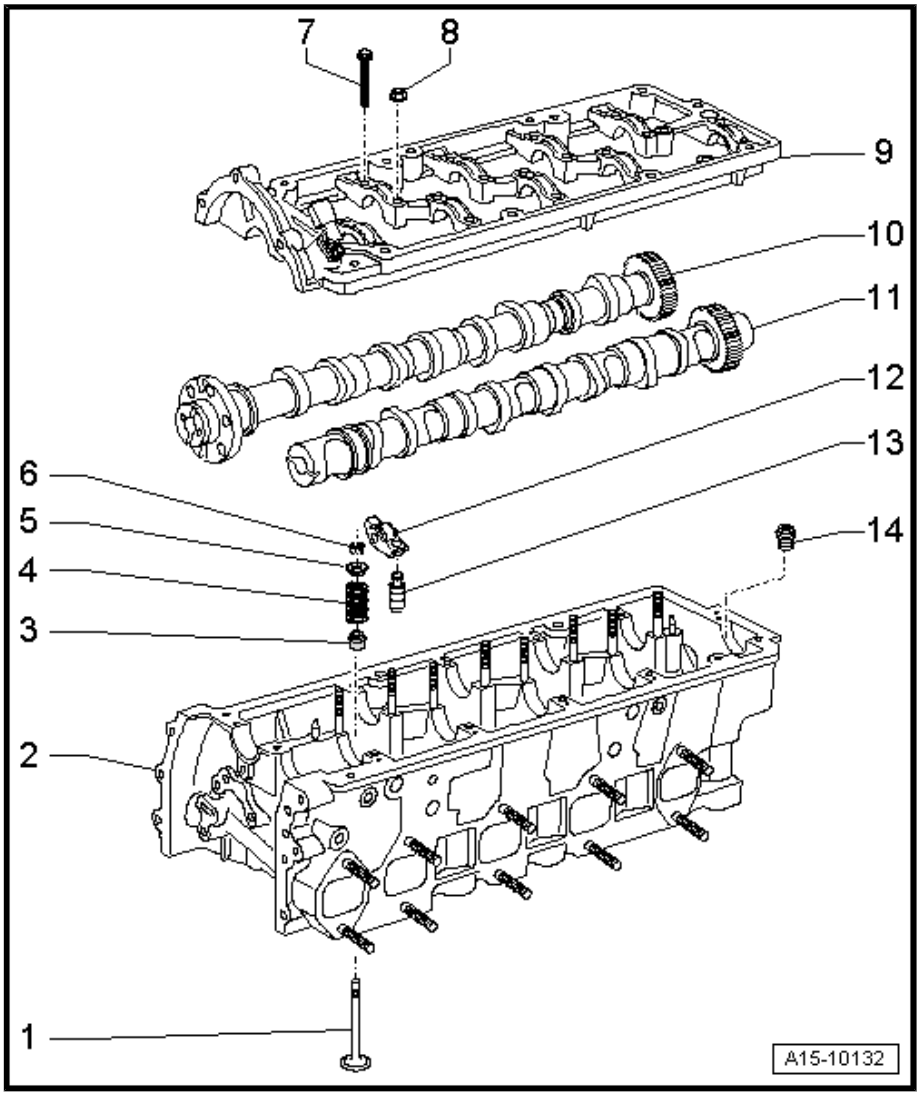

1 - Valve

- ❑ Do not machine, only grinding-in is permitted
- ❑ Mark installation position for re-installation
- ❑ Valve dimensions ⇒ page 180
- ❑ Checking valve guides ⇒ page 180

2 - Cylinder head

- ❑ See note ⇒ page 164
- ❑ Checking valve guides ⇒ page 180
- ❑ Machining valve seats ⇒ page 180

3 - Valve stem oil seal

- ❑ Renewing with cylinder head installed ⇒ page 173
- ❑ Renewing with cylinder head removed ⇒ page 176

4 - Valve spring

5 - Valve spring plate

6 - Valve cotters

7 - 10 Nm

- ❑ Observe correct tightening sequence ⇒ page 173

8 - 10 Nm

- ❑ Observe correct tightening sequence ⇒ page 173

9 - Retaining frame

- ❑ With integrated camshaft bearings
- ❑ Removing and installing ⇒ "3.4 Removing and installing camshafts", page 167

10 - Inlet camshaft

- ❑ Removing and installing ⇒ page 167
- ❑ Measuring axial clearance ⇒ page 166
- ❑ Measuring radial clearance ⇒ page 167
- ❑ Runout: max. 0.01 mm

11 - Exhaust camshaft

- ❑ Removing and installing ⇒ page 167
- ❑ Measuring axial clearance ⇒ page 166
- ❑ Measuring radial clearance ⇒ page 167
- ❑ Runout: max. 0.01 mm

Reproduction of this document or any part thereof for private or commercial purposes, in part or in whole, is not permitted unless authorised by AUDI AG. AUDI AG does not guarantee or accept any liability with respect to the correctness of information in this document. Copyright by AUDI AG.

12 - Roller rocker finger

- ❑ Mark installation position with a coloured pen
- ❑ Do not interchange
- ❑ Check roller bearings for ease of movement
- ❑ Lubricate contact surface

13 - Hydraulic valve compensation element

- ❑ Mark installation position with a coloured pen
- ❑ Checking ⇒ page 179
- ❑ Lubricate contact surfaces before installing

14 - Not fitted

3.2 Measuring axial clearance of camshafts

This document is copyright. Copying for private or commercial purposes, in part or in whole, is not permitted unless authorised by AUDI AG. AUDI AG does not guarantee or accept any liability with respect to the correctness of information in this document. Copyright by AUDI AG.

Special tools and workshop equipment required

- ♦ Universal dial gauge bracket - VW 387-

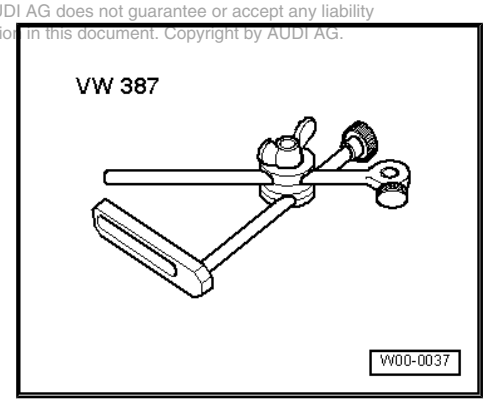

- ♦ Dial gauge - VAS 6079-

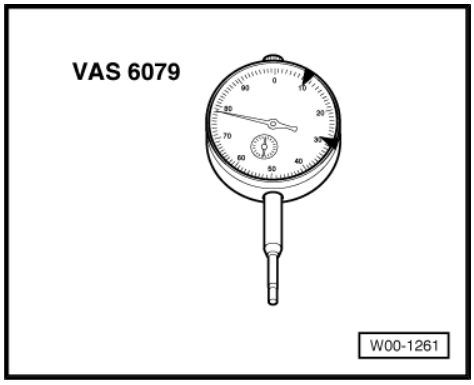

Procedure

– Remove retaining frame
⇒ “3.4 Removing and installing camshafts”, page 167 .

– Secure dial gauge - VAS 6079- with universal dial gauge bracket - VW 387- to retaining frame as shown in illustrations.

Axial clearance (inlet camshaft):

- Specification: 0.03 … 0.06 mm.
- Wear limit: 0.12 mm.

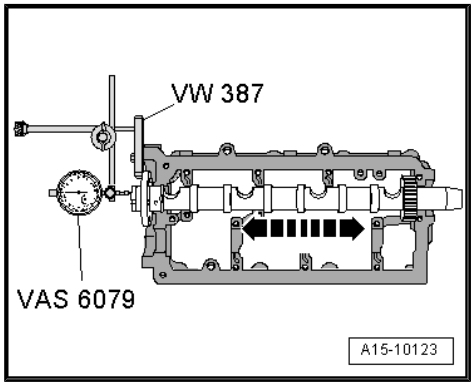

Axial clearance (exhaust camshaft):

- Specification: 0.03 … 0.06 mm.
- Wear limit: 0.12 mm.

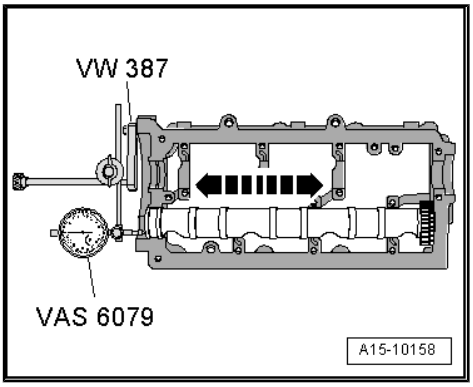

3.3 Measuring radial clearance of camshafts

Special tools and workshop equipment required

♦ Plastigage

Procedure

– Remove roller rocker fingers
⇒ “3.4 Removing and installing camshafts”, page 167 .

– Clean bearings and bearing journals.

– Place a length of Plastigage corresponding to the width of the bearing on the bearing journal or bearing shell to be measured.

- The Plastigage must be positioned in the centre of the bearing.

– Fit retaining frame and tighten to 10 Nm without rotating camshafts ⇒ page 173 .

– Remove retaining frame again.

– Compare width of Plastigage with measurement scale.

Radial clearance:

- New: 0.035 ... 0.085 mm.
- Wear limit: 0.1 mm.

3.4 Removing and installing camshafts

Protected by copyright. Copying for private or commercial purposes, in part or in whole, is not permitted unless authorised by AUDI AG. AUDI AG does not guarantee or accept any liability with respect to the correctness of information in this document. Copyright by AUDI AG.

Special tools and workshop equipment required

- Camshaft fitting tool - T40094-
- Camshaft fitting tool - T40095-
- Camshaft fitting tool - T40096-
- Electric drill with plastic brush attachment
- Safety goggles
- Sealant ⇒ Electronic parts catalogue

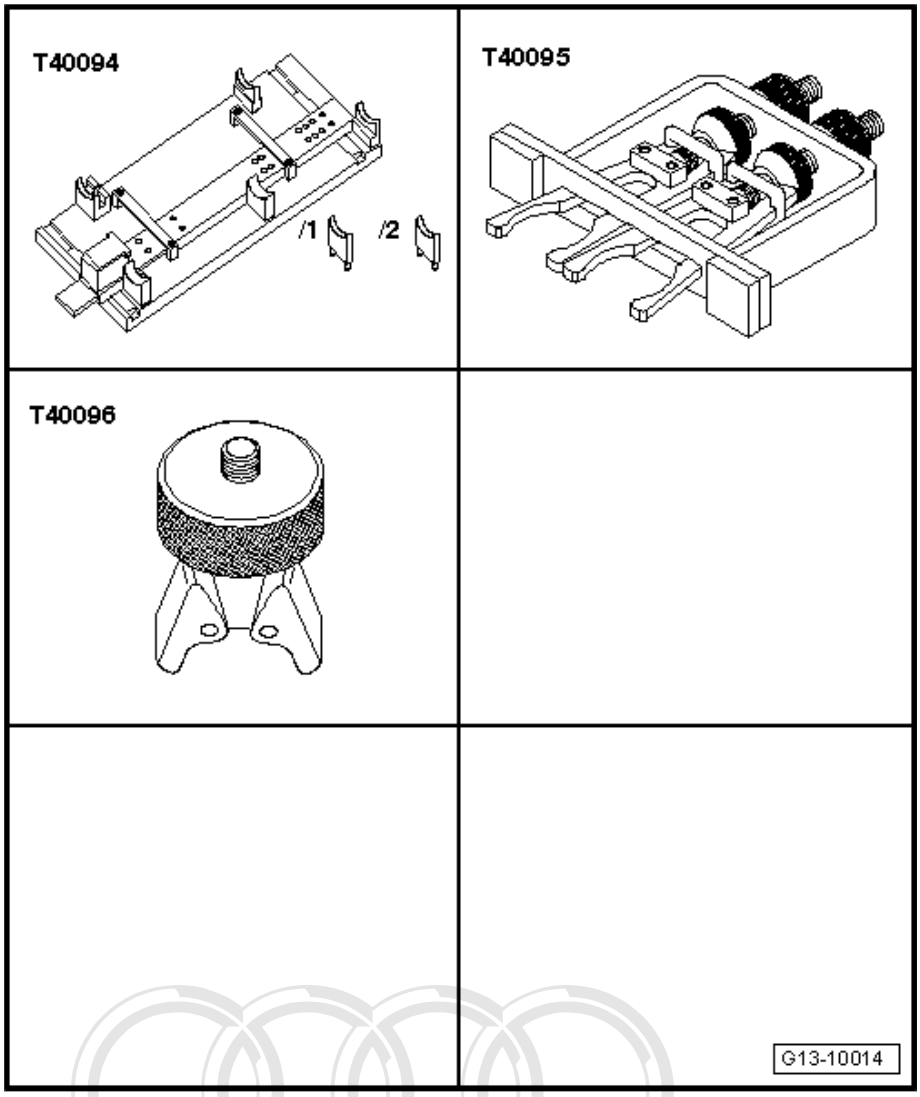

Protected by copyright. Copying for private or commercial purposes, in part or in whole, is not permitted unless authorised by AUDI AG. AUDI AG does not guarantee or accept any liability with respect to the correctness of information in this document. Copyright by AUDI AG.

Removing

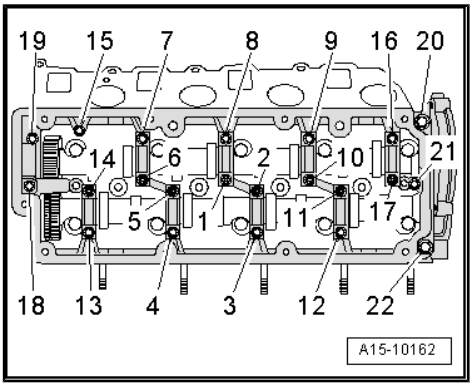

- Remove engine ⇒ page 8 .
- Remove camshaft timing chains ⇒ page 129 .
- Remove relevant cylinder head cover ⇒ page 155 .
- Remove engine lifting eye.
- Unscrew retaining frame bolts and nuts in the sequence -22 ... 1-.

Note

Make sure you do not damage roller rocker fingers and compensation elements when removing camshafts.

- Carefully remove retaining frame and camshafts.

Installing

Caution

The camshafts MUST be installed using the camshaft fitting tool - T40094- as described in the following, as the thrust bearings in the retaining frame would otherwise be destroyed. The cylinder head would then have to be renewed.

WARNING

Wear safety goggles.

- Remove sealant residue from cylinder head -1- and retaining frame using a rotating plastic brush or similar.

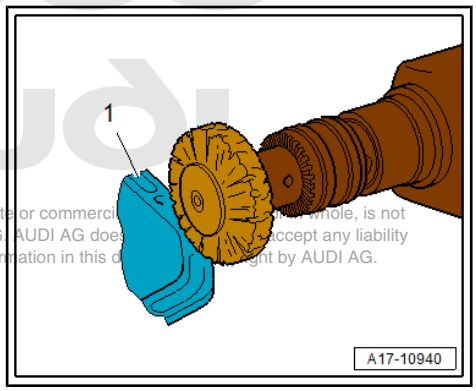

Caution

Make sure that no sealant residue gets into the cylinder head or the bearings.

Protected by copyright. Copying for private or commerci whole, is not permitted unless authorised by AUDI AG. AUDI AG does accept any liability with respect to the correctness of information in this d ght by AUDI AG.

- Clean sealing surfaces; they must be free of oil and grease.

Cylinder head (left-side):

– Lubricate running surfaces of camshafts.

Set up camshaft fitting tool - T40094- as follows:

– Insert support -T40094/1- in position -G-.

– Insert support -T40094/2- in position -A-.

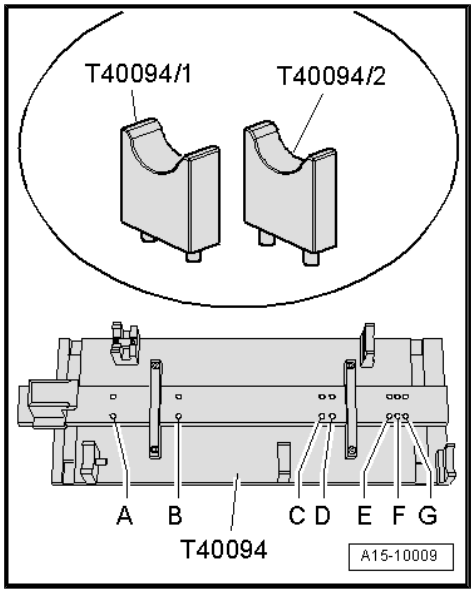

– Place exhaust camshaft -1- in support -T40094/1- and -T40094/2- .

– Turn camshaft in such a way that it can be locked in TDC position using locking device -arrow-.

– Place camshaft fitting tool - T40096- on teeth of exhaust camshaft in such a way that the two arms of the tool engage on the two halves of the gear (one in each half, as shown in illustration).

– Tighten the clamping tool using the knurled wheel so that the faces of the gear teeth are in alignment.

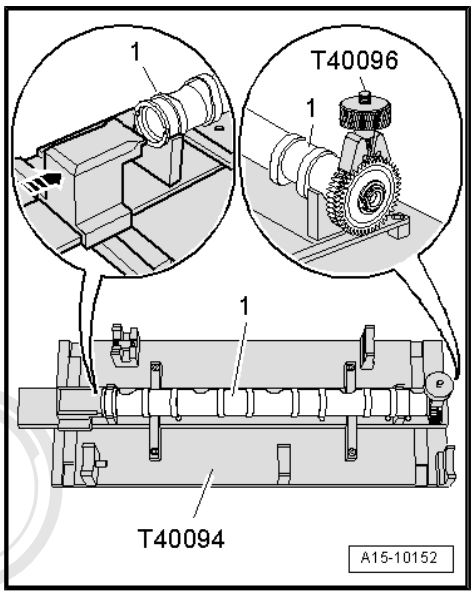

– Place inlet camshaft -2- in camshaft fitting tool - T40094- .

• The locating pin -3- must engage in the slot on the camshaft.

– Slide exhaust camshaft -1- towards inlet camshaft until gear teeth engage.

Protected by copyright. Copying for private or commercial purposes, in part or in whole, is not permitted unless authorised by AUDI AG. AUDI AG does not guarantee or accept any liability with respect to the correctness of information in this document. Copyright by AUDI AG.

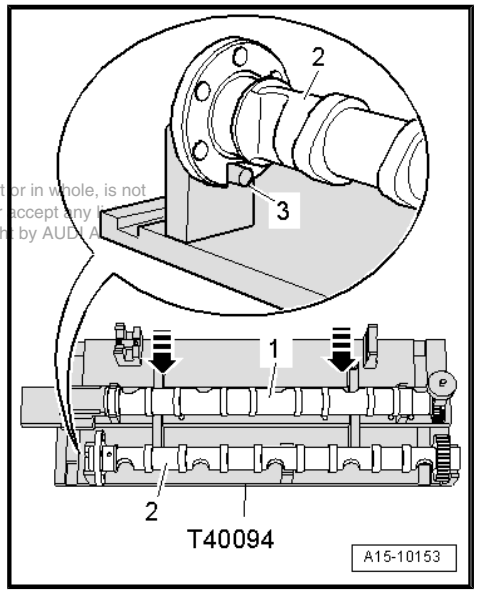

Cylinder head (right-side):

– Lubricate running surfaces of camshafts.
– Insert support -T40094/1- in position -E-.
– Insert support -T40094/2- in position -B-.

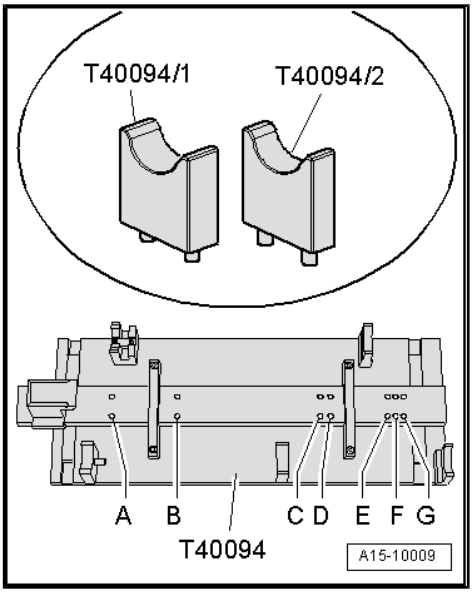

– Place exhaust camshaft -1- in support -T40094/1- and -T40094/2- .
– Turn camshaft in such a way that it can be locked in TDC position using locking device -arrow-.

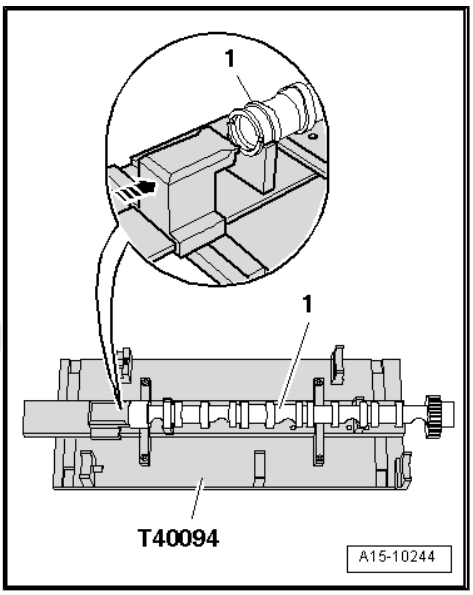

Protected by copyright. Copying for private or commercial purposes, in part or in whole, is not permitted unless authorised by AUDI AG. AUDI AG does not guarantee or accept any liability with respect to the correctness of information in this document. Copyright by AUDI AG.

– Place inlet camshaft -2- in camshaft fitting tool - T40094- .
• The locating pin -3- must engage in the slot on the camshaft.
– Place camshaft fitting tool - T40096- on teeth of inlet camshaft in such a way that the two arms of the tool engage on the two halves of the gear (one in each half, as shown in illustration).
– Tighten the clamping tool using the knurled wheel so that the faces of the gear teeth are in alignment.
– Slide exhaust camshaft -1- towards inlet camshaft until gear teeth engage.

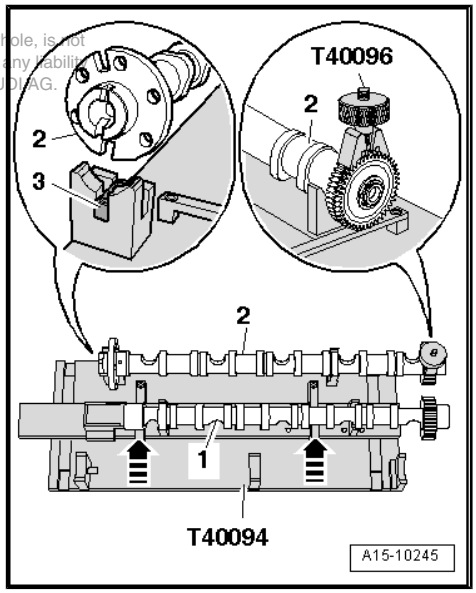

Continuation for both sides:

– Fit retaining frame -1- onto camshafts.

• All camshaft bearings must be seated on the camshafts.

– Attach camshaft fitting tool - T40095- to camshafts (align arms of bracket as required and tighten knurled nuts).

• Note the different shapes for inlet and exhaust camshaft.

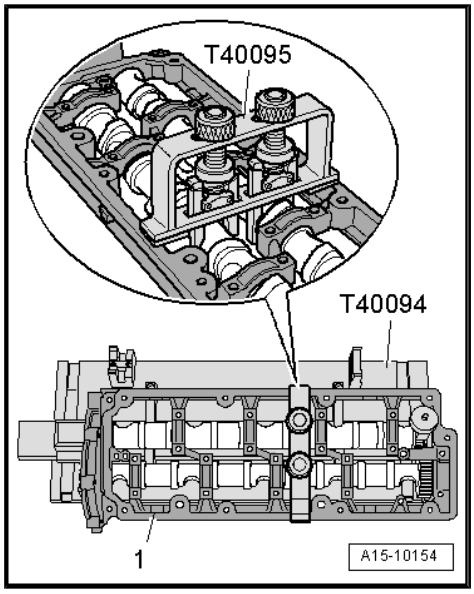

Note

Note the use-by date of the sealant.

– Cut off tube nozzle at front marking (diameter of nozzle approx. 1.5 mm).

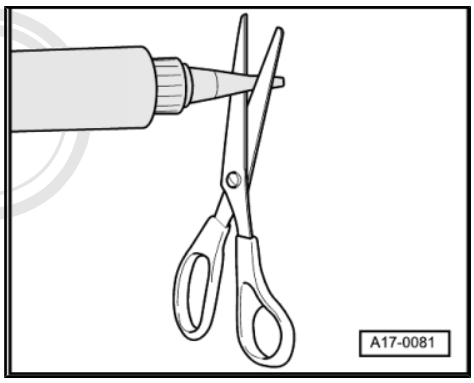

Protected by copyright. Copying for private or commercial purposes, in part or in whole, is not permitted unless authorised by AUDI AG. AUDI AG does not guarantee or accept any liability with respect to the correctness of information in this document. Copyright by AUDI AG.

Note

The retaining frame is shown without camshafts for illustration purposes.

– Turn retaining frame upside down.

– Apply the beads of sealant -arrows- onto the clean sealing surfaces of the retaining frame as illustrated.

• The grooves -arrows- on the sealing surface must be completely filled with sealant.

• The beads of sealant must project 1.5 … 2.0 mm above the sealing surface.

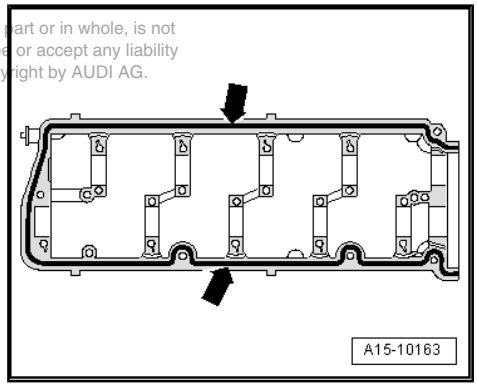

Note

The sealant beads must not be thicker than specified, otherwise excess sealant could enter the camshaft bearings.

– Ensure that all roller rocker fingers contact the valve ends and compensation elements correctly.

– Fit retaining frame together with both camshafts and camshaft fitting tool - T40095- onto cylinder head immediately.

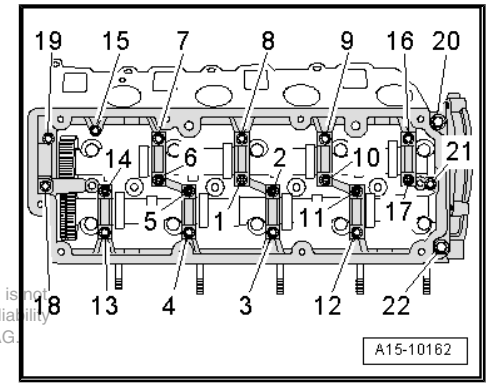

Note

- ♦ *The retaining frame should be fitted and secured without delay, as the sealant starts hardening immediately.*
- ♦ *After installing the retaining frame, wait about 30 minutes for the sealant to dry.*

Protected by copyright. Copying for private or commercial purposes, in part or in whole, is not permitted unless authorised by AUDI AG. AUDI AG does not guarantee or accept any liability with respect to the correctness of information in this document. Copyright by AUDI AG.

– Tighten retaining frame bolts in the sequence -1 ... 22- evenly, initially only hand-tight.

• The retaining frame should make contact with the cylinder head over the full surface.

– Tighten retaining frame bolts to final torque in the sequence -1 ... 22-.

– Remove camshaft fitting tool - T40095- and camshaft fitting tool - T40096- .

Remaining installation steps are carried out in reverse sequence; note the following:

Note

After working on the valve gear, turn the engine carefully at least 2 rotations by hand to ensure that none of the valves make contact when the starter is operated.

– Install cylinder head cover ⇒ page 155 .

– Install camshaft timing chains ⇒ page 129 .

– Install engine ⇒ page 40 .

Tightening torque

Component	Nm
Retaining frame to cylinder head	10

3.5 Renewing valve stem oil seals with cylinder head installed

Special tools and workshop equipment required

- U/J extension and socket, 10 mm - 3220-
- Valve stem seal puller - 3364-
- Valve stem seal fitting tool - 3365-
- Removal and installing device for valve cotters - VAS 5161 A- with guide plate - VAS 5161/24- and knurled spacer ring -VAS 5161/24-1-

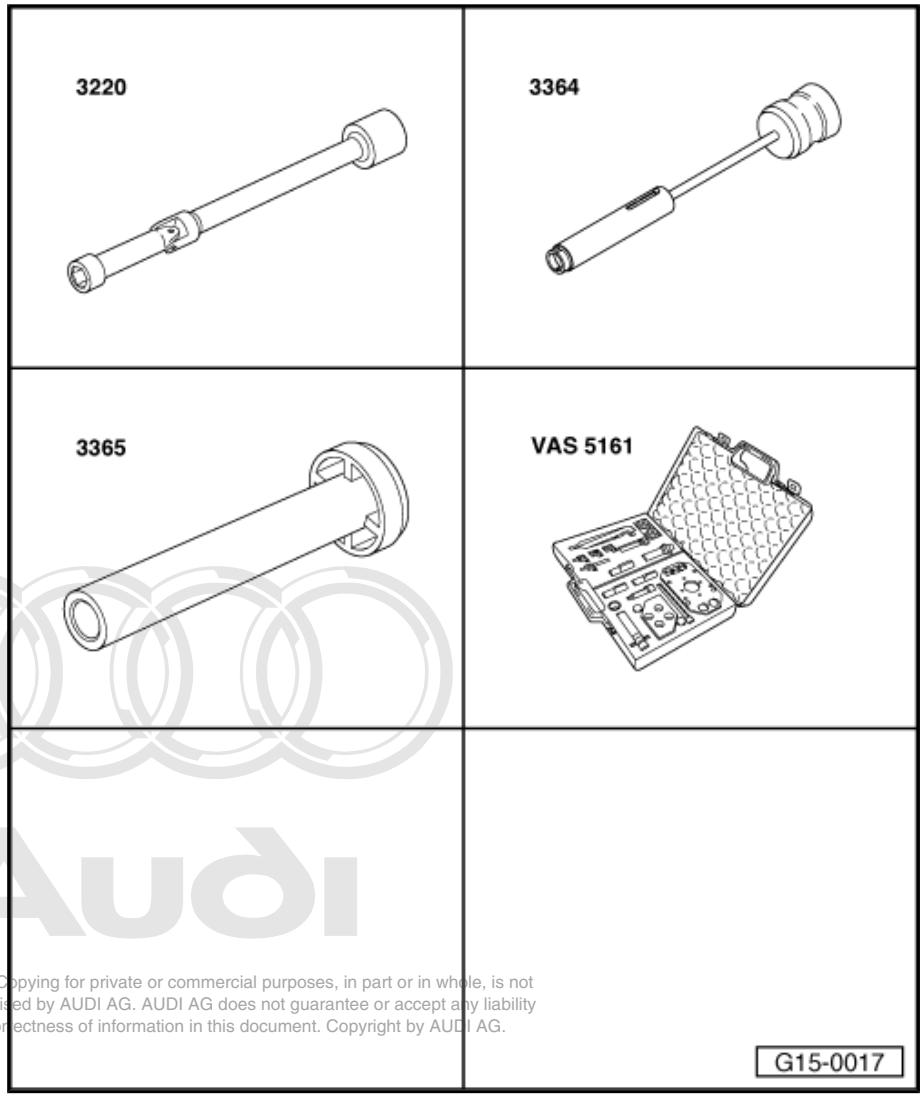

Protected by copyright. Copying for private or commercial purposes, in part or in whole, is not permitted unless authorised by AUDI AG. AUDI AG does not guarantee or accept any liability with respect to the correctness of information in this document. Copyright by AUDI AG.

Procedure

- Remove camshafts ⇒ page 167 .
- Mark fitting location of roller rocker fingers for re-installation and remove.
- Detach electrical connectors at glow plugs.
- Remove all glow plugs using U/J extension and socket, 10 mm - 3220- .
- Fit guide plate -VAS 5161/24- onto cylinder head.
- Secure guide plate using knurled screws -VAS 5161/12- .
- Insert punch -VAS 5161/3- into guide plate and knock sticking valve cotters loose using a plastic hammer.

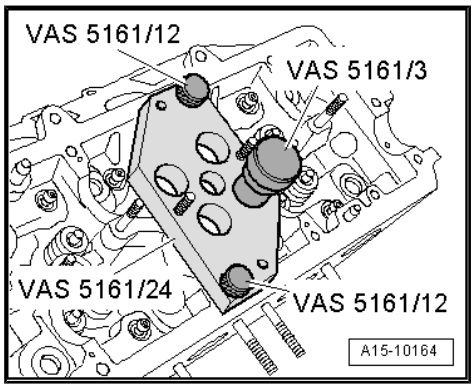

– Screw sealing pin -VAS 5161/10- into guide plate.
– Screw adapter -VAS 5161/11- hand-tight into the glow plug thread of the relevant cylinder.

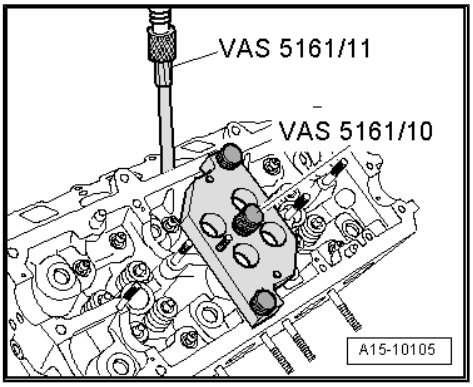

– Screw snap-in device -VAS 5161/6- with engaging fork -VAS 5161/5- into guide plate.
– Slide knurled spacer ring -VAS 5161/24-1- onto assembly cartridge -VAS 5161/8- .
– Connect adapter to compressed air line using a commercially available connection piece, and apply constant air pressure.
• Minimum pressure: 6 bar
– Hook pressure fork -VAS 5161/2- into snap-in device and press assembly cartridge downwards.
– At the same time, turn knurled screw of assembly cartridge clockwise until tips engage in valve cotters.
– Move knurled screw back and forth slightly; the valve cotters are thus forced apart and taken up by the assembly cartridge.
– Release pressure fork.
– Take out assembly cartridge with knurled spacer ring, valve spring plate and valve spring.

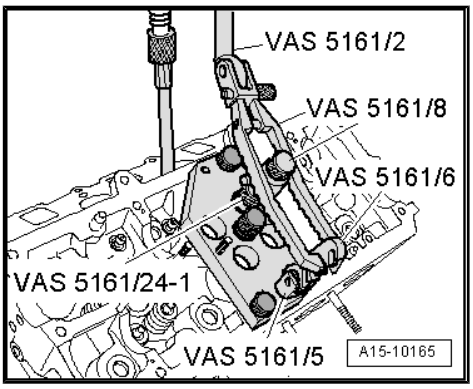

– Remove valve stem oil seals using the valve stem seal puller - 3364- .

Protected by copyright. Copying for private or commercial purposes, in part or in whole, is not permitted unless authorised by AUDI AG. AUDI AG does not guarantee or accept any liability with respect to the correctness of information in this document. Copyright by AUDI AG.

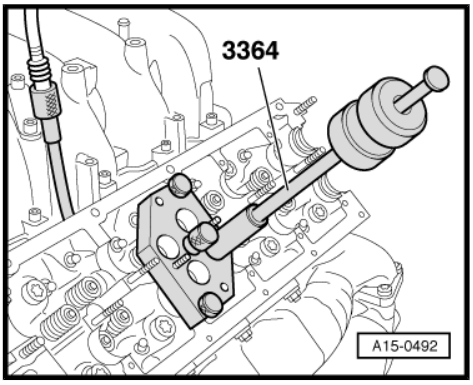

Note

A plastic sleeve -A- is included with the new valve stem oil seals.

– Fit plastic sleeve -A- onto the valve stem to prevent damage to the new valve stem oil seal -B-.
– Lightly lubricate sealing lip of valve stem oil seal.
– Slip valve stem oil seal over plastic sleeve.
– Carefully press valve stem oil seal onto valve guide using valve stem seal fitting tool - 3365- .
– Remove plastic sleeve.

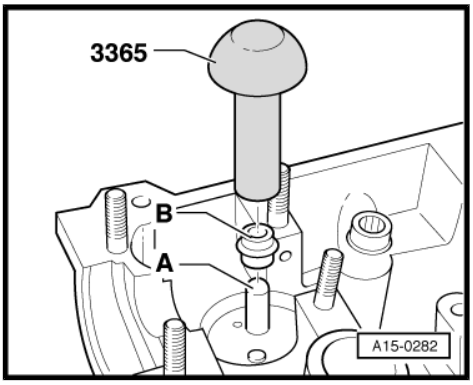

– If valve cotters had been removed from assembly cartridge they must first be inserted in insertion device -VAS 5161/18- .

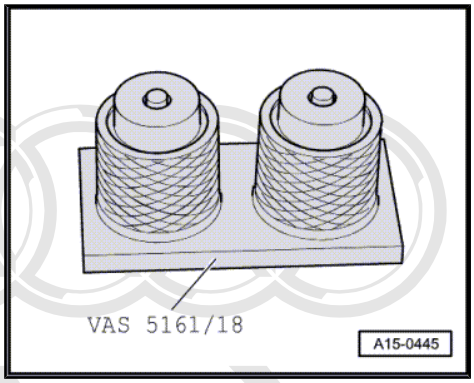

Note

Larger diameter of valve cotters faces upwards.

– Press assembly cartridge onto insertion device from above and take up valve cotters.

– Re-insert assembly cartridge -VAS 5161/8- into guide plate.

– Push pressure fork down and pull knurled screw upwards, while turning screw in both directions – this will insert the valve cotters.

– Release pressure fork with knurled screw still in pulled position.

– Repeat procedure for each valve.

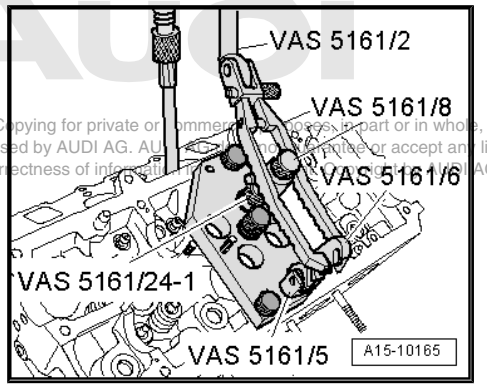

Protected by copyright. Copying for private or commercial purposes, in part or in whole, is not permitted unless authorised by AUDI AG. AUDI AG does not make any representation or accept any liability with respect to the correctness of information. Copyright © 2013 AUDI AG.

Assembling

Installation is carried out in the reverse order; note the following:

– Ensure that all roller rocker fingers make contact with the ends of the valve stems correctly and are clipped onto their respective hydraulic compensation elements.

– Install glow plugs ⇒ Rep. gr. 28 .

– Install camshafts ⇒ page 167 .

3.6 Renewing valve stem oil seals with cylinder head removed

Special tools and workshop equipment required

- Valve stem seal puller - 3364-
- Valve stem seal fitting tool - 3365-
- Removal and installation device for valve cotters - VAS 5161 A-
- Engine and gearbox support - VAS 6095-
- Cylinder head tensioning device - VAS 6419-

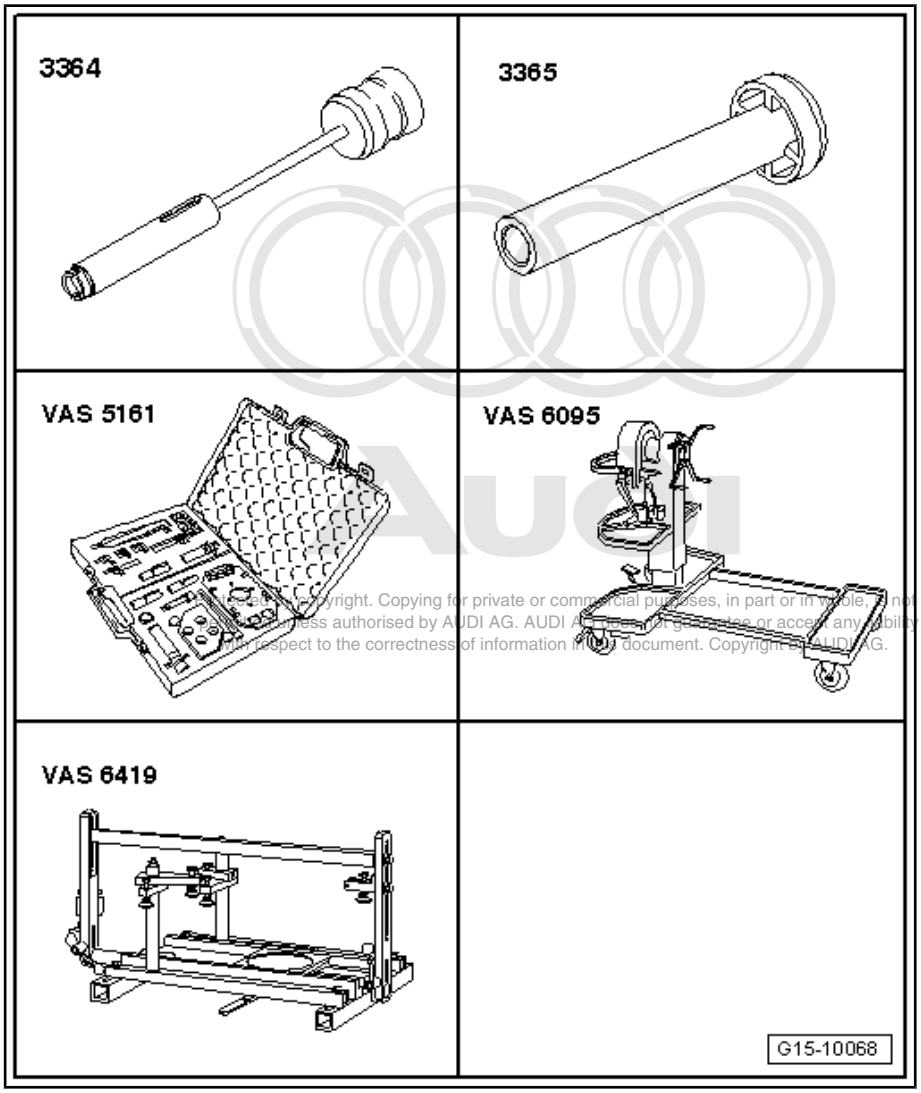

Copyright. Copying for private or commercial purposes, in part or in whole, is not permitted unless authorised by AUDI AG. AUDI AG does not guarantee or accept any liability with respect to the correctness of information in this document. Copyright by AUDI AG.

Procedure

– Remove camshafts ⇒ page 167 .

– Mark fitting location of roller rocker fingers for re-installation and remove.

– Insert cylinder head tensioning device - VAS 6419- into engine and gearbox support - VAS 6095- .

– Secure cylinder head in cylinder head tensioning device, as shown in illustration.

– Connect cylinder head tensioning device to compressed air.

– Using lever -arrow-, slide air pad under combustion chamber where valve stem oil seal is to be removed.

– Apply just enough compressed air to bring air pad into contact with valve heads.

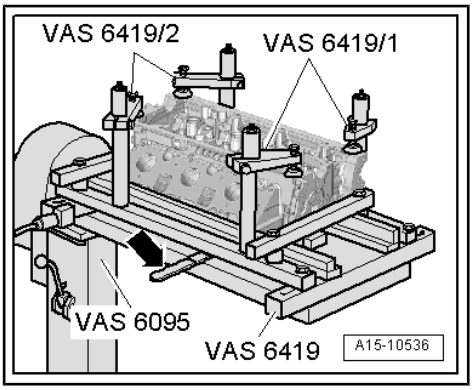

– Fit guide plate -VAS 5161/24- onto cylinder head.
– Secure guide plate using knurled screws -VAS 5161/12- .
– Insert punch -VAS 5161/3- into guide plate and knock sticking valve cotters loose using a plastic hammer.

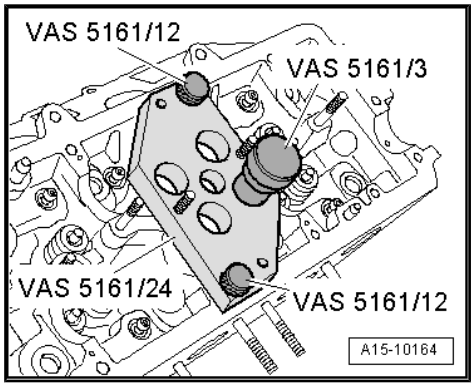

– Screw snap-in device -VAS 5161/6- with engaging fork -VAS 5161/5- into guide plate.
– Slide knurled spacer ring -VAS 5161/24-1- onto assembly cartridge -VAS 5161/8- .
– Hook pressure fork -VAS 5161/2- into snap-in device and press assembly cartridge downwards.
– At the same time, turn knurled screw of assembly cartridge clockwise until tips engage in valve cotters.
– Move knurled screw back and forth slightly; the valve cotters are thus forced apart and taken up by the assembly cartridge.
– Release pressure fork.
– Take out assembly cartridge with knurled spacer ring, valve spring plate and valve spring.

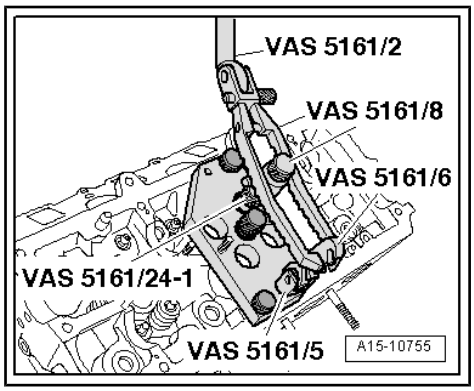

– Remove valve stem oil seals using the valve stem seal puller - 3364- .

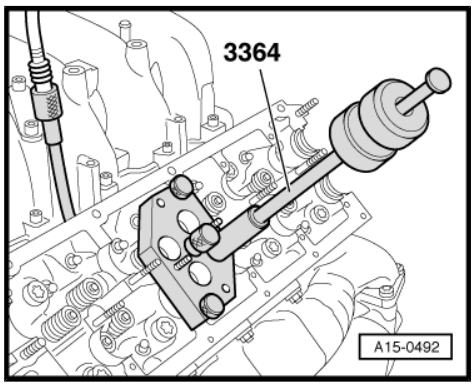

Note

A plastic sleeve -A- is included with the new valve stem oil seals.

– Fit plastic sleeve -A- onto the valve stem to prevent damage to the new valve stem oil seal -B-.
– Lightly lubricate sealing lip of valve stem oil seal.
– Slip valve stem oil seal over plastic sleeve.
– Carefully press valve stem oil seal onto valve guide using valve stem seal fitting tool - 3365- .
– Remove plastic sleeve.

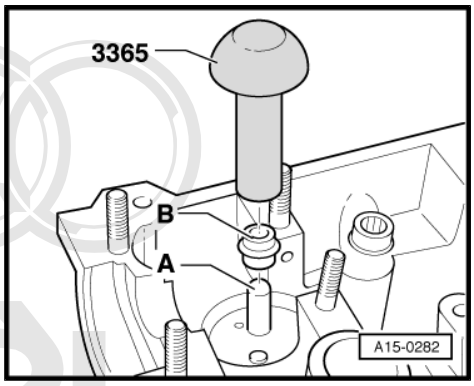

Protected by copyright. Copying for private or commercial purposes, in part or in whole, is not permitted unless authorised by AUDI AG. AUDI AG does not guarantee or accept any liability with respect to the correctness of information in this document. Copyright by AUDI AG.

– If valve cotters had been removed from assembly cartridge they must first be inserted in insertion device -VAS 5161/18- .

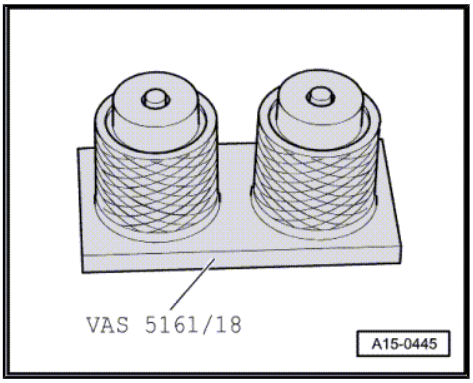

Note

Larger diameter of valve cotters faces upwards.

– Press assembly cartridge onto insertion device from above and take up valve cotters.

– Insert valve spring and valve spring plate.

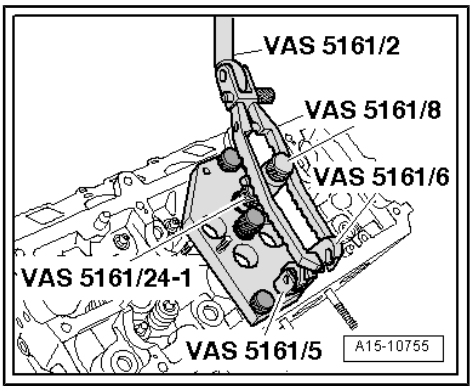

– Re-insert assembly cartridge -VAS 5161/8- into guide plate.

– Push pressure fork down and pull knurled screw upwards, while turning screw in both directions – this will insert the valve cotters.

– Release pressure fork with knurled screw still in pulled position.

– Repeat procedure for each valve.

Assembling

Installation is carried out in the reverse order; note the following:

Copyright by AUDI AG. The reproduction, transmission or use of this document or its contents is not permitted unless authorised by AUDI AG. AUDI AG does not guarantee or accept any liability with respect to the correctness of information in this document. Copyright by AUDI AG.

– Ensure that all roller rocker fingers make contact with the ends of the valve stems correctly and are clipped onto their respective hydraulic compensation elements.

– Install camshafts ⇒ page 167 .

3.7 Checking hydraulic valve compensation elements

Special tools and workshop equipment required

♦ Feeler gauge

Note

♦ *Hydraulic valve compensation elements cannot be serviced.*

♦ *Irregular valve noises when starting engine are normal.*

Procedure

– Start engine and run until coolant temperature reaches approx. 80 °C.

– Increase engine speed to approx. 2500 rpm for 2 minutes (perform road test if necessary).

Note

♦ *If the irregular valve noise stops but repeatedly re-occurs when driving short distances, then the oil retention valve is defective.*

♦ *The oil retention valve is integrated in the mounting plate* *⇒ Item 2 (page 203)* *and cannot be replaced on its own.*

If the hydraulic valve compensation elements are still noisy, locate the defective element as follows:

– Remove relevant cylinder head cover ⇒ page 155 .

– Rotate crankshaft until cam of hydraulic compensation element to be checked faces upwards (rotate crankshaft clockwise via central bolt for vibration damper).

– Determine clearance between cam and roller rocker finger.

– Press roller rocker finger down -arrow- using a screwdriver.

If it is possible to insert a feeler gauge of 0.20 mm between camshaft and roller rocker finger:

– Renew hydraulic compensation element
⇒ “3.4 Removing and installing camshafts”, page 167 .

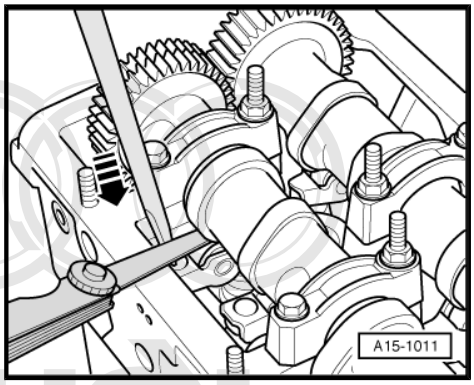

3.8 Valve dimensions

Protected by copyright. Copying for private or commercial purposes, in part or in whole, is not permitted unless authorised by AUDI AG. AUDI AG does not guarantee or accept any liability with respect to the correctness of information in this document. Copyright by AUDI AG.

Note

Inlet and exhaust valves must not be machined. Only grinding-in is permitted.

Dimension		Inlet valve	Exhaust valve
∅ a	mm	28.60 … 28.80	26.70 … 26.90
∅ b	mm	5.968 … 5.982	5.958 … 5.972
c	mm	97.25 … 97.45	97.35 … 97.55
α	∠°	45	45

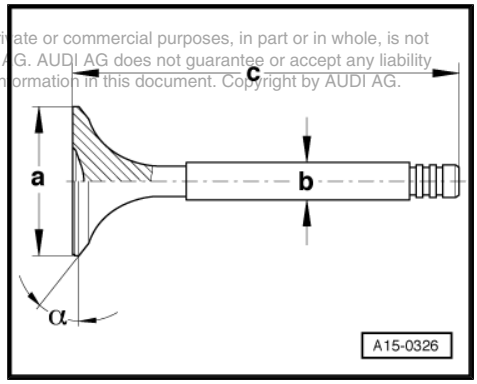

3.9 Machining valve seats

Note

Valve seats may not be machined due to the very small tolerances.

3.10 Checking valve guides

Special tools and workshop equipment required

♦ Universal dial gauge bracket - VW 387-

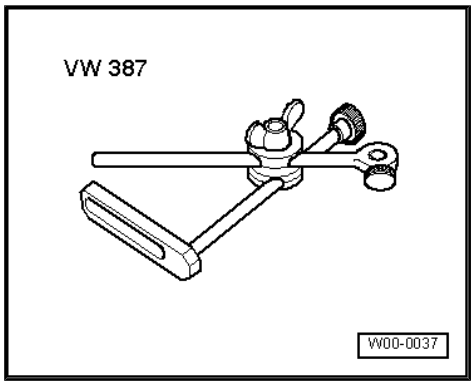

♦ Dial gauge - VAS 6079-

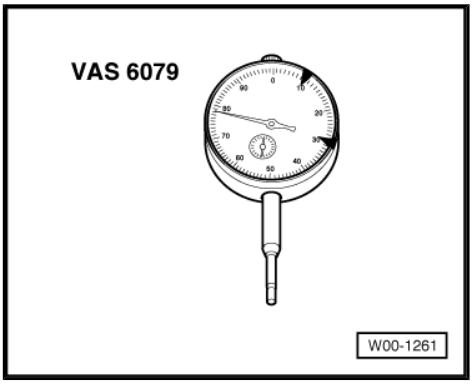

Procedure

– Insert valve into valve guide.

• End of valve stem must be flush with valve guide.

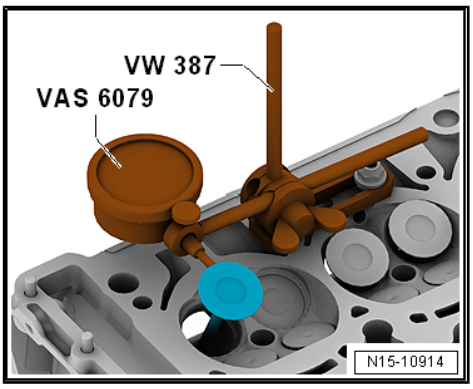

Note

Only insert inlet valve into inlet guide and exhaust valve into exhaust guide, as the stem diameters are different.

– Determine amount of sideways play.

• Wear limit for inlet and exhaust valve guide: max. 1.0 mm.

Note

♦ *If the wear limit is exceeded, repeat the measurement with new valves. Renew cylinder head if wear limit is still exceeded. Valve guides cannot be renewed.*

♦ *If the valve has to be renewed as part of a repair, use a new valve for the measurement.*

3.11 Checking valves

– Visually inspect for scoring on valve stem and on seating surface.

If scoring is clearly visible:

– Renew the relevant valve.

Protected by copyright. Copying for private or commercial purposes, in part or in whole, is not permitted unless authorised by AUDI AG. AUDI AG does not guarantee or accept any liability with respect to the correctness of information in this document. Copyright by AUDI AG.

17 – Lubrication

1 Removing and installing parts of lubrication system

⇒ “1.1 Oil pump, sump (bottom section), sump (centre section) - exploded view”, page 182

⇒ “1.2 Removing and installing oil level and oil temperature sender G266 ”, page 184

⇒ “1.3 Removing and installing sump (bottom section)”, page 184

⇒ “1.4 Removing and installing sump (centre section)”, page 186

⇒ “1.5 Removing and installing oil pump”, page 195

⇒ “1.6 Sump (top section) - exploded view”, page 197

⇒ “1.7 Removing and installing sump (top section)”, page 198

⇒ “1.8 Oil cooler, pressure control valve, oil filter housing and spray nozzle valve - exploded view”, page 202

⇒ “1.9 Removing and installing oil cooler”, page 204

⇒ “1.10 Removing and installing oil filter housing”, page 205

⇒ “1.11 Removing and installing pressure control valve for crankcase breather system”, page 206

⇒ “1.12 Removing and installing mounting plate for oil cooler, pressure control valve and oil filter housing”, page 208

⇒ “1.13 Removing and installing oil pressure switch F1 ”, page 210

⇒ “1.14 Removing and installing oil temperature sender G8 ”, page 210

⇒ “1.15 Checking oil pressure”, page 211

⇒ “1.16 Engine oil”, page 212

⇒ “1.17 Checking engine oil level”, page 212

Protected by copyright. Copying for private or commercial purposes, in part or in whole, is not permitted unless authorised by AUDI AG. AUDI AG does not guarantee or accept any liability with respect to the correctness of information in this document. Copyright by AUDI AG.

1.1 Oil pump, sump (bottom section), sump (centre section) - exploded view

Note

- *If large quantities of metal shavings or particles are found in the engine oil when repairing the engine, the oil passages must be cleaned carefully, and the oil cooler must be renewed in order to prevent further damage occurring later.*
- *Oil spray jet for piston cooling ⇒ page 99 .*

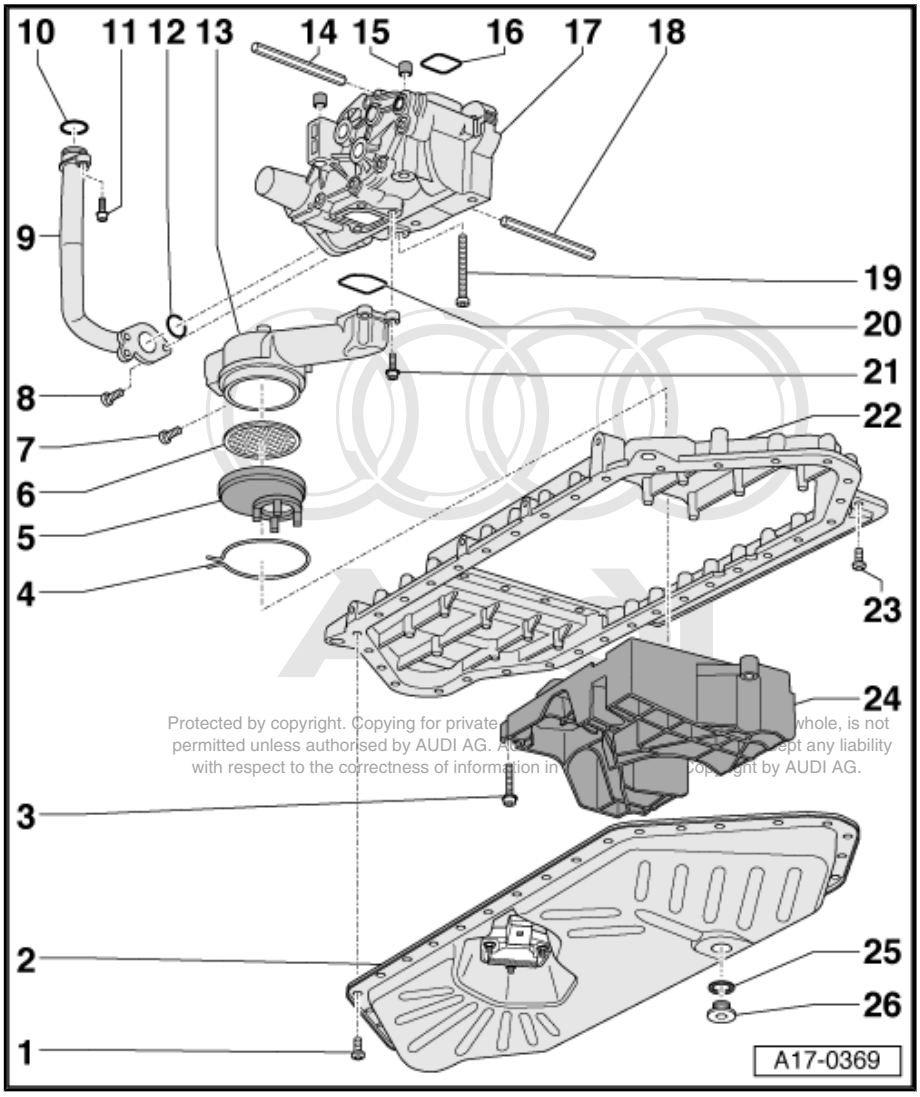

Protected by copyright. Copying for private whole, is not permitted unless authorised by AUDI AG. pt any liability with respect to the correctness of information in ght by AUDI AG.

1 - 8 Nm + 90° (1/4 turn) further
- ❑ Renew
- ❑ Tighten in stages and in diagonal sequence

2 - Sump (bottom section)
- ❑ Removing and installing ⇒ page 184
- ❑ With oil level and oil temperature sender - G266-
- ❑ Removing and installing oil level and oil temperature sender - G266- ⇒ page 184

3 - 9 Nm

4 - Retaining ring

5 - Intake connecting pipe

6 - Oil strainer
- ❑ Clean if dirty

7 - 9 Nm

8 - 9 Nm

9 - Oil pipe

10 - O-ring
- ❑ Renew

11 - 8 Nm + 90° (1/4 turn) further
- ❑ Renew

12 - Seal
- ❑ Renew

13 - Suction duct

14 - Drive shaft
- ❑ For coolant pump

15 - Dowel sleeve
- ❑ 2x

16 - Gasket
- ❑ Renew

17 - Oil pump
- ❑ Do not dismantle
- ❑ With pressure control valve: 4.5 bar
- ❑ Removing and installing ⇒ page 195

18 - Drive shaft
- ❑ For oil pump

19 - 9 Nm

20 - Gasket
- ❑ Renew

21 - 9 Nm

22 - Sump (centre section)

- ❑ Removing and installing ⇒ page 186

23 - 8 Nm + 90° (1/4 turn) further

- ❑ Renew
- ❑ Tighten in stages and in diagonal sequence

24 - Baffle plate

25 - Seal

- ❑ Renew

26 - Oil drain plug, 50 Nm

1.2 Removing and installing oil level and oil temperature sender - G266-

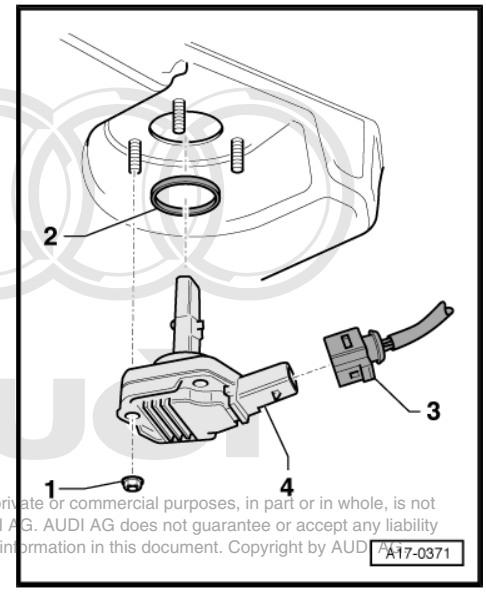

Removing

– Drain off engine oil ⇒ Maintenance ; Booklet 404 .

– Unplug electrical connector -3-.

– Remove nuts -1- and detach oil level and oil temperature sender - G266- -item 4-.

Installing

Installation is carried out in the reverse order; note the following:

Note

Renew seal -2-.

– Fill up with engine oil and check engine oil level ⇒ Maintenance ; Booklet 404 .

Protected by copyright. Copying for private or commercial purposes, in part or in whole, is not permitted unless authorised by AUDI AG. AUDI AG does not guarantee or accept any liability with respect to the correctness of information in this document. Copyright by AUDI AG.

Tightening torque

Component	Nm
Oil level and oil temperature sender - G266- to sump (bottom section)	9

1.3 Removing and installing sump (bottom section)

Special tools and workshop equipment required

- ♦ Used oil collection and extraction unit - V.A.G 1782- or -VAS 6622A-

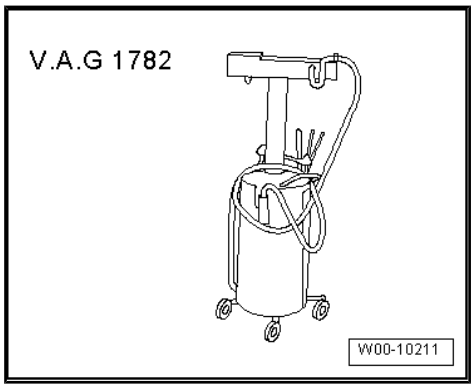

- Electric drill with plastic brush attachment
- Safety goggles
- Sealant ⇒ Electronic parts catalogue

Removing

– Open quick-release fasteners -1- and remove noise insulation (front).

– Position used oil collection and extraction unit below engine.

– Drain off engine oil.

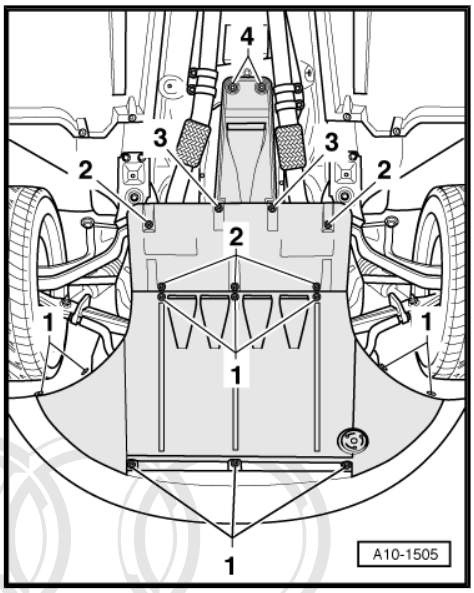

– Unplug electrical connector at oil level and oil temperature sender - G266- -item 1-.

– Unbolt sump (bottom section) -arrow-.

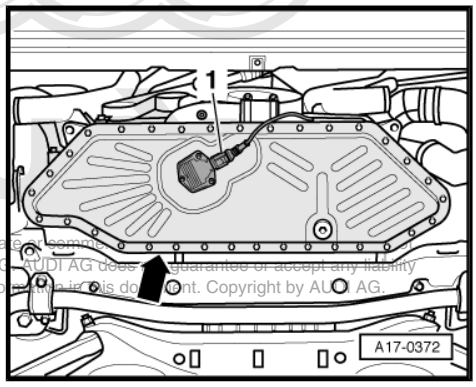

Protected by copyright. Copying for private or commercial purposes, in part or in whole, is not permitted unless authorised by AUDI AG. AUDI AG does not guarantee or accept any liability with respect to the correctness of information in this document. Copyright by AUDI AG.

Installing

Installation is carried out in the reverse order; note the following:

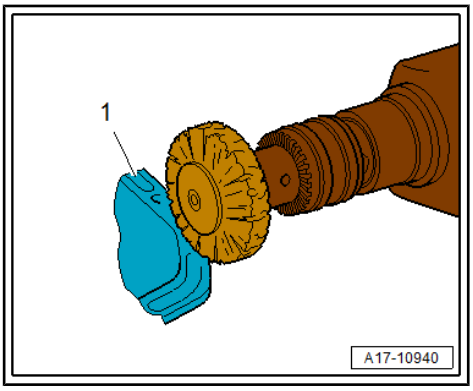

Note

Renew seals.

– Remove sealant residue from sump (bottom section) -1- and sump (centre section) with rotating plastic brush or similar.

WARNING

Wear safety goggles.

– Clean sealing surfaces; they must be free of oil and grease.

Note

Note the use-by date of the sealant.

– Cut off tube nozzle at front marking (diameter of nozzle approx. 1.5 mm).

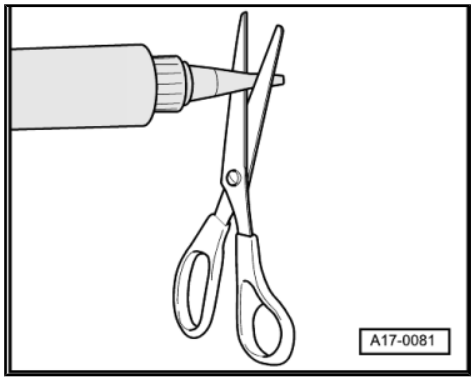

– Apply sealant bead to clean sealing surface of bottom section of sump, as shown in illustration.

• The bead of sealant should be 2 mm wide -arrow-.

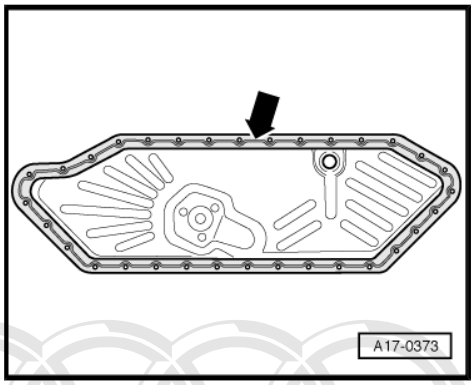

Note

♦ *The bead of sealant must not be thicker than specified, otherwise excess sealant can enter the sump (bottom section) and obstruct the strainer in the oil intake pipe.*

♦ *The sump (bottom section) must be installed within 5 minutes after applying sealant.*

– Fit sump (bottom section) and tighten all bolts initially to 5 Nm in diagonal sequence.

– Tighten bolts on sump (bottom section) in diagonal sequence.

– Fill up with engine oil and check engine oil level ⇒ Maintenance ; Booklet 404 .

Tightening torques

Component	Nm
Bottom section of sump to centre section of sump	8 + 90° [1] [2]
Oil drain plug	50
• [1] Renew bolts. • [2] 90° = one quarter turn.	

Protected by copyright. Copying for private or commercial purposes, in part or in whole, is not permitted unless authorised by AUDI AG. AUDI AG does not guarantee or accept any liability with respect to the correctness of information in this document. Copyright by AUDI AG.

1.4 Removing and installing sump (centre section)

Special tools and workshop equipment required

- Support bracket - 10 - 222 A-
- Shackle - 10 - 222 A /12-
- Adapters - 10 - 222 A /21-
- Used oil collection and extraction unit - V.A.G 1782- or -VAS 6622A-
- Sealant ⇒ Electronic parts catalogue
- Electric drill with plastic brush attachment
- Safety goggles

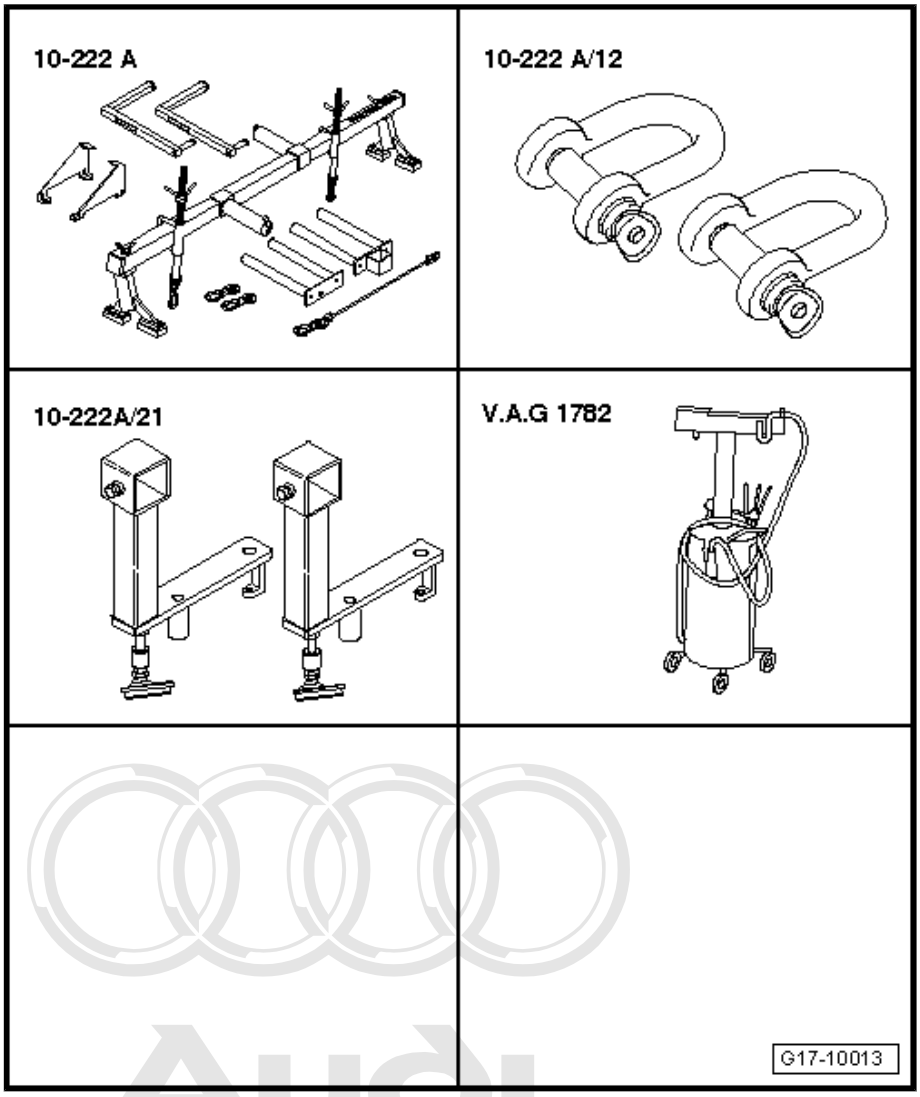

Removing

– Carefully pull engine cover panel off four retaining pins one after the other -arrows-.

Protected by copyright. Copying for private or commercial purposes, in part or in whole, is not permitted unless authorised by AUDI AG. AUDI AG does not guarantee or assume any liability with respect to the correctness of information in this document.

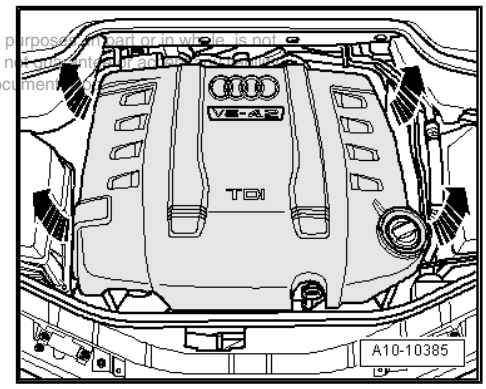

– Remove cover above coolant expansion tank -arrows-.

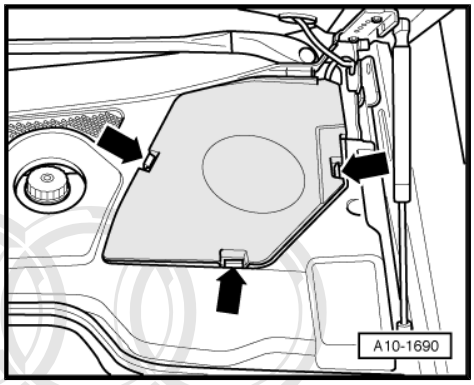

– Pull off rubber seal -1- on plenum chamber covers.
– Detach plenum chamber covers -2- and -3-.

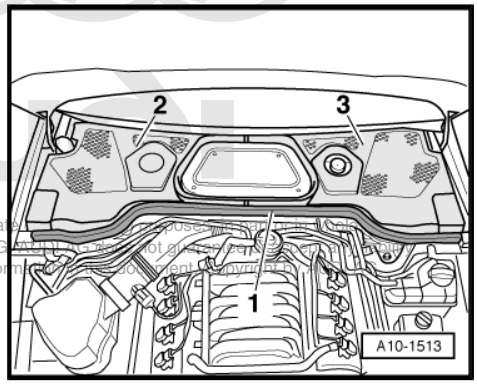

Protected by copyright. Copying for private or commercial purposes, in part or in whole, is not permitted unless authorised by AUDI AG. AUDI AG does not guarantee or assume any liability with respect to the correctness of information in this document. Copyright by AUDI AG.

– Remove bolt -arrow-.
– Pivot bracket for air conditioner pipe to one side.

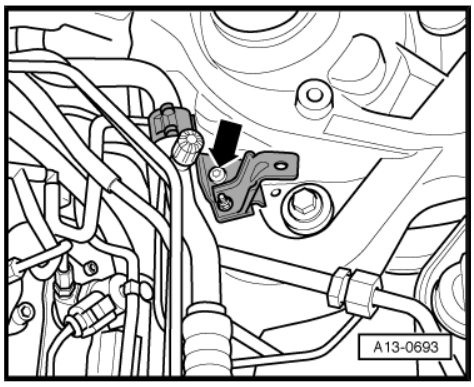

Note

To prevent damage to the refrigerant lines, ensure that the pipes and hoses are not stretched, kinked or bent.

– Remove bolts -arrows- on fuel filter bracket.

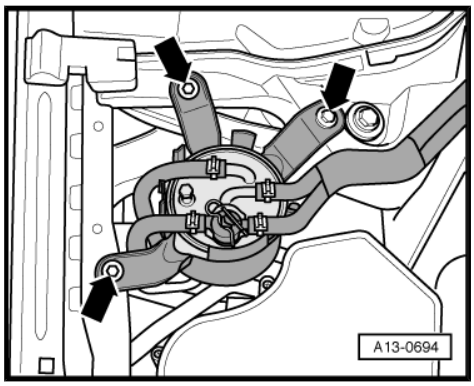

Note

Fuel filter remains in engine compartment with fuel lines connected.

– Unscrew rear bolts -3- for body brace.

– Attach adapters - 10 - 222 A /21- without cross beam onto suspension turrets.

• Supports are marked for left and right side of vehicle.

• The centre resting point -2- of supports is positioned on front bolts for body brace.

• The adapters - 10 - 222 A /21- are attached by means of the rear securing bolts -3- for the body brace.

• The knurled screw -1- must be screwed down until support plate rests on suspension turret.

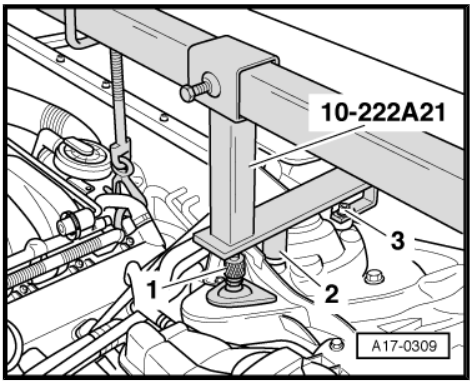

– Fit cross beam with adapters - 10 - 222 A /3- to adapters - 10 - 222 A /21- .

– Attach shackles - 10 - 222 A /12- to engine lifting eyes.

– Secure spindles of support bracket - 10 - 222 A- to shackles - 10 - 222 A /12- .

– Take up weight of engine using spindles of support bracket.

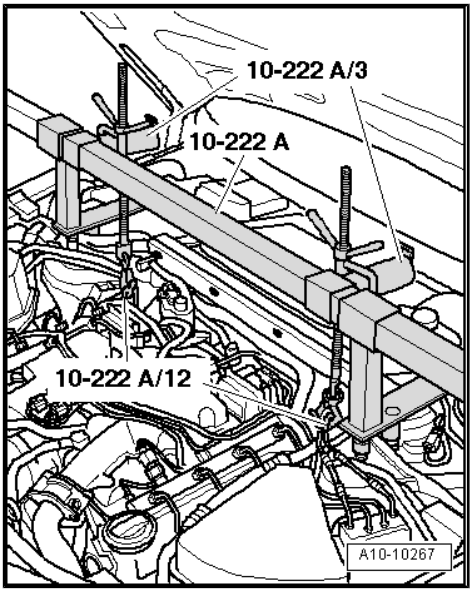

– Remove both front wheels.

– Release fasteners -1- and remove front noise insulation.

– Remove front sections of front wheel housing liners (left and right) ⇒ Rep. gr. 66 .

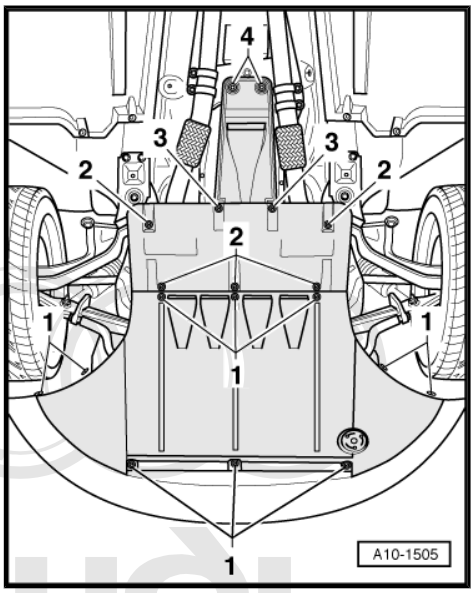

Protected by copyright. Copying for private or commercial purposes, in part or in whole, is not permitted unless authorised by AUDI AG. AUDI AG does not guarantee or accept any liability with respect to the correctness of information in this document. Copyright by AUDI AG.

– Remove bolts -arrows- and detach bracket for charge air cooler (left-side).

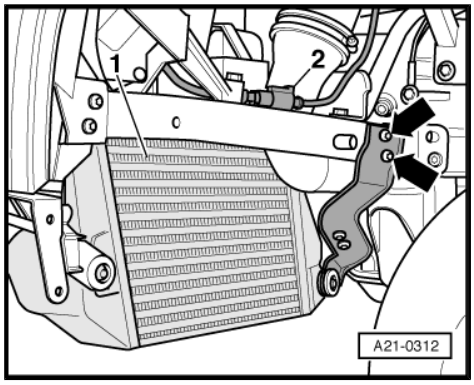

Note

Disregard items -1- and -2-.

– Remove bolt -arrow- for air intake pipe (left-side).

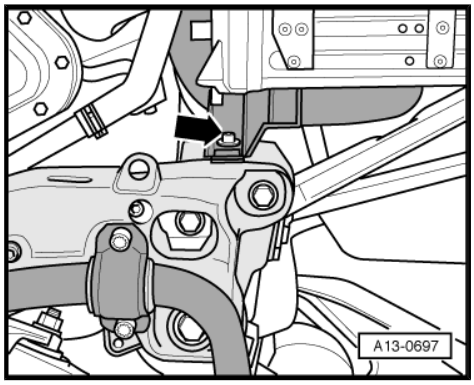

– Remove bolts -arrows- and detach bracket for charge air cooler (right-side).

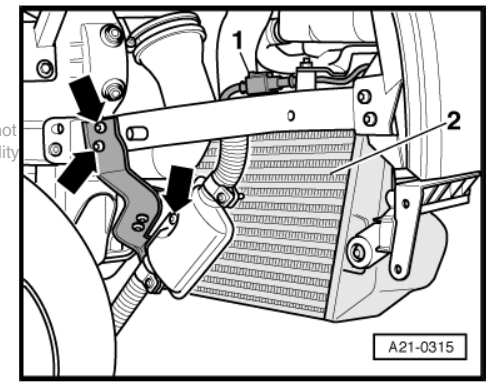

Note

Protected by copyright. Copying for private or commercial purposes, in part or in whole, is not permitted unless authorised by AUDI AG. AUDI AG does not guarantee or accept any liability with respect to the correctness of information in this document. Copyright by AUDI AG.

Disregard items -1- and -2-.

– Remove bolt -arrow- for air intake pipe (right-side).

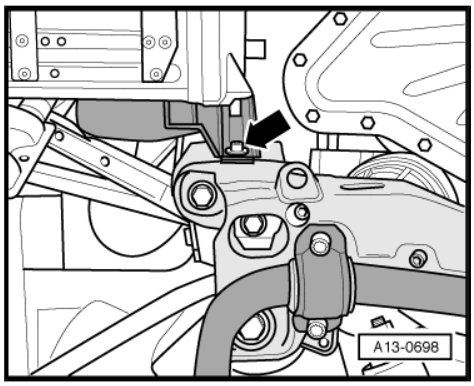

– Unscrew bolts -2- on retaining clamps (left and right) for anti-roll bar and move anti-roll bar -1- downwards.

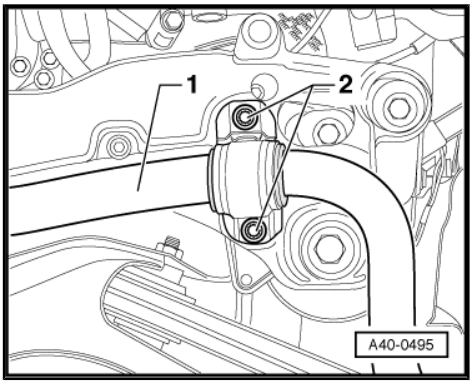

– Unscrew bolts -1 … 3- and remove engine cross member.

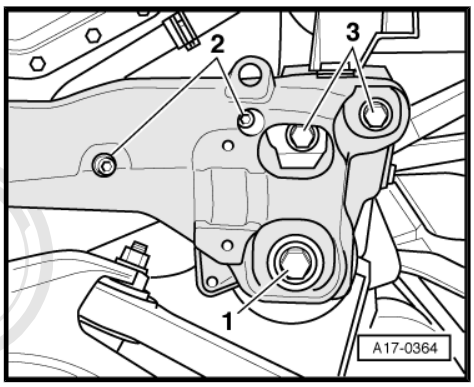

– Position used oil collection and extraction unit below engine.
– Drain off engine oil.
– Then unscrew alternator bolt -3- approx. 2 turns.

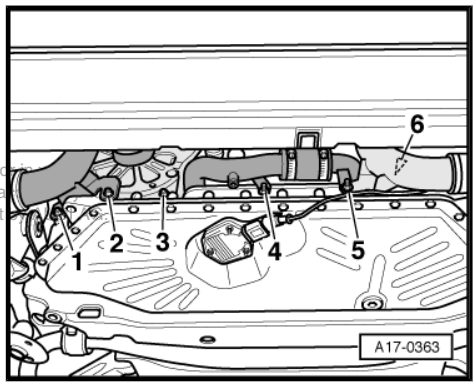

Note

Protected by copyright. Copying for private or commercial purposes, in part or in
permitted unless authorised by AUDI AG. AUDI AG does not guarantee or a
with respect to the correctness of information in this document. Copyright

Tap carefully on bolt head with flat side of hammer to release threaded bush of alternator mount.

– Remove bolts -1 ... 6-.

– Unscrew retaining clip -arrow- for power steering hydraulic line at sump (centre section).

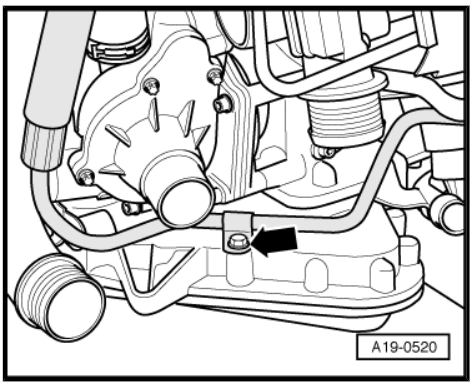

– Detach oil return hose (left and right) -3- from sump (centre section).

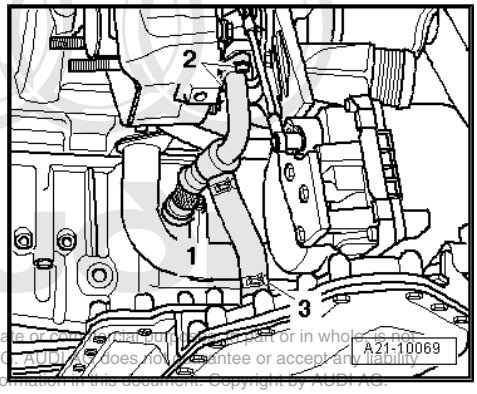

Protected by copyright. Copying for private or commercial purposes, in part or in whole, is not permitted unless authorised by AUDI AG. AUDI AG does not guarantee or accept any liability with respect to the correctness of information in this document. Copyright by AUDI AG.

Note

Disregard items -1- and -2-.

– Unplug electrical connector at oil level and oil temperature sender - G266- -item 1-.

– Unbolt sump (bottom section) -arrow-.

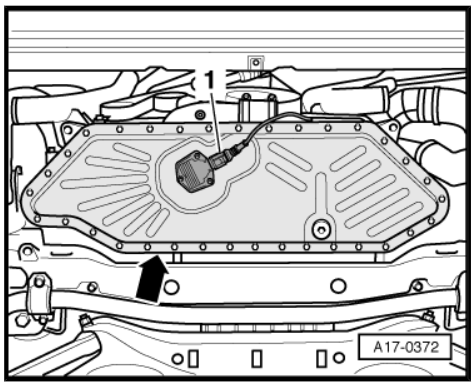

– Unscrew baffle plate -arrows-.

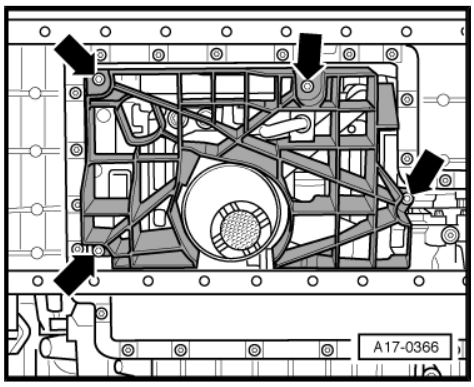

– Remove sump (centre section) -1-.

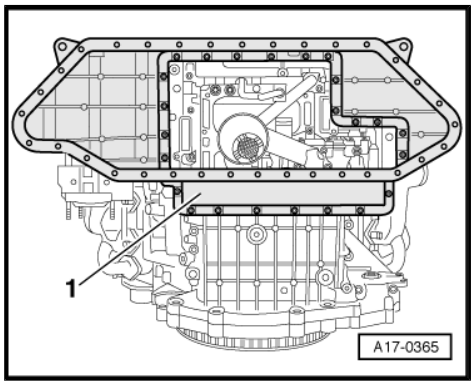

Installing

Installation is carried out in the reverse order; note the following:

Note

- *Renew gaskets and seals.*
- *Secure all hose connections with the correct type of hose clips (same as original equipment) ⇒ Electronic parts catalogue .*

– Remove old sealant from grooves on sump (top section) -1- and from sealing surfaces.

WARNING

Wear safety goggles.

– Remove sealant residue from centre and top sections of sump with rotating plastic brush or similar.

– Clean sealing surfaces; they must be free of oil and grease.

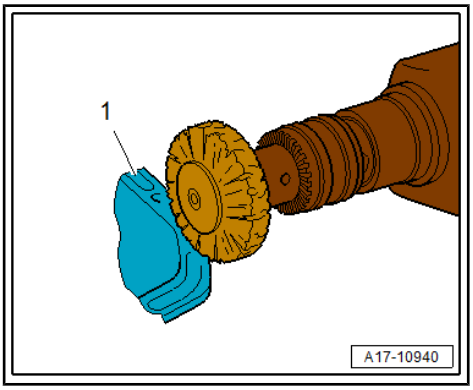

Note

Note the use-by date of the sealant.

– Cut off tube nozzle at front marking (diameter of nozzle approx. 1.5 mm).

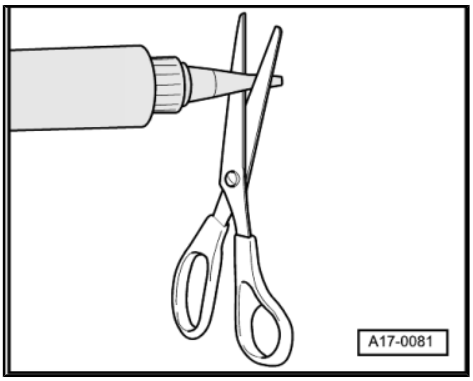

Protected by copyright. Copying for private or commercial purposes, in part or in whole, is not permitted unless authorised by AUDI AG. AUDI AG does not guarantee or accept any liability with respect to the correctness of information in this document. Copyright by AUDI AG.

– Apply sealant bead to clean sealing surface of centre section of sump, as shown in illustration.

- The circumferential groove -arrow- on the sealing surfaces must be completely filled with sealant.
- The bead of sealant must project 1.5 … 2.0 mm above the sealing surface.

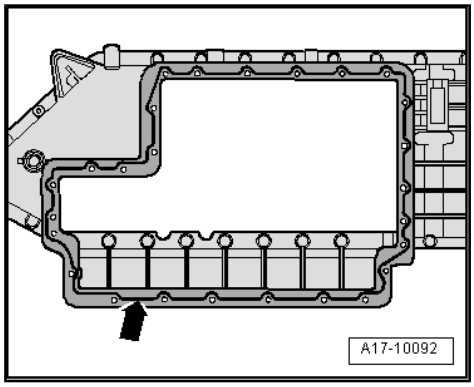

Note

♦ *The sealant beads must not be thicker than specified, otherwise excess sealant could enter the sump and clog the strainer in the oil pump.*

♦ *The sump (centre section) must be installed within 5 minutes after applying sealant.*

– Fit sump (centre section) and tighten all bolts initially to 5 Nm in diagonal sequence.

– Tighten bolts on sump (centre section) in diagonal sequence.

– Install baffle plate.

– Install sump (bottom section) ⇒ page 184 .

– Fill up with engine oil and check engine oil level ⇒ Maintenance ; Booklet 404 .

– Install subframe ⇒ Rep. gr. 40 .

– Tighten subframe bolts only to specified torque (do not turn further). Do not tighten bolts to final setting until after wheel alignment check has been performed ⇒ Rep. gr. 40 .

WARNING

The vehicle must not be driven at this stage.

– Install anti-roll bar ⇒ Rep. gr. 40 .

– Install front sections of front wheel housing liners (left and right) ⇒ Rep. gr. 66 .

– Install body brace ⇒ Rep. gr. 47 .

– Perform wheel alignment check ⇒ Rep. gr. 44 .

WARNING

Tighten bolts for subframe to final setting after performing wheel alignment check.

Protected by copyright. Copying for private or commercial purposes, in part or in whole, is not permitted unless authorised by AUDI AG. AUDI AG does not guarantee or accept any liability with respect to the correctness of information in this document. Copyright by AUDI AG.

Tightening torques

Component	Nm
Engine cross member to longitudinal member	68
Sump (centre section) to sump (top section)	8 + 90° 1) 2)
Hydraulic line to sump (centre section)	9
Baffle plate to engine	9
Bracket for charge air cooler to body	9
Air pipe to engine cross member	9
Fuel filter bracket to bodywork	9
Bracket for refrigerant line to body	9

- 1) Renew bolts.
- 2) 90° = one quarter turn.

1.5 Removing and installing oil pump

Special tools and workshop equipment required

- Used oil collection and extraction unit - V.A.G 1782- or -VAS 6622A-

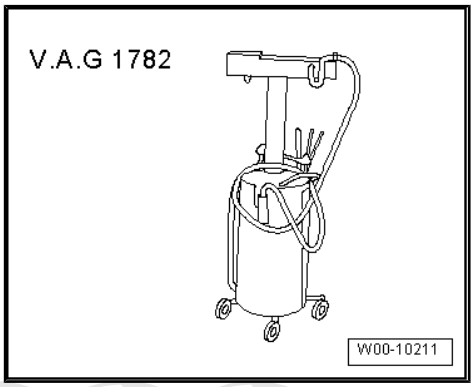

- Long-nose grip pliers - VAS 6226-

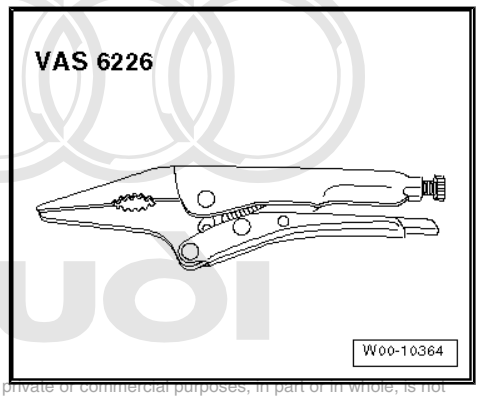

Protected by copyright. Copying for private or commercial purposes, in part or in whole, is not permitted unless authorised by AUDI AG. AUDI AG does not guarantee or accept any liability with respect to the correctness of information in this document. Copyright by AUDI AG.

Removing

- Drain off coolant ⇒ page 215 .
- Remove radiator ⇒ page 242 .
- Remove radiator cowl ⇒ page 246 .
- Remove coolant pipes (front) ⇒ page 227 .
- Remove coolant pump ⇒ page 222 .
- Remove centre section of sump ⇒ page 186 .

– Position used oil collection and extraction unit below engine.
– Unscrew bolts -arrows- and remove intake connecting pipe.

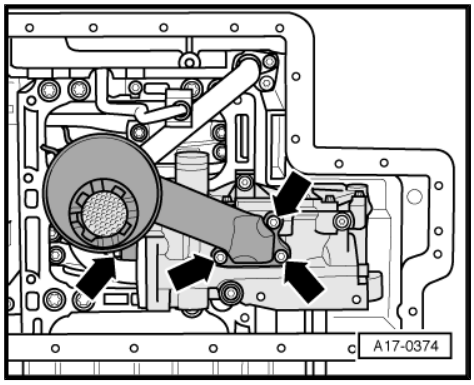

– Unscrew bolts -arrows- and remove oil pipe.

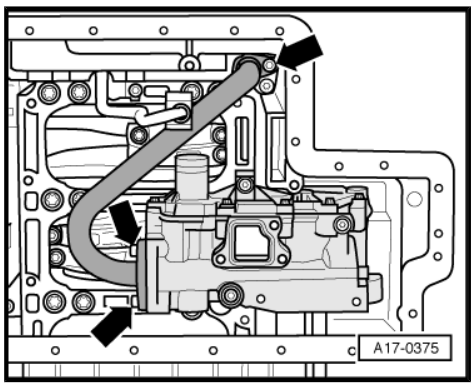

– Unscrew bolts -arrows- and remove oil pump.

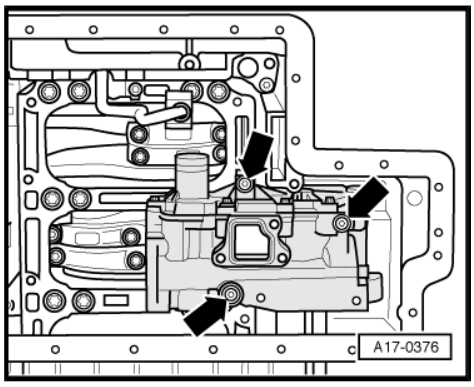

– Hold oil pump drive shaft -1- firmly with long-nose grip pliers - VAS 6226- and push back against spring pressure.

Installing

Installation is carried out in the reverse order; note the following:

Note

Renew seals and O-rings.

– Check whether the two dowel sleeves are fitted in the cylinder block; install if necessary.
– Hold oil pump drive shaft -1- firmly with long-nose grip pliers - VAS 6226- and push back against spring pressure.
– Fit oil pump to sump (top section); insert drive shaft into drive mechanism on oil pump when doing so.
– Release long-nose grip pliers - VAS 6226- and let drive shaft -1- slide into oil pump.

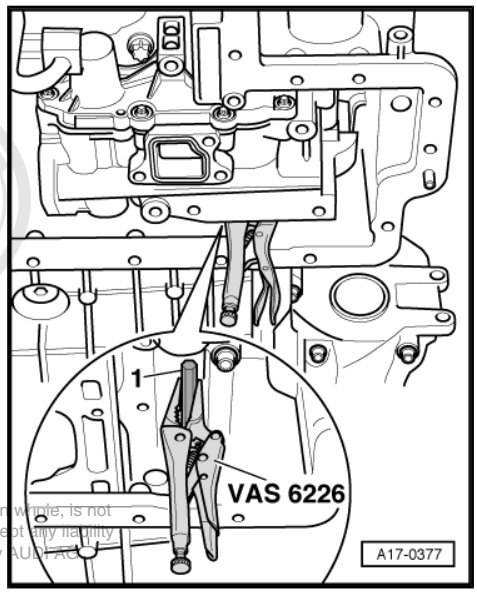

Protected by copyright. Copying for private or commercial purposes, in part or in whole, is not permitted unless authorised by AUDI AG. AUDI AG does not guarantee or accept any liability with respect to the correctness of information in this document. Copyright by AUDI AG.

– Secure the oil pump -arrows-.

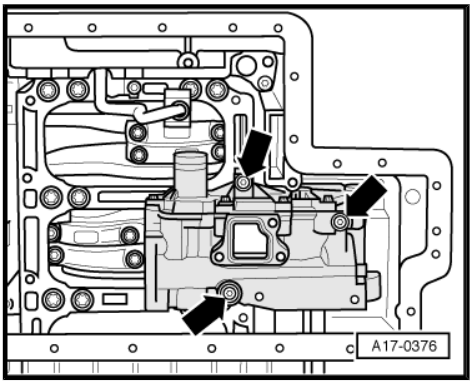

– Check to ensure that the drive shaft is positively engaged in the oil pump. Try to turn the oil pump gears by reaching into the opening in the intake pipe -arrow- of oil pump.

• You should not be able to turn the gears.

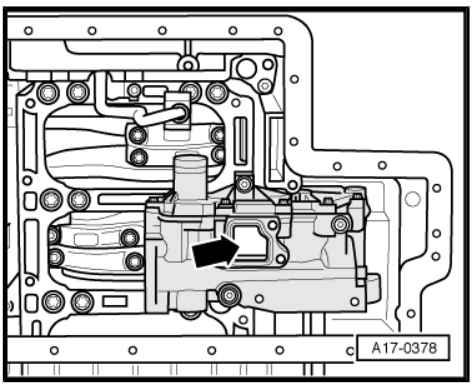

– Install sump (centre section) ⇒ page 186 .

– Install coolant pump ⇒ page 222 .

– Install coolant pipes (front) ⇒ page 227 .

– Install radiator cowl ⇒ page 246 .

– Install radiator ⇒ page 242 .

Note

Do not reuse coolant.

– Fill cooling system ⇒ page 216 .

Tightening torques

Component		Nm
Oil pump to cylinder block		9
Oil pipe to:	Sump (top section)	8 + 90° 1) 2)
	Oil pump	9
Intake connecting pipe to oil pump		9

• 1) Renew bolts.

• 2) 90° = one quarter turn.

This text is copyrighted. Copying for private or commercial purposes, in part or in whole, is not permitted unless authorised by AUDI AG. AUDI AG does not guarantee or accept any liability with respect to the correctness of information in this document. Copyright by AUDI AG.

1.6 Sump (top section) - exploded view

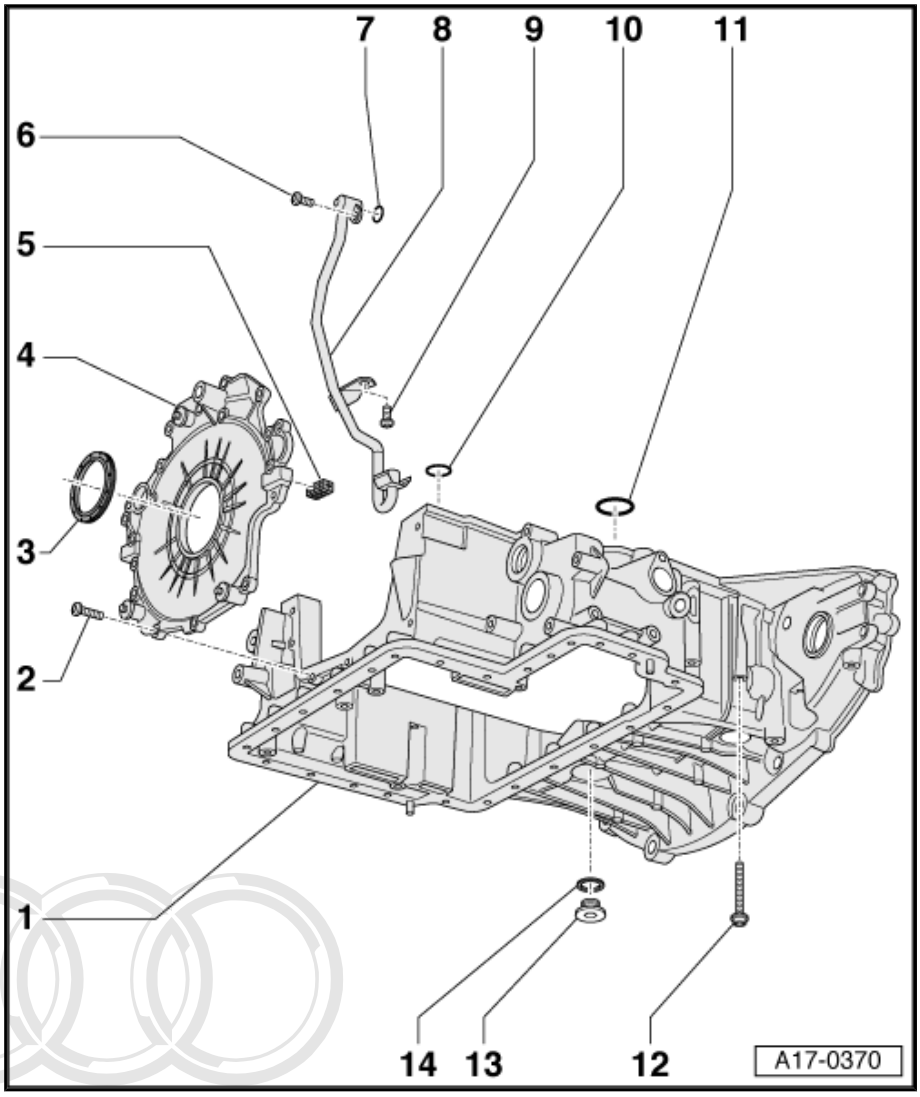

1 - Sump (top section)
- ❑ Removing and installing ⇒ page 198

2 - 9 Nm
- ❑ Tighten in stages and in diagonal sequence

3 - Oil seal
- ❑ For crankshaft (pulley end)
- ❑ Renewing ⇒ page 65

4 - Sealing flange (front)
- ❑ Removing and installing ⇒ page 68

5 - Sealing element
- ❑ 2x

6 - 10 Nm
- ❑ Self-locking
- ❑ Renew

7 - O-ring
- ❑ Renew

8 - Oil return line

9 - 10 Nm
- ❑ Self-locking
- ❑ Renew

10 - O-ring
- ❑ Renew

11 - O-ring
- ❑ Renew

12 - 10 Nm + 90° ($^1/_4$ turn) further
- ❑ Renew
- ❑ Tighten in stages and in diagonal sequence

13 - Screw plug, 35 Nm
- ❑ For TDC bore

Protected by copyright. Copying for private or commercial purposes, in part or in whole, is not permitted unless authorised by AUDI AG. AUDI AG does not guarantee or accept any liability with respect to the correctness of information in this document. Copyright by AUDI AG.

14 - Seal
- ❑ Renew

1.7 Removing and installing sump (top section)

Special tools and workshop equipment required

- Used oil collection and extraction unit - V.A.G 1782- or -VAS 6622A-

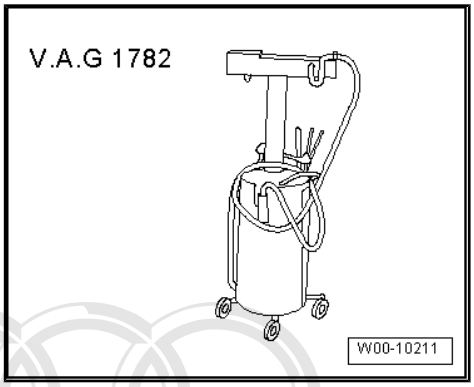

- Safety goggles
- Electric drill with plastic brush attachment
- Sealant ⇒ Electronic parts catalogue

Removing

– Release fasteners -1-, -2- and -4- and take off noise insulation panels.

– Position used oil collection and extraction unit below engine.

– Drain off engine oil.

– Remove engine ⇒ page 8 .

– Separate engine from gearbox ⇒ page 31 .

– Secure engine to engine stand ⇒ page 38 .

Protected by copyright. Copying for private or commercial purposes, in part or in whole, is not permitted unless authorised by AUDI AG. AUDI AG does not guarantee or assume any liability with respect to the correctness of information.

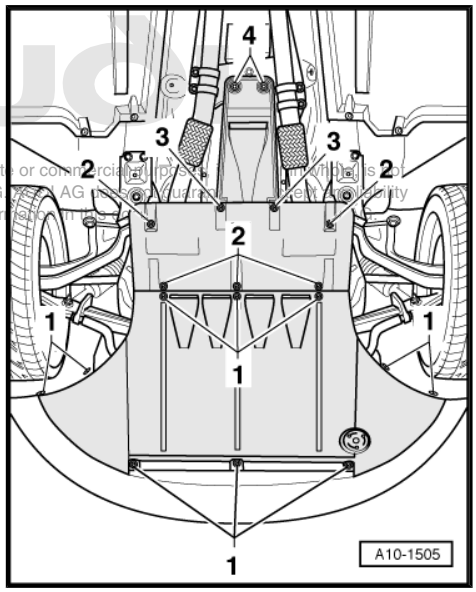

– Remove bolts -4- and -6-.

– Detach support for turbocharger.

– Remove bolts -2- and -5-.

– Remove oil return hose -1- from sump (centre section).

– Detach oil return line (left-side).

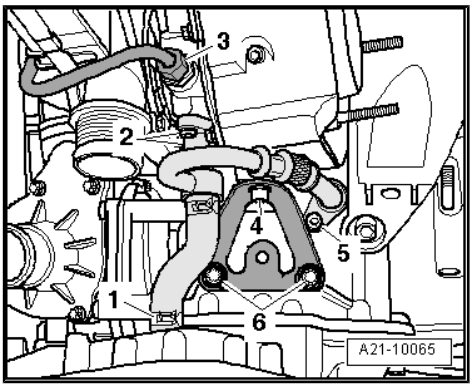

Note

Disregard -item 3-.

– Remove bolts -1- and -2-.
– Remove oil return hose -3- from sump (centre section).
– Remove oil return line (right-side).
– Remove alternator ⇒ Electrical system; Rep. gr. 27
– Remove coolant pipes: front ⇒ page 227 , left-side ⇒ page 232 , right-side ⇒ page 237 .
– Remove coolant pump ⇒ page 222 .
– Remove timing chain covers ⇒ page 108 .
– Remove spur gear drive ⇒ page 148 .
– Remove sealing flange (front) ⇒ page 68 .
– Remove centre section of sump ⇒ page 186 .
– Remove oil pump ⇒ page 195 .

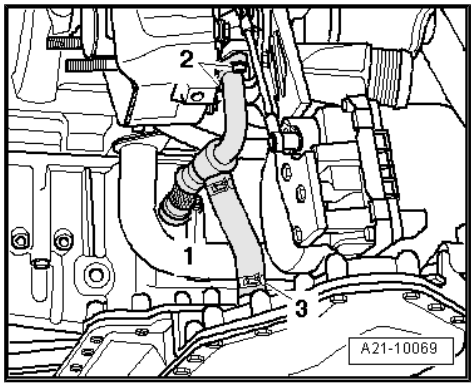

– Remove bolts -1 … 4- for sump (top section).
– Press sump (top section) off spring pins on cylinder block.

Installing

Note

♦ *Renew gaskets, seals and O-rings.*
♦ *Secure all hose connections with the correct type of hose clips (same as original equipment) ⇒ Electronic parts catalogue .*

– Remove old sealant from grooves on sump (top section) -1- and from sealing surfaces.

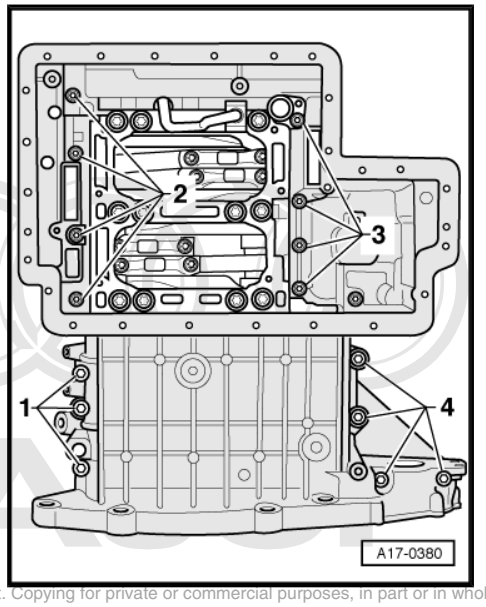

Protected by copyright. Copying for private or commercial purposes, in part or in whole, is not permitted unless authorized by AUDI AG. AUDI AG does not guarantee or accept any liability with respect to the correctness of information in this document. Copyright by AUDI AG.

WARNING

Wear safety goggles.

– Remove sealant residue from sump (top section) and cylinder block with rotating plastic brush or similar.
– Clean sealing surfaces; they must be free of oil and grease.

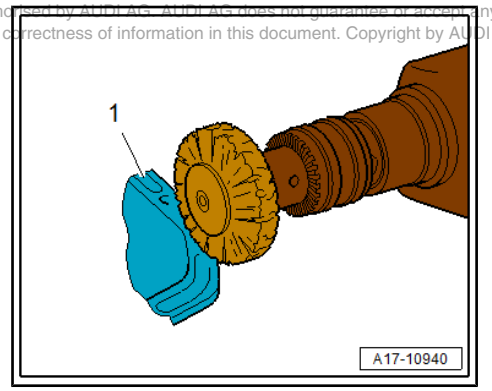

Note

Note the use-by date of the sealant.

– Cut off tube nozzle at front marking (diameter of nozzle approx. 1.5 mm).

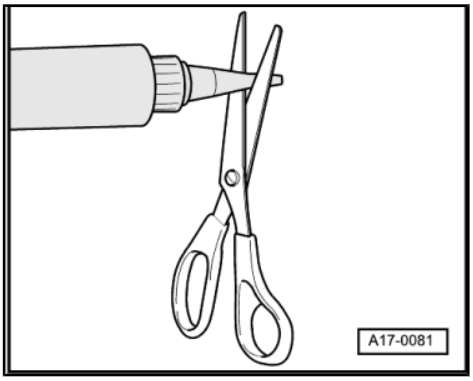

– Apply beads of sealant -arrows- onto clean sealing surface of sump (top section) as illustrated.

• The grooves -arrows- on the sealing surfaces must be completely filled with sealant.

• The beads of sealant must project 1.5 … 2.0 mm above the sealing surface.

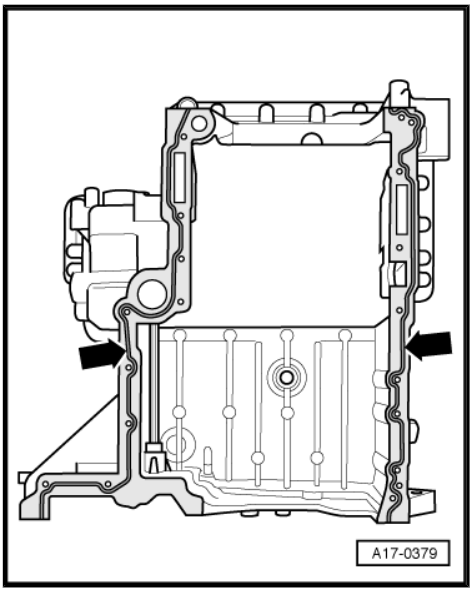

Note

ted by copyright. Copying for private or commercial purposes, in part or in whole, is not tted unless authorised by AUDI AG. AUDI AG does not guarantee or accept any liability with respect to the correctness of information in this document. Copyright by AUDI AG.

♦ *The sealant beads must not be thicker than specified, otherwise excess sealant could enter the sump and clog the strainer in the oil pump.*

♦ *The sump (top section) must be installed within 5 minutes after applying sealant.*

– Apply a small amount of sealant to O-rings ⇒ Item 10 (page 198) and ⇒ Item 11 (page 198) and fit O-rings into grooves on cylinder block.

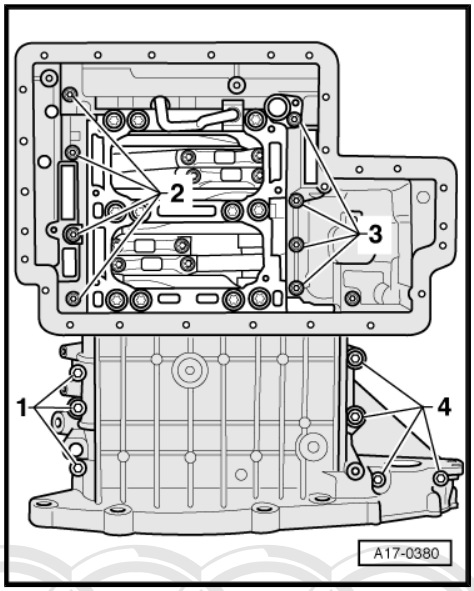

– Fit sump (top section) to cylinder block and tighten bolts -1 … 4- in diagonal sequence to 5 Nm.

– Tighten bolts -1 ... 4- in diagonal sequence.

Remaining installation steps are carried out in reverse sequence; note the following:

– Install oil pump ⇒ page 195 .

– Install sump (centre section) ⇒ page 186 .

– Install sump (bottom section) ⇒ page 184 .

– Install sealing flange (front) ⇒ page 68 .

– Install spur gear drive ⇒ page 148 .

– Install timing chain covers ⇒ page 108 .

– Install drive plate ⇒ page 71 .

– Install coolant pump ⇒ page 222 .

– Install coolant pipes: left-side ⇒ page 232 , right-side ⇒ page 237 , front ⇒ page 227 .

– Install alternator ⇒ Electrical system; Rep. gr. 27

– Bolt gearbox to engine and install engine/gearbox assembly ⇒ page 40 .

– Fill up with engine oil and check engine oil level ⇒ Maintenance ; Booklet 404 .

Tightening torques

Component		Nm
Sump (top section) to cylinder block		10 + 90° 1)2)
Oil return pipe to:	Turbocharger	10
	Sump (top section)	10
Support for turbocharger to:	Sump (top section)	22
	Turbocharger	40 3)4)

- 1) Renew bolts.
- 2) 90° = one quarter turn.
- 3) Coat threads and contact surface with high-temperature paste; for high-temperature paste refer to ⇒ Electronic parts catalogue .
- 4) Tightening sequence ⇒ page 257 .

Protected by copyright. Copying for private or commercial purposes, in part or in whole, is not permitted unless authorised by AUDI AG. AUDI AG does not guarantee or accept any liability with respect to the correctness of information in this document. Copyright by AUDI AG.

1.8 Oil cooler, pressure control valve, oil filter housing and spray nozzle valve - exploded view

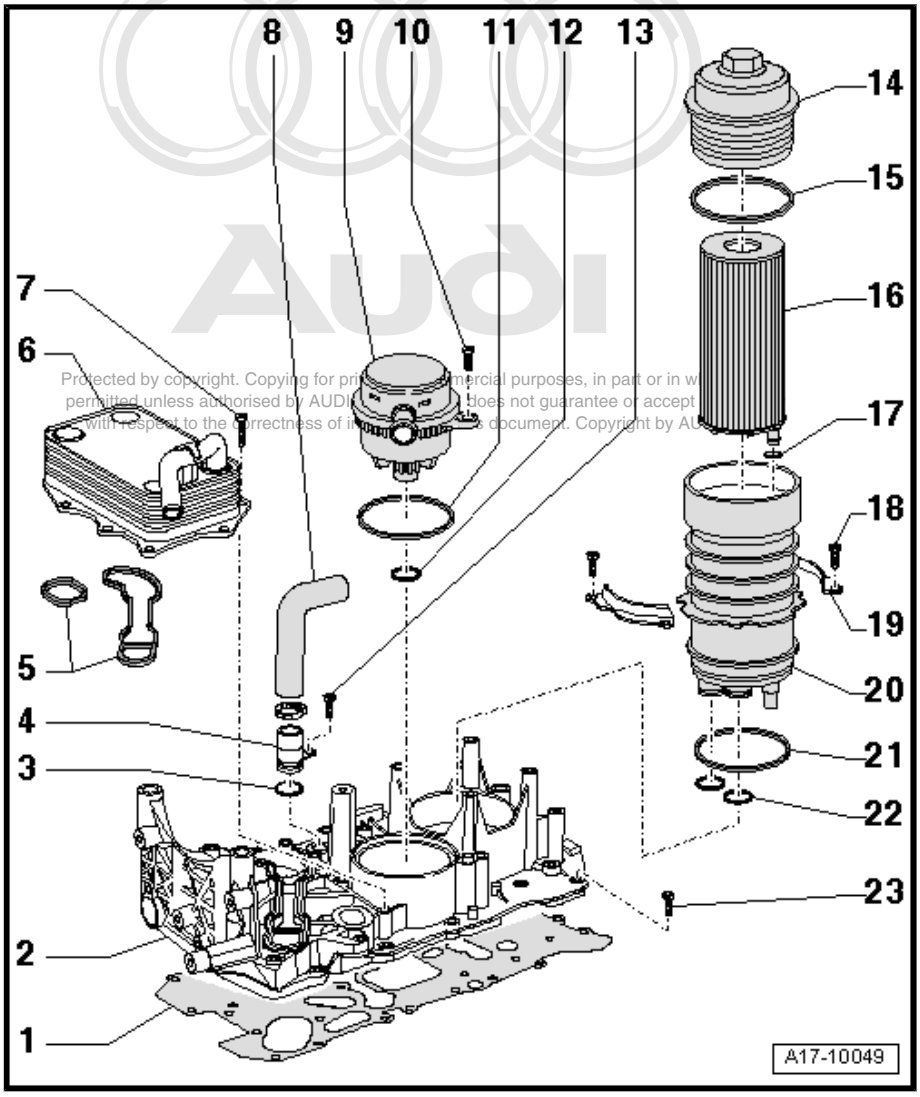

Protected by copyright. Copying for priv[illegible]mercial purposes, in part or in w[illegible] permitted unless authorised by AUDI [illegible] does not guarantee or accept [illegible] with respect to the correctness of i[illegible] document. Copyright by AU[illegible]

1 - Gasket
- ❑ Renew

2 - Mounting plate
- ❑ For oil cooler, pressure control valve of crank-case breather system and oil filter housing
- ❑ Removing and installing ⇒ page 208

3 - O-ring
- ❑ Renew

4 - Connection
- ❑ For coolant hose

5 - Gaskets
- ❑ Renew

6 - Oil cooler
- ❑ See note ⇒ page 182
- ❑ Removing and installing ⇒ page 204

7 - 8 Nm + 90° (1/4 turn) further
- ❑ Renew

8 - Coolant hose
- ❑ To exhaust gas recircu-lation cooler

9 - Pressure control valve
- ❑ For crankcase breather
- ❑ Removing and installing ⇒ page 206

10 - 6 Nm

11 - Seal
- ❑ Renew

12 - O-ring
- ❑ Renew

13 - 9 Nm

14 - Sealing cap, 35 Nm

15 - Seal
- ❑ Renew

16 - Oil filter element
- ❑ Detach from sealing cap ⇒ Item 14 (page 203)
- ❑ Removing and installing ⇒ Maintenance ; Booklet 404

17 - O-ring
- ❑ Renew

18 - 9 Nm

19 - Retaining clip

20 - Oil filter housing
- ❑ Removing and installing ⇒ page 205

21 - Seal

- ❑ Renew

22 - O-rings

- ❑ Renew

23 - 8 Nm + 90° (1/4 turn) further

- ❑ Renew
- ❑ Tightening sequence: work from inside outwards

1.9 Removing and installing oil cooler

Removing

– Drain off coolant ⇒ page 215 .

– Remove intake manifold (top section) ⇒ Rep. gr. 23 .

– Discharge the refrigerant system ⇒ Air conditioner system - with refrigerant R134a .

– Remove air conditioner compressor ⇒ Rep. gr. 87 .

– Unscrew coolant line from cylinder head (right-side) -arrow-.

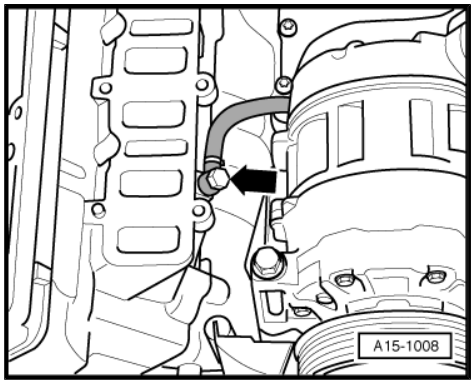

– Detach crankcase breather hose -arrow- from pressure control valve.

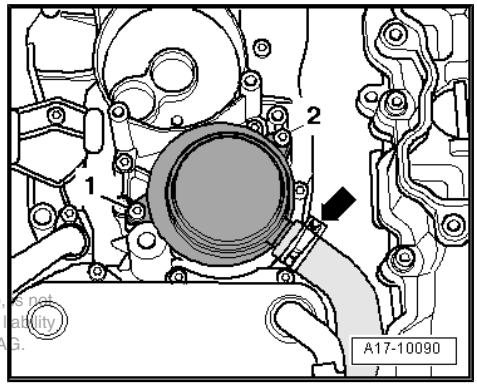

Note

Disregard items -1- and -2-.

Protected by copyright. Copying for private or commercial purposes, in part or in whole, is not permitted unless authorised by AUDI AG. AUDI AG does not guarantee or accept any liability with respect to the correctness of information in this document. Copyright by AUDI AG.

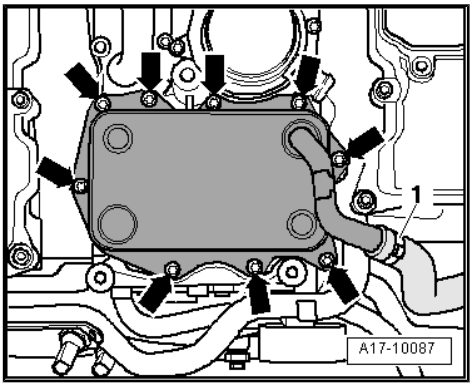

– Spread out rags round oil cooler to catch escaping oil.
– Unscrew the bolts -arrows- and remove oil cooler.

Installing

Installation is carried out in the reverse order; note the following:

Note

- *Renew gaskets and seals.*
- *Secure all hose connections with the correct type of hose clips (same as original equipment) ⇒ Electronic parts catalogue .*

– Install air conditioner compressor ⇒ Rep. gr. 87 .
– Charge the refrigerant system ⇒ Air conditioner system - with refrigerant R134a .
– Install intake manifold (top section) ⇒ Rep. gr. 23 .
– Fill up with engine oil and check engine oil level ⇒ Maintenance ; Booklet 404 .

Note

Do not reuse coolant.

– Fill cooling system ⇒ page 216 .

Tightening torques

Protected by copyright. Copying for private or commercial purposes, in part or in whole, is not permitted unless authorised by AUDI AG. AUDI AG does not guarantee or accept any liability with respect to the correctness of information in this document. Copyright by AUDI AG

Component	Nm
Oil cooler to mounting plate	8 + 90° 1)2)
Coolant line to cylinder head	15
• 1) Renew bolts. • 2) 90° = one quarter turn.	

1.10 Removing and installing oil filter housing

Removing

Note

Fit all heat insulation sleeves in the original position when installing.

– Drain off coolant ⇒ page 215 .
– Remove intake manifold (top section) ⇒ Rep. gr. 23 .

– Disconnect coolant hose from connections -1- and -2-.
– Loosen sealing cap -arrow- with 32 mm socket.
– Remove sealing cap together with oil filter element.
– Pull oil filter element off sealing cap.

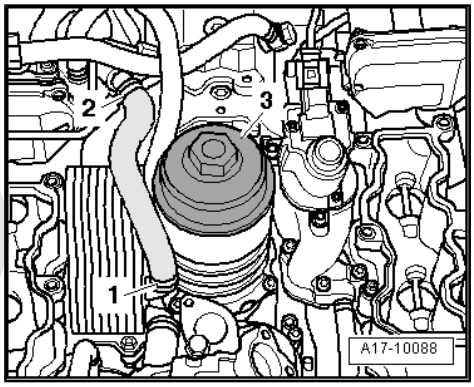

– Unbolt retaining clips -arrows-.
– Spread out rags round oil filter housing to catch escaping oil.
– Pull out oil filter housing.

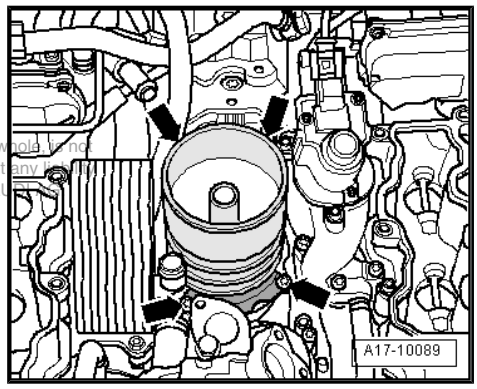

Installing

Protected by copyright. Copying for private or commercial purposes, in part or in whole, is not permitted unless authorised by AUDI AG. AUDI AG does not guarantee or accept any liability with respect to the correctness of information in this document. Copyright by AUDI AG.

Installation is carried out in the reverse order; note the following:

Note

- *Renew seals and O-rings.*
- *Fit all heat insulation sleeves in the original position when installing.*
- *Secure all hose connections with the correct type of hose clips (same as original equipment) ⇒ Electronic parts catalogue .*

– Install intake manifold (top section) ⇒ Rep. gr. 23 .

Note

Do not reuse coolant.

– Fill cooling system ⇒ page 216 .

Tightening torques

Component	Nm
Retaining clips for oil filter housing to mounting plate	9
Screw plug to mounting plate	35

1.11 Removing and installing pressure control valve for crankcase breather system

Removing

– Drain off coolant ⇒ page 215 .
– Remove intake manifold (top section) ⇒ Rep. gr. 23 .
– Remove high-pressure pump ⇒ Rep. gr. 23 .
– Remove exhaust gas recirculation cooler with change-over flap ⇒ page 320 .

– Unscrew coolant line from cylinder head (left-side) -arrow-.

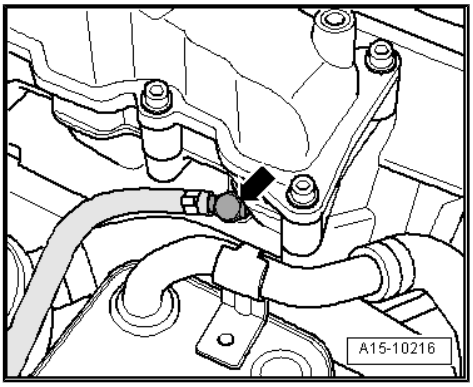

– Detach hose -3- from pressure control valve for crankcase breather system.
– Remove bolts -1- and -2-.
– Take out pressure control valve for crankcase breather system.

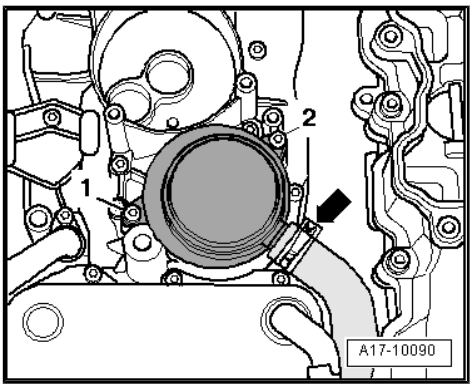

Installing

Installation is carried out in the reverse order; note the following:

Note

- *Renew seals and O-rings.*
- *Secure all hose connections with the correct type of hose clips (same as original equipment) ⇒ Electronic parts catalogue .*

– Install exhaust gas recirculation cooler with change-over flap ⇒ page 320 .
– Install high-pressure pump ⇒ Rep. gr. 23 .
– Install intake manifold (top section) ⇒ Rep. gr. 23 .

Note

Do not reuse coolant.

– Fill cooling system ⇒ page 216 .

Tightening torques

Component	Nm
Pressure control valve for crankcase breather system to mounting plate	6
Banjo bolt to cylinder head	15

Protected by copyright. Copying for private or commercial purposes, in part or in whole, is not permitted unless authorised by AUDI AG. AUDI AG does not guarantee or accept any liability with respect to the correctness of information in this document. Copyright by AUDI AG.

1.12 Removing and installing mounting plate for oil cooler, pressure control valve and oil filter housing

Removing

Note

Fit all heat insulation sleeves in the original position when installing.

- Drain off coolant ⇒ page 215 .
- Remove coolant pipes (front) ⇒ page 227 . Coolant pipe going to coolant pump remains in position.
- Remove intake manifold (top section) ⇒ Rep. gr. 23 .
- Discharge the refrigerant system ⇒ Air conditioner system - with refrigerant R134a .
- Remove air conditioner compressor ⇒ Rep. gr. 87 .
- Lower subframe for repair and assembly work ⇒ page 52 .
- Remove toothed belt for high-pressure pump ⇒ Rep. gr. 23 .
- Remove high-pressure pump ⇒ Rep. gr. 23 .
- Remove exhaust gas recirculation cooler with change-over flap ⇒ page 320 .
- Remove oil cooler ⇒ page 204 .

Protected by copyright. Copying for private or commercial purposes, in part or in whole, is not permitted unless authorised by AUDI AG. AUDI AG does not guarantee or accept any liability with respect to the correctness of information in this document. Copyright by AUDI AG.

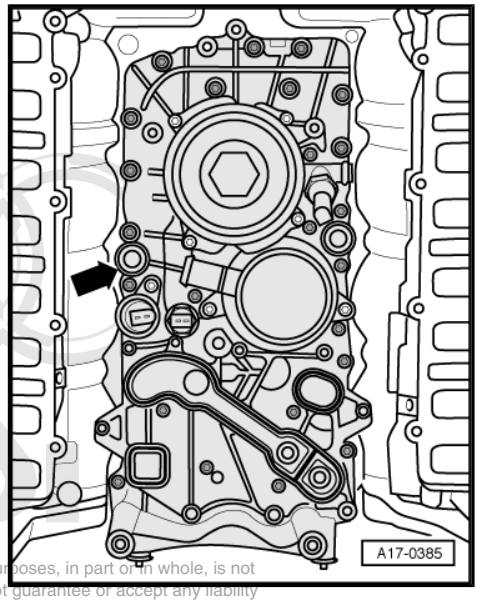

– Spread out rags round mounting plate to catch escaping oil.
– Unbolt mounting plate -arrow- at cylinder block.
– Lift off mounting plate.

Installing

Installation is carried out in the reverse order; note the following:

Note

- *Renew gaskets, seals and O-rings.*
- *Fit all heat insulation sleeves in the original position when installing.*

– Tighten bolts securing mounting plate from the inside outwards.
– Install oil cooler ⇒ page 204 .
– Install exhaust gas recirculation cooler with change-over flap ⇒ page 320 .
– Install high-pressure pump ⇒ Rep. gr. 23 .
– Install toothed belt for high-pressure pump ⇒ Rep. gr. 23 .
– Install air conditioner compressor ⇒ Rep. gr. 87 .
– Charge the refrigerant system ⇒ Air conditioner system - with refrigerant R134a .
– Install intake manifold (top section) ⇒ Rep. gr. 23 .
– Install coolant pipes (front) ⇒ page 227 .
– Fill up with engine oil and check engine oil level ⇒ Maintenance ; Booklet 404 .

Protected by copyright. Copying for private or commercial purposes, in part or in whole, is not permitted unless authorised by AUDI AG. AUDI AG does not guarantee or accept any liability with respect to the correctness of information in this document. Copyright by AUDI AG.

Note

Do not reuse coolant.

– Fill cooling system ⇒ page 216 .

Tightening torque

Component	Nm
Mounting plate to cylinder block	8 + 90° 1) 2)
• 1) Renew bolts. • 2) 90° = one quarter turn.	

1.13 Removing and installing oil pressure switch - F1-

Removing

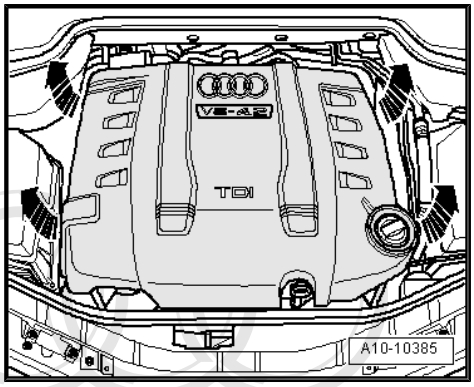

- Carefully pull engine cover panel off four retaining pins one after the other -arrows-.
- Pull off bonnet seal at lock carrier.

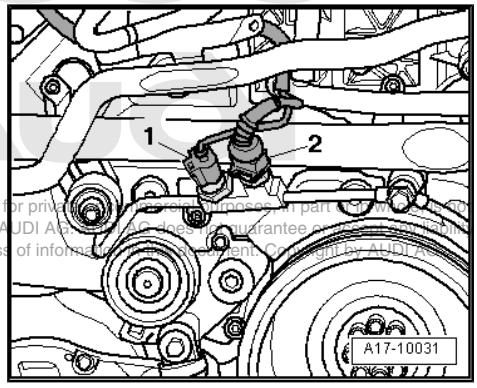

- Unplug electrical connector -2- at oil temperature sender - G8- .
- Unplug electrical connector -1- at oil pressure switch - F1- .
- Unscrew oil pressure switch - F1- .

Installing

Installation is carried out in the reverse order; note the following:

Protected by copyright. Copying for private or commercial purposes, in part or in whole, is not permitted unless authorised by AUDI AG. AUDI AG does not guarantee or assume any liability with respect to the correctness of information. Copyright by AUDI AG.

Note

Renew seal.

Tightening torque

Component	Nm
Oil pressure switch - F1- to oil line	20

1.14 Removing and installing oil temperature sender - G8-

Removing

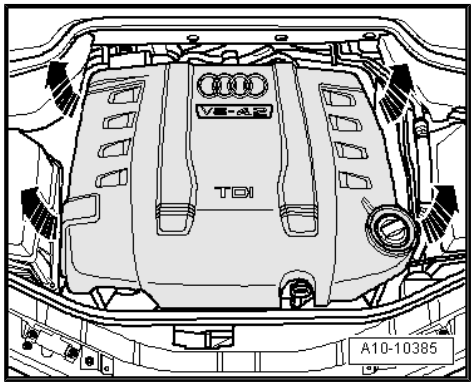

- Carefully pull engine cover panel off four retaining pins one after the other -arrows-.
- Pull off bonnet seal at lock carrier.

– Unplug electrical connector -2- at oil temperature sender - G8- .
– Unscrew oil temperature sender - G8- .

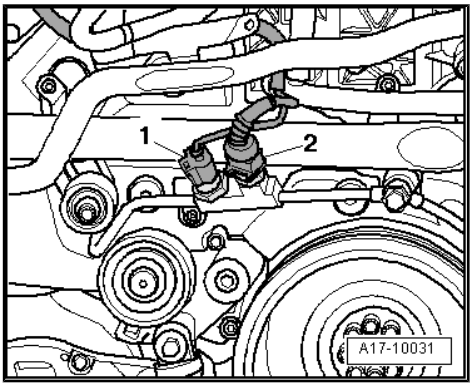

Note

Disregard -item 1-.

Installing

Installation is carried out in the reverse order; note the following:

Note

Renew seal.

Tightening torque

Component	Nm
Oil temperature sender - G8- to oil line	14

1.15 Checking oil pressure

Special tools and workshop equipment required

♦ Oil pressure tester - V.A.G 1342-

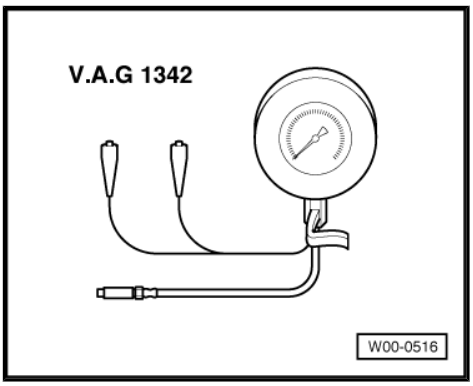

Procedure

- Oil level OK
- Engine oil temperature approx. 80 °C
– Remove oil temperature sender - G8- ⇒ page 210 .
– Connect oil pressure tester - V.A.G 1342- to threaded hole for oil temperature sender - G8- .
– Screw used oil pressure switch into threaded hole for oil pressure tester - V.A.G 1342- to seal hole.
– Start engine.
- Minimum oil pressure at idling speed: 0.8 bar.
- Oil pressure at 2000 rpm: at least 2.5 bar.

Protected by copyright. Copying for private or commercial purposes, in part or in whole, is not permitted unless authorised by AUDI AG. AUDI AG does not guarantee or accept any liability with respect to the correctness of information in this document. Copyright by AUDI AG.

Assembling

Installation is carried out in the reverse order; note the following:

– Install oil temperature sender - G8- ⇒ page 210 .

1.16 Engine oil

Refer to ⇒ Maintenance tables for engine oil capacity, oil specifications and viscosity grades.

1.17 Checking engine oil level

Check engine oil level ⇒ Maintenance ; Booklet 404 .

Note

The oil level must not be above max. mark on dipstick – danger of damage to catalytic converter.

Protected by copyright. Copying for private or commercial purposes, in part or in whole, is not permitted unless authorised by AUDI AG. AUDI AG does not guarantee or accept any liability with respect to the correctness of information in this document. Copyright by AUDI AG.

19 – Cooling

1 Removing and installing parts of cooling system

⇒ “1.1 Connection diagram - coolant hoses”, page 213

⇒ “1.2 Draining and filling cooling system”, page 215

⇒ “1.3 Coolant pump and thermostat - exploded view”, page 220

⇒ “1.4 Removing and installing coolant pump”, page 222

⇒ “1.5 Removing and installing thermostat”, page 225

⇒ “1.6 Checking thermostat”, page 227

⇒ “1.7 Removing and installing coolant pipes (front)”, page 227

⇒ “1.8 Removing and installing coolant pipe (left-side)”, page 232

⇒ “1.9 Removing and installing coolant pipe (right-side)”, page 237

⇒ “1.10 Removing and installing coolant pipe (rear)”, page 237

⇒ “1.11 Removing and installing coolant temperature sender G62 ”, page 240

⇒ “1.12 Radiator and radiator fans - exploded view”, page 240

⇒ “1.13 Removing and installing radiator”, page 242

⇒ “1.14 Removing and installing radiator cowl”, page 246

⇒ “1.15 Removing and installing radiator fans”, page 247

⇒ “1.16 Checking cooling system for leaks”, page 248

1.1 Connection diagram - coolant hoses

Protected by copyright. Copying for private or commercial purposes, in part or in whole, is not permitted unless authorised by AUDI AG. AUDI AG does not guarantee or accept any liability with respect to the correctness of information in this document. Copyright by AUDI AG.

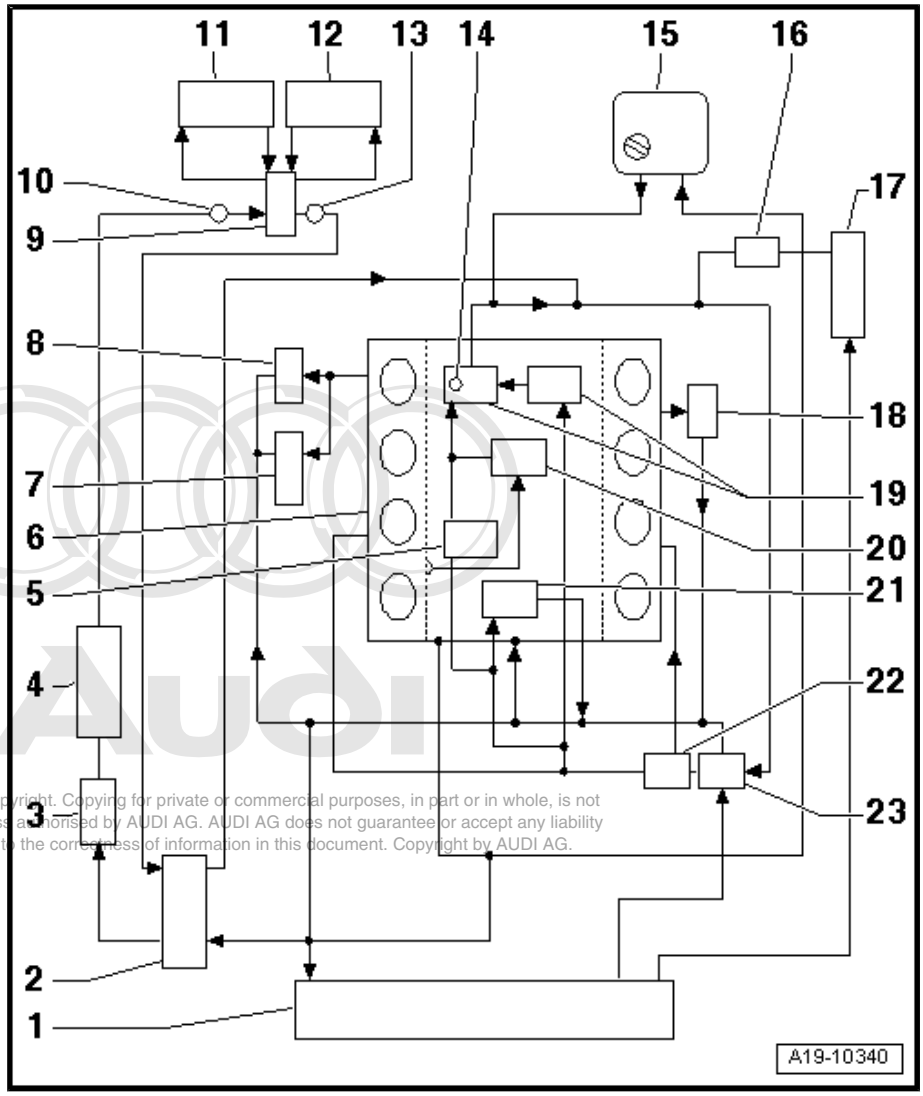

Protected by copyright. Copying for private or commercial purposes, in part or in whole, is not permitted unless authorised by AUDI AG. AUDI AG does not guarantee or accept any liability with respect to the correctness of information in this document. Copyright by AUDI AG.

1 - Radiator
- ❑ Removing and installing ⇒ page 242
- ❑ If renewed, refill system with fresh coolant

2 - Heater coolant shut-off valve - N279-

3 - Circulation pump - V55-

4 - Auxiliary heater

5 - Changeover flap for exhaust gas recirculation

6 - Cylinder head/cylinder block
- ❑ If renewed, refill system with fresh coolant

7 - Alternator

8 - Turbocharger (right-side)

9 - Pump/valve unit

10 - Bleeder screw

11 - Heat exchanger (right-side)
- ❑ If renewed, refill system with fresh coolant

12 - Heat exchanger (left-side)
- ❑ If renewed, refill system with fresh coolant

13 - Bleeder screw

14 - Bleeder screw

15 - Expansion tank
- ❑ Checking pressure relief valve in filler cap ⇒ page 249

16 - Thermostat
- ❑ For ATF cooler

17 - ATF cooler

18 - Turbocharger (left-side)

19 - Connection for exhaust gas recirculation (left and right)

20 - Exhaust gas recirculation cooler

21 - Oil cooler
- ❑ If renewed, refill system with fresh coolant

22 - Coolant pump
- ❑ Removing and installing ⇒ page 222

23 - Thermostat
- ❑ Removing and installing ⇒ page 225

1.2 Draining and filling cooling system

Special tools and workshop equipment required

- Adapter for cooling system tester - V.A.G 1274/8-
- Cooling system charge unit - VAS 6096-
- Drip tray for workshop hoist - VAS 6208-
- Hose clip pliers - VAS 6362-
- Refractometer - T10007 A-
- Safety goggles
- Protective gloves

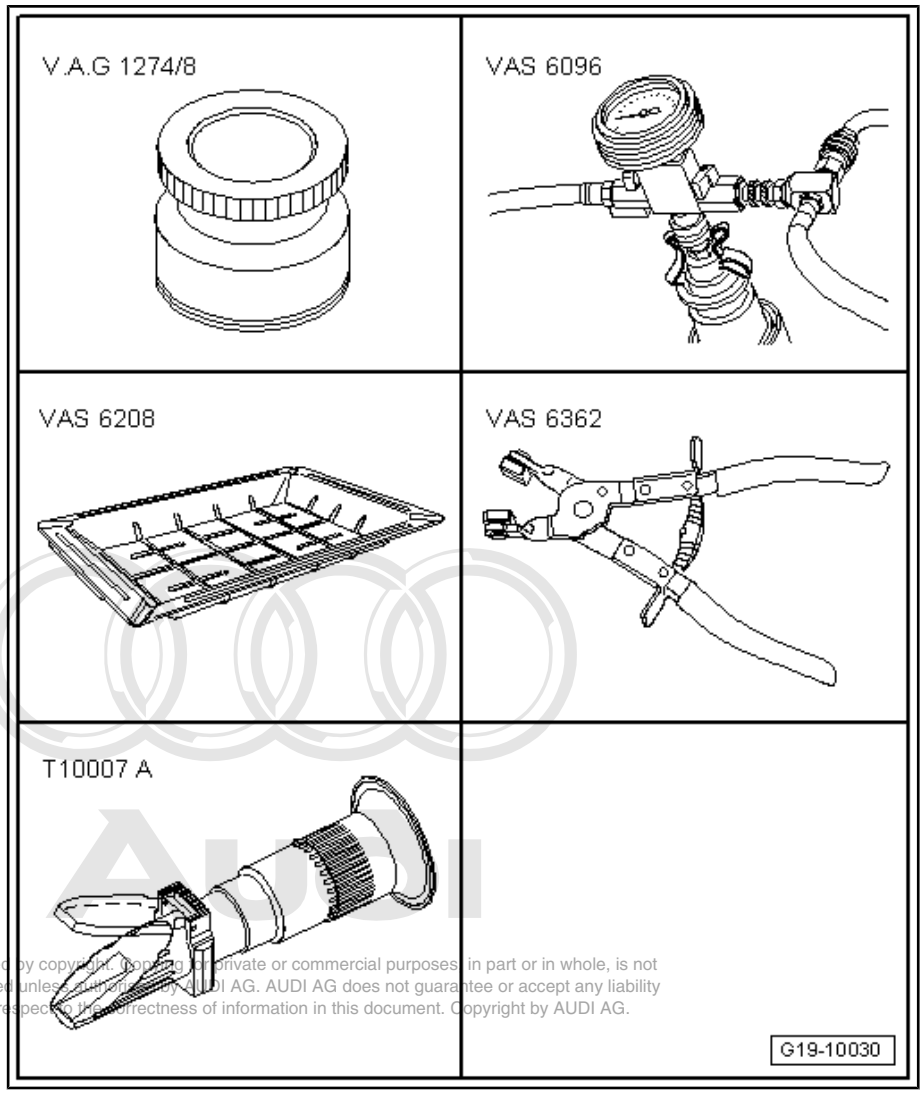

Protected by copyright. Copying for private or commercial purposes, in part or in whole, is not permitted unless authorized by AUDI AG. AUDI AG does not guarantee or accept any liability with respect to the correctness of information in this document. Copyright by AUDI AG.

Draining

Note

Collect drained coolant in a clean container for re-use or disposal.

– Remove cover above coolant expansion tank -arrows-.

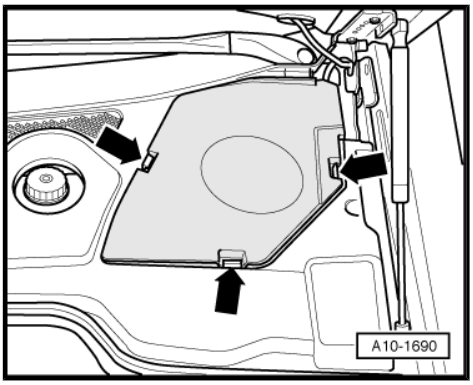

WARNING

Hot steam or hot coolant can escape when expansion tank is opened; cover filler cap with cloth and open carefully.

– Open filler cap on coolant expansion tank.

– Open quick-release fasteners -1- and remove noise insulation (front).

– Place drip tray for workshop hoist - VAS 6208- under engine.

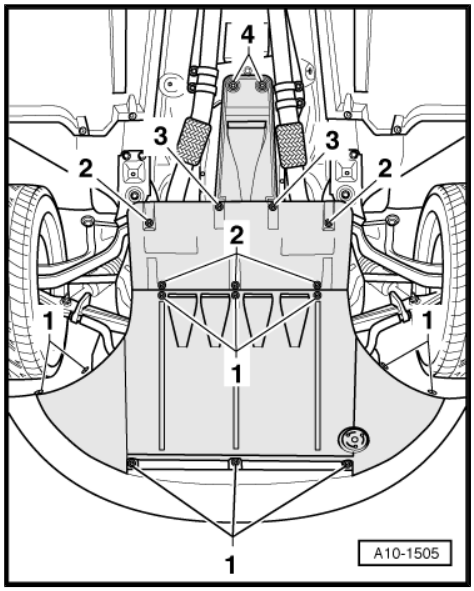

– Remove drain plug -arrow- and let coolant drain.

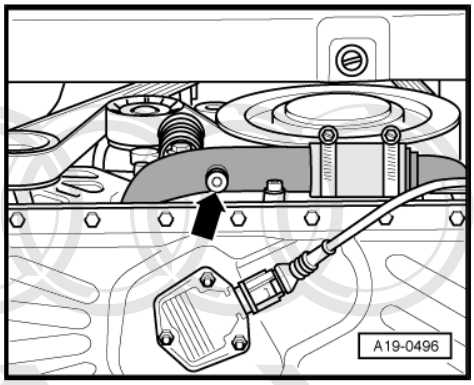

– Disconnect coolant hose -arrow- from coolant pipe and drain off remaining coolant.

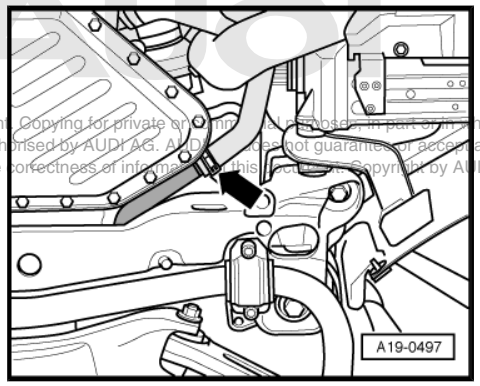

Filling

Caution

Always use distilled water for mixing coolant additives as this ensures optimum corrosion protection.

Protected by copyright. Copying for private or commercial purposes, in part or in whole, is not permitted unless authorised by AUDI AG. AUDI AG does not guarantee or accept any liability with respect to the correctness of information in this document. Copyright by AUDI AG.

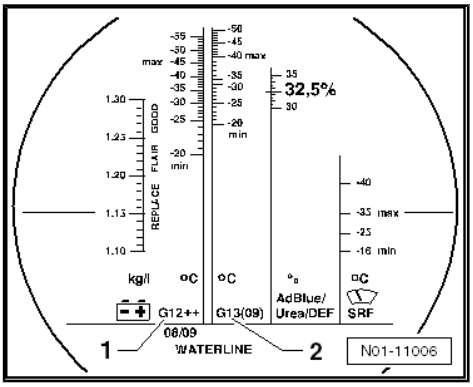

Note

- *The effectiveness of the coolant is greatly influenced by the quality of the water with which it is mixed. Because water may contain different substances depending on the country or even the region, the water quality to be used for cooling systems has been specified. Distilled water meets all the requirements and is therefore recommended for use when topping up or filling up with coolant.*
- *Use only coolant additives listed in the ⇒ Electronic parts catalogue (ETKA) . Other coolant additives could seriously impair in particular the anti-corrosion properties. The resulting damage could lead to loss of coolant and consequently to serious engine damage.*
- *Coolant with the recommended mixture ratio prevents frost and corrosion damage and stops scaling. At the same time it raises the boiling point of the fluid in the system. For this reason the cooling system must be filled all year round with the correct coolant additive.*
- *Because of its high boiling point, the coolant improves engine reliability under heavy loads, particularly in countries with tropical climates.*
- *The refractometer - T10007A- MUST be used to determine the current level of frost protection.*
- *The mixture must guarantee frost protection down to -25 °C (in countries with arctic climate: down to -36 °C). The amount of antifreeze can only be increased if greater frost protection is required in very cold climates. This must only be up to -48 °C, however, as otherwise the cooling efficiency of the coolant is impaired.*
- *The coolant concentration must not be reduced by adding water even in warmer seasons and in warmer countries. Frost protection must be provided to at least -25 °C.*
- *Read off the level of frost protection on the scale for the relevant coolant additive.*
- *The temperature indicated on the refractometer - T10007A- corresponds to the temperature at which the first ice crystals can form in the coolant.*
- *Do not reuse coolant.*
- *Only use water/coolant additive as a lubricant for coolant hoses.*

Copyright. Copying for private or commercial purposes, in part or in whole, is not permitted unless authorised by AUDI AG. AUDI AG does not guarantee or accept any liability with respect to the correctness and completeness of this document by AUDI AG.

Procedure:

– Fit coolant hose -arrow- onto coolant pipe.

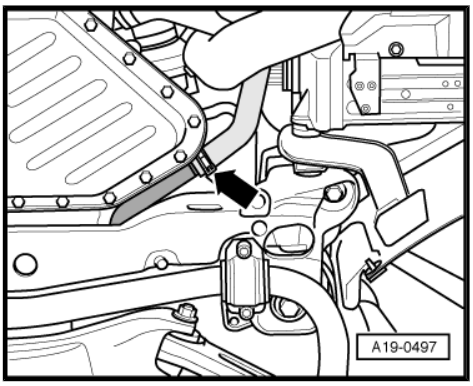

– Install drain plug -arrow- with new seal.

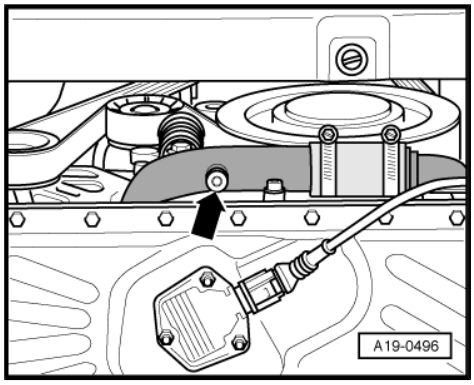

– Fill reservoir of -VAS 6096- with at least 17 litres of premixed coolant (according to recommended ratio):

• Radiator antifreeze/anti-corrosion agent (40 %) and water (60 %) for frost protection to –25 °C.

• Radiator antifreeze/anti-corrosion agent (50 %) and water (50 %) for frost protection to –35 °C.

• Radiator antifreeze/anti-corrosion agent ⇒ Electronic parts catalogue

– Screw adapter for cooling system tester - V.A.G 1274/8- onto coolant expansion tank.

– Attach cooling system charge unit - VAS 6096- to adapter - V.A.G 1274/8- .

– Run vent hose -1- into a small container -2-. (The vented air draws along a small amount of coolant, which should be collected.)

– Close the two valves -A- and -B- by setting lever at right angle to direction of flow.

– Connect hose -3- to compressed air.

• Pressure: 6 ... 10 bar.

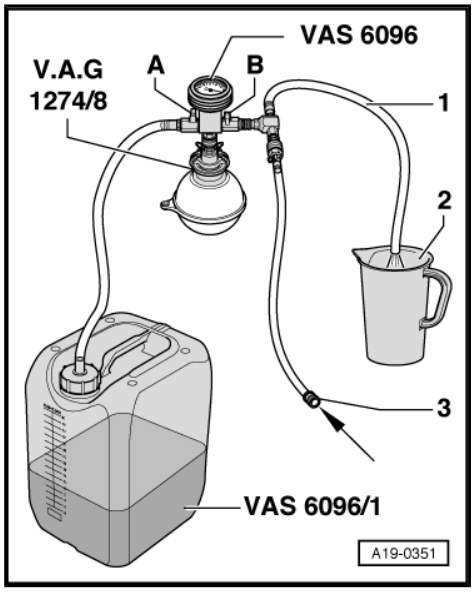

Protected by copyright. Copying for private or commercial purposes, in part or in whole, is not permitted unless authorised by AUDI AG. AUDI AG does not guarantee or accept any liability with respect to the correctness of information in this document. Copyright by AUDI AG.

– Open valve -B- by setting lever in direction of flow.

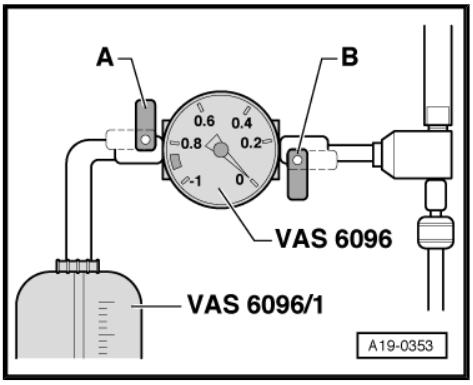

The suction jet pump generates a partial vacuum in the cooling system.

- The needle on the gauge should move into the green zone.

– Also briefly open valve -A- (turn lever in direction of flow) so that hose on charge unit reservoir -VAS 6096- can fill with coolant.

– Close valve -A- again.

– Leave valve -B- open for another 2 minutes.

- The suction jet pump will continue generating a vacuum in the cooling system.
- The needle on the gauge should remain in the green zone.

– Close valve -B-.

- The needle on the gauge should stop in the green zone. The vacuum level in the cooling system is then sufficient for subsequent filling.

If the needle does not reach the green zone, repeat the process.

If the vacuum level drops, there is a leak in the cooling system.

– Detach compressed air hose.

– Open valve -A-.

The vacuum in the cooling system causes the coolant to be drawn out of the reservoir for cooling system charge unit -VAS 6096- ; the cooling system is then filled.

– Detach cooling system charge unit - VAS 6096- from expansion tank.

– Carefully pull engine cover panel off four retaining pins one after the other -arrows-.

Protected by copyright. Copying for priva
permitted unless authorised by AUDI A
with respect to the correctness of in

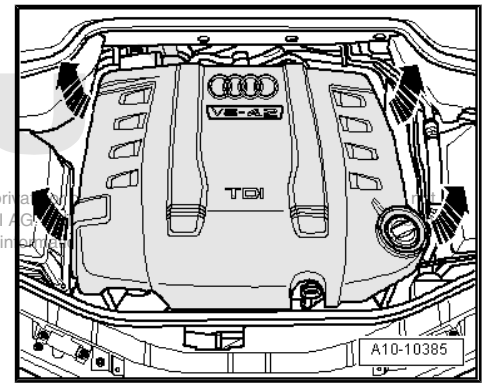

– Unscrew bleeder screw -arrow-.

– Fill up with coolant until it flows out at bleeder hole free of bubbles.

– Close bleeder screw.

– If fitted, unscrew bleeder screw on radiator and fill up with coolant until it comes out at bleeder screw.

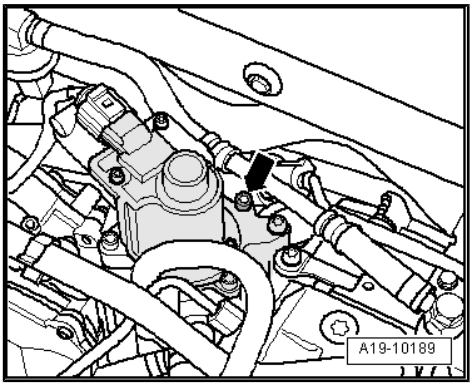

– Pull off rubber seal -1- on plenum chamber covers.
– Detach plenum chamber cover -2-.

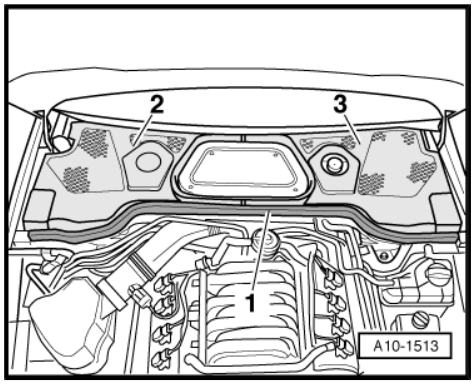

Note

Disregard -item 3-.

– Open bleeder screws -arrows-.
– Fill up with coolant until it flows out at bleeder holes in coolant hoses.
– Close the bleeder screws.
– On vehicles with auxiliary heater, switch heater on (for about 30 seconds) and then off again.
– Tighten filler cap on expansion tank.
– Start engine.
– Set heater/air conditioner on both sides to “HI”.
– Run the engine for 3 minutes at 2000 rpm.
– Allow the engine to run at idling speed until the two large coolant hoses at main radiator become warm.
– Run the engine for 1 minute at 2000 rpm.
– Switch off ignition and allow engine to cool down.

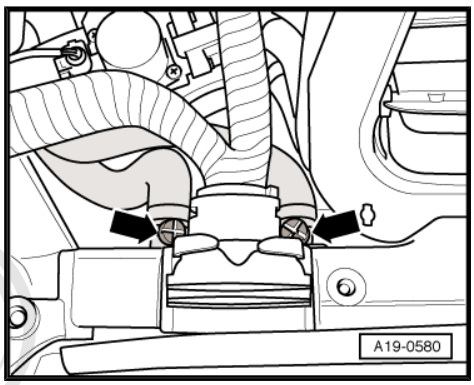

– Check coolant level.

Protected by copyright. Copying for private or commercial purposes, in part or in whole, is not permitted unless authorised by AUDI AG. AUDI AG does not guarantee or accept any liability with respect to the correctness of information in this document. Copyright by AUDI AG.

- The coolant level must be at the MAX marking when the engine is cold.
- The coolant level can be above the MAX marking when the engine is warm.

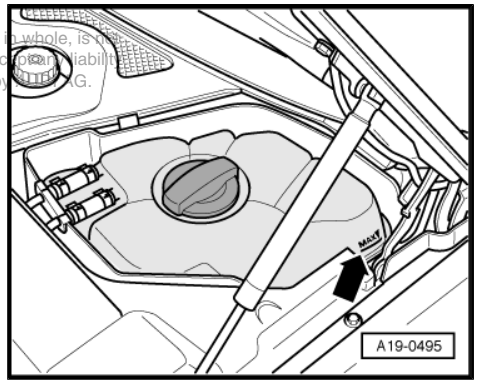

Tightening torques

Component	Nm
Drain plug to coolant pipe	15
Bleeder screw to connection for exhaust gas recirculation	9

1.3 Coolant pump and thermostat - exploded view

Note

The arrow markings on coolant pipes and on ends of hoses must align.

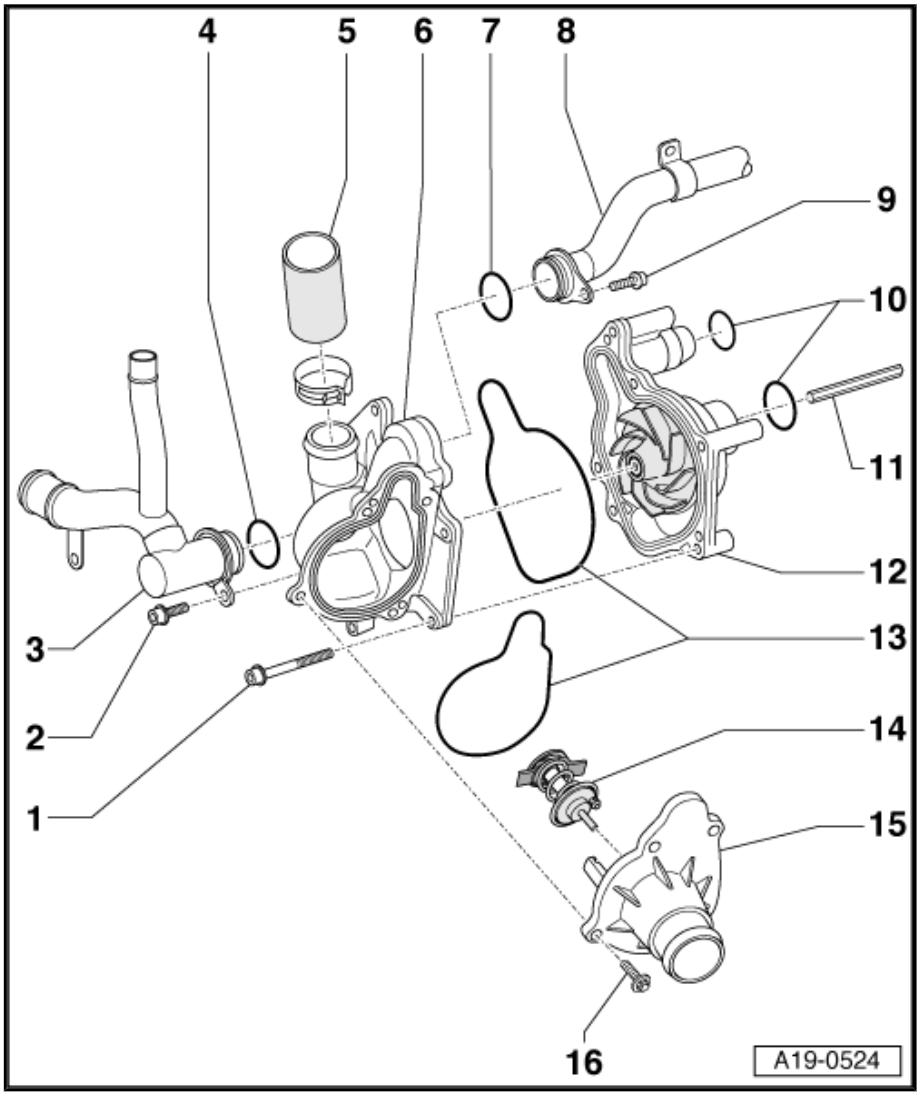

1 - 9 Nm

2 - 9 Nm

3 - Coolant pipe (front)
- ❑ Removing and installing ⇒ page 227

4 - O-ring
- ❑ Renew

5 - Coolant hose

6 - Housing
- ❑ For coolant pump
- ❑ Removing and installing ⇒ page 222

7 - O-ring
- ❑ Renew

8 - Coolant pipe (left-side)
- ❑ Removing and installing ⇒ page 232

9 - 9 Nm

10 - O-rings
- ❑ Renew

11 - Drive shaft
- ❑ For coolant pump

12 - Coolant pump
- ❑ Removing and installing ⇒ page 222

13 - Seals
- ❑ Renew

14 - Thermostat
- ❑ Spare part available only with -item 15-
- ❑ Checking ⇒ page 227
- ❑ Installation position ⇒ page 221

15 - Thermostat housing
- ❑ Spare part available only with -item 14-
- ❑ Removing and installing ⇒ page 225

16 - 9 Nm

Installation position of thermostat

- Vent valve -arrow- faces upwards.

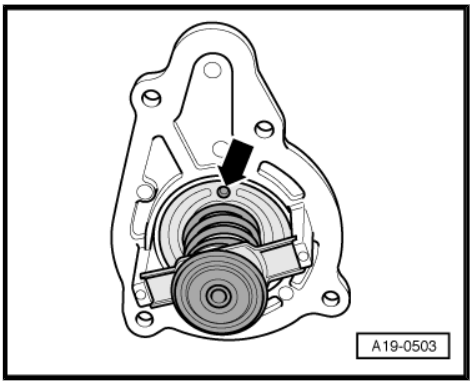

Protected by copyright. Copying for private or commercial purposes, in part or in whole, is not permitted unless authorised by AUDI AG. AUDI AG does not guarantee or accept any liability with respect to the correctness of information in this document. Copyright by AUDI AG.

1.4 Removing and installing coolant pump

Special tools and workshop equipment required

- Drip tray for workshop hoist - VAS 6208-

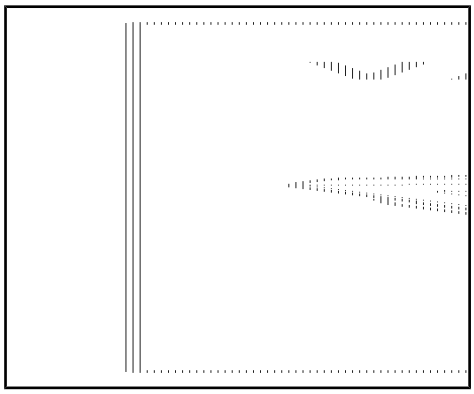

Removing

Note

All cable ties which are released or cut open when removing must be fitted in the same position when installing.

– Remove radiator ⇒ page 242 .

– Remove radiator cowl ⇒ page 246 .

– Remove coolant pipes (front) ⇒ page 227 .

– Unplug electrical connector -2- going to charge pressure sender - G31- .

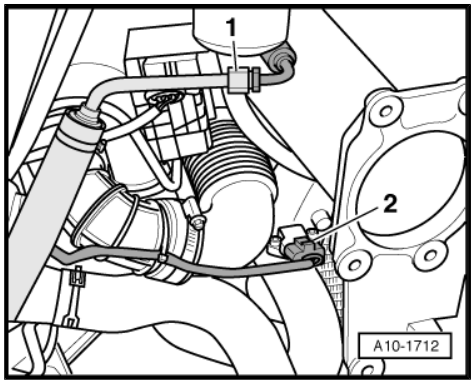

Note

Disregard -item 1-.

– Remove bolts -arrows- and detach bracket for charge air cooler.

– Take off charge air cooler -1- (left-side).

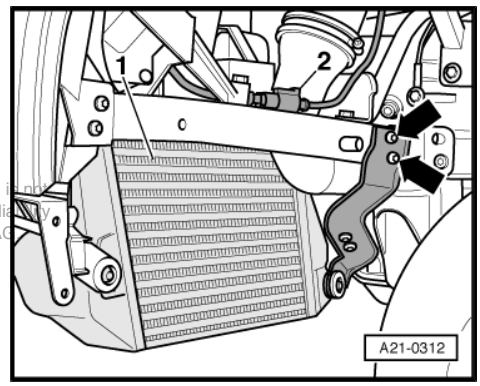

Note

Disregard -item 2-.

Protected by copyright. Copying for private or commercial purposes, in part or in whole, is not permitted unless authorised by AUDI AG. AUDI AG does not guarantee or accept any liability with respect to the correctness of information in this document. Copyright by AUDI AG

– Unscrew securing bolt -2- and securing bolt -4-.
– Loosen hose clips -1- and -3- and remove air intake hose between air cleaner housing and turbocharger (left-side).

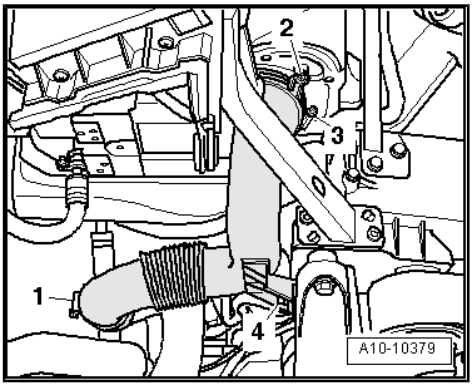

– Unplug electrical connectors -1- and -4-.
– Remove crankcase breather hose -2-.
– Detach air hoses -3- and -5- from turbocharger.

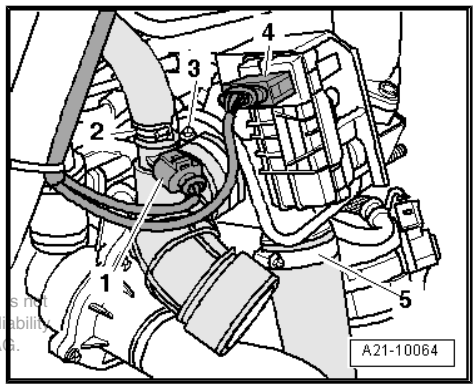

Protected by copyright. Copying for private or commercial purposes, in part or in whole, is not permitted unless authorised by AUDI AG. AUDI AG does not guarantee or accept any liability with respect to the correctness of information in this document. Copyright by AUDI AG.

– Unscrew retaining clip -arrow- for power steering hydraulic line at sump.

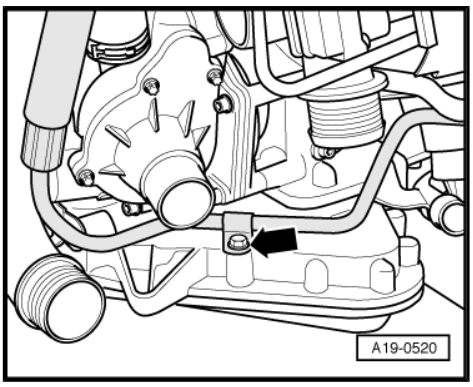

– Unscrew bolts -arrows- and remove thermostat housing.

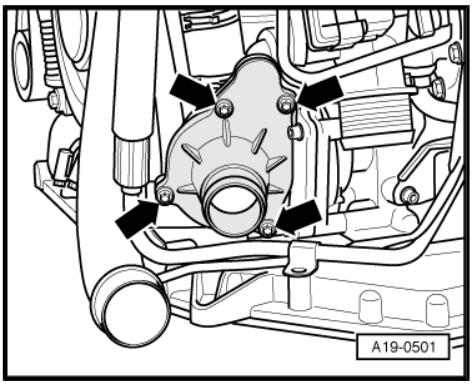

– Remove bolts -arrows-.
– Place drip tray for workshop hoist - VAS 6208- under engine.
– Pull off coolant pump housing forwards (note the drive shaft for coolant pump).

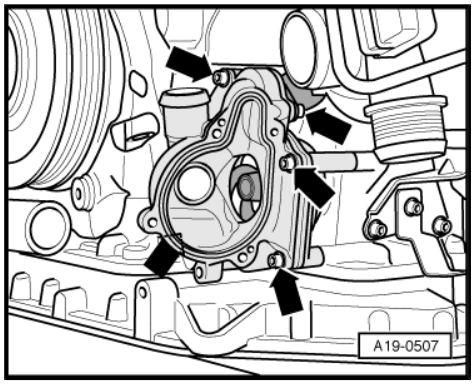

– Remove drive shaft -arrow- for coolant pump from the guide on oil pump.

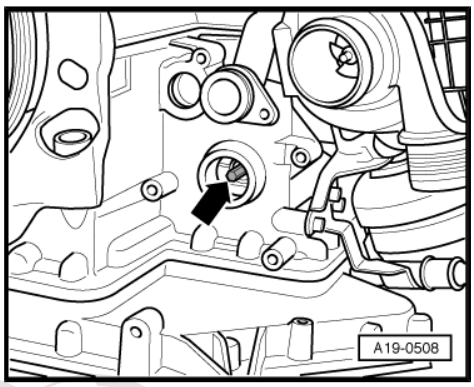

– Remove bolts -3- and -4-.
– Remove coolant pump -1- from housing -2-.

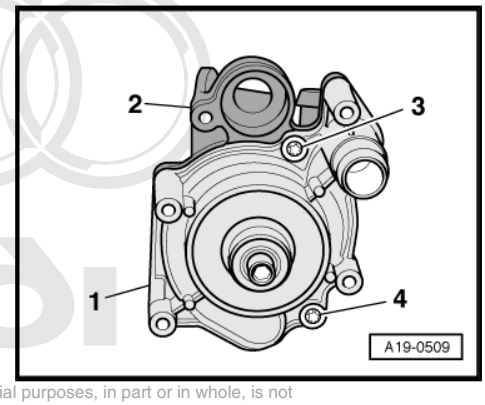

Installing

Installation is carried out in the reverse order; note the following:

Note

- *Renew seals and O-rings.*
- *Hose connections and hoses for charge air system must be free of oil and grease before assembly.*
- *Secure all hose connections with the correct type of hose clips (same as original equipment) ⇒ "Electronic parts catalogue".*
- *Fit all cable ties in the original positions when installing.*

Protected by copyright. Copying for private or commercial purposes, in part or in whole, is not permitted unless authorised by AUDI AG. AUDI AG does not guarantee or accept any liability with respect to the correctness of information in this document. Copyright by AUDI AG.

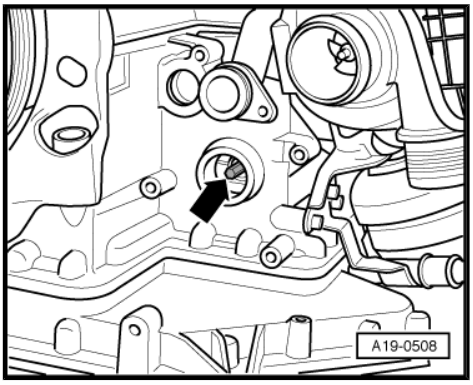

– Insert drive shaft -arrow- for coolant pump in the mounting for the oil pump on engine.
– Fit coolant pump in mounting on sump (top section).

Note

To fit the drive flange onto the hexagon flats of the drive shaft, use your finger to turn the impeller of coolant pump until the coolant pump can be pressed on all the way.

– Install thermostat ⇒ page 225 .
– Install coolant pipes (front) ⇒ page 227 .
– Install poly V-belt ⇒ page 60 .
– Install radiator cowl ⇒ page 246 .
– Install radiator ⇒ page 242 .

Note

Do not reuse coolant.

– Fill cooling system ⇒ page 216 .

Tightening torques

Component	Nm
Coolant pump to housing	9
Coolant pump housing to sump (top section)	9
Coolant pipe (left-side) to coolant pump	9
Thermostat housing to coolant pump housing	9
Retaining clip for hydraulic line to sump	9
Bracket for charge air cooler to body	9
Air pipe to engine cross member	9
Hose clips (9 mm wide)	3
Hose clips (13 mm wide)	5.5

Protected by copyright. Copying for private or commercial purposes, in part or in whole, is not permitted unless authorised by AUDI AG. AUDI AG does not guarantee or accept any liability with respect to the correctness of information in this document. Copyright by AUDI AG.

1.5 Removing and installing thermostat

Removing

– Drain off coolant ⇒ page 215 .
– Remove air hose (front left) -arrows-.

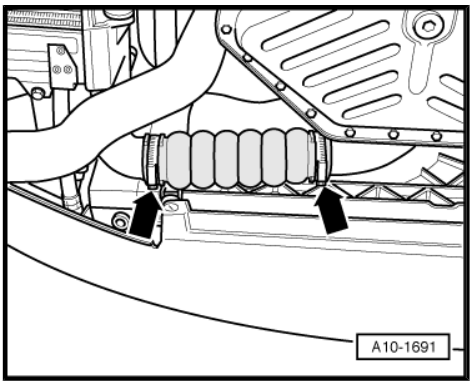

– Remove bottom coolant hose -1- going to thermostat housing from radiator by pulling off retaining clip.

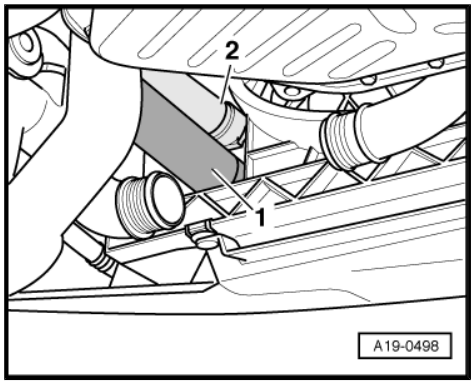

Note

Disregard -item 2-.

– Unscrew retaining clip -arrow- for power steering hydraulic line at sump.

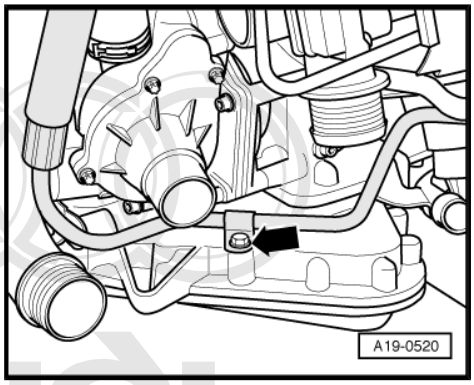

Protected by copyright. Copying for private or commercial purposes, in part or in whole, is not permitted unless authorised by AUDI AG. AUDI AG does not guarantee or accept any liability with respect to the correctness of information in this document. Copyright by AUDI AG.

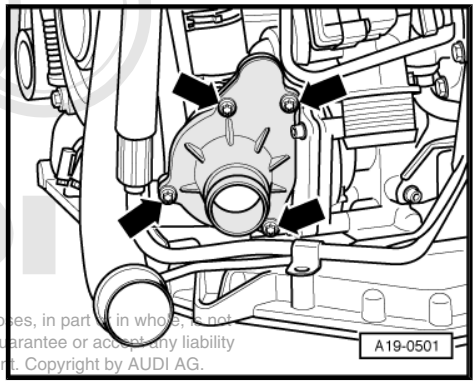

– Remove bolts -arrows-.

– Remove thermostat housing with thermostat.

Installing

Installation is carried out in the reverse order; note the following:

Note

- *Renew gaskets and seals.*
- *Hose connections and hoses for charge air system must be free of oil and grease before assembly.*
- *Secure all hose connections with the correct type of hose clips (same as original equipment) ⇒ Electronic parts catalogue .*

Protected by copyright. Copying for private or commercial purposes, in part or in whole, is not permitted unless authorised by AUDI AG. AUDI AG does not guarantee or accept any liability with respect to the correctness of information in this document. Copyright by AUDI AG.

– Clean and smoothen sealing surface.

– Connect coolant hose with plug-in connector to radiator ⇒ page 242 .

Note

Do not reuse coolant.

– Fill cooling system ⇒ page 216 .

Tightening torques

Component	Nm
Thermostat housing to coolant pump housing	9
Retaining clip for hydraulic line to sump	10
Hose clips (9 mm wide)	3
Hose clips (13 mm wide)	5.5

1.6 Checking thermostat

– Heat up the removed thermostat housing in hot water.

Starts to open	Fully open	Opening travel
approx. 87 °C	approx. 102 °C [1]	at least 8 mm [2]

- [1] Cannot be tested.
- [2] At a temperature of 95°C.

1.7 Removing and installing coolant pipes (front)

Special tools and workshop equipment required

♦ Drip tray for workshop hoist - VAS 6208-

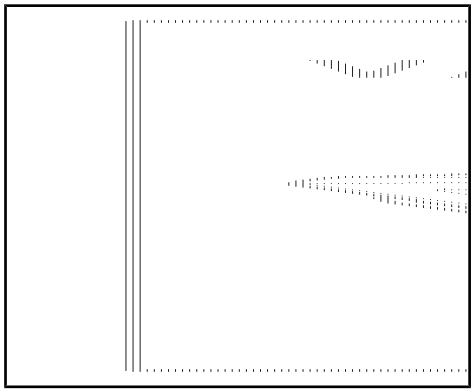

♦ Hose clip pliers - VAS 6362-

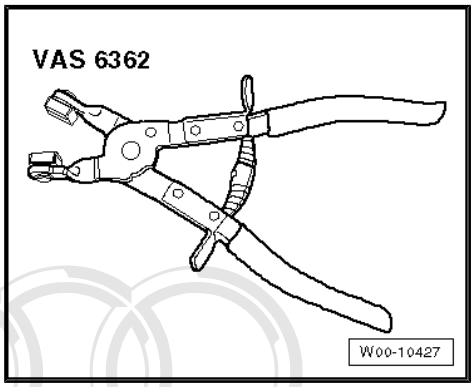

Removing

Note

All cable ties which are released or cut open when removing must be fitted in the same position when installing.

– Remove radiator ⇒ page 242 .

– Remove radiator cowl ⇒ page 246 .

Protected by copyright. Copying for private or commercial purposes, in part or in whole, is not permitted unless authorised by AUDI AG. AUDI AG does not guarantee or accept any liability with respect to the correctness of information in this document. Copyright by AUDI AG.

– Remove bolts -arrows- and detach top section of air cleaner housing (right-side).

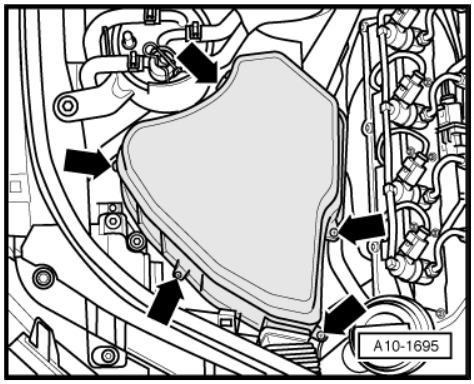

– Move electrical wiring clear of air pipe (front left).
– Remove air pipe (front left) -arrows-.

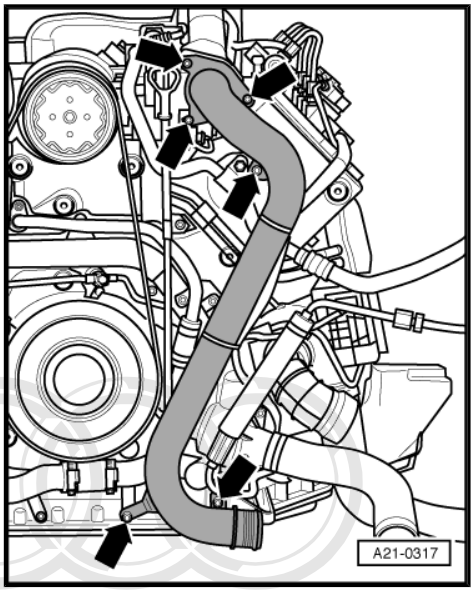

– Move electrical wiring clear of air pipe (front right).
– Remove air pipe (front right) -arrows-.

Protected by copyright. Copying for private or commercial purposes, in part or in whole, is not permitted unless authorised by AUDI AG. AUDI AG does not guarantee or accept any liability with respect to the correctness of information in this document. Copyright by AUDI AG.

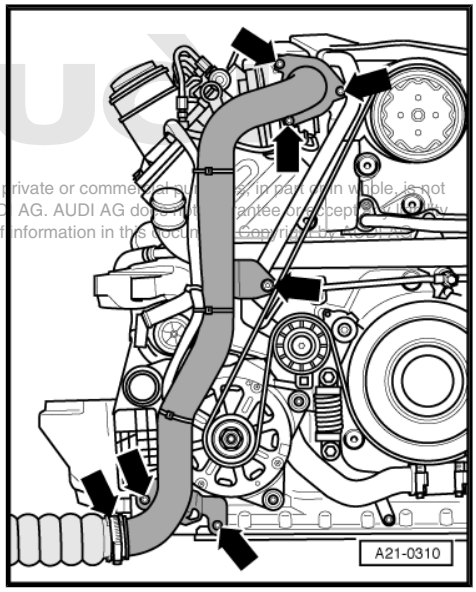

– Unplug electrical connectors -1- and -2-.
– Move wiring clear.

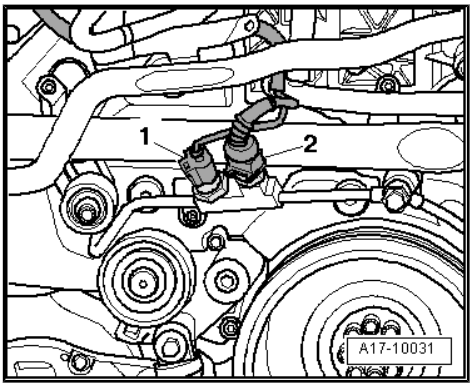

Note

Before removing, mark direction of rotation of poly V-belt with chalk or felt-tip pen. If the belt runs in the opposite direction when it is refitted, this can cause breakage.

– To slacken poly V-belt, pivot belt tensioner in direction of -arrow- (use a lever with 3/8" drive).

– Remove poly V-belt from alternator pulley.

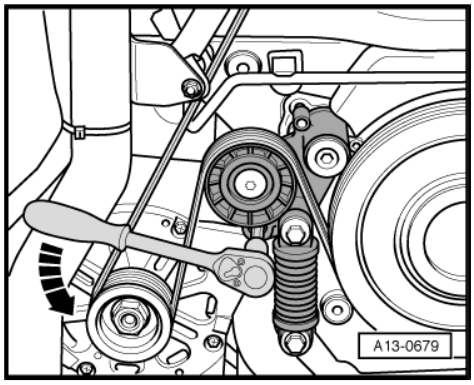

– Prise off cap for idler roller.

– Unscrew bolt -1- and detach idler roller.

– Remove bolt -2-.

– Pull the guide tube for oil dipstick out upwards.

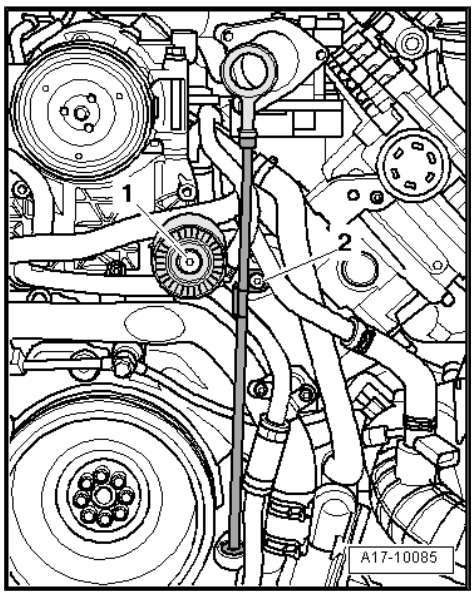

Note

It is not possible to remove guide tube for oil dipstick from engine compartment at this stage.

– Remove bolts -1- and -2-.

– Detach crankcase breather pipe from hoses -arrows-.

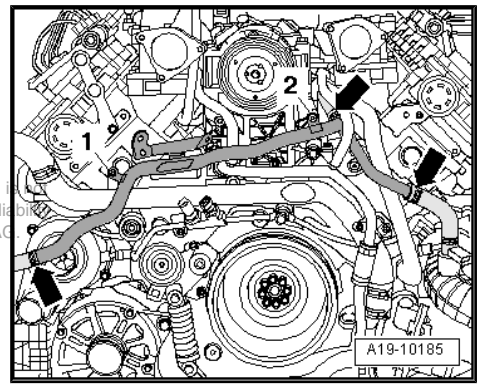

Note

It is not possible to remove crankcase breather pipe from engine compartment at this stage.

Protected by copyright. Copying for private or commercial purposes, in part or in whole, is not permitted unless authorised by AUDI AG. AUDI AG does not guarantee or assume any liability with respect to the correctness of information in this document. Copyright by AUDI AG.

– Remove bolts -1- and -2-.

– Detach coolant pipe from hoses -arrows-.

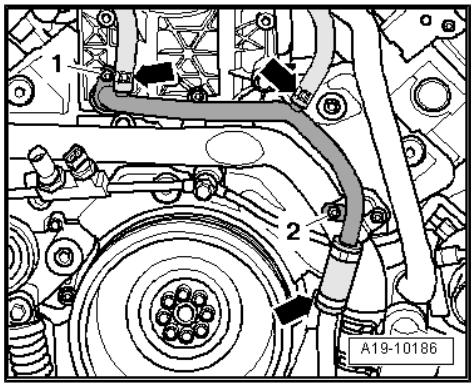

– Remove bolt -1-.
– Remove banjo bolt -2-.

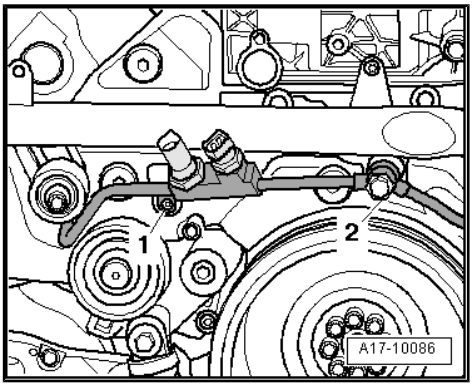

Note

The oil supply lines remain attached to the engine.

– Remove bolt -1-.
– Detach idler roller together with spacer sleeves.
– Remove bolts -2- and -3-.
– Detach coolant pipe from hoses -arrows-.

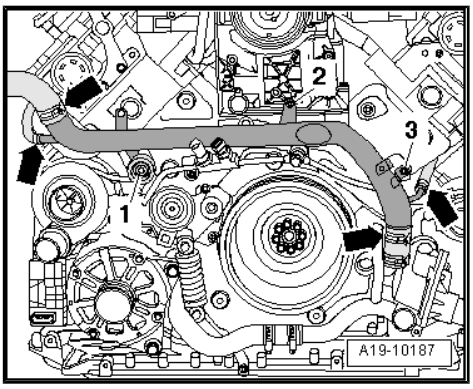

– Unscrew retaining clip -arrow- for power steering hydraulic line at sump.

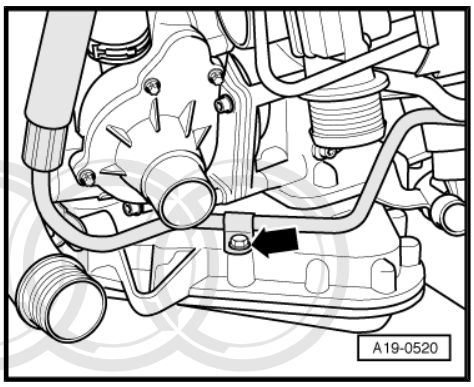

Protected by copyright. Copying for private or commercial purposes, in part or in whole, is not permitted unless authorised by AUDI AG. AUDI AG does not guarantee or accept any liability with respect to the correctness of information in this document. Copyright by AUDI AG.

– Remove coolant pipe -arrows-.

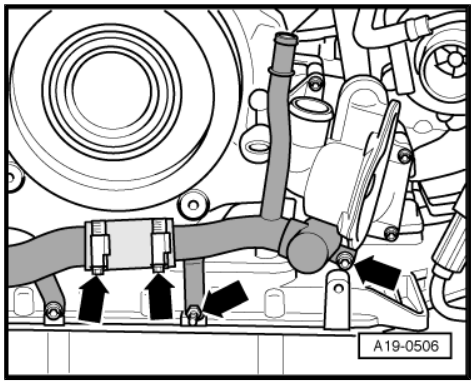

Installing

Installation is carried out in the reverse order; note the following:

Note

- *Renew gaskets, seals and O-rings.*
- *Hose connections and hoses for charge air system must be free of oil and grease before assembly.*
- *Secure all hose connections with the correct type of hose clips (same as original equipment) ⇒ Electronic parts catalogue .*
- *Fit all cable ties in the original positions when installing.*

– Clean and smoothen sealing surface for O-ring as required before installing.

– Lubricate new O-ring with coolant and slide onto coolant pipe.

– Install poly V-belt ⇒ page 60 .

Protected by copyright. Copying for private or commercial purposes, in part or in whole, is not permitted unless authorised by AUDI AG. AUDI AG does not guarantee or accept any liability with respect to the correctness of information in this document. Copyright by AUDI AG.

– Install radiator cowl ⇒ page 246 .

– Install radiator ⇒ page 242 .

Note

Do not reuse coolant.

– Fill cooling system ⇒ page 216 .

Tightening torques

Component		Nm
Coolant pipes to engine		9
Idler roller to cylinder block	M8	22
	M10	42
Retaining clip for hydraulic line to sump		9
Oil supply line to:	Sealing flange (front)	25
	Cylinder block	9
Guide tube for dipstick to cylinder block		9
Crankcase breather pipe to engine		25
Air pipe to engine		9
Hose clips (9 mm wide)		3
Hose clips (13 mm wide)		5.5

1.8 Removing and installing coolant pipe (left-side)

Special tools and workshop equipment required

♦ Hose clip pliers - VAS 6362-

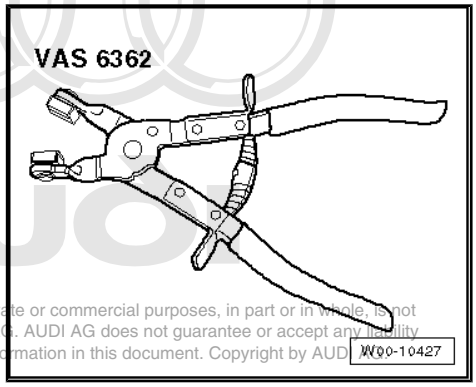

Protected by copyright. Copying for private or commercial purposes, in part or in whole, is not permitted unless authorised by AUDI AG. AUDI AG does not guarantee or accept any liability with respect to the correctness of information in this document. Copyright by AUDI AG.

Removing

Note

All cable ties which are released or cut open when removing must be fitted in the same position when installing.

– Remove radiator ⇒ page 242 .

– Remove radiator cowl ⇒ page 246 .

– Unplug electrical connector -2- going to charge pressure sender - G31- .

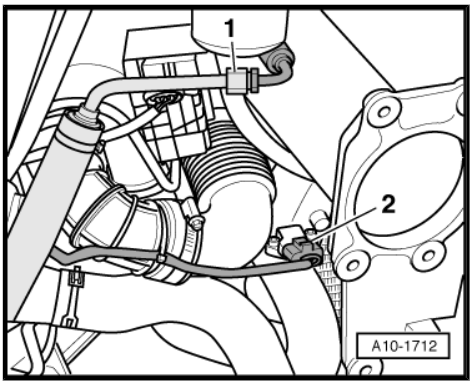

Note

Disregard -item 1-.

– Remove bolts -arrows- and detach bracket for charge air cooler.

– Take off charge air cooler -1- (left-side).

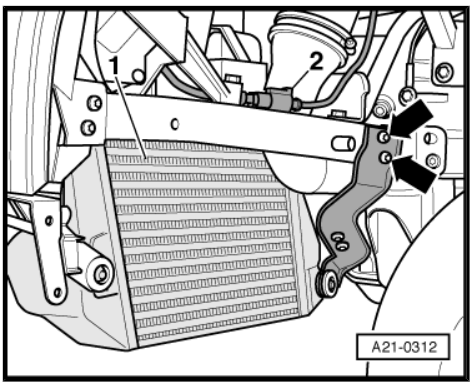

Note

Disregard -item 2-.

– Unscrew securing bolt -2- and securing bolt -4-.
– Loosen hose clips -1- and -3- and remove air intake hose between air cleaner housing and turbocharger (left-side).

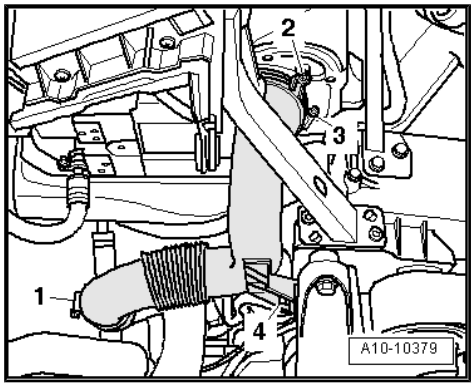

Protected by copyright. Copying for private or commercial purposes, in part or in whole, is not permitted unless authorised by AUDI AG. AUDI AG does not guarantee or accept any liability with respect to the correctness of information in this document. Copyright by AUDI AG.

– Unplug electrical connectors -1- and -4-.
– Remove crankcase breather hose -2-.
– Detach air hoses -3- and -5- from turbocharger.
– Lower subframe for repair and assembly work ⇒ page 52 .
– Remove starter catalytic converter (left-side) ⇒ page 295 .

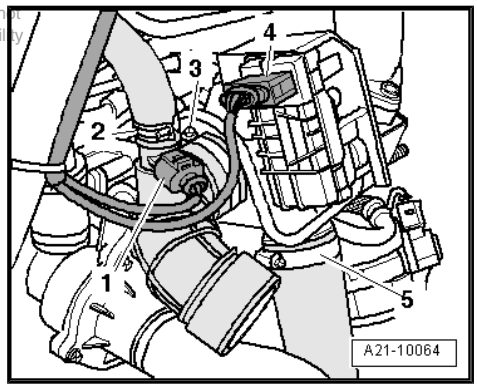

– Unplug electrical connector -2- at engine mounting (left-side).
– Unscrew bolt -1- and remove engine mounting left-side).

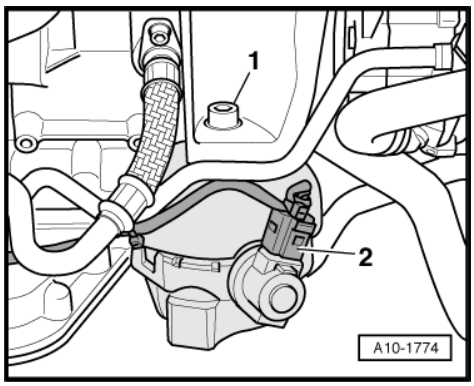

– Remove bolts -arrows- and detach engine support (left-side).

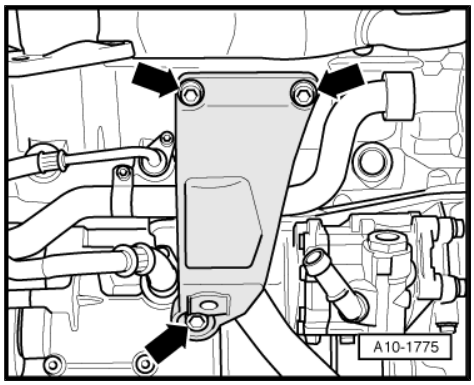

– Remove bolts -1- and -2-.
– Detach coolant pipe (rear) from coolant pipe (left-side).

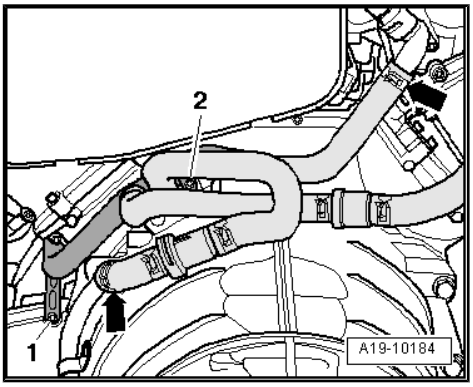

Note

The coolant hoses remain connected -arrows-.

Protected by copyright. Copying for private or commercial purposes, in part or in whole, is not permitted unless authorised by AUDI AG. AUDI AG does not guarantee or accept any liability with respect to the correctness of information in this document. Copyright by AUDI AG.

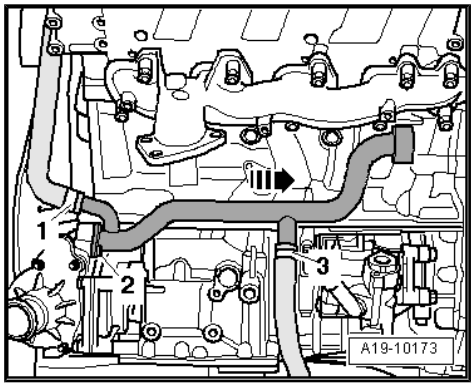

– Detach coolant hoses -1- and -3-.
– Remove bolt -2-.
– Detach coolant pipe (left-side) from coolant pump.

Note

Shown in illustration with turbocharger (left-side) removed.

Installing

Installation is carried out in the reverse order; note the following:

Note

- *Renew O-rings.*
- *Secure all hose connections with the correct type of hose clips (same as original equipment) ⇒ Electronic parts catalogue .*
- *Fit all cable ties in the original positions when installing.*

– Clean and smoothen sealing surface for O-ring as required before installing.
– Lubricate new O-ring with coolant and slide onto coolant pipe.
– Install engine support and engine mounting ⇒ page 46 .
– Install coolant pipe (rear) ⇒ page 237 .
– Install starter catalytic converter (left-side) ⇒ page 295 .
– Install radiator cowl ⇒ page 246 .
– Install radiator ⇒ page 242 .
– Install subframe ⇒ Rep. gr. 40 .
– Tighten subframe bolts only to specified torque (do not turn further). Do not tighten bolts to final setting until after wheel alignment check has been performed ⇒ Rep. gr. 40 .

WARNING

The vehicle must not be driven at this stage.

– Install anti-roll bar ⇒ Rep. gr. 40 .

Note

Do not reuse coolant.

– Fill cooling system ⇒ page 216 .
– Perform wheel alignment check ⇒ Rep. gr. 44 .

WARNING

Tighten bolts for subframe to final setting after performing wheel alignment check.

Protected by copyright. Copying for private or commercial purposes, in part or in whole, is not permitted unless authorised by AUDI AG. AUDI AG does not guarantee or accept any liability with respect to the correctness of information in this document. Copyright by AUDI AG.

Tightening torques

Component	Nm
Coolant pipe to engine	9
Bracket for charge air cooler to body	9
Air pipe to engine cross member	9
Hose clips (9 mm wide)	3
Hose clips (13 mm wide)	5.5

1.9 Removing and installing coolant pipe (right-side)

Removing

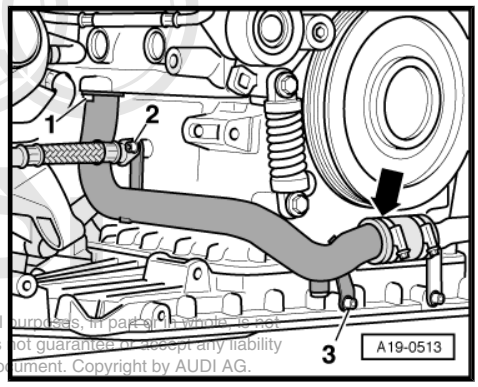

– Remove alternator ⇒ Electrical system; Rep. gr. 27

– Remove bolts -1-, -2- and -3-.

– Loosen hose clip -arrow- and pull coolant pipe (right-side) out of cylinder block.

Installing

Installation is carried out in the reverse order; note the following:

Protected by copyright. Copying for private or commercial purposes, in part or in whole, is not permitted unless authorised by AUDI AG. AUDI AG does not guarantee or accept any liability with respect to the correctness of information in this document. Copyright by AUDI AG.

Note

- *Renew O-rings.*
- *Secure all hose connections with the correct type of hose clips (same as original equipment) ⇒ Electronic parts catalogue .*

– Clean and smoothen sealing surface for O-ring as required before installing.

– Lubricate new O-ring with coolant and slide onto coolant pipe.

– Install alternator ⇒ Electrical system; Rep. gr. 27

Tightening torques

Component	Nm
Coolant pipe to engine	9
Hose clips (9 mm wide)	3
Hose clips (13 mm wide)	5.5

1.10 Removing and installing coolant pipe (rear)

Removing

– Drain off coolant ⇒ page 215 .

– Lower subframe for repair and assembly work ⇒ page 52 .

– Remove starter catalytic converter (left-side) ⇒ page 295 .

– Unplug electrical connector -arrow- at fuel temperature sender - G81- .
– Move fuel lines clear.

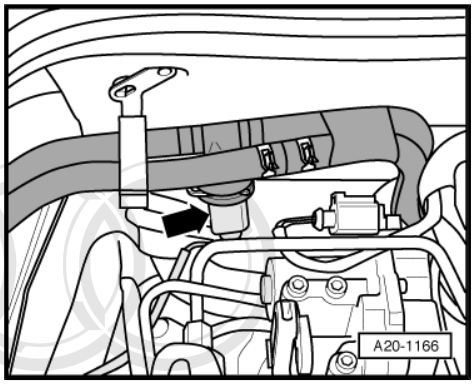

– Disconnect coolant hose at bulkhead -arrow-.

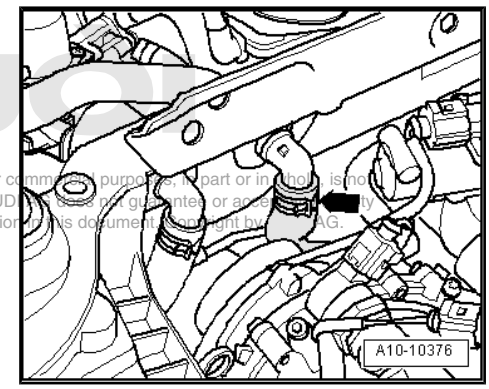

Protected by copyright. Copying for private or commercial purposes, in part or in whole, is not permitted unless authorised by AUDI AG. AUDI AG does not guarantee or accept any liability with respect to the correctness of information in this document copyright by AUDI AG.

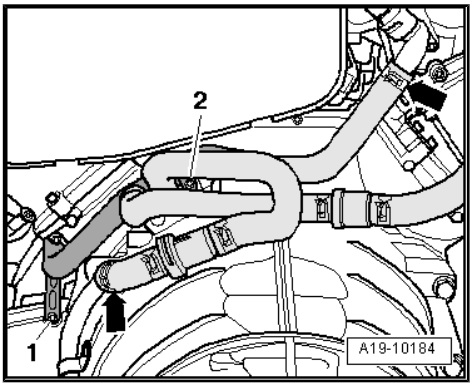

– Detach coolant hoses at the connections indicated -arrows-.
– Remove bolts -1- and -2-.
– Detach coolant pipe (rear) from coolant pipe (left-side).

Installing

Installation is carried out in the reverse order; note the following:

Note

- *Renew O-rings.*
- *Secure all hose connections with the correct type of hose clips (same as original equipment) ⇒ Electronic parts catalogue .*

– Clean and smoothen sealing surface for O-ring as required before installing.
– Lubricate new O-ring with coolant and slide onto coolant pipe.
– Install starter catalytic converter (left-side) ⇒ page 295 .
– Install subframe ⇒ Rep. gr. 40 .
– Tighten subframe bolts only to specified torque (do not turn further). Do not tighten bolts to final setting until after wheel alignment check has been performed ⇒ Rep. gr. 40 .

WARNING

The vehicle must not be driven at this stage.

– Install anti-roll bar ⇒ Rep. gr. 40 .

Note

Do not reuse coolant.

– Fill cooling system ⇒ page 216 .
– Perform wheel alignment check ⇒ Rep. gr. 44 .

WARNING

Tighten bolts for subframe to final setting after performing wheel alignment check.

Tightening torque

Component	Nm
Coolant pipe to engine	9

Protected by copyright. Copying for private or commercial purposes, in part or in whole, is not permitted unless authorised by AUDI AG. AUDI AG does not guarantee or accept any liability with respect to the correctness of information in this document. Copyright by AUDI AG.

1.11 Removing and installing coolant temperature sender - G62-

Removing

– Remove cover above coolant expansion tank -arrows-.

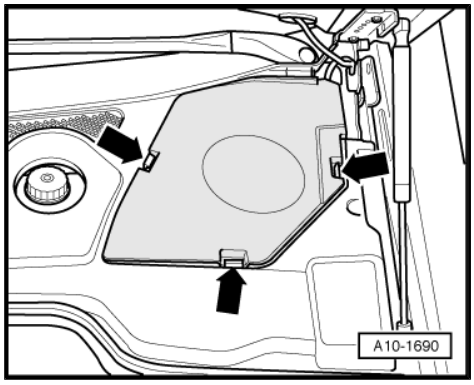

> **WARNING**
>
> *Hot steam or hot coolant can escape when expansion tank is opened; cover filler cap with cloth and open carefully.*

– Open filler cap on coolant expansion tank.

– Carefully pull engine cover panel off four retaining pins one after the other -arrows-.

Reproduction of this publication for private or commercial purposes, in part or in whole, is not permitted unless authorised by AUDI AG. AUDI AG does not guarantee or accept any liability with respect to the correctness of information in this document. Copyright by AUDI AG.

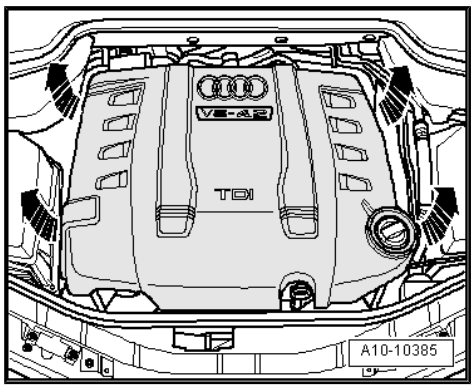

– Unplug electrical connector -2- at coolant temperature sender - G62- .

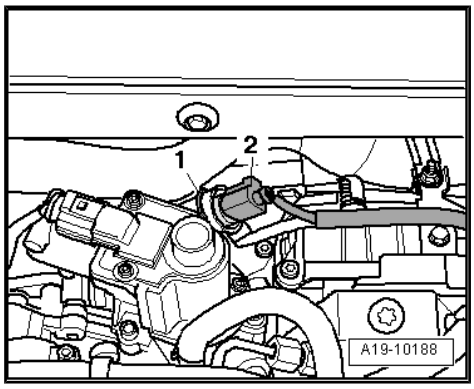

Note

Lay a cloth under the coolant temperature sender - G62- to catch escaping coolant.

– Pull out retaining clip -1- and remove coolant temperature sender - G62- .

Installing

Installation is carried out in the reverse order; note the following:

Note

- *Renew O-ring.*
- *Do not reuse coolant.*

– Fill cooling system ⇒ page 216 .

1.12 Radiator and radiator fans - exploded view

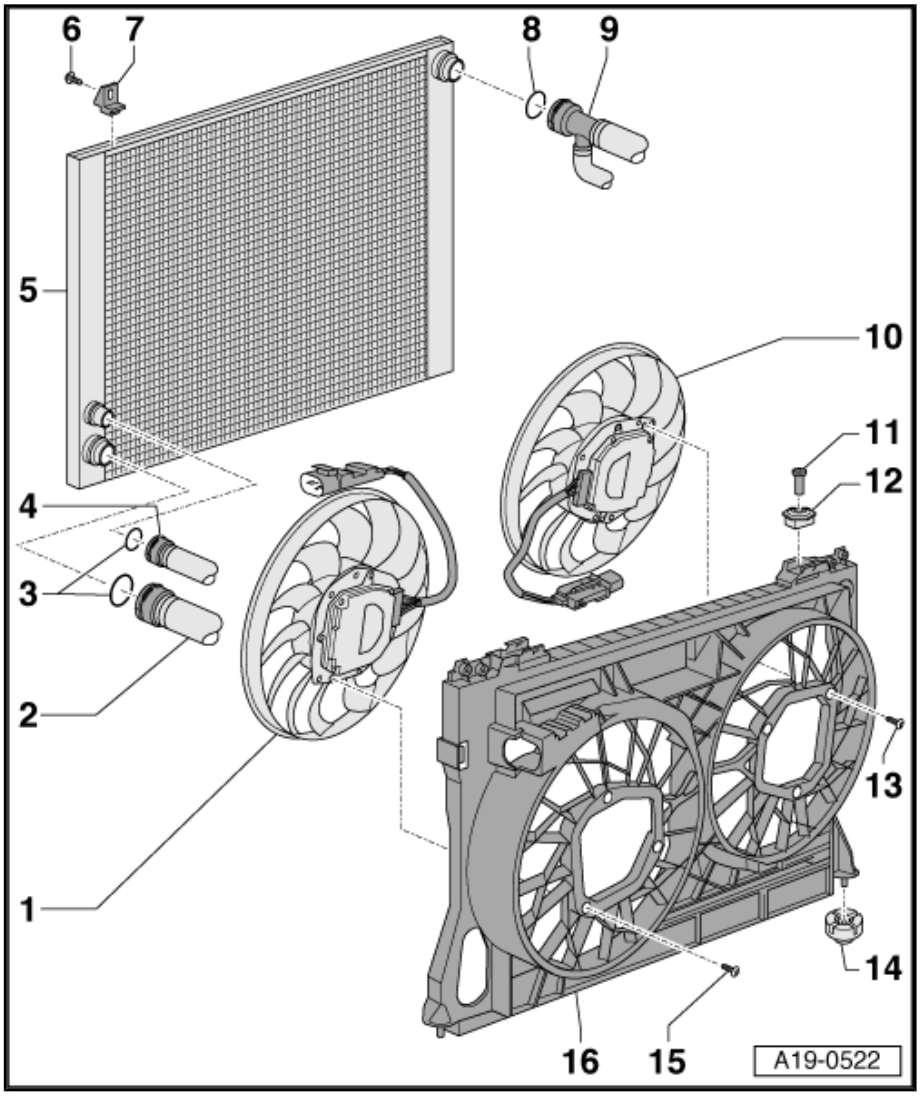

1 - Radiator fan - V7-

- ❑ Removing and installing ⇒ page 247
- ❑ With radiator fan control unit - J293-

2 - Coolant hose

- ❑ To detach, release retaining clip
- ❑ Connecting to radiator ⇒ page 242

3 - O-ring

- ❑ Renew

4 - Coolant hose

- ❑ To detach, release retaining clip
- ❑ Connecting to radiator ⇒ page 242

5 - Radiator

- ❑ Removing and installing ⇒ page 242
- ❑ If renewed, change coolant in entire system

6 - 6 Nm

7 - Bracket

- ❑ For radiator

8 - O-ring

- ❑ Renew

9 - Coolant hose

- ❑ To detach, release retaining clip
- ❑ Connecting to radiator ⇒ page 242

10 - Radiator fan 2 - V177-

- ❑ Removing and installing ⇒ page 247
- ❑ With radiator fan control unit 2 - J671-

11 - Retaining pin

- ❑ Use screwdriver to release and pull off

12 - Rubber buffer

13 - 10 Nm

14 - Rubber mounting

15 - 10 Nm

16 - Radiator cowl

Protected by copyright. Copying for private or commercial purposes, in part or in whole, is not permitted unless authorised by AUDI AG. AUDI AG does not guarantee or accept any liability with respect to the correctness of information in this document. Copyright by AUDI AG.

Connecting coolant hose with plug-in connector

– Remove old O-ring -2- from coolant hose -3-.
– Lubricate new O-ring with coolant additive and fit O-ring in coolant hose.
– Press coolant hose onto connection -1- until it engages audibly.
– Press coolant hose in again and then pull to check that plug-in connector is correctly engaged.

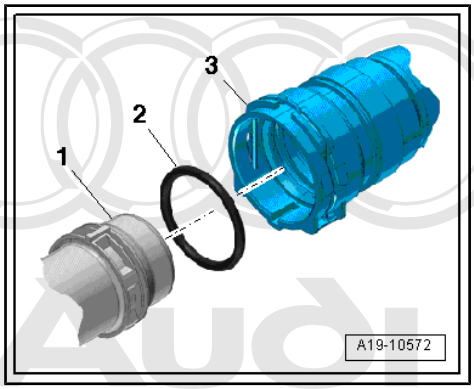

1.13 Removing and installing radiator

Protected by copyright. Copying for private or commercial purposes, in part or in whole, is not permitted unless authorised by AUDI AG. AUDI AG does not guarantee or accept any liability with respect to the correctness of information in this document. Copyright by AUDI AG.

Special tools and workshop equipment required

♦ Drip tray for workshop hoist - VAS 6208-

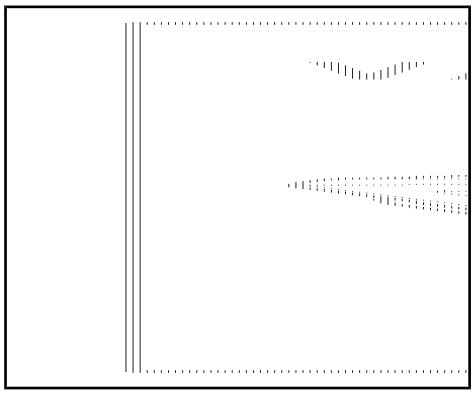

♦ Hose clip pliers - VAS 6362-

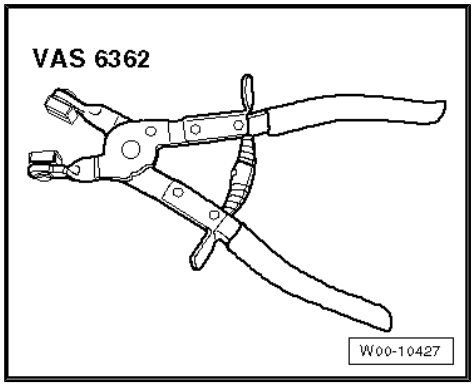

Removing

– Carefully pull engine cover panel off four retaining pins one after the other -arrows-.

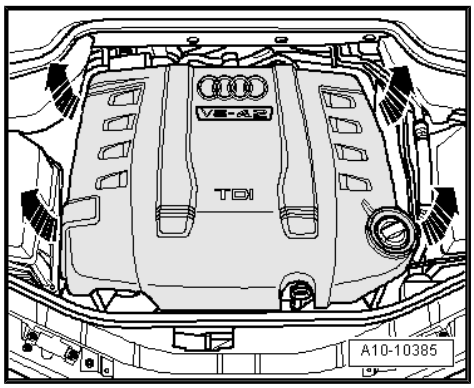

– Remove cover above coolant expansion tank -arrows-.

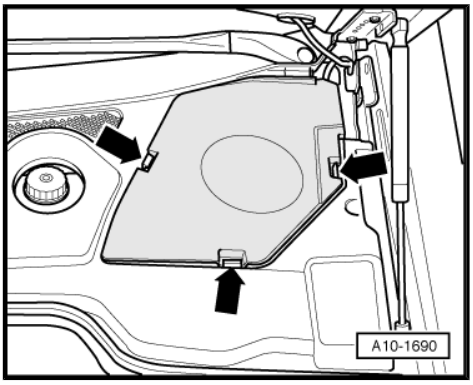

> **WARNING**
>
> *Hot steam or hot coolant can escape when expansion tank is opened; cover filler cap with cloth and open carefully.*

– Open filler cap on coolant expansion tank.

– Open quick-release fasteners -1- and remove noise insulation (front).

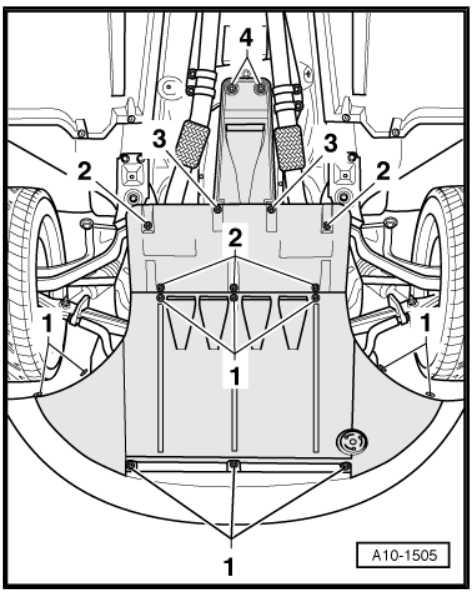

– Place drip tray for workshop hoist - VAS 6208- under engine.

– Remove drain plug -arrow- and let coolant drain.

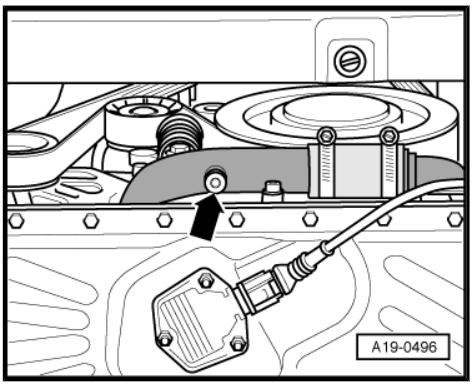

– Disconnect coolant hose -arrow- from coolant pipe and drain off remaining coolant.

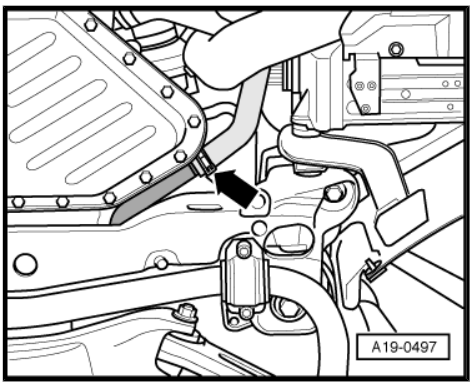

Protected by copyright. Copying for private or commercial purposes, in part or in whole, is not permitted unless authorised by AUDI AG. AUDI AG does not guarantee or accept any liability with respect to the correctness of information in this document. Copyright by AUDI AG.

– Remove air hose (front left) -arrows-.

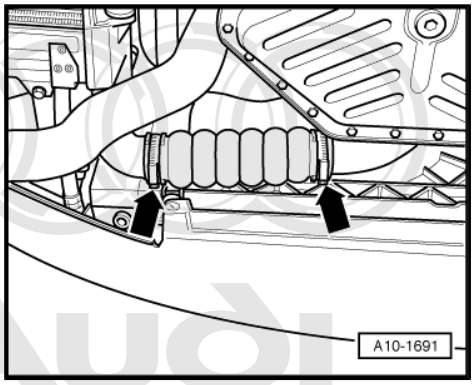

– Release retaining clips and disconnect coolant hoses -1- and -2- at radiator.
– Remove front sections of front wheel housing liners (left and right) ⇒ Rep. gr. 66 .
– Remove bumper cover (front) ⇒ Rep. gr. 63 .

Protected by copyright. Copying for private or commercial purposes, in part or in whole, is not permitted unless authorised by AUDI AG. AUDI AG does not guarantee or accept any liability with respect to the correctness of information in this document. Copyright by AUDI AG.

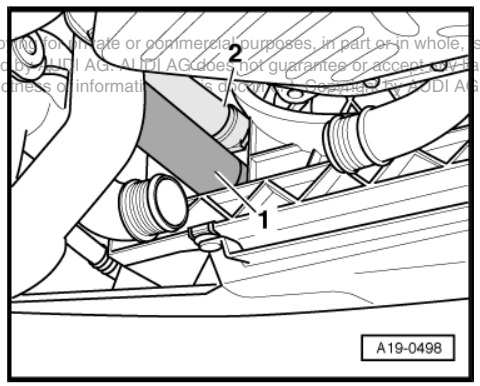

– Pull off retaining clip and disconnect top coolant hose -arrow- from radiator.

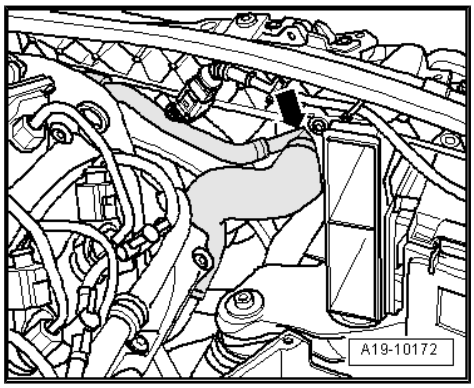

– Remove bolts -1-, -3- and -5-.
– Remove bolt -4- and nut -6-.
– Slacken hose clip -2- and detach air pipe.
– Detach air duct from charge air cooler (left-side).

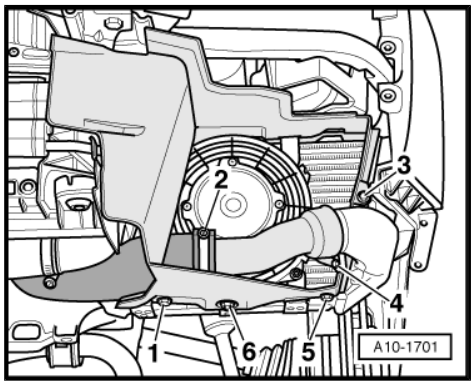

– Detach ambient temperature sensor - G17- -item 4- from bracket.
– Unplug electrical connectors -1 ... 3-.
– Move wiring harness clear.

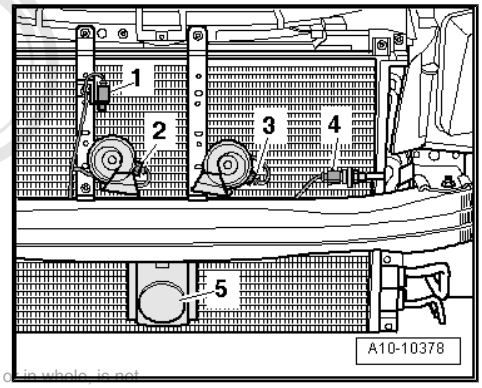

Note

Disregard -item 5-.

Protected by copyright. Copying for private or commercial purposes, in part or in whole, is not permitted unless authorised by AUDI AG. AUDI AG does not guarantee or accept any liability with respect to the correctness of information in this document. Copyright by AUDI AG.

– Remove bolts -arrows-.
– Remove bumper together with struts.
– Detach electrical connector from adaptive cruise control unit - J428- (if fitted).

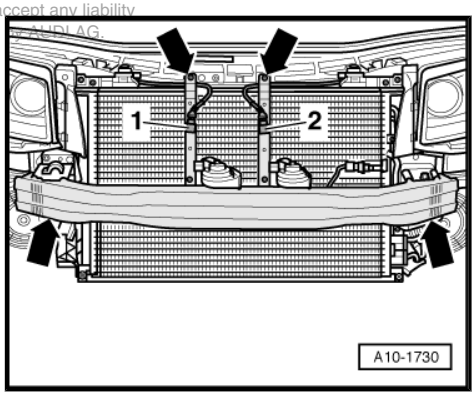

Note

Disregard items -1- and -2-.

WARNING

The air conditioner refrigerant circuit must not be opened.

Note

To prevent damage to the refrigerant lines, ensure that the pipes and hoses are not stretched, kinked or bent.

– Remove bolts -arrows-.
– Pivot condenser downwards together with cooler for power steering.
– Tie up condenser on engine.

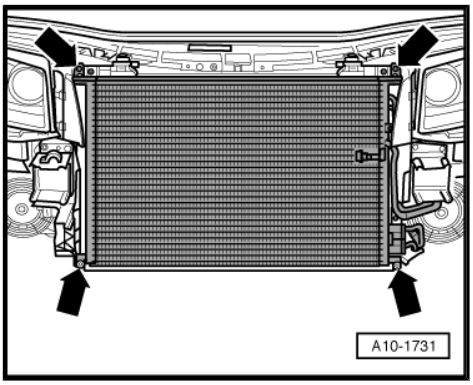

– Remove the two brackets for radiator -arrows-.

– Tilt top of radiator forwards slightly and lift out of lock carrier.

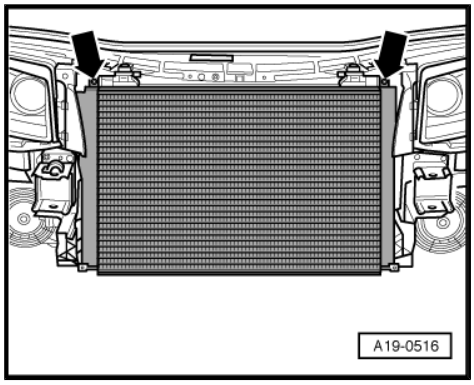

Installing

Installation is carried out in the reverse order; note the following:

Note

- *Hose connections and hoses for charge air system must be free of oil and grease before assembly.*
- *Secure all hose connections with the correct type of hose clips (same as original equipment) ⇒ Electronic parts catalogue .*

– Connect coolant hose with plug-in connector to radiator ⇒ page 242 .

– Install front bumper ⇒ Rep. gr. 63 .

Note

Do not reuse coolant.

– Fill cooling system ⇒ page 216 .

Tightening torques

Component	Nm
Bracket for radiator to lock carrier	6
Condenser to lock carrier	6
Struts to lock carrier	9
Bumper to impact damper	23
Air pipe to charge air cooler	9
Air duct to charge air cooler	9
Hose clips (9 mm wide)	3
Hose clips (13 mm wide)	5.5

Protected by copyright. Copying for private or commercial purposes, in part or in whole, is not permitted unless authorised by AUDI AG. AUDI AG does not guarantee or accept any liability with respect to the correctness of information in this document. Copyright by AUDI AG.

1.14 Removing and installing radiator cowl

Removing

– Remove radiator ⇒ page 242 .

– Unplug electrical connector -arrow- going to radiator fans.

– Move wires clear at rear of lock carrier.

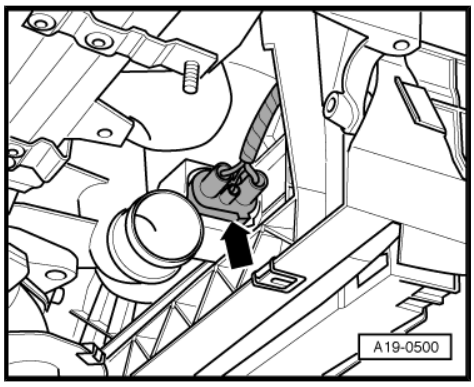

– Remove air duct (left-side) -arrows-.

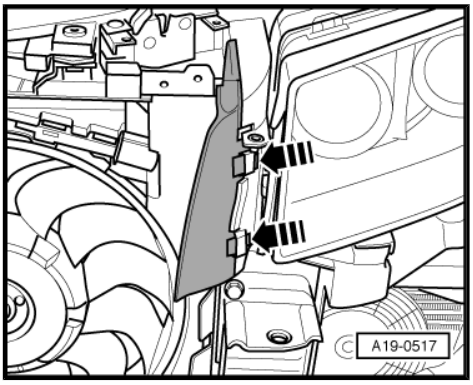

– Release both retaining pins for radiator cowl and pull out upwards -arrows-.
– Tilt top edge of radiator cowl forwards.

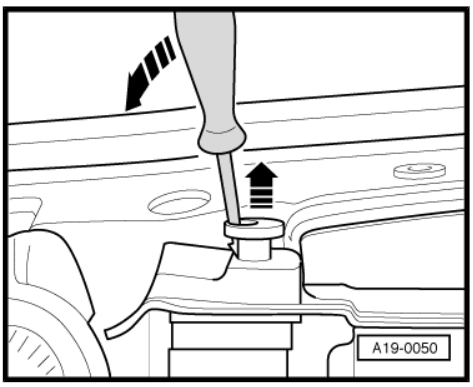

– Reach behind radiator cowl and unplug electrical connector -arrow- for radiator fans.
– Remove radiator cowl.

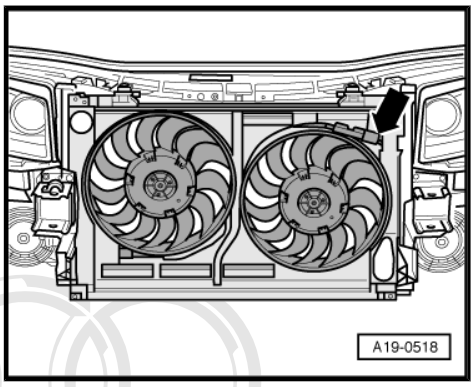

Installing

Installation is carried out in the reverse order; note the following:

– Install radiator ⇒ page 242 .

Note

Do not reuse coolant.

– Fill cooling system ⇒ page 216 .

1.15 Removing and installing radiator fans

Removing

– Remove radiator ⇒ page 242 .
– Remove radiator cowl ⇒ page 246 .

Protected by copyright. Copying for private or commercial purposes, in part or in whole, is not permitted unless authorised by AUDI AG. AUDI AG does not guarantee or accept any liability with respect to the correctness of information in this document. Copyright by AUDI AG.

– Remove bolts -arrows-.
– Unclip electrical connectors and lay wiring aside.
– Remove radiator fans.

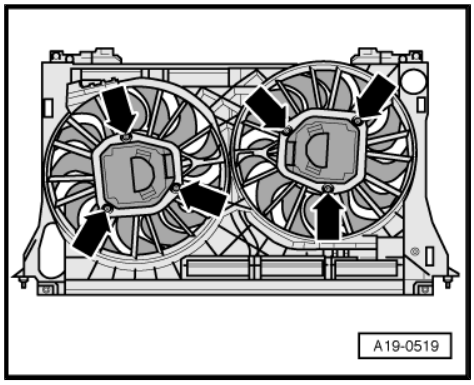

Installing

Installation is carried out in the reverse order; note the following:

– Install radiator cowl ⇒ page 246 .
– Install radiator ⇒ page 242 .

Note

Do not reuse coolant.

– Fill cooling system ⇒ page 216 .

Tightening torque

Component	Nm
Radiator fan to radiator cowl	10 [1]
• [1] Renew bolts.	

1.16 Checking cooling system for leaks

Special tools and workshop equipment required

♦ Cooling system tester - V.A.G 1274 B-

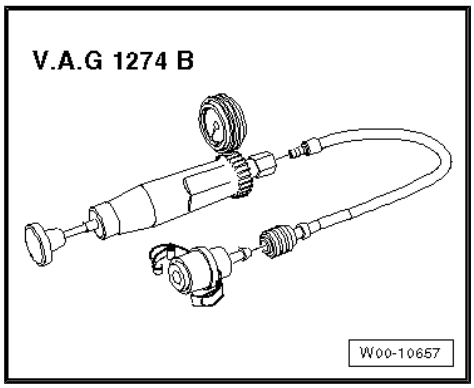

♦ Adapter for cooling system tester - V.A.G 1274/8-

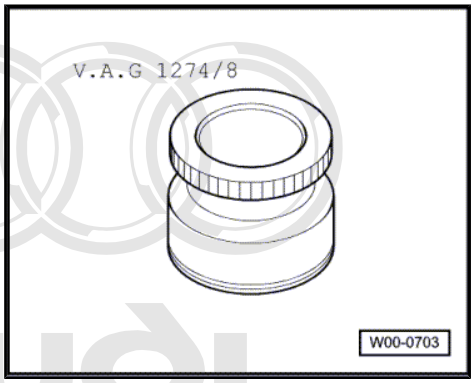

Protected by copyright. Copying for private or commercial purposes, in part or in whole, is not permitted unless authorised by AUDI AG. AUDI AG does not guarantee or accept any liability with respect to the correctness of information in this document. Copyright by AUDI AG.

♦ Adapter for cooling system tester - V.A.G 1274/9-

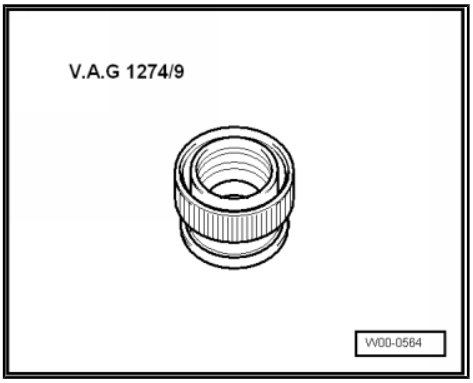

Test condition

- Engine must be warm.

Procedure

– Remove cover above coolant expansion tank -arrows-.

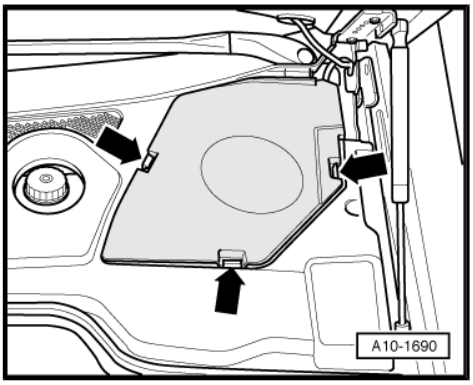

> ⚠ WARNING
>
> *Hot steam or hot coolant can escape when expansion tank is opened; cover filler cap with cloth and open carefully.*

– Open filler cap on coolant expansion tank.

– Attach cooling system tester - V.A.G 1274 B- with adapter - V.A.G 1274/8- to coolant expansion tank.

– Use hand pump on cooling system tester to create a pressure of approx. 1.0 bar.

If the pressure drops:

– Trace leak and repair.

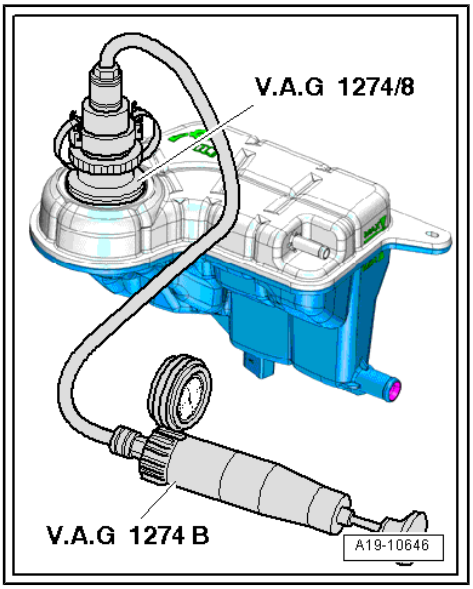

Checking pressure relief valve in filler cap

– Attach cooling system tester - V.A.G 1274 B- with adapter - V.A.G 1274/9- to filler cap.

– Use hand pump on cooling system tester to create pressure.

Protected by copyright. Copying for private or commercial purposes, in part or in whole, is not permitted unless authorised by AUDI AG. AUDI AG does not guarantee or accept any liability with respect to the correctness of information in this document. Copyright by AUDI AG.

- The pressure relief valve should open at a pressure of 1.4 ... 1.6 bar.

If the pressure relief valve does not open as described:

– Renew filler cap.

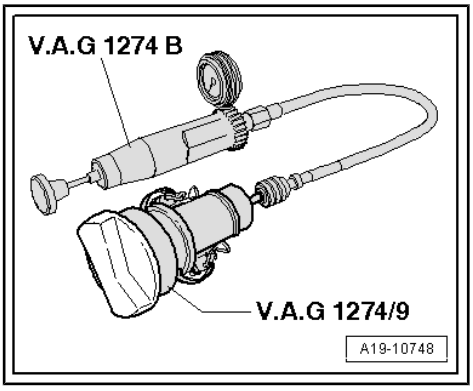

21 – Turbocharging/supercharging

1 Servicing charge air system with turbocharger

⇒ “1.1 Turbocharger - exploded view”, page 250

⇒ “1.2 Removing and installing turbocharger (left-side)”, page 252

⇒ “1.3 Removing and installing turbocharger (right-side)”, page 258

⇒ “1.4 Charge air cooling - exploded view”, page 266

⇒ “1.5 Removing and installing charge air cooler (left-side)”, page 268

⇒ “1.6 Removing and installing charge pressure sender G31 ”, page 270

⇒ “1.7 Removing and installing charge air cooler (right-side)”, page 271

Protected by copyright. Copying for private or commercial purposes, in part or in whole, is not permitted unless authorised by AUDI AG. AUDI AG does not guarantee or accept any liability with respect to the correctness of information in this document. Copyright by AUDI AG.

1.1 Turbocharger - exploded view

Note

Illustration shows turbocharger of cylinder bank 2 (left-side).

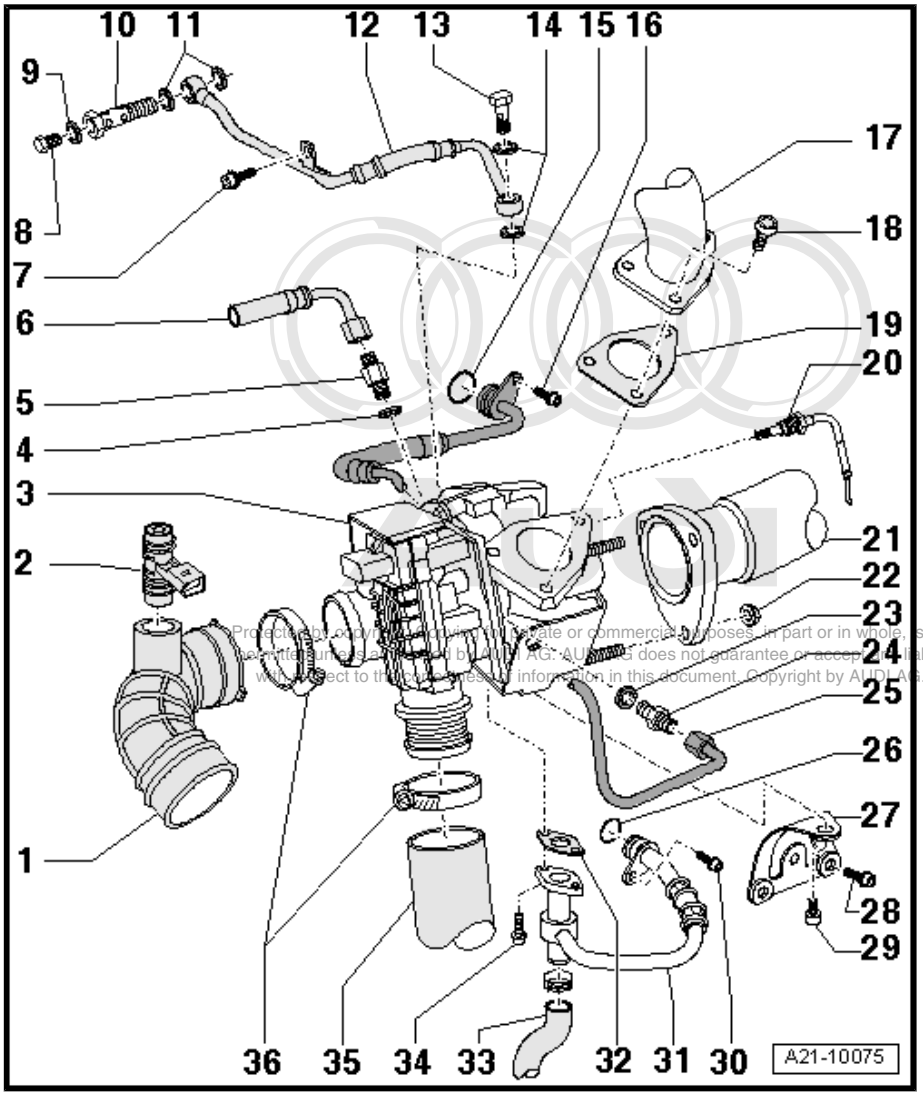

Protected copyright. Reproduction for private or commercial purposes, in part or in whole, is not permitted unless authorized by AUDI AG. AUDI AG does not guarantee or accept any liability with respect to the correctness of information in this document. Copyright by AUDI AG.

1 - Air hose

- ❑ From air cleaner
- ❑ Must be free of oil and grease when installing

2 - Heating element for crankcase breather - N79-

- ❑ Installation position: arrow on housing points to air intake hose

3 - Turbocharger

- ❑ Removing and installing: left-side ⇒ page 252 ; right-side ⇒ page 258

4 - Seal

- ❑ Renew

5 - Threaded connection, 28 Nm

6 - Coolant pipe

- ❑ Tighten union nut to 25 Nm

7 - 9 Nm

8 - Screw plug, 15 Nm

9 - Seal

- ❑ Renew

10 - Banjo bolt, 25 Nm

11 - Seals

- ❑ Renew

12 - Oil supply line

- ❑ From cylinder block

13 - Banjo bolt, 15 Nm

14 - Seals

- ❑ Renew

15 - O-ring

- ❑ Renew

16 - 9 Nm

17 - Exhaust manifold

- ❑ Removing and installing: left-side ⇒ page 312 ; right-side ⇒ page 312

18 - 20 Nm + 1/4 turn (90°) further

- ❑ Renew
- ❑ Coat with high-temperature paste; for high-temperature paste refer to ⇒ Electronic parts catalogue

19 - Gasket

- ❑ Renew

20 - Exhaust gas temperature sender

- ❑ Exhaust gas temperature sender 1 for bank 2 - G236- (left-side), exhaust gas temperature sender 1 - G235- (right-side)
- ❑ Removing and installing: left-side ⇒ page 281 , right-side ⇒ page 280

21 - Front exhaust pipe

- ❑ Removing and installing: left-side ⇒ page 295 ; right-side ⇒ page 301

22 - 25 Nm

- ❑ Renew

23 - Seal

- ❑ Renew

24 - Threaded connection, 28 Nm

25 - Coolant pipe

- ❑ Tighten union nut to 25 Nm

Copyright. Copying for private or commercial purposes, in part or in whole, is not permitted unless authorised by AUDI AG. AUDI AG does not guarantee or accept any liability with respect to the correctness of information in this document. Copyright by AUDI AG.

26 - O-ring

- ❑ Renew

27 - Support

- ❑ For turbocharger
- ❑ Installing free of stress ⇒ page 257

28 - 22 Nm

- ❑ Tightening sequence ⇒ page 257

29 - 40 Nm

- ❑ Property class 10.9
- ❑ Coat with high-temperature paste; for high-temperature paste refer to ⇒ Electronic parts catalogue
- ❑ Tightening sequence ⇒ page 257

30 - 10 Nm

31 - Oil return line

32 - Gasket

- ❑ Renew

33 - Oil return hose

34 - 10 Nm

35 - Air hose

- ❑ To charge air cooler
- ❑ Must be free of oil and grease when installing

36 - Retaining clip, 5.5 Nm

- ❑ Reinforced

1.2 Removing and installing turbocharger (left-side)

Special tools and workshop equipment required

- Used oil collection and extraction unit - V.A.G 1782- or -VAS 6622A-

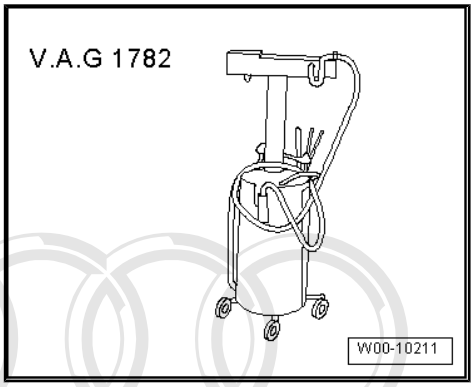

- Hose clip pliers - VAS 6362-

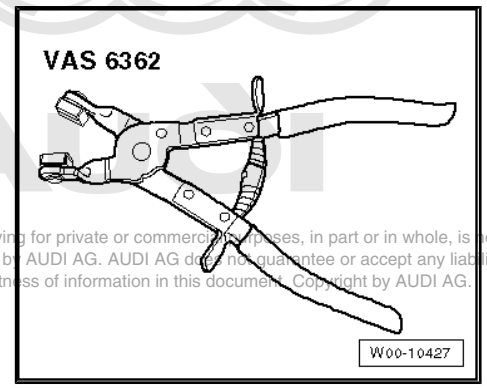

Protected by copyright. Copying for private or commercial purposes, in part or in whole, is not permitted unless authorised by AUDI AG. AUDI AG does not guarantee or accept any liability with respect to the correctness of information in this document. Copyright by AUDI AG.

Removing

Caution

If the turbocharger has suffered mechanical damage (e.g. damaged compressor wheel), it is not sufficient merely to fit a new turbocharger. The following work must be performed in order to avoid further damage:

- *Check air cleaner housing, air filter element and air hoses for dirt and foreign particles.*
- *Check the entire charge air system (including the charge air cooler) for foreign matter.*
- *If foreign matter is found in the charge air system, clean all relevant ducts and hoses and renew charge air cooler if necessary.*

Note

- *Rules for cleanliness* ⇒ page 5 .
- *All cable ties which are released or cut open when removing must be fitted in the same position when installing.*

– Remove radiator ⇒ page 242 .
– Remove radiator cowl ⇒ page 246 .
– Position used oil collection and extraction unit below engine.
– Drain off engine oil.

– Unplug electrical connector -2- going to charge pressure sender - G31- .

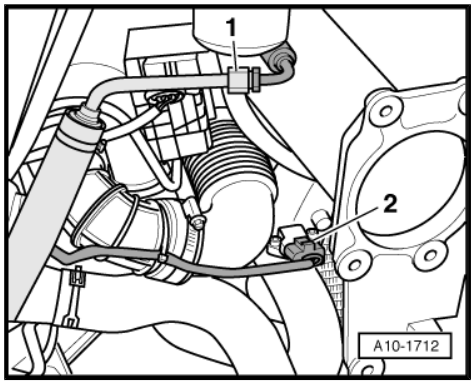

Note

Disregard -item 1-.

– Remove bolts -arrows- and detach bracket for charge air cooler.

– Take off charge air cooler -1- (left-side).

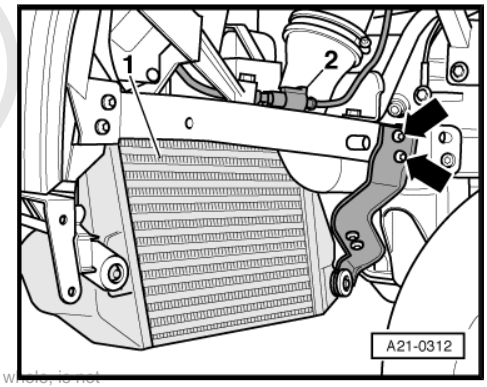

Note

Disregard -item 2-.

Protected by copyright. Copying for private or commercial purposes, in part or in whole, is not permitted unless authorised by AUDI AG. AUDI AG does not guarantee or accept any liability with respect to the accuracy of the information in this document. Copyright by AUDI AG.

– Unscrew securing bolt -2- and securing bolt -4-.

– Loosen hose clips -1- and -3- and remove air intake hose between air cleaner housing and turbocharger (left-side).

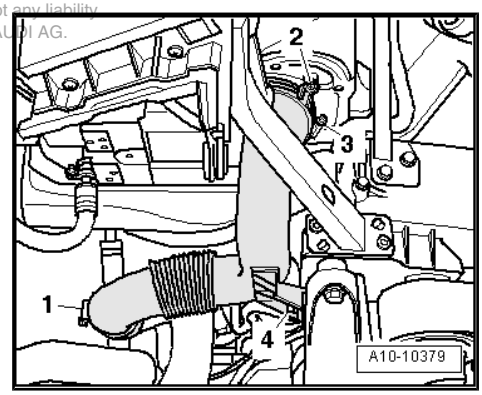

– Unscrew bolts -arrows- and detach top section of air cleaner housing (left-side).

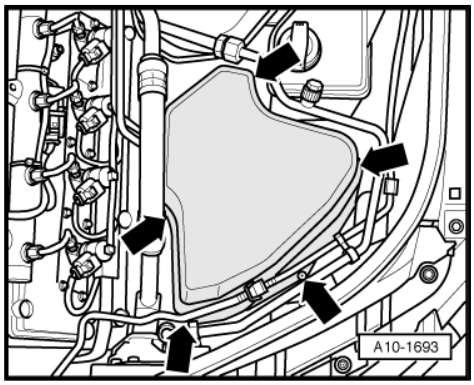

– Unplug electrical connector -1- at air mass meter and move wiring clear.
– Remove bolts -arrows- and detach bottom section of air cleaner housing (left-side).
– Remove starter catalytic converter (left-side) ⇒ page 295 .

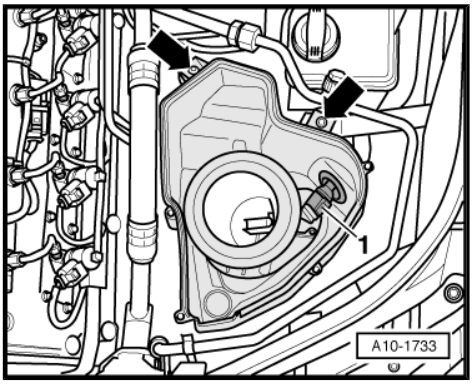

– Move electrical wiring clear of air pipe (front left).
– Remove air pipe (front left) -arrows-.

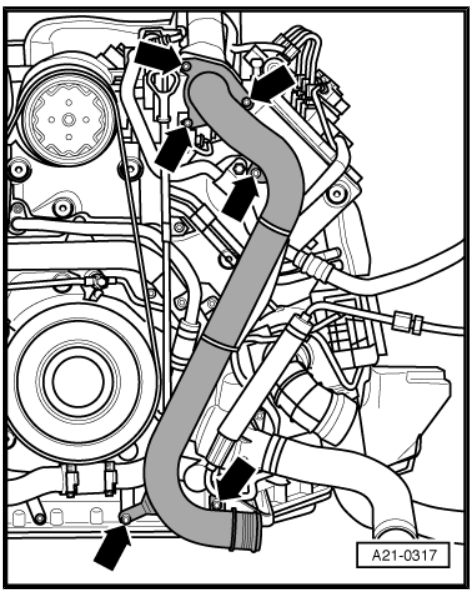

– Unplug electrical connectors -1- and -4-.
– Remove crankcase breather hose -2-.
– Detach air hoses -3- and -5- from turbocharger.

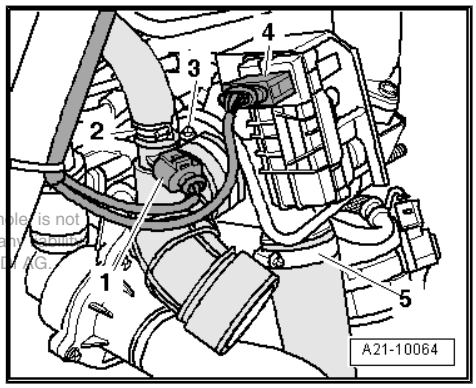

Protected by copyright. Copying for private or commercial purposes, in part or in whole, is not permitted unless authorised by AUDI AG. AUDI AG does not guarantee or accept any liability with respect to the correctness of information in this document. Copyright by AUDI AG.

– Unbolt coolant line -1- and oil supply line -2- at turbocharger.

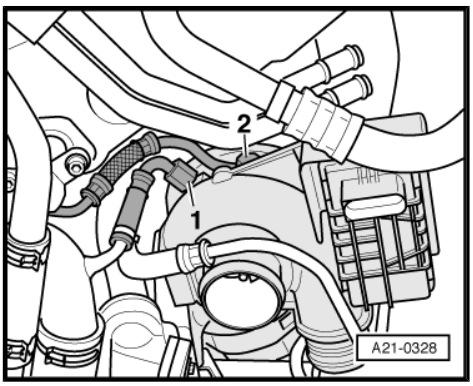

– Remove coolant pipe -arrows-.

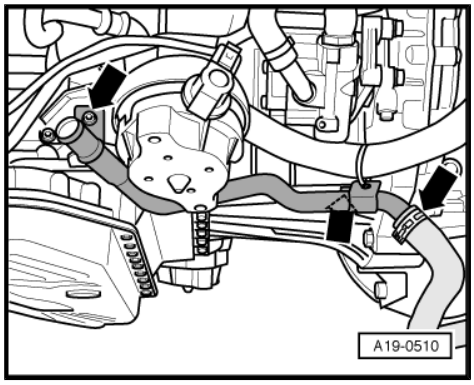

Protected by copyright. Copying for private or commercial purposes, in part or in whole, is not permitted unless authorised by AUDI AG. AUDI AG does not guarantee or accept any liability with respect to the correctness of information in this document. Copyright by AUDI AG.

– Remove bolts -4- and -6-.
– Detach support for turbocharger.
– Detach coolant line -3- at side of turbocharger.
– Remove bolts -2- and -5-.
– Remove oil return hose -1- from sump (centre section).
– Remove oil return line.

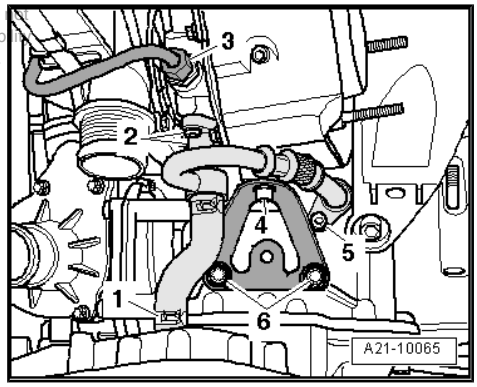

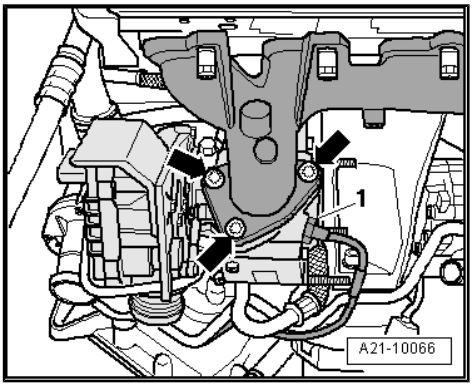

– Unscrew exhaust gas temperature sender 1 for bank 2 - G236- -item 1- from turbocharger.

– Unscrew bolts -arrows- at top of turbocharger.

– Take out turbocharger downwards.

Installing

Installation is carried out in the reverse order; note the following:

Note

- *Renew gaskets, seals, O-rings and self-locking nuts.*
- *Hose connections and hoses for charge air system must be free of oil and grease before assembly.*
- *Secure all hose connections with the correct type of hose clips (same as original equipment) ⇒ Electronic parts catalogue .*
- *Charge air system must be free of leaks.*
- *Fit all cable ties in the original positions when installing.*
- *Fill turbocharger with engine oil at connection for oil supply line.*
- *After installing turbocharger, allow engine to idle for approx. 1 minute and do not rev up immediately to ensure turbocharger is supplied with oil.*

Protected by copyright. Copying or distribution of this document or any extracts, in part or in whole, is not permitted unless authorised by AUDI AG. AUDI AG does not guarantee or accept any liability with respect to the correctness and completeness of the contents of this document.

– Bolt turbocharger to exhaust manifold.

– Fit support for turbocharger free of stress:

1. Screw in all bolts finger-tight.
2. Pre-tighten bolt securing support to turbocharger to an initial torque of 10 Nm.
3. Pre-tighten bolt securing support to sump (top section) to an initial torque of 10 Nm.
4. Tighten bolt securing support to turbocharger to final torque (40 Nm).
5. Tighten bolts securing support to sump (top section) to final torque (22 Nm).

– Install exhaust gas temperature sender 1 for bank 2 - G236- ⇒ page 281 .

– Install coolant pipe (left-side) ⇒ page 232 .

– Install starter catalytic converter (left-side) ⇒ page 295 .

– Install subframe ⇒ Rep. gr. 40 .

– Tighten subframe bolts only to specified torque (do not turn further). Do not tighten bolts to final setting until after wheel alignment check has been performed ⇒ Rep. gr. 40 .

WARNING

The vehicle must not be driven at this stage.

– Install anti-roll bar ⇒ Rep. gr. 40 .

– Install radiator cowl ⇒ page 246 .

– Install radiator ⇒ page 242 .

– Fill up with engine oil and check engine oil level ⇒ Maintenance ; Booklet 404 .

Note

Do not reuse coolant.

– Fill cooling system ⇒ page 216 .

– Perform wheel alignment check ⇒ Rep. gr. 44 .

Protected by copyright. Copying for private or commercial purposes, in part or in whole, is not permitted unless authorised by AUDI AG. AUDI AG does not guarantee or accept any liability with respect to the correctness of information in this document. Copyright by AUDI AG.

WARNING

Tighten bolts for subframe to final setting after performing wheel alignment check.

Tightening torques

Component		Nm
Turbocharger to exhaust manifold		20 + 90° 1)2)3)
Oil return pipe to:	Turbocharger	10
	Sump (top section)	10
Coolant line to turbocharger		25
Support for turbocharger to:	Sump (top section)	22
	Turbocharger	40 3)4)
Coolant pipe to top section of sump		9
Oil supply line to turbocharger		15
Air pipe (front left) to engine		9
Air pipe to engine cross member		9
Bracket for charge air cooler to body		9
Hose clips (9 mm wide)		3
Hose clips (13 mm wide)		5.5

- 1) Renew bolts.
- 2) 90° = one quarter turn.
- 3) Coat threads and contact surface with high-temperature paste; for high-temperature paste refer to ⇒ Electronic parts catalogue .
- 4) Tightening sequence ⇒ page 257 .

1.3 Removing and installing turbocharger (right-side)

Special tools and workshop equipment required

- Used oil collection and extraction unit - V.A.G 1782- or -VAS 6622A-

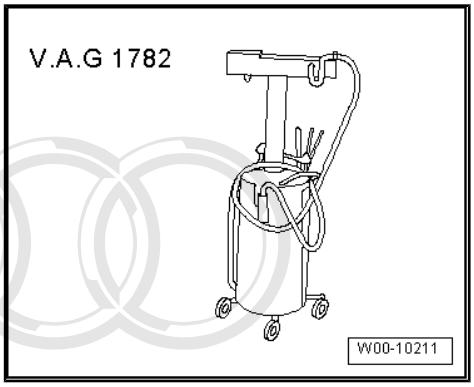

- Hose clip pliers - VAS 6362-

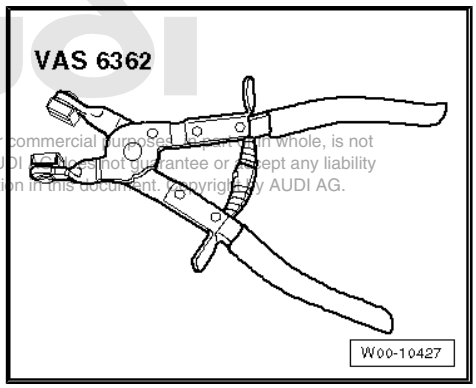

Protected by copyright. Copying for private or commercial purposes, in part or in whole, is not permitted unless authorised by AUDI AG. AUDI AG does not guarantee or accept any liability with respect to the correctness of information in this document. Copyright by AUDI AG.

Removing

Caution

If the turbocharger has suffered mechanical damage (e.g. damaged compressor wheel), it is not sufficient merely to fit a new turbocharger. The following work must be performed in order to avoid further damage:

- *Check air cleaner housing, air filter element and air hoses for dirt and foreign particles.*
- *Check the entire charge air system (including the charge air cooler) for foreign matter.*
- *If foreign matter is found in the charge air system, clean all relevant ducts and hoses and renew charge air cooler if necessary.*

Note

- *Rules for cleanliness* *⇒ page 5* *.*
- *All cable ties which are released or cut open when removing must be fitted in the same position when installing.*

Caution

Observe notes on procedure for disconnecting the battery ⇒ Electrical system; Rep. gr. 27 .

– Switch off ignition.

Note

To make sure you can still move the front wheels when the battery has been disconnected, only disconnect the battery with the ignition key inserted.

– Remove luggage compartment side trim cover (right-side) -arrows-.

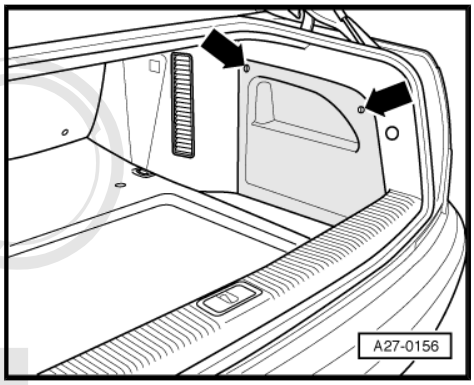

– Remove cover -1- over battery.

Protected by copyright. Copying for private or commercial purposes, in part or in whole, is not permitted unless authorised by AUDI AG. AUDI AG does not guarantee or accept any liability with respect to the correctness of information in this document. Copyright by AUDI AG.

Note

Disregard -item 2-.

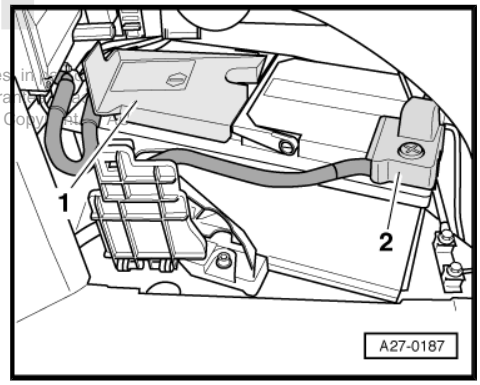

– Disconnect earth cable -arrow- at battery.

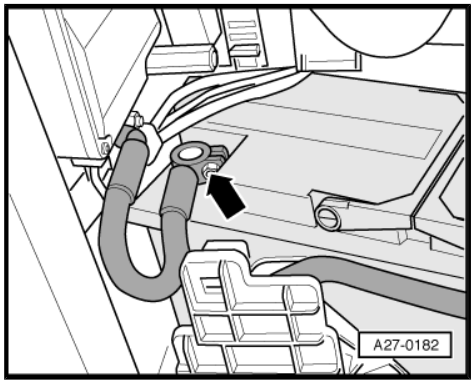

– Carefully pull engine cover panel off four retaining pins one after the other -arrows-.

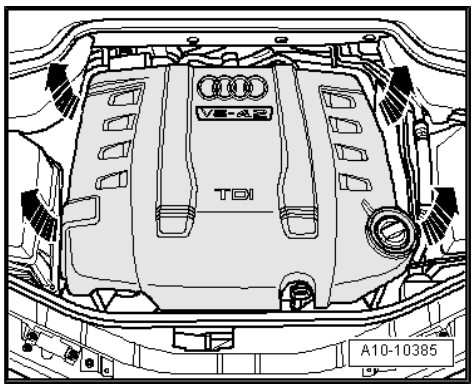

– Remove cover above coolant expansion tank -arrows-.

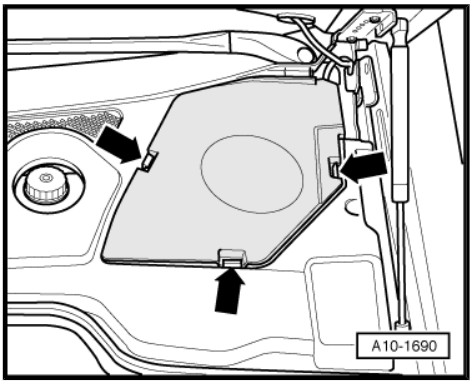

> **WARNING**
>
> *Hot steam or hot coolant can escape when expansion tank is opened; cover filler cap with cloth and open carefully.*

– Open filler cap on coolant expansion tank.
– Remove both front wheels.
– Drain off coolant ⇒ page 215 .
– Position used oil collection and extraction unit below engine.
– Drain off engine oil.
– Remove front sections of front wheel housing liners (left and right) ⇒ Rep. gr. 66 .
– Remove bumper cover (front) ⇒ Rep. gr. 63 .

– Remove bolts -1-, -3- and -5-.
– Remove bolt -2- and nut -6-.
– Slacken hose clip -4- and detach air pipe with hose.
– Detach air duct from charge air cooler (right-side).

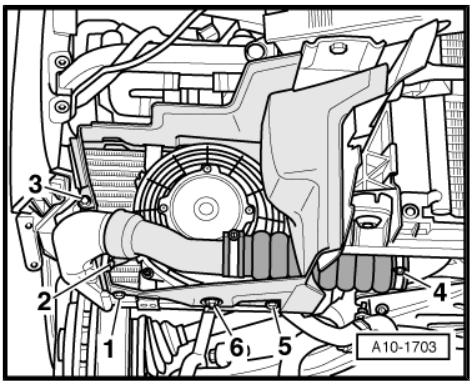

– Detach air intake hose -arrow- from charge air cooler (right-side).

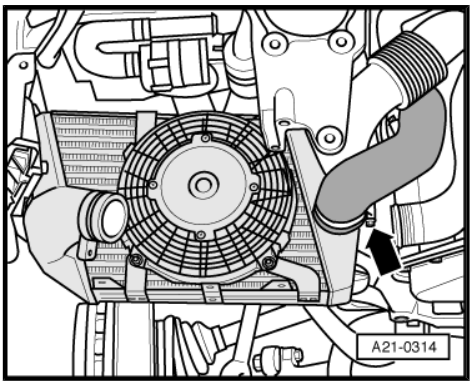

Protected by copyright. Copying for private or commercial purposes, in part or in whole, is not permitted unless authorized by AUDI AG. AUDI AG does not guarantee or assume any liability with respect to the correctness of information in this document. Copyright by AUDI AG.

– Remove bolts -arrows- and detach bracket for charge air cooler.
– Take off charge air cooler -2- (right-side).

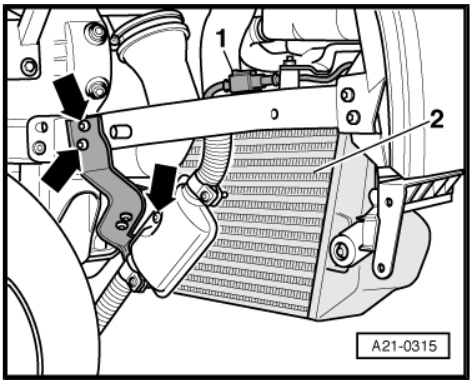

> **Note**
>
> *Disregard -item 1-.*

– Unplug electrical connector for heater element for crankcase breather - N79- -item 1-.
– Unscrew securing bolt -2- and securing bolt -5-.
– Loosen hose clips -1- and -4- and remove air intake hose between air cleaner housing and turbocharger (right-side).

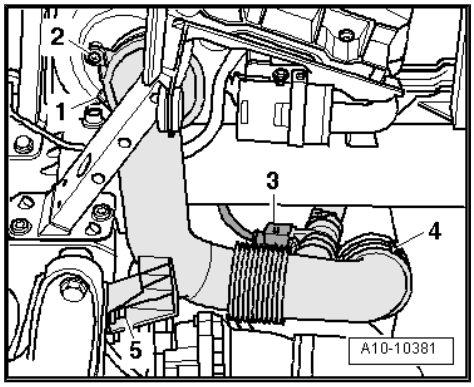

– Remove bolts -arrows- and detach top section of air cleaner housing (right-side).

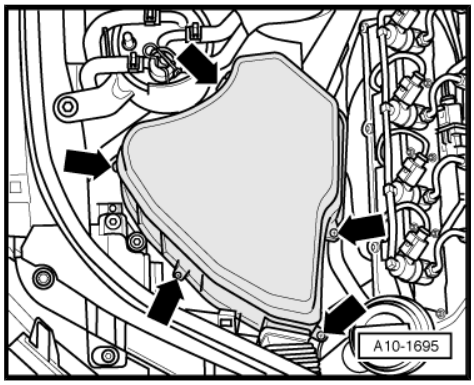

– Unplug electrical connector -1- at air mass meter and move wiring clear.
– Remove bolts -arrows- and detach bottom section of air cleaner housing (right-side).
– Remove starter catalytic converter (right-side) ⇒ page 301 .

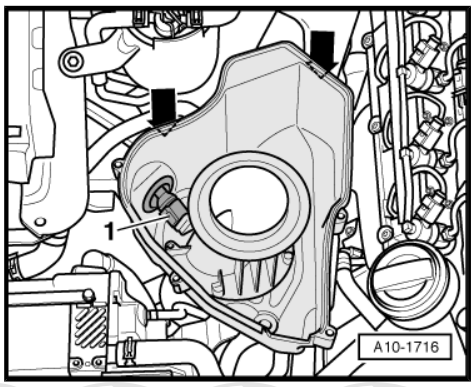

– Remove bolts -2- and -3- and detach support for turbocharger.
– Remove bolts -1- and detach bracket for wiring harness.

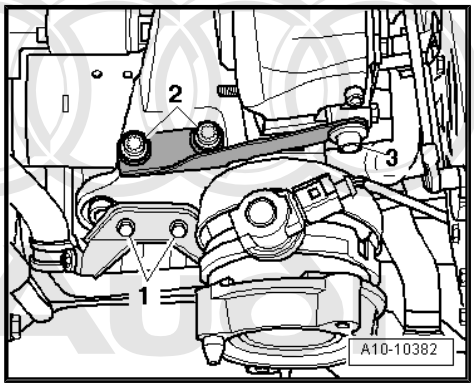

Protected by copyright. Copying for private or commercial purposes, in part or in whole, is not permitted unless authorised by AUDI AG. AUDI AG does not guarantee or accept any liability with respect to the correctness of information in this document. Copyright by AUDI AG.

– Unplug electrical connector -1- at engine mounting (right-side).
– Remove bolts -arrows- and detach engine support with engine mounting.

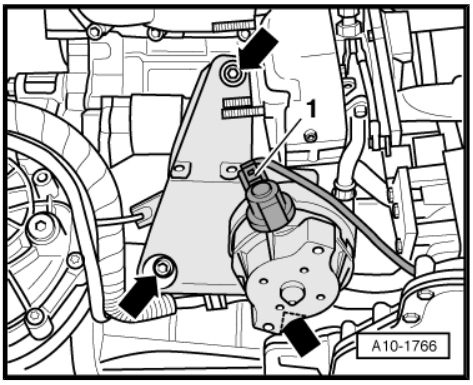

– Unplug electrical connector -1-.
– Detach air intake hoses -2- and -3- at turbocharger.

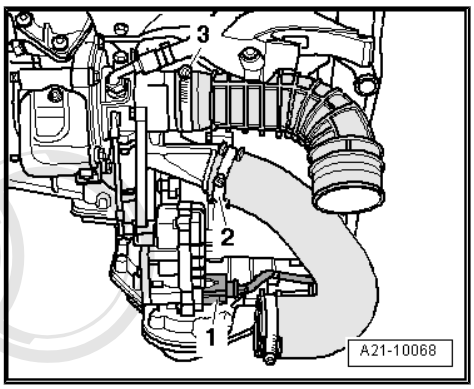

– Remove bolts -1- and -2-.
– Remove oil return hose -3- from sump (centre section).
– Remove oil return line.

Protected by copyright. Copying for private or commercial purposes, in part or in whole, is not permitted unless authorised by AUDI AG. AUDI AG does not guarantee or accept any liability with respect to the correctness of information in this document. Copyright by AUDI AG.

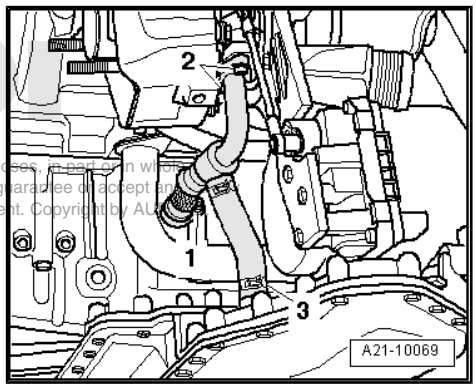

– Detach coolant line -arrow- at rear of turbocharger.

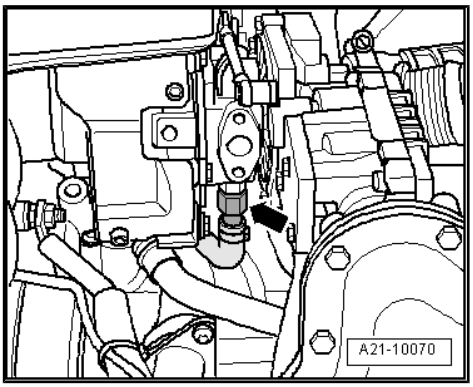

– Unscrew bolts -arrows- and remove heat shield from exhaust manifold.

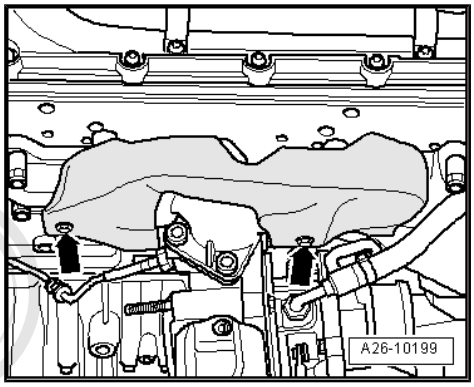

– Unbolt coolant line -1- from turbocharger and detach coolant hose -3- from coolant pipe.

– Unscrew oil supply line -2- from turbocharger.

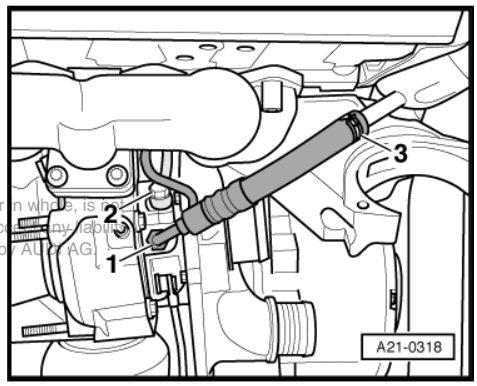

Protected by copyright. Copying for private or commercial purposes, in part or in whole, is not permitted unless authorised by AUDI AG. AUDI AG does not guarantee or accept any liability with respect to the correctness of information in this document. Copyright by AUDI AG.

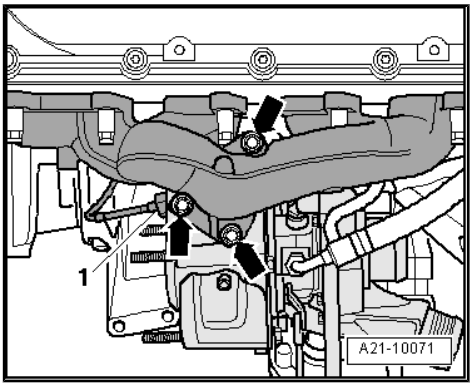

– Unscrew exhaust gas temperature sender 1 - G235- -item 1-.
– Unscrew bolts -arrows- at top of turbocharger.
– Take out turbocharger downwards.

Installing

Installation is carried out in the reverse order; note the following:

Note

- *Renew gaskets, seals, O-rings and self-locking nuts.*
- *Hose connections and hoses for charge air system must be free of oil and grease before assembly.*
- *Secure all hose connections with the correct type of hose clips (same as original equipment) ⇒ Electronic parts catalogue .*
- *Charge air system must be free of leaks.*
- *Fit all cable ties in the original positions when installing.*
- *Fill turbocharger with engine oil at connection for oil supply line.*
- *After installing turbocharger, allow engine to idle for approx. 1 minute and do not rev up immediately to ensure turbocharger is supplied with oil.*

This document is copyright. Copying for private or commercial purposes, in part or in whole, is not permitted unless authorised by AUDI AG. AUDI AG does not guarantee or accept any liability with respect to the correctness of information in this document. Copyright by AUDI AG.

– Install exhaust gas temperature sender 1 - G235- ⇒ page 280 .
– Install engine support ⇒ page 46 .
– Install starter catalytic converter (right-side) ⇒ page 301 .
– Install subframe ⇒ Rep. gr. 40 .
– Tighten subframe bolts only to specified torque (do not turn further). Do not tighten bolts to final setting until after wheel alignment check has been performed ⇒ Rep. gr. 40 .

WARNING

The vehicle must not be driven at this stage.

– Install anti-roll bar ⇒ Rep. gr. 40 .
– Install charge air cooler (right-side) ⇒ page 271 .
– Install bumper cover (front) ⇒ Rep. gr. 63 .
– Install front sections of front wheel housing liners (left and right) ⇒ Rep. gr. 66 .
– Observe notes on procedures required after connecting battery ⇒ Electrical system; Rep. gr. 27 .
– Fill up with engine oil and check engine oil level ⇒ Maintenance ; Booklet 404 .

Note

Do not reuse coolant.

– Fill cooling system ⇒ page 216 .
– Perform wheel alignment check ⇒ Rep. gr. 44 .

WARNING

Tighten bolts for subframe to final setting after performing wheel alignment check.

Tightening torques

Component		Nm
Turbocharger to exhaust manifold		20 + 90° 1)2)3)
Oil supply line to turbocharger		15
Coolant supply line to turbocharger		25
Coolant return line to turbocharger		30
Oil return pipe to:	Turbocharger	10
	Sump (top section)	10
Heat shield to exhaust manifold		9
Support for turbocharger to:	Turbocharger	40 3)
	Engine support	22
Bracket for wiring harness to engine support		9
Hose clips (9 mm wide)		3
Hose clips (13 mm wide)		5.5

- 1) Renew bolts.
- 2) 90° = one quarter turn.
- 3) Coat threads and contact surface with high-temperature paste; for high-temperature paste refer to ⇒ Electronic parts catalogue .

1.4 Charge air cooling - exploded view

Copyright by AUDI AG. This document is for private and non-commercial use only. Any reproduction, in part or in whole, is not permitted unless authorised by AUDI AG. AUDI AG does not guarantee or accept any liability with respect to the correctness of information in this document. Copyright by AUDI AG.

Note

Illustration shows left-side charge air cooler.

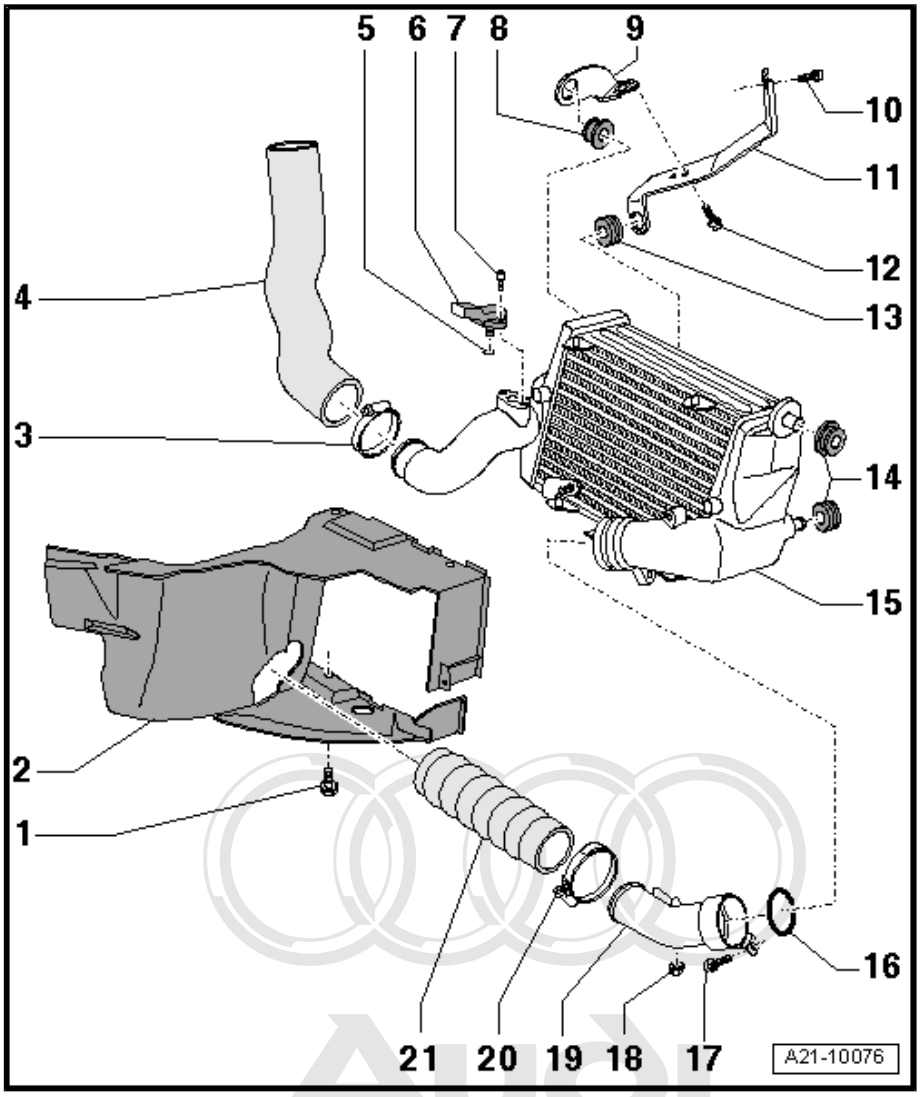

1 - 5 Nm

2 - Front air duct

3 - Retaining clip, 5.5 Nm
- ❑ Reinforced

4 - Air hose
- ❑ Between turbocharger and charge air cooler
- ❑ Must be free of oil and grease when installing

5 - O-ring
- ❑ Renew

6 - Charge pressure sender - G31-
- ❑ Removing and installing ⇒ page 270

7 - 9 Nm

8 - Rubber grommet

9 - Bracket

10 - 9 Nm

11 - Bracket

12 - 9 Nm

13 - Rubber grommet

14 - Rubber grommets

15 - Charge air cooler
- ❑ Removing and installing ⇒ page 268

16 - O-ring
- ❑ Renew

17 - 9 Nm

18 - 9 Nm

19 - Air pipe

20 - Retaining clip, 5.5 Nm
- ❑ Reinforced

21 - Air hose
- ❑ Between charge air cooler and air pipe (left-side)
- ❑ Must be free of oil and grease when installing

Protected by copyright. Copying for private or commercial purposes, in part or in whole, is not permitted unless authorised by AUDI AG. AUDI AG does not guarantee or accept any liability with respect to the correctness of information in this document. Copyright by AUDI AG.

1.5 Removing and installing charge air cooler (left-side)

Removing

– Remove both front wheels.

– Open quick-release fasteners -1- and remove noise insulation (front).

– Remove front sections of front wheel housing liners (left and right) ⇒ Rep. gr. 66 .

– Remove bumper cover (front) ⇒ Rep. gr. 63 .

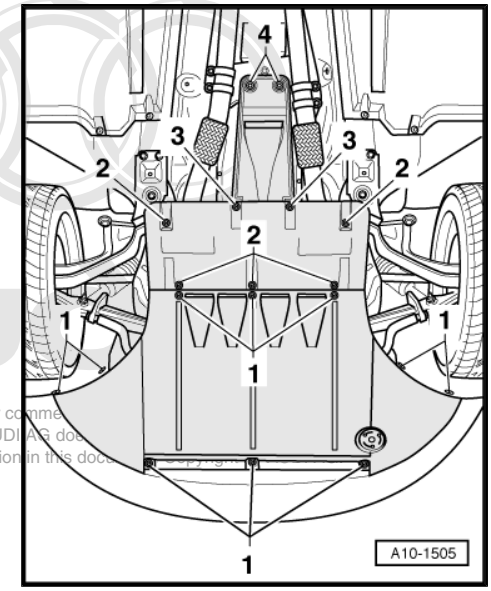

Protected by copyright. Copying for private or commercial purposes, in part, is not permitted unless authorised by AUDI AG. AUDI AG does not guarantee or assume any liability with respect to the correctness of information in this document.

– Remove bolts -1-, -3- and -5-.

– Remove bolt -4- and nut -6-.

– Slacken hose clip -2- and detach air pipe.

– Detach air duct from charge air cooler (left-side).

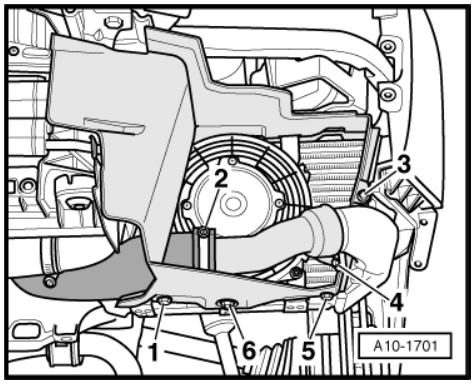

– Remove air hose (front left) -arrows-.

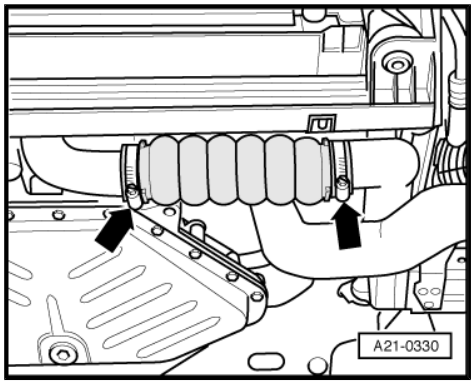

– Unplug electrical connector -arrow- at charge pressure sender - G31- .

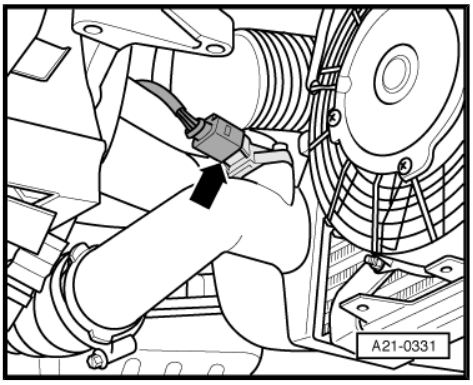

– Unplug electrical connector -2-.
– Remove bolts -arrows- and detach bracket for charge air cooler.
– Take off charge air cooler -1- (left-side).

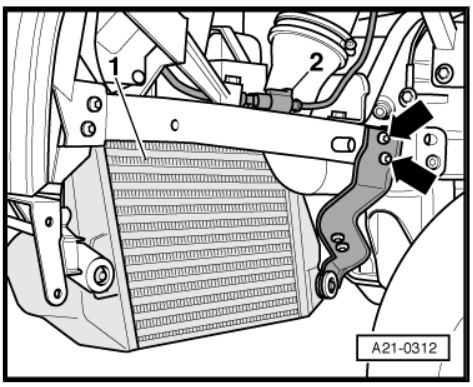

Installing

Installation is carried out in the reverse order; note the following:

Note

- *Renew O-rings.*
- *Hose connections and hoses for charge air system must be free of oil and grease before assembly.*
- *Secure all hose connections with the correct type of hose clips (same as original equipment) ⇒ Electronic parts catalogue .*

– Install bumper cover (front) ⇒ Rep. gr. 63 .
– Install front sections of front wheel housing liners (left and right) ⇒ Rep. gr. 66 .

Tightening torques

Component	Nm
Bracket for charge air cooler to body	9
Air pipe to charge air cooler	9
Air duct to charge air cooler	5
Hose clips (9 mm wide)	3
Hose clips (13 mm wide)	5.5

Protected by copyright. Copying for private or commercial purposes, in part or in whole, is not permitted unless authorised by AUDI AG. AUDI AG does not guarantee or accept any liability with respect to the correctness of information in this document. Copyright by AUDI AG.

1.6 Removing and installing charge pressure sender - G31-

Removing

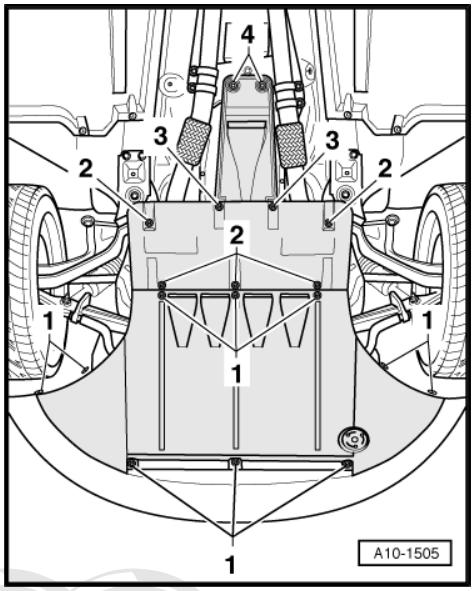

- Remove both front wheels.
- Open quick-release fasteners -1- and remove noise insulation (front).
- Remove front sections of front wheel housing liners (left and right) ⇒ Rep. gr. 66 .
- Remove bumper cover (front) ⇒ Rep. gr. 63 .

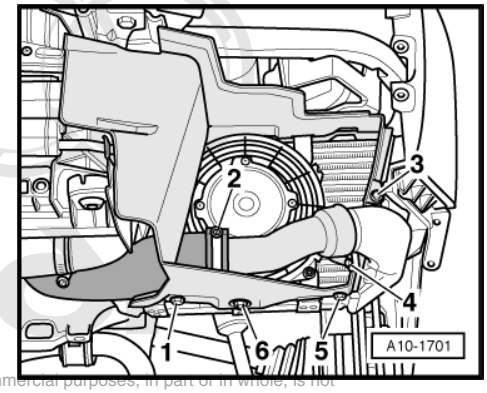

- Remove bolts -1-, -3- and -5-.
- Remove bolt -4- and nut -6-.
- Slacken hose clip -2- and detach air pipe.
- Detach air duct from charge air cooler (left-side).

Protected by copyright. Copying for private or commercial purposes, in part or in whole, is not permitted unless authorised by AUDI AG. AUDI AG does not guarantee or accept any liability with respect to the correctness of information in this document. Copyright by AUDI AG.

– Unplug electrical connector -arrow- at charge pressure sender - G31- .

– Unscrew bolts and remove charge pressure sender.

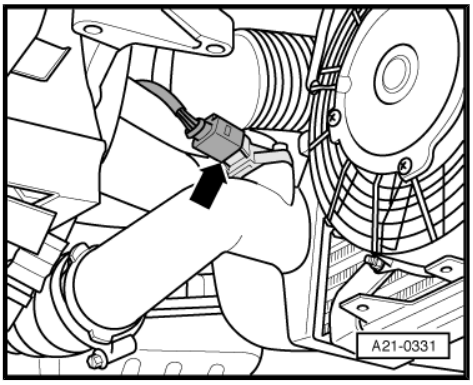

Installing

Installation is carried out in the reverse order; note the following:

Note

- *Renew O-rings.*
- *Hose connections and hoses for charge air system must be free of oil and grease before assembly.*
- *Secure all hose connections with the correct type of hose clips (same as original equipment) ⇒ Electronic parts catalogue .*

– Install bumper cover (front) ⇒ Rep. gr. 63 .

– Install front sections of front wheel housing liners (left and right) ⇒ Rep. gr. 66 .

Tightening torques

Component	Nm
Charge pressure sender - G31- to charge air cooler	5
Air pipe to charge air cooler	9
Air duct to charge air cooler	9
Hose clips (9 mm wide)	3
Hose clips (13 mm wide)	5.5

1.7 Removing and installing charge air cooler (right-side)

Removing

– Remove both front wheels.

– Open quick-release fasteners -1- and remove noise insulation (front).

Protected by copyright. Copying for private or commercial purposes, in part or in whole, is not permitted unless authorised by AUDI AG. AUDI AG does not guarantee or accept any liability with respect to the correctness of information in this document. Copyright by AUDI AG.

– Remove front sections of front wheel housing liners (left and right) ⇒ Rep. gr. 66 .

– Remove bumper cover (front) ⇒ Rep. gr. 63 .

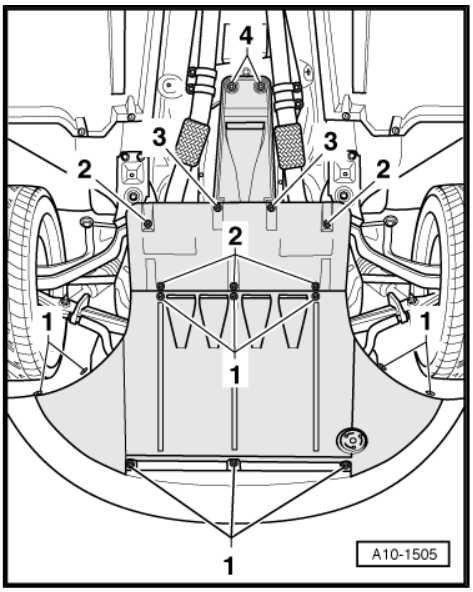

– Remove bolts -1-, -3- and -5-.
– Remove bolt -2- and nut -6-.
– Slacken hose clip -4- and detach air pipe with hose.
– Detach air duct from charge air cooler (right-side).

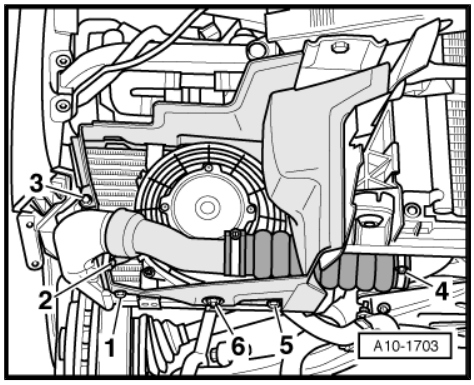

– Detach air intake hose -arrow- from charge air cooler (right-side).

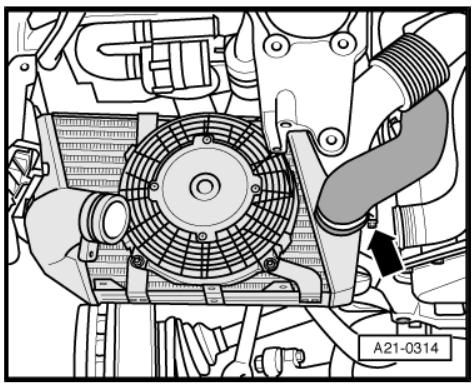

– Unplug electrical connector -1-.
– Remove bolts -arrows- and detach bracket for charge air cooler.
– Take off charge air cooler -2- (right-side).

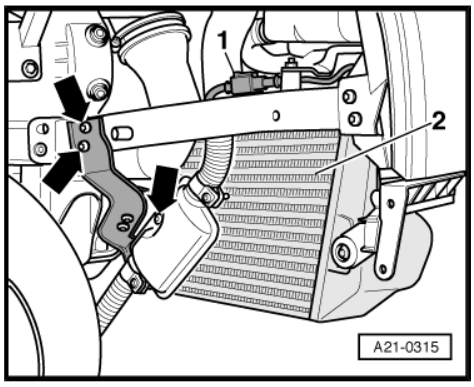

Installing

Installation is carried out in the reverse order; note the following:

Note

- *Renew O-rings.*
- *Hose connections and hoses for charge air system must be free of oil and grease before assembly.*
- *Secure all hose connections with the correct type of hose clips (same as original equipment) ⇒ Electronic parts catalogue .*

– Install bumper cover (front) ⇒ Rep. gr. 63 .
– Install front sections of front wheel housing liners (left and right) ⇒ Rep. gr. 66 .

Tightening torques

Component	Nm
Bracket for charge air cooler to body	9
Air pipe to charge air cooler	9
Air duct to charge air cooler	9
Hose clips (9 mm wide)	3
Hose clips (13 mm wide)	5.5

Protected by copyright. Copying for private or commercial purposes, in part or in whole, is not permitted unless authorised by AUDI AG. AUDI AG does not guarantee or accept any liability with respect to the correctness of information in this document. Copyright by AUDI AG.

26 – Exhaust system

1 Removing and installing parts of exhaust system

⇒ “1.1 Exhaust system - exploded view”, page 273

⇒ “1.2 Emission control - exploded view”, page 277

⇒ “1.3 Removing and installing exhaust gas temperature sender 1 G235 ”, page 280

⇒ “1.4 Removing and installing exhaust gas temperature sender 1 for bank 2 G236 ”, page 281

⇒ “1.5 Removing and installing exhaust gas temperature sender 2 G448 ”, page 282

⇒ “1.6 Removing and installing exhaust gas temperature sender 2 for bank 2 G449 ”, page 284

⇒ “1.7 Removing and installing temperature sender 2 before particulate filter G498 ”, page 288

⇒ “1.8 Removing and installing temperature sender before particulate filter G506 ”, page 291

⇒ “1.9 Separating Y-pipe and rear silencers”, page 294

⇒ “1.10 Removing and installing starter catalytic converter (left-side)”, page 295

⇒ “1.11 Removing and installing starter catalytic converter (right-side)”, page 301

⇒ “1.12 Removing and installing exhaust pipe (left-side)”, page 306

⇒ “1.13 Removing and installing exhaust pipe (right-side)”, page 307

⇒ “1.14 Removing and installing particulate filter/main catalytic converter (left-side)”, page 309

⇒ “1.15 Removing and installing particulate filter/main catalytic converter (right-side)”, page 310

⇒ “1.16 Exhaust manifold - exploded view”, page 310

⇒ “1.17 Removing and installing exhaust manifold (left-side)”, page 312

⇒ “1.18 Removing and installing exhaust manifold (right-side)”, page 312

⇒ “1.19 Stress-free alignment of exhaust system”, page 313

⇒ “1.20 Aligning tailpipes”, page 314

⇒ “1.21 Checking exhaust system for leaks”, page 314

1.1 Exhaust system - exploded view

Copyright. Copying for private or commercial purposes, in part or in whole, is not permitted unless authorised by AUDI AG. AUDI AG does not guarantee or accept any liability with respect to the correctness of information in this document. Copyright by AUDI AG.

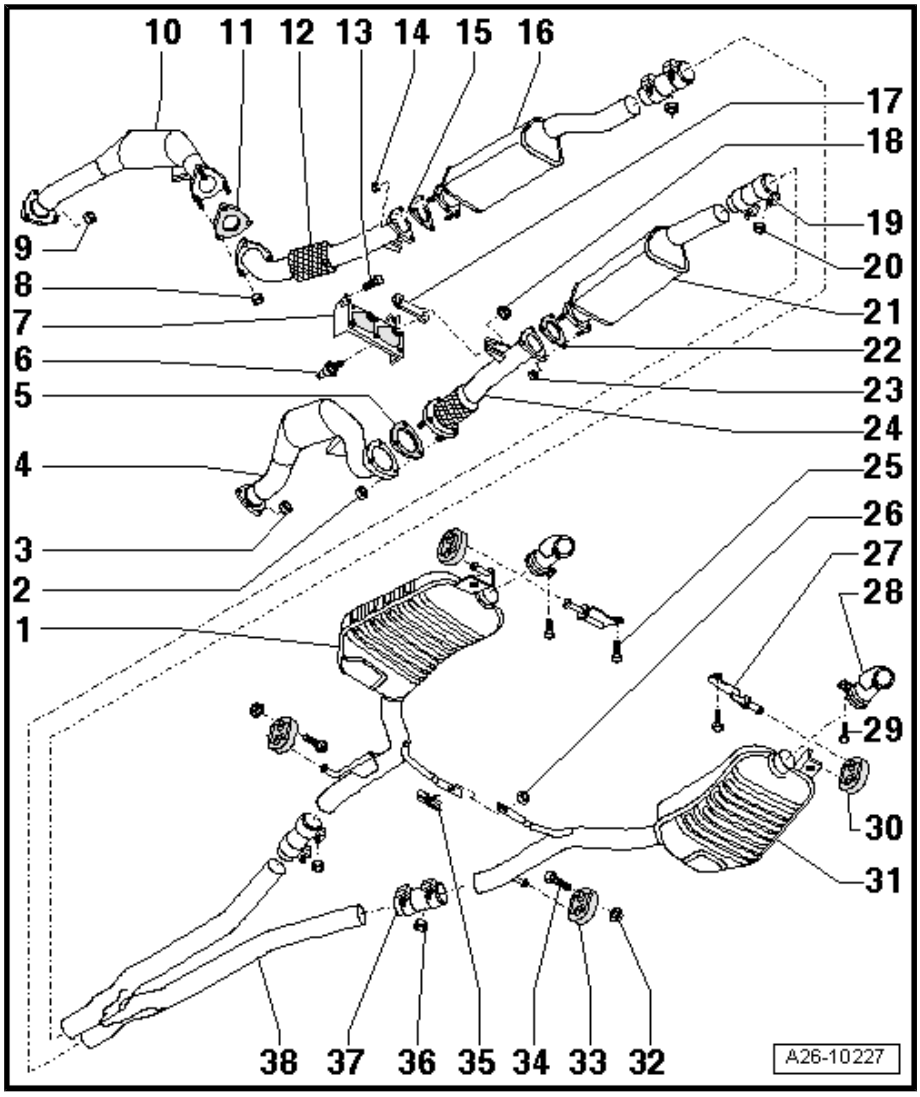

1 - Rear silencer (left-side)

- ❑ Combined with Y-pipe in one unit as original equipment. Can be renewed individually for repair purposes
- ❑ Cutting point ⇒ page 295
- ❑ Align exhaust system so it is free of stress ⇒ page 313

2 - 25 Nm

- ❑ Renew

3 - 25 Nm

- ❑ Renew

4 - Starter catalytic converter (right-side)

- ❑ Removing and installing ⇒ page 301
- ❑ Mounting components ⇒ page 277
- ❑ Align exhaust system so it is free of stress ⇒ page 313

5 - Gasket

- ❑ Renew

6 - Stud

7 - Bracket

- ❑ Mounting components ⇒ page 277

8 - 25 Nm

- ❑ Renew

9 - 25 Nm

- ❑ Renew

10 - Starter catalytic converter (left-side)

- ❑ Removing and installing ⇒ page 295
- ❑ Mounting components ⇒ page 276
- ❑ Align exhaust system so it is free of stress ⇒ page 313

11 - Gasket

- ❑ Renew

12 - Exhaust pipe (left-side)

- ❑ With flexible joint
- ❑ Do not bend flexible joint more than 10° – otherwise it can be damaged
- ❑ Removing and installing ⇒ page 306
- ❑ Align exhaust system so it is free of stress ⇒ page 313

13 - 22 Nm

14 - 25 Nm

Protected by copyright. Copying for private or commercial purposes, in part or in whole, is not permitted unless authorised by AUDI AG. AUDI AG does not guarantee or accept any liability with respect to the correctness of information in this document. Copyright by AUDI AG.

15 - Gasket

- ❑ Renew

16 - Particulate filter /main catalytic converter (left-side)
- ❑ Removing and installing ⇒ page 309
- ❑ Align exhaust system so it is free of stress ⇒ page 313
- ❑ After renewing particulate filter, perform adaption in “Guided Functions” ⇒ Vehicle diagnostic tester

17 - Bracket

18 - 18 Nm
- ❑ Renew

19 - Clamp (front)
- ❑ Before tightening, align exhaust system so it is free of stress ⇒ page 313
- ❑ Installation position ⇒ page 276
- ❑ Tighten bolt connections evenly

20 - 23 Nm

21 - Particulate filter /main catalytic converter (right-side)
- ❑ Removing and installing ⇒ page 310
- ❑ Align exhaust system so it is free of stress ⇒ page 313
- ❑ After renewing particulate filter, perform adaption in “Guided Functions” ⇒ Vehicle diagnostic tester

22 - Gasket
- ❑ Renew

23 - 25 Nm

24 - Exhaust pipe (right-side)
- ❑ With flexible joint
- ❑ Do not bend flexible joint more than 10° – otherwise it can be damaged
- ❑ Removing and installing ⇒ page 307
- ❑ Align exhaust system so it is free of stress ⇒ page 313

25 - 22 Nm

26 - 23 Nm
- ❑ Renew

27 - Mounting

28 - Tailpipe
- ❑ Align exhaust system so it is free of stress ⇒ page 313

29 - 23 Nm

30 - Rubber mounting
- ❑ Check preload ⇒ “1.19 Stress-free alignment of exhaust system”, page 313

31 - Rear silencer (right-side)
- ❑ Combined with Y-pipe in one unit as original equipment. Can be renewed individually for repair purposes
- ❑ Cutting point ⇒ page 295
- ❑ Align exhaust system so it is free of stress ⇒ page 313

32 - 23 Nm

33 - Rubber mounting
- ❑ Check preload ⇒ “1.19 Stress-free alignment of exhaust system”, page 313

34 - Bolt

Protected by copyright. Copying for private or commercial purposes, in part or in whole, is not permitted unless authorised by AUDI AG. AUDI AG does not guarantee or accept any liability with respect to the correctness of information in this document. Copyright by AUDI AG.

35 - Connecting bracket

36 - 23 Nm

37 - Clamp (rear)
- ❑ For separate replacement of Y-pipe and rear silencers

- ❑ Before tightening, align exhaust system so it is free of stress ⇒ page 313
- ❑ Installation position ⇒ page 276
- ❑ Tighten bolt connections evenly

38 - Y-pipe

- ❑ Forms one unit with the rear silencers as original equipment. Can be renewed individually for repair purposes
- ❑ Cutting point ⇒ page 295
- ❑ Align exhaust system so it is free of stress ⇒ page 313

Installation position of front clamps

– Fit clamps so that ends of bolts do not protrude beyond bottom of clamp.

• Bolt connections face outwards.

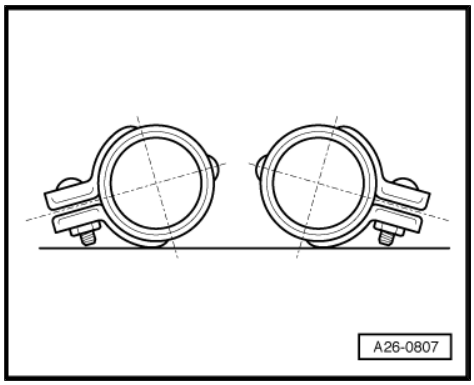

Installation position of rear clamps

– Fit clamps so that ends of bolts do not protrude beyond bottom of clamp.

• Bolt connections face one another.

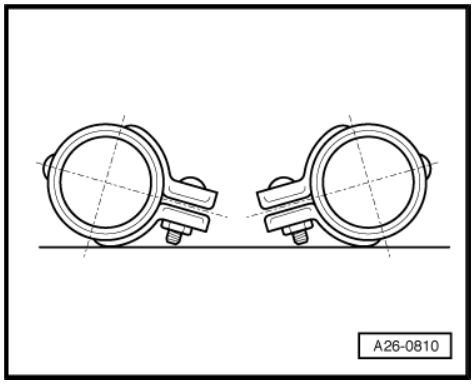

Components of exhaust pipe mountings (left-side)

1 - Bolt, 25 Nm
2 - Washer
3 - Compression spring
4 - Spacer sleeve
5 - Spacer sleeve
6 - Bracket
7 - Buffer
8 - Spacer sleeve
9 - Bolt, 25 Nm

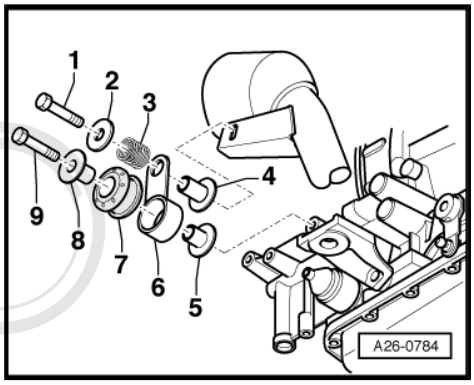

Protected by copyright. Copying for private or commercial purposes, in part or in whole, is not permitted unless authorised by AUDI AG. AUDI AG does not guarantee or accept any liability with respect to the correctness of information in this document. Copyright by AUDI AG.

Components of exhaust pipe mountings (right-side)

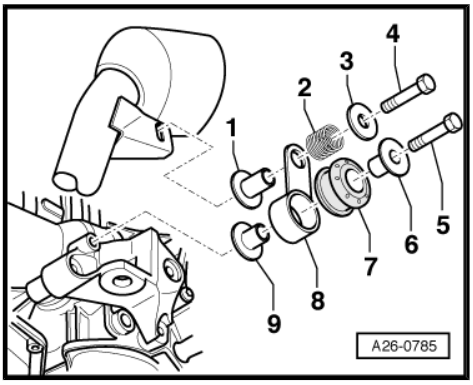

1 - Spacer sleeve
2 - Compression spring
3 - Washer
4 - Bolt, 25 Nm
5 - Bolt, 25 Nm
6 - Spacer sleeve
7 - Buffer
8 - Bracket
9 - Spacer sleeve

Components of bracket (centre)

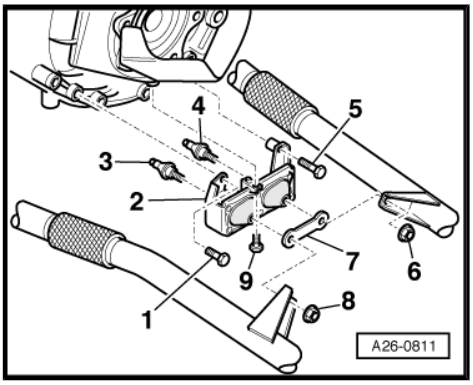

1 - Bolt, 22 Nm
2 - Bracket
3 - Stud
4 - Stud
5 - Bolt, 22 Nm
6 - Nut, self-locking, 18 Nm
7 - Bracket
8 - Nut, self-locking, 18 Nm
9 - Bolt, 22 Nm

1.2 Emission control - exploded view

Fitting locations of components on particulate filter (left-side)

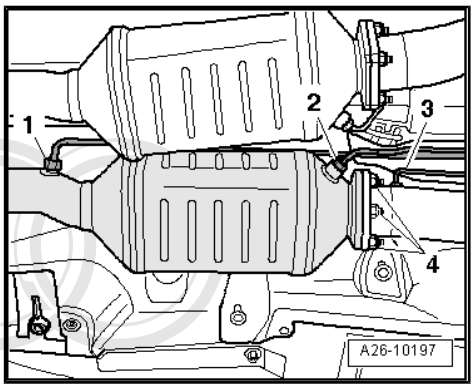

1 - Pressure pipe to pressure differential sender 2 - G524-
- ♦ Coat thread with high-temperature paste; for high-temperature paste refer to ⇒ Electronic parts catalogue
- ♦ Tighten union nut to 40 Nm

2 - Temperature sender 2 before particulate filter - G498-
- ♦ Removing and installing ⇒ page 288

3 - Pressure pipe to pressure differential sender 2 - G524-
- ♦ Coat thread with high-temperature paste; for high-temperature paste refer to ⇒ Electronic parts catalogue
- ♦ Tighten union nut to 40 Nm

Note

Disregard -item 4-.

Protected by copyright. Copying for private or commercial purposes, in part or in whole, is not permitted unless authorised by AUDI AG. AUDI AG does not guarantee or accept any liability with respect to the correctness of information in this document. Copyright by AUDI AG.

Fitting locations of components on particulate filter (right-side)

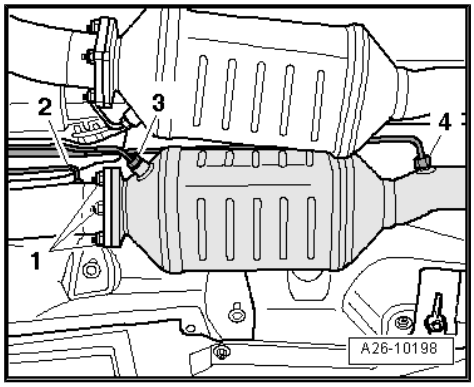

2 - Pressure pipe to pressure differential sender - G505-
- ♦ Coat thread with high-temperature paste; for high-temperature paste refer to ⇒ Electronic parts catalogue
- ♦ Tighten union nut to 40 Nm

3 - Temperature sender before particulate filter - G506-
- ♦ Removing and installing ⇒ page 291

4 - Pressure pipe to pressure differential sender - G505-
- ♦ Coat thread with high-temperature paste; for high-temperature paste refer to ⇒ Electronic parts catalogue
- ♦ Tighten union nut to 40 Nm

Note

Disregard -item 1-.

Fitting locations on rear of gearbox

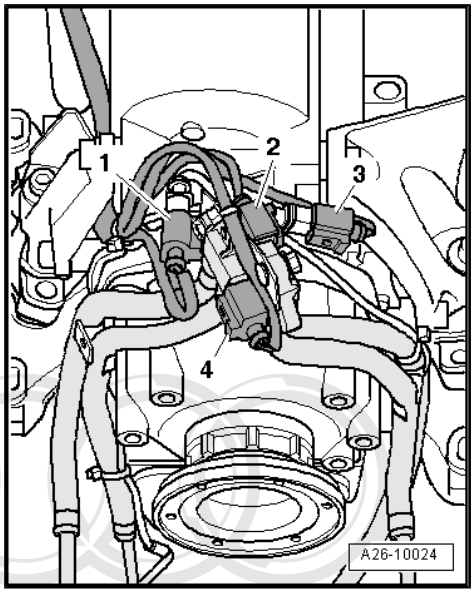

1 - Electrical connector for temperature sender 2 before particulate filter - G498-

2 - Pressure differential sender - G505-
- ♦ Removing and installing ⇒ Rep. gr. 23

3 - Electrical connector for temperature sender before particulate filter - G506-

4 - Pressure differential sender 2 - G524-
- ♦ Removing and installing ⇒ Rep. gr. 23

Fitting locations of components on starter catalytic converter (left-side)

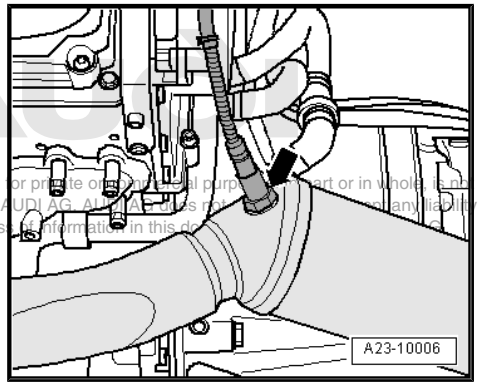

1 - Lambda probe 2 - G108-
- ♦ Removing and installing ⇒ Rep. gr. 23

Protected by copyright. Copying for private or commercial purposes, in part or in whole, is not permitted unless authorised by AUDI AG. AUDI AG does not guarantee or assume any liability with respect to the correctness of information in this document.

Fitting locations of components on starter catalytic converter (left-side) and left side of gearbox

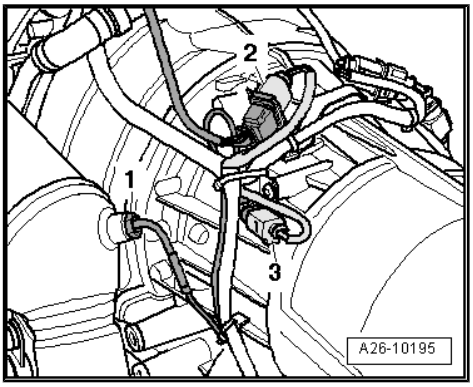

1 - Exhaust gas temperature sender 2 for cylinder bank 2 - G449-
  ♦ Removing and installing ⇒ page 284

2 - Electrical connector for Lambda probe 2 - G108-

3 - Electrical connector for exhaust gas temperature sender 2 for bank 2 - G449-

Fitting locations of components on starter catalytic converter (right-side)

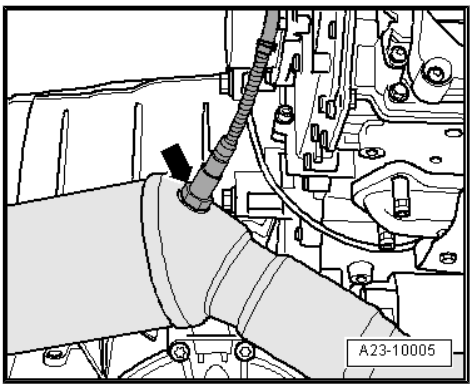

1 - Lambda probe - G39-
  ♦ Removing and installing ⇒ Rep. gr. 23

Fitting locations of components on starter catalytic converter (right-side) and right side of gearbox

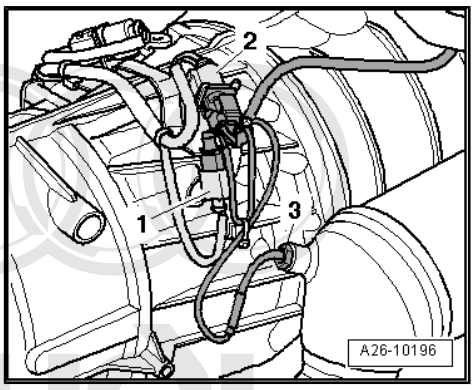

1 - Electrical connector for exhaust gas temperature sender 2 - G448-

2 - Electrical connector for Lambda probe - G39-

3 - Exhaust gas temperature sender 2 - G448-
  ♦ Removing and installing ⇒ page 282

Fitting locations of components on turbocharger (left-side)

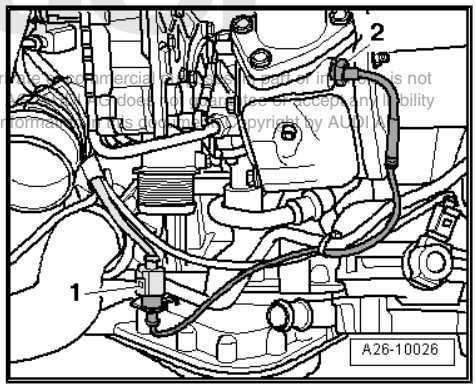

1 - Electrical connector for exhaust gas temperature sender 1 for bank 2 - G236-

2 - Exhaust gas temperature sender 1 for cylinder bank 2 - G236-
  ♦ Removing and installing ⇒ page 281

Protected by copyright. Copying for private or commercial purposes, in part or in whole, is not permitted unless authorised by AUDI AG. AUDI AG does not make any representation or warranty regarding the suitability of the contents of this document with respect to the correctness of information in this document. Copyright by AUDI AG.

1 - Electrical connector for exhaust gas temperature sender 1 - G235-

2 - Exhaust gas temperature sender 1 - G235-
- ♦ Removing and installing ⇒ page 280

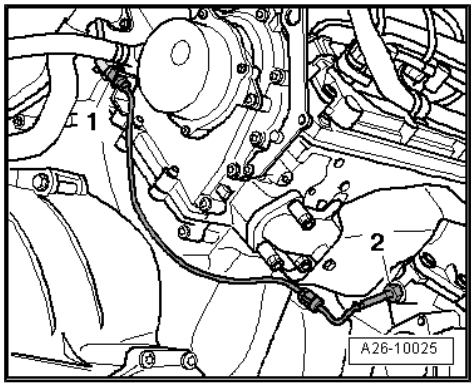

1.3 Removing and installing exhaust gas temperature sender 1 - G235-

Special tools and workshop equipment required

- ♦ Tool set - T10395 A-

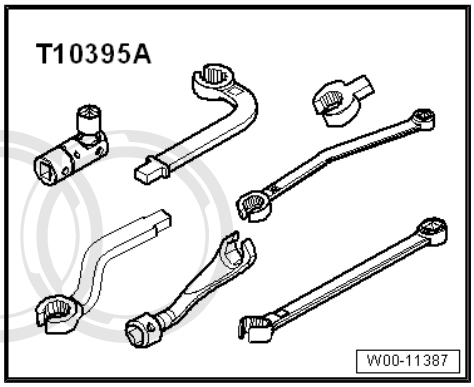

Protected by copyright. Copying for private or commercial purposes, in part or in whole, is not permitted unless authorised by AUDI AG. AUDI AG does not guarantee or accept any liability with respect to the correctness of information in this document. Copyright by AUDI AG.

Removing

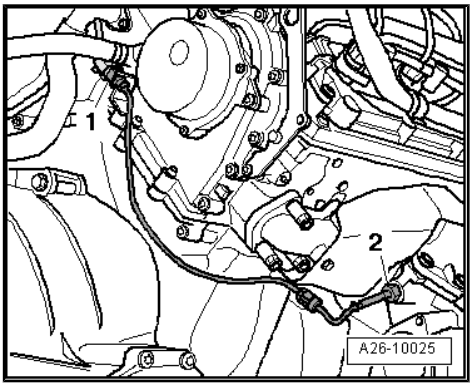

Note

All cable ties which are released or cut open when removing must be fitted in the same position when installing.

– Remove starter catalytic converter ⇒ page 301 .

– Unplug electrical connector -1- and unscrew exhaust gas temperature sender 1 - G235- -item 2-.

Installing

Installation is carried out in the reverse order; note the following:

Note

Fit all cable ties in the original positions when installing.

– Note correct installation position of exhaust gas temperature sender 1 - G235- :

• The electrical connection must point downwards in vertical direction.

– Install starter catalytic converter ⇒ page 301 .

Tightening torque

Component	Nm
Exhaust gas temperature sender 1 - G235- to turbocharger	45 [1)]
• [1)] Coat thread with high-temperature paste; for high-temperature paste refer to ⇒ Electronic parts catalogue .	

1.4 Removing and installing exhaust gas temperature sender 1 for bank 2 - G236-

Special tools and workshop equipment required

♦ Tool set - T10395 A-

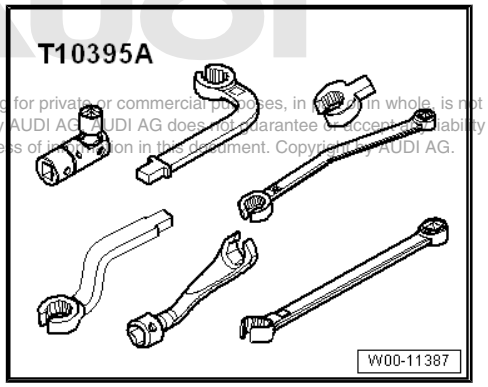

Protected by copyright. Copying for private or commercial purposes, in part or in whole, is not permitted unless authorised by AUDI AG. AUDI AG does not guarantee or accept any liability with respect to the correctness of information in this document. Copyright by AUDI AG.

Removing

Note

All cable ties which are released or cut open when removing must be fitted in the same position when installing.

– Remove charge air cooler (left-side) ⇒ page 268 .

– Unplug electrical connector -1- and unscrew exhaust gas temperature sender 1, bank 2 - G236- -item 2-.

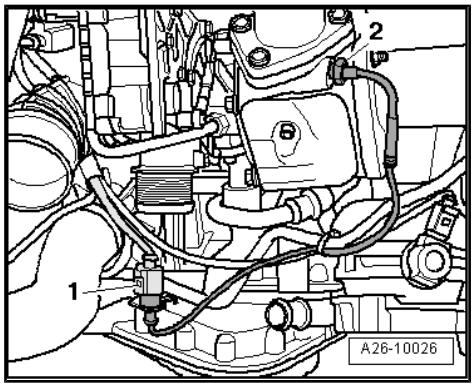

Installing

Installation is carried out in the reverse order; note the following:

Note

Fit all cable ties in the original positions when installing.

– Note correct installation position of exhaust gas temperature sender 1, bank 2 - G236- :

• The electrical connection must point downwards in vertical direction.

– Install charge air cooler (left-side) ⇒ page 268 .

Tightening torque

Component	Nm
Exhaust gas temperature sender 1, bank 2 - G236- to turbocharger	45 [1)]
• [1)] Coat thread with high-temperature paste; for high-temperature paste refer to ⇒ Electronic parts catalogue .	

1.5 Removing and installing exhaust gas temperature sender 2 - G448-

Special tools and workshop equipment required

♦ Engine and gearbox jack - V.A.G 1383 A-

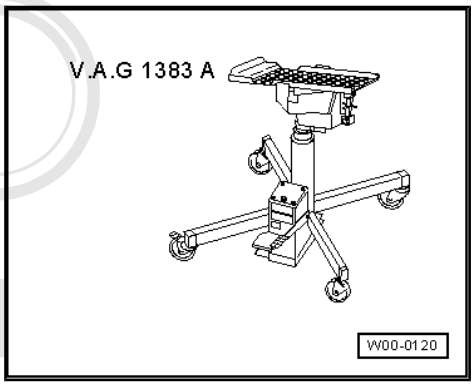

Protected by copyright. Copying for private or commercial purposes, in part or in whole, is not permitted unless authorised by AUDI AG. AUDI AG does not guarantee or accept any liability with respect to the correctness of information in this document. Copyright by AUDI AG.

♦ Tool set - T10395 A-

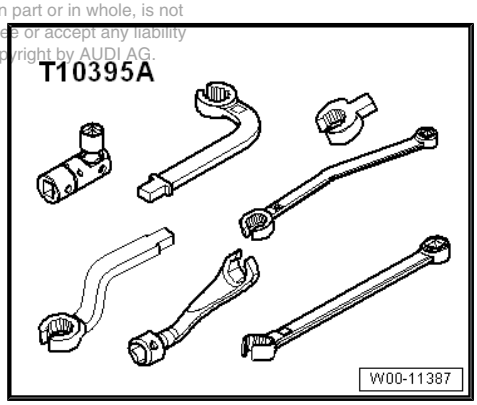

Removing

Note

All cable ties which are released or cut open when removing must be fitted in the same position when installing.

– Release fasteners -2- and -4- and remove rear noise insulation.

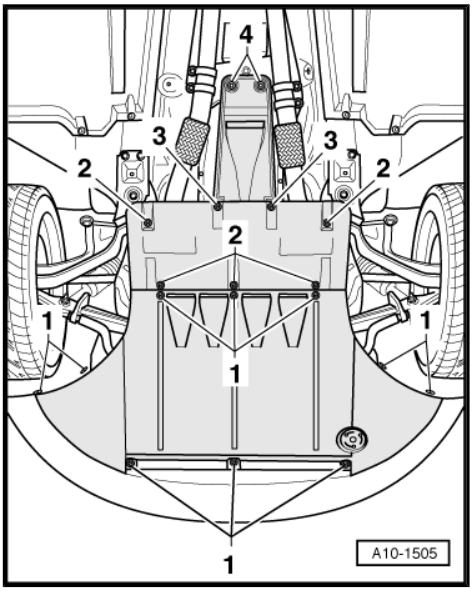

Protected by copyright. Copying for private or commercial purposes, in part or in whole, is not permitted unless authorised by AUDI AG. AUDI AG does not guarantee or accept any liability with respect to the correctness of information in this document. Copyright by AUDI AG.

– Loosen clamps -1- and -2- and move to front.

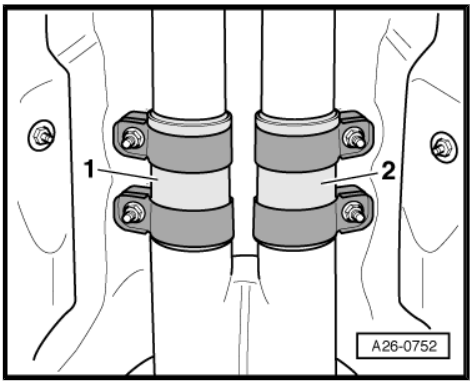

– Remove nuts on left and right -arrows- at centre bracket for exhaust pipes.

– Press studs in mounting forwards.

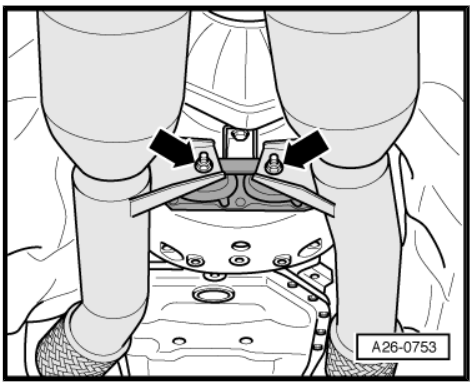

– Support tunnel cross member using engine and gearbox jack - V.A.G 1383 A- .

– Remove bolts -arrows- at tunnel cross member.

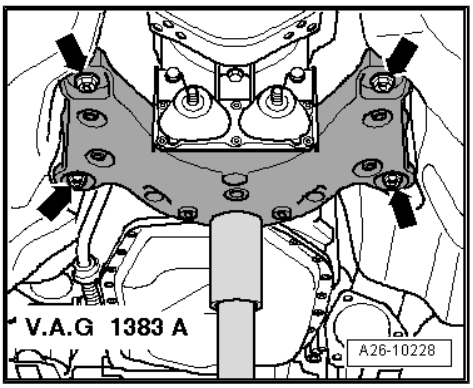

– First remove bolts -2- and -3- and then subframe bolts -1- and -4-.

– Lower gearbox and subframe slowly using engine and gearbox jack - V.A.G 1383 A- .

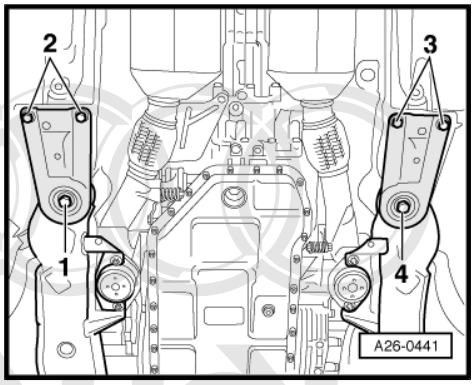

Note

Lower gearbox only as far as absolutely necessary. Bend joints of propshaft only as far as stop to avoid damaging joints.

– Detach electrical connector for exhaust gas temperature sender 2 - G448- -item 1- from bracket and unplug.

– Unscrew exhaust gas temperature sender 2 - G448- .

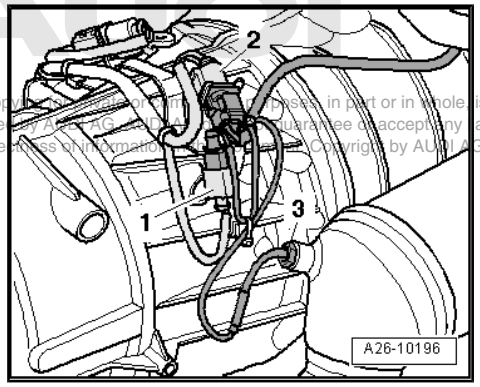

Protected by copyright. Copyright by AUDI AG. Any form of reproduction, in part or in whole, is not permitted unless authorised by AUDI AG. We do not guarantee or accept any liability with respect to the correctness of information. Copyright by AUDI AG.

Installing

Installation is carried out in the reverse order; note the following:

Note

Fit all cable ties in the original positions when installing.

– Note correct installation position of exhaust gas temperature sender 2 - G448- :

- The electrical connection must point downwards in vertical direction.
- Distance to gearbox must be at least 15 mm.

– Align exhaust system so it is free of stress ⇒ page 313 .

– Install subframe ⇒ Rep. gr. 40 .

Tightening torques

Component	Nm
Exhaust gas temperature sender 2 - G448- to starter catalytic converter	45 1)
Exhaust pipe to centre bracket	25
Tunnel cross member to body	40
• 1) Coat thread with high-temperature paste; for high-temperature paste refer to ⇒ Electronic parts catalogue .	

1.6 Removing and installing exhaust gas temperature sender 2 for bank 2 - G449-

Special tools and workshop equipment required

♦ Engine and gearbox jack - V.A.G 1383 A-

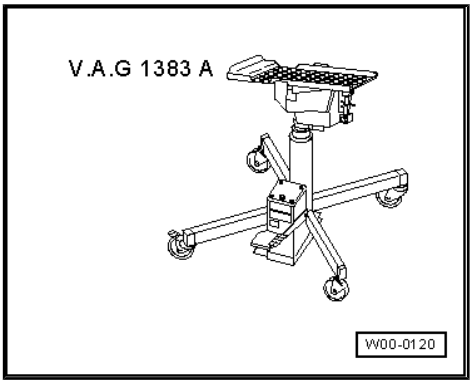

♦ Tool set - T10395 A-

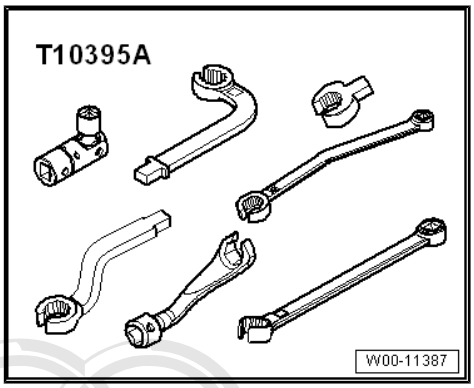

Removing

Note

All cable ties which are released or cut open when removing must be fitted in the same position when installing.

– Release fasteners -2- and -4- and remove rear noise insulation.

Protected by copyright. Copying for private or commercial purposes, in part or in whole, is not permitted unless authorised by AUDI AG. AUDI AG does not guarantee or assume any liability with respect to the correctness of information in this document.

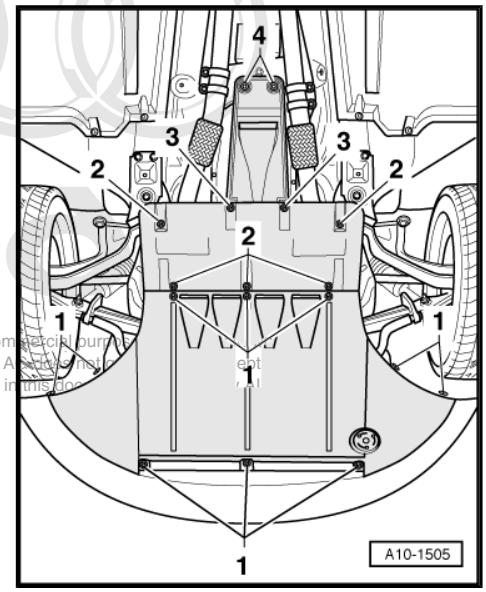

– Loosen clamps -1- and -2- and move to front.

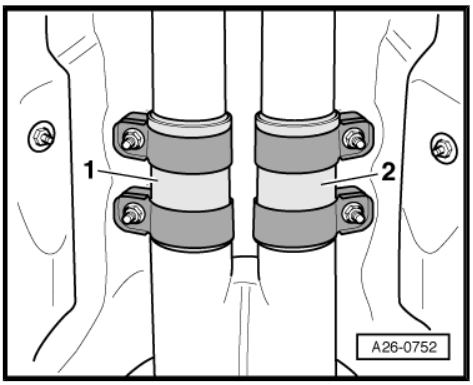

– Remove nuts on left and right -arrows- at centre bracket for exhaust pipes.
– Press studs in mounting forwards.

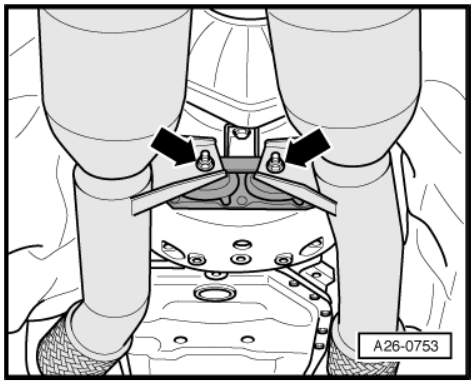

– Loosen union nut -1- and unclip pressure pipe at particulate filter/main catalytic converter (left-side).
– Loosen union nut -3- and detach pressure pipe at exhaust pipe.
– Unscrew temperature sender 2 before particulate filter - G498- -item 2- from particulate filter/main catalytic converter (left-side).

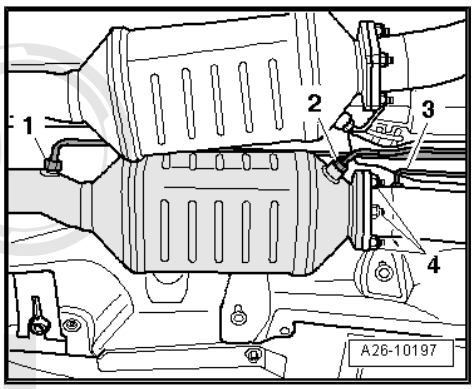

Note

Disregard -item 4-.

– Unbolt exhaust pipe (left-side) from starter catalytic converter -arrows-.
– Detach particulate filter/main catalytic converter (left side) with exhaust pipe.

Protected by copyright. Copying for private or commercial purposes, in part or in whole, is not permitted unless authorised by AUDI AG. AUDI AG does not guarantee or accept any liability with respect to the correctness of information in this document. Copyright by AUDI AG.

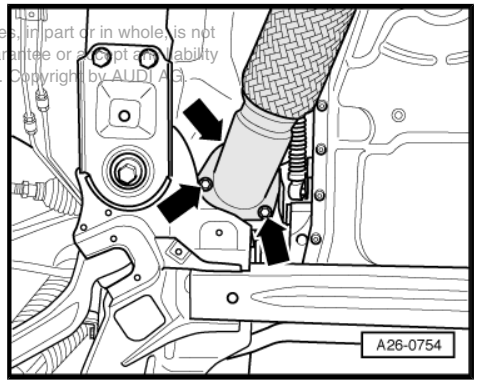

– Unscrew heat shield -A- for propshaft -arrows-.

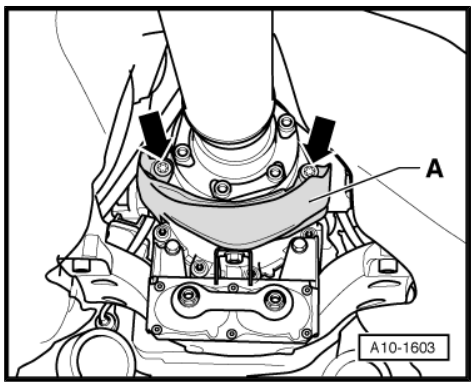

– Support tunnel cross member using engine and gearbox jack - V.A.G 1383 A- .
– Remove bolts -arrows- at tunnel cross member.

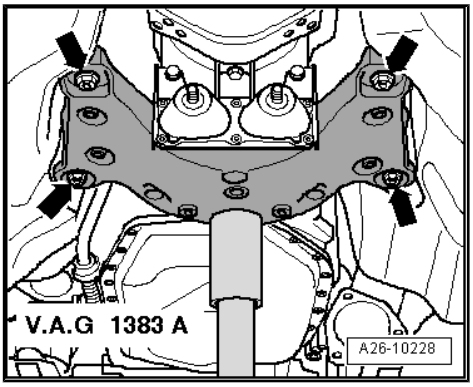

– First remove bolts -2- and -3- and then subframe bolts -1- and -4-.
– Lower gearbox and subframe slowly using engine and gearbox jack - V.A.G 1383 A- .

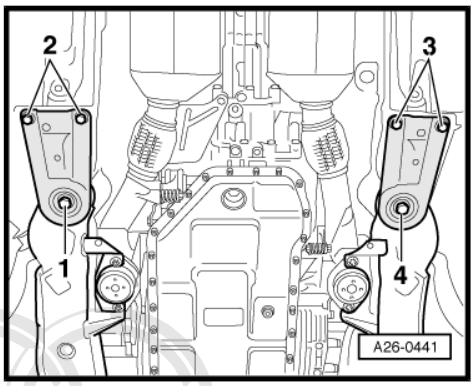

Note

Lower gearbox only as far as absolutely necessary. Bend joints of propshaft only as far as stop to avoid damaging joints.

Protected by copyright. Copying for private or commercial purposes, in part or in whole, is not permitted unless authorised by AUDI AG. AUDI AG does not guarantee or accept any liability with respect to the correctness of information in this document. Copyright by AUDI AG.

– Detach electrical connector for exhaust gas temperature sender 2, bank 2 - G449- -item 3- from retainer and unplug.

– Unscrew exhaust gas temperature sender 2, bank 2 - G449- .

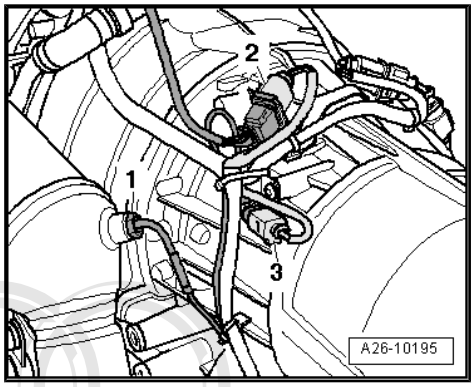

Installing

Installation is carried out in the reverse order; note the following:

Note

Fit all cable ties in the original positions when installing.

– Note correct installation position of exhaust gas temperature sender 2, bank 2 - G449- :

- The electrical connection must point downwards in vertical direction.
- Distance to gearbox must be at least 15 mm.

– Install particulate filter together with main catalytic converter ⇒ page 309 .

– Align exhaust system so it is free of stress ⇒ page 313 .

– Install subframe ⇒ Rep. gr. 40 .

Protected by copyright. Copying for private or commercial purposes, in part or in whole, is not permitted unless authorised by AUDI AG. AUDI AG does not guarantee or accept any liability with respect to the correctness of information in this document. Copyright by AUDI AG.

Tightening torques

Component	Nm
Exhaust gas temperature sender 2, bank 2 - G449- to starter catalytic converter	45 [1)]
Exhaust pipe to centre bracket	25
Tunnel cross member to body	40
Propshaft heat shield to gearbox	23
• [1)] Coat thread with high-temperature paste; for high-temperature paste refer to ⇒ Electronic parts catalogue .	

1.7 Removing and installing temperature sender 2 before particulate filter - G498-

Special tools and workshop equipment required

♦ Engine and gearbox jack - V.A.G 1383 A-

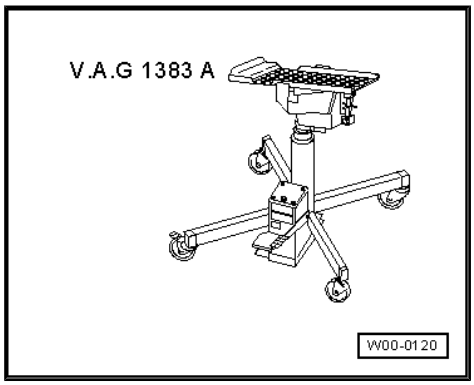

♦ Tool set - T10395 A-

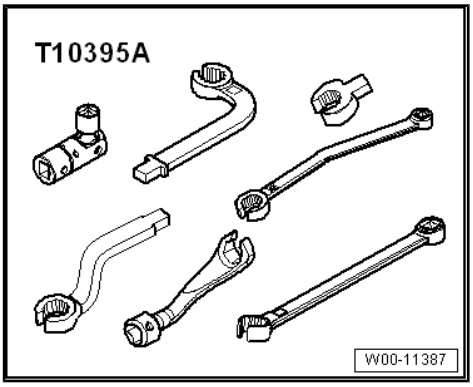

Removing

Note

All cable ties which are released or cut open when removing must be fitted in the same position when installing.

– Release fasteners -2- and -4- and remove rear noise insulation.

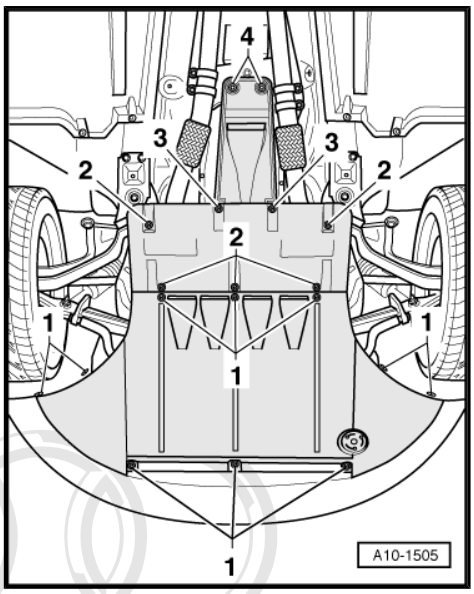

– Loosen clamps -1- and -2- and move to front.

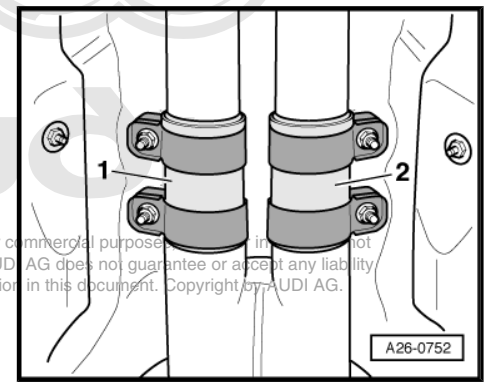

Protected by copyright. Copying for private or commercial purposes, in part or in whole, is not permitted unless authorised by AUDI AG. AUDI AG does not guarantee or accept any liability with respect to the correctness of information in this document. Copyright by AUDI AG.

– Remove nuts on left and right -arrows- at centre bracket for exhaust pipes.

– Press studs in mounting forwards.

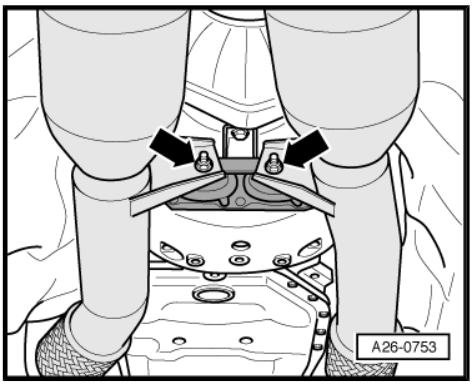

– Support tunnel cross member using engine and gearbox jack - V.A.G 1383 A- .
– Remove bolts -arrows- at tunnel cross member.

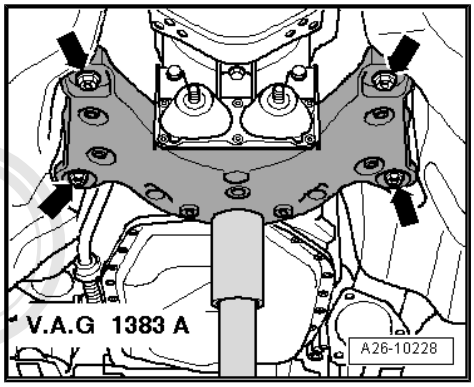

– First remove bolts -2- and -3- and then subframe bolts -1- and -4-.
– Lower gearbox and subframe slowly using engine and gearbox jack - V.A.G 1383 A- .

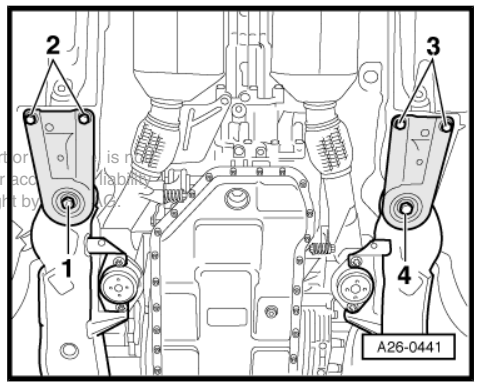

Protected by copyright. Copying for private or commercial purposes, in part or is not permitted unless authorised by AUDI AG. AUDI AG does not guarantee or acc liability with respect to the correctness of information in this document. Copyright by

Note

Propshaft must be kept straight.

– Unplug electrical connector -item 1- at temperature sender 2 before particulate filter - G498- .

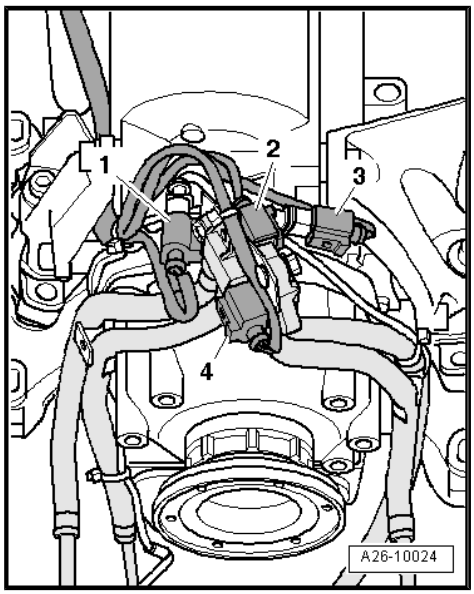

– Unscrew temperature sender 2 before particulate filter - G498- -item 2- from particulate filter/main catalytic converter (left-side).

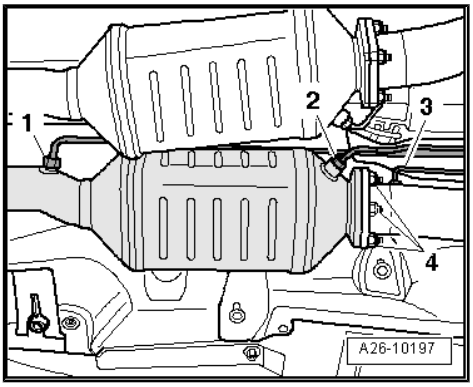

Note

Ignore items marked -1-, -3- and -4-.

Installing

Installation is carried out in the reverse order; note the following:

Note

Fit all cable ties in the original positions when installing.

– Note correct installation position of temperature sender 2 before particulate filter - G498- :

• Angle -α- = 36°

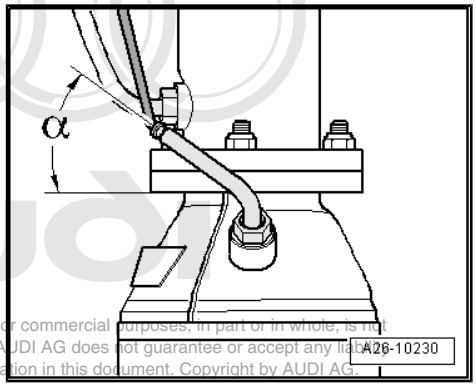

– Align exhaust system so it is free of stress ⇒ page 313 .

– Install subframe ⇒ Rep. gr. 40 .

Tightening torques

Component	Nm
Temperature sender 2 before particulate filter - G498- to starter catalytic converter	45 [1]
Exhaust pipe to centre bracket	25
Tunnel cross member to body	40
• [1] Coat thread with high-temperature paste; for high-temperature paste refer to ⇒ Electronic parts catalogue .	

Protected by copyright. Copying for private or commercial purposes, in part or in whole, is not permitted unless authorised by AUDI AG. AUDI AG does not guarantee or accept any liability with respect to the correctness of information in this document. Copyright by AUDI AG.

1.8 Removing and installing temperature sender before particulate filter - G506-

Special tools and workshop equipment required

♦ Engine and gearbox jack - V.A.G 1383 A-

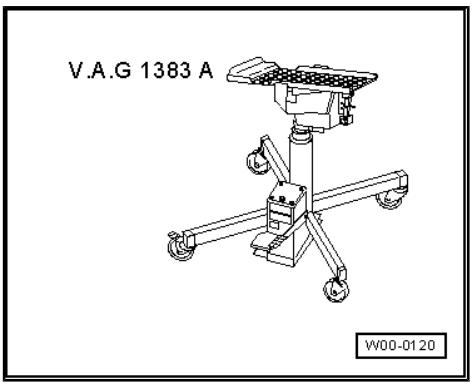

♦ Tool set - T10395 A-

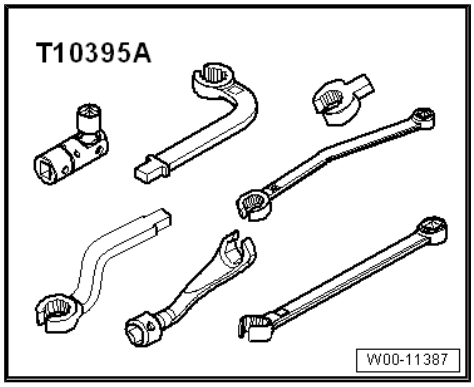

Removing

Note

All cable ties which are released or cut open when removing must be fitted in the same position when installing.

– Release fasteners -2- and -4- and remove rear noise insulation.

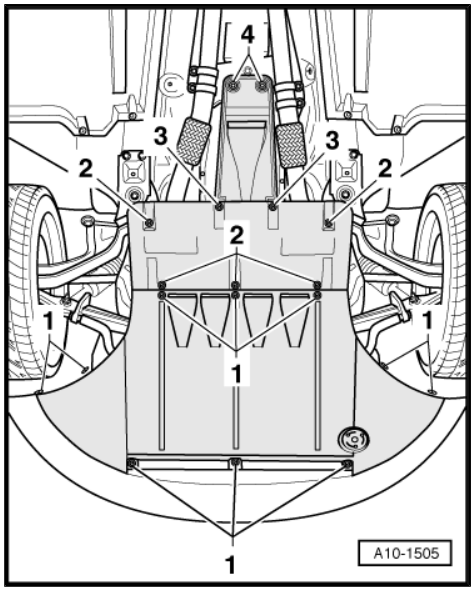

– Loosen clamps -1- and -2- and move to front.

Protected by copyright. Copying for private or commercial purposes, in part or in whole, is not permitted unless authorised by AUDI AG. AUDI AG does not guarantee or accept any liability with respect to the correctness of information in this document. Copyright by AUDI AG.

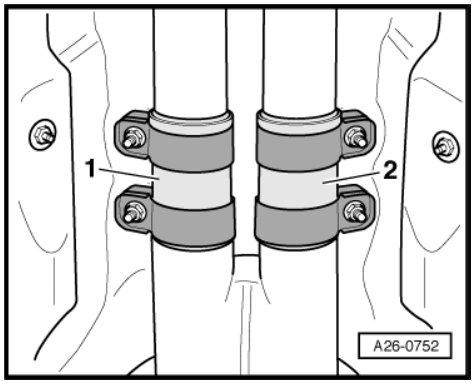

– Remove nuts on left and right -arrows- at centre bracket for exhaust pipes.

– Press studs in mounting forwards.

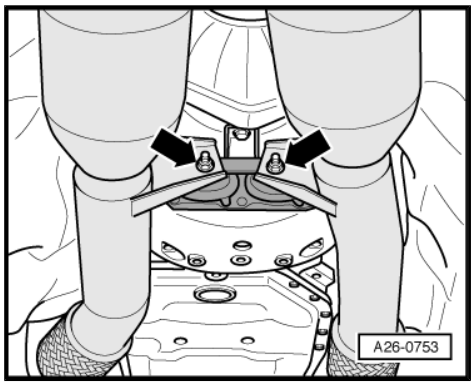

– Support tunnel cross member using engine and gearbox jack - V.A.G 1383 A- .
– Remove bolts -arrows- at tunnel cross member.

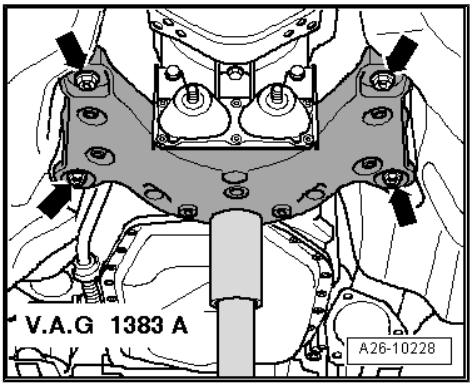

– First remove bolts -2- and -3- and then subframe bolts -1- and -4-.
– Lower gearbox and subframe slowly using engine and gearbox jack - V.A.G 1383 A- .

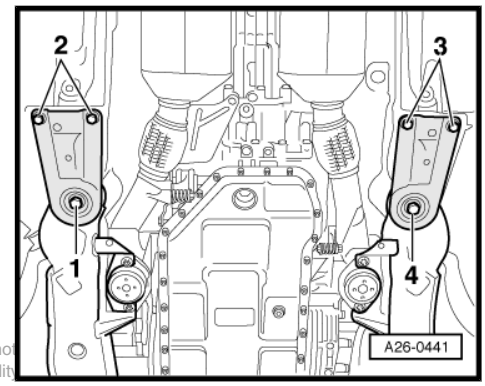

Note

Propshaft must be kept straight.

Protected by copyright. Copying for private or commercial purposes, in part or in whole, is not permitted unless authorised by AUDI AG. AUDI AG does not guarantee or accept any liability with respect to the correctness of information in this document. Copyright by AUDI AG.

– Unplug electrical connector -3- at temperature sender before particulate filter - G506- .

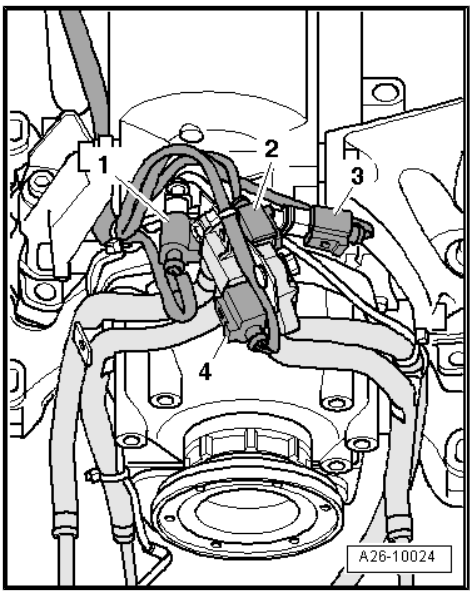

– Unscrew temperature sender before particulate filter - G506- -item 3- from particulate filter/main catalytic converter (left-side).

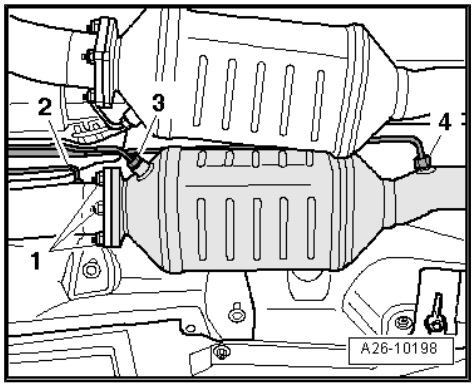

Note

Ignore items marked -1-, -2- and -4-.

Installing

Installation is carried out in the reverse order; note the following:

Note

Fit all cable ties in the original positions when installing.

– Note correct installation position of temperature sender before particulate filter - G506- :

• Angle -α- = 44°

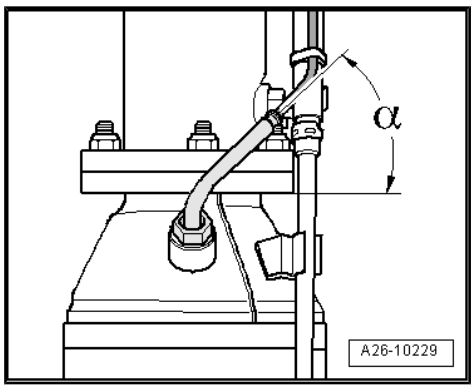

– Align exhaust system so it is free of stress ⇒ page 313 .

– Install subframe ⇒ Rep. gr. 40 .

Tightening torques

Component	Nm
Temperature sender before particulate filter - G506- to starter catalytic converter	45 [1)]
Exhaust pipe to centre bracket	25
Tunnel cross member to body	40
• [1)] Coat thread with high-temperature paste; for high-temperature paste refer to ⇒ Electronic parts catalogue .	

1.9 Separating Y-pipe and rear silencers

♦ The connecting pipe can be cut through at the point marked in order to renew the Y-pipe and rear silencers separately.

♦ The cutting point is marked by an indentation on the outside of the exhaust pipe.

Special tools and workshop equipment required

♦ Chain pipe cutter - VAS 6254-

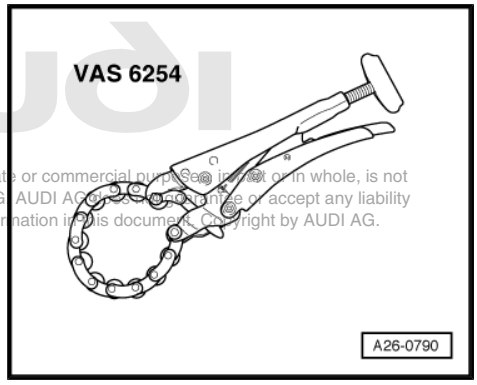

Protected by copyright. Copying for private or commercial purposes, in part or in whole, is not permitted unless authorised by AUDI AG. AUDI AG does not guarantee or accept any liability with respect to the correctness of information in this document. Copyright by AUDI AG.

Procedure

– Cut through relevant exhaust pipe at a right angle at cutting point -arrows- using chain pipe cutter - VAS 6254- .

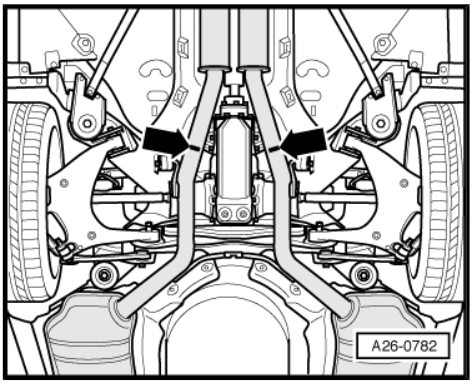

– When reassembling, position the relevant clamp -arrows- centrally over the cutting point.

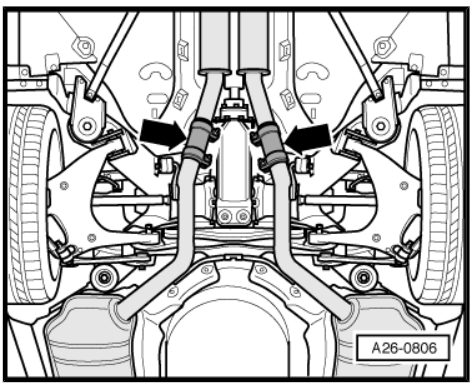

– Fit clamps so that ends of bolts do not protrude beyond bottom of clamps.

• Bolt connections face one another.

– Align exhaust system so it is free of stress ⇒ page 313 .

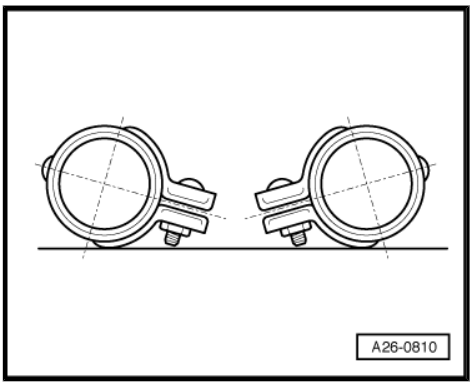

1.10 Removing and installing starter catalytic converter (left-side)

Removing

Note

All cable ties which are released or cut open when removing must be fitted in the same position when installing.

– Lower subframe for repair and assembly work ⇒ page 52 .

Protected by copyright. Copying for private or commercial purposes, in part or in whole, is not permitted unless authorised by AUDI AG. AUDI AG does not guarantee or accept any liability with respect to the correctness of information in this document. Copyright by AUDI AG.

– Unbolt cross piece (front) -arrows-.

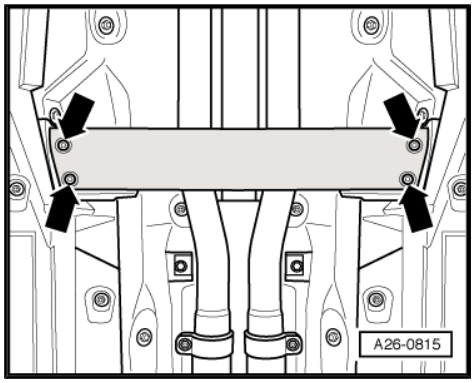

– Loosen clamps -1- and -2-.

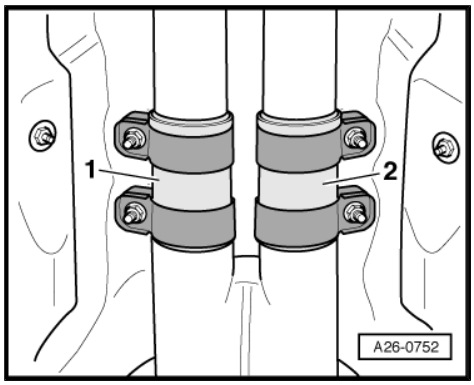

– Loosen union nut -1- and unclip pressure pipe at particulate filter/main catalytic converter (left-side).
– Loosen union nut -3- and detach pressure pipe at exhaust pipe.
– Unscrew temperature sender 2 before particulate filter - G498- -item 2- from particulate filter/main catalytic converter (left-side).

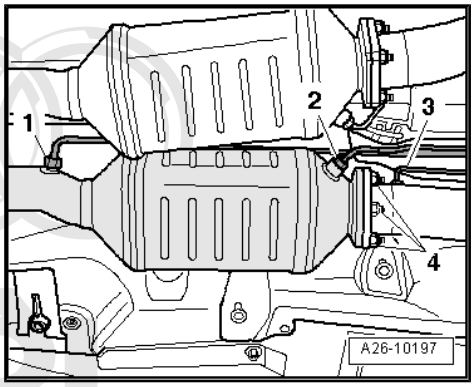

Note

Disregard -item 4-.

Copyright by AUDI AG. Any use for commercial purposes, in part or in whole, is not permitted without the consent of AUDI AG. AUDI AG does not guarantee or accept any liability with respect to the correctness of information in this document. Copyright by AUDI AG.

– Loosen union nut -4- and unclip pressure pipe at particulate filter/main catalytic converter (right-side).
– Loosen union nut -2- and detach pressure pipe at exhaust pipe.
– Unscrew temperature sender before particulate filter - G506- -item 3- from particulate filter/main catalytic converter (right-side).

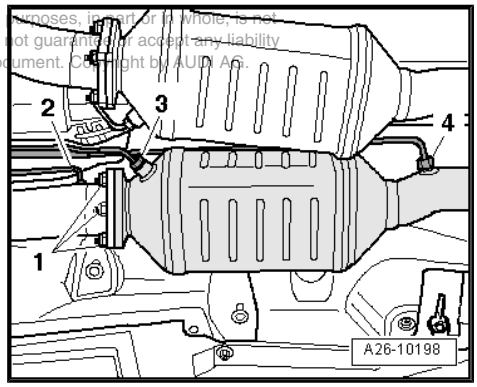

Note

Disregard -item 1-.

– Remove nuts on left and right -arrows- at centre bracket for exhaust pipes.

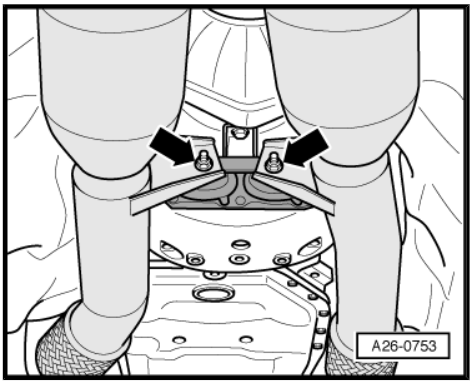

– Unbolt exhaust pipe (left-side) from starter catalytic converter -arrows-.
– Detach particulate filter/main catalytic converter (left side) with exhaust pipe.

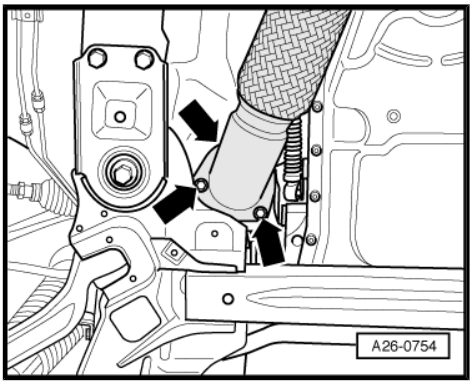

– Unbolt exhaust pipe (right-side) from starter catalytic converter -arrows-.
– Detach particulate filter/main catalytic converter (right side) with exhaust pipe.

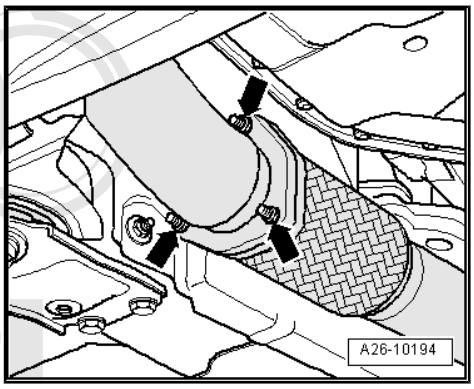

– Remove bolts -arrows- at tunnel cross member.

Unauthorised copying for private or commercial purposes, in part or in whole, is not permitted unless authorised by AUDI AG. AUDI AG does not guarantee or accept any liability with respect to the correctness of information in this document. Copyright by AUDI AG.

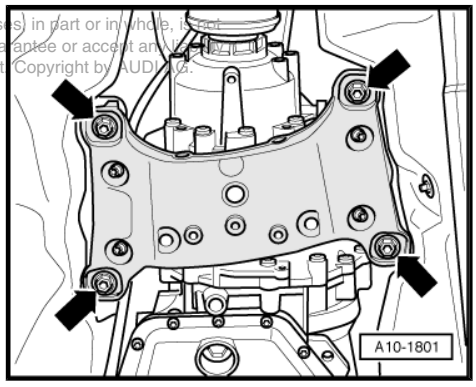

– Remove bolt -arrow- on mounting for torque reaction support.

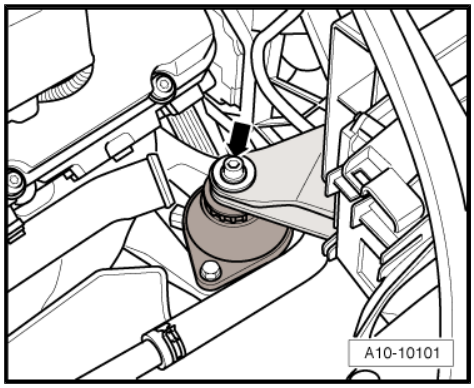

– Lower engine/gearbox assembly via spindles of support bracket - 10 - 222 A- until air pipe (right-side) makes contact with radiator cowl.

– Move electrical wire of Lambda probe 2 - G108- (located in starter catalytic converter (left-side)) clear.

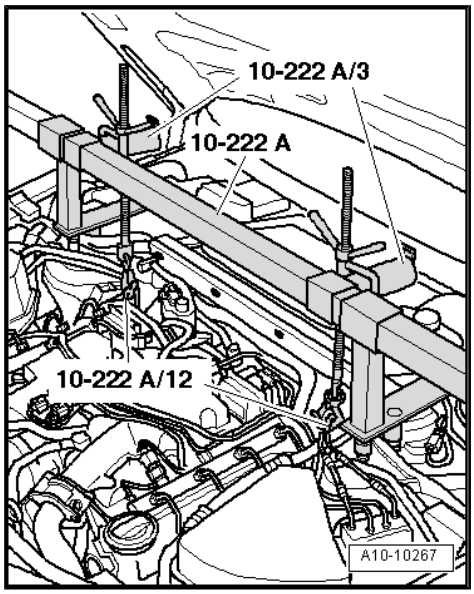

– Remove noise insulation in left-side wheel housing -arrows-.

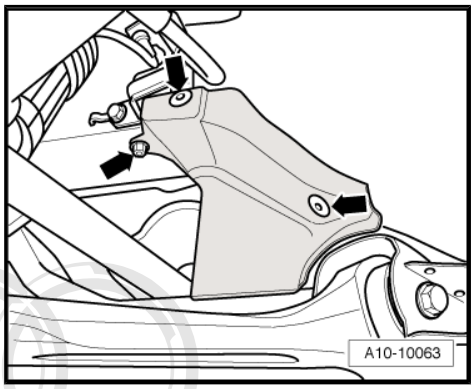

– Unbolt heat shield above drive shaft (left-side) from gearbox -arrows-.

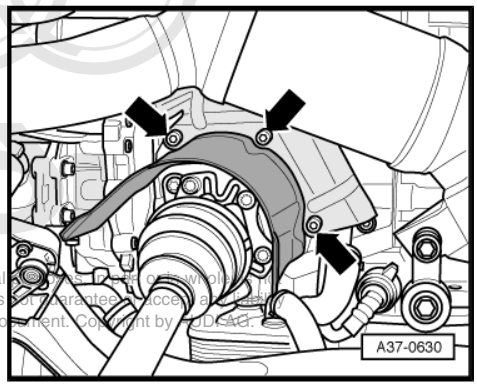

Protected by copyright. Copying for private or commercial purposes, in part or in whole, is not permitted unless authorised by AUDI AG. AUDI AG does not guarantee or accept any liability with respect to the correctness of information in this document. Copyright by AUDI AG.

– Unbolt bracket for starter catalytic converter (left-side) -arrows-.

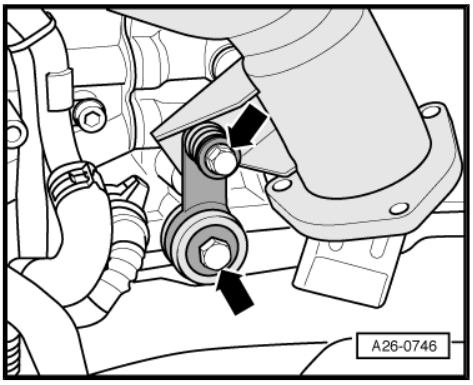

– Unscrew nuts -arrows- at starter catalytic converter (left-side)/ turbocharger.

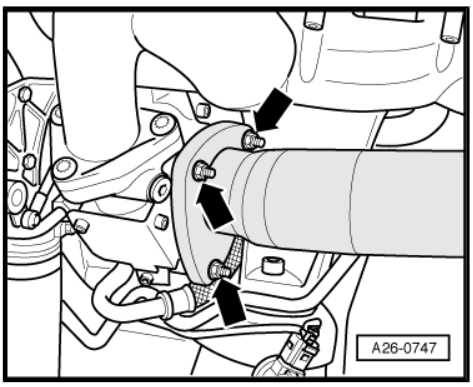

Protected by copyright. Copying for private or commercial purposes, in part or in whole, is not permitted unless authorised by AUDI AG. AUDI AG does not guarantee or accept any liability with respect to the correctness of information in this document. Copyright by AUDI AG.

– Pivot starter catalytic converter and unscrew exhaust gas temperature sender 2, bank 2 - G449- -item 1-.

– Detach electrical connector for Lambda probe 2 - G108- -item 2- from bracket and unplug.

– Move electrical wire clear and remove starter catalytic converter (left-side).

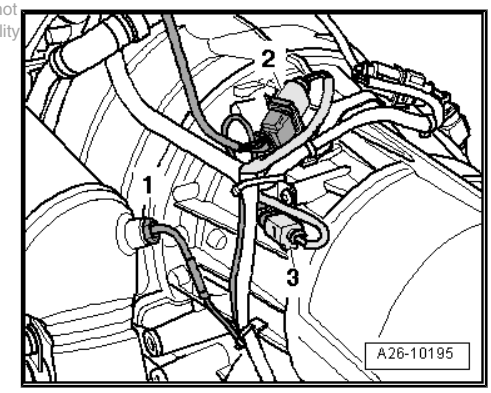

Installing

Installation is carried out in the reverse order; note the following:

Note

- *Renew self-locking nuts.*
- *Fit all cable ties in the original positions when installing.*

– Note installation position of mounting components (left-side):

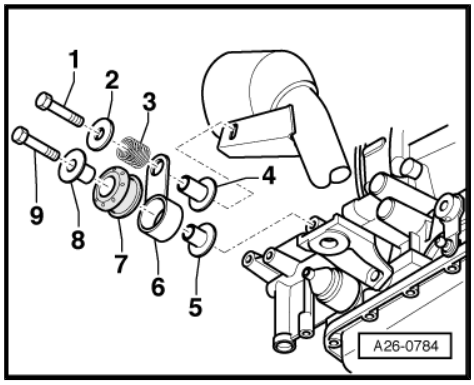

1 - Bolt, 25 Nm

2 - Washer

3 - Compression spring

4 - Spacer sleeve

5 - Spacer sleeve

6 - Bracket

7 - Buffer

8 - Spacer sleeve

9 - Bolt, 25 Nm

– Install subframe ⇒ Rep. gr. 40 .

– Tighten subframe bolts only to specified torque (do not turn further). Do not tighten bolts to final setting until after wheel alignment check has been performed ⇒ Rep. gr. 40 .

> ⚠ **WARNING**
>
> *The vehicle must not be driven at this stage.*

– Install anti-roll bar ⇒ Rep. gr. 40 .

– Install particulate filter/main catalytic converter: left-side ⇒ page 309 , right-side ⇒ page 310 .

– Install exhaust pipe: left-side ⇒ page 306 , right-side ⇒ page 307 .

– Align exhaust system so it is free of stress ⇒ page 313 .

– Install mounting for torque reaction support ⇒ page 48 .

– Install engine cross member ⇒ page 46 .

– Perform wheel alignment check ⇒ Rep. gr. 44 .

Protected by copyright. Copying for private or commercial purposes, in part or in whole, is not permitted unless authorised by AUDI AG. AUDI AG does not guarantee or accept any liability with respect to the correctness of information in this document. Copyright by AUDI AG.

> ⚠ **WARNING**
>
> *Tighten bolts for subframe to final setting after performing wheel alignment check.*

Tightening torques

Component	Nm
Starter catalytic converter to turbocharger	25 [1)]
Starter catalytic converter to mounting bracket	25
Mounting plate to gearbox	25
Heat shield to gearbox	23
Tunnel cross member to body	40

• [1)] Renew nuts.

1.11 Removing and installing starter catalytic converter (right-side)

Removing

Note

All cable ties which are released or cut open when removing must be fitted in the same position when installing.

– Lower subframe for repair and assembly work ⇒ page 52 .

– Unbolt cross piece (front) -arrows-.

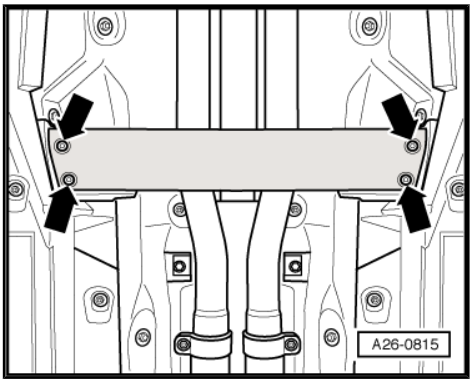

– Loosen clamps -1- and -2-.

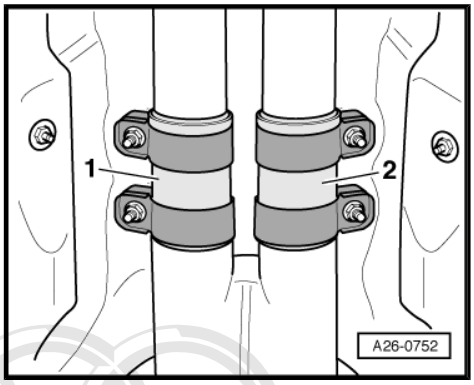

– Loosen union nut -1- and unclip pressure pipe at particulate filter/main catalytic converter (left-side).

– Loosen union nut -3- and detach pressure pipe at exhaust pipe.

– Unscrew temperature sender 2 before particulate filter - G498- -item 2- from particulate filter/main catalytic converter (left-side).

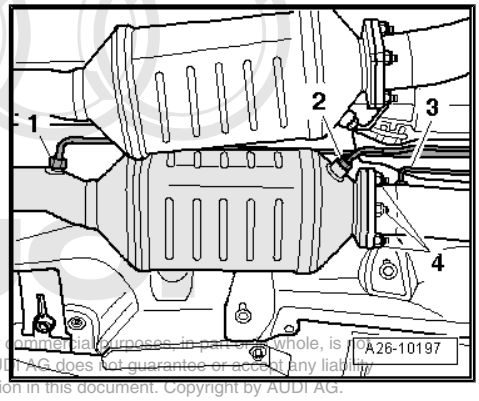

Note

Disregard -item 4-.

Protected by copyright. Copying for private or commercial purposes, in part or in whole, is not permitted unless authorised by AUDI AG. AUDI AG does not guarantee or accept any liability with respect to the correctness of information in this document. Copyright by AUDI AG.

– Loosen union nut -4- and unclip pressure pipe at particulate filter/main catalytic converter (right-side).
– Loosen union nut -2- and detach pressure pipe at exhaust pipe.
– Unscrew temperature sender before particulate filter - G506- -item 3- from particulate filter/main catalytic converter (right-side).

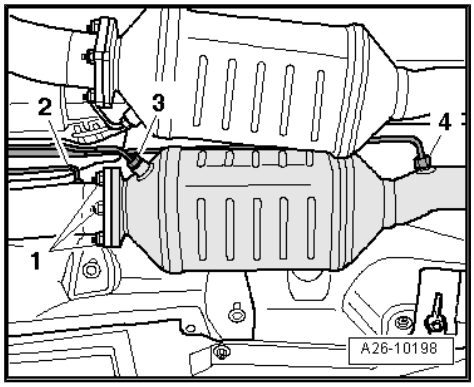

Note

Disregard -item 1-.

– Remove nuts on left and right -arrows- at centre bracket for exhaust pipes.

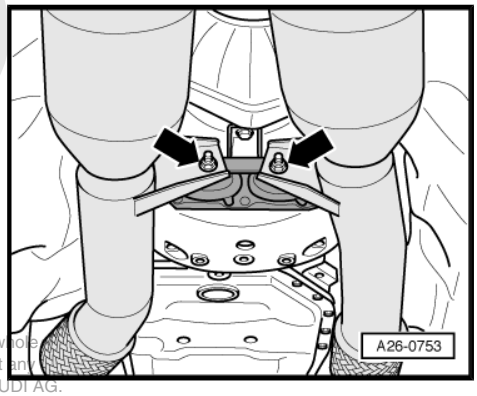

Protected by copyright. Copying for private or commercial purposes, in part or in whole, is not permitted unless authorised by AUDI AG. AUDI AG does not guarantee or accept any liability with respect to the correctness of information in this document. Copyright by AUDI AG.

– Unbolt exhaust pipe (left-side) from starter catalytic converter -arrows-.
– Detach particulate filter/main catalytic converter (left side) with exhaust pipe.

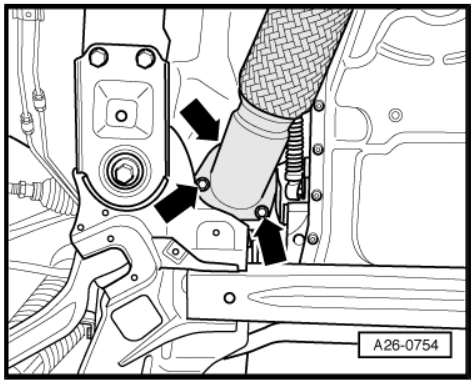

– Unbolt exhaust pipe (right-side) from starter catalytic converter -arrows-.
– Detach particulate filter/main catalytic converter (right side) with exhaust pipe.

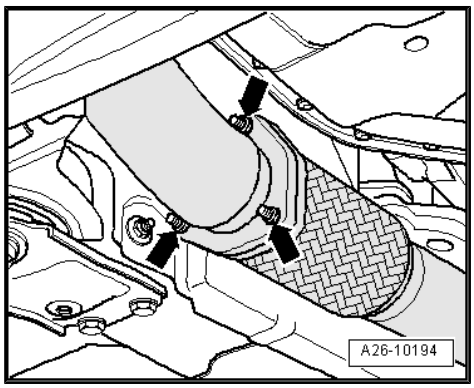

– Remove bolts -arrows- at tunnel cross member.

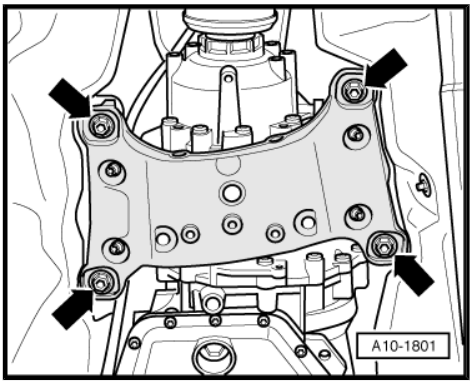

– Remove bolt -arrow- on mounting for torque reaction support.

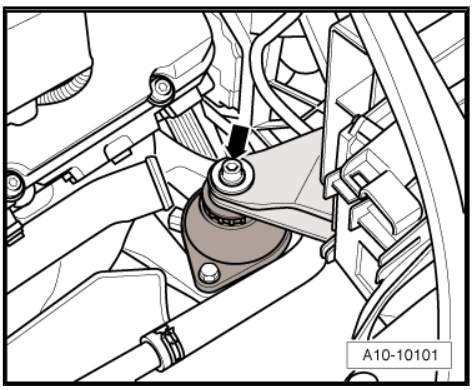

– Lower engine/gearbox assembly via spindles of support bracket - 10 - 222 A- until air pipe (right-side) makes contact with radiator cowl.

– Move electrical wire of Lambda probe - G39- (located in starter catalytic converter (right-side)) clear.

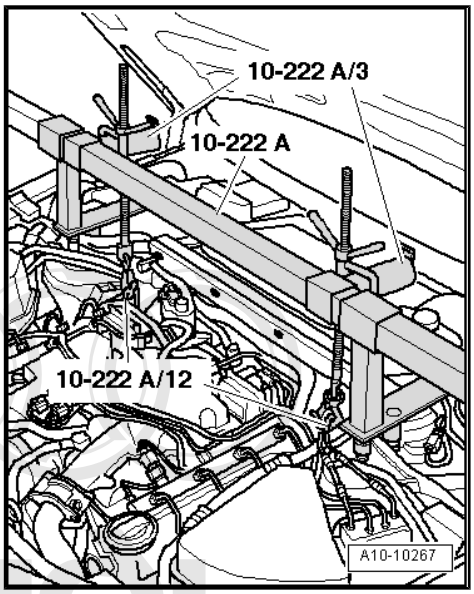

– Remove noise insulation in right-side wheel housing -arrows-.

Protected by copyright. Copying for private or commercial purposes, in part or in whole, is not permitted unless authorised by AUDI AG. AUDI AG does not guarantee or accept any liability with respect to the correctness of information in this document. Copyright by AUDI AG.

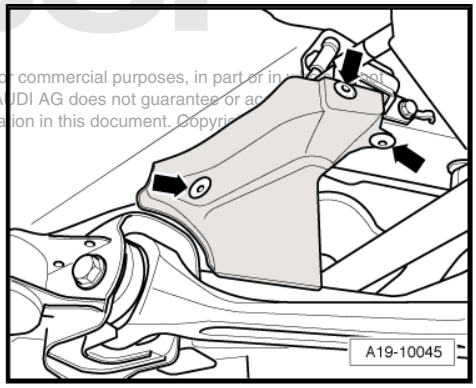

– Unbolt heat shield above drive shaft (right-side) from gearbox -arrows-.

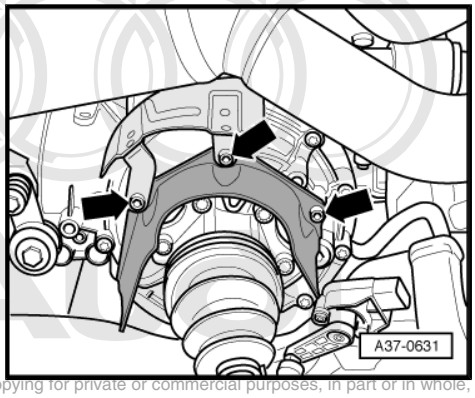

Protected by copyright. Copying for private or commercial purposes, in part or in whole, is not permitted unless authorised by AUDI AG. AUDI AG does not guarantee or assume any liability with respect to the correctness of information. © AUDI AG.

– Unbolt bracket for starter catalytic converter (right-side) -arrows-.

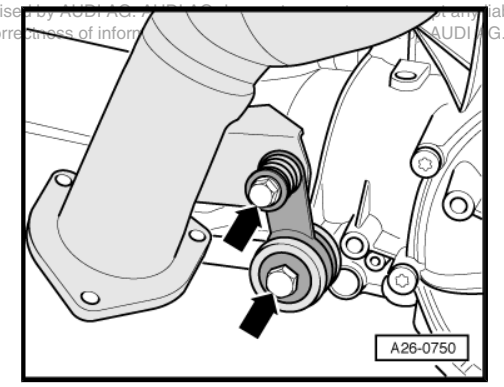

– Unscrew nuts -arrows- securing starter catalytic converter (right-side) to turbocharger.

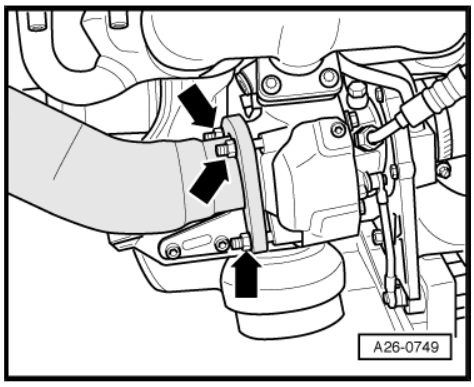

– Pivot starter catalytic converter and unscrew exhaust gas temperature sender 2 - G448- -item 3-.
– Detach electrical connector for Lambda probe - G39- -item 2- from retainer and unplug.
– Move electrical wire clear and remove starter catalytic converter (right-side).

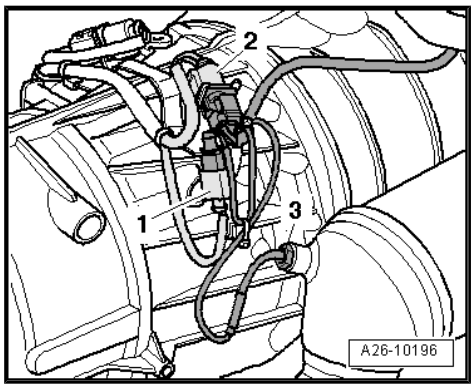

Installing

Installation is carried out in the reverse order; note the following:

Note

- *Renew self-locking nuts.*
- *Fit all cable ties in the original positions when installing.*

– Note installation position of mounting components (right-side):

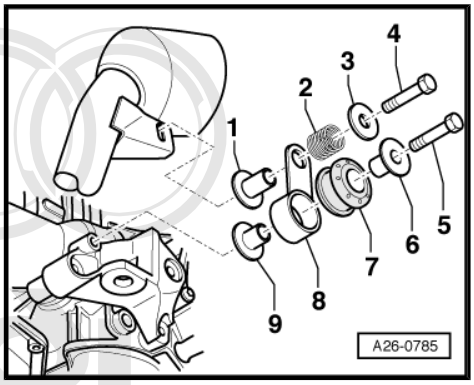

1 - Bolt, 25 Nm
2 - Washer
3 - Compression spring
4 - Spacer sleeve
5 - Spacer sleeve
6 - Bracket
7 - Buffer
8 - Spacer sleeve
9 - Bolt, 25 Nm

Protected by copyright. Copying for private or commercial purposes, in part or in whole, is not permitted unless authorised by AUDI AG. AUDI AG does not guarantee or accept any liability with respect to the correctness of information in this document. Copyright by AUDI AG.

– Install subframe ⇒ Rep. gr. 40 .
– Tighten subframe bolts only to specified torque (do not turn further). Do not tighten bolts to final setting until after wheel alignment check has been performed ⇒ Rep. gr. 40 .

> **WARNING**
>
> *The vehicle must not be driven at this stage.*

– Install anti-roll bar ⇒ Rep. gr. 40 .
– Install particulate filter/main catalytic converter: left-side ⇒ page 309 , right-side ⇒ page 310 .
– Install exhaust pipe: left-side ⇒ page 306 , right-side ⇒ page 307 .
– Align exhaust system so it is free of stress ⇒ page 313 .
– Install mounting for torque reaction support ⇒ page 48 .
– Install engine cross member ⇒ page 46 .
– Perform wheel alignment check ⇒ Rep. gr. 44 .

> **WARNING**
>
> *Tighten bolts for subframe to final setting after performing wheel alignment check.*

Tightening torques

Component	Nm
Starter catalytic converter to turbocharger	25 [1)]
Starter catalytic converter to mounting bracket	25
Mounting plate to gearbox	25
Heat shield to gearbox	23
Tunnel cross member to body	40
Engine cross member to longitudinal member	68
Mounting for torque reaction support to bracket for torque reaction support	40
• [1)] Renew nuts.	

1.12 Removing and installing exhaust pipe (left-side)

Removing

– Release fasteners -1-, -2- and -4- and take off rear noise insulation panel.

Protected by copyright. Copying for private or commercial purposes, in part or in whole, is not permitted unless authorised by AUDI AG. AUDI AG does not guarantee or accept any liability with respect to the correctness of information in this document. Copyright by AUDI AG.

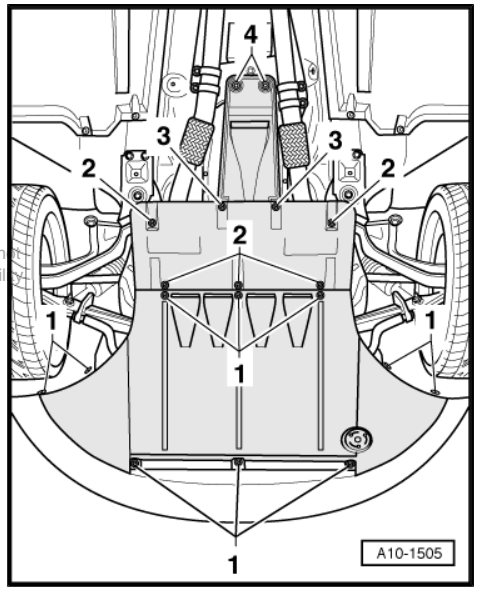

– Loosen clamp (left-side) -1-.

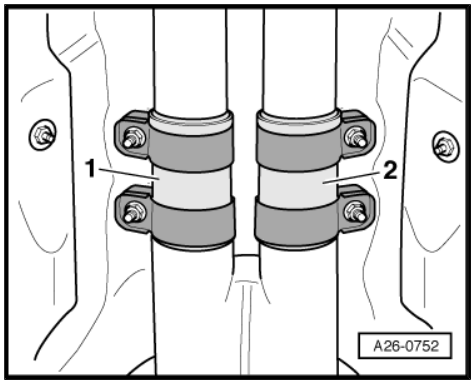

– Unscrew pressure pipe -4-.
– Unscrew nuts -1 ... 3- and -5-.

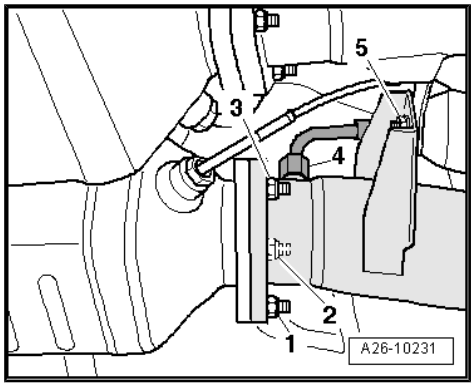

– Unbolt exhaust pipe (left-side) from starter catalytic converter -arrows-.

– Remove exhaust pipe (left-side) (press stud of centre bracket for exhaust system to front).

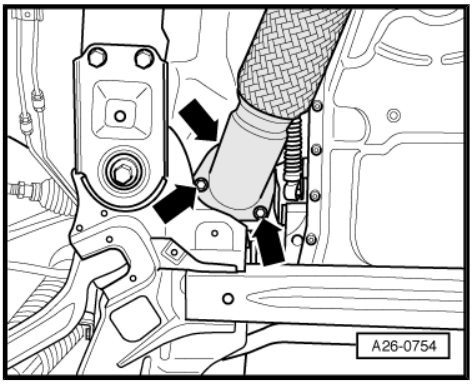

Installing

Installation is carried out in the reverse order; note the following:

Note

Renew gaskets and self-locking nuts.

– Align exhaust system so it is free of stress ⇒ page 313 .

Tightening torques

Component	Nm
Exhaust pipe to front exhaust pipe	25 1)
Exhaust pipe to particulate filter/main catalytic converter	25 1)
Exhaust pipe to centre bracket	25
Pressure pipe	30
• 1) Renew nuts.	

1.13 Removing and installing exhaust pipe (right-side)

Removing

– Release fasteners -1-, -2- and -4- and take off rear noise insulation panel.

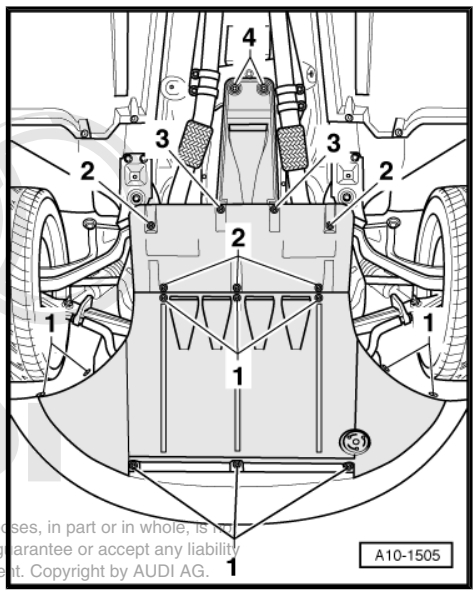

Protected by copyright. Copying for private or commercial purposes, in part or in whole, is not permitted unless authorised by AUDI AG. AUDI AG does not guarantee or accept any liability with respect to the correctness of information in this document. Copyright by AUDI AG.

– Loosen clamp (right-side) -2-.

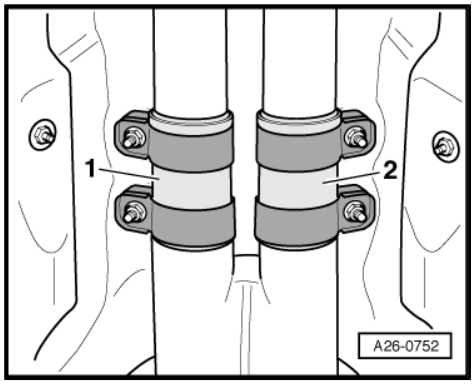

– Unscrew pressure pipe -4-.
– Unscrew nuts -1 ... 3- and -5-.

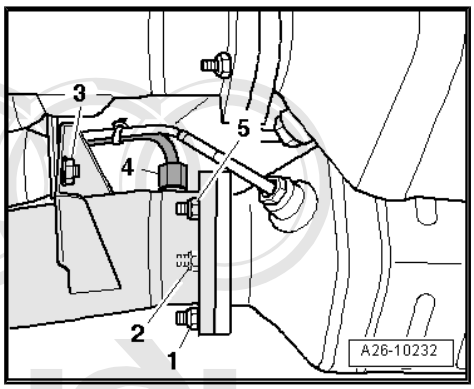

– Unbolt exhaust pipe (right-side) from starter catalytic converter -arrows-.
– Remove exhaust pipe (right-side) (press stud of left bracket for exhaust system to front).

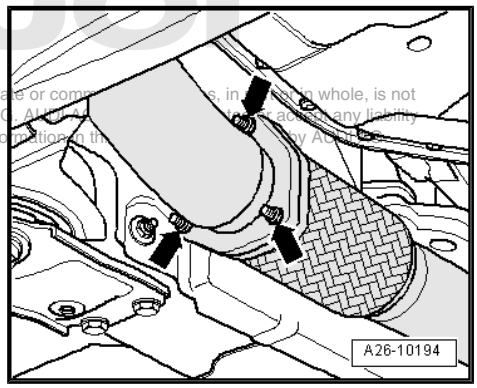

Copyright by AUDI AG. Reproduction for private or commercial purposes, in whole or in part, is not permitted unless authorised by AUDI AG. AUDI AG does not accept any liability with respect to the correctness of information in this copy.

Installing

Installation is carried out in the reverse order; note the following:

Note

Renew gaskets and self-locking nuts.

– Align exhaust system so it is free of stress ⇒ page 313 .

Tightening torques

Component	Nm
Exhaust pipe to front exhaust pipe	25 1)
Exhaust pipe to particulate filter/main catalytic converter	25 1)
Exhaust pipe to centre bracket	25
Pressure pipe	30
• 1) Renew nuts.	

1.14 Removing and installing particulate filter/main catalytic converter (left-side)

Removing

– Loosen clamp (left-side) -1-.

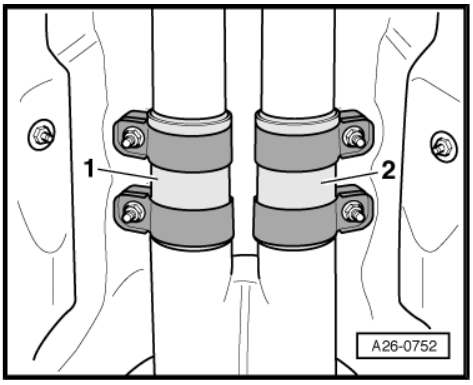

– Loosen union nut -1- and unclip pressure pipe at particulate filter/main catalytic converter (left-side).

– Loosen union nut -3- and detach pressure pipe at exhaust pipe.

– Unscrew temperature sender 2 before particulate filter - G498- -item 2- from particulate filter/main catalytic converter (left-side).

– Remove nuts -4- and take out particulate filter/main catalytic converter (left-side).

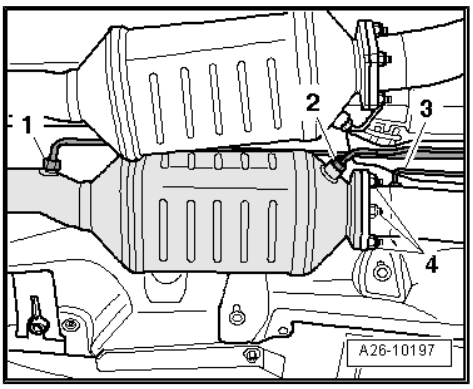

Installing

Installation is carried out in the reverse order; note the following:

Note

Renew gaskets and self-locking nuts.

– Install temperature sender 2 before particulate filter - G498- ⇒ page 288 .

– Align exhaust system so it is free of stress ⇒ page 313 .

– After renewing particulate filter, perform adaption in “Guided Functions” ⇒ Vehicle diagnostic tester

Tightening torques

Component	Nm
Particulate filter/main catalytic converter to exhaust pipe	25 [1)]
Pressure pipe	30
• [1)] Renew nuts.	

Protected by copyright. Copying for private or commercial purposes, in part or in whole, is not permitted unless authorised by AUDI AG. AUDI AG does not guarantee or accept any liability with respect to the correctness of information in this document. Copyright by AUDI AG.

1.15 Removing and installing particulate filter/main catalytic converter (right-side)

Removing

– Loosen clamp (right-side) -2-.

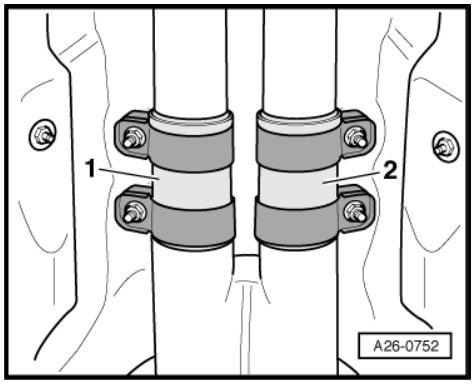

– Loosen union nut -4- and unclip pressure pipe at particulate filter/main catalytic converter (left-side).

– Loosen union nut -2- and detach pressure pipe at exhaust pipe.

– Unscrew temperature sender before particulate filter - G506- -item 3- from particulate filter/main catalytic converter (left-side).

– Remove nuts -1- and take out particulate filter/main catalytic converter (right-side).

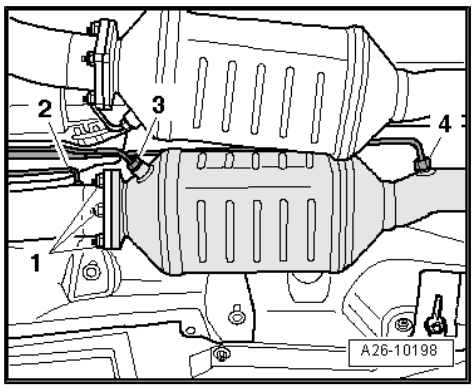

Installing

Installation is carried out in the reverse order; note the following:

Note

Renew gaskets and self-locking nuts.

– Install temperature sender before particulate filter - G506- ⇒ page 291 .

– Align exhaust system so it is free of stress ⇒ page 313 .

– After renewing particulate filter, perform adaption in “Guided Functions” ⇒ Vehicle diagnostic tester

Tightening torques

Component	Nm
Particulate filter/main catalytic converter to exhaust pipe	25 [1]
Pressure pipe	30
• [1] Renew nuts.	

Protected by copyright. Copying for private or commercial purposes, in part or in whole, is not permitted unless authorised by AUDI AG. AUDI AG does not guarantee or accept any liability with respect to the correctness of information in this document. Copyright by AUDI AG.

1.16 Exhaust manifold - exploded view

Note

The illustration shows the exhaust manifold for the left cylinder bank.

1 - Turbocharger

- ❑ Removing and installing: left-side ⇒ page 252 ; right-side ⇒ page 258

2 - Gasket

- ❑ Renew

3 - Exhaust manifold

- ❑ Removing and installing: left-side ⇒ page 312 ; right-side ⇒ page 312

4 - Cylinder head

5 - Gaskets

- ❑ Renew

6 - 25 Nm

- ❑ Renew
- ❑ Coat with high-temperature paste; for high-temperature paste refer to ⇒ Electronic parts catalogue

7 - 20 Nm + 1/4 turn (90°) further

- ❑ Renew
- ❑ Coat with high-temperature paste; for high-temperature paste refer to ⇒ Electronic parts catalogue

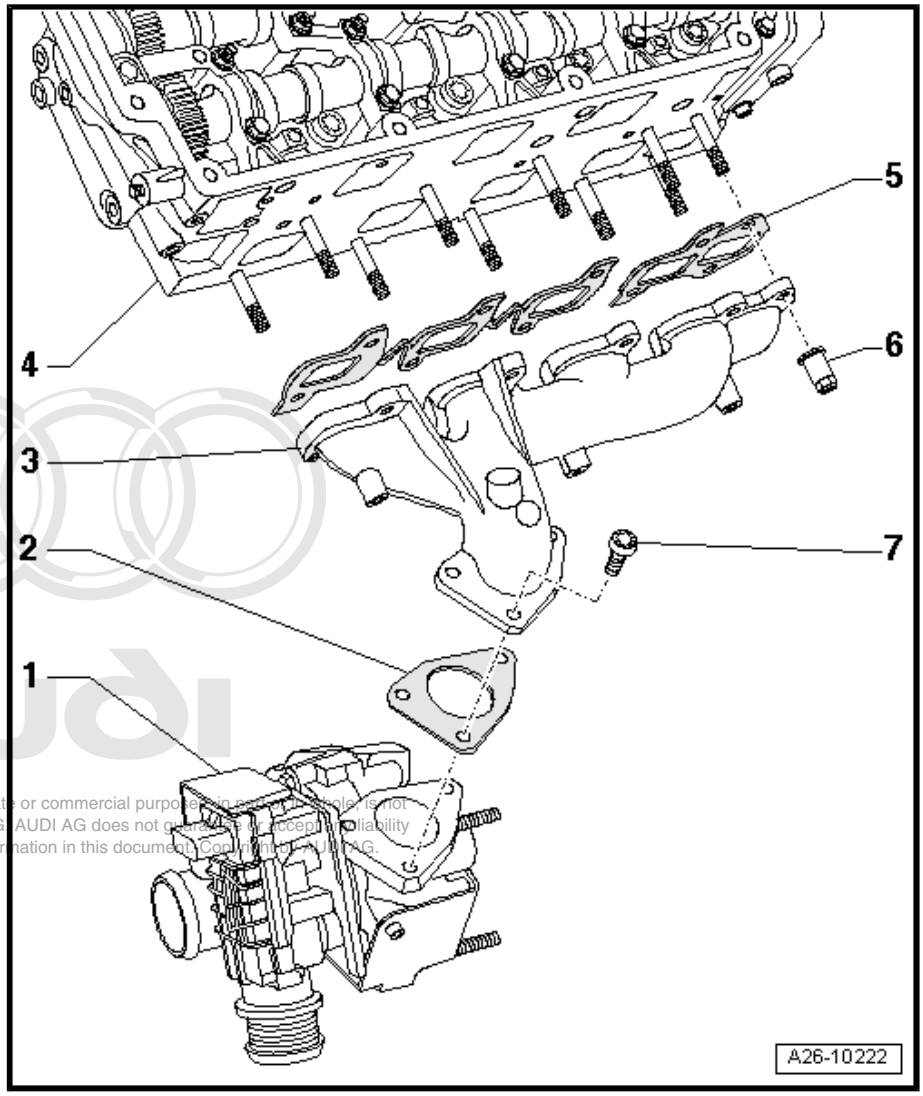

Protected by copyright. Copying for private or commercial purposes, in part or in whole, is not permitted unless authorised by AUDI AG. AUDI AG does not guarantee or accept any liability with respect to the correctness of information in this document. Copyright by AUDI AG.

1.17 Removing and installing exhaust manifold (left-side)

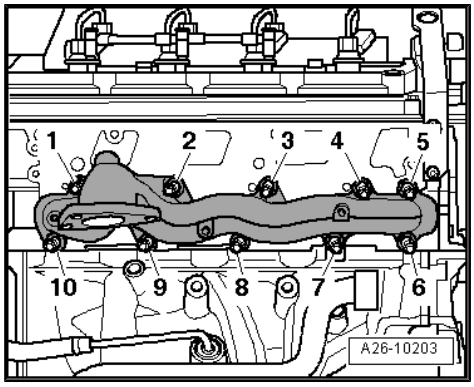

Removing

– Remove turbocharger (left-side) ⇒ page 252 .

– Unscrew nuts -1 ... 10-.

– Detach exhaust manifold.

Installing

Installation is carried out in the reverse order; note the following:

Note

Renew seals, gaskets and self-locking nuts.

– Install turbocharger (left-side) ⇒ page 252 .

Tightening torque

Component	Nm
Exhaust manifold to cylinder head	25 1)2)
• 1) Renew nuts. • 21) Coat with high-temperature paste; for high-temperature paste refer to ⇒ Electronic parts catalogue	

1.18 Removing and installing exhaust manifold (right-side)

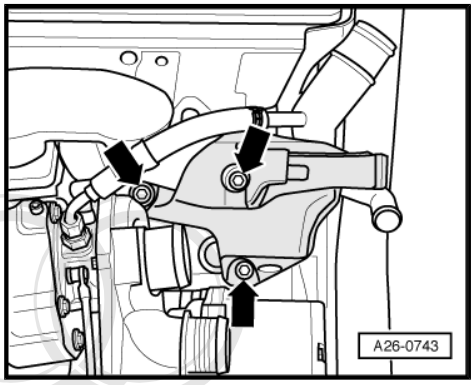

Removing

– Remove turbocharger (right-side) ⇒ page 258 .

– Remove torque reaction support -arrows-.

Protected by copyright. Copying for private or commercial purposes, in part or in whole, is not permitted unless authorised by AUDI AG. AUDI AG does not guarantee or accept any liability with respect to the correctness of information in this document. Copyright by AUDI AG.

– Unscrew nuts -1 ... 10-.
– Detach exhaust manifold.

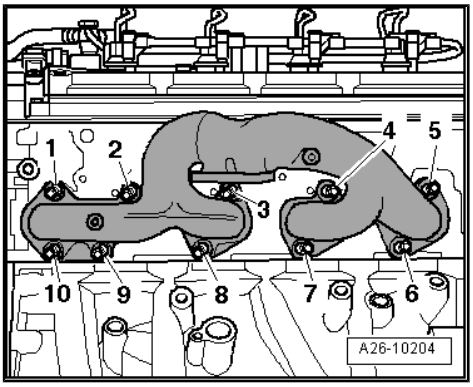

Installing

Installation is carried out in the reverse order; note the following:

Note

Renew seals, gaskets and self-locking nuts.

– Install turbocharger (right-side) ⇒ page 258 .

Tightening torques

Component	Nm
Exhaust manifold to cylinder head	25 1)2)
Torque reaction support to engine	42
• 1) Renew nuts. • 21) Coat with high-temperature paste; for high-temperature paste refer to ⇒ Electronic parts catalogue	

1.19 Stress-free alignment of exhaust system

Procedure

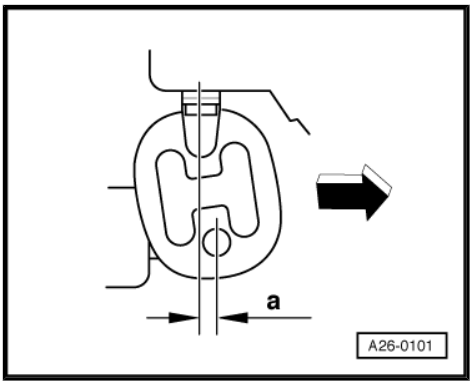

Note

The exhaust system must be aligned when it is cool.

– Loosen bolt connections of all exhaust system clamps.
– Press rear silencer to front -arrow- until the rubber mountings are pre-loaded to the specified dimensions:
• Rubber mounting (front): -a- = 11 mm.
• Rubber mounting (rear): -a- = 14 mm.
– Align rear silencer horizontally.

– Position clamps so that they align with centre of cutting locations.
– Align front clamps so that ends of bolts do not protrude beyond bottom of clamps.
– Tighten bolts on clamps evenly to 23 Nm.

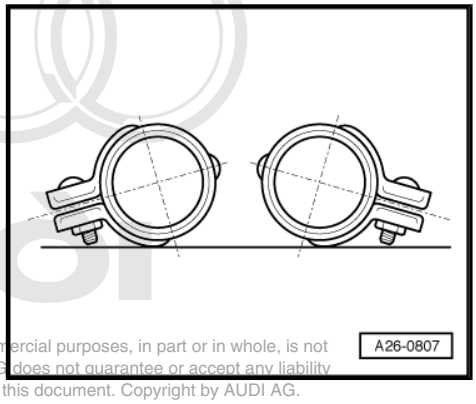

Protected by copyright. Copying for private or commercial purposes, in part or in whole, is not permitted unless authorised by AUDI AG. AUDI AG does not guarantee or accept any liability with respect to the correctness of information in this document. Copyright by AUDI AG.

– Align rear clamps so that ends of bolts do not protrude beyond bottom of clamps.
– Tighten bolts on clamps evenly to 23 Nm.

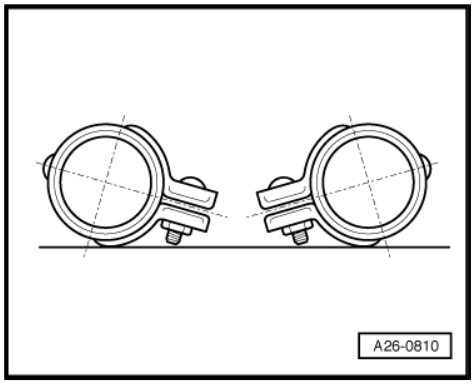

1.20 Aligning tailpipes

Procedure

– Check clearance between tailpipes and bumper on both sides:
• Dimension -x- (left-side) = dimension -x- (right-side); tolerance max. 2 mm.
– Check alignment angle of left and right-side tailpipes (sideways inclination):
• Angle -α- = 5°
– If necessary, correct angle -α- as follows:
– Loosen clamping bolt on tailpipe and turn tailpipe as required.
– Tighten clamping bolt to 30 Nm.

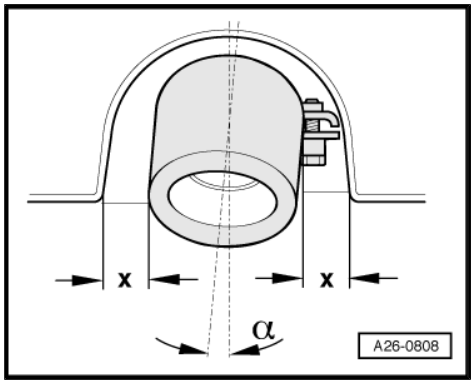

If necessary, correct dimension -x- as follows:
– Slacken nut -arrow- on brace between exhaust pipes.
– Adjust the distance between the rear silencers.
– Tighten nut to 23 Nm.

Protected by copyright. Copying for private or commercial purposes, in part or in whole, is not permitted unless authorised by AUDI AG. AUDI AG does not guarantee or accept any liability with respect to the correctness of information in this document. Copyright by AUDI AG.

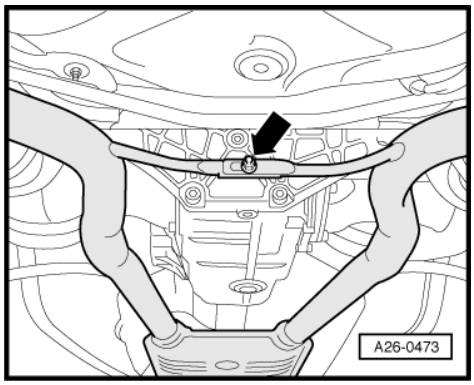

– Check distances -y- and -z- between tailpipes and bumper.
• Dimension -y- = 10 ... 14 mm.
• Dimension -z- = 13 ... 17 mm.

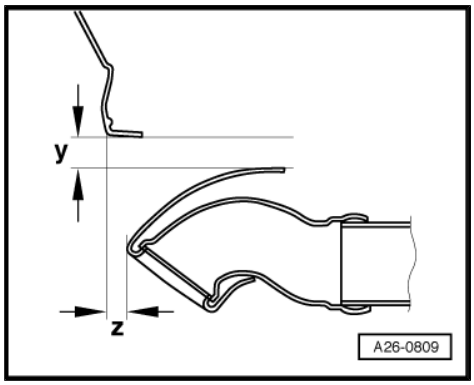

1.21 Checking exhaust system for leaks

– Start engine and run at idling speed.
– Plug tailpipes with cloth or plug, etc. while checking for leaks.

– Listen for leaks at joints between cylinder head/exhaust manifold, exhaust manifold/turbocharger, turbocharger/front exhaust pipe etc.
– Rectify any leaks that are found.

Protected by copyright. Copying for private or commercial purposes, in part or in whole, is not permitted unless authorised by AUDI AG. AUDI AG does not guarantee or accept any liability with respect to the correctness of information in this document. Copyright by AUDI AG.

2 Servicing exhaust gas recirculation system

⇒ “2.1 Exhaust gas recirculation on cylinder bank (left-side) - exploded view”, page 316

⇒ “2.2 Removing and installing exhaust gas recirculation control motor 2 V339 (left-side)”, page 317

⇒ “2.3 Exhaust gas recirculation on cylinder bank (right-side) - exploded view”, page 317

⇒ “2.4 Removing and installing control motor for exhaust gas recirculation V338 (right-side)”, page 319

⇒ “2.5 Exhaust gas recirculation cooler with change-over flap - exploded view”, page 319

⇒ “2.6 Removing and installing exhaust gas recirculation cooler with change-over flap”, page 320

⇒ “2.7 Removing and installing exhaust gas recirculation cooler”, page 323

2.1 Exhaust gas recirculation on cylinder bank (left-side) - exploded view

1 - Connecting pipe

2 - Gasket
- ❑ Renew

3 - Coolant hose

4 - Connection (left-side) for exhaust gas recirculation

5 - 9 Nm

6 - O-ring
- ❑ Renew

7 - Exhaust gas recirculation control motor - V339-
- ❑ Removing and installing ⇒ page 317

8 - 9 Nm

9 - 9 Nm

10 - Gasket
- ❑ Renew

11 - Coolant hose

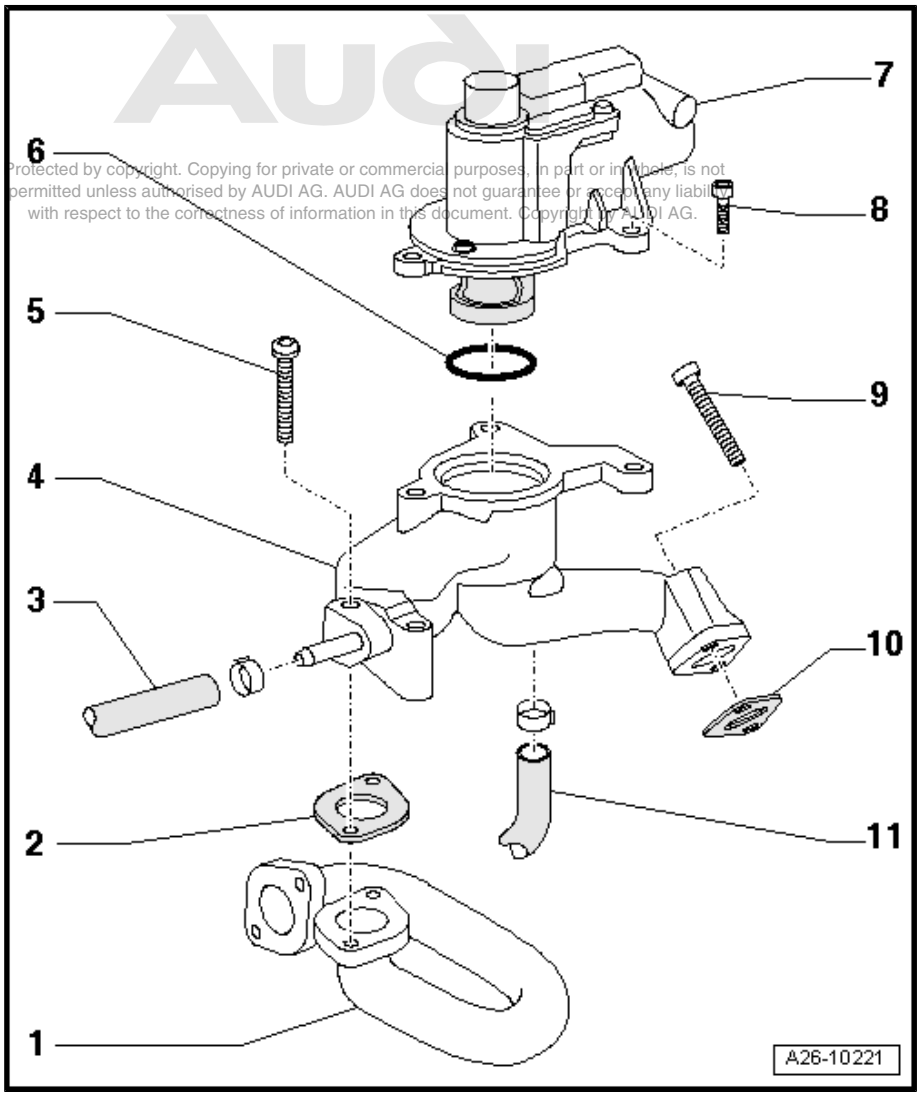

Protected by copyright. Copying for private or commercial purposes, in part or in whole, is not permitted unless authorised by AUDI AG. AUDI AG does not guarantee or accept any liability with respect to the correctness of information in this document. Copyright by AUDI AG.

2.2 Removing and installing exhaust gas recirculation control motor 2 - V339- (left-side)

Removing

– Carefully pull engine cover panel off four retaining pins one after the other -arrows-.

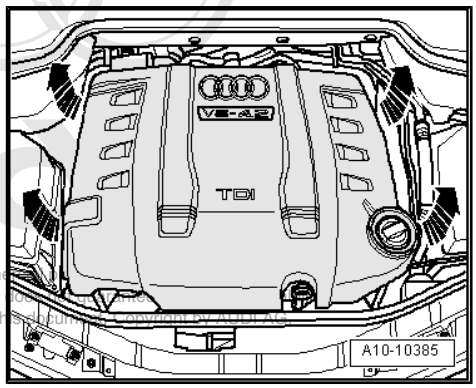

Protected by copyright. Copying for private or comme
permitted unless authorised by AUDI AG. AUDI AG
with respect to the correctness of information in th

– Unplug electrical connector -1-.

– Remove bolts -arrows- and take off control motor 2 for exhaust gas recirculation - V339- (left-side).

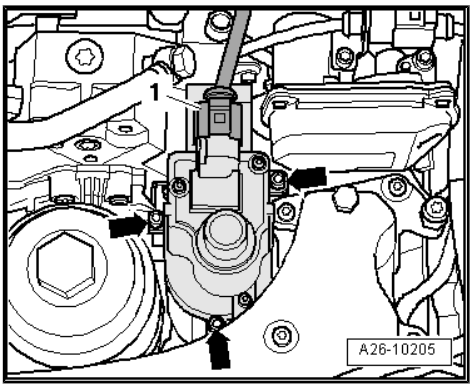

Installing

Installation is carried out in the reverse order; note the following:

Note

Renew O-rings.

Tightening torque

Component	Nm
Control motor 2 for exhaust gas recirculation - V339- to connection for exhaust gas recirculation (left-side)	9

2.3 Exhaust gas recirculation on cylinder bank (right-side) - exploded view

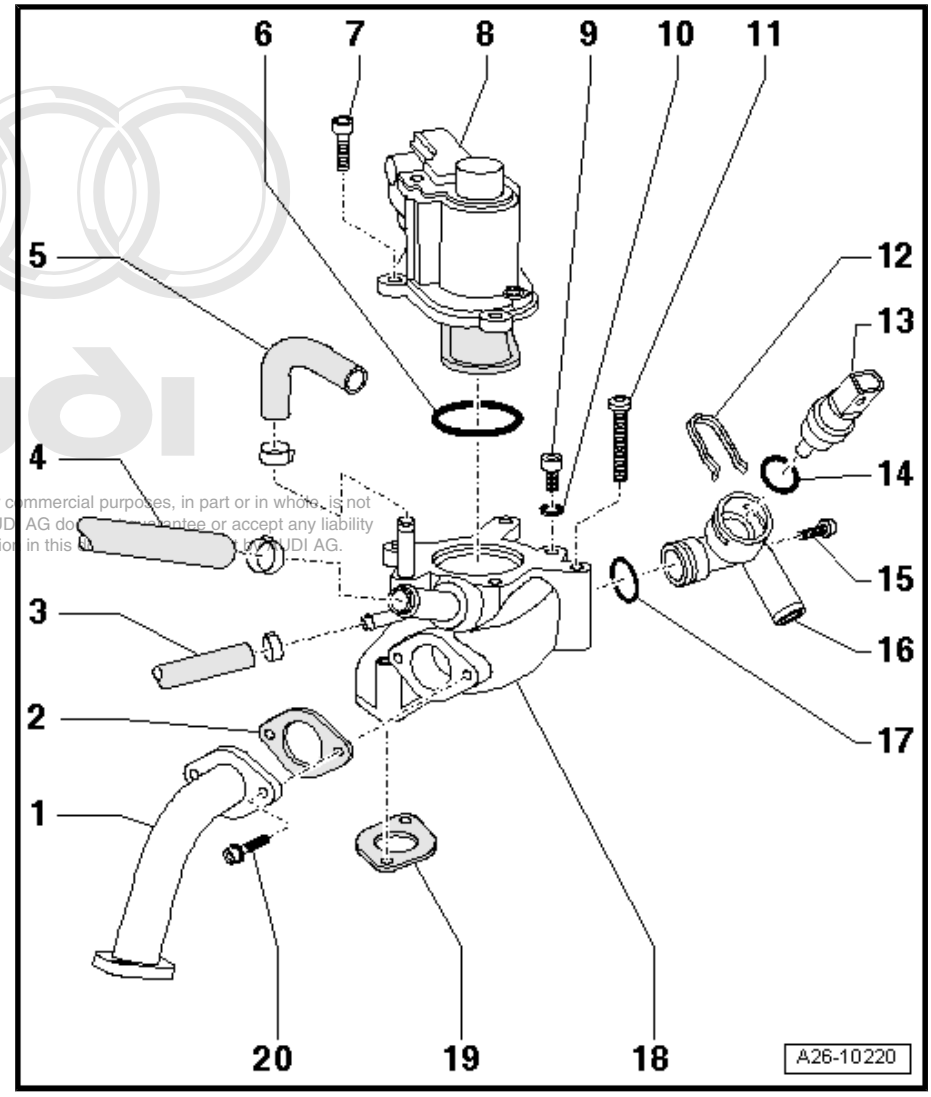

1 - Connecting pipe

2 - Gasket
- ❑ Renew

3 - Coolant hose

4 - Coolant hose

5 - Coolant hose

6 - O-ring
- ❑ Renew

7 - 9 Nm

8 - Exhaust gas recirculation control motor - V338-
- ❑ Removing and installing ⇒ page 319

Protected by copyright. Copying for private or commercial purposes, in part or in whole, is not permitted unless authorised by AUDI AG. AUDI AG does not guarantee or accept any liability with respect to the accuracy of information in this document. Copyright by AUDI AG.

9 - Bleeder screw, 9 Nm

10 - Seal
- ❑ Renew

11 - 8 Nm + $^1/_4$ turn (90°) further
- ❑ Renew

12 - Retaining clip
- ❑ For coolant temperature sender - G62-

13 - Coolant temperature sender - G62-
- ❑ Removing and installing ⇒ page 240

14 - O-ring
- ❑ Renew

15 - 9 Nm

16 - Coolant hose/pipe connection

17 - O-ring
- ❑ Renew

18 - Connection for exhaust gas recirculation (right-side)

19 - Gasket
- ❑ Renew

20 - 9 Nm

2.4 Removing and installing control motor for exhaust gas recirculation - V338- (right-side)

Removing

– Carefully pull engine cover panel off four retaining pins one after the other -arrows-.

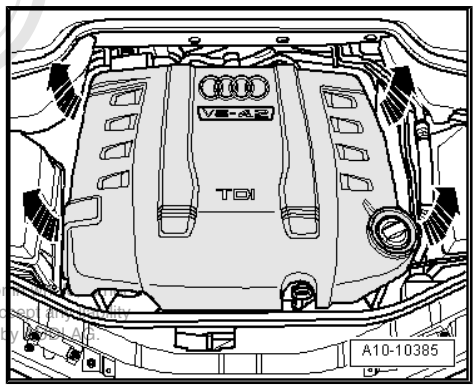

Protected by copyright. Copying for private or commercial purposes, in part or in whole, is not permitted unless authorised by AUDI AG. AUDI AG does not guarantee or accept any liability with respect to the correctness of information in this document. Copyright by AUDI AG.

– Unplug electrical connector -1-.

– Remove bolts -arrows- and take off control motor for exhaust gas recirculation - V338- (right-side).

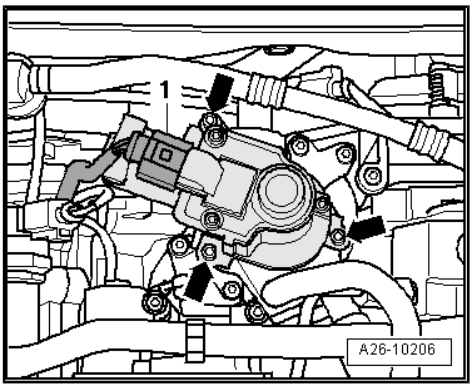

Installing

Installation is carried out in the reverse order; note the following:

Note

Renew O-rings.

Tightening torque

Component	Nm
Control motor for exhaust gas recirculation - V338- to connection for exhaust gas recirculation (right-side)	9

2.5 Exhaust gas recirculation cooler with change-over flap - exploded view

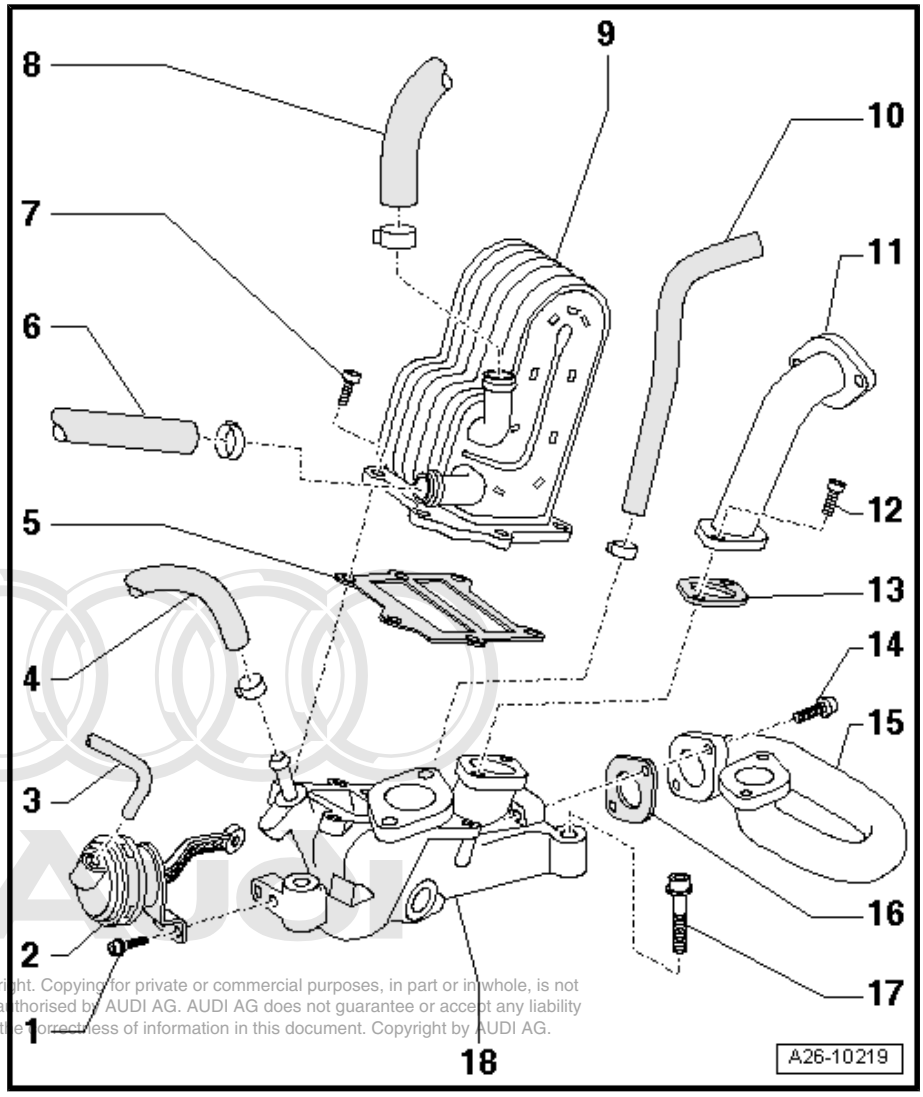

1 - 5 Nm

2 - Vacuum unit
- ❑ For exhaust gas recirculation change-over function

3 - Vacuum hose
- ❑ From exhaust gas recirculation cooler change-over valve - N345-

4 - Coolant hose

5 - Gasket
- ❑ Renew

6 - Coolant hose

7 - 8 Nm + 90° (1/4 turn) further
- ❑ Renew

8 - Coolant hose

9 - Exhaust gas recirculation cooler
- ❑ Removing and installing ⇒ page 320

10 - Coolant hose

11 - Connecting pipe

12 - 9 Nm

13 - Gasket
- ❑ Renew

14 - 9 Nm

15 - Connecting pipe

16 - Gasket
- ❑ Renew

17 - 22 Nm

18 - Change-over flap for exhaust gas recirculation cooler
- ❑ Removing and installing ⇒ “2.6 Removing and installing exhaust gas recirculation cooler with change-over flap”, page 320

Protected by copyright. Copying for private or commercial purposes, in part or in whole, is not permitted unless authorised by AUDI AG. AUDI AG does not guarantee or accept any liability with respect to the correctness of information in this document. Copyright by AUDI AG.

2.6 Removing and installing exhaust gas recirculation cooler with change-over flap

Removing

Note

Fit all heat insulation sleeves in the original position when installing.

– Drain off coolant ⇒ page 215 .

– Remove intake manifold (top section) ⇒ Rep. gr. 23 .

– Lower subframe for repair and assembly work ⇒ page 52 .

– Remove toothed belt for high-pressure pump ⇒ Rep. gr. 23 .
– Remove high-pressure pump ⇒ Rep. gr. 23 .
– Remove bolts -arrows- and detach bracket for high-pressure pump.

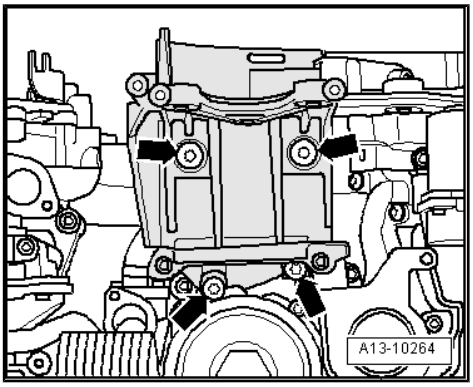

– Disconnect coolant hose from connections -1- and -2-.
– Loosen sealing cap -arrow- with 32 mm socket.
– Remove sealing cap together with oil filter element.
– Pull oil filter element off sealing cap.

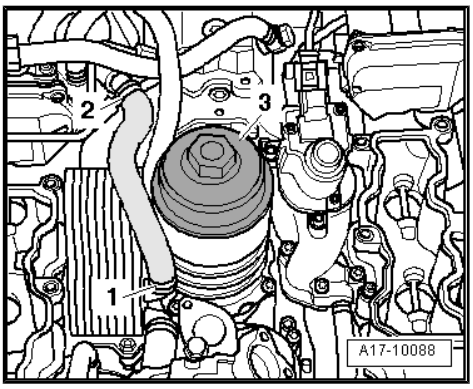

– Unbolt retaining clips -arrows-.
– Spread out rags round oil filter housing to catch escaping oil.
– Pull out oil filter housing.

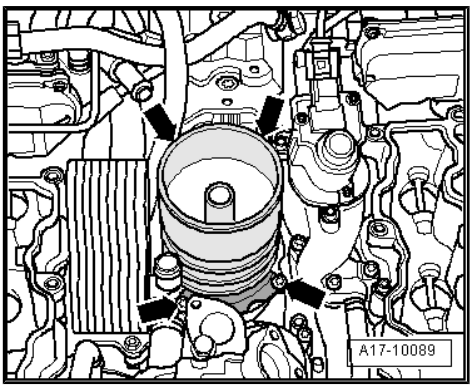

– Remove coolant hose from connection for exhaust gas recirculation (left-side) -arrows-.
– Remove bolts -1- and -2-.

Note

Disregard -item 3-.

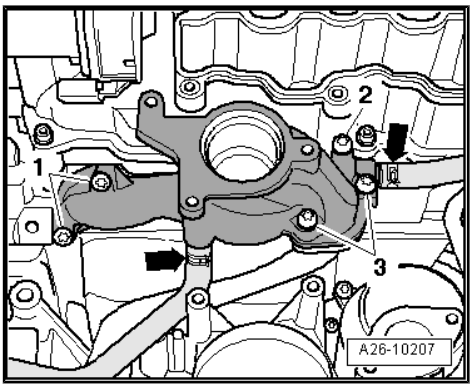

Protected by copyright. Copying for private or commercial purposes, in part or in whole, is not permitted unless authorised by AUDI AG. AUDI AG does not guarantee or accept any liability with respect to the correctness of information in this document. Copyright by AUDI AG.

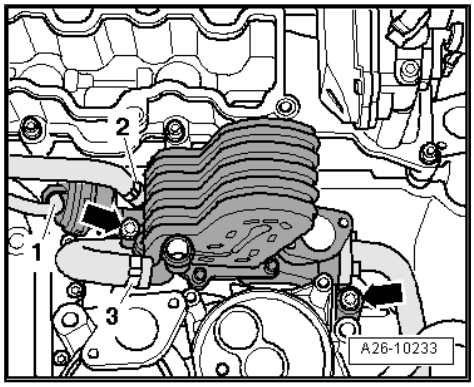

– Detach vacuum hose -1-.
– Detach coolant hoses -2- and -3-.
– Remove bolts -arrows- and take off exhaust gas recirculation cooler with change-over flap.

Installing

Installation is carried out in the reverse order; note the following:

Note

- *Renew seals and gaskets.*
- *Fit all heat insulation sleeves in the original position when installing.*
- *Secure all hose connections with the correct type of hose clips (same as original equipment) ⇒ Electronic parts catalogue .*

– Install oil filter housing ⇒ page 205 .
– Install high-pressure pump ⇒ Rep. gr. 23 .
– Install toothed belt for high-pressure pump ⇒ Rep. gr. 23 .
– Install intake manifold (top section) ⇒ Rep. gr. 23 .

Note

Do not reuse coolant.

– Fill cooling system ⇒ page 216 .

Tightening torques

Component	Nm
Bracket for high-pressure pump to cylinder block	22
Sealing cap on oil filter housing	35
Retaining clips for oil filter housing	9
Exhaust gas recirculation cooler with change-over flap to engine	22
Connection for exhaust gas recirculation (left-side) to cylinder head	9

Protected by copyright. Copying for private or commercial purposes, in part or in whole, is not permitted unless authorised by AUDI AG. AUDI AG does not guarantee or accept any liability with respect to the correctness of information in this document. Copyright by AUDI AG.

2.7 Removing and installing exhaust gas recirculation cooler

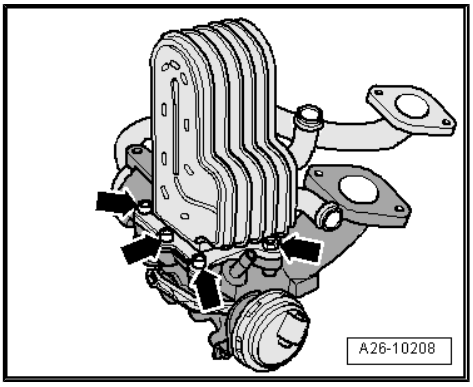

Removing

– Remove exhaust gas recirculation cooler with change-over flap ⇒ page 320 .

– Remove bolts and nuts -arrows- and take off exhaust gas recirculation cooler from change-over flap for exhaust gas recirculation.

Installing

Installation is carried out in the reverse order; note the following:

Note

Renew seals and gaskets.

– Install exhaust gas recirculation cooler with change-over flap ⇒ page 320 .

Tightening torque

Component	Nm
Exhaust gas recirculation cooler to change-over flap for exhaust gas recirculation	8 + 90° 1) 2)
• 1) Renew bolts. • 2) 90° = one quarter turn.	

Protected by copyright. Copying for private or commercial purposes, in part or in whole, is not permitted unless authorised by AUDI AG. AUDI AG does not guarantee or accept any liability with respect to the correctness of information in this document. Copyright by AUDI AG.