Protected by copyright. Copying for private or commercial purposes, in part or in whole, is not permitted unless authorised by AUDI AG. AUDI AG does not guarantee or accept any liability with respect to the correctness of information in this document. Copyright by AUDI AG.

Workshop Manual

Audi A8 2010 ➤

8-speed automatic gearbox 0BL, four-wheel drive

Edition 09.2013

List of Workshop Manual Repair GroupsList of Workshop Manual Repair GroupsList of Workshop Manual Repair Groups

Repair Group

00 - Technical data
32 - Torque converter
37 - Controls, housing
38 - Gears, control
39 - Final drive - differential

Protected by copyright. Copying for private or commercial purposes, in part or in whole, is not permitted unless authorised by AUDI AG. AUDI AG does not guarantee or accept any liability with respect to the correctness of information in this document. Copyright by AUDI AG.

Technical information should always be available to the foremen and mechanics, because their careful and constant adherence to the instructions is essential to ensure vehicle road-worthiness and safety. In addition, the normal basic safety precautions for working on motor vehicles must, as a matter of course, be observed.

All rights reserved.
No reproduction without prior agreement from publisher.

Copyright © 2013 Audi AG, Ingolstadt

D3E802693D5

Contents

00 - Technical data . . . 1

1 Identification . . . 1
1.1 Gearbox identification . . . 1
2 Safety precautions . . . 2
2.1 Safety precautions when working on vehicle . . . 2
2.2 Safety precautions when working on vehicles with start/stop system . . . 3
2.3 Safety precautions when using testers and measuring instruments during a road test . . . 3
2.4 Safety precautions when working on subframe . . . 3
2.5 Notes on tow-starting and towing . . . 4
3 Repair instructions . . . 5
3.1 Rules for cleanliness . . . 5
3.2 General notes . . . 5
3.3 General repair instructions . . . 6
3.4 Contact corrosion . . . 8
3.5 Routing and attaching pipes/hoses and wiring . . . 9
4 Technical data . . . 10
4.1 Capacities . . . 10
4.2 Oil distribution . . . 11
4.3 Allocation of gearbox to engine . . . 11
4.4 Clutch logic . . . 12
5 Transmission layout . . . 13

32 - Torque converter . . . 14

1 Torque converter . . . 14
1.1 Exploded view - torque converter . . . 14
1.2 Removing and installing torque converter . . . 14
1.3 Draining torque converter . . . 17
1.4 Checking torque converter . . . 18
1.5 Removing and installing oil seal for torque converter . . . 18

37 - Controls, housing . . . 19

1 Selector mechanism . . . 19
1.1 Exploded view - selector mechanism . . . 19
1.2 Exploded view - manual release mechanism for parking lock . . . 21
1.3 Checking selector mechanism . . . 22
1.4 Manual release from position P . . . 27
1.5 Removing and installing selector lever handle . . . 29
1.6 Removing and installing selector mechanism . . . 31
1.7 Dismantling and assembling selector mechanism . . . 32
1.8 Removing and installing manual release cable for parking lock . . . 37
1.9 Renewing selector shaft oil seal . . . 42
2 Removing and installing gearbox . . . 45
2.1 Removing gearbox . . . 45
2.2 Installing gearbox . . . 54
2.3 Tightening torques for gearbox . . . 59
3 Assembly mountings . . . 61
3.1 Exploded view - assembly mountings . . . 61
3.2 Removing and installing tunnel cross member . . . 62
4 Transporting gearbox . . . 65
5 Securing to engine and gearbox support . . . 66
6 ATF circuit . . . 67

Protected by copyright. Copying for private or commercial purposes, in part or in whole, is not permitted unless authorised by AUDI AG. AUDI AG does not guarantee or accept any liability with respect to the correctness of information in this document. Copyright by AUDI AG.

6.1 Exploded view - ATF circuit . . . 67
6.2 Removing and installing ATF cooler . . . 69
6.3 Removing and installing ATF filter . . . 70
6.4 Removing and installing ATF lines . . . 72
7 ATF . . . 74
7.1 Checking ATF level . . . 74
7.2 Draining and filling ATF . . . 77

38 - Gears, control . . . 81
1 ATF system . . . 81
1.1 Exploded view - ATF system . . . 81
1.2 Removing and installing hydraulic pulse accumulator with accumulator solenoid N485 . . . 84
1.3 Removing and installing oil pan . . . 85
2 Mechatronic unit . . . 89
2.1 Removing and installing mechatronic unit . . . 89

39 - Final drive - differential . . . 96
1 Final drive . . . 96
1.1 Exploded view - final drive . . . 96
1.2 Renewing O-ring on cover for front final drive . . . 97
2 Gear oil . . . 99
2.1 Checking gear oil level . . . 99
2.2 Draining and filling gear oil . . . 101
3 Oil seals . . . 104
3.1 Renewing oil seal (left-side) . . . 104
3.2 Renewing oil seal (right-side) . . . 106
4 Differential . . . 109
4.1 Removing and installing flange shaft (left-side) . . . 109
4.2 Removing and installing flange shaft (right-side) . . . 110
5 Centre differential . . . 114
5.1 Exploded view - centre differential . . . 114
5.2 Removing and installing centre differential . . . 115
5.3 Renewing oil seal for rear splined shaft . . . 117
5.4 Renewing ball bearing for rear splined shaft . . . 119
5.5 Renewing ball bearing for centre differential . . . 122
6 Gearbox control system . . . 124
6.1 Overview of fitting locations - gearbox control system . . . 124

Protected by copyright. Copying for private or commercial purposes, in part or in whole, is not permitted unless authorised by AUDI AG. AUDI AG does not guarantee or accept any liability with respect to the correctness of information in this document. Copyright by AUDI AG.

00 – Technical data

1 Identification

(ARL003426; Edition 09.2013)

⇒ “1.1 Gearbox identification”, page 1

1.1 Gearbox identification

Location of code letters on gearbox

- The gearbox code letters are located on the identification plate on the underside of the gearbox. Fitting location of identification plate -arrow-.

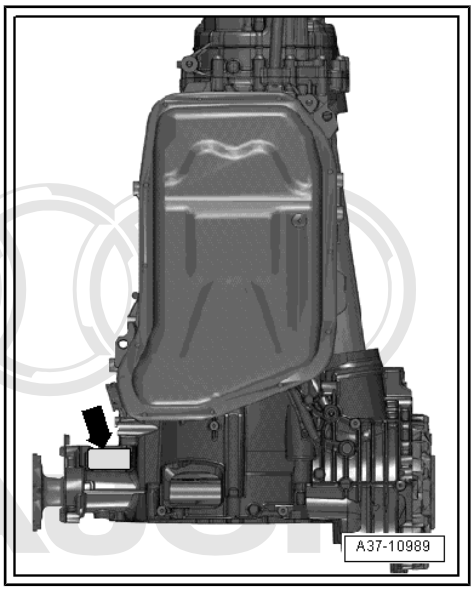

Protected by copyright. Copying for private or commercial purposes, in part or in whole, is not permitted unless authorised by AUDI AG. AUDI AG does not guarantee or accept any liability with respect to the correctness of information in this document. Copyright by AUDI AG.

Code letters and gearbox serial number

Example:

1 - Serial number of gearbox

2 - Model number

3 - Manufacturer's gearbox designation: 8HP-90

4 - Gearbox code, in this example: MNW

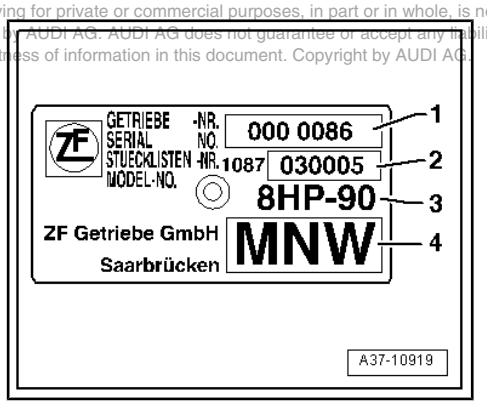

Note

- *The code letters for the gearbox are also given on the vehicle data stickers.*
- *Location of vehicle data stickers ⇒ Maintenance ; Booklet 410 .*

2 Safety precautions

⇒ “2.1 Safety precautions when working on vehicle”, page 2

⇒ “2.2 Safety precautions when working on vehicles with start/stop system”, page 3

⇒ “2.3 Safety precautions when using testers and measuring instruments during a road test”, page 3

⇒ “2.4 Safety precautions when working on subframe”, page 3

⇒ “2.5 Notes on tow-starting and towing”, page 4

Copyright by AUDI AG. Any reproduction, transmission, publication, copy in part or in whole, is not permitted unless authorised by AUDI AG. AUDI AG does not guarantee or accept any liability with respect to the correctness of information in this document. Copyright by AUDI AG.

2.1 Safety precautions when working on vehicle

Observe the following precautions to avoid possible injury and/or damage to the vehicle:

> ⚠ WARNING
>
> *Accidents and injury can be caused if a gear is inadvertently engaged while the engine is running.*
>
> - *Before performing any work with the engine running, set the gearbox to position “P” and pull up the parking brake button to apply the electromechanical parking brake.*
>
> *Danger from toxic exhaust gases when engine is running.*
>
> - *When the engine is running, the exhaust system must always be connected to the exhaust gas extractor.*
>
> *The radiator fans can start running by themselves – risk of injury.*
>
> - *Unplug electrical connectors before working in vicinity of radiator cowl.*

Observe the following precautions to avoid possible injury and/or irreparable damage to electrical and electronic components:

- Switch off ignition before disconnecting and connecting test equipment.

> ⚠ Caution
>
> *When disconnecting the battery there is a risk of serious damage to electronic components:*
>
> - *Observe the correct procedure for disconnecting the battery.*
> - *Always switch off the ignition before disconnecting the battery ⇒ Electrical system; Rep. gr. 27 ; Battery; Disconnecting and connecting battery .*

2.2 Safety precautions when working on vehicles with start/stop system

Please note the following when working on vehicles with start/stop system:

WARNING

Risk of injury due to automatic engine start on vehicles with start/stop system.

- *On vehicles with activated start/stop system (this is indicated by a message in the instrument cluster display), the engine may start automatically on demand.*
- *Therefore it is important to ensure that the start/stop system is deactivated when performing repairs (switch off ignition, if required switch on ignition again).*

2.3 Safety precautions when using testers and measuring instruments during a road test

Observe the following precautions if test equipment has to be used when road-testing the vehicle.

WARNING

Accidents can be caused if the driver is distracted by test equipment or if test equipment is not secured.

Injuries can be caused if the passenger's airbag is triggered in a collision.

- *The use of test equipment while driving causes distraction.*
- *There is an increased risk of injury if test equipment is not secured.*

Protected by copyright. Copying for private or commercial purposes, in part or in whole, is not permitted unless authorised by AUDI AG. AUDI AG does not guarantee or assume any liability with regard to the correctness of information in this document. Copyright by AUDI AG.

- *Always secure test equipment to the rear seat with a strap and have it operated from there by a second person.*

2.4 Safety precautions when working on subframe

Note the following when working on the subframe:

Caution

Risk of damage to parts of the running gear.

- *Do not let the vehicle down on the wheels if the gearbox mounting, steering rack or subframe cross brace are not properly installed.*
- *Do NOT support the vehicle at the subframe or the subframe cross brace (e.g. with a trolley jack).*

2.5 Notes on tow-starting and towing

Caution

Risk of irreparable damage to gearbox.

- *When the vehicle is towed, the gearbox must be set to position "N" or the parking lock must be manually released (⇒ page 27).*
- *The vehicle must not be towed further than 50 km or faster than 50 km/h.*

Note

It is not possible to start the engine by means of tow-starting, for instance in the case of insufficient battery charge or if the starter is not working.

Protected by copyright. Copying for private or commercial purposes, in part or in whole, is not permitted unless authorised by AUDI AG. AUDI AG does not guarantee or accept any liability with respect to the correctness of information in this document. Copyright by AUDI AG.

3 Repair instructions

⇒ “3.1 Rules for cleanliness”, page 5

⇒ “3.2 General notes”, page 5

⇒ “3.3 General repair instructions”, page 6

⇒ “3.4 Contact corrosion”, page 8

⇒ “3.5 Routing and attaching pipes/hoses and wiring”, page 9

3.1 Rules for cleanliness

- Thoroughly clean all joints and connections and the surrounding areas before dismantling.
- Use cleaning fluid - D 009 401 04- to clean the gearbox and its components.
- Use commercially available lint-free cloths for cleaning, such as the “WYPALL X70 / WORKHORSE” cloth from Kimberly-Clark Professional.
- Seal off open lines and connections immediately with clean plugs or protective caps from engine bung set - VAS 6122- .
- Place removed parts on a clean surface and cover them over. Use sheeting or lint-free cloths.
- Carefully cover or seal open components if repairs cannot be carried out immediately.
- Only install clean components: do not remove replacement parts from packaging until just before installation.
- Protect unplugged electrical connectors against dirt and moisture and make sure connections are dry when attaching.

3.2 General notes

Gearbox

- The 8-speed automatic gearbox 0BL, four-wheel drive, has eight hydraulically actuated forward gears. When the torque converter lock-up clutch closes, these forward gears act as mechanically driven gears since the slippage in the torque converter is prevented.
- A special feature of the 0BK gearbox is the location of the front final drive (front differential with flange shafts) in front of the torque converter. This allows for a more even weight distribution between the front and rear axles on the vehicle.
- For detailed information on the function of the gearbox refer to ⇒ Self-study programme No. 457 ; Audi A8 '10, Power transmission .

Torque converter

The torque converter is equipped with a lock-up clutch allowing controlled slip. Due to the new construction in this gearbox the torque converter is located behind the front final drive.

Mechatronic unit

The mechatronic unit incorporates the following components as a complete synchronised unit:

Protected by copyright. Copying for private or commercial purposes, in part or in whole, is not permitted unless authorised by AUDI AG. AUDI AG does not guarantee or accept any liability with respect to the correctness of information in this document. Copyright by AUDI AG.

- Hydraulic control system, automatic gearbox control unit - J217-
- Sensors and actuators

The mechatronic unit is installed inside the gearbox in the ATF oil pan.

Automatic gearbox control unit - J217-

The control unit is part of the mechatronic unit in the gearbox.

The gear change points are calculated automatically (depending on the driving situation and the resistance to motion).

Advantages:

- Gear change points controlled for enhanced fuel economy
- Maximum engine output is always available
- Gear-change points are adapted individually in all driving situations
- Gear-change points are infinitely variable

Variation of gear-change points for gradients

An additional gear change map automatically selects gear changes for gradients. The gear changes are selected according to accelerator pedal position and road speed.

- Gear change map for extreme uphill gradients is matched to engine output.
- Gear change map for extreme downhill gradients is matched to the braking effect of the engine.
- The driver can achieve an increased engine braking effect by directly selecting a specific gear via the tiptronic function, e.g. when towing a trailer on downhill gradients.

Selector mechanism

Protected by copyright. Copying for private or commercial purposes, in part or in whole, is not permitted unless authorised by AUDI AG. AUDI AG does not guarantee or accept any liability with respect to the correctness of information in this document. Copyright by AUDI AG.

Note

- *With the new "shift-by-wire" concept there is no mechanical connection between the selector lever and the gearbox.*
- *The gearbox is operated entirely according to the detected driver inputs, and there are no further mechanical controls.*
- *Shift-by-wire employs a new gear selector control arrangement. The selector lever no longer follows a selector gate as it is moved from one gear to the next, but always returns to its original position, much like a joystick. That means that the selector lever position is no longer identical with the currently engaged gear or selected function.*
- *The operation of the selector mechanism is described in the Owner's Manual for the vehicle and in ⇒ Self-study programme No. 457 ; Audi A8 '10, Power transmission .*
- *Before testing, ensure that any problems are not caused by incorrect operation by the driver.*
- *The actuation of the parking lock is electro-hydraulic; a manual release mechanism is provided so that the vehicle can be moved in the event of malfunction or failure* *⇒ page 27* *.*

3.3 General repair instructions

Proper tools and the maximum possible care and cleanliness are essential for satisfactory repairs to the transmission units. The usual basic safety precautions also naturally apply when carrying out repair work.

To avoid repetition, a number of generally applicable instructions for the various repair procedures are summarised here. They apply to the work described in this Manual.

Guided Fault Finding, Vehicle self-diagnosis and Test Instruments

- Before servicing the gearbox, the exact cause of the failure must be determined using the functions `Guided Fault Finding`, `Vehicle Self-diagnosis` and `Test Instruments` ⇒ Vehicle diagnostic tester.

Environmental and waste disposal regulations for oil

- ATF, gear oil and any other type of oil must be handled with care.
- Dispose of drained oil properly.
- Always adhere to statutory environmental and waste disposal regulations.
- Observe the information shown on the packaging of the oil.

Special tools

For a complete list of special tools used in this Workshop Manual ⇒ Workshop equipment and special tools

Gearbox

- Observe rules for cleanliness when working on gearbox ⇒ page 5 .
- The engine must not be run and the vehicle must not be towed if the centre differential housing has been removed or if there is no ATF in the gearbox.
- After installing, the following fluid levels must be checked and topped up if necessary: ATF in gearbox ⇒ page 74 and gear oil in gearbox ⇒ page 99 . Capacities ⇒ page 10 , specifications ⇒ Electronic parts catalogue .
- The manual release mechanism for the parking lock must be checked after removing and installing the gearbox, or if work has been carried out on the manual release mechanism ⇒ page 27 .

O-rings, oil seals and gaskets

- Always renew O-rings, oil seals and gaskets.
- After removing gaskets and seals, always inspect the contact surface on the housing or shaft for burrs resulting from removal or for other signs of damage.
- Thoroughly clean housing joint surfaces before assembling.
- Lightly lubricate the outer circumference and sealing lip of oil seals with ATF before installing.
- Lightly lubricate O-rings with ATF before installation to prevent them from being crushed during assembly.
- Use only ATF for parts running in ATF. Other lubricants will cause malfunction of the gearbox hydraulics.

Protected by copyright. Copying or distribution of this document is not permitted without written permission from AUDI AG. We do not make any claim to the correctness, completeness or up-to-date nature of information in this document. Copyright by AUDI AG.

- The open side of the oil seal should face the side containing the fluid.
- When installing a new oil seal, position the seal such that the sealing lip does not contact the shaft in the same place as the old seal (make use of installation depth tolerances).
- After installing, the following fluid levels must be checked and topped up if necessary: ATF in gearbox ⇒ page 74 and gear

oil in gearbox ⇒ page 99 . Capacities ⇒ page 10 , specifications ⇒ Electronic parts catalogue .

Nuts, bolts

- Loosen bolts in reverse sequence to the specified tightening sequence.
- Bolts and nuts used to secure covers and housings must be tightened in steps according to the specified tightening sequence and method.
- Nuts and bolts which secure covers and housings should be loosened and tightened in diagonal sequence and in stages if no tightening sequence is specified.
- Renew self-locking nuts and bolts.
- Use a wire brush to clean the threads of bolts which are secured with locking fluid. Then apply locking fluid - AMV 185 101 A1- to bolt threads before installing.
- Threaded holes which take self-locking bolts or bolts coated with locking fluid must be cleaned (using a tap or similar). Otherwise there is a danger of the bolts shearing off the next time they are removed.
- The tightening torques stated apply to non-oiled nuts and bolts.

Locking elements

- Do not over-stretch circlips.
- Renew circlips which have been damaged or over-tensioned.
- Circlips must be properly seated in the base of the groove.

Bearings

- Install needle bearings so the lettering (side with thicker metal) faces towards the installing tool.
- Lubricate bearings with gear oil or ATF, depending on fitting location.
- Do not interchange inner or outer races of bearings of the same size.
- Always renew the tapered roller bearings on one shaft together and use new bearings from a single manufacturer.

Shims

- Use a micrometer to measure the shims at several points. Different shim thicknesses make it possible to obtain the exact shim thickness required; if necessary, fit 2 shims.
- Check for burrs and damage. Install only shims which are in perfect condition.

Copyright by AUDI AG. This document is intended for internal use only. Any use for commercial purposes, in part or in whole, is not permitted unless authorised by AUDI AG. AUDI AG does not guarantee or accept any liability with respect to the correctness of information in this document. Copyright by AUDI AG.

3.4 Contact corrosion

Contact corrosion can occur if unsuitable fasteners are used on the vehicle (bolts, nuts, washers etc.).

For this reason, only fasteners with a special surface coating are fitted.

Rubber or plastic parts and adhesives also consist of non-conductive materials.

If you are not sure whether used parts can be re-installed, always fit new parts ⇒ Electronic parts catalogue .

Please note:

- Use only genuine spare parts: these have been fully tested and are compatible with aluminium.
- We recommend the use of accessories approved by Audi.
- Damage resulting from contact corrosion is not covered by the warranty.

3.5 Routing and attaching pipes/hoses and wiring

- Mark fuel lines, vacuum lines, pipes/hoses for activated charcoal filter system and electrical wiring etc. before removal so they can be re-installed in the original positions and correctly connected. If necessary, make sketches or take photographs.
- To prevent damaging pipes, hoses and wiring, ensure sufficient clearance from all moving or hot components in engine compartment (little space in engine compartment).

Protected by copyright. Copying for private or commercial purposes, in part or in whole, is not permitted unless authorised by AUDI AG. AUDI AG does not guarantee or accept any liability with respect to the correctness of information in this document. Copyright by AUDI AG.

4 Technical data

⇒ “4.1 Capacities”, page 10

⇒ “4.2 Oil distribution”, page 11

⇒ “4.3 Allocation of gearbox to engine ”, page 11

⇒ “4.4 Clutch logic”, page 12

4.1 Capacities

⇒ “4.1.1 Capacities - ATF section in gearbox”, page 10

⇒ “4.1.2 Capacities - front final drive and transfer box”, page 10

4.1.1 Capacities - ATF section in gearbox

Capacities	Automatic gearbox 0BL
Initial filling by manufacturer	Approx. 10.1 ltr.
Fluid filling after gearbox has been drained in workshop	Approx. 4.5 ltr. Fluid change capacity can vary according to engine version
Fluid change	◆ No change required ◆ Life filling; change only after repair, e.g. if ATF oil pan has been removed
Lubricant	ATF for automatic gearbox 0BL ⇒ Electronic parts catalogue

Caution

Risk of malfunction or gearbox failure.

- *Use only the ATF supplied as a replacement part for automatic gearbox 0BL ⇒ Electronic parts catalogue .*

- ⇒ “7.1 Checking ATF level”, page 74
- ⇒ “7.2 Draining and filling ATF”, page 77

4.1.2 Capacities - front final drive and transfer box

Capacities	Automatic gearbox 0BL
Initial filling	2.4 l
Fluid change	◆ No change required ◆ Lifetime filling; change only after repairs, e.g. if cover for front final drive or centre differential housing has been removed
Lubricant	Gear oil for automatic gearbox 0BL ⇒ Electronic parts catalogue

- ⇒ “2.1 Checking gear oil level”, page 99
- ⇒ “2.2 Draining and filling gear oil”, page 101

Protected by copyright. Copying for private or commercial purposes, in part or in whole, is not permitted unless authorised by AUDI AG. AUDI AG does not guarantee or accept any liability with respect to the correctness of information in this document. Copyright by AUDI AG.

4.2 Oil distribution

Common oil filling

The automatic gearbox 0BL, four-wheel drive has a common oil filling for the front final drive and transfer box.

- The oil chambers in the front final drive -3- and the transfer box -1- are interconnected by means of the protective tube -2-.
- The side shaft runs in gear oil in the protective tube.

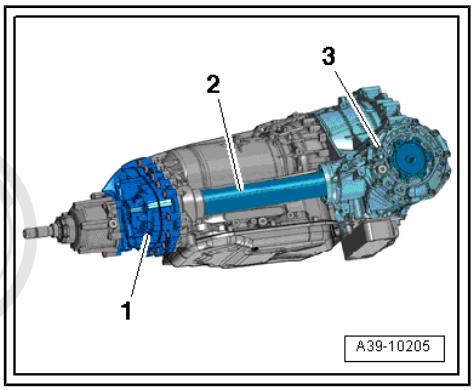

4.3 Allocation of gearbox to engine

Automatic gearbox		0BL four-wheel drive		
Gearbox	Code letters	MNW	MXX	NLC
	Manufac-tured fro m to	11.2009 02.2010	02.2010 11.2011	11.2011 09.2013
Torque con-verter	Code letters	G128	D138	D138
Allocation	Model	Audi A8 2010 ►	Audi A8 2010 ►	Audi A8 2010 ►
	Engine	4.2 ltr. TDI - 258 kW	4.2 ltr. TDI - 258 kW	4.2 ltr. TDI - 258 kW
Primary drive		25 : 29 = 0.862	25 : 29 = 0.862	25 : 29 = 0.862
Spur gear drive to front axle		31 : 29 = 1.069	31 : 29 = 1.069	31 : 29 = 1.069
Front axle bevel gearing		31 : 12 = 2.583	31 : 12 = 2.583	31 : 12 = 2.583
Overall front drive ratio = Primary drive x spur gear drive x bevel gearing		2.381	2.381	2.381
Rear axle bevel gearing		36 : 13 = 2.769	36 : 13 = 2.769	36 : 13 = 2.769
Overall rear drive ratio = Rear axle bevel gearing x primary drive		2.387	2.387	2.387
Oil filling in front final drive/transfer box		Common	Common	Common

Protected by copyright. Copying for private or commercial purposes, in part or in whole, is not permitted unless authorised by AUDI AG. AUDI AG does not guarantee or assume liability with respect to the correctness of information in this document. Copyright by AUDI AG.

Automatic gearbox		0BL four-wheel drive		
Gearbox	Code letters	PRX		
	Manufac-tured fro m to	09.2013		
Torque con-verter	Code letters	B169		
Allocation	Model	Audi A8 2010 ►		
	Engine	4.2 ltr. TDI - 258 kW		
Primary drive		25 : 29 = 0.862		
Spur gear drive to front axle		31 : 29 = 1.069		
Front axle bevel gearing		31 : 12 = 2.583		

Automatic gearbox	0BL four-wheel drive		
Overall front drive ratio = Primary drive x spur gear drive x bevel gearing	2.381		
Rear axle bevel gearing	36 : 13 = 2.769		
Overall rear drive ratio = Rear axle bevel gearing x primary drive	2.387		
Oil filling in front final drive/transfer box	Common		

4.4 Clutch logic

Copyright. Copying for private or commercial purposes, in part or in whole, is not permitted unless authorised by AUDI AG. AUDI AG does not guarantee or accept any liability with respect to the correctness of information in this document. Copyright by AUDI AG.

Gear	Brake		Clutch		
	A	B	C	D	E
1	x	x	x	-	-
2	x	x	-	-	x
3	-	x	x	-	x
4	-	x	-	x	x
5	-	x	x	x	-
6	-	-	x	x	x
7	x	-	x	x	-
8	x	-	-	x	x
R	x	x	-	x	-

- x = Brake/clutch active
- - = Brake/clutch not active

5 Transmission layout

1 - Rear final drive

- ❑ Removing and installing ⇒ Final drive; Rep. gr. 39 ; Final drive; Removing and installing final drive

2 - Propshaft

- ❑ Removing and installing ⇒ Final drive; Rep. gr. 39 ; Propshaft; Removing and installing propshaft

3 - Automatic gearbox 0BL, four-wheel drive

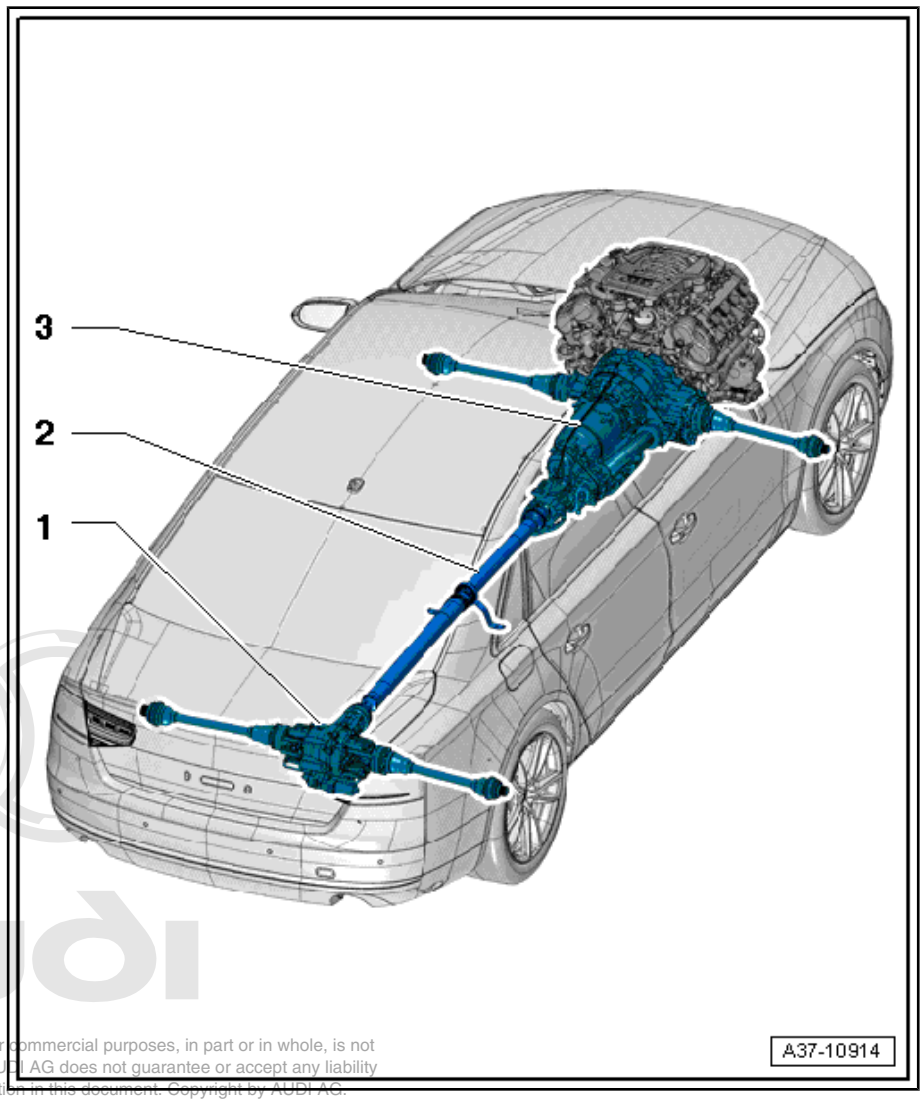

Protected by copyright. Copying for private or commercial purposes, in part or in whole, is not permitted unless authorised by AUDI AG. AUDI AG does not guarantee or accept any liability with respect to the correctness of information in this document. Copyright by AUDI AG.

32 – Torque converter

1 Torque converter

⇒ “1.1 Exploded view - torque converter”, page 14

⇒ “1.2 Removing and installing torque converter”, page 14

⇒ “1.3 Draining torque converter”, page 17

⇒ “1.4 Checking torque converter”, page 18

⇒ “1.5 Removing and installing oil seal for torque converter”, page 18

1.1 Exploded view - torque converter

1 - Torque converter

- There are different types of torque converter. The component is marked with code letters.
- Torque converter/gearbox allocation ⇒ page 11 .
- Removing and installing ⇒ page 14

2 - Gearbox housing

3 - Oil seal

- For torque converter
- Renewing ⇒ page 18

4 - O-ring

- Renew

5 - Bolt

- 6x
- Renew
- Tightening procedure ⇒ page 58
- 60 Nm

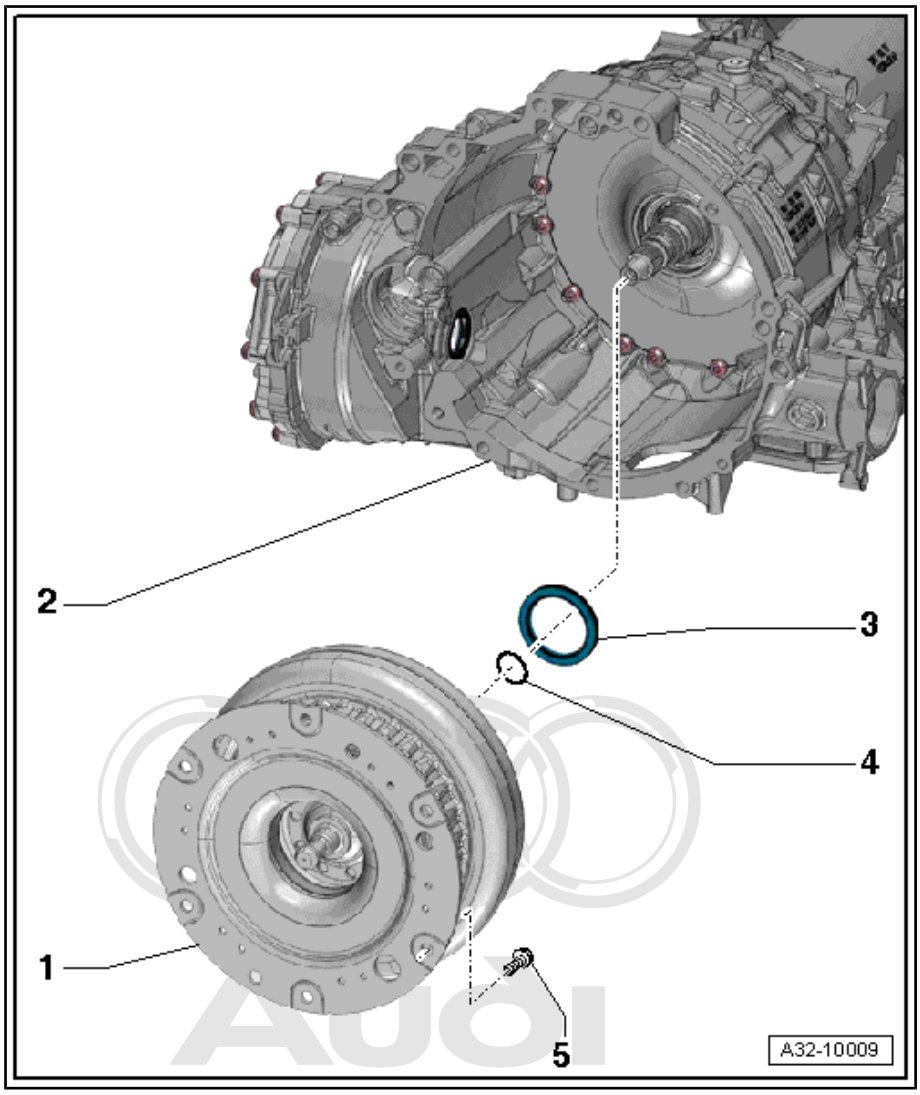

Protected by copyright. Copying for private or commercial purposes, in part or in whole, is not permitted unless authorised by AUDI AG. AUDI AG does not guarantee or accept any liability with respect to the correctness of information in this document. Copyright by AUDI AG.

1.2 Removing and installing torque converter

Special tools and workshop equipment required

- Extractor - T40176-

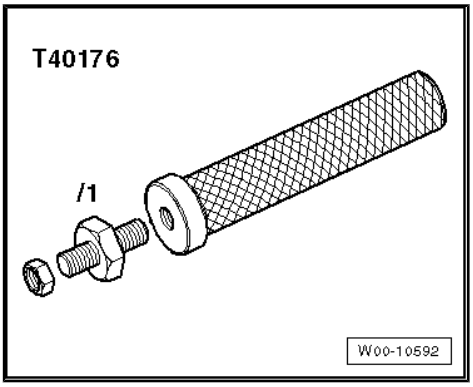

- Depth gauge
- Grease for clutch plate splines - G 000 100-
- Sealing grease - G 052 128 A1-

Removing

– Remove flange shaft (left-side) ⇒ page 109 .

– Attach extractor - T40176- to torque converter -A- using nut -B-.

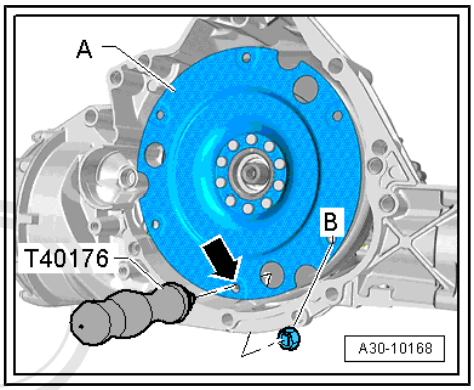

– Turn extractor - T40176- upwards.

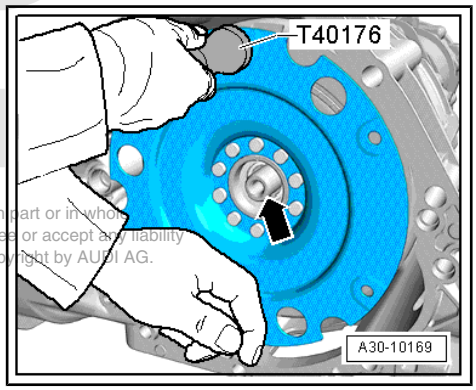

Note

Keep hold of the bottom of the torque converter, as shown in the illustration, to prevent it from tilting over.

Protected by copyright. Copying for private or commercial purposes, in part or in whole, is not permitted unless authorised by AUDI AG. AUDI AG does not guarantee or accept any liability with respect to the correctness of information in this document. Copyright by AUDI AG.

– Pull torque converter off input shaft -arrow- keeping torque converter straight.

– Put torque converter down carefully, e.g. on work bench.

Installing

Installation is carried out in reverse sequence; note the following:

– Thoroughly clean area of torque converter bellhousing leading to differential -arrow A-, and oil seal -arrow B-.

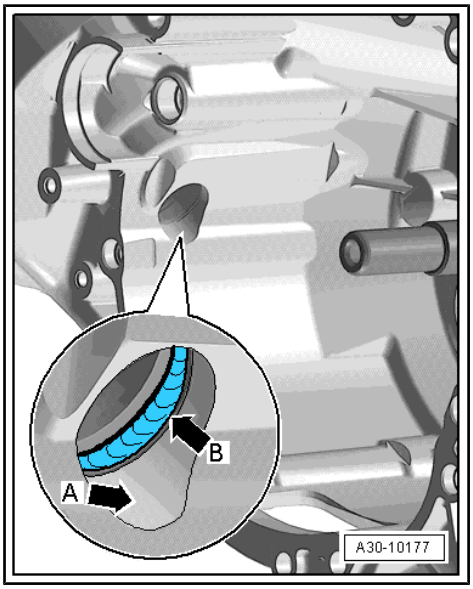

Note

If oil seal between differential and gearbox housing -arrow B- is damaged, it must be renewed ⇒ page 96 .

– Pack space between sealing lip and dust lip half-full with sealing grease - G 052 128 A1- .

– Renew O-ring -arrow- on input shaft.

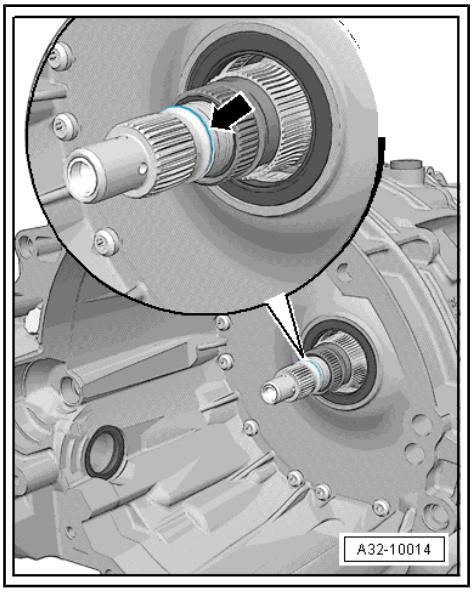

Protected by copyright. Copying for private or commercial purposes, in part or in whole, is not permitted unless authorised by AUDI AG. AUDI AG does not guarantee or accept any liability with respect to the correctness of information in this document. Copyright by AUDI AG.

– Check torque converter ⇒ page 18 .

– Check torque converter oil seal for damage and renew if necessary ⇒ page 18 .

– Attach extractor - T40176- to torque converter with nut.

– Use extractor - T40176- to carefully slide torque converter onto input shaft -2- as far as first stop, taking care to keep torque converter straight.

– Turn the torque converter and at the same time press it inwards lightly until the torque converter splines engage in the drive hub for the ATF pump and the torque converter slides in a noticeable distance.

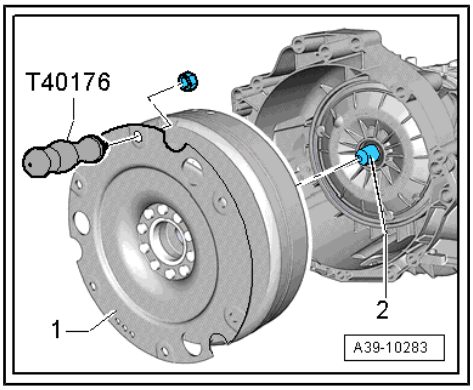

Caution

The drive hub for the ATF pump can be damaged if the torque converter is not fitted correctly.

- *Checking position of torque converter.*

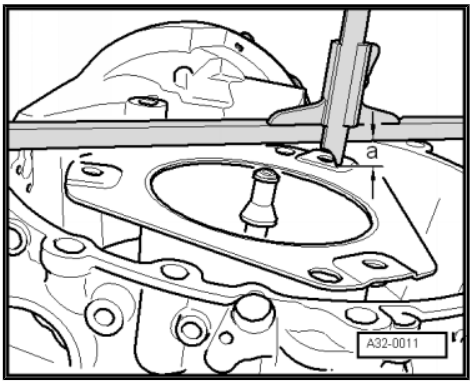

If the torque converter has been correctly installed, the distance -a- between the surface of the mounting holes and the contact surface of the torque converter bellhousing should be:

- Dimension -a- = 16 mm (minimum)

– Detach extractor - T40176- from torque converter -A-.

– Remove nut -B-.

– Install flange shaft (left-side) ⇒ page 109 .

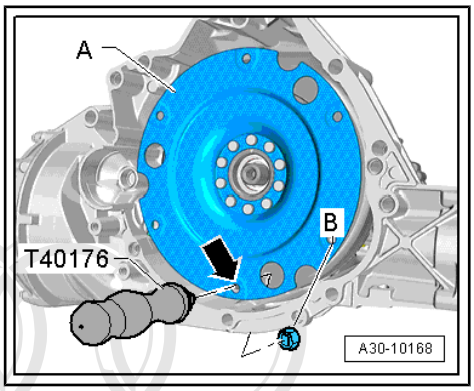

1.3 Draining torque converter

Special tools and workshop equipment required

- Used oil collection and extraction unit - VAS 6622-

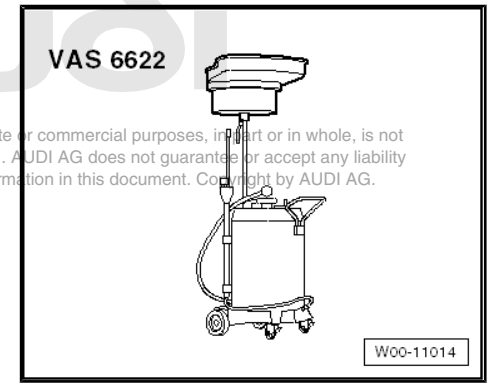

Protected by copyright. Copying for private or commercial purposes, in part or in whole, is not permitted unless authorised by AUDI AG. AUDI AG does not guarantee or accept any liability with respect to the correctness of information in this document. Copyright by AUDI AG.

Procedure

Drain the torque converter as follows if the ATF is very dirty due to component wear, or when performing a major gearbox overhaul:

– Extract ATF from torque converter using used oil collection and extraction unit - VAS 6622- or -V.A.G 1782- .

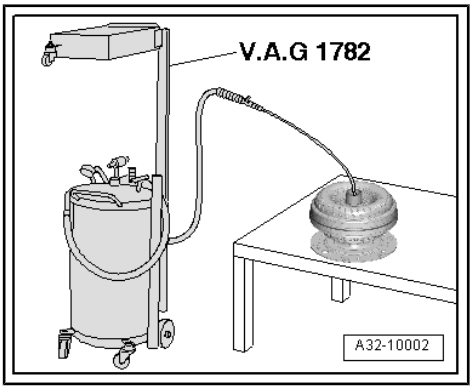

1.4 Checking torque converter

– Check hub -arrow- of torque converter for scoring.

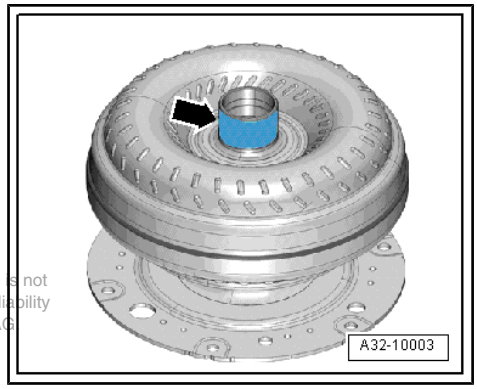

Note

The torque converter must be renewed as a complete unit if it is damaged or defective.

Protected by copyright. Copying for private or commercial purposes, in part or in whole, is not permitted unless authorised by AUDI AG. AUDI AG does not guarantee or accept any liability with respect to the correctness of information in this document. Copyright by AUDI AG

1.5 Removing and installing oil seal for torque converter

Special tools and workshop equipment required

♦ Extractor tool -T20143/2-

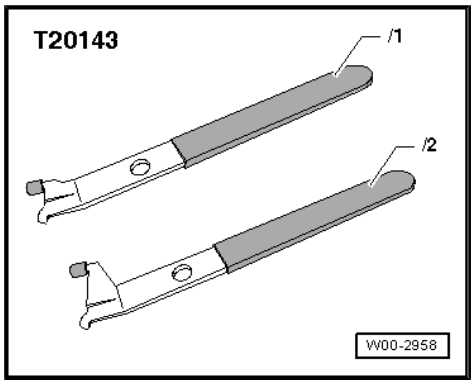

♦ Thrust piece - T40240-

Procedure

– Remove torque converter ⇒ page 14 .

– Prise out oil seal for torque converter with extractor tool -T20143/2- .

– Lightly lubricate outer circumference and sealing lips of oil seal with ATF.

• Installation position: open side of oil seal points towards gearbox

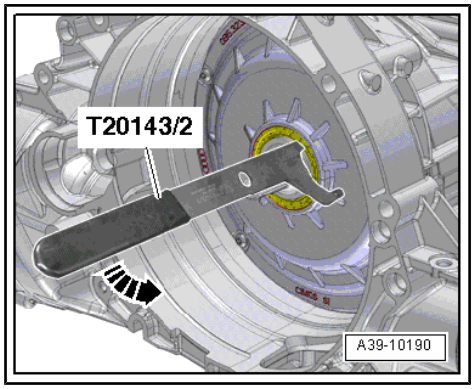

– Drive in torque converter oil seal with thrust piece - T40240- -1- until thrust piece reaches stop.

– Install torque converter ⇒ page 14 .

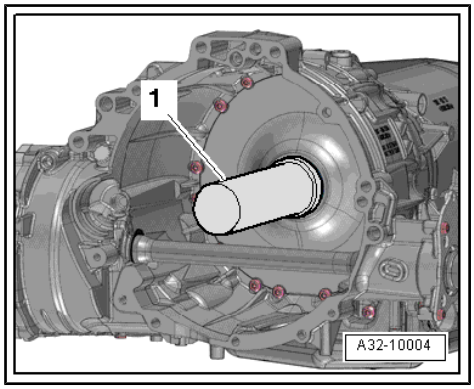

37 – Controls, housing

1 Selector mechanism

⇒ “1.1 Exploded view - selector mechanism”, page 19

⇒ “1.2 Exploded view - manual release mechanism for parking lock”, page 21

⇒ “1.3 Checking selector mechanism”, page 22

⇒ “1.4 Manual release from position P”, page 27

⇒ “1.5 Removing and installing selector lever handle”, page 29

⇒ “1.6 Removing and installing selector mechanism”, page 31

⇒ “1.7 Dismantling and assembling selector mechanism”, page 32

⇒ “1.8 Removing and installing manual release cable for parking lock”, page 37

⇒ “1.9 Renewing selector shaft oil seal”, page 42

1.1 Exploded view - selector mechanism

Check selector mechanism before dismantling ⇒ page 22 .

> ⚠ Caution
>
> *Electrical components of selector mechanism can be irreparably damaged by electrostatic discharge.*

Protected by copyright. Copying for private or commercial purposes, in part or in whole, is not permitted unless authorised by AUDI AG. AUDI AG does not guarantee or accept any liability with respect to the correctness of information in this document. Copyright by AUDI AG.

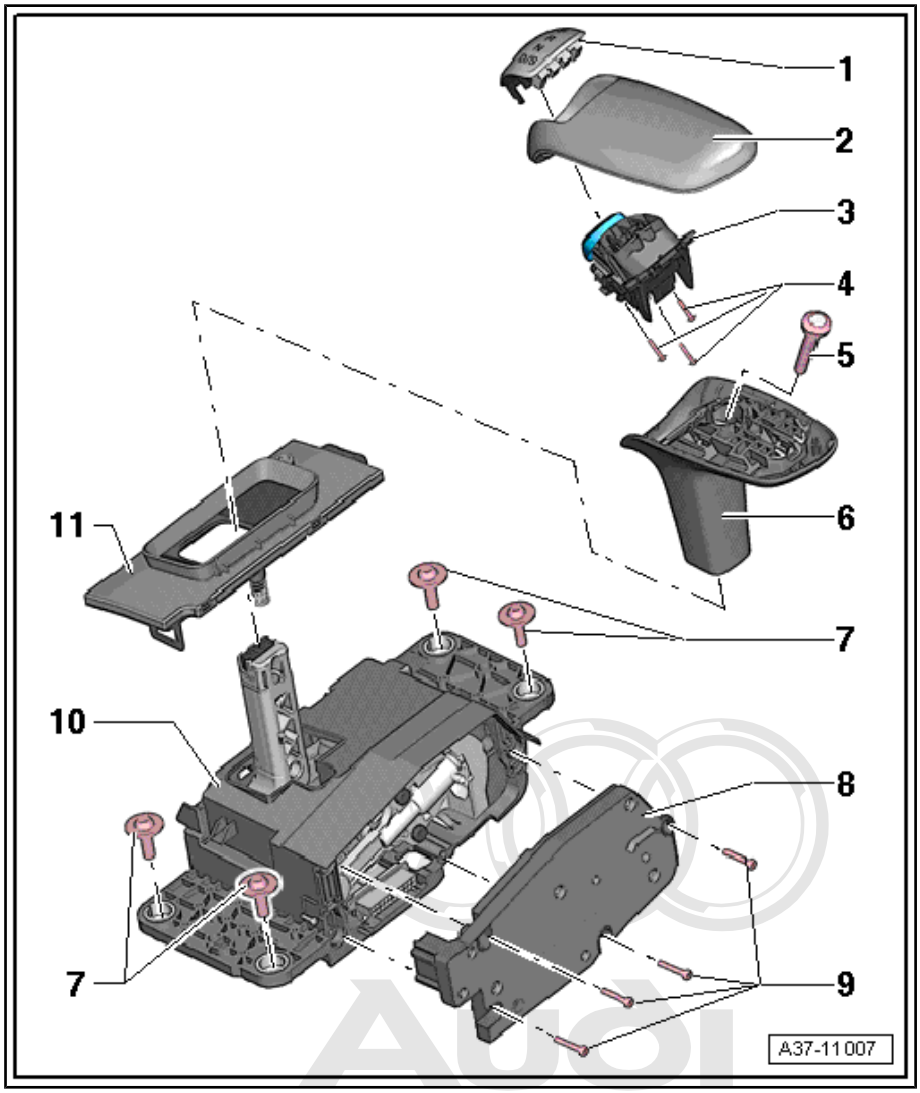

1 - Cover

- ❑ Clipped into selector lever handle (top section)
- ❑ Removing and installing ⇒ "1.7.1 Removing and installing button for selector lever release E681 and selector lever position display Y26 ", page 32

2 - Selector lever handle (top section)

- ❑ Removing and installing ⇒ page 29

3 - Button for selector lever release - E681- and selector lever position display - Y26-

- ❑ Can only be renewed as one unit
- ❑ Removing and installing ⇒ page 32
- ❑ The selector lever is released electrically by the button for selector lever release - E681-
- ❑ The selector lever position display - Y26- shows the gear that is currently engaged

4 - Bolt

- ❑ 3x
- ❑ 0.25 Nm

5 - Bolt

- ❑ Special bolt: this bolt does not have a standard thread, and may only be replaced with the correct genuine part (same as original equipment)
- ❑ 7 Nm

Protected by copyright. Copying for private or commercial purposes, in part or in whole, is not permitted unless authorised by AUDI AG. AUDI AG does not guarantee or accept any liability with respect to the correctness of information in this document. Copyright by AUDI AG.

6 - Selector lever handle (bottom section)

- ❑ Removing and installing ⇒ page 29

7 - Bolt

- ❑ 4x
- ❑ Special bolts: these bolts do not have a standard thread, and may only be replaced with the correct genuine parts (same as original equipment)
- ❑ 8 Nm

8 - Selector lever sensors control unit - J587- with selector lever position sender - G727-

- ❑ Use ESD workplace - VAS 6613- when removing
- ❑ Removing and installing ⇒ page 34

9 - Bolt

- ❑ 4x
- ❑ Tightening torque and sequence ⇒ page 21

10 - Shift unit

- ❑ Can only be renewed as a complete unit
- ❑ With selector lever - E313- , solenoid 1 for selector lever lock - N496- , solenoid 2 for selector lever lock - N497- , solenoid 3 for selector lever lock - N498- , solenoid 4 for selector lever lock - N499- , solenoid 5 for selector lever lock - N500-

- ❑ Removing and installing ⇒ page 31

11 - Sliding cover

Tightening torque and sequence for selector lever sensors control unit - J587-

– Tighten bolts to 1.1 Nm in sequence -1 ... 4-.

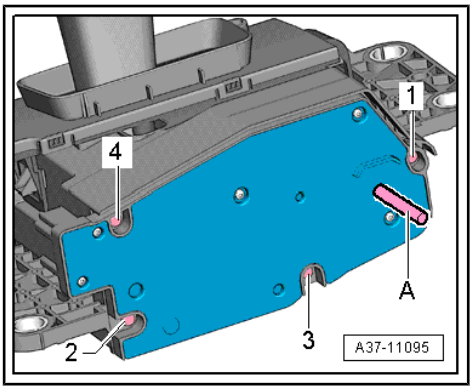

Note

It is important to keep exactly to the specified installation procedure *⇒ page 34* *.*

1.2 Exploded view - manual release mechanism for parking lock

1 - Manual release lever
- ❑ For parking lock

2 - Nut
- ❑ 2x
- ❑ 2.5 Nm

3 - Bolt
- ❑ 9 Nm

4 - Manual release cable (front)
- ❑ For parking lock
- ❑ Do not bend or kink
- ❑ Removing and installing ⇒ page 37

5 - Bolt
- ❑ 2x
- ❑ 9 Nm

6 - Gearbox selector lever
- ❑ For manual release of parking lock

7 - Retaining clip
- ❑ For selector lever cable
- ❑ Renew

8 - Manual release cable (rear)
- ❑ For parking lock
- ❑ Do not bend or kink
- ❑ Removing and installing ⇒ page 38

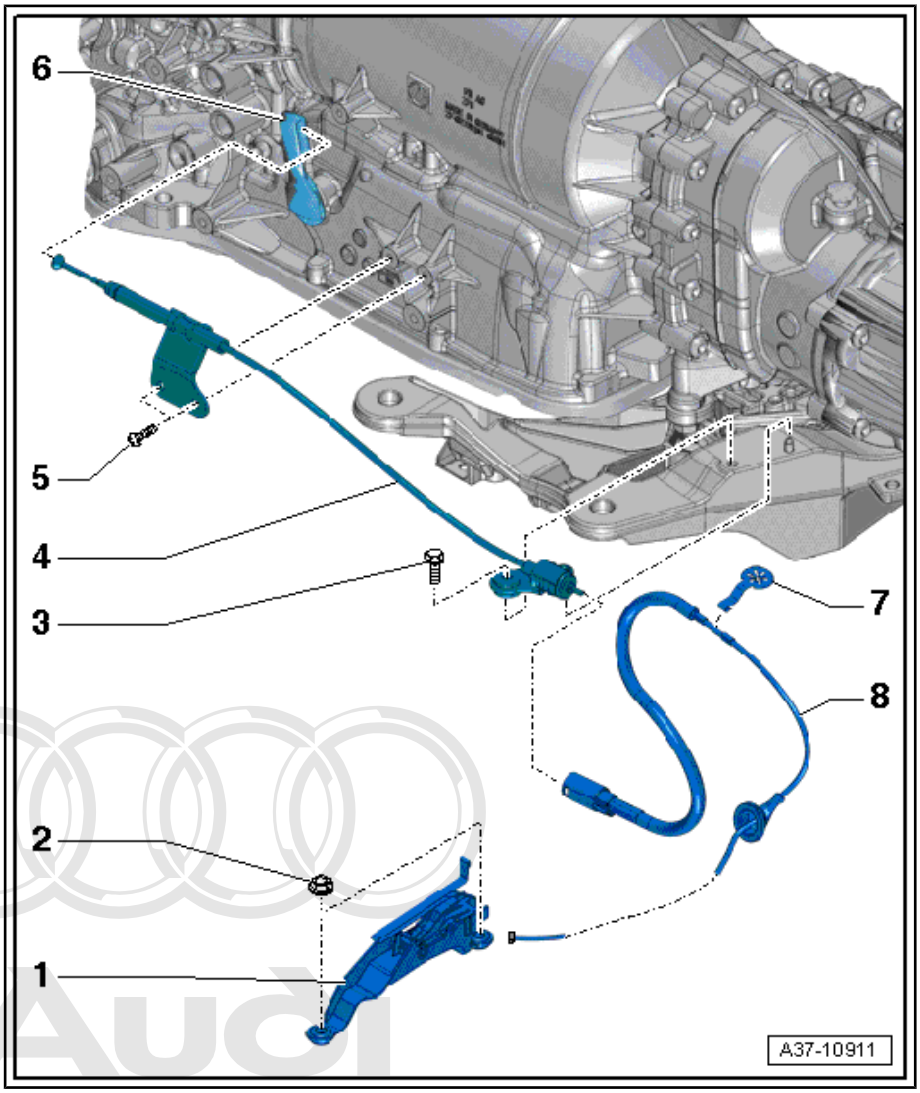

Protected by copyright. Copying for private or commercial purposes, in part or in whole, is not permitted unless authorised by AUDI AG. AUDI AG does not guarantee or accept any liability with respect to the correctness of information in this document. Copyright by AUDI AG.

1.3 Checking selector mechanism

WARNING

Accidents and injury can be caused if a gear is inadvertently engaged while the engine is running.

- *Before performing any work with the engine running, set the gearbox to position "P" and pull up the parking brake button to apply the electromechanical parking brake.*
- *Observe safety precautions when the vehicle is moving ⇒ page 2 .*
- *You must work through all the tests listed. If the specified results are not obtained, perform "Guided Fault Finding" using vehicle diagnostic tester .*

Protected by copyright. Copying for private or commercial purposes, in part or in whole, is not permitted unless authorised by AUDI AG. No liability can be accepted for the content provided.

Overview:

- 1. Checking locking functions / button for selector lever release - E681- ⇒ page 23
- 2. Checking operation of selector mechanism ⇒ page 25
- 3. Checking displays in instrument cluster ⇒ page 26
- 4. Checking ignition key removal lock ⇒ page 27

Note

To ensure that it functions correctly, it is important to perform a complete check of the selector mechanism.

Check 1: Checking locking functions / button for selector lever release - E681-

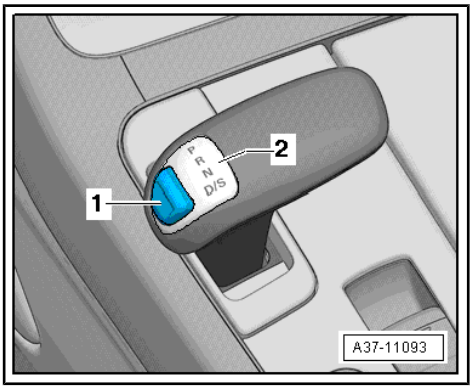

- Electromechanical parking brake applied

– Start engine and run at idling speed.

Check 1, step 1:

– Shift gearbox into “P”.

Specifications:

- Position “P” should be displayed in the instrument cluster and on the selector lever position display - Y26- , -2-.

Check 1, step 2:

- Do not depress brake pedal.

– Press button for selector lever release - E681- , -1- and pull selector lever towards rear.

Specifications:

- It should not be possible to move the selector lever towards the rear (lever is locked).
- The gearbox should remain in position “P”.
- The following message should appear in the instrument cluster: “To select gear press brake pedal”.

Check 1, step 3:

- Do not press button for selector lever release - E681- -1-.

– Press brake pedal and pull selector lever towards rear.

Specifications:

- It should not be possible to move the selector lever towards the rear (lever is locked).
- The gearbox should remain in position “P”.

Protected by copyright. Copying or distribution for commercial purposes, in part or in whole, is not permitted unless authorised by AUDI AG. AUDI AG does not guarantee or accept any liability with respect to correctness of information in this document. Copyright by AUDI AG.

Check 1, step 4:

– Press and hold brake pedal.

– Press button for selector lever release - E681- , -1-.

– Pull selector lever towards rear and select position “D/S”.

Specifications:

- Position “D” should be displayed in the instrument cluster.

Check 1, step 5:

– Press and hold brake pedal.

- Do not press button for selector lever release - E681- -1-.

– Push selector lever forwards.

Specifications:

- It should not be possible to move the selector lever forwards (lever is locked).
- The gearbox should remain in position “D”.

– Pull selector lever towards rear to select position “S”.

Specifications:

- Position “S” should be displayed in the instrument cluster.

If results do not match specifications:

– Check whether selector lever handle is correctly installed ⇒ page 29 .
– Perform “Guided Fault Finding” ⇒ Vehicle diagnostic tester.

Protected by copyright. Copying for private or commercial purposes, in part or in whole, is not permitted unless authorised by AUDI AG. AUDI AG does not guarantee or accept any liability with respect to the correctness of information in this document. Copyright by AUDI AG.

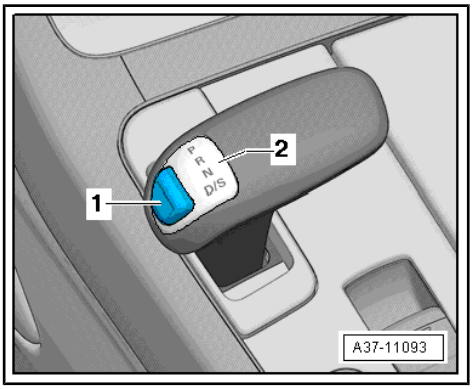

Check 2: Checking operation of selector mechanism

– Start engine.

Check 2, step 1:

– Shift gearbox into “D/S”.

– Shift gearbox into “N”.

• Do not press button for selector lever release - E681- -1- and do not press brake pedal.

– Pull selector lever towards rear and select position “D/S”.

Specifications:

• When you shift into selector lever position “N” with the vehicle moving at a speed above 5 km/h, the selector lever lock must not engage and block the selector lever. It should be possible to shift the selector lever into position “D/S”.

• When you shift into selector lever position “N” with the vehicle moving at a speed below 2 km/h (almost stationary), the solenoids for the selector lever lock should only engage after about 1 second. The selector lever can then only be shifted into position “D/S” when the brake pedal is pressed.

Check 2, step 2:

– Shift gearbox into “N”.

• Do not press button for selector lever release - E681- -1-.

– Depress brake pedal.

Specifications:

• It should not be possible to move the selector lever forwards; it should not be possible to select position “R”.

• The gearbox should remain in position “N”.

Protected by copyright. Copying for private or commercial purposes, in part or in whole, is not permitted unless authorised by AUDI AG. AUDI AG does not guarantee or accept any liability with respect to the correctness of information in this document. Copyright by AUDI AG.

Check 2, step 3:

– Shift gearbox into “D/S”.

– Shift gearbox into “N”.

– Shift gearbox into “R”.

– Shift gearbox into “P”.

Specifications:

• The selected positions should be displayed correctly in the instrument cluster and on the selector lever position display - Y26- -2-. The displays should match.

– Do not depress brake pedal.

Specifications:

• The selector lever should be locked; even when the button for selector lever release - E681- , -1- is pressed, it should not be possible to move the selector lever out of position “P”.

If results do not match specifications:

– Check whether selector lever handle is correctly installed ⇒ page 29 .

– Perform “Guided Fault Finding” ⇒ Vehicle diagnostic tester.

Check 3: Checking displays in instrument cluster

– Start engine.

Check 3, step 1:

Specifications:

- When you press the button for selector lever release - E681- -1- or move the selector lever to a new position, the complete display of the gearbox positions should appear in the instrument cluster for 5 seconds in addition to the display showing the current position.

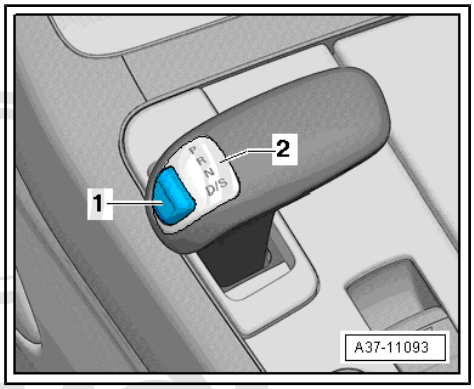

Check 3, step 2:

– With position “D/S” selected, press button -M- on steering wheel to select manual mode “M” (tiptronic).

- Mode "M" should be displayed in the instrument cluster.

– With the vehicle moving, and mode “M” (tiptronic) selected, operate the steering wheel paddles -(+)- and -(–)-.

- The selector lever position display in the instrument cluster should change one gear up (+) or down (–).

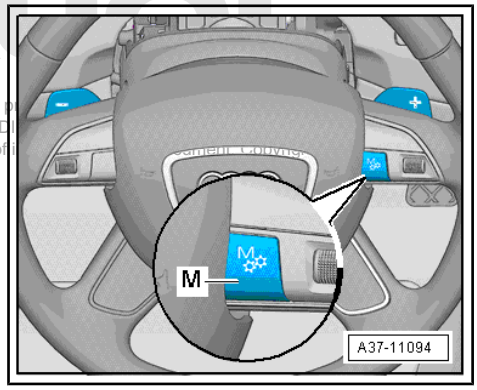

Protected by copyright. Copying for priv
permitted unless authorised by AUDI
with respect to the correctness of

Check 3, step 3:

– Shift gearbox into “P”.

– Switch off engine.

– Switch on ignition.

- Do not depress brake pedal.

– Press button for selector lever release - E681- , -1-.

Specifications:

- The following message should appear in the instrument cluster: “To select R, N, D press brake pedal and start engine”.

If results do not match specifications:

– Check whether selector lever handle is correctly installed ⇒ page 29 .

– Perform “Guided Fault Finding” ⇒ Vehicle diagnostic tester.

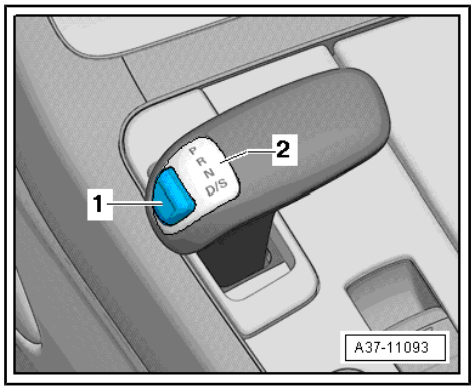

Check 4: Checking ignition key removal lock (vehicles with ignition lock)

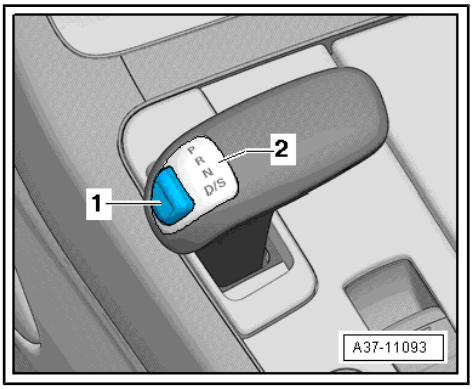

Check 4, step 1:

– Insert ignition key in ignition lock.

– Start engine.

– Shift gearbox into “D/S”.

• Vehicle stationary.

– Switch off engine, leave ignition key in ignition lock.

Specifications:

• The gearbox should engage position “P” automatically without delay (and without the driver moving the selector lever).

• Position “P” should be displayed in the instrument cluster and on the selector lever position display - Y26- , -2-.

Check 4, step 2:

– Insert ignition key in ignition lock.

– Start engine.

– Shift gearbox into “N”.

• Vehicle stationary.

Protected by copyright. Copying for private or commercial purposes, in part or in whole, is not permitted unless authorised by AUDI AG. AUDI AG does not guarantee or accept any liability with respect to the correctness of information in this document. Copyright by AUDI AG.

– Switch off engine, leave ignition key in ignition lock.

– Open driver's door.

Specifications:

• The following message should appear in the instrument cluster: “Vehicle may roll! Selector lever not in P”.

• A warning tone should also sound.

– Remove ignition key

Specifications:

• The gearbox should engage position “P” automatically without delay (and without the driver moving the selector lever).

• Position “P” should be displayed in the instrument cluster and on the selector lever position display - Y26- , -2-.

If results do not match specifications:

– Check whether selector lever handle is correctly installed ⇒ page 29 .

– Perform “Guided Fault Finding” ⇒ Vehicle diagnostic tester.

1.4 Manual release from position P

Note

The manual release mechanism for the parking lock must be checked after removing and installing the gearbox, or if work has been carried out on the manual release mechanism.

Releasing

WARNING

Accident risk; vehicle can start rolling.

- *Pull up parking brake button to apply electromechanical parking brake.*

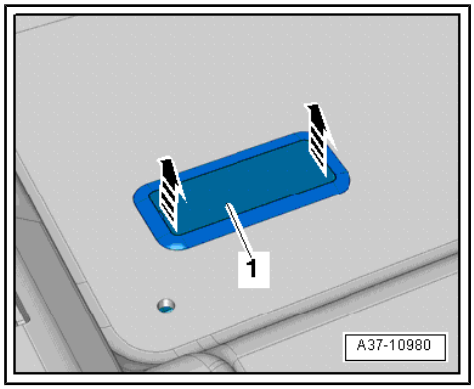

– Remove floor mat.

– Lever off cover -1- for manual release mechanism using a screwdriver and detach -arrows-.

– Pull strap in direction of -arrow- until release lever engages.

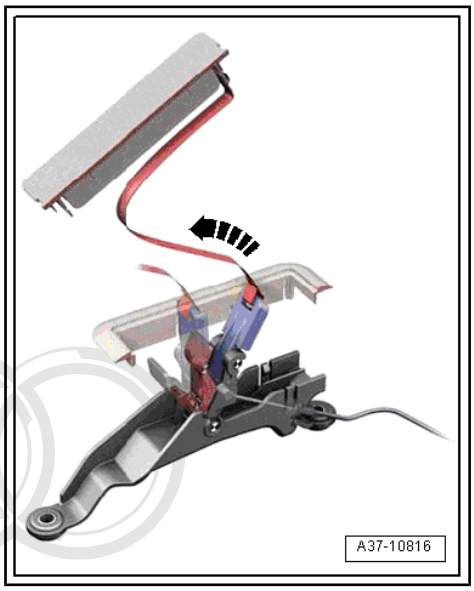

– Fold back top part of release lever -arrow- to avoid damage to components of release mechanism.

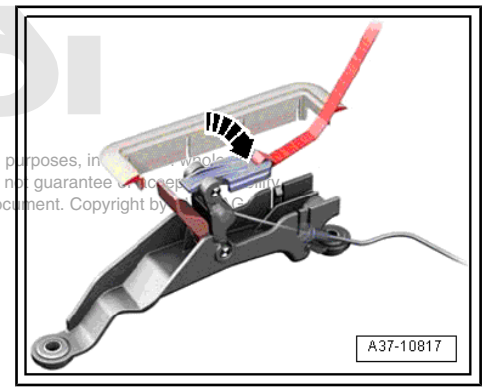

Note

- *When the parking lock has been released manually, a warning lamp (yellow gear symbol) and selector lever position N will light up in the instrument cluster.*
- *The following message will also appear:* `Vehicle may roll! Cannot shift to P. Please apply parking brake.`

Protected by copyright. Copying for private or commercial purposes, in part or in whole, is not permitted unless authorised by AUDI AG. AUDI AG does not guarantee or accept any liability with respect to the correctness of information in this document. Copyright by AUDI AG.

Reactivating parking lock

– Fold up top part of release lever again.

– Operate catch and push release lever back to its original position -arrow- until it engages audibly.

– Refit cover.

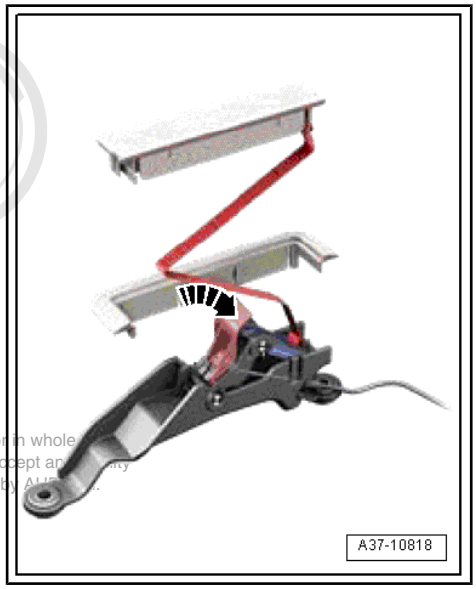

Note

When the parking lock is engaged, the instrument cluster and the selector lever position display - Y26- should show the position P.

Protected by copyright. Copying for private or commercial purposes, in part or in whole, is not permitted unless authorised by AUDI AG. AUDI AG does not guarantee or accept any liability with respect to the correctness of information in this document. Copyright by AUDI AG.

1.5 Removing and installing selector lever handle

Special tools and workshop equipment required

♦ Torque wrench - V.A.G 1410-

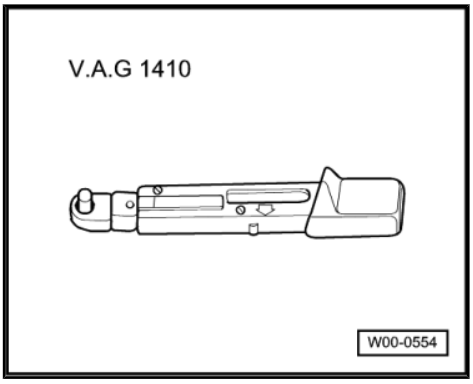

Removing

– Ignition switched off.

– Ignition key withdrawn (vehicles with ignition key).

– Wait until illumination of selector lever position display - Y26- , -2- goes out.

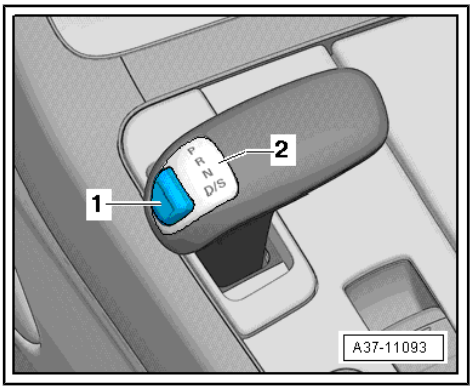

– Pull off selector lever handle (top section) -1- upwards.

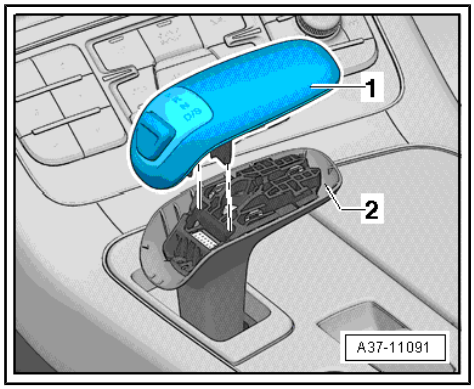

– Remove bolt -1-.

– Pull off selector lever handle (bottom section) -2- upwards.

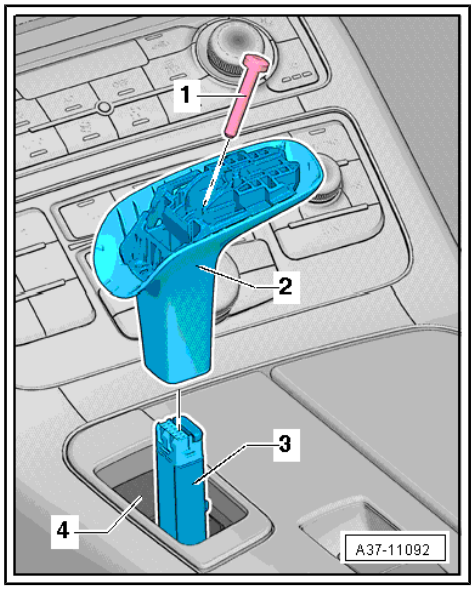

Installing

Installation is carried out in reverse sequence; note the following:

– Fit selector lever handle (bottom section) -2- onto selector lever -3-.

Note

- *Take care not to damage sliding cover -4-.*
- *If the selector lever handle (bottom section) -2- cannot be fitted fully onto the selector lever -3-, it may be necessary to realign the sliding cover -4- slightly. When doing this, do not move the selector lever.*
- *Bolt -1- cannot be installed if the selector lever handle (bottom section) -2- is not fully fitted.*

– Screw in bolt -1- (⇒ Item 5 (page 20)).

– Check that the 3 retaining clips -1- on the underside of the selector lever handle (top section) are correctly seated; press down further if necessary.

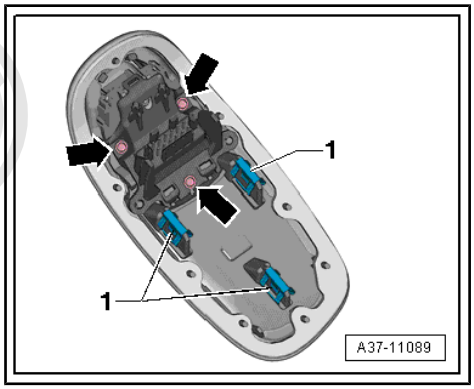

Protected by copyright. Copying for private or commercial purposes, in part or in whole, is not permitted unless authorised by AUDI AG. AUDI AG does not guarantee or accept any liability with respect to the correctness of information in this document. Copyright by AUDI AG.

– Press selector lever handle (top section) -1- onto selector lever handle (bottom section) -2-.

– Check selector mechanism ⇒ page 22 .

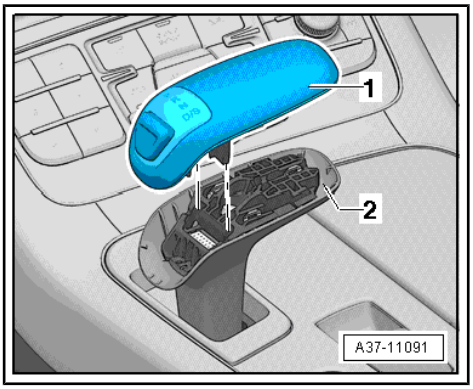

Tightening torques

♦ ⇒ “1.1 Exploded view - selector mechanism”, page 19

1.6 Removing and installing selector mechanism

Special tools and workshop equipment required

♦ Torque wrench - V.A.G 1410-

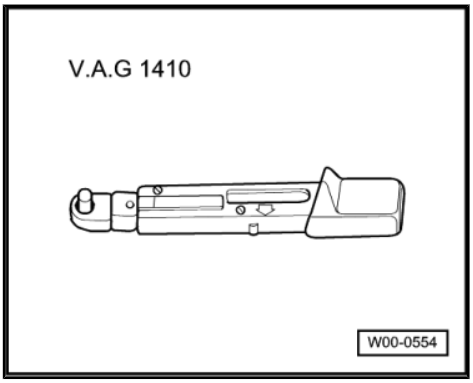

Protected by copyright. Copying for private or commercial purposes, in part or in whole, is not permitted unless authorised by AUDI AG. AUDI AG does not guarantee or accept any liability with respect to the correctness of information in this document. Copyright by AUDI AG.

Removing

– Remove centre console ⇒ General body repairs, interior; Rep. gr. 68 ; Centre console; Removing and installing centre console .

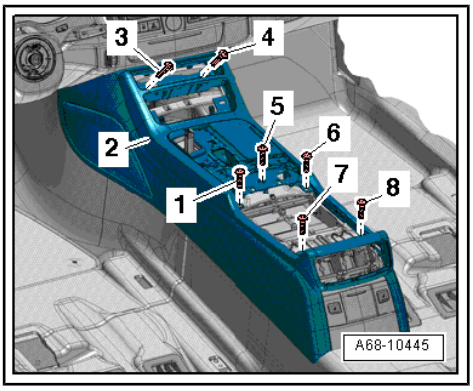

– Unplug electrical connector -1-.

– Remove bolts -arrows- and detach selector mechanism.

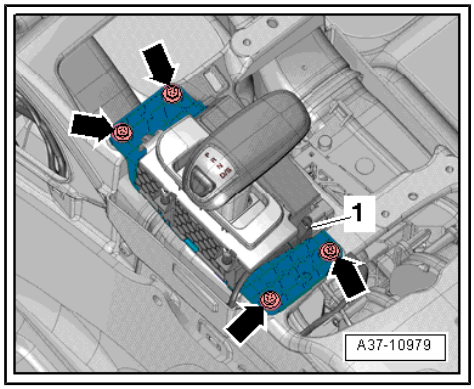

Installing

Installation is carried out in reverse sequence; note the following:

– Fit the two centring pins on rear side of shift unit in holes in base plate of centre consoles.

Note

- *The two centring pins are located between the bolt holes at the front and rear.*
- *The centring pins align the shift unit, and thus the selector lever handle, correctly in relation to the centre console.*

– Tighten bolts -arrows-.

– Attach electrical connector -1-.

– Install centre console ⇒ General body repairs, interior; Rep. gr. 68 ; Centre console; Removing and installing centre console .

– Check selector mechanism ⇒ page 22 .

Tightening torques

- ⇒ “1.1 Exploded view - selector mechanism”, page 19

Protected by copyright. Copying for private or commercial purposes, in part or in whole, is not permitted unless authorised by AUDI AG. AUDI AG does not guarantee or accept any liability with respect to the correctness of information in this document. Copyright by AUDI AG.

1.7 Dismantling and assembling selector mechanism

⇒ “1.7.1 Removing and installing button for selector lever release E681 and selector lever position display Y26 ”, page 32

⇒ “1.7.2 Removing and installing selector lever sensors control unit J587 with selector lever position sender G727 ”, page 34

1.7.1 Removing and installing button for selector lever release - E681- and selector lever position display - Y26-

Special tools and workshop equipment required

- TORX® bit, size T6
- Commercially available torque wrench for a torque of 0.25 Nm, e.g. Stahlwille, No. 775/12 (torque range 0.2 - 1.2 Nm)

Removing

– Ignition switched off.

– Ignition key withdrawn (vehicles with ignition key).

– Wait until illumination of selector lever position display - Y26- , -2- goes out.

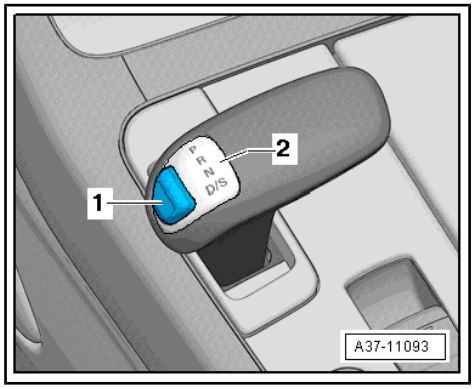

Note

The button for selector lever release - E681- and the selector lever position display - Y26- form a single unit -1- and can only be renewed together.

– Pull off selector lever handle (top section) -1- upwards.

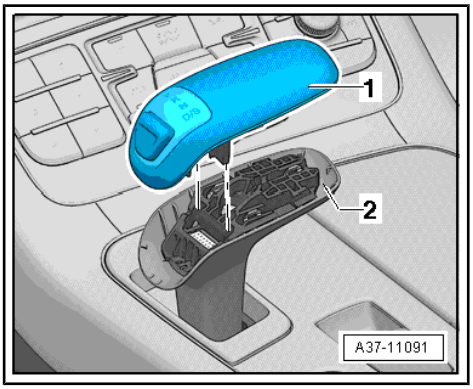

– Remove 3 bolts -arrows- on underside of selector lever handle (top section).

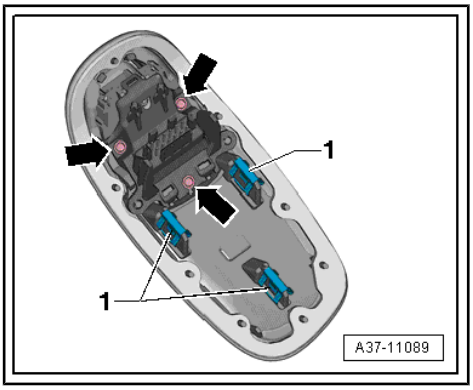

– Carefully release retaining lugs and detach button for selector lever release - E681- and selector lever position display - Y26- -3-.

– Carefully release retaining lugs and detach cover -1-.

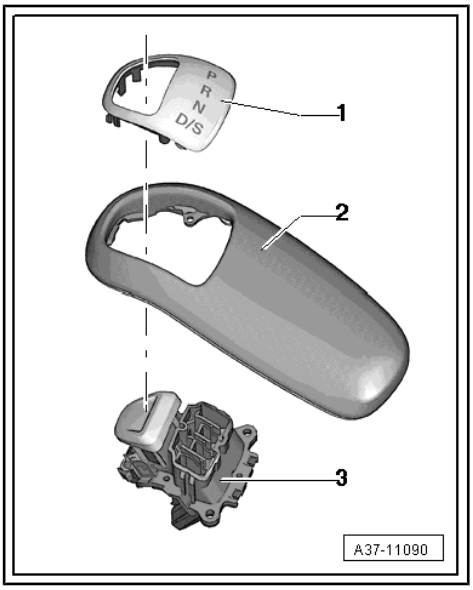

Installing

Installation is carried out in reverse sequence; note the following:

– Clip button for selector lever release - E681- and selector lever position display - Y26- -3- into selector lever handle (top section) -2-.

– Clip on cover -1-.

Protected by copyright. Copying for private or commercial purposes, in part or in whole, is not permitted unless authorised by AUDI AG. AUDI AG does not guarantee or accept any liability with respect to the correctness of information in this document. Copyright by AUDI AG.

– Carefully screw in 3 bolts -arrows-.

Caution

Risk of damage to components.

- *The 3 bolts have a very low tightening torque* *(⇒ Item 4 (page 20)).*

– Check that the 3 retaining clips -1- on the underside of the selector lever handle (top section) are correctly seated; press down further if necessary.

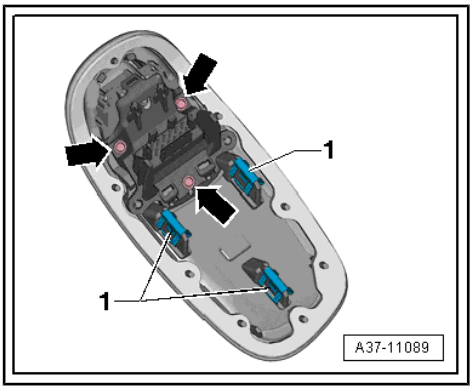

– Press selector lever handle (top section) -1- onto selector lever handle (bottom section) -2-.

– Check selector mechanism ⇒ page 22 .

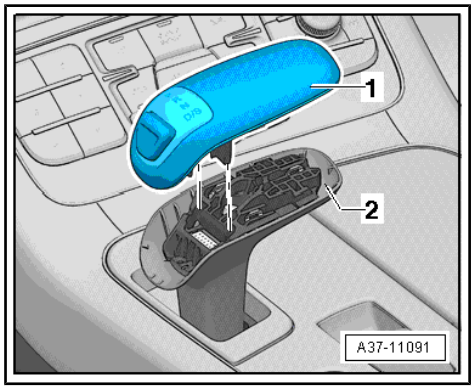

Tightening torques

♦ ⇒ “1.1 Exploded view - selector mechanism”, page 19

1.7.2 Removing and installing selector lever sensors control unit - J587- with selector lever position sender - G727-

Special tools and workshop equipment required

♦ Torque screwdriver - V.A.G 1624-

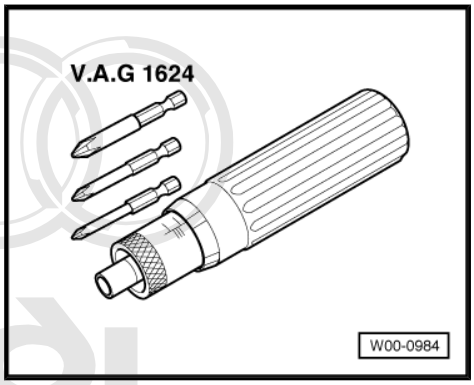

♦ ESD workplace - VAS 6613-

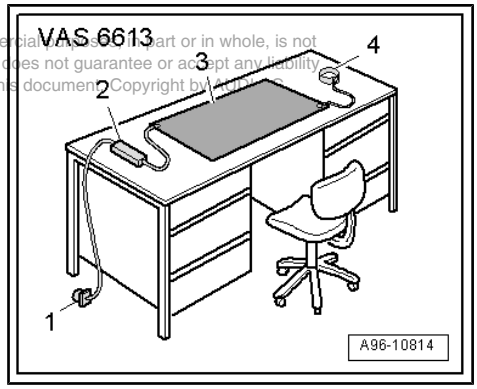

Protected by copyright. Copying for private or commercial purposes, in part or in whole, is not permitted unless authorised by AUDI AG. AUDI AG does not guarantee or accept any liability with respect to the correctness of information in this document. Copyright by AUDI AG.

♦ Locating pin : is supplied with replacement selector lever sensors control unit - J587-

♦ Drill bit (∅ 3 mm) if locating pin is not available

♦ Silicone lubricant - G 052 547 A2-

Removing

– Remove shift unit ⇒ page 31 .

Caution

Electrical components of selector mechanism can be irreparably damaged by electrostatic discharge.

- *Do not touch connector contacts with bare hands.*
- *After removal, the selector mechanism must be dismantled on an ESD workplace - VAS 6613- .*
- *Observe instructions for ESD workplace - VAS 6613- ⇒ Electrical system; General information; Rep. gr. 97 .*

– Place shift unit on ESD workplace - VAS 6613- .

Note

The selector lever sensors control unit - J587- and the selector lever position sender - G727- form a single unit -1- and can only be renewed together.

Copyright. Copying for private or commercial purposes, in part or in whole, is not permitted unless authorised by AUDI AG. AUDI AG does not guarantee or accept any liability with respect to the correctness of information in this document. Copyright by AUDI AG.

– Remove bolts -arrows-.

– Detach selector lever sensors control unit - J587- -1-

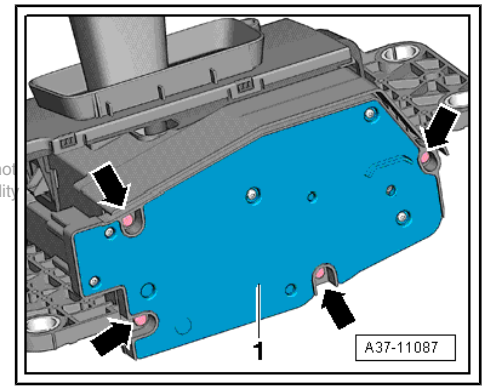

Installing

Installation is carried out in reverse sequence; note the following:

– Position guide plate -A- of sender segment on rear of selector lever sensors control unit - J587- by hand so it is in line with arrow -B-.

– In this position, insert locating pin -2- in aperture -C- on front of selector lever sensors control unit - J587- .

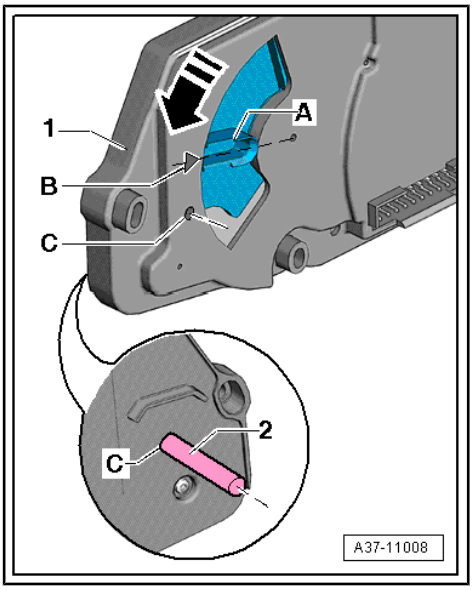

Note

- *If the locating pin -2- is not available, a drill bit (∅ 3 mm) can be used in its place. Insert the shank of the drill bit (∅ 3 mm) in aperture -C-.*
- *The sender segment for the selector lever position sender - G727- will always be pressed against the stop under spring pressure.*

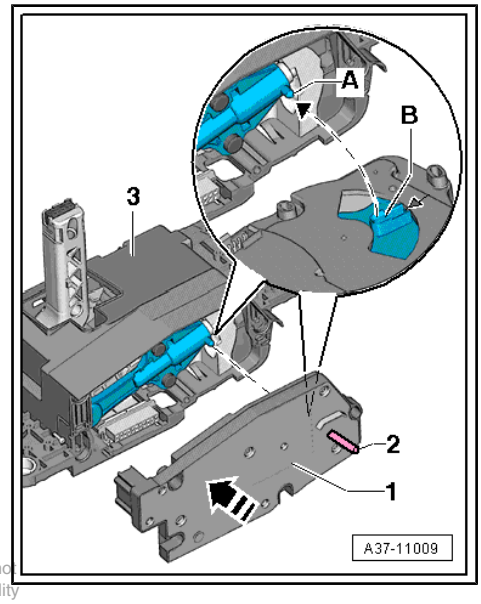

Note

The locating pin -2- holds guide plate -B- of the sender segment in position at actuator -A- of the detent lever when installing the selector lever sensors control unit - J587- .

– Lightly grease actuator -A- of detent lever and guide plate -B- of sender segment with silicone lubricant - G 052 547 A2- .

– Fit selector lever sensors control unit - J587- -1-, with locating pin -2- inserted, onto shift unit.

• The actuator -A- of the detent lever must engage in the guide plate -B- of the sender segment.

WARNING

Risk of malfunction of selector mechanism.

- *If the guide plate -B- is damaged, the selector lever sensors control unit - J587- must be renewed together with the selector lever position sender - G727- .*
- *If the actuator -A- of the detent lever is damaged, the shift unit must be renewed.*

Protected by copyright. Copying for private or commercial purposes, in part or in whole, is not permitted unless authorised by AUDI AG. No liability is accepted for the accuracy of the contents of this document. Not any liability

Caution

Risk of malfunction of selector mechanism.

- *It is important to keep exactly to the specified tightening sequence and tightening torque for the four bolts* *⇒ page 21* .
- *The bolts can come loose if they are not installed exactly according to instructions. This will result in malfunctions of the selector lever sensors control unit - J587- .*

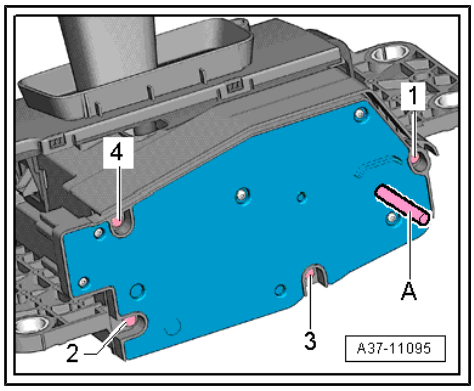

– Screw in bolts in the sequence -1 to 4-.

– Remove locating pin -A-.

– Install shift unit ⇒ page 31 .

– Check selector mechanism ⇒ page 22 .

Tightening torques

♦ ⇒ “1.1 Exploded view - selector mechanism”, page 19

1.8 Removing and installing manual release cable for parking lock

⇒ "1.8.1 Removing and installing manual release cable (front) for parking lock", page 37

⇒ "1.8.2 Removing and installing manual release cable (rear) for parking lock", page 38

1.8.1 Removing and installing manual release cable (front) for parking lock

Removing

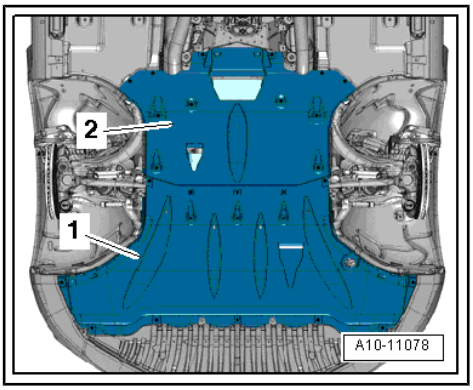

> ⚠ WARNING
>
> *Accident risk; vehicle can start rolling.*
>
> ♦ *Pull up parking brake button to apply electromechanical parking brake.*

– Remove rear noise insulation -2- ⇒ General body repairs, exterior; Rep. gr. 66 ; Noise insulation; Removing and installing noise insulation .

– Release catches -arrows A- and move sleeve -1- on manual release cable in direction of -arrow B-.

– Disengage manual release cable (rear) from manual release cable (front) -arrow C-.

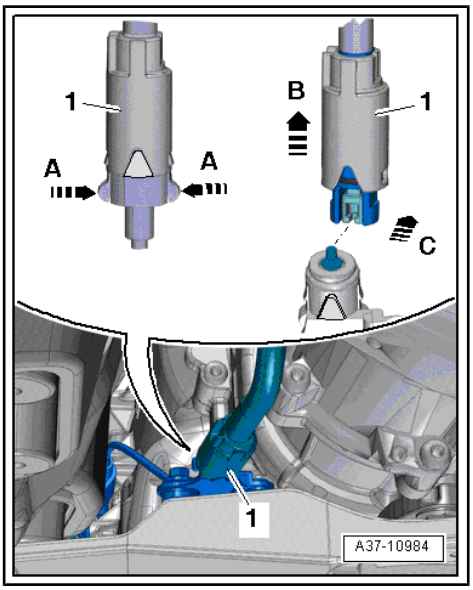

Protected by copyright. Copying for private or commercial purposes, in part or in whole, is not permitted unless authorised by AUDI AG. AUDI AG does not guarantee or accept any liability with respect to the correctness of information in this document. Copyright by AUDI AG.

– Remove bolts -2- and -3-, guide manual release cable (front) out of gearbox selector lever -1- for manual release mechanism and detach cable.

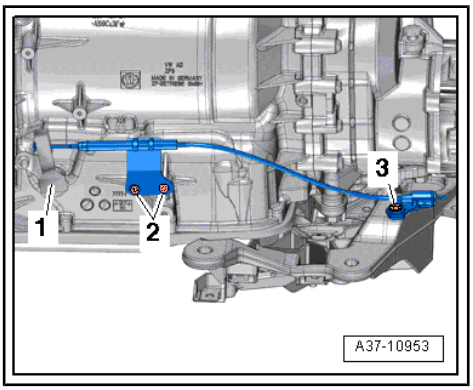

Installing

Installation is carried out in reverse sequence; note the following:

– When installing, make sure that distance -a- is maintained between manual release cable -1- and lever -2-.

• Dimension -a- = 2 mm (minimum)

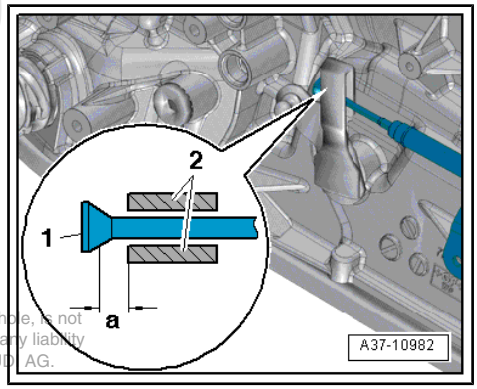

Protected by copyright. Copying for private or commercial purposes, in part or in whole, is not permitted unless authorised by AUDI AG. AUDI AG does not guarantee or accept any liability with respect to the correctness of information in this document. Copyright by AUDI AG.

– Engage manual release cable (rear) -2- from above on manual release cable (front) -1- -arrow A-

– Push on sleeve -3- until it engages -arrow B-.

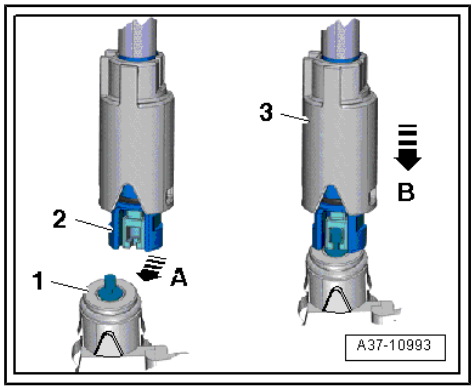

> ⚠ **Caution**
>
> *Check that sleeve is seated securely.*

– Check manual release mechanism for parking lock ⇒ page 27 .

Tightening torques

♦ ⇒ “1.2 Exploded view - manual release mechanism for parking lock”, page 21

1.8.2 Removing and installing manual release cable (rear) for parking lock

Removing

> ⚠ **WARNING**
>
> *Accident risk; vehicle can start rolling.*
>
> ♦ *Pull up parking brake button to apply electromechanical parking brake.*

– Remove propshaft ⇒ Final drive; Rep. gr. 39 ; Propshaft; Removing and installing propshaft .

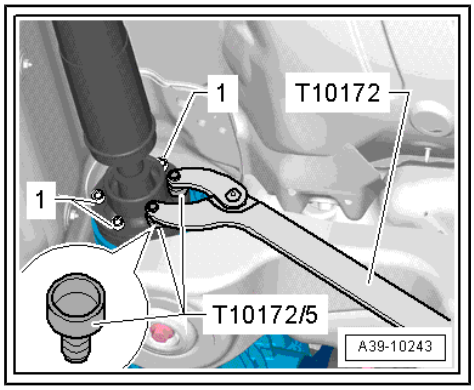

– Remove front silencers (left and right) ⇒ Rep. gr. 26 ; Exhaust pipes/silencers; Exploded view - silencers .

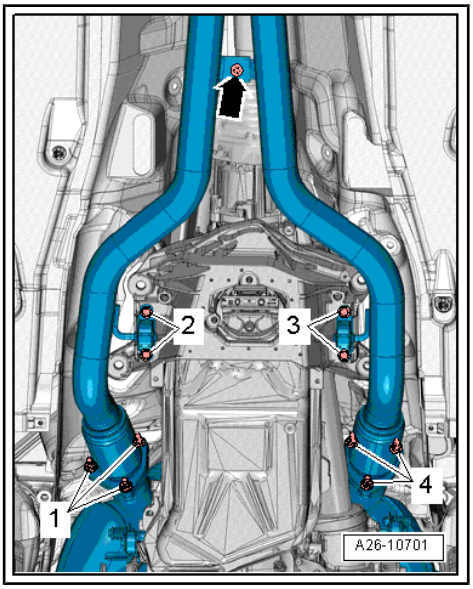

– Release catches -arrows A- and move sleeve -1- on manual release cable in direction of -arrow B-.

– Disengage manual release cable (rear) from manual release cable (front) -arrow C-.

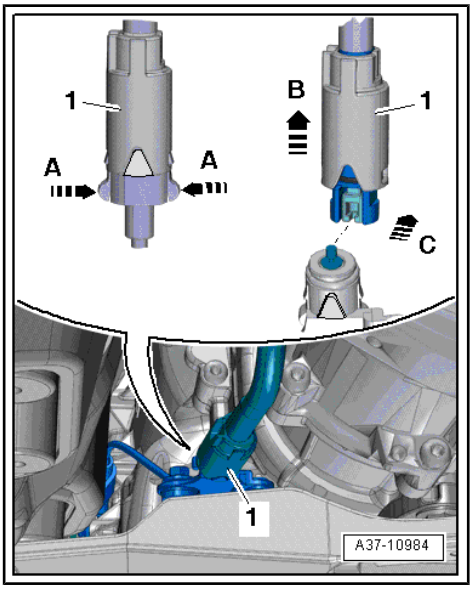

Protected by copyright. Copying for private or commercial purposes, in part or in whole, is not permitted unless authorised by AUDI AG. AUDI AG does not guarantee or accept any liability with respect to the correctness of information in this document. Copyright by AUDI AG.

– Disengage manual release cable (rear) -2- from retainer -3-.

– Remove heat shield -1- for centre tunnel ⇒ General body repairs, exterior; Rep. gr. 66 ; Strips / trim panels / extensions; Exploded view - heat shield .

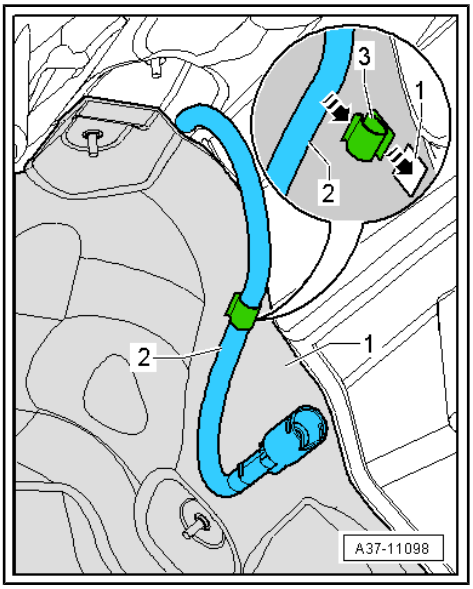

– Disengage manual release cable (rear) -3- from retainer -2-.

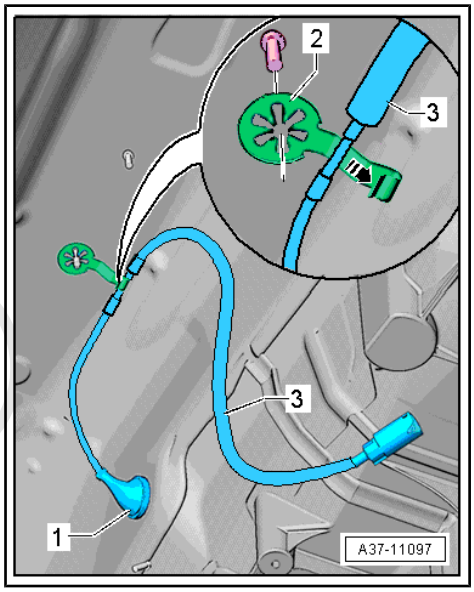

– Remove driver's seat ⇒ General body repairs, interior; Rep. gr. 72 ; Front seats; Removing and installing front seat .
– Remove floor mat.
– Remove front sill panel trim on driver's side ⇒ General body repairs, interior; Rep. gr. 70 ; Passenger compartment trim panels; Removing and installing sill panel trim .

Protected by copyright. Copying for private or commercial purposes, in part or in whole, is not permitted unless authorised by AUDI AG. AUDI AG does not guarantee or accept any liability with respect to the correctness of information in this document. Copyright by AUDI AG.

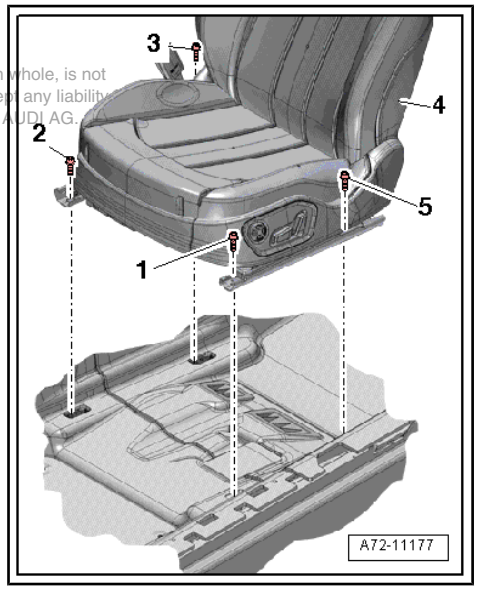

– Lever off cover -1- for manual release mechanism using a screwdriver and detach -arrows-.
– Push floor covering at front of driver's footwell to one side, and guide cover -1- for manual release mechanism through opening in floor covering.

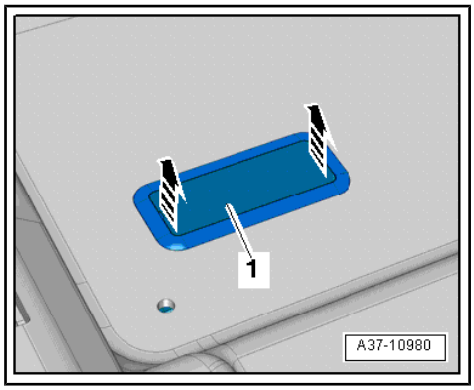

– Remove nuts -1- and -2-.
– Remove cable tie -A-.
– Pull out rubber grommet -4- inwards.
– Guide manual release cable (rear) -3- into interior through hole in centre tunnel (in opposite direction to arrow) and detach cable.

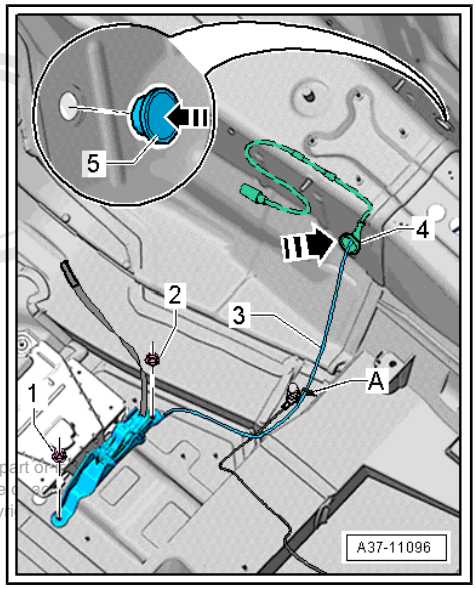

Protected by copyright. Copying for private or commercial purposes, in part or
permitted unless authorised by AUDI AG. AUDI AG does not guarantee
with respect to the correctness of information in this document. Copyri

Installing

Installation is carried out in reverse sequence; note the following:

– Guide manual release cable (rear) -3- in direction of arrow through hole in centre tunnel and route cable as shown in illustration.
– Secure manual release cable (rear) to earth point with cable tie -A-.
– Tighten nuts -1- and -2-.

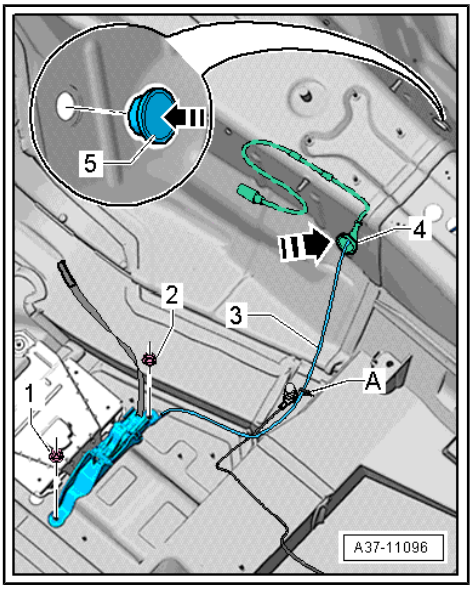

Note

Note the correct tightening torque, otherwise the studs can break off.

– Push rubber grommet -4- into hole in centre tunnel.
• The rubber grommet -4- and the rubber plug -5- on the opposite side of the centre tunnel must be installed correctly, otherwise water can enter the passenger compartment.

– Engage manual release cable (rear) -3- in retainer -2- -arrow-.
• The sealing lip of rubber grommet -1- must seal all round in the hole in the centre tunnel.

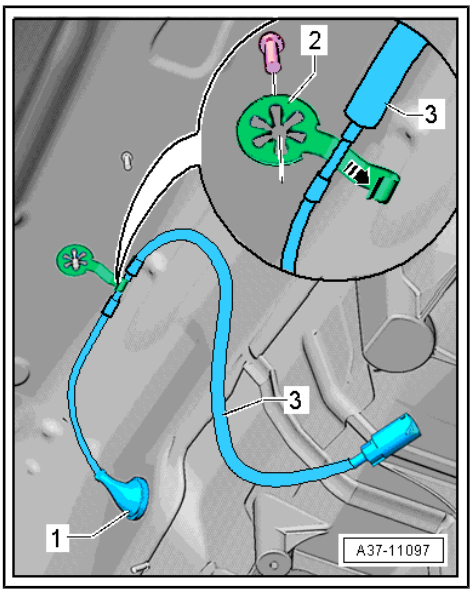

– Install heat shield -1- for centre tunnel ⇒ General body repairs, exterior; Rep. gr. 66 ; Strips / trim panels / extensions; Exploded view - heat shield .

– Engage manual release cable (rear) -2- in retainer -3- on heat shield -1- -arrow-, if necessary, attach retainer -3- to heat shield.

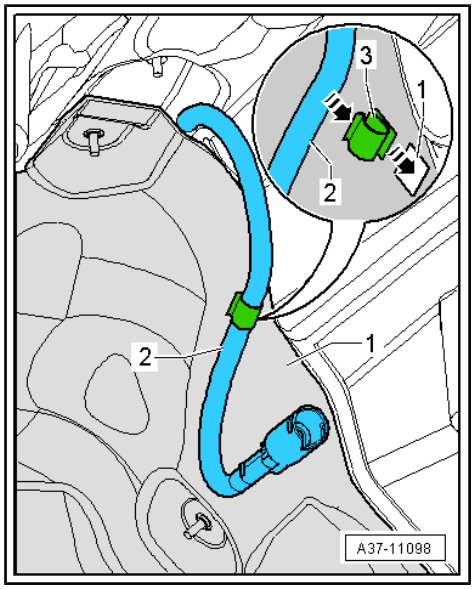

– Engage manual release cable (rear) -2- from above on manual release cable (front) -1- -arrow A-

– Push on sleeve -3- until it engages -arrow B- and check that it is securely seated.

– Install front sill panel trim ⇒ General body repairs, interior; Rep. gr. 70 ; Passenger compartment trim panels; Removing and installing sill panel trim .

– Install driver's seat ⇒ General body repairs, interior; Rep. gr. 72 ; Front seats; Removing and installing front seat .

– Install propshaft ⇒ Final drive; Rep. gr. 39 ; Propshaft; Removing and installing propshaft .

– Check manual release mechanism for parking lock ⇒ page 27 .

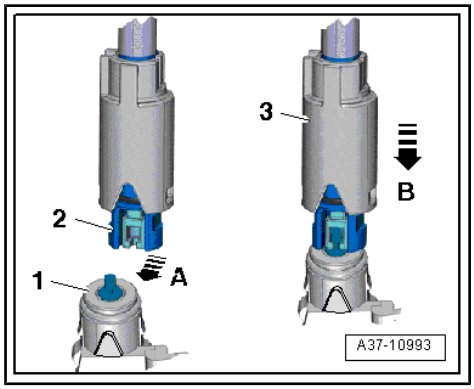

Tightening torques

♦ ⇒ “1.2 Exploded view - manual release mechanism for parking lock”, page 21 .

♦ ⇒ Rep. gr. 26 ; Exhaust pipes/silencers; Exploded view - silencers

1.9 Renewing selector shaft oil seal

Procedure

– Remove front exhaust pipe ⇒ Rep. gr. 26 ; Exhaust pipes/silencers; Exploded view - silencers .

– Remove ATF oil pan ⇒ page 85 .

– Remove ATF filter ⇒ page 70 .

– Remove mechatronic unit ⇒ page 89 .

Protected by copyright. Copying for private or commercial purposes, in part or in whole, is not permitted unless authorised by AUDI AG. AUDI AG does not guarantee or accept any liability with respect to the correctness of information in this document. Copyright by AUDI AG.

– Remove bolts -2- and guide manual release cable (front) out of gearbox selector lever for manual release of parking lock.

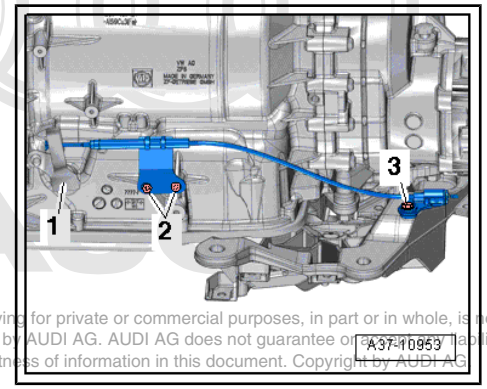

Note

-Item 3- can be disregarded.

Caution

Installation will be more difficult if the parking lock is engaged.

- ***The parking lock must not be engaged during the next steps. Turn the propshaft to check whether the parking lock is engaged.***
- ***Turn the rear splined shaft so that the parking lock is not engaged (operate manual release mechanism if necessary). Do not turn the propshaft from this point onwards.***

Protected by copyright. Copying for private or commercial purposes, in part or in whole, is not permitted unless authorised by AUDI AG. AUDI AG does not guarantee or assume any liability with respect to the correctness of information in this document. Copyright by AUDI AG

– Knock roll pin -2- out of shaft of gearbox selector lever using a suitable punch -1-.

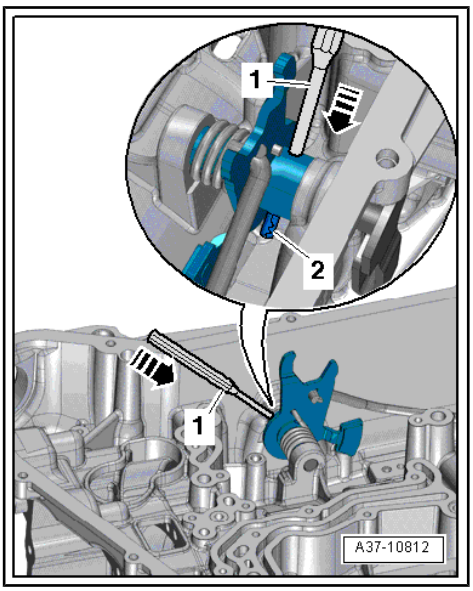

Note

The return spring is slackened when the gearbox selector lever for the parking lock manual release is removed.

– Pull off gearbox selector lever with shaft -arrow-.

– Pry out oil seal with small screwdriver.

– Lubricate outer circumference and space between sealing lips of new oil seal with ATF.

• Installation position: open side of oil seal points towards gearbox

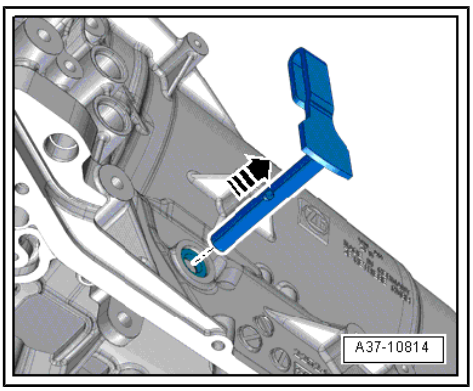

– Fit oil seal on gearbox housing and press in as far as stop -arrow- using a suitable socket.

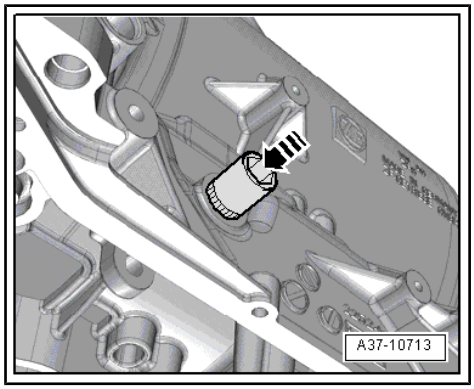

– Insert gearbox selector lever with shaft and at the same time engage return spring on stop lever and on gearbox housing -arrows-.

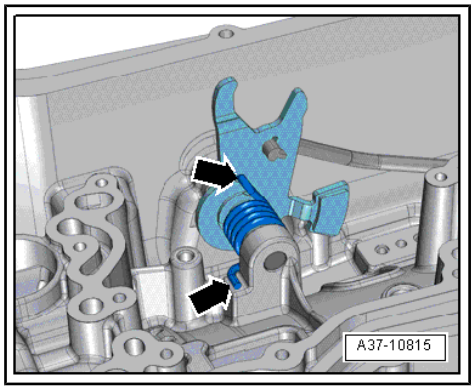

Note

If the operating rod for the locking pawl has slipped too far towards the rear, it can only be pulled forward again -arrow 1- if the locking pawl is pressed at the same time -arrow 2-.

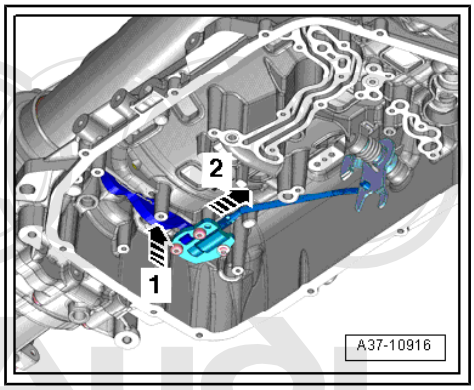

– Drive roll pin -2- into shaft of gearbox selector lever until flush using a suitable punch -1- .

– Install mechatronic unit ⇒ page 89 .

– Install ATF filter ⇒ page 70 .

– Install ATF oil pan ⇒ page 85 .

– Fill up with ATF ⇒ page 74 .

– Check manual release mechanism for parking lock ⇒ page 27 .

Protected by copyright. Copying for private or commercial purposes, in whole or in part, is not permitted unless authorised by AUDI AG. AUDI AG does not guarantee or accept any liability with respect to the correctness of information. Copyright by AUDI AG.

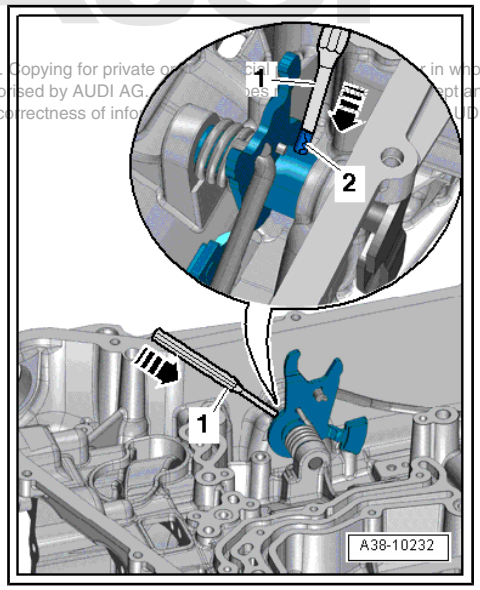

Tightening torques

♦ ⇒ Rep. gr. 26 ; Exhaust pipes/silencers; Exploded view - silencers

2 Removing and installing gearbox

⇒ “2.1 Removing gearbox”, page 45

⇒ “2.2 Installing gearbox”, page 54

⇒ “2.3 Tightening torques for gearbox”, page 59

2.1 Removing gearbox

Special tools and workshop equipment required

- Support bracket - 10 - 222 A-
- Engine and gearbox jack - V.A.G 1383 A-
- Engine bung set - VAS 6122-
- Adapter - T40058-
- Engine support supplement set - T40093- with adapters -T40093/5- , -T40093/7- and -T40093/8-
- Gearbox support - T40173-

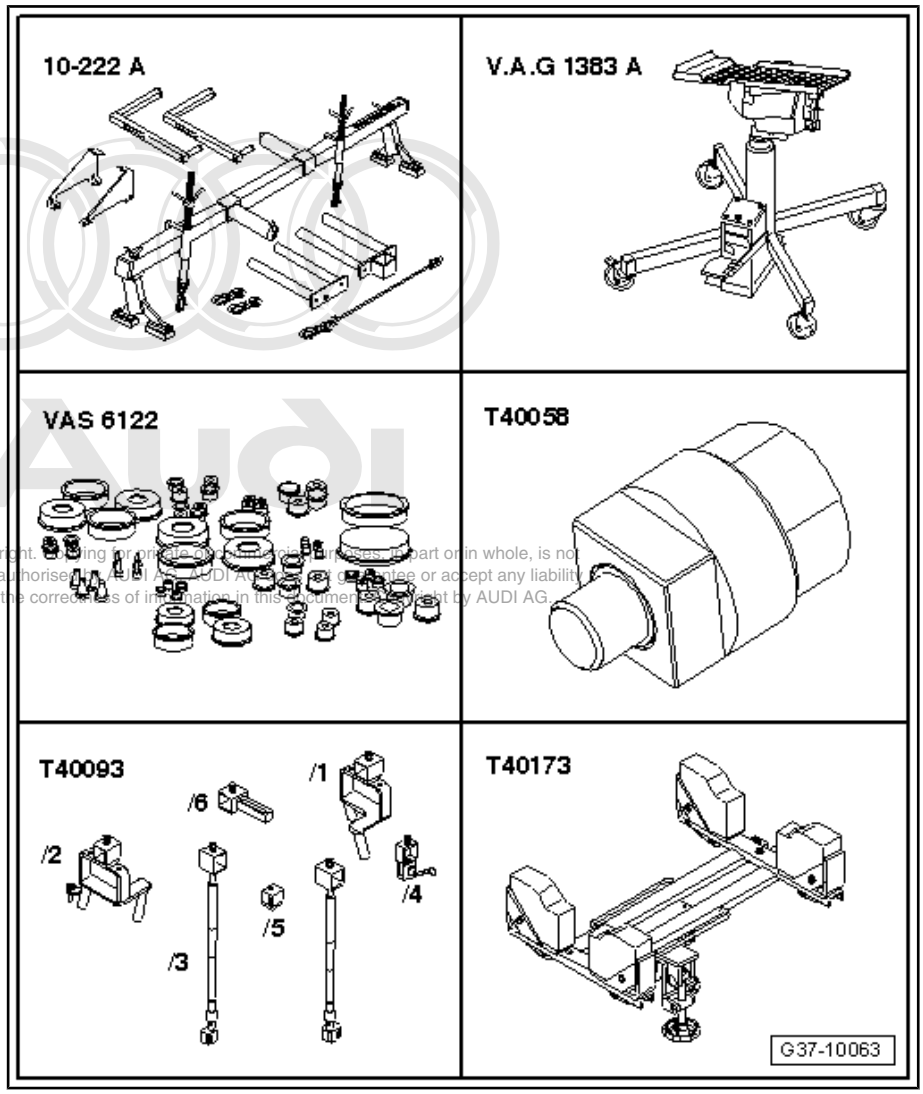

Protected by copyright. Copying for private or commercial purposes, in part or in whole, is not permitted unless authorised by AUDI AG. AUDI AG does not guarantee or accept any liability with respect to the correctness of information in this document. Copyright by AUDI AG.

WARNING

Before using the gearbox support - T40173- it is important to check that you have the correct version of this tool.

Older versions of this tool must not be used and must be replaced with the latest version.

Distinguishing features of latest version:

On the latest version of this tool, the parts shown in -red- in the illustration -arrows- have a yellow chromated finish.

If the support does not meet the specifications, proceed as follows:

- *Germany: Contact Matra to have the tool replaced.*
- *All countries except Germany: Contact your Importer to have the tool replaced.*

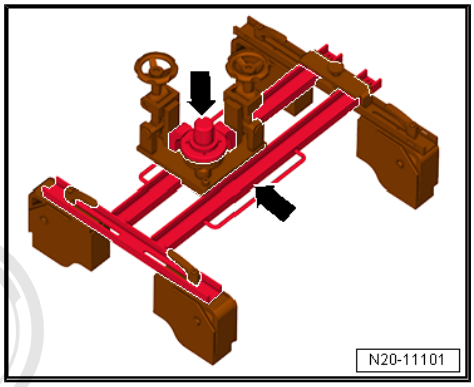

This document is copyright. Copying for private or commercial purposes, in part or in whole, is not permitted unless authorised by AUDI AG. AUDI AG does not guarantee or accept any liability with respect to the accuracy of the information in this document. Copyright by AUDI AG.

Preparing gearbox support - T40173- :

– Mounting block attached at -position 1- must be removed.

– Mounting block attached at -position 2- must be rotated so that the longer side faces upwards, as shown in illustration.

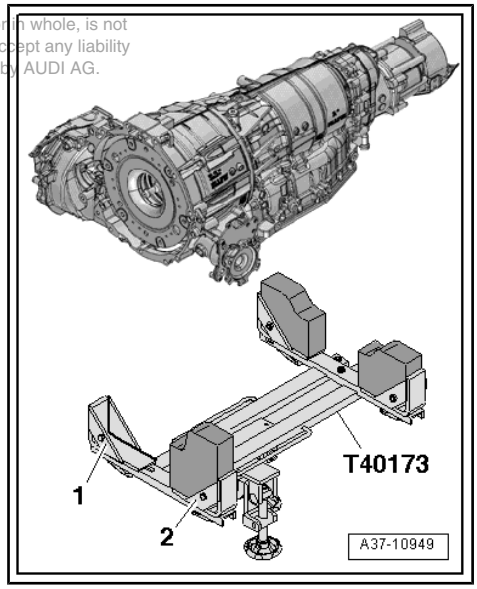

Removing

– Bring front wheels into straight-ahead position.

– Switch off ignition.

Caution

When disconnecting the battery there is a risk of serious damage to electronic components:

- *Observe the correct procedure for disconnecting the battery.*

– Disconnect battery ⇒ Electrical system; Rep. gr. 27 ; Battery; Disconnecting and connecting battery .

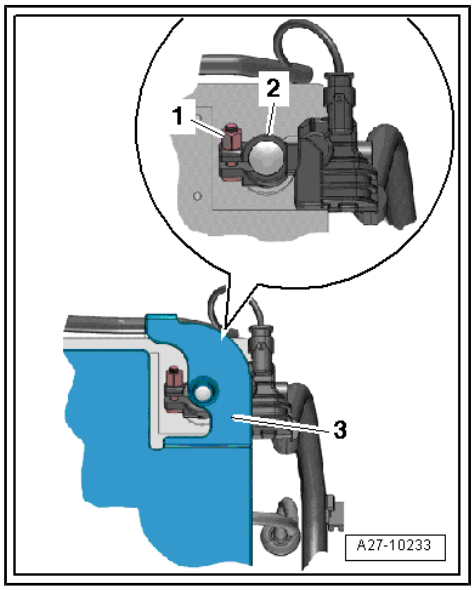

– Remove engine cover panel ⇒ Rep. gr. 10 ; Engine cover panel; Removing and installing engine cover panel .

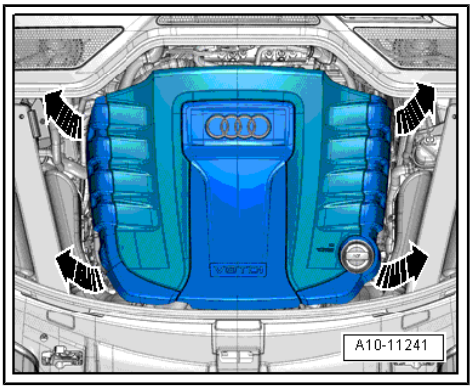

– Remove noise insulation -1- and -2- ⇒ General body repairs, exterior; Rep. gr. 66 ; Noise insulation; Removing and installing noise insulation .

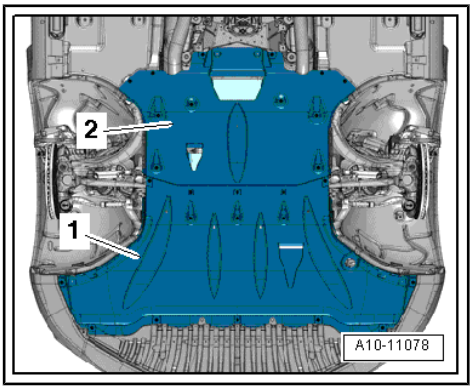

– Remove coolant pipe (rear left) ⇒ Rep. gr. 19 ; Coolant pipes; Removing and installing coolant pipes .

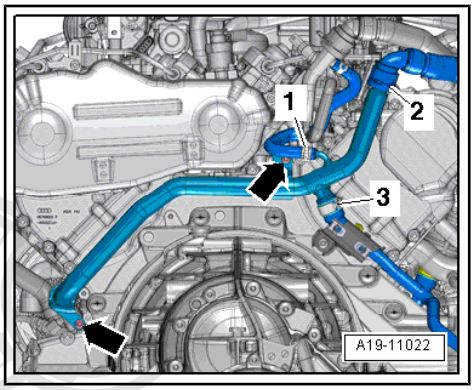

– Remove bolts -2 … 6- securing gearbox to engine (accessible from above).

– Tie up catalytic converters (left and right).

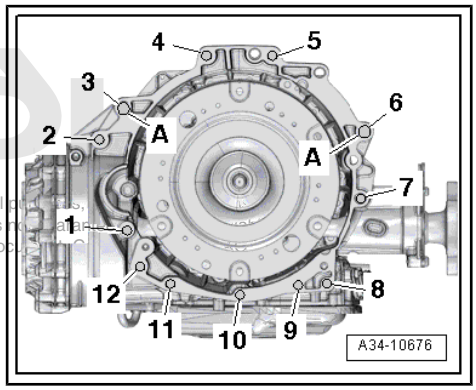

Protected by copyright. Copying for private or commercial purposes, permitted unless authorised by AUDI AG. AUDI AG does not guarantee with respect to the correctness of information in this document.

– Remove longitudinal member (top) -2- on both sides ⇒ General body repairs, exterior; Rep. gr. 50 ; Lock carrier; Exploded view - lock carrier .

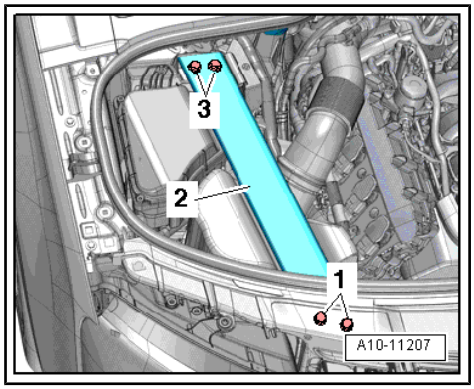

– Bolt adapters -T40093/7- and -T40093/8- to mounting points for brace on both sides.
– Secure support bracket - 10 - 222 A- with spindles -10 - 222 A /11- and adapters -T40093/5- to adapters -T40093/7- and -T40093/8- as shown in illustration.
– Attach spindles to engine lifting eyes (rear) and apply tension, but do not lift engine.

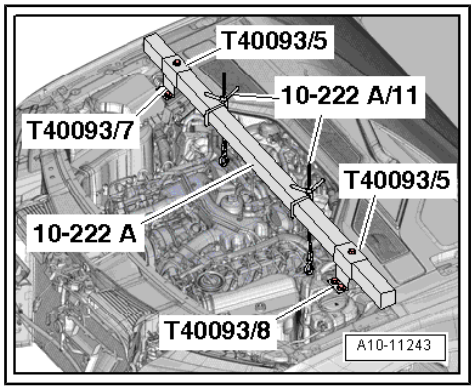

– Remove propshaft ⇒ Final drive; Rep. gr. 39 ; Propshaft; Removing and installing propshaft .
– Remove gearbox mounting (right-side) ⇒ Rep. gr. 10 ; Assembly mountings; Removing and installing gearbox mounting .
– Remove ATF cooler ⇒ page 69 .

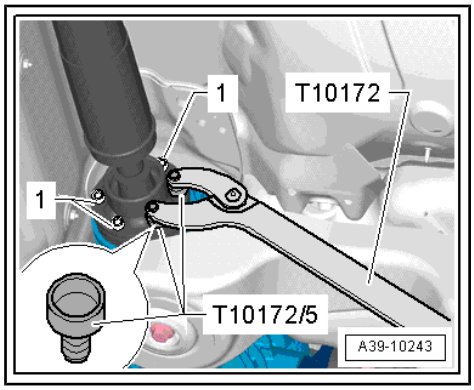

– Take electrical connector -2- for gearbox mounting valve 2 - N263- out of bracket and unplug.
– Remove bolt -3- and detach brace.

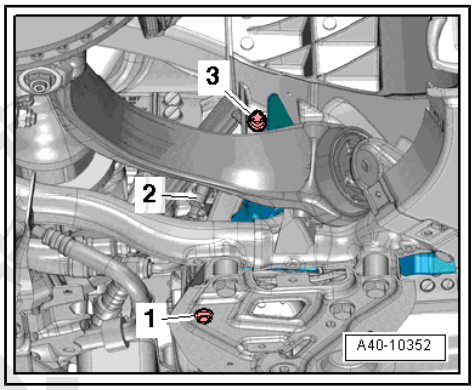

Note

-Item 1- can be disregarded.

Protected by copyright. Copying for private or commercial purposes, in part or in whole, is not permitted unless authorised by AUDI AG. AUDI AG does not guarantee or accept any liability with respect to the correctness of information in this document. Copyright by AUDI AG.

– Remove bolts -arrows- and detach heat shield -1-.

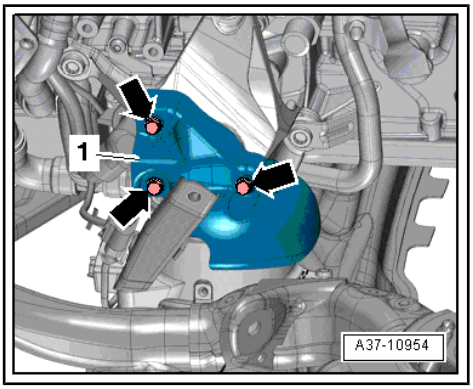

– Remove bolt -1- on bracket for hydraulic line.
– Remove bolts -arrows- and remove gearbox mounting (left-side) with gearbox support.

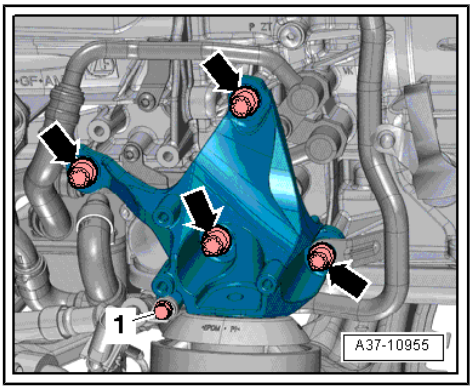

Note

Place a cloth below to catch escaping ATF.

– Remove bolts -arrows- and detach ATF line -1- from gearbox.
– Seal off open lines and connections with clean plugs from engine bung set - VAS 6122- .

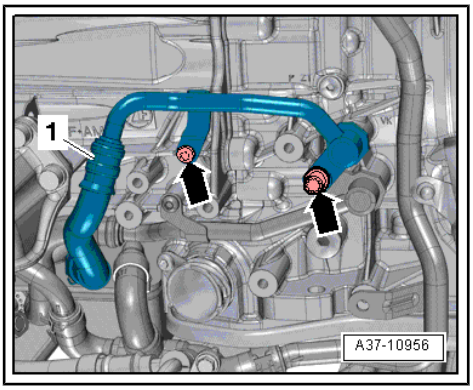

Caution

The gearbox control unit (mechatronic unit) can be damaged by electrostatic discharge.

- ***Do not touch contact pins in gearbox connector with bare hands.***

Protected by copyright. Copying for private or commercial purposes, in part or in whole, is not permitted unless authorised by AUDI AG. AUDI AG does not guarantee or accept any liability with respect to the correctness of information in this document. Copyright by AUDI AG.

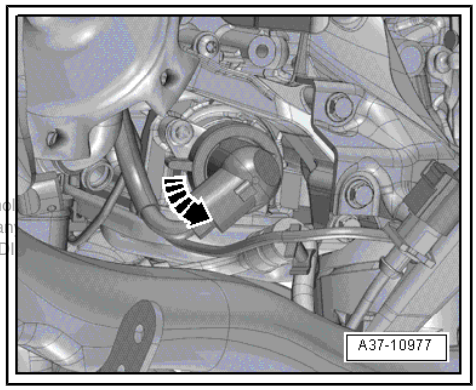

– Touch gearbox housing with your hand (without gloves) to discharge any static electricity.
– Turn fastener anti-clockwise -arrow- and unplug electrical connector on gearbox.
– Move wiring harness clear on gearbox.

– Release hose clip -2- and detach coolant hose.

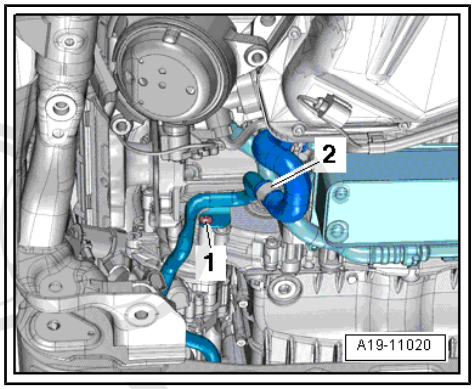

Note

-Item 1- can be disregarded.

– Remove bolts -arrows- and detach heat shield for drive shaft (right-side).

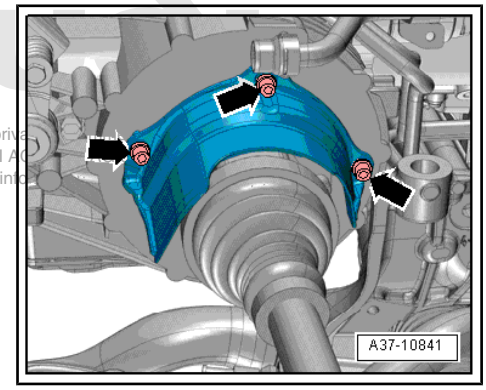

Protected by copyright. Copying for priv
permitted unless authorised by AUDI A
with respect to the correctness of int

– Remove bolts -arrows- and detach heat shield for drive shaft (left-side).

– Unbolt drive shafts (left and right) from flange shafts of gearbox ⇒ Running gear, axles, steering; Rep. gr. 40 ; Drive shaft; Removing and installing drive shaft .

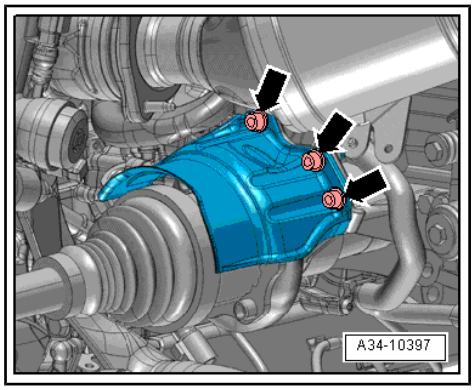

– Detach intermediate steering shaft from steering rack and telescope shaft upwards ⇒ Running gear, axles, steering; Rep. gr. 48 ; Steering column; Removing and installing intermediate steering shaft .

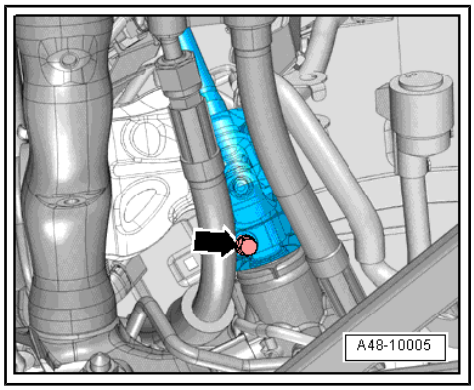

Vehicles from model year 2014 onwards:

– Unplug electrical connector -1- for vehicle signals (CAN bus and terminal 15) from power steering control unit - J500- (to do this, release retainer and press down release catch).

– Unplug electrical connector -2- for supply voltage (terminal 30) from power steering control unit - J500- (to do this, release retainer -arrow- and press down release catch).

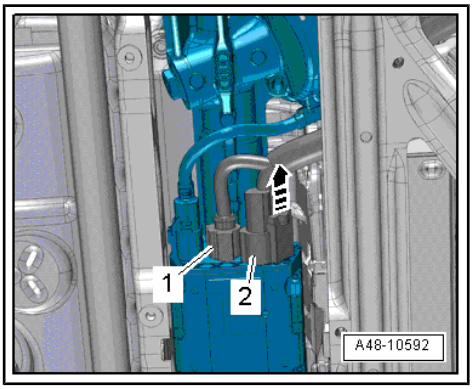

Continued for all vehicles:

– Unplug electrical connectors -2- for engine speed sender - G28- and move wiring clear.

Note

-Item 1- can be disregarded.

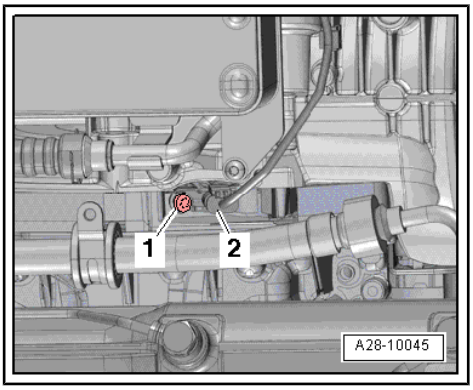

– Release catches -arrows A- and move sleeve -1- on manual release cable in direction of -arrow B-.

– Disengage manual release cable (rear) from manual release cable (front) -arrow C-.

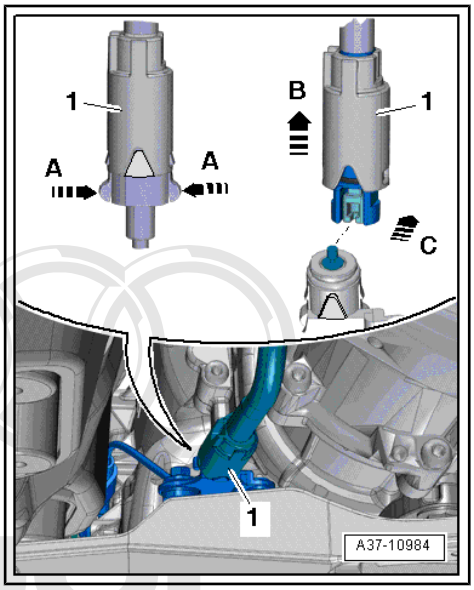

– Pull cover -1- off bottom of gearbox -arrow-.

Protected by copyright. Copying for private or commercial purposes, in whole or in part, is not permitted unless authorised by AUDI AG. AUDI AG does not guarantee or accept any liability with respect to the correctness of information in this document. Copyright by AUDI AG.

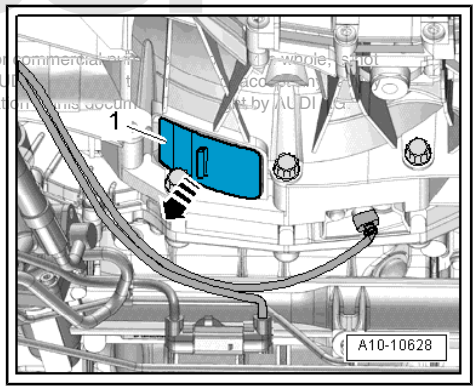

– Remove bolts -2- and push coolant pipe (rear) slightly forwards.

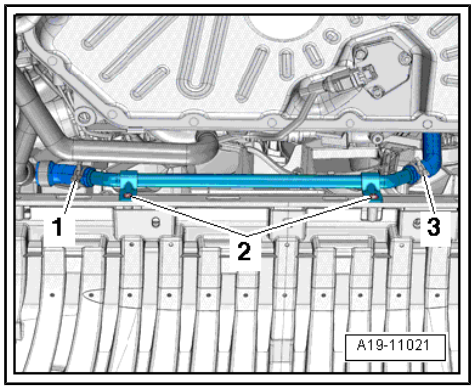

Note

-Items 1 and 3- can be disregarded.

– Insert guide stud of adapter -T40058- as follows:

- The larger diameter -arrow 1- faces engine.
- The smaller diameter -arrow 2- faces adapter.

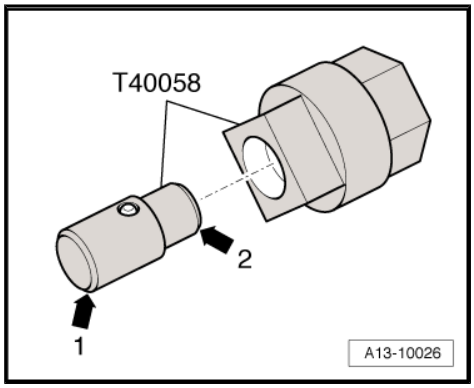

– To slacken bolts securing torque converter to drive plate, counterhold crankshaft with adapter - T40058- .

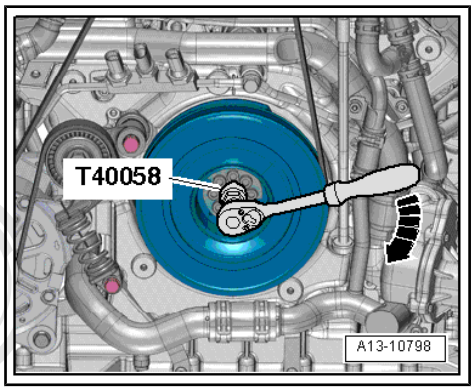

Note

When you then turn the crankshaft, only turn crankshaft in direction of engine rotation -arrow-.

– Remove 6 bolts -arrow- for torque converter (turn crankshaft 60° in direction of engine rotation each time).

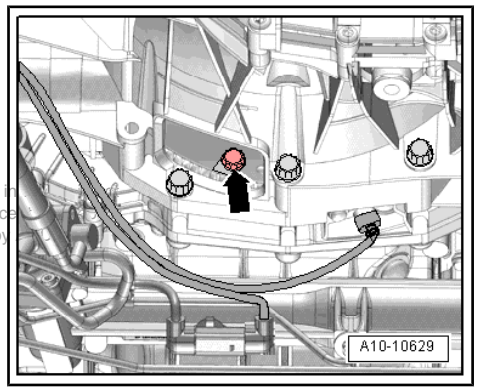

Protected by copyright. Copying for private or commercial purposes, in part or i
permitted unless authorised by AUDI AG. AUDI AG does not guarantee or acc
with respect to the correctness of information in this document. Copyright by

– Remove bolt -1- for starter.
– Detach starter from gearbox but do not remove starter.
– Remove remaining engine/gearbox securing bolts -6 … 12-; leave bolt -7- screwed in hand-tight.

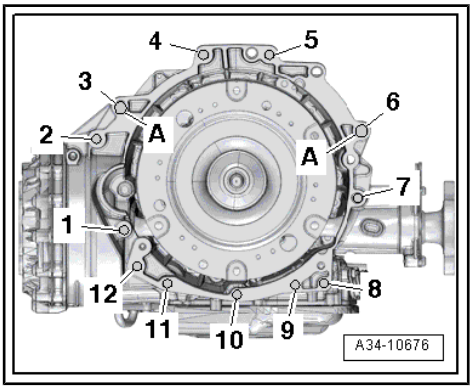

Caution

Risk of leaks on ATF oil pan.

♦ *Do not apply gearbox support - T40173- at ATF oil pan.*

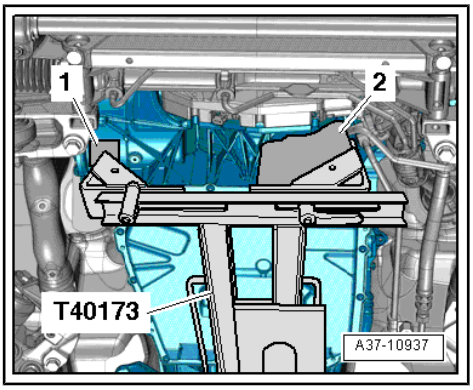

– Position engine and gearbox jack - V.A.G 1383 A- with gearbox support - T40173- (already prepared) underneath gearbox.
– Gearbox support must be positioned as follows at front of gearbox:

- On left side of gearbox, mounting block -2- engages in opening for dual-mass flywheel on gearbox housing.
- On right side of gearbox, gearbox support is applied to differential housing. Place flat rubber block -1- between the two to protect housing.

– Use tensioning strap -1- to secure gearbox.

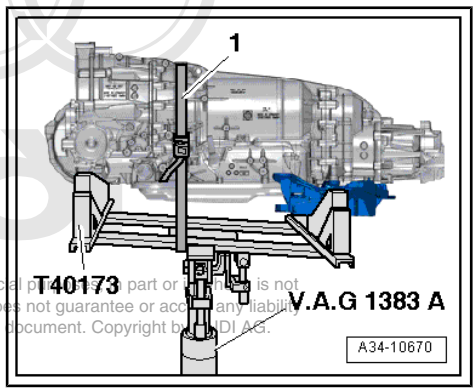

Protected by copyright. Copying for private or commercial purposes, in part or in whole, is not permitted unless authorised by AUDI AG. AUDI AG does not guarantee or accept any liability with respect to the correctness of information in this document. Copyright by AUDI AG.

Note

For illustration purposes, the gearbox support - T40173- is not shown.

– Remove bolts -arrows- for tunnel cross member.

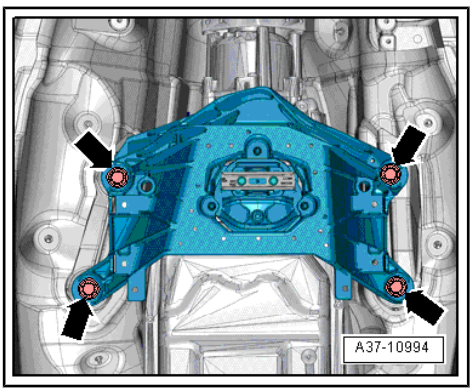

– Remove the last bolt securing the gearbox to the engine.
– Detach gearbox from engine and lower carefully using engine and gearbox jack - V.A.G 1383 A- .

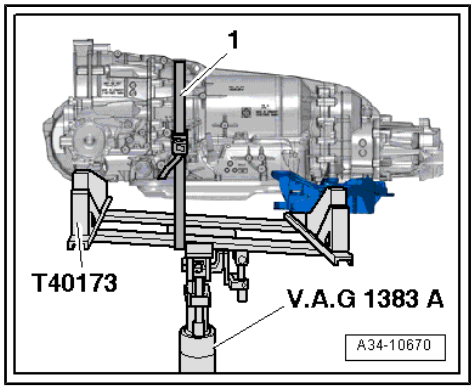

2.2 Installing gearbox

Special tools and workshop equipment required

♦ Ring spanner insert, 16 mm - V.A.G 1332/14-

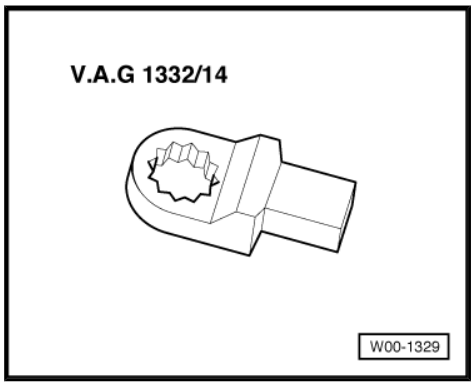

♦ Transportation lock - T40170-

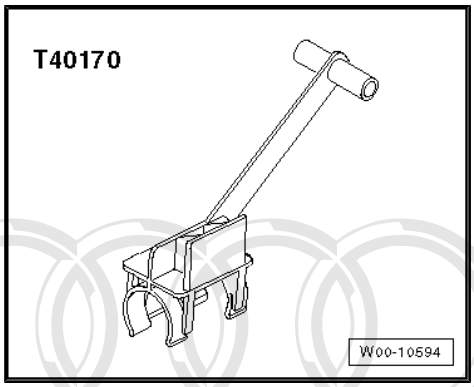

Procedure

Note

♦ *Renew bolts which are tightened by turning through a specified angle.*
♦ *Renew self-locking nuts and bolts, and seals, O-rings and gaskets.*
♦ *Secure all hose connections with the correct hose clips (as original equipment); refer to ⇒ Electronic parts catalogue .*
♦ *Re-attach all cable ties at the same locations when re-installing.*

Protected by copyright. Copying for private or commercial purposes, in part or in whole, is not permitted unless authorised by AUDI AG. AUDI AG does not guarantee or accept any liability with respect to the correctness of information in this document. Copyright by AUDI AG.

Tightening torques for installing gearbox ⇒ page 59

- Before fitting a replacement gearbox, always blow through the ATF cooler and ATF lines with compressed air (not more than 10 bar) ⇒ page 72 .
- Before installing, it is important to clean any residue from threads in cylinder block using a tap.
- When fitting a replacement gearbox: attach gearbox support, gearbox mounting and tunnel cross member to new gearbox ⇒ page 61 .
- Position gearbox on gearbox support - T40173- and secure with tensioning strap -1-, as shown in illustration.

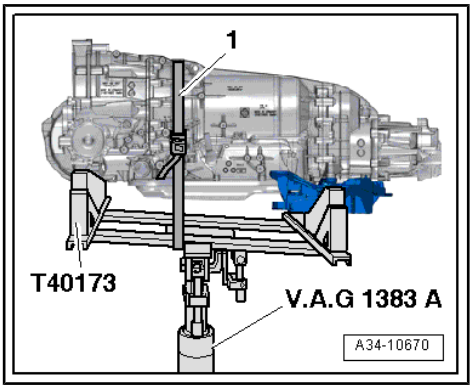

Caution

Drive lugs on ATF pump can be damaged if torque converter is not fitted correctly.

- *Checking position of torque converter* *⇒ page 14*

- The following preparations must be made before joining the engine and gearbox:
- Turn torque converter until hole is visible next to notch -arrow- in recess in bottom of gearbox housing, as shown in illustration.

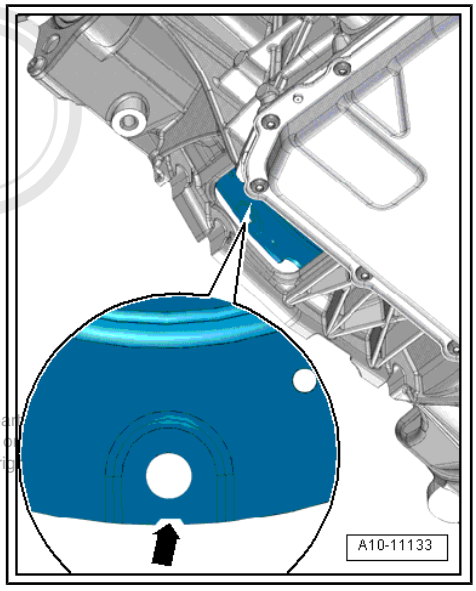

Note

There is only one notch at the periphery; turn the torque converter accordingly.

Protected by copyright. Copying for private or commercial purposes, in part
permitted unless authorised by AUDI AG. AUDI AG does not guarantee or
with respect to the correctness of information in this document. Copyright

– Insert transportation lock - T40170- into gearbox housing from below and clamp onto flange shaft -1-.

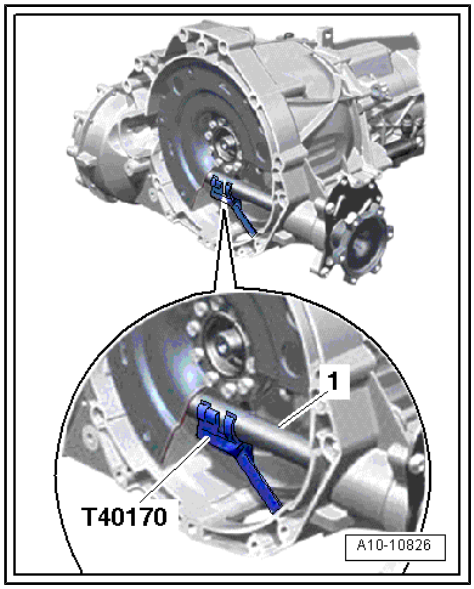

– Check that dowel sleeves -A- for centralising engine/gearbox are in the cylinder block; install any missing dowel sleeves.

– Check whether aluminium bolts for engine/gearbox connection can be reused and mark bolts if necessary ⇒ page 60 .

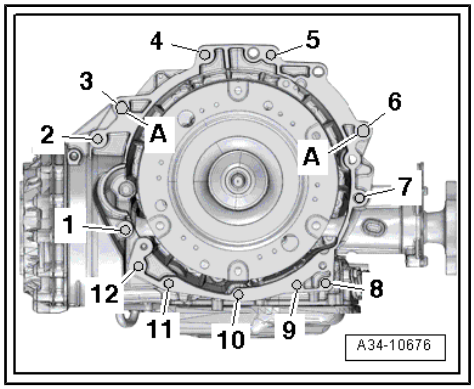

– Coat end seal -1- with lubricant before fitting.

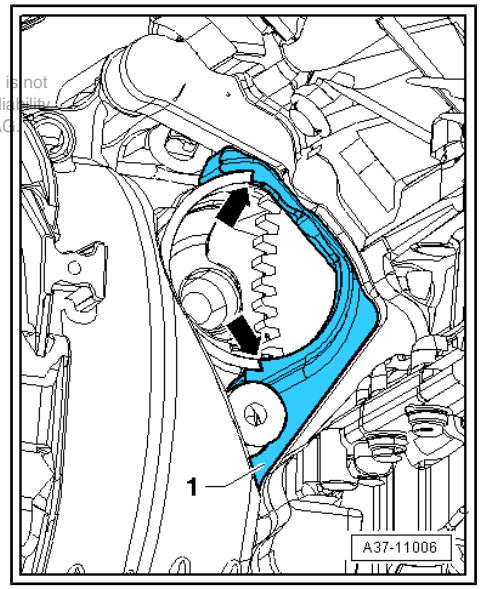

Protected by copyright. Copying for private or commercial purposes, in part or in whole, is not permitted unless authorised by AUDI AG. AUDI AG does not guarantee or accept any liability with respect to the correctness of information in this document. Copyright by AUDI AG

– Bring starter -1- and end seal -2- into installation position. To do so, use plastic/rubber wedge -4- to position starter in installation position while supporting starter on engine support -3-.

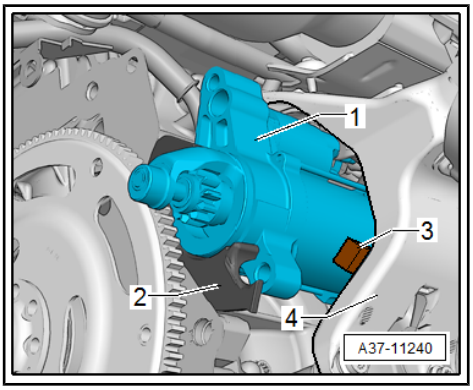

Note

It is important to ensure that the end seal is in the correct installation position relative to the starter, as otherwise the securing bolts for the starter would be difficult to fit and the sealing function of the end seal would not be assured.

– Join gearbox with engine and tighten bolts -6 ... 12-.

– Tighten starter using bolts -1-, making sure that end seal is in correct position.

– Remove transportation lock - T40170- .

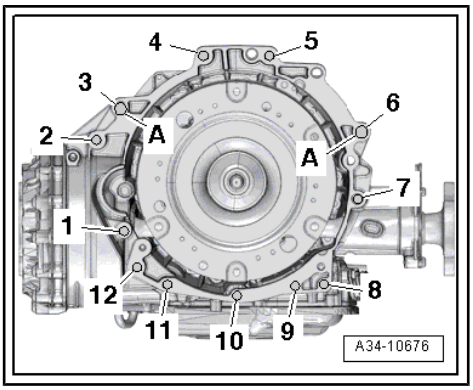

– Raise gearbox and tighten bolts -arrows- for tunnel cross member ⇒ page 61 .

– Slacken tensioning strap and move engine and gearbox jack - V.A.G 1383 A- with gearbox support - T40173- out from underneath gearbox.

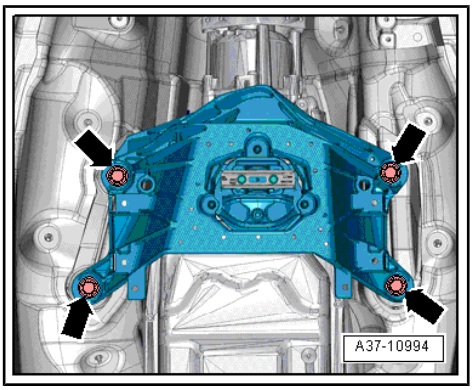

Note

The following step is necessary to ensure that the torque converter makes even and proper contact on the drive plate and does not cant.

– Press torque converter -2- slightly against drive plate -3- in direction of -arrow- using lever -1-.

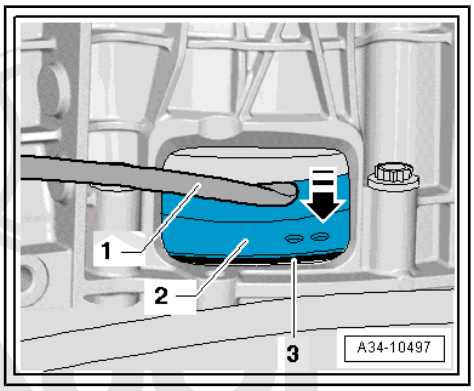

Protected by copyright. Copying for private or commercial purposes, in part or in whole, is not permitted unless authorised by AUDI AG. AUDI AG does not guarantee or accept any liability with respect to the correctness of information in this document. Copyright by AUDI AG.

– Secure torque converter to drive plate as follows:

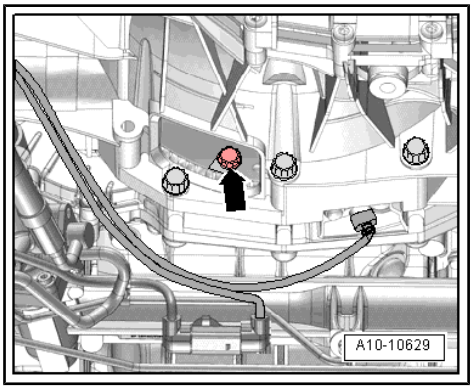

Note

Use ring spanner insert, 16 mm - V.A.G 1332/14- to tighten bolts.

– Install first bolt -arrow- and tighten hand-tight (2 Nm).

– Turn crankshaft 180° in direction of engine rotation -arrow- with adapter - T40058- .

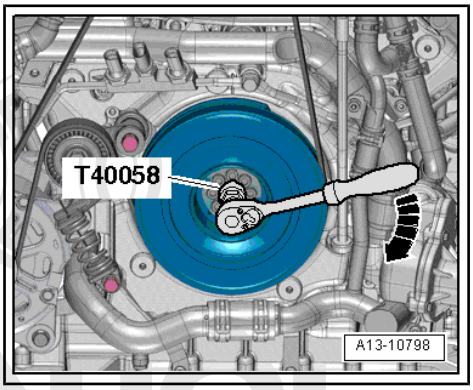

– Tighten bolt -arrow- accessible in this crankshaft position.

– Turn crankshaft 60° further each time and tighten remaining five bolts.

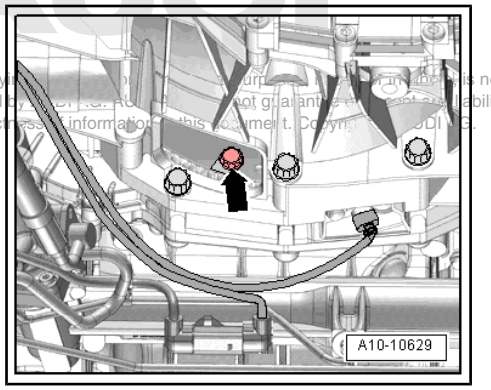

Protected by copyright. Copy[illegible] is not permitted unless authorised [illegible] not guarantee [illegible] liability with respect to the correctness [illegible] information [illegible] this document. Copy[illegible] AUDI AG.

– Tighten remaining bolts -2 ... 5-.

The remaining installation steps are carried out in reverse sequence; note the following:

– Install manual release cable for parking lock ⇒ page 37 .

– Secure intermediate steering shaft to steering rack ⇒ Running gear, axles, steering; Rep. gr. 48 ; Steering column; Removing and installing intermediate steering shaft .

– Install ATF lines and ATF cooler ⇒ page 67 .

– Install drive shafts and heat shield ⇒ Running gear, axles, steering; Rep. gr. 40 ; Drive shaft; Exploded view - drive shaft .

– Install gearbox mounting (both sides) ⇒ Rep. gr. 10 ; Assembly mountings; Exploded view - assembly mountings .

– Install propshaft ⇒ Final drive; Rep. gr. 39 ; Propshaft; Removing and installing propshaft .

– Install longitudinal member (top) ⇒ General body repairs, exterior; Rep. gr. 50 ; Lock carrier; Exploded view - lock carrier .

– Install rear coolant pipe ⇒ Rep. gr. 19 ; Coolant pipes; Removing and installing coolant pipes .

– Observe measures required after connecting battery ⇒ Electrical system; Rep. gr. 27 ; Battery; Disconnecting and connecting battery .

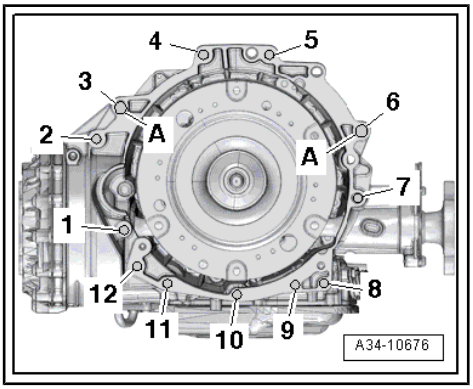

Caution

Overvoltage can cause irreparable damage to control units.

- *Do not use charger for boost starting.*

– Check manual release mechanism for parking lock ⇒ page 27 .

– Check ATF level and top up as required ⇒ page 74 .

2.3 Tightening torques for gearbox

Note

- *Tightening torques apply only to lightly greased, oiled, phosphated or black-finished nuts and bolts.*
- *Additional lubricant such as engine or gear oil may be used, but do not use graphite lubricant.*
- *Do not use parts which have been degreased.*
- *Tolerance for tightening torques is ± 15 %.*

Other tightening torques:

Component		Nm
Bolts and nuts	M6	9
	M7	15
	M8	20
	M10	40
	M12	65

Protected by copyright. Copying for private or commercial purposes, in part or in whole, is not permitted unless authorised by AUDI AG. AUDI AG does not guarantee or accept any liability with respect to the correctness of information in this document. Copyright by AUDI AG.

Torque converter ⇒ Item 5 (page 14)

Engine/gearbox securing bolts

Item	Bolt	Nm
1	M10x50 1)	65
2 … 6	M12x100 2)	30 + 90°
7	M12x175 3)4)	30 + 90°
8, 11, 12	M10x60 2)	15 + 90°
9	M10x75 2)	15 + 90°
10	M10x95 2)	15 + 90°
A	Dowel sleeves for centralising	

- 1) Property class 10.9. The steel bolt can be re-used any number of times.
- 2) Aluminium bolts must not be used more than twice ⇒ page 60 .
- 3) Vehicles up to model year 2013: Always renew aluminium bolt after removing. Also secures power steering pump.
- 4) Vehicles from model year 2014 onwards: Aluminium bolts can be used twice only ⇒ page 60 . Nut with locking mechanism as counter bolted connection.

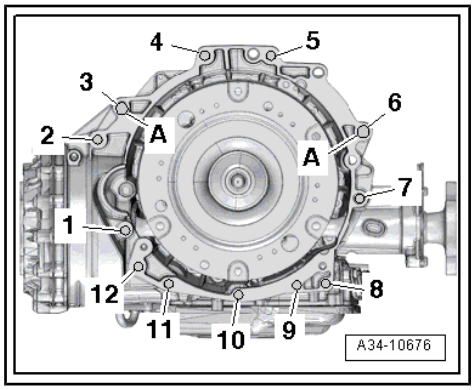

- Aluminium bolts -2 … 6- and -8 ... 12- must not be used more than twice. After they have been used once, an “X” -arrow- must therefore be chiselled onto the bolts.
- To prevent damage to the bolts, they must not be clamped in a vice when marking them. Clamp a 14 mm socket with 1/2" drive in the vice instead, and insert the bolt into the socket, as shown in illustration.
- Bolts marked with an “X” must not be used again.

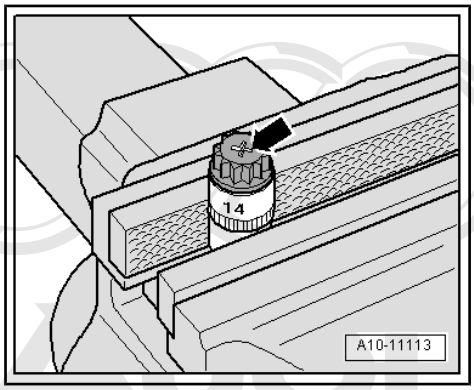

Protected by copyright. Copying for private or commercial purposes, in part or in whole, is not permitted unless authorised by AUDI AG. AUDI AG does not guarantee or accept any liability with respect to the correctness of information in this document. Copyright by AUDI AG.

3 Assembly mountings

⇒ "3.1 Exploded view - assembly mountings", page 61

⇒ "3.2 Removing and installing tunnel cross member", page 62

3.1 Exploded view - assembly mountings

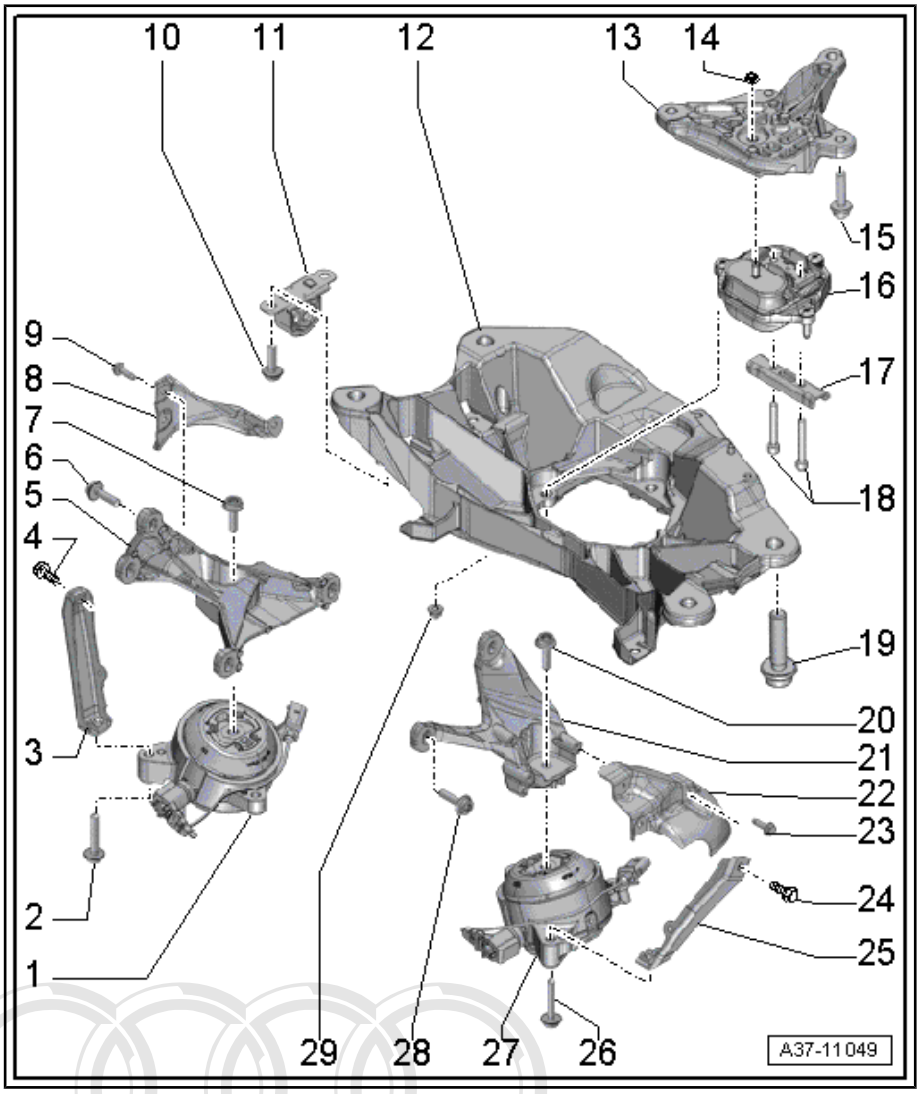

1 - Gearbox mounting (right-side)

- ❑ With gearbox mounting valve 1 - N262-
- ❑ Removing and installing ⇒ Rep. gr. 10 ; Assembly mountings; Removing and installing gearbox mounting

2 - Bolt

- ❑ 20 Nm

3 - Brace

4 - Bolt

- ❑ 20 Nm

5 - Gearbox support (right-side)

6 - Bolt

- ❑ 20 Nm

7 - Bolt

- ❑ 20 Nm

8 - Heat shield

9 - Bolt

- ❑ 10 Nm

10 - Bolt

- ❑ Tightening torque ⇒ Rep. gr. 26 ; Exhaust pipes/silencers; Exploded view - silencers

11 - Mounting

- ❑ For exhaust system

12 - Tunnel cross member

- ❑ Removing and installing ⇒ page 62

13 - Gearbox support (rear)

- ❑ Removing and installing ⇒ Rep. gr. 10 ; Assembly mountings; Removing and installing gearbox mounting

14 - Nut

- ❑ Only remove if gearbox mounting has to be detached from gearbox support
- ❑ 20 Nm

15 - Bolt

- ❑ 40 Nm

Protected by copyright. Copying for private or commercial purposes, in part or in whole, is not permitted unless authorised by AUDI AG. AUDI AG does not guarantee or accept any liability with respect to the correctness of information in this document. Copyright by AUDI AG.

16 - Gearbox mounting (rear)

- ❑ Removing and installing ⇒ Rep. gr. 10 ; Assembly mountings; Removing and installing gearbox mounting

17 - Stop (bottom)

- ❑ For gearbox mounting (rear)

18 - Bolts

- ❑ Only remove if gearbox mounting has to be detached from gearbox support
- ❑ Renew
- ❑ 20 Nm + 90°

19 - Bolt

- ❑ M10x55 8.8: 40 Nm
- ❑ M10x40 10.9: 70 Nm

20 - Bolt

- ❑ 40 Nm

21 - Gearbox support (left-side):

22 - Heat shield

23 - Bolt

- ❑ 10 Nm

24 - Bolt

- ❑ 20 Nm

25 - Brace

26 - Bolt

- ❑ 20 Nm

27 - Gearbox mounting (left-side)

- ❑ With gearbox mounting valve 2 - N263-
- ❑ Removing and installing ⇒ Rep. gr. 10 ; Assembly mountings; Removing and installing gearbox mounting

28 - Bolt

- ❑ 20 Nm

29 - Nut

- ❑ 20 Nm

3.2 Removing and installing tunnel cross member

Protected by copyright. Copying for private or commercial purposes, in part or in whole, is not permitted unless authorized by AUDI AG. AUDI AG does not accept any liability with respect to the correctness of information in this document. Copyright by AUDI AG.

Removing

– Remove rear noise insulation -2- ⇒ General body repairs, exterior; Rep. gr. 66 ; Noise insulation; Removing and installing noise insulation .

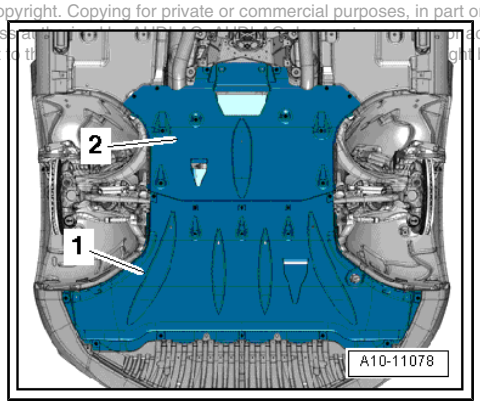

– Remove bolts -2 and 3-.

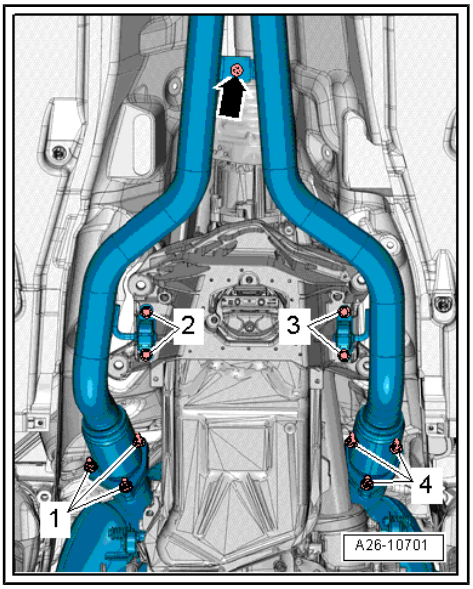

Note

Items marked -1, 4- and -arrow- can be disregarded.

Caution

Risk of damage to flexible joint.

- *The flexible joint must not be bent further than 10°.*
- *Do not subject flexible joint to tensile load.*
- *Take care not to damage wire mesh on flexible joint.*

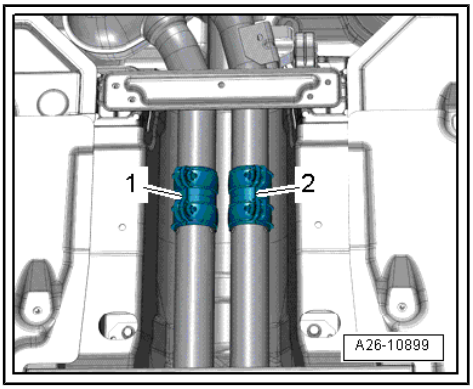

– Loosen clamps -1- and -2- and move towards the rear.
– Lower front exhaust pipes slightly and secure.

– Remove bolt -3- and move manual release cable (front) clear of tunnel cross member.

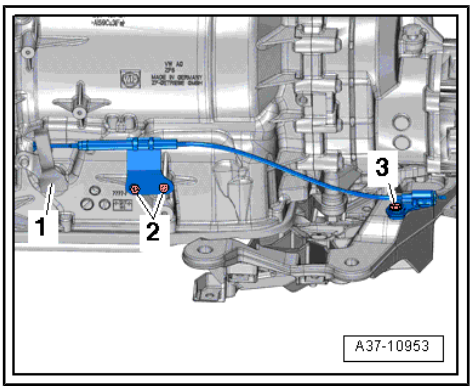

Note

-Items 1 and 2- can be disregarded.

– Remove bolts -arrows- for tunnel cross member.

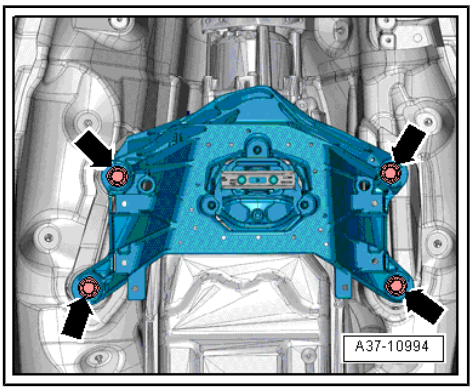

Protected by copyright. Copying for private or commercial purposes, in part or in whole, is not permitted unless authorised by AUDI AG. AUDI AG does not guarantee or accept any liability with respect to the correctness of information in this document. Copyright by AUDI AG.

– Unscrew nuts -arrows- and remove tunnel cross member.

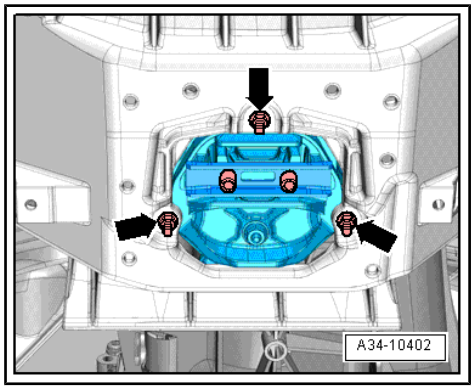

Installing

Installation is carried out in reverse sequence; note the following:

Tightening torques

- ⇒ “3.1 Exploded view - assembly mountings”, page 61
- ⇒ Rep. gr. 26 ; Exhaust pipes/silencers; Exploded view - silencers
- ⇒ General body repairs, exterior; Rep. gr. 66 ; Noise insulation; Exploded view - noise insulation

Protected by copyright. Copying for private or commercial purposes, in part or in whole, is not permitted unless authorised by AUDI AG. AUDI AG does not guarantee or accept any liability with respect to the correctness of information in this document. Copyright by AUDI AG.

4 Transporting gearbox

Special tools and workshop equipment required

- Hook and support tool - 3311- with bolt -3311/1-

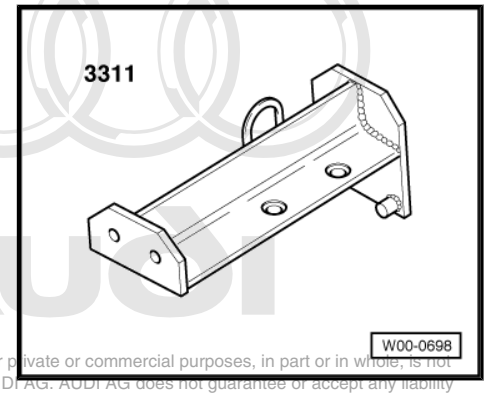

Protected by copyright. Copying for private or commercial purposes, in part or in whole, is not permitted unless authorised by AUDI AG. AUDI AG does not guarantee or accept any liability with respect to the correctness of information in this document. Copyright by AUDI AG.

- Workshop hoist - VAS 6100-

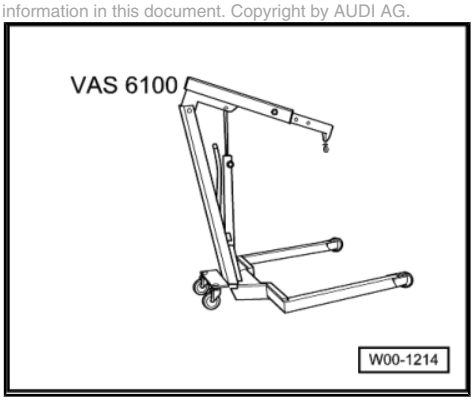

Procedure

- Gearbox removed

> **Caution**
>
> *Risk of damage to gearbox components if gearbox is not supported correctly when removed.*
>
> - *The gearbox must not be placed down on the ATF cooler or ATF oil pan.*

> **WARNING**
>
> *Risk of accident if gearbox is not secured sufficiently.*
>
> - *Replace bolt of hook and support tool - 3311- with new, longer bolt -3311/1- .*
> - *Otherwise the gearbox is not secured properly.*

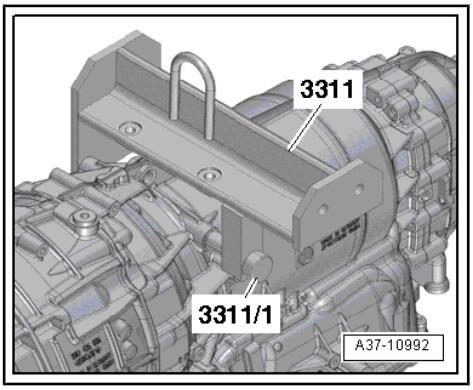

– Secure gearbox to hook and support tool - 3311- (using new, longer bolt -3311/1-).

– The workshop hoist - VAS 6100- can be used to lift and move the gearbox.

5 Securing to engine and gearbox support

Special tools and workshop equipment required

- Support plate - VW 309-

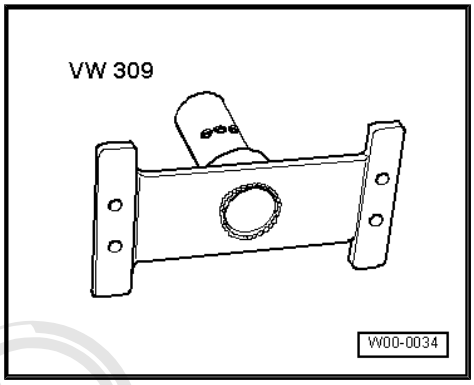

- Engine and gearbox support - VAS 6095-

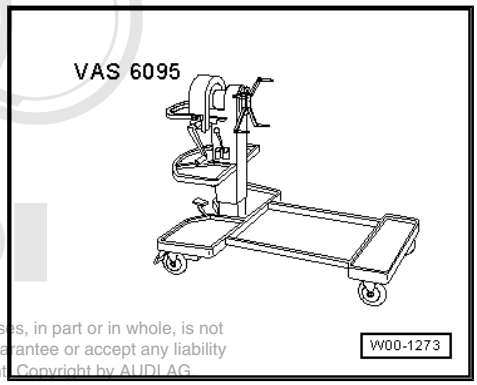

Protected by copyright. Copying for private or commercial purposes, in part or in whole, is not permitted unless authorised by AUDI AG. AUDI AG does not guarantee or accept any liability with respect to the correctness of information in this document. Copyright by AUDI AG

Procedure

- Gearbox is on workshop hoist - VAS 6100- ⇒ page 65 .
- Secure support plate - VW 309- to hook and support tool - 3311- .
- Using workshop hoist - VAS 6100- , insert gearbox into engine and gearbox support - VAS 6095- .

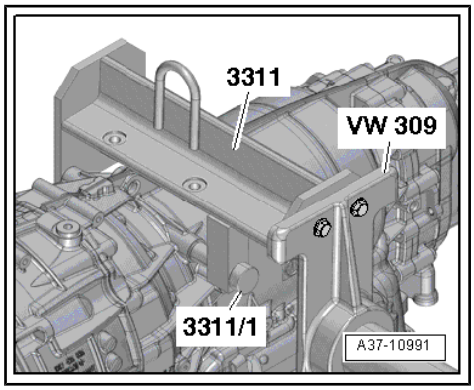

Note

If the filled gearbox with ATF oil pan is to be turned upside-down on the engine and gearbox support, the breathers for the gearbox housing and final drive must be sealed.

6 ATF circuit

⇒ "6.1 Exploded view - ATF circuit", page 67
⇒ "6.2 Removing and installing ATF cooler", page 69
⇒ "6.3 Removing and installing ATF filter", page 70
⇒ "6.4 Removing and installing ATF lines", page 72

6.1 Exploded view - ATF circuit

Caution

Risk of damage to gearbox

Protected by copyright. Copying for private or commercial purposes, in part or in whole, is not permitted unless authorised by AUDI AG. AUDI AG does not guarantee or accept any liability with respect to the correctness of information in this document. Copyright by AUDI AG.

ATF cooler and ATF lines

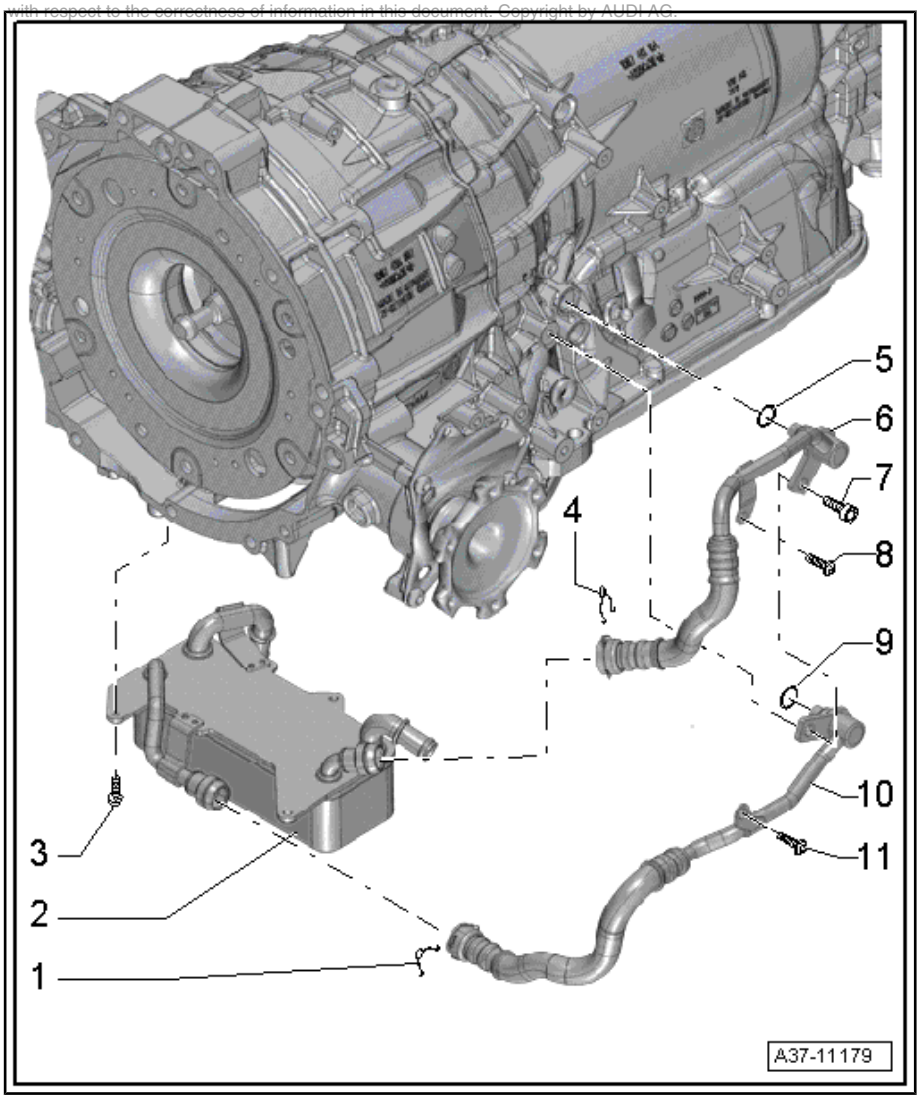

1 - Retaining clip

- ❑ Renew retaining clips which have been bent or over-stretched

2 - ATF cooler

- ❑ Removing and installing ⇒ page 69

3 - Bolt

- ❑ 8 Nm

4 - Retaining clip

- ❑ Renew retaining clips which have been bent or over-stretched

5 - O-ring

- ❑ Renew
- ❑ Lightly lubricate with ATF before inserting

6 - ATF line

- ❑ Cleaning ⇒ page 72
- ❑ Push in by hand with new O-ring as far as stop

7 - Bolt

- ❑ First push in ATF lines with new O-rings by hand as far as stop
- ❑ Retaining tab on bottom ATF line should rest on thread of gearbox
- ❑ Retaining tab on top ATF line should rest on retaining tab on bottom ATF line
- ❑ 20 Nm

8 - Bolt

- ❑ 8 Nm

9 - O-ring
- ❑ Renew
- ❑ Lightly lubricate with ATF before inserting

10 - ATF line
- ❑ Cleaning ⇒ page 72
- ❑ Push in by hand with new O-ring as far as stop

11 - Bolt
- ❑ 8 Nm

Drain plugs and screw plugs

1 - ATF drain plug
- ❑ Renew
- ❑ 12 Nm

2 - Drain plug
- ❑ For gear oil in transfer box
- ❑ Renew
- ❑ 12 Nm

3 - Screw plug
- ❑ For inspection and filler hole
- ❑ For gear oil in transfer box
- ❑ Renew
- ❑ 27 Nm

4 - Screw plug
- ❑ For ATF inspection and filler hole
- ❑ Renew
- ❑ Different versions possible
- ❑ 30 Nm

5 - Screw plug
- ❑ For inspection and filler hole
- ❑ For gear oil in front final drive
- ❑ 27 Nm

6 - Drain plug
- ❑ For gear oil in front final drive
- ❑ 10 Nm

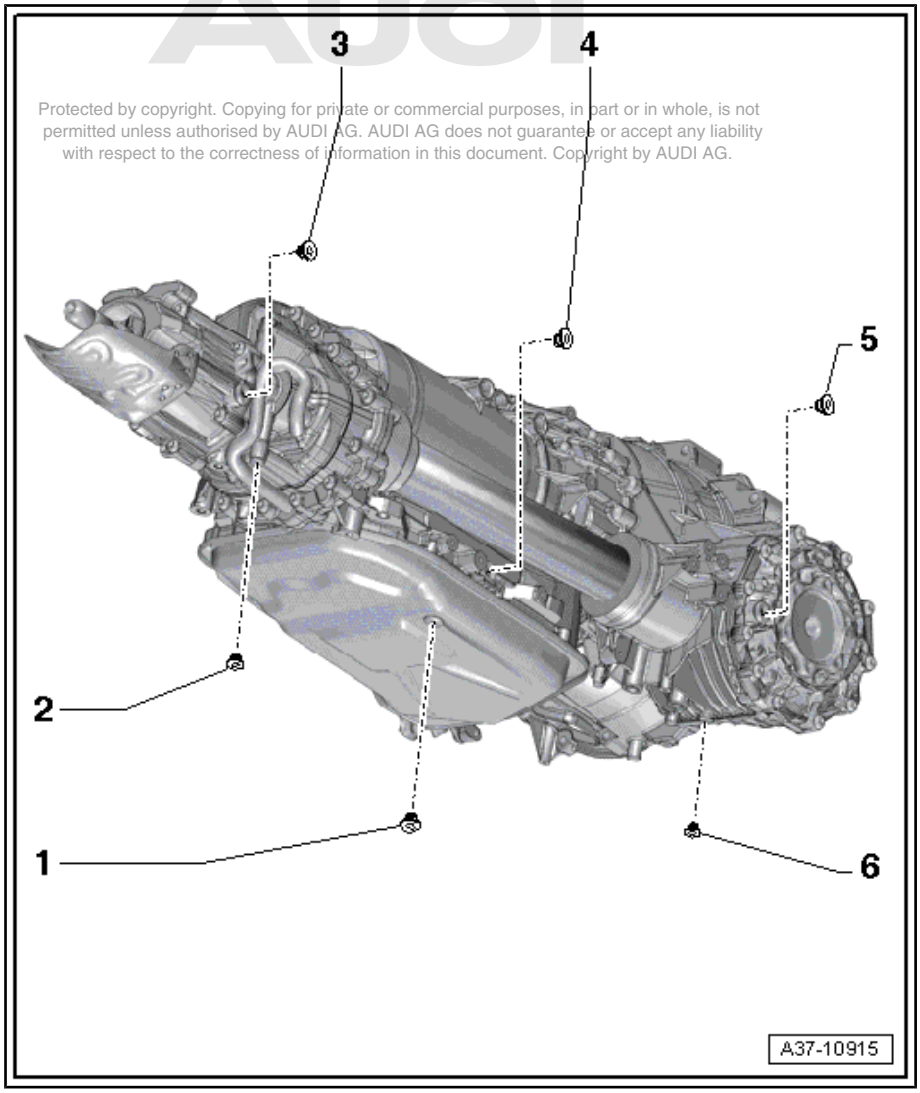

Protected by copyright. Copying for private or commercial purposes, in part or in whole, is not permitted unless authorised by AUDI AG. AUDI AG does not guarantee or accept any liability with respect to the correctness of information in this document. Copyright by AUDI AG.

Measure length of breather pipe on adapter for oil filling - VAS 6262 A- and shorten if necessary.

To ensure that breather pipe of adapter for oil filling -VAS 6262 A- does not make contact with bottom of oil container, breather pipe must be shortened to dimension -a-.

- Dimension -a- = 210 mm

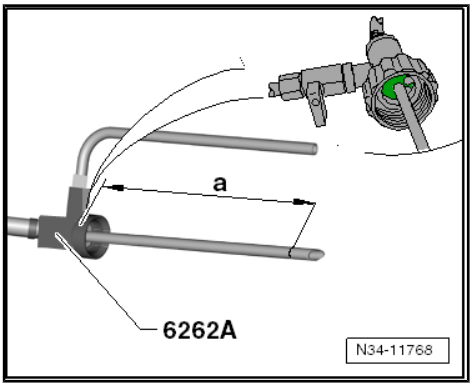

Note

Dimension -a- is measured from stem (green area in magnified view) of adapter for oil filling -VAS 6262 A- .

– Mark length on breather pipe and shorten breather pipe using pipe cutter -6056/2- .

– Clean adapter for oil filling - VAS 6262 A- .

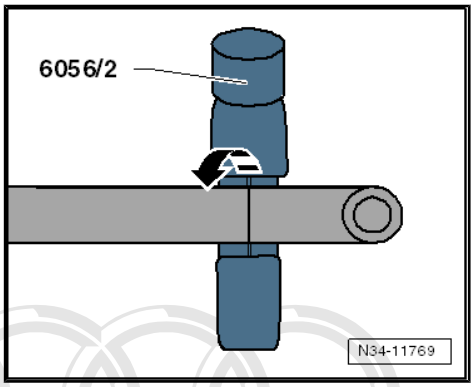

6.2 Removing and installing ATF cooler

Special tools and workshop equipment required

♦ Hose clamps, up to 25 mm - 3094-

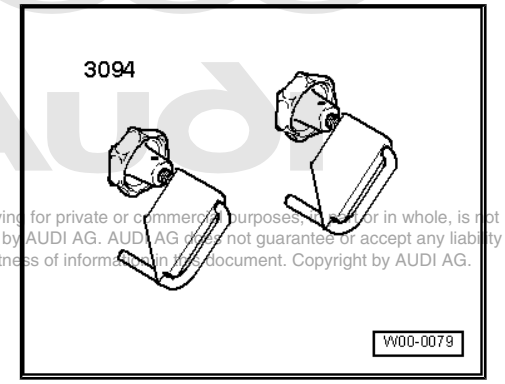

Protected by copyright. Copying for private or commercial purposes, in part or in whole, is not permitted unless authorised by AUDI AG. AUDI AG does not guarantee or accept any liability with respect to the correctness of information in this document. Copyright by AUDI AG.

♦ Used oil collection and extraction unit - VAS 6622-

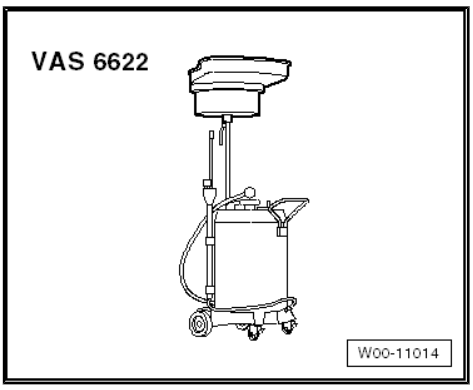

Removing

– Remove subframe cross brace ⇒ Running gear, axles, steering; Rep. gr. 40 ; Subframe; Removing and installing subframe cross brace .

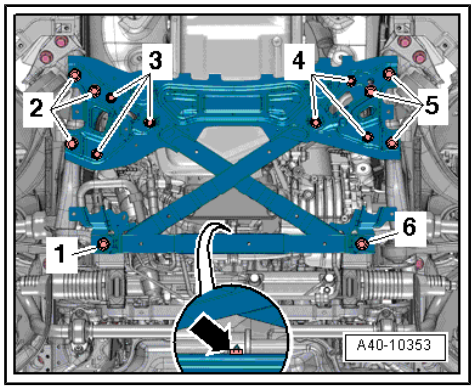

Caution

Risk of damage to parts of the running gear.

- *Do not let the vehicle down on the wheels if the gearbox mounting, steering rack or subframe cross brace are not properly installed.*

– Place used oil collection and extraction unit - VAS 6622- below gearbox.

– Pull off retaining clips -1- and -4- and disconnect ATF lines.

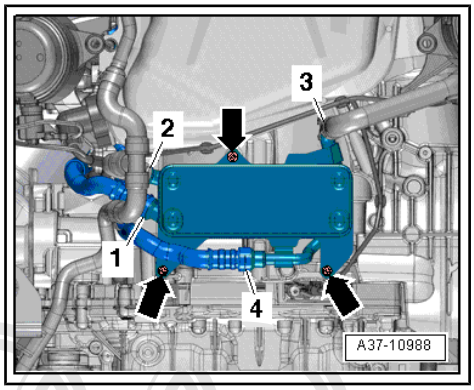

Note

Place a cloth below the connection to catch escaping coolant.

– Clamp off coolant hoses using hose clamps up to 25 mm - 3094- and disconnect hoses (release hose clips -2- and -3-).

– Remove bolts -arrows- and detach ATF cooler.

Installing

Installation is carried out in reverse sequence; note the following:

– Push on ATF lines as far as stop and fit retaining clips -1- and -4-.

- The retaining clips must be fitted securely.
- Renew retaining clips which have been bent or over-stretched.
- Leaking ATF lines must be renewed.

– Check ATF level ⇒ page 74 .

Protected by copyright. Copying for private or commercial purposes, in part or in whole, is not permitted unless authorised by AUDI AG. AUDI AG does not guarantee or accept any liability with respect to the correctness of information in this document. Copyright by AUDI AG.

Tightening torques

- ⇒ “6.1 Exploded view - ATF circuit”, page 67 .
- ⇒ Running gear, axles, steering; Rep. gr. 40 ; Subframe; Exploded view - subframe

6.3 Removing and installing ATF filter

Special tools and workshop equipment required

- Used oil collection and extraction unit - VAS 6622-

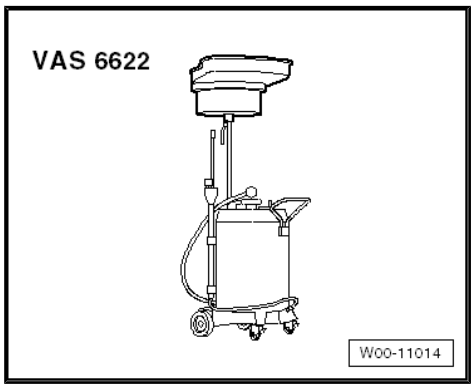

Removing

Note

- ⇒ *"3.3 General repair instructions", page 6* .
- ⇒ *"3.1 Rules for cleanliness", page 5* .

– Remove ATF oil pan ⇒ page 85 .

– Place used oil collection and extraction unit - VAS 6622- below gearbox.

– Carefully pull ATF filter downwards off mechatronic unit.

Installing

Installation is carried out in reverse sequence; note the following:

– Fit O-ring -2- on ATF filter -1-.

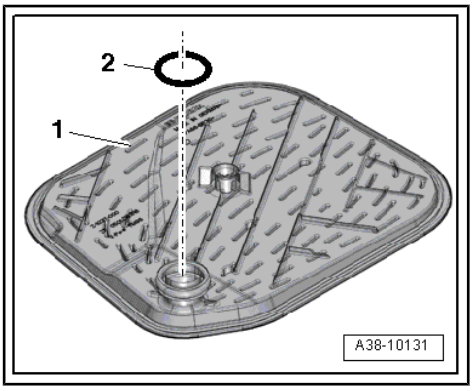

– Clean both magnets -arrows-. Ensure that magnets make full contact with recesses in ATF filter.

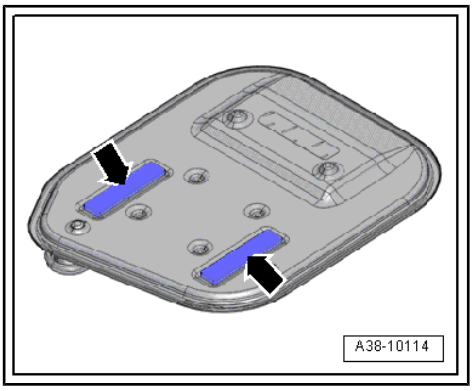

– Fit ATF filter on mechatronic unit.

- The intake neck -1- of the ATF filter must be inserted as far as the stop in aperture -2- of the mechatronic unit.
- The retainer -4- on the reverse side must engage on the bolt -3- located opposite on the mechatronic unit.

– Install ATF oil pan ⇒ page 85 .

– Fill up with ATF ⇒ page 77 .

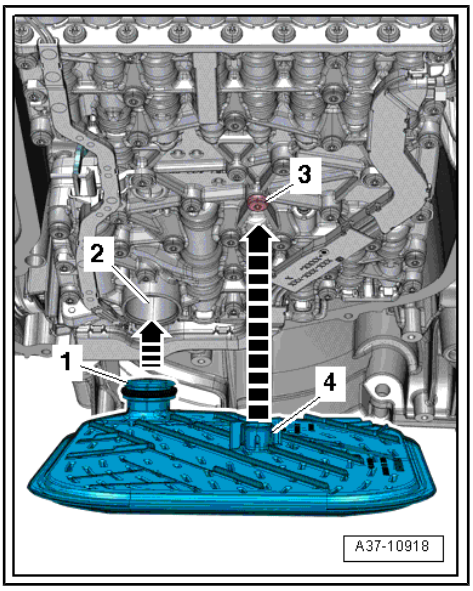

Protected by copyright. Copying for private or commercial purposes, in part or in whole, is not permitted unless authorised by AUDI AG. AUDI AG does not guarantee or accept any liability with respect to the correctness of information in this document. Copyright by AUDI AG.

6.4 Removing and installing ATF lines

Special tools and workshop equipment required

- Used oil collection and extraction unit - VAS 6622-

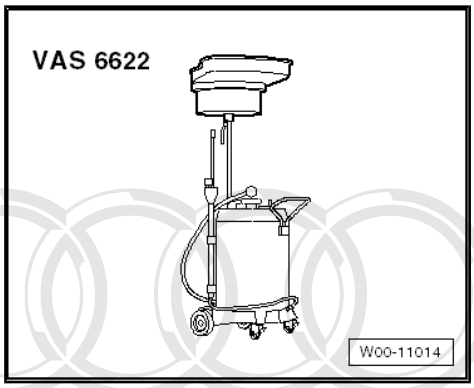

- Hose, approx. 18 mm dia.
- Compressed-air gun (commercially available)
- Safety goggles

Removing and installing

Protected by copyright. Copying for private or commercial purposes, in part or in whole, is not permitted unless authorised by AUDI AG. AUDI AG does not guarantee or accept any liability with respect to the correctness of information in this document. Copyright by AUDI AG.

Note

- ⇒ *"3.3 General repair instructions", page 6* .
- ⇒ *"3.1 Rules for cleanliness", page 5* .
- *Seal off open lines and connections with clean plugs from engine bung set - VAS 6122- .*
- *Check ATF level after renewing ATF lines* ⇒ *page 74* .

Caution

Risk of damage to gearbox

- ***All plugs inserted in ATF lines and gearbox when dismantling must be removed.***
- ***If you forget to remove the plugs, the ATF cooling will be ineffective and the gearbox will be damaged.***

Cleaning

Note

⇒ *"3.1 Rules for cleanliness", page 5* .

– Before fitting a replacement gearbox, always blow through the ATF cooler and ATF lines with compressed air (not more than 10 bar).

– Place used oil collection and extraction unit - VAS 6622- below gearbox.

Note

If the ATF which emerges during cleaning is very dirty, the ATF cooler and ATF lines must additionally be flushed out with clean ATF.

Protected by copyright. Copying for private or commercial purposes, in part or in whole, is not permitted unless authorised by AUDI AG. AUDI AG does not guarantee or accept any liability with respect to the correctness of information in this document. Copyright by AUDI AG.

7 ATF

⇒ “7.1 Checking ATF level”, page 74
⇒ “7.2 Draining and filling ATF”, page 77

7.1 Checking ATF level

Special tools and workshop equipment required

- Vehicle diagnostic tester
- Used oil collection and extraction unit - VAS 6622-

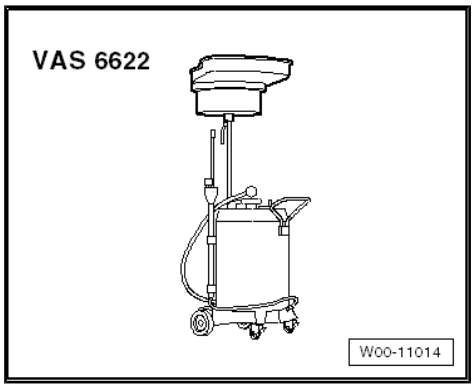

- Adapter for oil filling - VAS 6262 A-

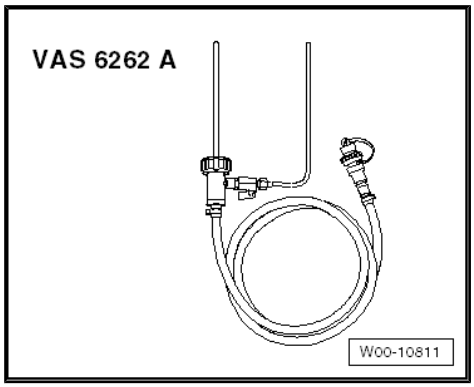

- Adapter for filling ATF oil - VAS 6262/5-
- If necessary, adapter - VAS 6262/6-

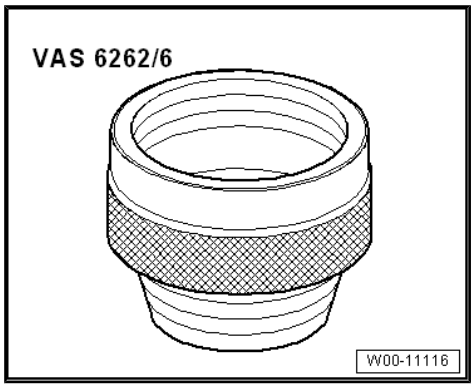

- 1 litre ATF container (genuine replacement part) ⇒ Electronic parts catalogue
- Safety goggles
- Protective gloves (acid resistant)

Copyright by AUDI AG. Any copying, duplicating, distribution or publication of this document, in part or in whole, is not permitted unless authorised by AUDI AG. AUDI AG does not guarantee or accept any liability with respect to the correctness of information in this document. Copyright by AUDI AG.

Test conditions

- Gearbox must not be in emergency running (backup) mode.

- Vehicle must be absolutely horizontal (drive it onto a four-pillar lifting platform or over an inspection pit).
- Gearbox is in position “P”.
- Parking brake button must be pulled up to apply the electro-mechanical parking brake.
- Extractor hose(s) of an exhaust gas extractor (switched on) must be connected.
- Air conditioner and heating system switched off.
- Vehicle diagnostic tester is connected.
- The ATF temperature should not be higher than 30° C - 35° C at the beginning of the test (the temperature will rise during the test). This is because the oil level measurement value is only correct if measured between 35° and 45° (maximum 50° C in hot climates).

Protected by copyright. Copying for private or commercial purposes, in part or in whole, is not permitted unless authorised by AUDI AG. AUDI AG does not guarantee or accept any liability with respect to the correctness of information in this document. Copyright by AUDI AG.

Caution

Risk of damage to gearbox

- *Use only the ATF supplied as a replacement part for automatic gearbox 0BL. For allocation see ⇒ Electronic parts catalogue*
- *Other types of oil cause malfunctions and/or failure of the gearbox.*
- *The adapter for filling ATF oil must be clean and the ATF must not be mixed with other types of ATF!*
- *The engine must not be started if only a little or no ATF remains in gearbox after repair work or after excessive ATF leakage.*

Procedure

– Using the diagnostic tester in Guided Fault Finding mode, go to `Function/Component Selection` and select the following menu items:

- `Drive system`
- `0BL gearbox`
- `01 - Self-diagnosis-compatible systems`
- `02 - Gearbox electronics`
- `02 - Gearbox electronics, Functions`
- `02 - Measured values`

– Select the value for `Gearbox oil temperature` (ATF) from the menu.

– Read off ATF temperature.

Checking and correcting ATF level

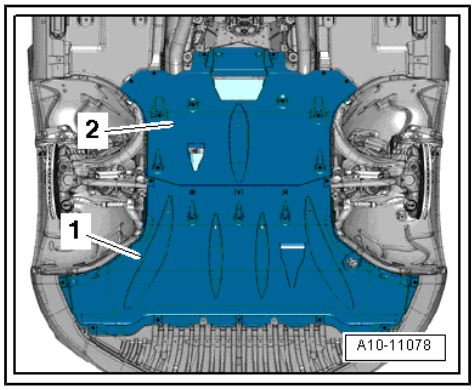

– Remove rear noise insulation -2- ⇒ General body repairs, exterior; Rep. gr. 66 ; Noise insulation; Removing and installing noise insulation .

– Start engine with selector lever in position “P”.

Note

Only start the engine when all the necessary items have been prepared. The ATF temperature increases very quickly; this may make it impossible to perform the ATF level check.

– With brake pedal still depressed, select all gear positions (“P”, “R”, “N”, “D/S”) one after the other at idling speed, maintaining each position for at least 10 seconds.

– Shift gearbox into “P”.

– Allow engine to continue running at idling speed.

– Place used oil collection and extraction unit - VAS 6622- below gearbox.

WARNING

Risk of eye injury.

- ***Wear safety goggles.***

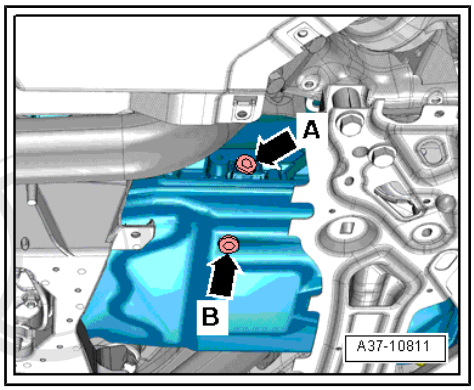

– When an ATF temperature of 35 °C is reached, unscrew plug for ATF inspection and filler hole -arrow A- and drain off any surplus ATF.

- The ATF level is OK if a small amount of fluid comes out at the ATF inspection and filler hole -arrow A- when the ATF temperature is between 35 °C and 45 °C (maximum 50° C in hot climates) (the fluid level rises due to expansion as it warms up).
- If no ATF comes out, fill up with ATF ⇒ “7.2 Draining and filling ATF”, page 77 .

Note

- *You should add some ATF at a temperature of about 40° C; doing so will decrease the likelihood that the check will have to be performed again because the ATF level is too low (this would mean cooling the gearbox to the test temperature).*
- *The ATF inspection and filler hole must be sealed again before the ATF temperature reaches 45 °C (or a maximum of 50 °C in hot climates).*
- *Renew plug for ATF inspection and filler hole.*
- *If the ATF level is checked when the ATF temperature is too low, this will result in overfilling.*
- *If the ATF level is checked when the ATF temperature is too high, this will result in underfilling.*
- *Both overfilling and underfilling will impair the function of the gearbox.*

Any duplication or distribution of this document, or any extract from it, for commercial purposes, in part or in whole, is not permitted unless authorised by AUDI AG. AUDI AG does not guarantee or accept any liability with respect to the correctness of information in this document. Copyright by AUDI AG.

– Tighten new plug for ATF inspection and filler hole. The ATF level check is now completed.

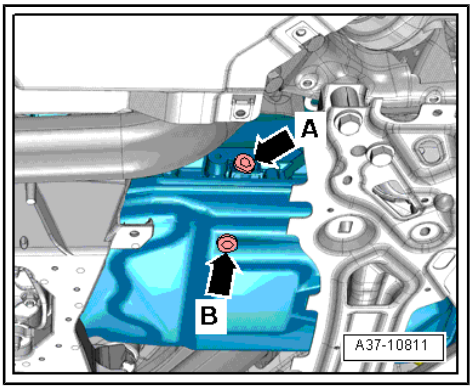

Tightening torques

- ⇒ page 68
- ⇒ General body repairs, exterior; Rep. gr. 66 ; Noise insulation; Exploded view - noise insulation

7.2 Draining and filling ATF

Special tools and workshop equipment required

- Used oil collection and extraction unit - VAS 6622-

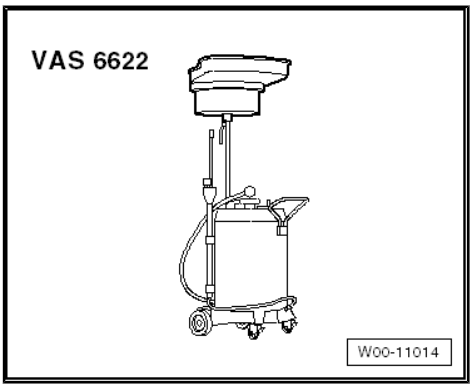

- Adapter for oil filling - VAS 6262 A-

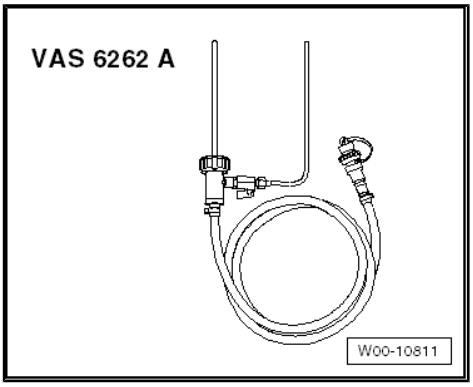

- Adapter for filling ATF oil - VAS 6262/5-
- If necessary, adapter - VAS 6262/6-

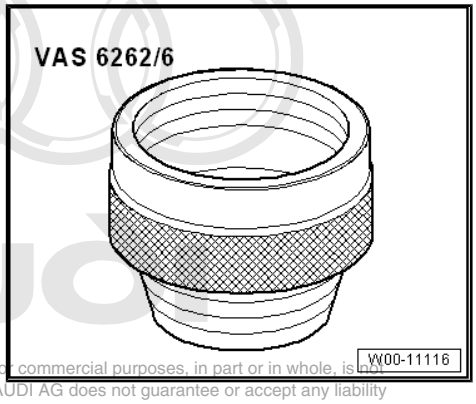

Protected by copyright. Copying for private or commercial purposes, in part or in whole, is not permitted unless authorised by AUDI AG. AUDI AG does not guarantee or accept any liability with respect to the correctness of information in this document. Copyright by AUDI AG.

- 1 litre ATF container (genuine replacement part) ⇒ Electronic parts catalogue

- Safety goggles
- Protective gloves (acid resistant)

Draining

Note

When draining the ATF the gearbox should be warm (operating temperature). However, the engine must not be started when there is no ATF in the gearbox or if the level is too low.

- Engine not running.
- Vehicle must be absolutely horizontal (on a four-pillar lifting platform or over an inspection pit).
- Gearbox is in position “P”.
- Parking brake button must be pulled up to apply the electro-mechanical parking brake.

– Remove rear noise insulation -2- ⇒ General body repairs, exterior; Rep. gr. 66 ; Noise insulation; Removing and installing noise insulation .

Copyright by AUDI AG. Reproduction for commercial purposes permitted unless authorised by AUDI AG. AUDI AG does not guarantee with respect to the correctness of information in this document.

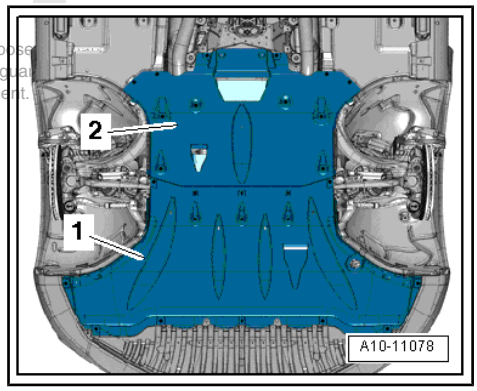

– Place used oil collection and extraction unit - VAS 6622- below gearbox.

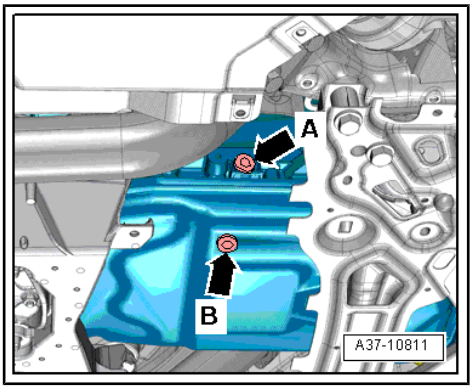

WARNING

Risk of eye injury.

- *Wear safety goggles.*

– Remove ATF drain plug -arrow B- and allow ATF to drain off.

Note

- *Always adhere to waste disposal regulations.*
- *Renew ATF drain plug with seal.*
- *Renew plug for ATF inspection and filler hole.*

– Tighten new drain plug -arrow B-.

Caution

Risk of damage to gearbox

- *Only the ATF available as a replacement part may be used for the automatic gearbox 0BL.*
- *For correct version, refer to ⇒ Electronic parts catalogue*
- *Other types of oil cause malfunctions and/or failure of the gearbox.*
- *The adapter for filling ATF oil must be clean and the ATF must not be mixed with other types of ATF!*
- *The engine must not be started if only a little or no ATF remains in gearbox after repair work or after excessive ATF leakage.*

Filling up ATF

– Secure ATF container with adapter for oil filling - VAS 6262 A- as high as possible on vehicle.

– Unscrew plug for ATF inspection and filler hole -arrow A-.

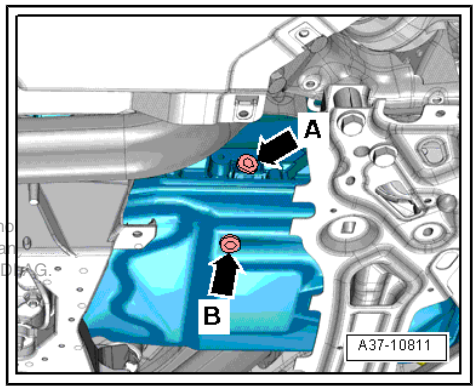

Protected by copyright. Copying for private or commercial purposes, in part or in whole, is not permitted unless authorised by AUDI AG. AUDI AG does not guarantee or accept any liability with respect to the correctness of information in this document. Copyright by AUDI AG.

- Insert adapter for filling ATF oil - VAS 6262/5- into ATF inspection and filler hole -arrow-.
- Fill up with ATF via adapter until ATF comes out of inspection and filler hole.
- Shift gearbox into “P”.
- Start engine and turn off after 20 seconds.
- Continue filling with ATF using adapter until ATF comes out of inspection hole.
- Start engine.
- Continue filling with ATF via adapter until ATF comes out of inspection and filler hole again.
- Tighten old plug for ATF inspection and filler hole.
- With brake pedal depressed, select all gear positions (“P”, “R”, “N”, “D/S”) one after the other at idling speed, maintaining each position for at least 3 seconds.
- Shift gearbox into “P”.
- Check ATF level and top up as required ⇒ page 74 .

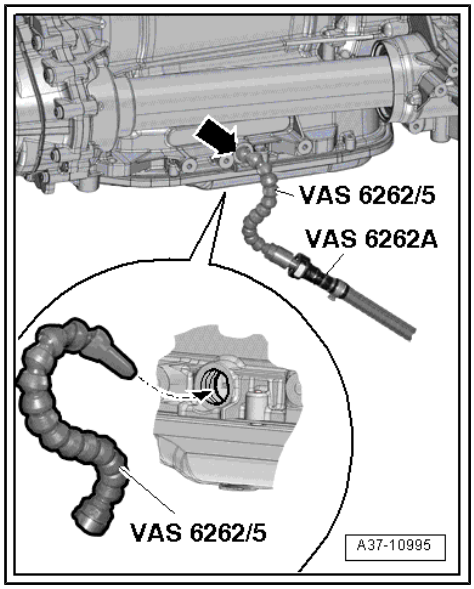

Note

Observe all notes and test requirements for “Checking and correcting ATF level”.

Tightening torques

- ⇒ page 68

Protected by copyright. Copying for private or commercial purposes, in part or in whole, is not permitted unless authorised by AUDI AG. AUDI AG does not guarantee or accept any liability with respect to the correctness of information in this document. Copyright by AUDI AG.

38 – Gears, control

1 ATF system

⇒ "1.1 Exploded view - ATF system", page 81

⇒ "1.2 Removing and installing hydraulic pulse accumulator with accumulator solenoid N485 ", page 84

⇒ "1.3 Removing and installing oil pan", page 85

1.1 Exploded view - ATF system

Note

Coat O-rings and seals with ATF. Other types of lubricant will cause the gearbox hydraulics to malfunction.

Protected by copyright. Copying for
permitted unless authorised by AU
with respect to the correctness of

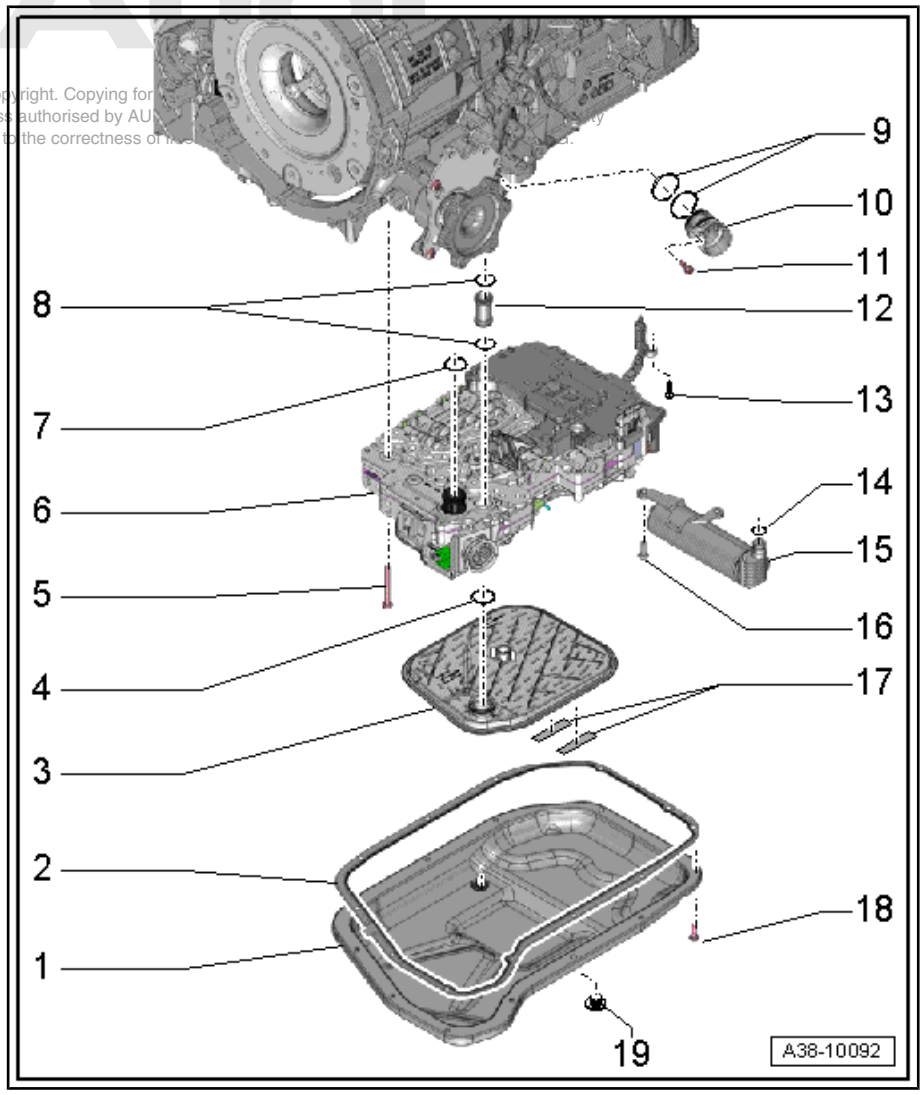

1 - ATF oil pan
- ❑ Removing and installing ⇒ page 85

2 - Gasket
- ❑ Renew

3 - ATF filter
- ❑ Removing and installing ⇒ page 70

4 - O-ring
- ❑ Renew

5 - Bolt
- ❑ Tightening torque and sequence for mechatronic unit without hydraulic pulse accumulator ⇒ page 83
- ❑ Tightening torque and sequence for mechatronic unit with hydraulic pulse accumulator ⇒ page 83

6 - Mechatronic unit
- ❑ Removing and installing ⇒ page 89

7 - O-ring
- ❑ Renew

8 - O-rings
- ❑ Renew together with ATF pipe ⇒ Item 12 (page 82)

9 - Seals
- ❑ Renew together with connector housing ⇒ Item 10 (page 81)

10 - Connector housing
- ❑ Renew

11 - Bolt
- ❑ 5.5 Nm

12 - ATF pipe
- ❑ Renew

13 - Bolt
- ❑ 10 Nm

14 - O-ring
- ❑ Renew
- ❑ Not fitted on all versions
- ❑ For connection on hydraulic pulse accumulator

15 - Hydraulic pulse accumulator with accumulator solenoid - N485-
- ❑ Not fitted on all versions
- ❑ Removing and installing ⇒ page 84

16 - Bolt
- ❑ Not fitted on all versions
- ❑ Tightening torque and sequence ⇒ page 83

17 - Magnets
- ❑ Ensure full contact with ATF filter
- ❑ Clean before installing

18 - Bolt
- ❑ Renew
- ❑ Tightening torque and sequence ⇒ page 82

19 - Drain plug
- ❑ For ATF in gearbox
- ❑ Tightening torque ⇒ page 68

ATF oil pan - tightening torque and sequence

Note

Renew bolts for ATF oil pan.

– Tighten bolts in 3 stages in the sequence shown:

Stage	Bolts	Tightening torque/tightening angle
1.	-1 … 12-	Screw in new bolts by hand until bolt heads make contact
2.	-1 … 12-	4 Nm
3.	-1 … 12-	Turn 45° further

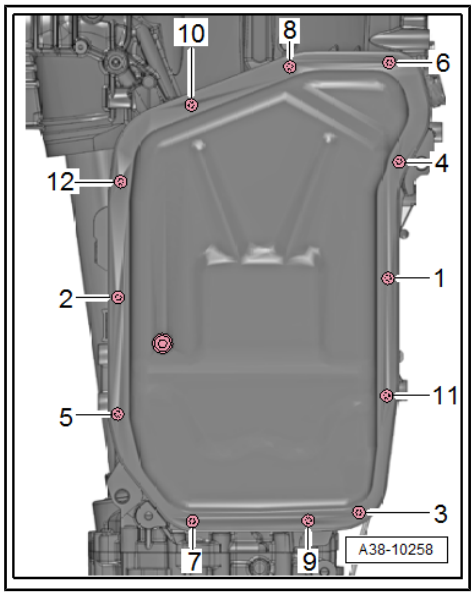

Protected by copyright. Copying or distribution of this document, or any part thereof, is not permitted unless authorised by AUDI AG. AUDI AG does not guarantee or accept any liability with respect to the correctness of information in this document. Copyright by AUDI AG.

Tightening torque and sequence for mechatronic unit without hydraulic pulse accumulator

– Tighten bolts to 10 Nm in sequence -1 ... 19-.

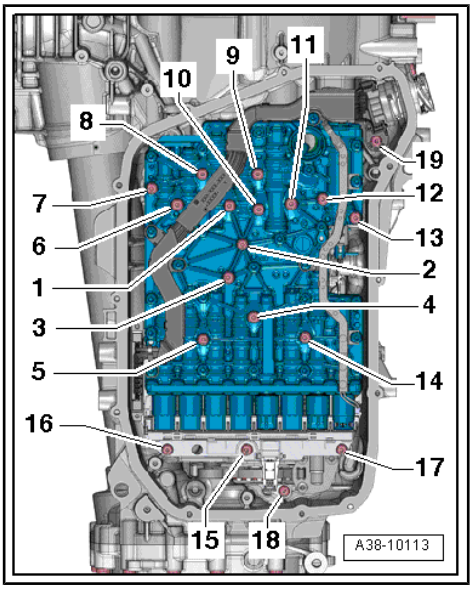

Note

In gearboxes with hydraulic pulse accumulator, bolt -17- is not fitted until the pulse accumulator is installed ⇒ page 83 .

Tightening torque and sequence for mechatronic unit with hydraulic pulse accumulator

– Tighten bolts for mechatronic unit to 10 Nm in the sequence -1 ... 17-.

– Install hydraulic pulse accumulator -A- ⇒ page 84 .

– Tighten remaining bolts to 10 Nm in the sequence -18 ... 21-.

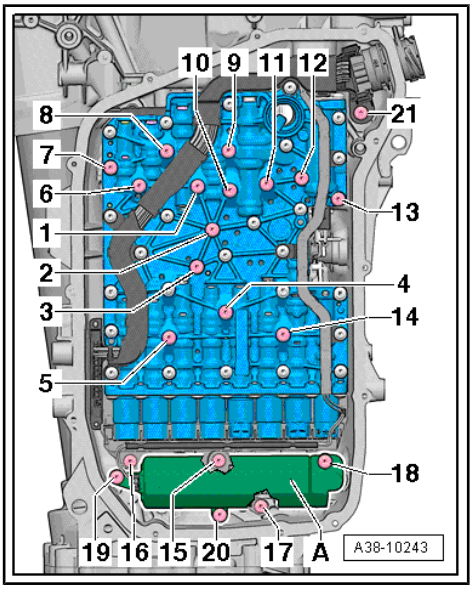

Note

Bolts -18, 19 and 20- secure the hydraulic pulse accumulator.

Hydraulic pulse accumulator: tightening torque and sequence

– Tighten bolts to 10 Nm in sequence -1 ... 3-.

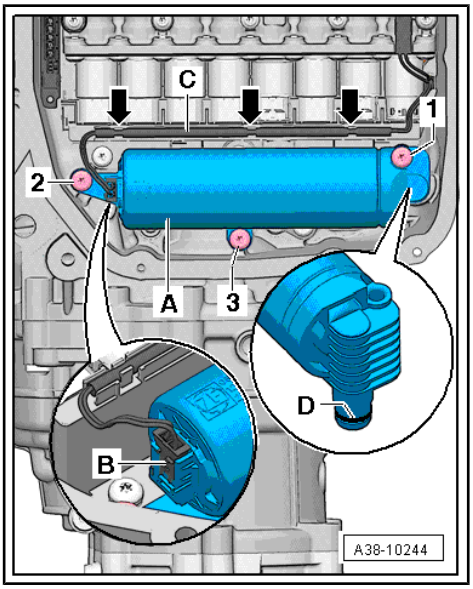

Protected by copyright. Copying for private or commercial purposes, in part or in whole, is not permitted unless authorised by AUDI AG. AUDI AG does not guarantee or accept any liability with respect to the correctness of information in this document. Copyright by AUDI AG.

1.2 Removing and installing hydraulic pulse accumulator with accumulator solenoid - N485-

Note

- *The hydraulic pulse accumulator is not fitted in all gearbox versions.*
- *⇒ "3.3 General repair instructions", page 6* .
- *⇒ "3.1 Rules for cleanliness", page 5* .

Removing

- Gearbox in vehicle

Caution

Risk of damage to gearbox

- ***The engine must not be started when there is no more ATF in the gearbox and the mechatronic unit has been removed.***

– Shift gearbox into "P".

– Switch off ignition.

– Remove ATF oil pan ⇒ page 85 .

– Remove ATF filter ⇒ page 70 .

Protected by copyright. Copying for private or commercial purposes, in part or in whole, is not permitted unless authorised by AUDI AG. AUDI AG does not guarantee or accept any liability with respect to the correctness of information in this document. Copyright by AUDI AG.

Caution

The gearbox control unit (mechatronic unit) can be damaged by electrostatic discharge.

- *Before handling electrical connectors, mechanic must discharge static. To do so, touch an earthed metal object, such as a heater radiator or lifting platform, with your hand.*
- *Do not touch contact pins in gearbox connector with bare hands.*

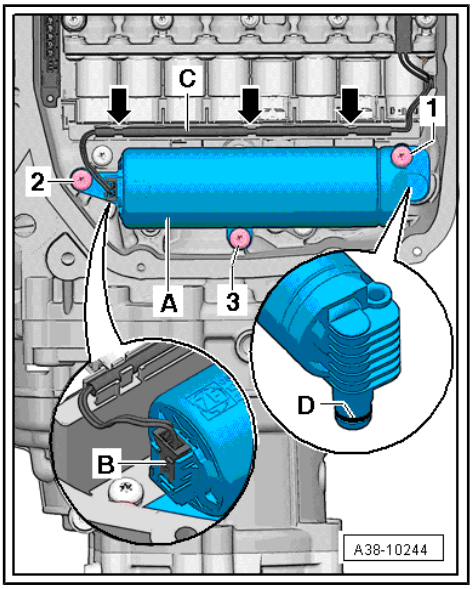

– Carefully unplug electrical connector -B- for hydraulic pulse accumulator -A-.
– Remove bolts in the sequence -3 ... 1-.
– Detach hydraulic pulse accumulator -A-.

Installing

Note

Renew O-ring and bolts for hydraulic pulse accumulator.

– Fit hydraulic pulse accumulator -A- with new O-ring -D-.
– Tighten bolts in the sequence -1 ... 3-.
– Carefully unplug electrical connector -B- for hydraulic pulse accumulator -A-.

Note

Make sure that electrical connector is properly engaged and secured.

– Route electrical wiring -C- as shown in illustration and secure -arrows-.
– Install ATF filter ⇒ page 70 .
– Install ATF oil pan ⇒ page 85 .
– Fill up with ATF ⇒ page 74 .

Tightening torques

♦ ⇒ “1.1 Exploded view - ATF system”, page 81

Photocopy, copy, or other copying for personal or commercial purposes, in part or in whole, is not permitted unless authorised by AUDI AG. AUDI AG does not guarantee or accept any liability with respect to the correctness of information in this document. Copyright by AUDI AG.

1.3 Removing and installing oil pan

Special tools and workshop equipment required

- Guide pin - T40199-

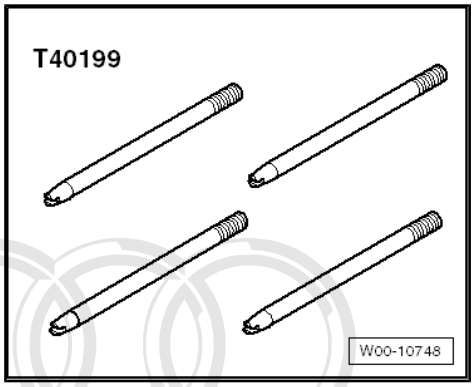

Removing

Note

- ⇒ *"3.3 General repair instructions", page 6* .
- ⇒ *"3.1 Rules for cleanliness", page 5* .

Protected by copyright. Copying for private or commercial purposes, in part or in whole, is not permitted unless authorised by AUDI AG. AUDI AG does not guarantee or accept any liability with respect to the correctness of the information. Copyright by AUDI AG.

– Remove subframe cross brace ⇒ Running gear, axles, steering; Rep. gr. 40 ; Subframe; Removing and installing subframe cross brace .

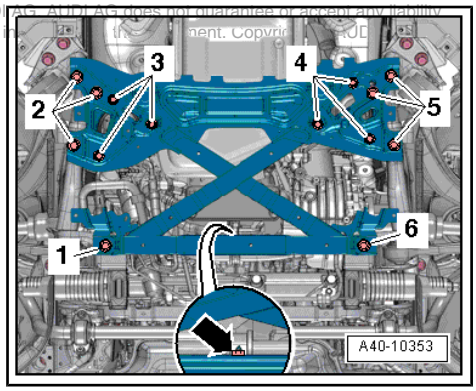

Caution

Risk of damage to parts of the running gear.

- *Do not let the vehicle down on the wheels if the gearbox mounting, steering rack or subframe cross brace are not properly installed.*

– Remove gearbox support with gearbox mounting (rear) ⇒ Rep. gr. 10 ; Assembly mountings; Removing and installing gearbox mounting .

– Drain ATF ⇒ page 77 .

– Remove bolts for ATF oil pan in the sequence -12 ... 1-.

– Remove ATF oil pan.

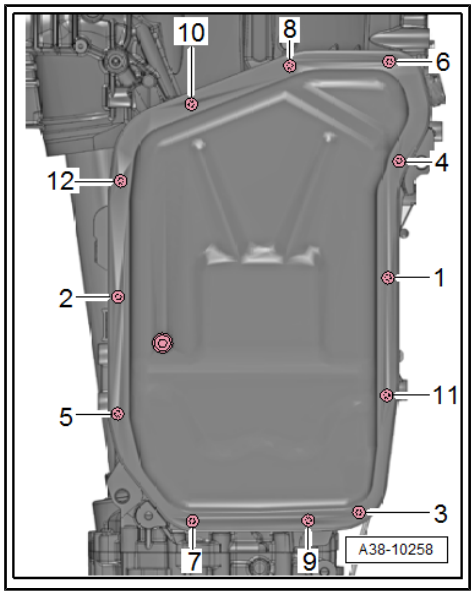

Installing

Installation is carried out in reverse sequence; note the following:

Note

- *Renew gasket and bolts for ATF oil pan.*
- *On high-mileage vehicles, it is recommended to renew the ATF filter if the ATF oil pan is removed* ⇒ *page 70* *. Otherwise the ATF filter only has to be renewed if it has been damaged.*

– Clean both magnets -arrows-. Ensure that magnets make full contact with recesses in ATF filter.

– Clean sealing surface thoroughly; remaining material from the previous gasket must be removed completely.

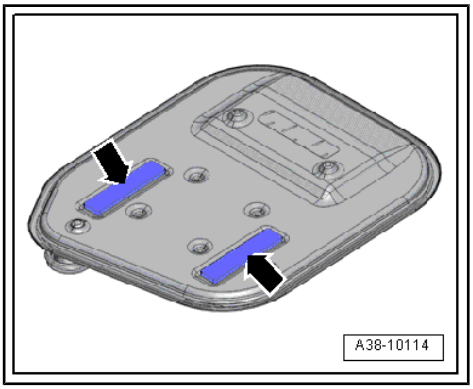

– Make sure that the ATF filter is fitted correctly on the mechatronic unit, otherwise the ATF oil pan cannot be seated properly on the entire surface.

♦ The intake neck -1- of the ATF filter must be inserted as far as the stop in aperture -2- of the mechatronic unit.

♦ The retainer -4- on the reverse side must engage on the bolt -3- located opposite on the mechatronic unit.

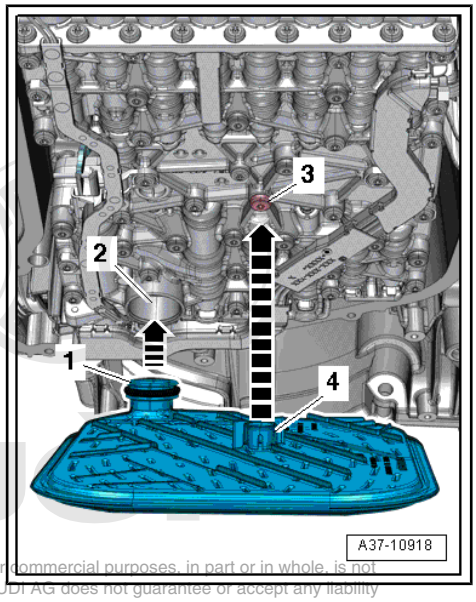

Protected by copyright. Copying for private or commercial purposes, in part or in whole, is not permitted unless authorised by AUDI AG. AUDI AG does not guarantee or accept any liability with respect to the correctness of information in this document. Copyright by AUDI AG.

– Screw in the three guide pins - T40199- hand-tight, as shown in illustration.

– Fit ATF oil pan with new gasket over guide pins - T40199- and onto gearbox.

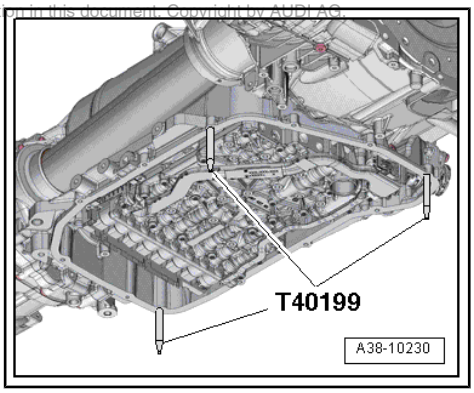

– Screw in bolts -1 … 4- by hand until bolt heads make contact.

– Remove guide pins - T40199- and tighten bolts in specified sequence.

– Fill up with ATF ⇒ page 77 .

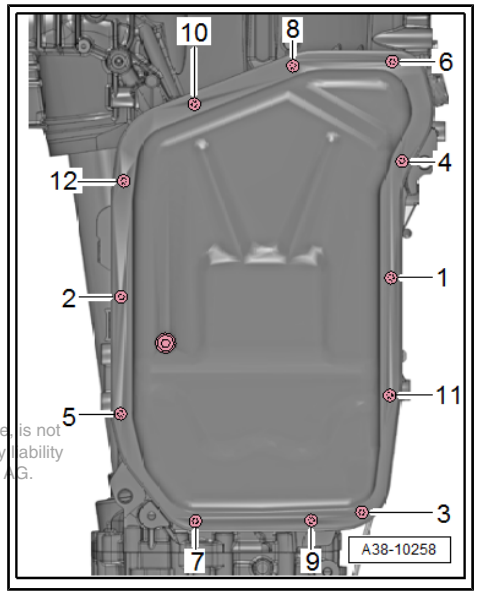

Tightening torques

- ⇒ Fig. ""ATF oil pan - tightening torque and sequence"", page 82
- Gearbox support with gearbox mountings ⇒ Rep. gr. 10 ; Assembly mountings; Exploded view - assembly mountings
- Subframe cross brace ⇒ Running gear, axles, steering; Rep. gr. 40 ; Subframe; Exploded view - subframe

Protected by copyright. Copying for private or commercial purposes, in part or in whole, is not permitted unless authorised by AUDI AG. AUDI AG does not guarantee or accept any liability with respect to the correctness of information in this document. Copyright by AUDI AG.

2 Mechatronic unit

⇒ “2.1 Removing and installing mechatronic unit”, page 89

2.1 Removing and installing mechatronic unit

Special tools and workshop equipment required

- Extractor tool - T10271-

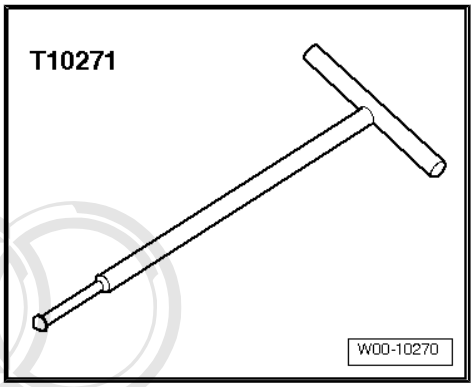

- Guide pin - T40199-

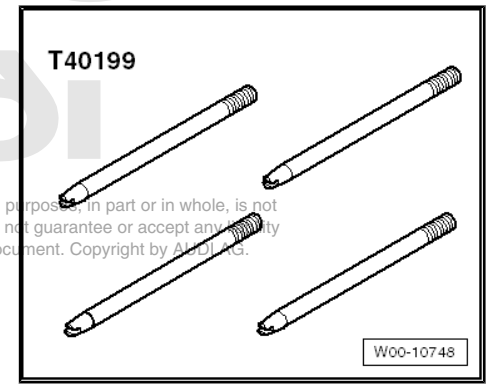

Protected by copyright. Copying for private or commercial purposes, in part or in whole, is not permitted unless authorised by AUDI AG. AUDI AG does not guarantee or accept any liability with respect to the correctness of information in this document. Copyright by AUDI AG.

Removing

- Gearbox in vehicle

Note

- *⇒ “3.3 General repair instructions”, page 6* .
- *⇒ “3.1 Rules for cleanliness”, page 5* .
- *Always renew mechatronic unit if contaminated or defective.*

Caution

Risk of damage to gearbox

- *The engine must not be started when there is no more ATF in the gearbox and the mechatronic unit has been removed.*

– Shift gearbox into “P”.
– Switch off ignition.
– Remove ATF oil pan ⇒ page 85 .

– Remove ATF filter ⇒ page 70 .

Caution

The gearbox control unit (mechatronic unit) can be damaged by electrostatic discharge.

- *Before handling electrical connectors, mechanic must discharge static. To do so, touch an earthed metal object, such as a heater radiator or lifting platform, with your hand.*
- *Do not touch contact pins in gearbox connector with bare hands.*

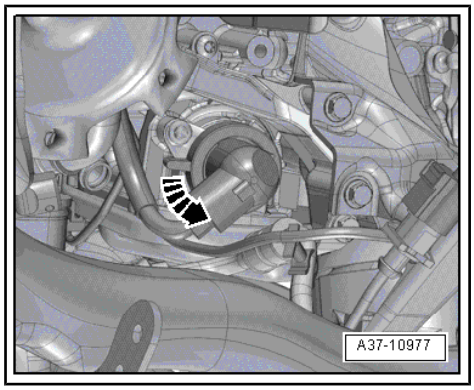

– Turn fastener anti-clockwise -arrow- and unplug electrical connector on gearbox.

– Remove bolt -1-.

– Turn connector housing -2- anti-clockwise -arrow- and detach.

– Remove ATF oil pan ⇒ page 85 .

– Remove ATF filter ⇒ page 70 .

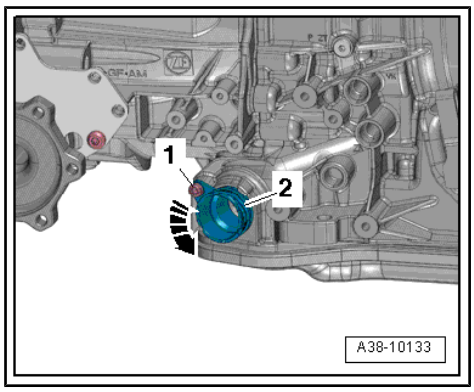

Note

The next steps are easier if you first move the gearbox selector lever -3- for the parking lock manual release mechanism to a vertical position and secure it with a cable tie -arrow-. The selector slide -1- can then be engaged more easily in the jaw -2- of the manual release mechanism.

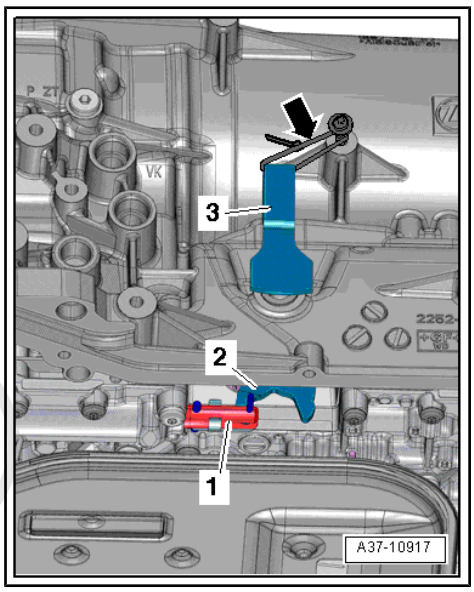

Protected by copyright. Copying for private or commercial purposes, in part or in whole, is not permitted unless authorised by AUDI AG. AUDI AG does not guarantee or accept any liability with respect to the correctness of information in this document. Copyright by AUDI AG.

Gearbox with hydraulic pulse accumulator -A-

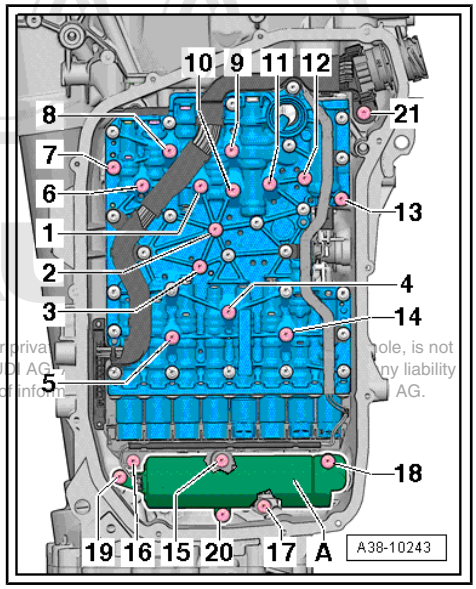

Caution

Risk of damage to mechatronic unit.

- *Loosen only the bolts with Torx T40 head.*
- *If other bolts are loosened, this may affect the operation of the mechatronic unit or the mechatronic unit could come apart.*

Protected by copyright. Copying for priva ole, is not permitted unless authorised by AUDI AG. ny liability with respect to the correctness of inform AG.

– Remove hydraulic pulse accumulator -A- ⇒ page 84

– Remove bolts in the sequence -21 ... 2-.

Note

- *Bolts -18, 19, 20- were removed previously with the hydraulic pulse accumulator.*
- *Do not remove bolts -1- at this stage.*

– Screw four guide pins - T40199- hand-tight into bolt holes -5, 7, 12, 14-.

– Remove bolts -1-.

Gearbox without hydraulic pulse accumulator

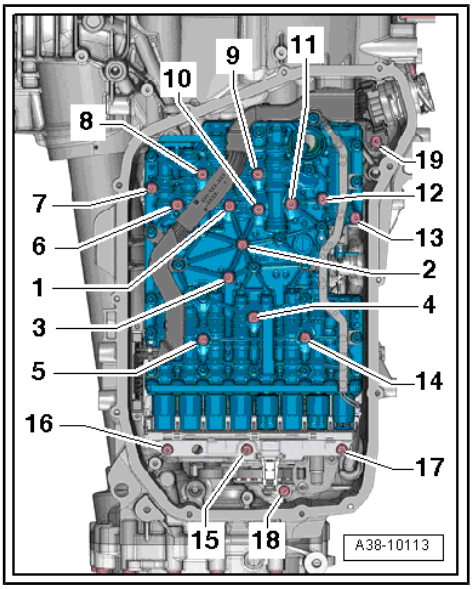

Caution

Risk of damage to mechatronic unit.

- *Loosen only the bolts with Torx T40 head.*
- *If other bolts are loosened, this may affect the operation of the mechatronic unit or the mechatronic unit could come apart.*

– Remove bolts in the sequence -19 ... 2-.

Note

Do not remove bolts -1- at this stage.

– Screw four guide pins - T40199- hand-tight into bolt holes -5, 7, 12, 14-.

– Remove bolts -1-.

– Before detaching mechatronic unit, pull gearbox output speed sender - G195- -4- out of gearbox housing.

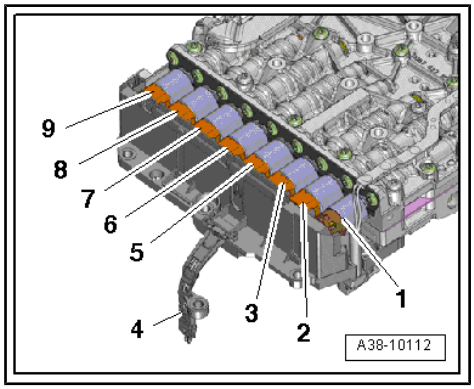

All gearbox versions

– Detach mechatronic unit.

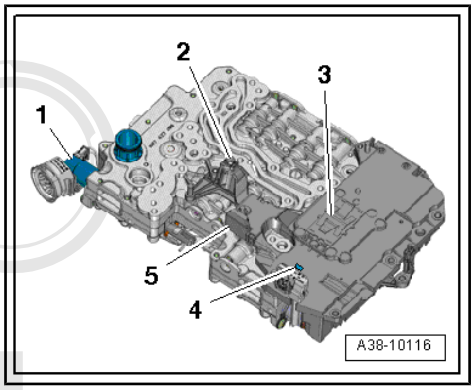

Caution

Risk of damage to senders on rear side of mechatronic unit.

- *When setting down the mechatronic unit, the side with the bolt heads must be facing downwards.*

Installing

Note

Renew O-rings and bolts for mechatronic unit.

Protected by copyright. Copying for private or commercial purposes, in part or in whole, is not permitted without the consent of AUDI AG. AUDI AG does not guarantee or accept any liability with respect to the correctness of information in this document. Copyright by AUDI AG.

– Fit new O-rings -1- and -3- in grooves on ATF pipes.

– Fit ATF pipe -2- in mechatronic unit.

– Check ATF pipes for damage and make sure they are firmly seated in mechatronic unit.

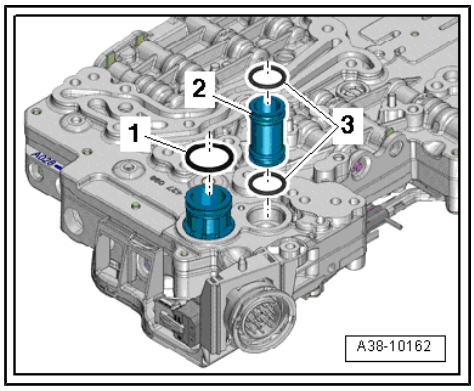

– Pull out sealing sleeve using puller - T10271- and fit new sealing sleeve.

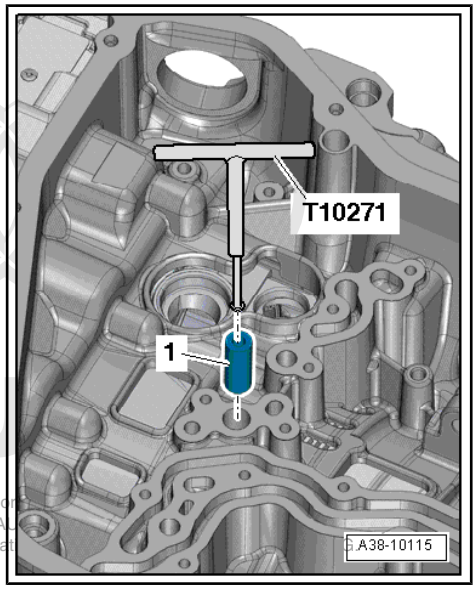

Protected by copyright. Copying for private or
permitted unless authorised by AUDI AG. AU
with respect to the correctness of informat

– If not already in place, screw in 4 guide pins - T40199- hand-tight, as shown in illustration.

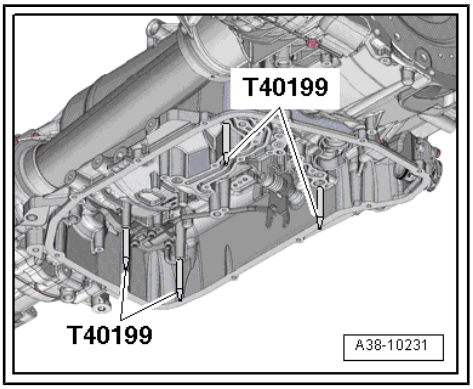

Note

- *The guide pins - T40199- ensure that the mechatronic unit is kept straight while it is being installed. This prevents damage to the ATF pipes on the reverse side of the mechatronic unit.*
- *Because of the spring clip on its reverse side, the mechatronic unit cannot initially be brought into full contact with the gearbox housing.*
- *For this reason, it is advisable to have the assistance of a second mechanic when installing the mechatronic unit with the gearbox in the vehicle.*

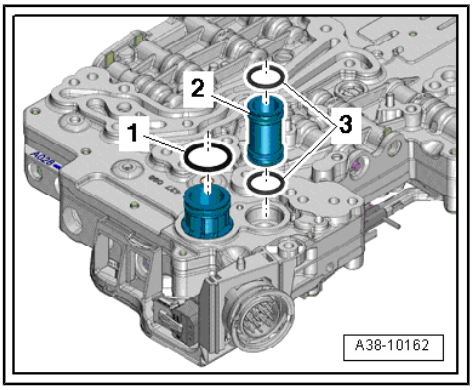

– Fit mechatronic unit onto gearbox housing.

- The jaw -2- of the manual release mechanism must engage behind the pin in the selector slide -1- -arrow-.

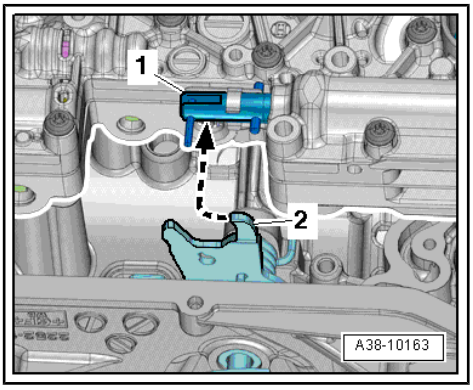

Gearbox with hydraulic pulse accumulator -A-

- Screw in bolts -1 … 4- by hand until bolt heads make contact.
- Remove the 4 guide pins - T40199- .
- Tighten bolts for mechatronic unit in specified sequence ⇒ page 83 .
- Install hydraulic pulse accumulator -A- ⇒ page 84 .

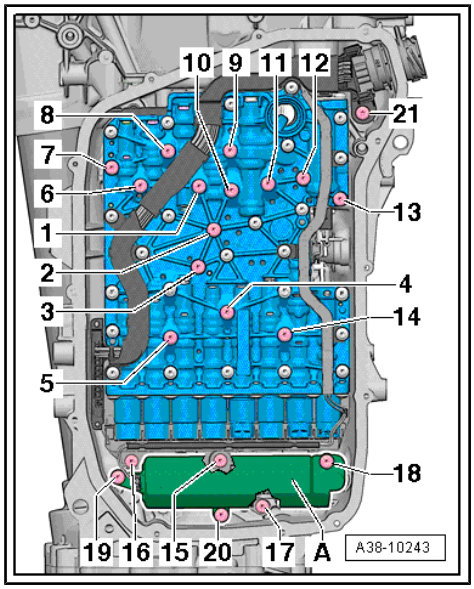

Gearbox without hydraulic pulse accumulator

- Screw in bolts -1 … 4- by hand until bolt heads make contact.
- Remove the 4 guide pins - T40199- .
- Tighten bolts for mechatronic unit in specified sequence ⇒ page 83 .

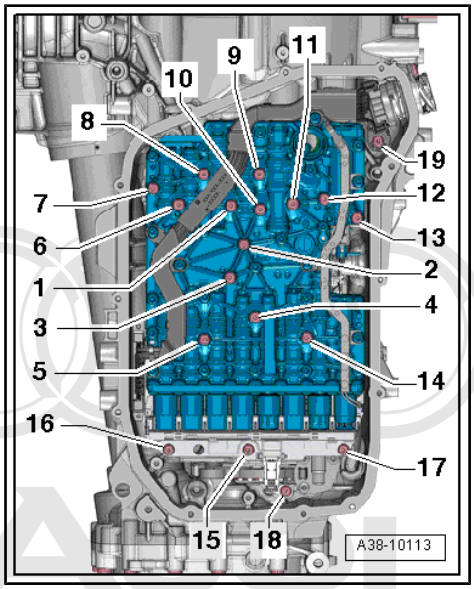

Protected by copyright. Copying for private or commercial purposes, in part or in whole, is not permitted unless authorised by AUDI AG. AUDI AG does not guarantee or accept any liability with respect to the correctness of information in this document. Copyright by AUDI AG.

All gearbox versions

Further assembly is carried out in reverse sequence; note the following:

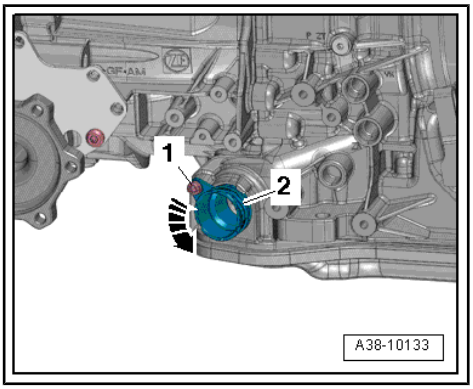

> **Caution**
>
> *The gearbox control unit (mechatronic unit) can be damaged by electrostatic discharge.*
>
> - *Before handling electrical connectors, mechanic must discharge static. To do so, touch an earthed metal object, such as a heater radiator or lifting platform, with your hand.*
> - *Do not touch contact pins in gearbox connector with bare hands.*

– Fit new connector housing -2- with lug pointing downwards and insert by turning clockwise (in opposite direction to arrow).

– Make sure that electrical connector is properly engaged and secured.

– Tighten bolt -1-.

– Remove cable tie -arrow-.

– Install ATF filter ⇒ page 70 .

– Install ATF oil pan ⇒ page 85 .

– Fill up with ATF ⇒ page 74 .

Tightening torques

♦ ⇒ “1.1 Exploded view - ATF system”, page 81

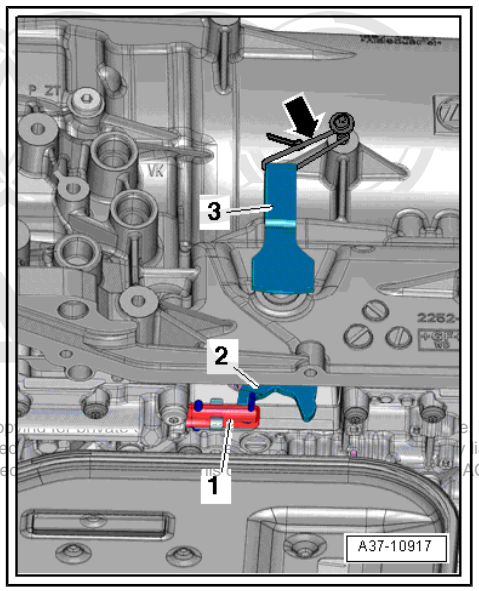

Protected by copyright. Copying for private or commercial purposes, in part or in whole, is not permitted unless authorised by AUDI AG. AUDI AG does not guarantee or assume any liability with respect to the correctness of information in this document.

39 – Final drive - differential

1 Final drive

⇒ “1.1 Exploded view - final drive”, page 96

⇒ “1.2 Renewing O-ring on cover for front final drive”, page 97

1.1 Exploded view - final drive

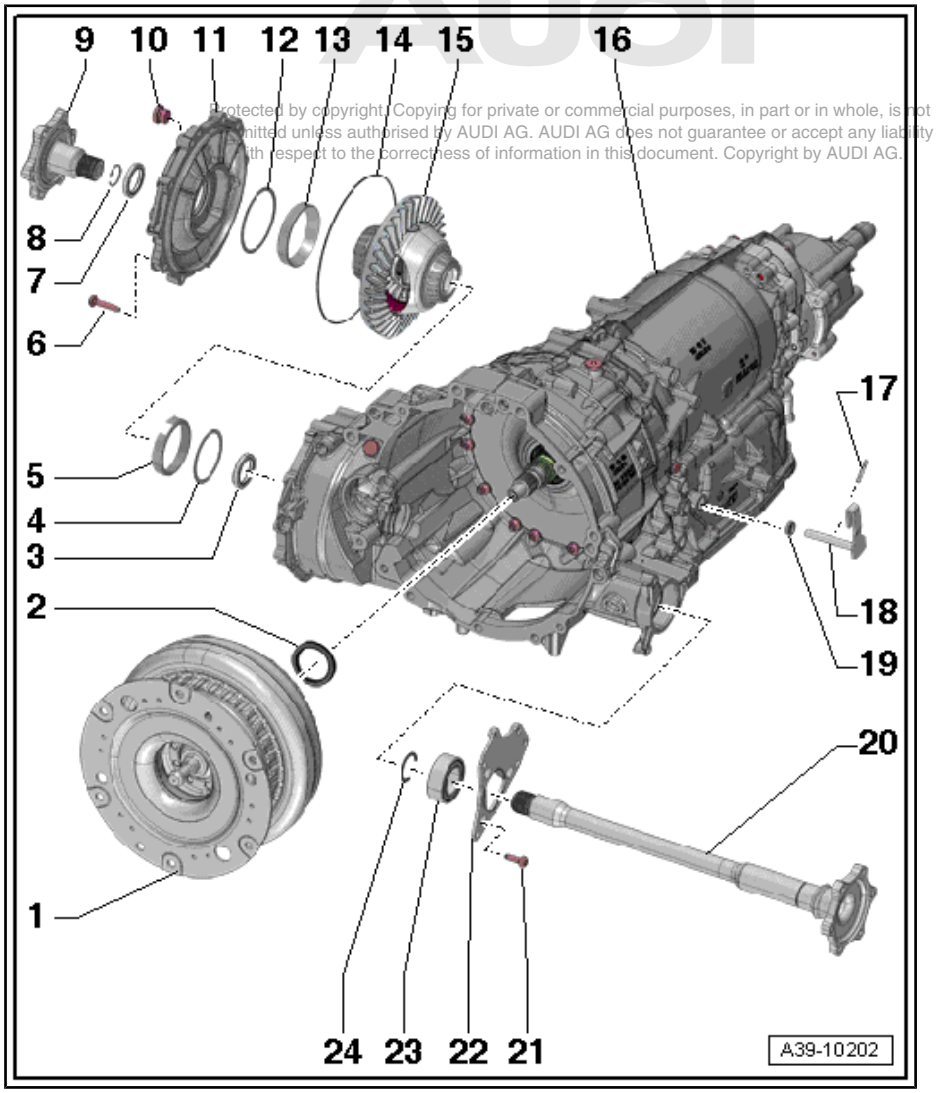

Protected by copyright. Copying for private or commercial purposes, in part or in whole, is not permitted unless authorised by AUDI AG. AUDI AG does not guarantee or accept any liability with respect to the correctness of information in this document. Copyright by AUDI AG.

1 - Torque converter
- ❑ Exploded view ⇒ page 14

2 - Oil seal
- ❑ For torque converter
- ❑ Removing and installing ⇒ page 18

3 - Oil seal
- ❑ For flange shaft (left-side)
- ❑ Between final drive and gearbox housing
- ❑ Renewing ⇒ page 104

4 - Shim
- ❑ Behind tapered roller bearing outer race

5 - Tapered roller bearing outer race

6 - Bolt
- ❑ Tightening torque and sequence ⇒ page 97

7 - Oil seal
- ❑ For flange shaft (right-side)
- ❑ Renewing ⇒ page 106

8 - Circlip
- ❑ Renew

9 - Flange shaft (right-side)
- ❑ Removing and installing ⇒ page 110

10 - Screw plug
- ❑ For inspection and filler hole
- ❑ For gear oil in front final drive
- ❑ Tightening torque ⇒ page 68

11 - Cover
- ❑ For front final drive
- ❑ Pay attention to dowel sleeves

12 - Shim
- ❑ Behind tapered roller bearing outer race

13 - Tapered roller bearing outer race

14 - O-ring

- ❑ On cover for front final drive
- ❑ Removing and installing ⇒ page 97

15 - Differential

16 - Gearbox

17 - Roll pin

- ❑ Removing and installing ⇒ “1.9 Renewing selector shaft oil seal”, page 42

18 - Gearbox selector lever

- ❑ Removing and installing ⇒ “1.9 Renewing selector shaft oil seal”, page 42

19 - Oil seal

- ❑ For gearbox selector lever
- ❑ Renewing ⇒ page 42

20 - Flange shaft (left-side)

- ❑ Removing and installing ⇒ page 109

21 - Bolt

- ❑ Renew
- ❑ 9 Nm +60°

22 - Bearing plate

- ❑ Secured to flange shaft (left-side) together with bearing ⇒ Item 23 (page 97) and retaining clip ⇒ Item 24 (page 97)
- ❑ This assembly is referred to as mounting bracket for flange shaft (left-side)

23 - Bearing

- ❑ For flange shaft (left-side)

Protected by copyright. Copying for private or commercial purposes, in part or in whole, is not permitted unless authorised by AUDI AG. AUDI AG does not guarantee or accept any liability with respect to the correctness of information in this document. Copyright by AUDI AG.

24 - Retaining clip

- ❑ For bearing for flange shaft (left-side)

Cover for front final drive - tightening torque and sequence

– Tighten bolts in 3 stages in the sequence shown:

Stage	Bolts	Tightening torque
1.	-1- and -12-	3 Nm
2.	-1 … 12-	27 Nm
3.	-13- and -14-	47 Nm

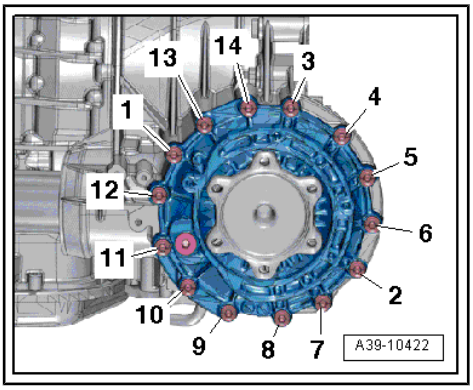

1.2 Renewing O-ring on cover for front final drive

Procedure

Note

- ♦ *⇒ “3.3 General repair instructions”, page 6* .
- ♦ *⇒ “3.1 Rules for cleanliness”, page 5* .

– Drain off gear oil in front final drive ⇒ page 101 .
– Remove flange shaft (right-side) ⇒ page 110 .
– Remove bolts securing cover for front final drive in the sequence -14 ... 1-.
– Remove cover for front final drive together with outer race for tapered roller bearing and shim.

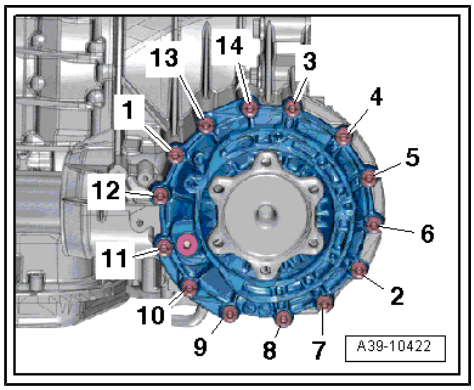

Note

Thickness of shim has been measured to fit; the shim must not be replaced with another shim of different thickness.

– Renew O-ring -arrow-.
– Install differential in gearbox housing.

Note the following if the outer race for tapered roller bearing and the shim have dropped out of the front final drive cover:

– Lubricate shim and outer race for tapered roller bearing with gear oil and insert in front final drive cover as far as the stop.

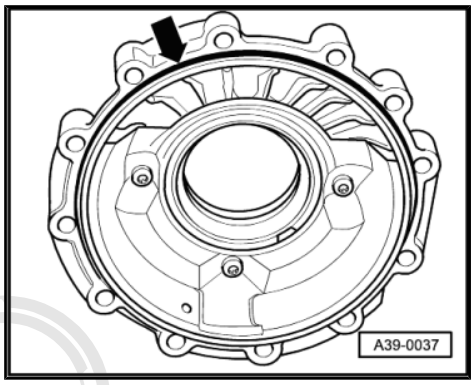

– Tighten bolts for front final drive cover.
– Install flange shaft (right-side) ⇒ page 110 .
– Fill up gear oil in gearbox after repairs ⇒ page 101 .

Tightening torques

♦ ⇒ Fig. ""Cover for front final drive - tightening torque and sequence"" , page 97

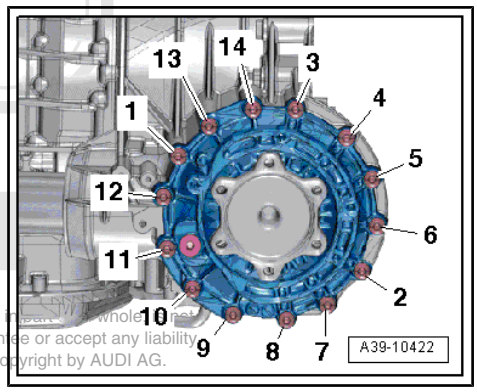

Protected by copyright. Copying for private or commercial purposes, in part or in whole, is not permitted unless authorised by AUDI AG. AUDI AG does not guarantee or accept any liability with respect to the correctness of information in this document. Copyright by AUDI AG.

2 Gear oil

⇒ “2.1 Checking gear oil level”, page 99

⇒ “2.2 Draining and filling gear oil”, page 101

2.1 Checking gear oil level

Special tools and workshop equipment required

- Used oil collection and extraction unit - VAS 6622-

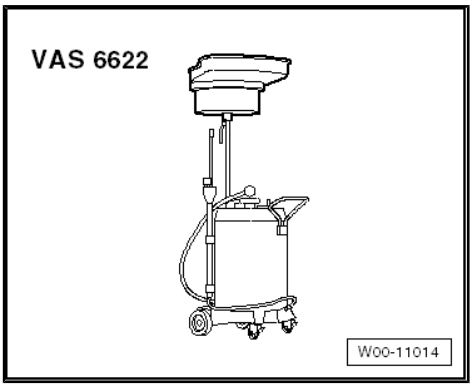

- Hand pump for filling gearbox - VAS 6617-

Protected by copyright. Copying for private or commercial purposes, in part or in whole, is not permitted unless authorised by AUDI AG. AUDI AG does not guarantee or accept any liability with respect to the correctness of information in this document. Copyright by AUDI AG.

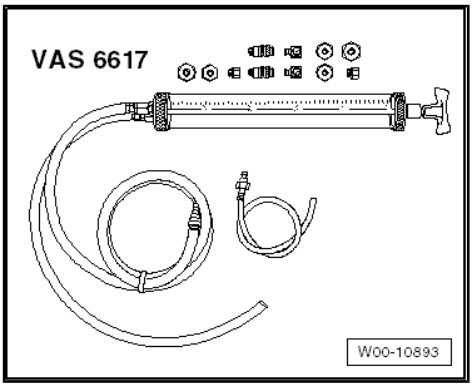

- Safety goggles

Procedure

- Gear oil about 20 °C (room temperature)
- Vehicle must be absolutely horizontal (on a four-pillar lifting platform or over an inspection pit).
- Gearbox is in position “P”.
- Parking brake button must be pulled up to apply the electro-mechanical parking brake.
- The vehicle must be stationary with the engine switched off for at least 15 minutes to allow the oil level to stabilise.

Note

- *⇒ “3.3 General repair instructions”, page 6* .
- *⇒ “3.1 Rules for cleanliness”, page 5* .
- *Renew plugs for inspection and filler holes.*

– Remove rear noise insulation -2- ⇒ General body repairs, exterior; Rep. gr. 66 ; Noise insulation; Removing and installing noise insulation .

– Remove rear section of wheel housing liner (front right) ⇒ General body repairs, exterior; Rep. gr. 66 ; Wheel housing liners; Removing and installing wheel housing liner (front) .

– Place used oil collection and extraction unit - VAS 6622- below gearbox.

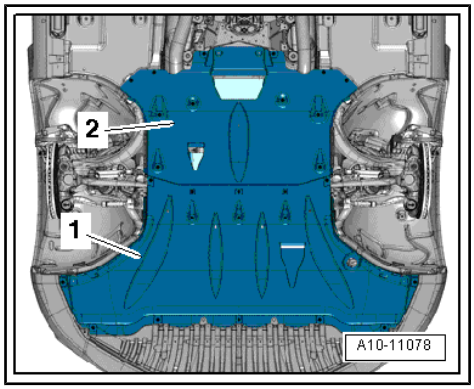

WARNING

Risk of eye injury.

- *Wear safety goggles.*

– Unscrew plug for inspection and filler hole -arrow A- on front final drive.

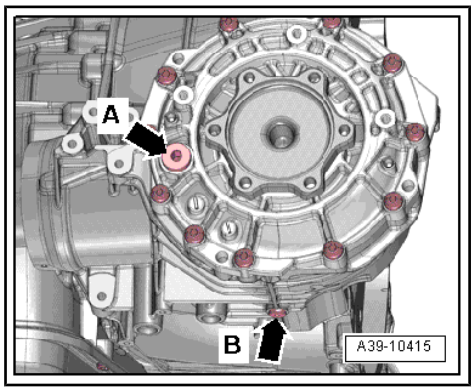

– Unscrew plug for inspection and filler hole -arrow A- on centre differential housing.

- Specification: The oil level is correct when the final drive (at front) and the transfer box (at rear) are filled up to the bottom lip of the filler hole.

If oil level is not up to bottom lip of filler hole, fill up gear oil
⇒ “2.2 Draining and filling gear oil”, page 101

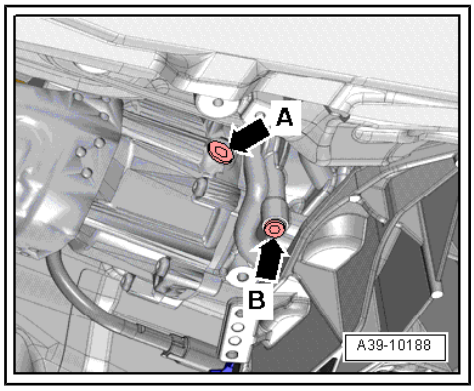

Note

- *The transfer box and the final drive have a common oil filling. This means that oil must be filled according to special instructions.*
- *Not following these instructions may cause damage to the differential.*

– Tighten new plug -arrow A- on final drive.

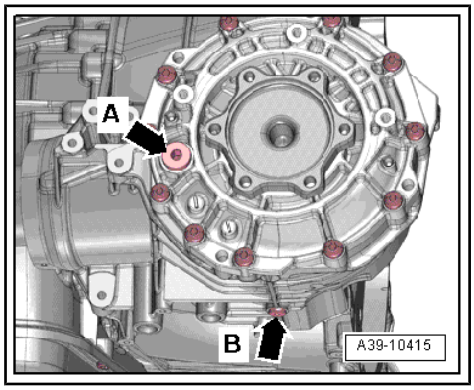

Protected by copyright. Copying for private or commercial purposes, in part or in whole, is not permitted unless authorised by AUDI AG. AUDI AG does not guarantee or accept any liability with respect to the correctness of information in this document. Copyright by AUDI AG.

– Tighten new plug -arrow A- on housing for centre differential.

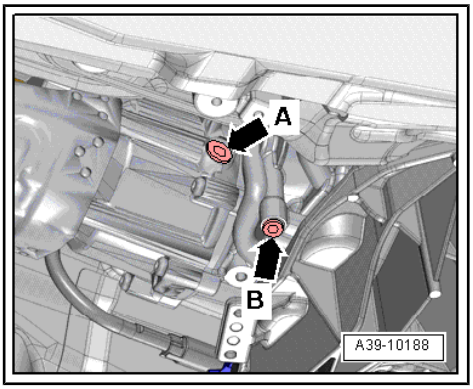

Tightening torques

- ⇒ page 68
- ⇒ General body repairs, exterior; Rep. gr. 66 ; Wheel housing liner; Exploded view - wheel housing liner (front)
- ⇒ General body repairs, exterior; Rep. gr. 66 ; Noise insulation; Exploded view - noise insulation

2.2 Draining and filling gear oil

> **Caution**
>
> - *Risk of damage to transfer box and front axle differential if gear oil level is incorrect.*
> - *The appropriate filling instructions MUST be adhered to as the oil level of the transfer box is dependent on the oil level of the front axle differential.*

Special tools and workshop equipment required

- Used oil collection and extraction unit - VAS 6622-

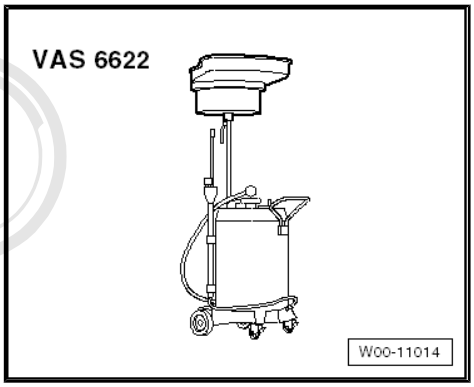

- Hand pump for filling gearbox - VAS 6617-

Protected by copyright. Copying for private or commercial purposes, in part or entirely, is not permitted unless authorised by AUDI AG. AUDI AG does not guarantee or accept any liability with respect to the correctness of information in this document. Copyright by AUDI AG.

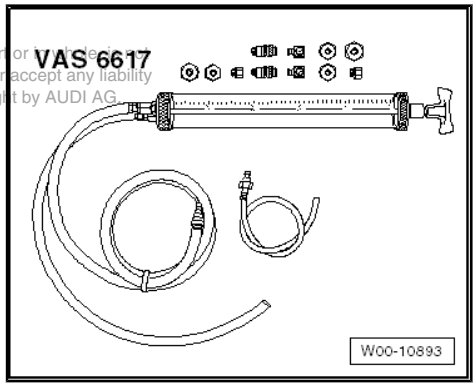

- Safety goggles

Draining

- Engine not running.
- Vehicle must be absolutely horizontal (on a four-pillar lifting platform or over an inspection pit).

- Gearbox is in position “P”.
- Parking brake button must be pulled up to apply the electro-mechanical parking brake.

Note

- ⇒ *“3.3 General repair instructions”, page 6* .
- ⇒ *“3.1 Rules for cleanliness”, page 5* .
- *Always adhere to waste disposal regulations.*
- *Renew drain plugs with seals.*

Protected by copyright. Copying for private or commercial purposes, in part or in whole, is not permitted unless authorised by AUDI AG. AUDI AG does not guarantee or accept any liability with respect to the correctness of information in this document. Copyright by AUDI AG.

– Remove rear section of wheel housing liner (front right) ⇒ General body repairs, exterior; Rep. gr. 66 ; Wheel housing liners; Removing and installing wheel housing liner (front) .

– Remove rear noise insulation -2- ⇒ General body repairs, exterior; Rep. gr. 66 ; Noise insulation; Removing and installing noise insulation .

– Place used oil collection and extraction unit - VAS 6622- below gearbox.

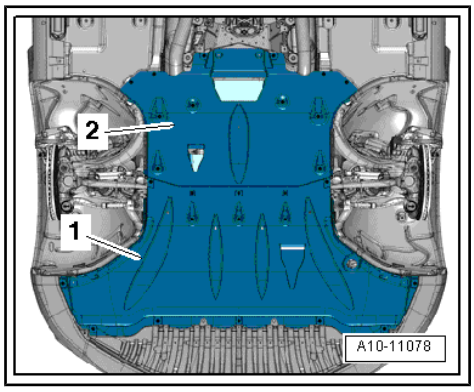

WARNING

Risk of eye injury.

- *Wear safety goggles.*

– Unscrew drain plug -arrow B- and inspection plug -arrow A- on front final drive and drain off gear oil.

– Tighten new drain plug on front final drive -arrow B-.

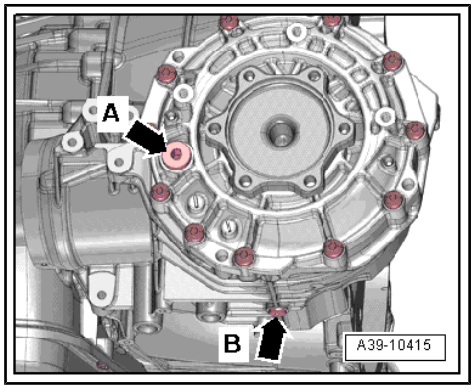

– Unscrew drain plug -arrow B- and inspection plug -arrow A- on centre differential housing and drain off gear oil.

– Tighten new drain plug on centre differential housing -arrow B-.

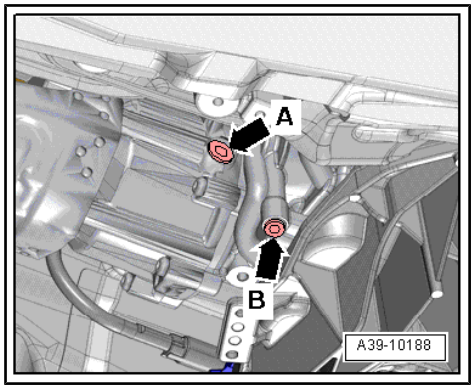

Caution

Risk of damage to gearbox

- *The engine must not be started when there is no gear oil in the transfer box.*

Filling up and adjusting oil level

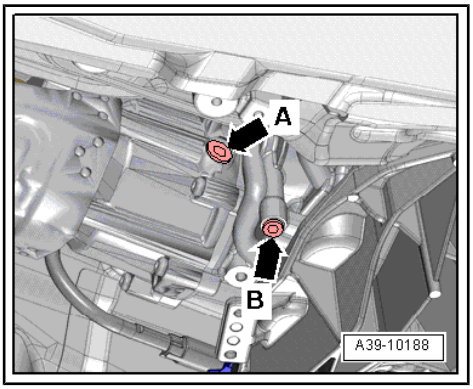

- Gear oil about 20 °C (room temperature)

– Screw adapter - VAS 6617/6- hand-tight into inspection hole for transfer box -arrow A- using adapter - VAS 6617/2- and fill up to bottom lip of inspection hole with gear oil. Do not close inspection hole yet. Gear oil specifications ⇒ Electronic parts catalogue

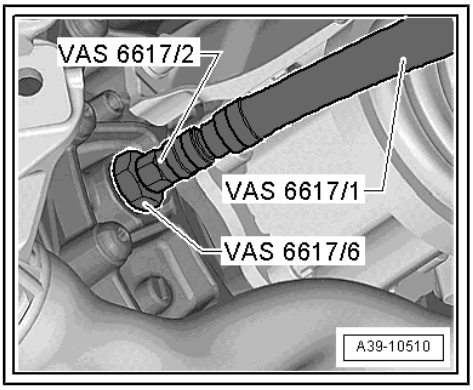

– Screw adapter - VAS 6617/6- hand-tight into inspection hole for front final drive using adapter - VAS 6617/2- and fill up to bottom lip of inspection hole with gear oil.

– Then overfill with approx. 1 ltr. gear oil at front.

– Wait to allow an equalisation period until gear oil emerges from inspection hole for transfer box (at rear).

– Seal inspection hole for transfer box (at rear) as soon as oil emerges.

– Then detach adapter - VAS 6617/6- from gearbox and allow excess gear oil to drain off at front of final drive.

– Tighten both inspection plugs.

Note

- ♦ *The overfilling of the transfer box that results is not a problem.*
- ♦ *It ensures that enough gear oil flows from the front final drive to the rear of the transfer box as part of the internal oil level balancing system.*

Tightening torques

- ♦ ⇒ page 68
- ♦ ⇒ General body repairs, exterior; Rep. gr. 66 ; Wheel housing liner; Exploded view - wheel housing liner (front)
- ♦ ⇒ General body repairs, exterior; Rep. gr. 66 ; Noise insulation; Exploded view - noise insulation

Protected by copyright. Copying for private or commercial purposes, in part or in whole, is not permitted unless authorised by AUDI AG. AUDI AG does not guarantee or accept any liability with respect to the correctness of information in this document. Copyright by AUDI AG.

3 Oil seals

⇒ "3.1 Renewing oil seal (left-side)", page 104
⇒ "3.2 Renewing oil seal (right-side)", page 106

3.1 Renewing oil seal (left-side)

Note

A defective oil seal allows gear oil to enter the torque converter bellhousing.

Special tools and workshop equipment required

- Oil seal extractor lever - VW 681- or extractor tool -T20143/2-

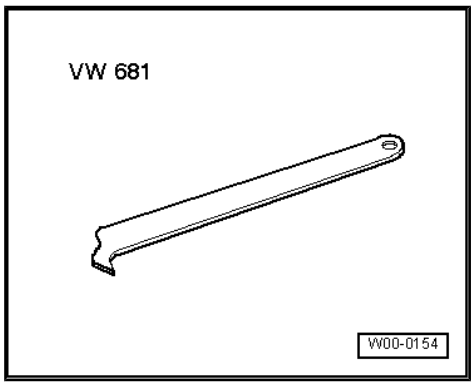

- Thrust piece - T10139-

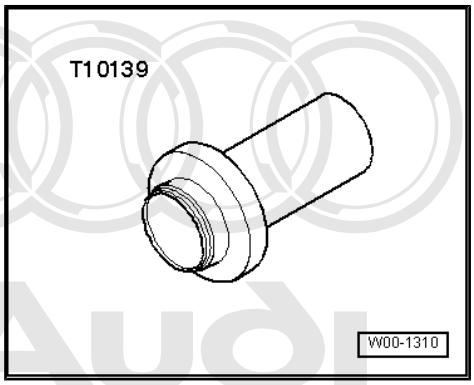

Protected by copyright. Copying for private or commercial purposes, in part or in whole, is not permitted unless authorised by AUDI AG. AUDI AG does not guarantee or accept any liability with respect to the correctness of information in this document. Copyright by AUDI AG.

Procedure

- Gearbox must be removed and secured to engine/gearbox support ⇒ page 66 .

Caution

Risk of damage to gearbox components if gearbox is not supported correctly when removed.

- ***The gearbox must not be placed down on the ATF cooler or ATF oil pan.***

Note

- *⇒ "3.3 General repair instructions", page 6 .*
- *⇒ "3.1 Rules for cleanliness", page 5 .*

– Drain off gear oil in front final drive ⇒ page 101 .
– Remove flange shaft (right-side) ⇒ page 110 .
– Remove bolts securing cover for front final drive in the sequence -14 ... 1-.
– Remove cover for front final drive together with outer race for tapered roller bearing and shim.

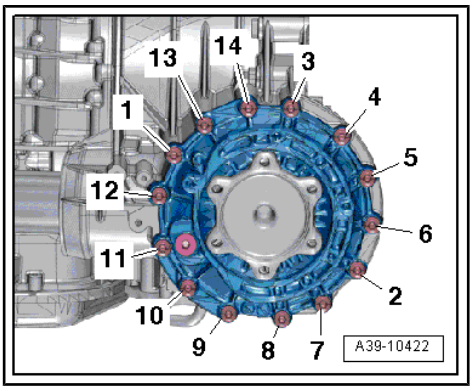

Note

Thickness of shim has been measured to fit; the shim must not be replaced with another shim of different thickness.

– Remove differential -arrow-.

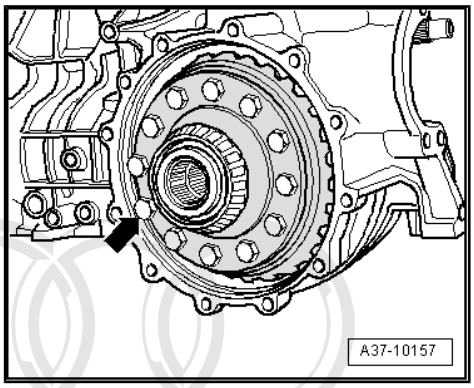

– Remove tapered roller bearing outer race -1- for differential and shim -2- (behind outer race) from gearbox housing by hand.

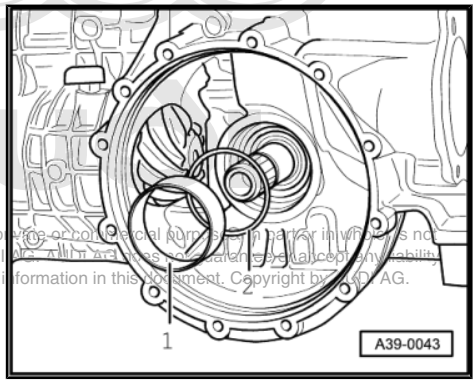

Note

Thickness of shim has been measured to fit; the shim must not be replaced with another shim of different thickness.

Protected by copyright. Copying for private or commercial purposes, in part or in whole, is not permitted unless authorised by AUDI AG. AUDI AG does not guarantee or assume any liability with respect to the correctness of information in this document. Copyright by AUDI AG.

– Remove flange shaft (left-side) ⇒ page 109 .
– Pull out oil seal.

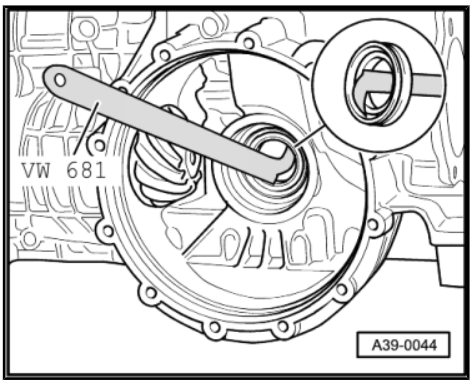

Note

The oil seal extractor lever must be applied behind the two sealing lips of the oil seal. Do not position at outer circumference of oil seal as the contact surface in the gearbox housing could be damaged. Guide the lever carefully when removing the seal.

– Examine oil seal seat in gearbox housing for damage; reface surface if necessary.

– Lightly lubricate outer circumference and sealing lip of oil seal with gear oil.

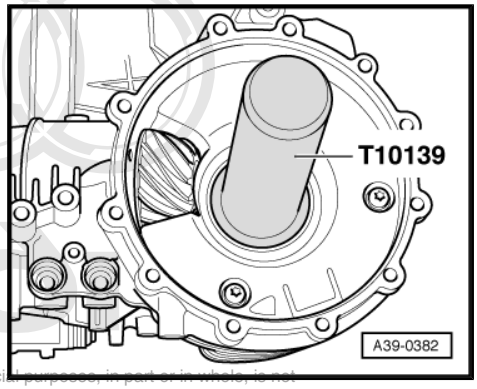

Note

Push oil seal onto thrust piece with the protruding sealing lip on the oil seal facing towards the tool.

– Drive in new oil seal as far as stop.

Protected by copyright. Copying for private or commercial purposes, in part or in whole, is not permitted unless authorised by AUDI AG. AUDI AG does not guarantee or accept any liability with respect to the correctness of information in this document. Copyright by AUDI AG.

– Insert shim -2- and tapered roller bearing outer race -1- for differential onto stop in gearbox housing by hand.

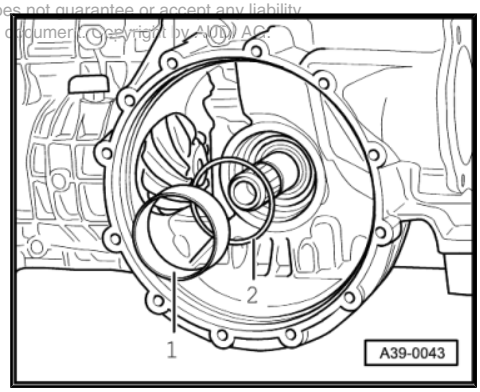

– Renew O-ring -arrow-.

– Install differential in gearbox housing.

Note the following if the outer race for tapered roller bearing and the shim have dropped out of the front final drive cover:

– Lubricate shim and outer race for tapered roller bearing with gear oil and insert in front final drive cover as far as the stop.

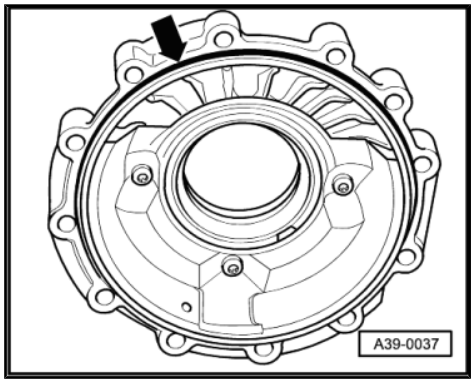

– Tighten bolts for front final drive cover ⇒ page 97 .

– Install flange shaft (left-side) ⇒ page 109 .

– Install flange shaft (right-side) ⇒ page 110 .

– Fill up gear oil in gearbox after repairs ⇒ page 101 .

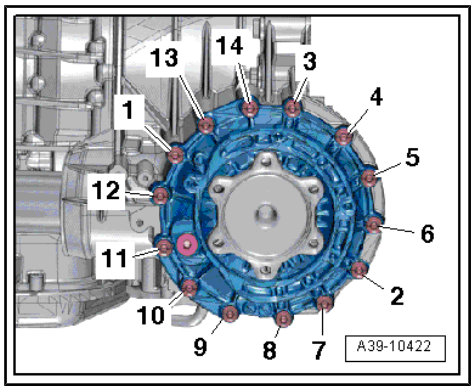

3.2 Renewing oil seal (right-side)

Special tools and workshop equipment required

- Used oil collection and extraction unit - VAS 6622-

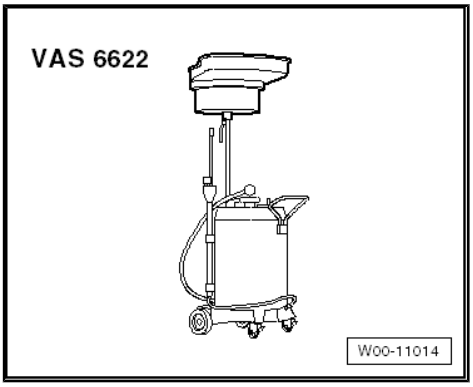

- Oil seal extractor lever - VW 681- or extractor tool -T20143/2-

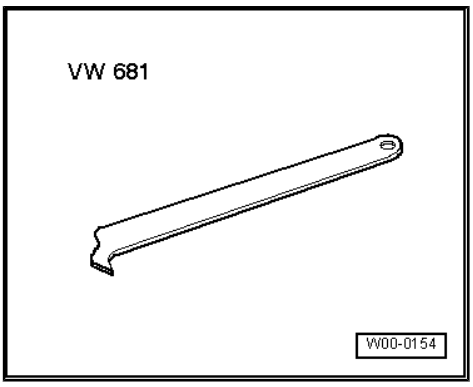

- Thrust piece - T40189-

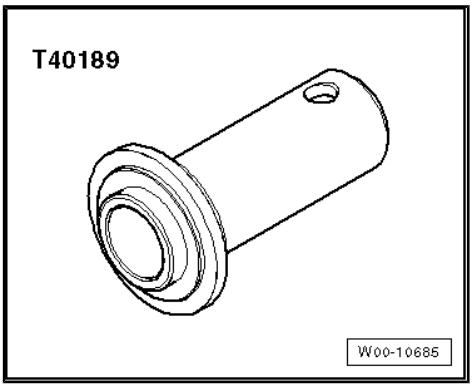

Procedure

Note

- ⇒ *"3.3 General repair instructions", page 6* .
- ⇒ *"3.1 Rules for cleanliness", page 5* .

– Place used oil collection and extraction unit - VAS 6622- below gearbox.

– Remove flange shaft (right-side) ⇒ page 110 .

Protected by copyright. Copying for private or commercial purposes, in part or in whole, is not permitted unless authorised by AUDI AG. AUDI AG does not guarantee or accept any liability with respect to the correctness of information in this document. Copyright by AUDI AG.

– Pull out oil seal for flange shaft (right-side).

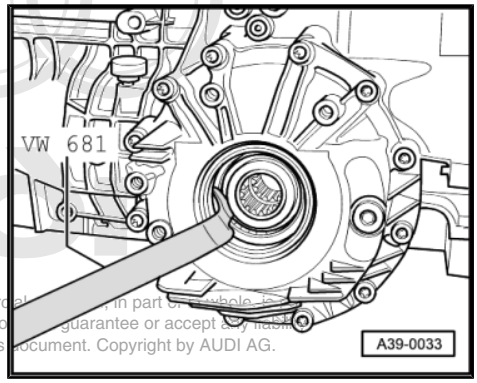

Protected by copyright. Copying for private or commercial purposes, in part or in whole, is not permitted unless authorised by AUDI AG. AUDI AG does not guarantee or accept any liability with respect to the correctness of information in this document. Copyright by AUDI AG.

– Lubricate outer circumference of new oil seal with gear oil.

• Installation position: the open side of the oil seal should face the gearbox.

– Drive in new oil seal as far as stop. Make sure that oil seal always remains straight when driving in.

– Install flange shaft (right-side) ⇒ page 110 .

– Fill up gear oil in gearbox after repairs ⇒ page 101 .

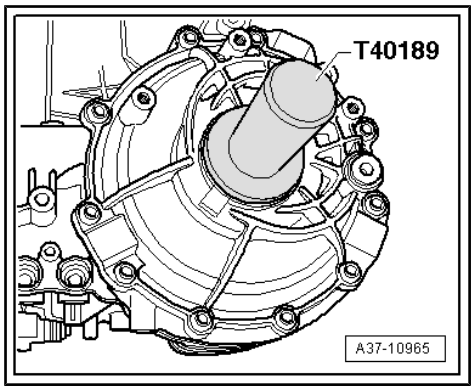

4 Differential

⇒ "4.1 Removing and installing flange shaft (left-side)", page 109

⇒ "4.2 Removing and installing flange shaft (right-side)", page 110

4.1 Removing and installing flange shaft (left-side)

Special tools and workshop equipment required

♦ Sealing grease - G 052 128 A1-

Removing

• Gearbox is secured to engine and gearbox support - VAS 6095- ⇒ page 66 .

– Tilt gearbox to rear on engine and gearbox support to prevent gear oil from escaping.

– Unscrew bolts -arrows- on mounting bracket for flange shaft.

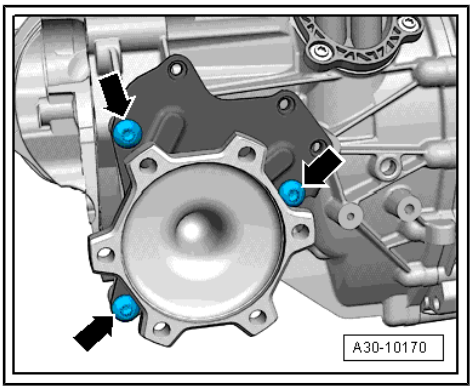

– Remove flange shaft (left-side) -1- from gearbox in direction of -arrow A-.

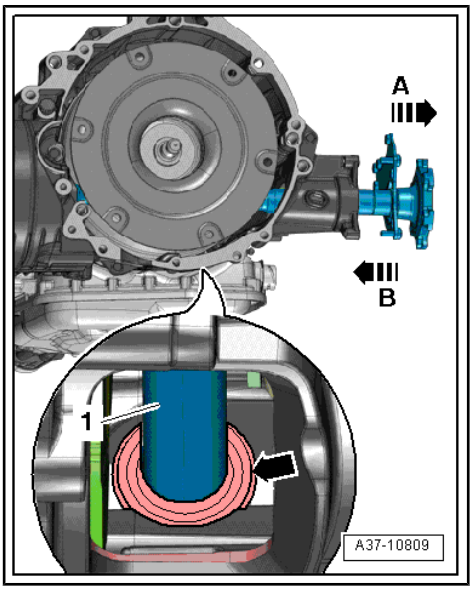

Note

-Arrow B- can be disregarded.

– Remove torque converter ⇒ page 14 .

Protected by copyright. Copying for private or commercial purposes, in part or in whole, is not permitted unless authorised by AUDI AG. AUDI AG does not guarantee or accept any liability with respect to the correctness of information in this document. Copyright by AUDI AG.

Installing

Installation is carried out in reverse sequence; note the following:

– Thoroughly clean flange shaft (left-side), area of torque converter bellhousing leading to differential -arrow A-, and oil seal -arrow B-.

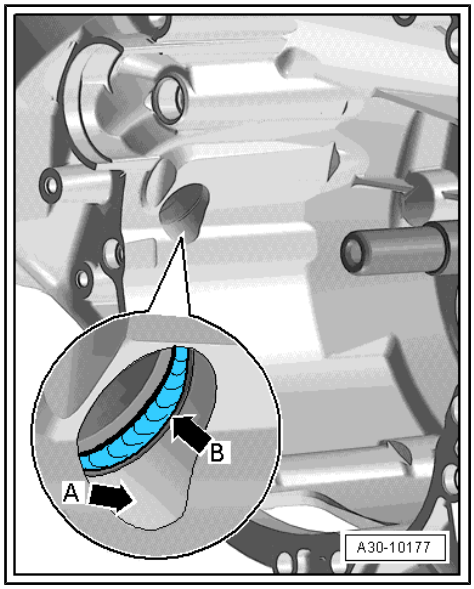

Note

If oil seal between differential and gearbox housing -arrow B- is damaged, it must be renewed ⇒ page 96 .

– Pack space between sealing lip and dust lip half-full with sealing grease - G 052 128 A1- .

– Install torque converter ⇒ page 14 .

– Slide flange shaft (left-side) -1- into gearbox in direction of -arrow B- (keep end of shaft centred while guiding it into oil seal on front final drive -arrow-).

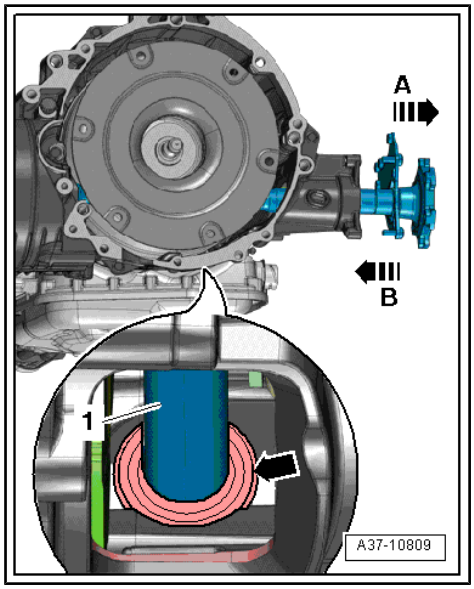

Note

- *The splines on the flange shaft will damage the oil seal -arrow- between the final drive and the gearbox housing if you do not keep the flange shaft centred.*
- *If the oil seal is damaged, it must be renewed.*
- *-Arrow A- can be disregarded.*

– Tighten flange shaft mounting bracket -arrows-.

– After installing gearbox refer to ⇒ page 99 .

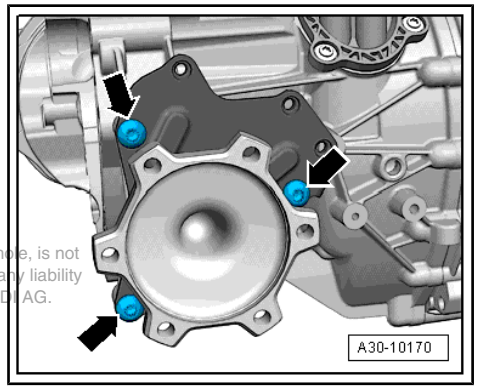

Tightening torques

- ⇒ “1.1 Exploded view - final drive”, page 96

Protected by copyright. Copying for private or commercial purposes, in part or in whole, is not permitted unless authorised by AUDI AG. AUDI AG does not guarantee or accept any liability with respect to the correctness of information in this document. Copyright by AUDI AG.

4.2 Removing and installing flange shaft (right-side)

Special tools and workshop equipment required

- Drift - VW 295-

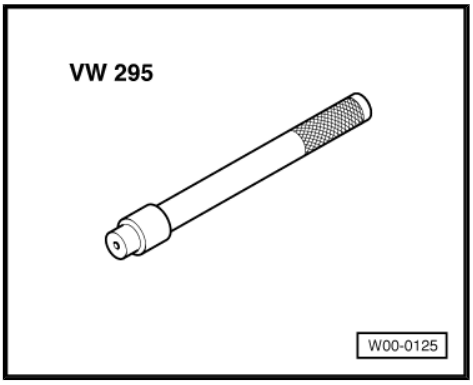

- Multi-purpose tool - VW 771-

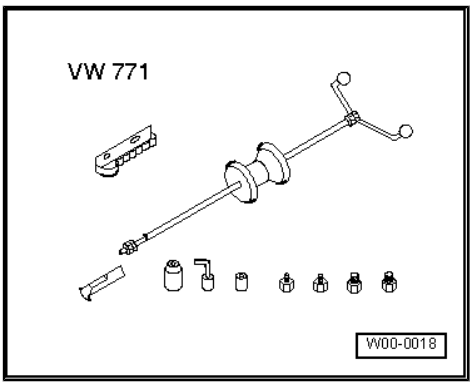

- Counterhold tool - 3419-

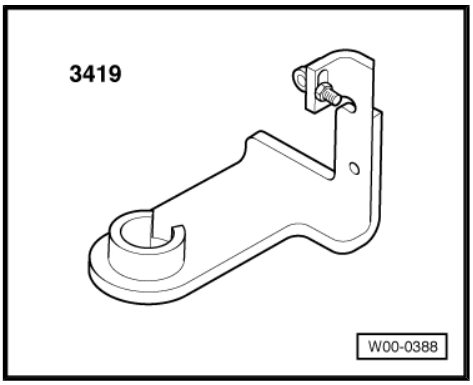

- Used oil collection and extraction unit - VAS 6622-

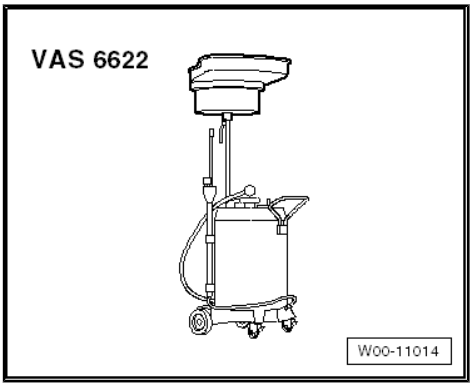

Protected by copyright. Copying for private or commercial purposes, in part or in whole, is not permitted unless authorised by AUDI AG. AUDI AG does not guarantee or accept any liability with respect to the correctness of information in this document. Copyright by AUDI AG.

- Nut M10 (2x)
- Sealing grease - G 052 128 A1-

Removing

– Remove rear noise insulation -2- ⇒ General body repairs, exterior; Rep. gr. 66 ; Noise insulation; Removing and installing noise insulation .

– Remove rear section of wheel housing liner (front right) ⇒ General body repairs, exterior; Rep. gr. 66 ; Wheel housing liners; Removing and installing wheel housing liner (front) .

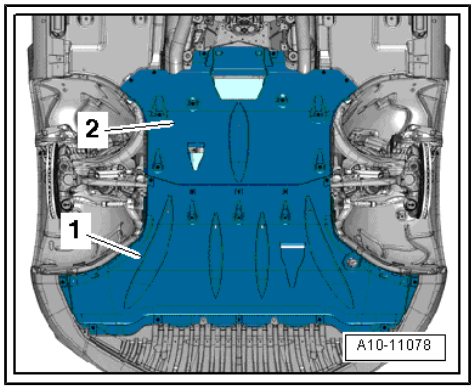

– Remove bolts -arrows- and detach heat shield for drive shaft (right-side).

– Unbolt drive shaft (right-side) from gearbox flange shaft and move it towards rear ⇒ Running gear, axles, steering; Rep. gr. 40 ; Drive shaft; Removing and installing drive shaft .

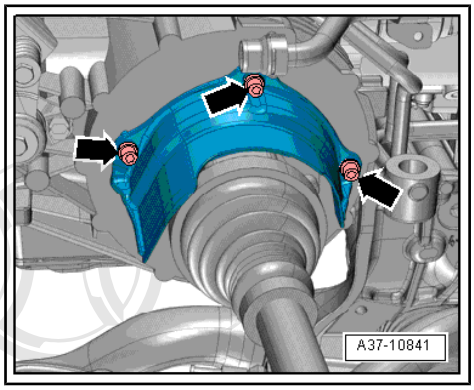

– Place used oil collection and extraction unit - VAS 6622- below gearbox.

– Screw eye bolt from counterhold tool - 3419- into one of the threaded holes on flange shaft (right-side) with 2 nuts M10 -item 1- attached.

– Attach multi-purpose tool - VW 771- with - VW 771/13- to eye bolt and pull flange shaft off gearbox.

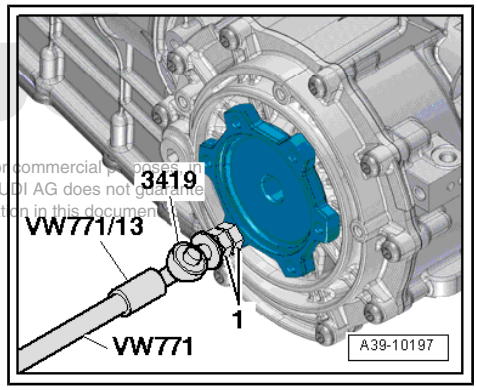

Protected by copyright. Copying for private or commercial purposes, in part or in whole, is not permitted unless authorised by AUDI AG. AUDI AG does not guarantee with respect to the correctness of information in this document.

Installing

Installation is carried out in reverse sequence; note the following:

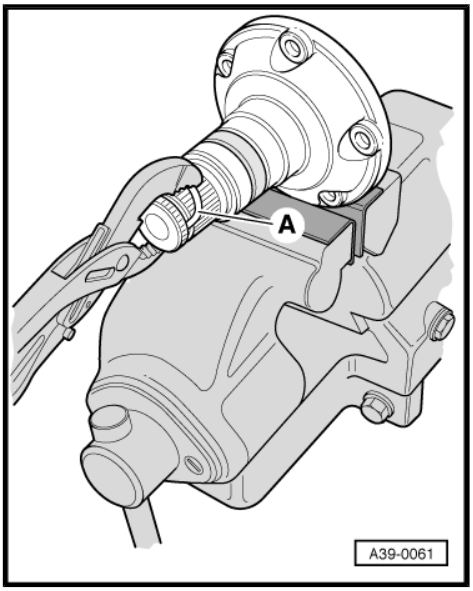

Note

Renew circlip for flange shaft (right-side).

- Clamp flange shaft in vice, using jaw protectors. Use new circlip -A- to press old circlip out of groove in flange shaft.
- Check flange shaft oil seal (right-side) for damage and renew if necessary ⇒ page 106 .
- Pack space between sealing lip and dust lip half-full with sealing grease - G 052 128 A1- .
- Drive in flange shaft (right-side) with drift - VW 295- .
- Check oil level in front final drive and top up as required ⇒ page 99 .

Tightening torques

- Drive shaft and heat shield ⇒ Running gear, axles, steering; Rep. gr. 40 ; Drive shaft; Exploded view - drive shaft

Protected by copyright. Copying for private or commercial purposes, in part or in whole, is not permitted unless authorised by AUDI AG. AUDI AG does not guarantee or accept any liability with respect to the correctness of information in this document. Copyright by AUDI AG.

5 Centre differential

⇒ “5.1 Exploded view - centre differential”, page 114
⇒ “5.2 Removing and installing centre differential”, page 115
⇒ “5.3 Renewing oil seal for rear splined shaft”, page 117
⇒ “5.4 Renewing ball bearing for rear splined shaft”, page 119
⇒ “5.5 Renewing ball bearing for centre differential”, page 122

5.1 Exploded view - centre differential

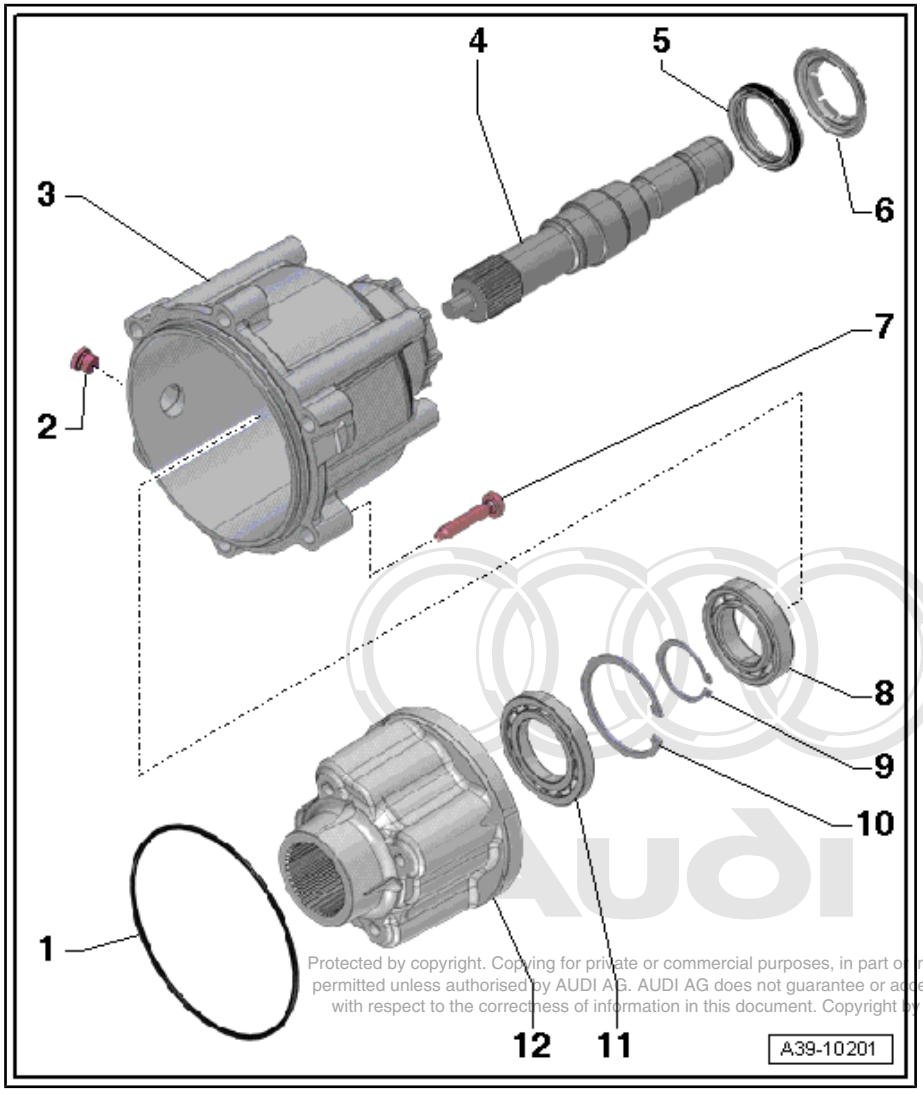

Protected by copyright. Copying for private or commercial purposes, in part or in whole, is not permitted unless authorised by AUDI AG. AUDI AG does not guarantee or accept any liability with respect to the correctness of information in this document. Copyright by AUDI AG.

1 - O-ring
- ❑ Renew
- ❑ Lubricate with gear oil

2 - Screw plug
- ❑ For inspection and filler hole
- ❑ For gear oil in transfer box
- ❑ Tightening torque ⇒ page 68

3 - Centre differential housing
- ❑ Removing and installing ⇒ page 115

4 - Rear splined shaft
- ❑ Removing and installing ⇒ “5.3 Renewing oil seal for rear splined shaft”, page 117
- ❑ Renew oil seal when renewing rear splined shaft

5 - Oil seal
- ❑ For rear splined shaft
- ❑ Renewing ⇒ page 117

6 - Dust ring
- ❑ Cannot be removed without being damaged

7 - Bolt
- ❑ Renew
- ❑ Tightening torque and sequence ⇒ page 115

8 - Ball bearing
- ❑ For rear splined shaft
- ❑ Renewing ⇒ page 119

9 - Circlip
- ❑ For rear splined shaft

10 - Circlip
- ❑ For ball bearing for rear splined shaft

11 - Ball bearing
- ❑ For centre differential

❑ Renewing ⇒ page 122

12 - Centre differential

Centre differential housing - tightening torque and sequence

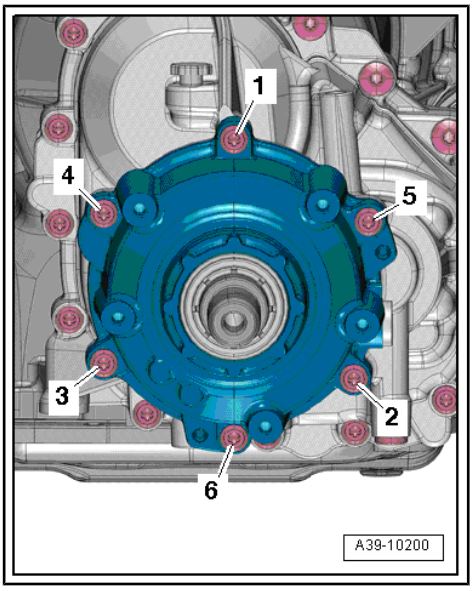

Note

Renew the bolts for the centre differential housing.

– Tighten bolts in 3 stages in the sequence shown:

Stage	Bolts	Tightening torque/tightening angle
1.	-1- and -6-	3 Nm
2.	-1 … 6-	10 Nm
3.	-1 … 6-	Turn 90° further

5.2 Removing and installing centre differential

Removing

- Gearbox installed

Caution

Risk of damage to gearbox

- *Do not run the engine or tow the vehicle if the centre differential has been removed or if the gear oil has been drained.*

Note

- *⇒ "3.3 General repair instructions", page 6* .
- *⇒ "3.1 Rules for cleanliness", page 5* .

– Remove propshaft ⇒ Final drive; Rep. gr. 39 ; Propshaft; Removing and installing propshaft .

Protected by copyright. Copying for private or commercial purposes, in part or in whole, is not permitted unless authorised by AUDI AG. AUDI AG does not guarantee or accept any liability with respect to the correctness of information in this document.

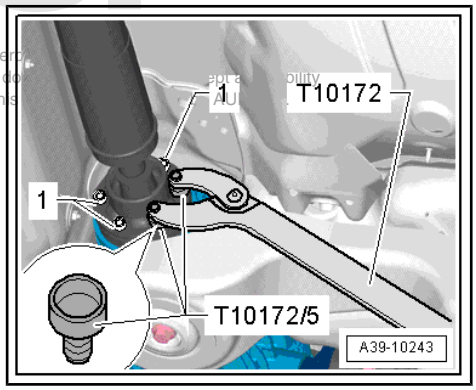

– Remove tunnel cross member ⇒ page 61 .

– Drain off gear oil in transfer box ⇒ page 101 .

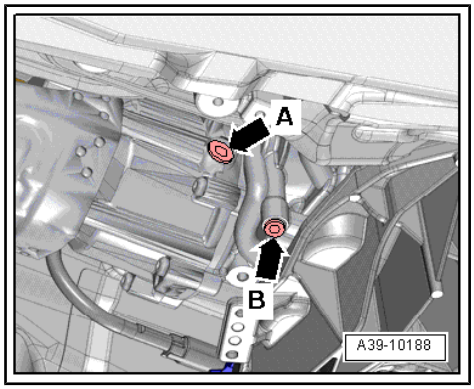

– Slacken bolts securing centre differential housing in the sequence -6 ... 1- and remove bolts.

Caution

Gearbox components must be handled with care, otherwise they will be damaged.

- *Detach centre differential housing from gearbox carefully towards the rear. Take care that centre differential does not drop out of gearbox.*

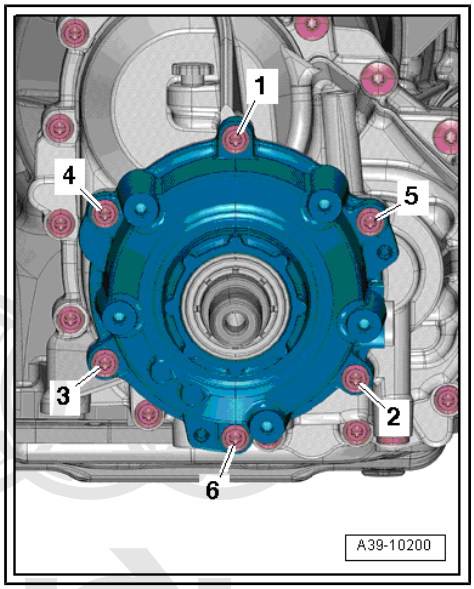

– Secure centre differential -1- to prevent it from falling out, or pull it off output shaft towards rear.

Installing

Installation is carried out in reverse sequence; note the following:

Protected by copyright. Copying for private or commercial purposes, in part
permitted unless authorised by AUDI AG. AUDI AG does not guarantee or
with respect to the correctness of information in

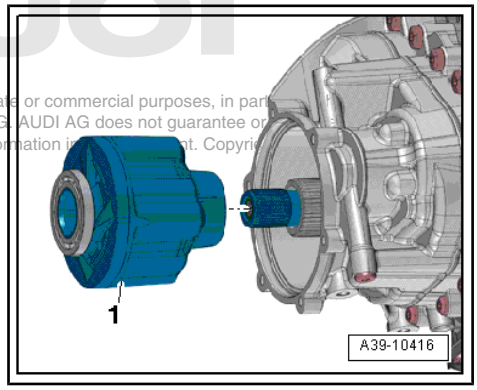

Note

Renew O-ring for centre differential housing.

If centre differential has been removed -1-:

– Fit centre differential onto splines of output shaft. At the same time turn centre differential slightly.

– Check whether centre differential can be turned by hand after being fitted.

– Fit housing with new O-ring and rear splined shaft installed onto centre differential. Turn housing slightly if necessary.

– Tighten bolts for centre differential housing ⇒ page 115 .
– Install propshaft ⇒ Final drive; Rep. gr. 39 ; Propshaft; Removing and installing propshaft .
– Install tunnel cross member ⇒ page 61 .
– Fill up gear oil in transfer box ⇒ page 101

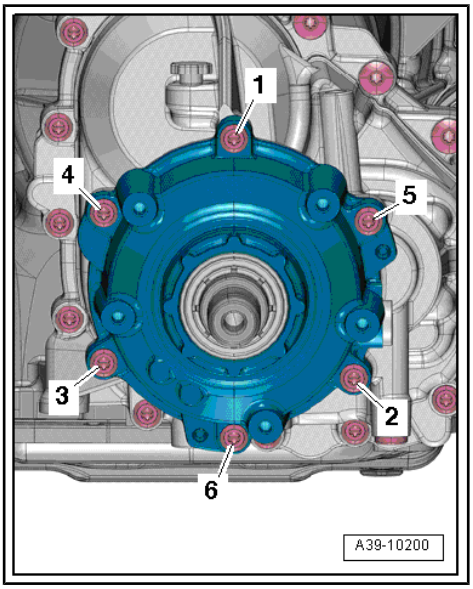

5.3 Renewing oil seal for rear splined shaft

Special tools and workshop equipment required

♦ Extractor tool -T20143/1-

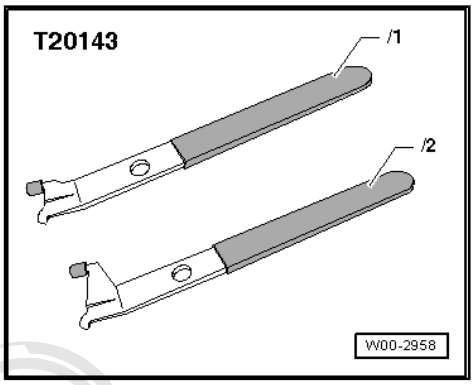

♦ Assembly tool - T40239-
♦ Sealing grease - G 052 128 A1-

Procedure

Note

♦ *⇒ "3.3 General repair instructions", page 6* .
♦ *⇒ "3.1 Rules for cleanliness", page 5* .

– Remove propshaft ⇒ Final drive; Rep. gr. 39 ; Propshaft; Removing and installing propshaft .

Protected by copyright. Copying for private or commercial purposes, in part or in whole, is not permitted unless authorised by AUDI AG. AUDI AG does not guarantee or assume any liability with respect to the correctness of information in this document. Copyright by AUDI AG.

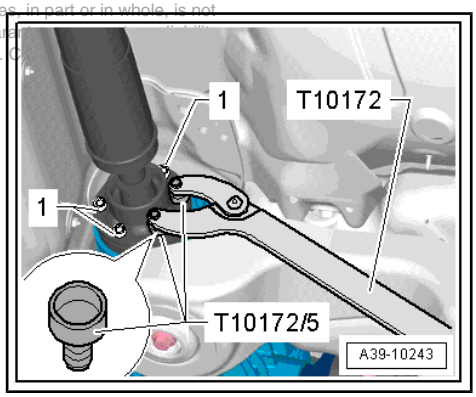

– Pry off dust ring -1-.

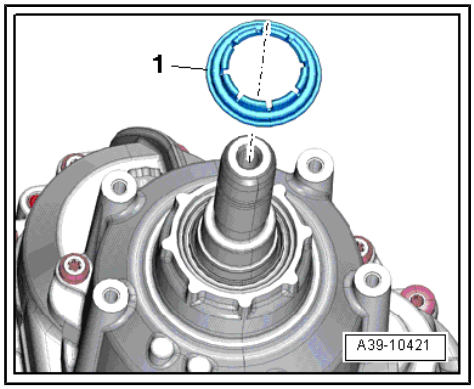

Note

The dust ring cannot be removed without being damaged.

– Pull out oil seal for rear splined shaft.
– Clean contact surface and sealing surface.
– Lubricate outer circumference of seal with gear oil.

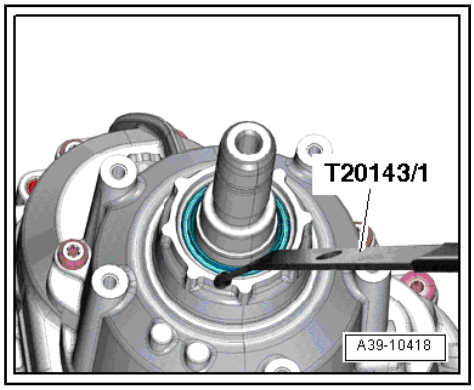

– Fit guide sleeve - T40239/1- -item 1- onto rear splined shaft.
– Pack space between sealing lip and dust lip half-full with sealing grease - G 052 128 A1- .
– Push oil seal -2- over guide sleeve -item 1- and onto rear splined shaft.
• Installation position: the open side of the seal should face the gearbox housing.

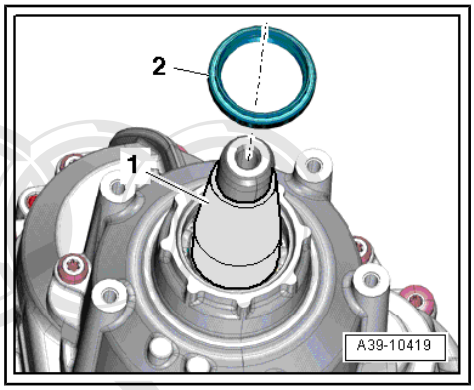

– Drive in oil seal as far as stop using thrust piece - T40239- , -item 1-. Make sure oil seal remains straight.

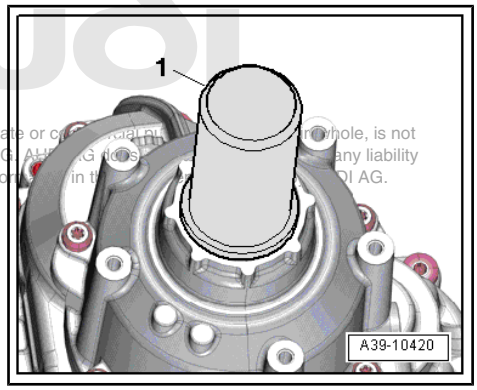

Note

Pull guide sleeve - T40239/1- carefully out of oil seal so that sealing lip is not rolled back.

Protected by copyright. Copying for private or c[illegible] whole, is not permitted unless authorised by AUDI AG. [illegible] any liability with respect to the correctness of info[illegible] in t[illegible] AG.

– Clip on new dust ring -1-.
– Install propshaft ⇒ Final drive; Rep. gr. 39 ; Propshaft; Removing and installing propshaft .

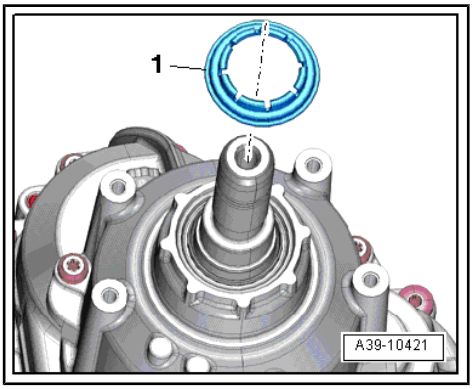

5.4 Renewing ball bearing for rear splined shaft

Special tools and workshop equipment required

- Thrust plate - VW 401-
- Thrust plate - VW 402-
- Press tool - VW 412-
- Tube - 2040-
- Tube - VW 415 A-

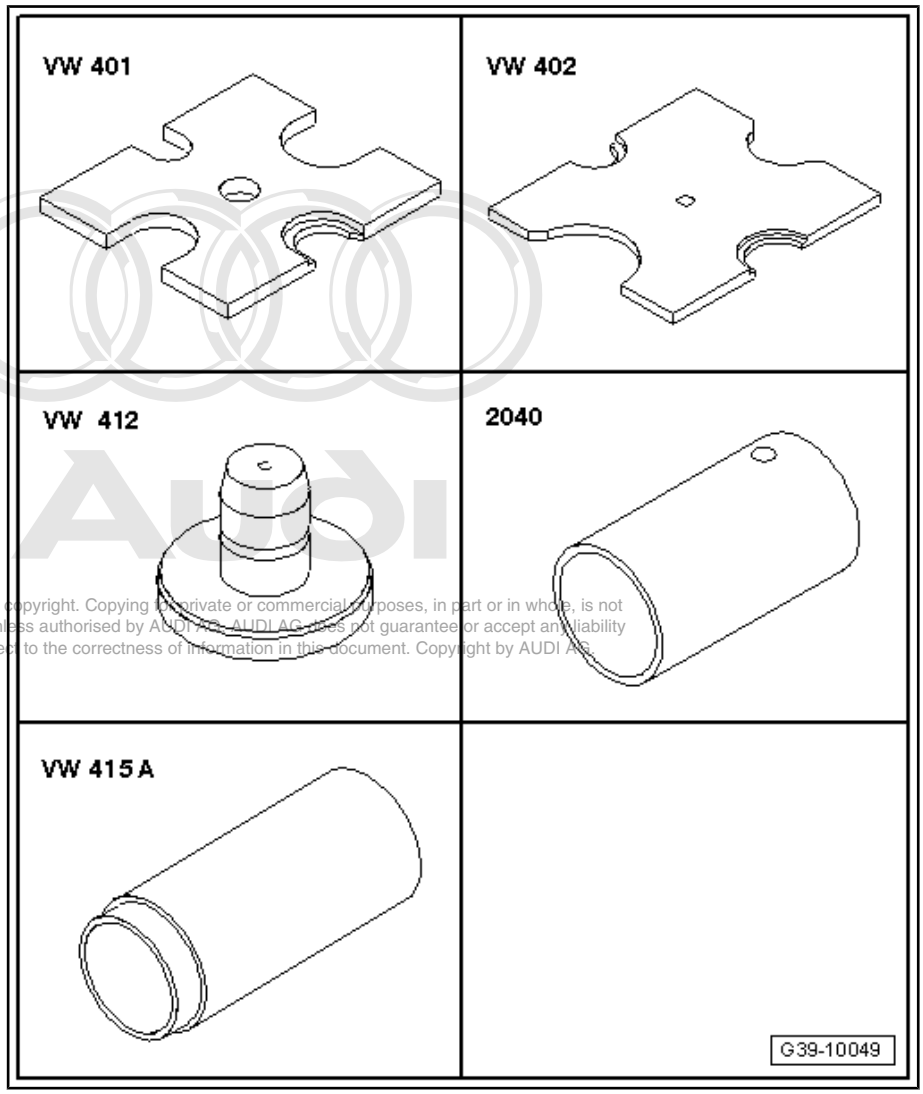

Protected by copyright. Copying for private or commercial purposes, in part or in whole, is not permitted unless authorised by AUDI AG. AUDI AG does not guarantee or accept any liability with respect to the correctness of information in this document. Copyright by AUDI AG.

♦ Press tool - VW 409-

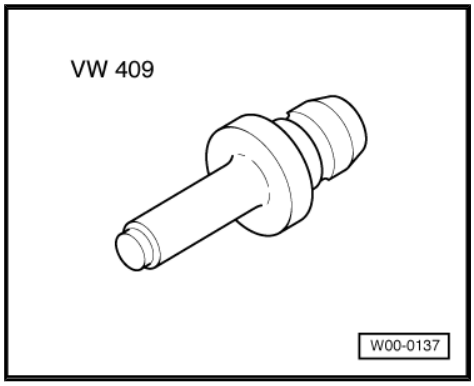

Procedure

– Remove centre differential housing ⇒ page 115 .

– Remove circlip -A- for rear splined shaft and circlip -B- for ball bearing.

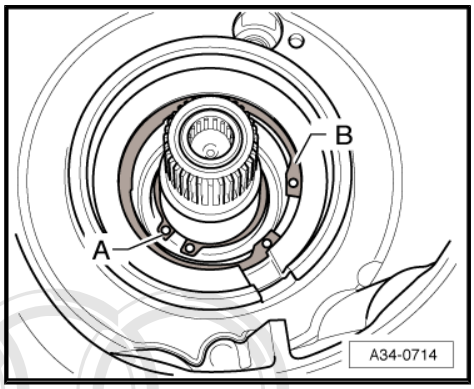

– Press rear splined shaft out of centre differential housing using press tool - VW 409- .

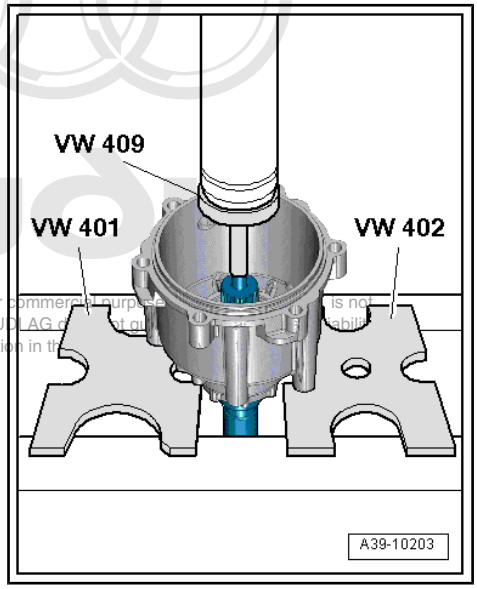

Protected by copyright. Copying for private or commercial purposes, in part or in whole, is not permitted unless authorised by AUDI AG. AUDI AG does not give any guarantee or assumes any liability with respect to the correctness of information in this document.

– Pry out oil seal.

Note

To prevent damage to the housing, place something underneath (e.g. metal bar -A-) .

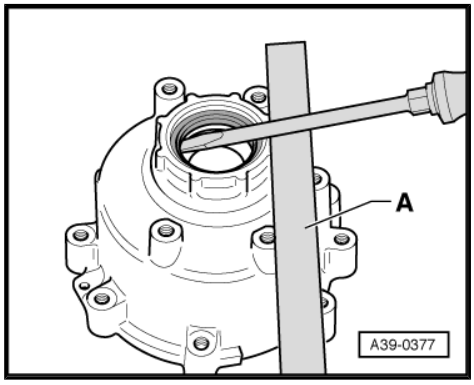

– Press out ball bearing for rear splined shaft.

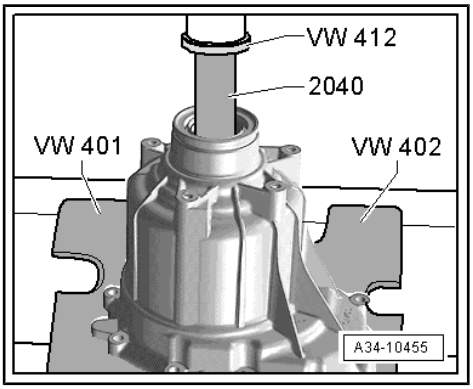

– Press in ball bearing for rear splined shaft.

• Collar of tube - VW 415 A- -arrow- faces press tool - VW 412- .

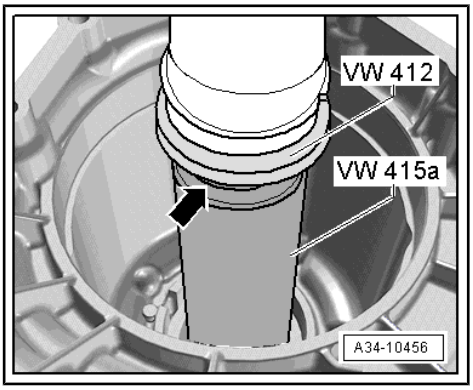

Protected by copyright. Copying for private or commercial purposes, in part or in whole, is not permitted unless authorised by AUDI AG. AUDI AG does not guarantee or accept any liability with respect to the correctness of information in this document. Copyright by AUDI AG.

– Fit circlip -B- for ball bearing.

Note

Item -A- can be disregarded.

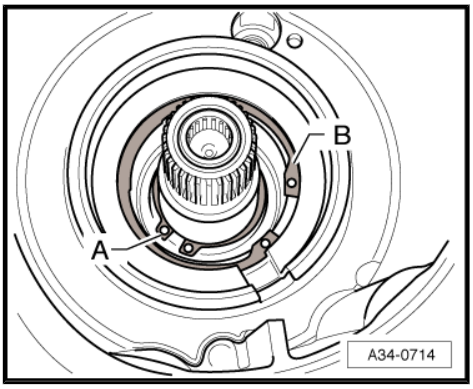

– Press rear splined shaft into centre differential housing using press tool - VW 412- .

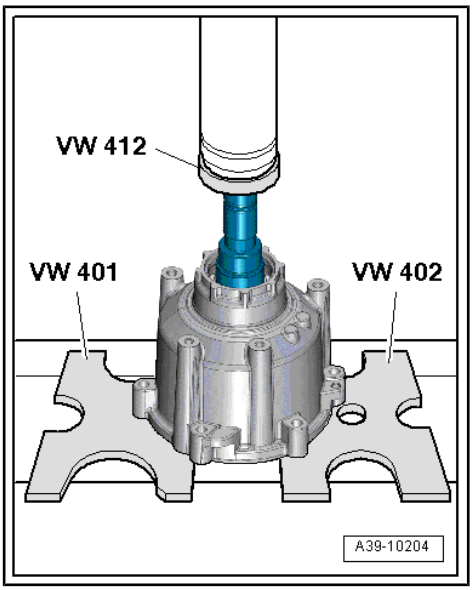

– Fit circlip -arrow- into groove on rear splined shaft.
– Install centre differential housing ⇒ page 115 .
– Install oil seal for rear splined shaft ⇒ page 117 .
– Fill up gear oil in transfer box ⇒ page 101

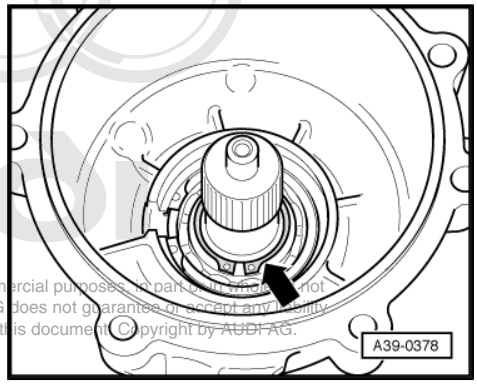

Protected by copyright. Copying for private or commercial purposes, in part or in whole, is not permitted unless authorised by AUDI AG. AUDI AG does not guarantee or accept any liability with respect to the correctness of information in this document. Copyright by AUDI AG.

5.5 Renewing ball bearing for centre differential

Special tools and workshop equipment required

- Thrust plate - VW 401-
- Thrust plate - VW 402-
- Press tool - VW 412-
- Press tool - VW 432-
- Assembly tool - 3350-
- Splitter 22 … 115 mm, Kukko 17/2

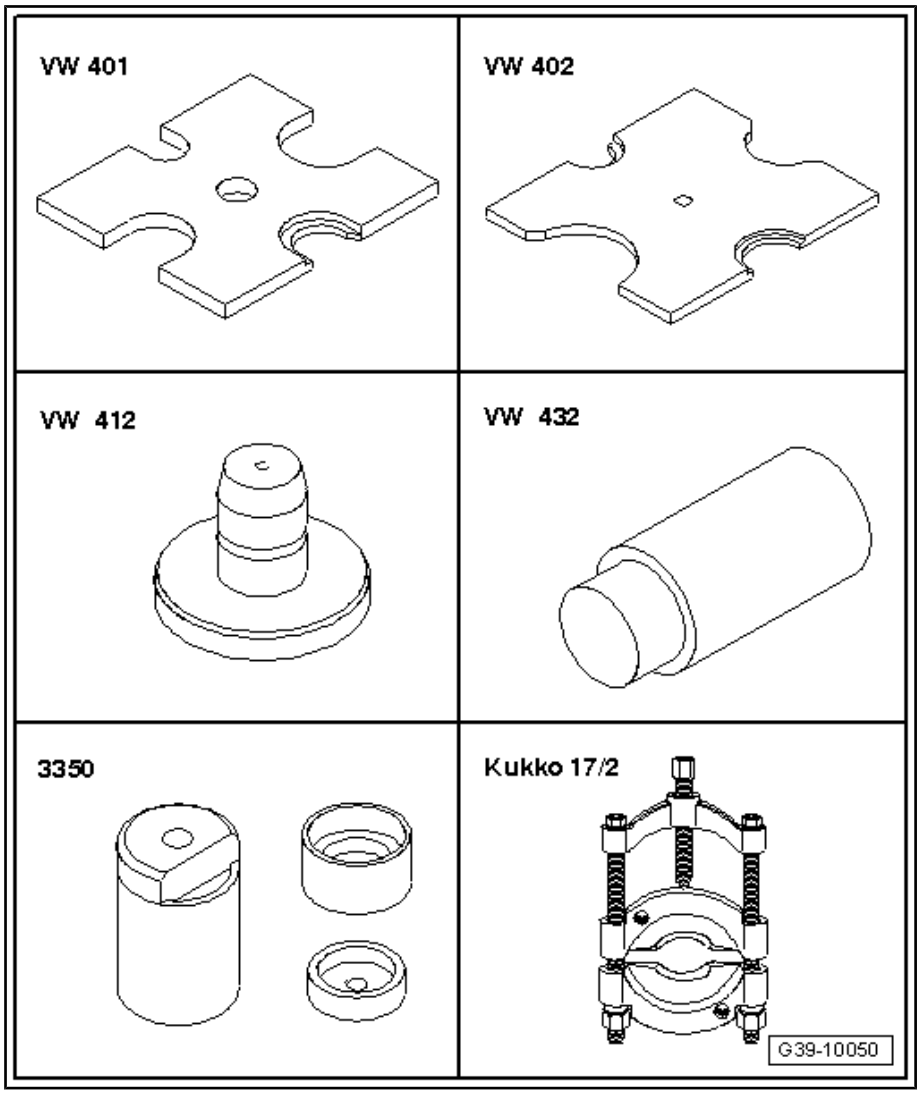

Procedure

– Remove centre differential housing ⇒ page 115 .

– Pull centre differential -1- off output shaft towards the rear.

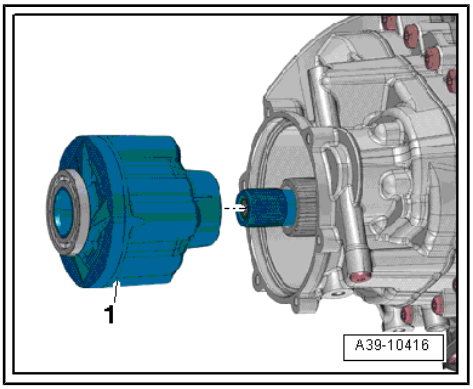

– Press ball bearing off centre differential.

A - Splitter 22 ... 115 mm - Kukko 17/2-

•

The collar of press tool - VW 432- points towards ball bearing.

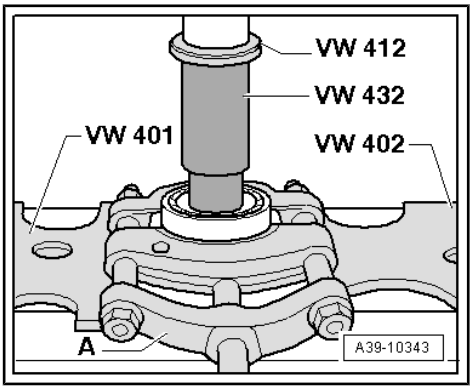

– Press ball bearing onto centre differential.

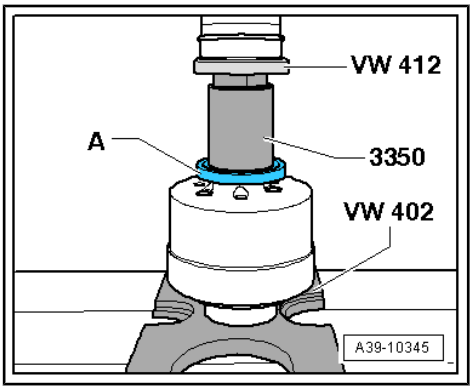

Protected by copyright. Copying for private or commercial purposes, in part or in whole, is not permitted unless authorised by AUDI AG. AUDI AG does not guarantee or accept any liability with respect to the correctness of information in this document. Copyright by AUDI AG.

6 Gearbox control system

⇒ “6.1 Overview of fitting locations - gearbox control system”, page 124

6.1 Overview of fitting locations - gearbox control system

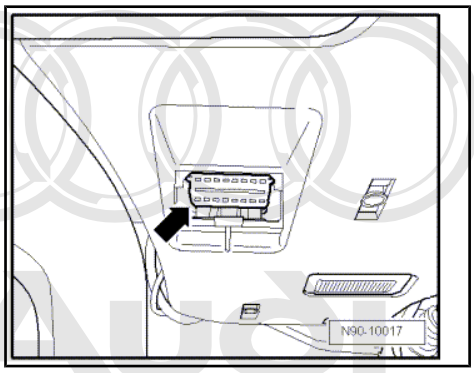

Diagnostic connection

- Fitting location: The diagnostic connection for the vehicle diagnostic tester is located in the driver's footwell.

Mechatronic unit, automatic gearbox control unit - J217- , senders and pressure regulating valves - part 1

Protected by copyright. Copying for private or commercial purposes, in part or in whole, is not permitted unless authorised by AUDI AG. AUDI AG does not guarantee or assume any liability with respect to the correctness of information in this document.

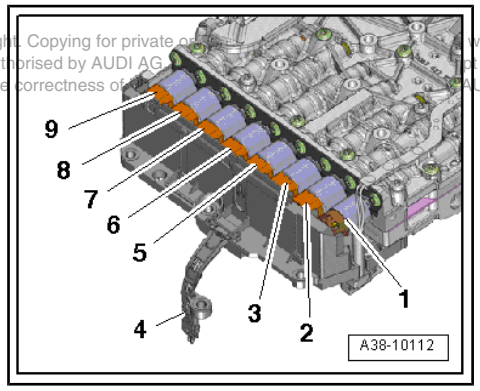

- Fitting location: the mechatronic unit is bolted to the underside of the gearbox housing and covered by the ATF oil pan.

The mechatronic unit incorporates the hydraulic control system, the electronic control unit and the sensors and actuators as a complete synchronised unit. This includes:

1 - Automatic gearbox pressure regulating valve 8 - N510- , on some versions also designated solenoid valve 1 - N88-

2 - Automatic gearbox pressure regulating valve 7 - N443-

3 - Automatic gearbox pressure regulating valve 6 - N371-

4 - Gearbox output speed sender - G195-

5 - Automatic gearbox pressure regulating valve 3 - N217-

6 - Automatic gearbox pressure regulating valve 5 - N233-

7 - Automatic gearbox pressure regulating valve 2 - N216-

8 - Automatic gearbox pressure regulating valve 4 - N218-

9 - Automatic gearbox pressure regulating valve 1 - N215-

Mechatronic unit, automatic gearbox control unit - J217- , senders and pressure regulating valves - part 2

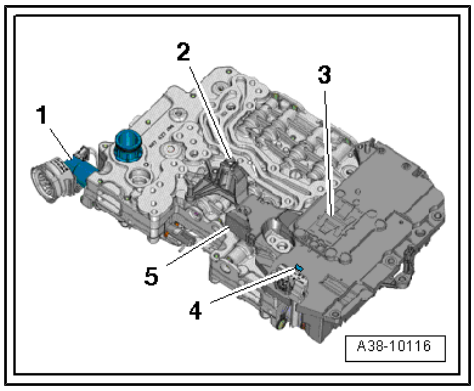

1 - Parking lock solenoid - N486-

2 - Gearbox input speed sender - G182-

3 - Automatic gearbox control unit - J217-

4 - Gearbox oil temperature sender - G93-

5 - Parking lock sender - G747-

Note

- *All components mentioned are tested via self-diagnosis.*
- *Not illustrated: accumulator solenoid - N485- for vehicles with start/stop system*
- *The mechatronic unit can only be replaced as a complete unit.*

Removing and installing ⇒ page 89 .

Hydraulic pulse accumulator -A- with accumulator solenoid - N485- (not fitted on all versions)

Removing and installing ⇒ page 84 .

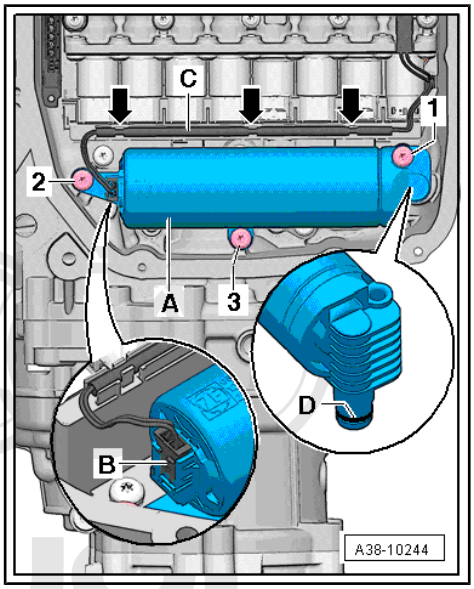

Gearbox oil cooling valve - N509-

The gearbox oil cooling valve - N509- can be fitted in different locations -1-, depending on version. In this case it is located at the front left next to the continued coolant circulation pump - V51- -2-.

Removing and installing ⇒ Rep. gr. 19 ; Coolant pump/thermostat assembly; Removing and installing coolant valves

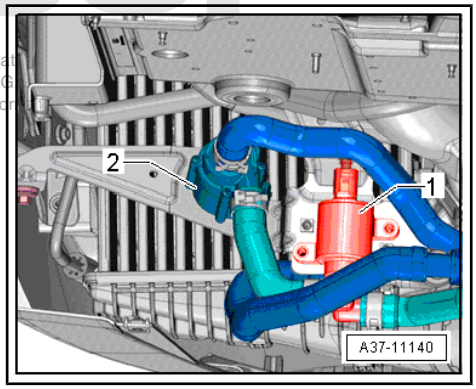

Shift unit with selector lever - E313- .

1 - Shift unit with selector lever - E313- , solenoid 1 for selector lever lock - N496- , solenoid 2 for selector lever lock - N497- , solenoid 3 for selector lever lock - N498- , solenoid 4 for selector lever lock - N499- , solenoid 5 for selector lever lock - N500-

2 - Button for selector lever release - E681- with selector lever position display - Y26-

3 - Selector lever sensors control unit - J587- with selector lever position sender - G727-

Removing and installing ⇒ page 19 .

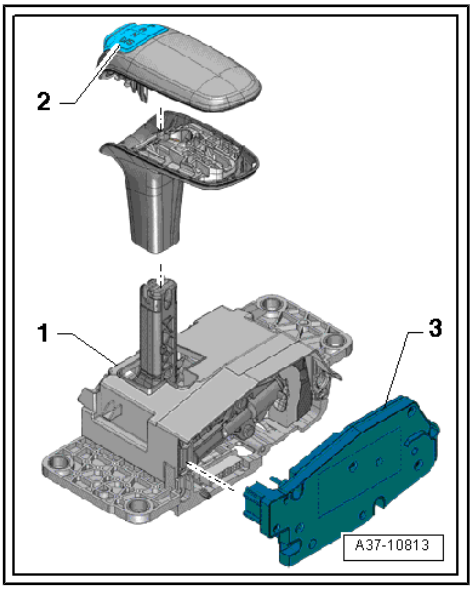

Reproduction prohibited. Copying for private or commercial purposes, in part or in whole, is not permitted unless authorized by AUDI AG. AUDI AG does not guarantee or assume any liability with respect to the correctness of information in this document.

Kickdown switch

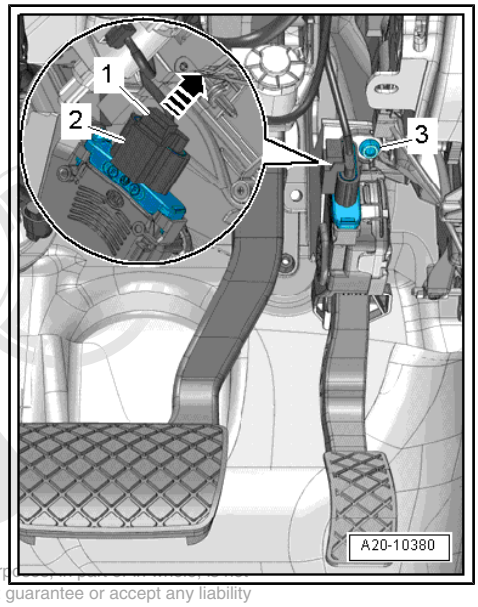

Note

A specific value for the accelerator position sender - G79- and accelerator position sender 2 - G185- is stored in the engine control unit.

- Fitting location: accelerator position sender - G79- and accelerator position sender 2 - G185- are integrated in the accelerator pedal module and cannot be renewed separately.

Note

The accelerator pedal module must be renewed if one of the accelerator position senders is defective ⇒ Fuel supply system, diesel engines; Rep. gr. 20 ; Accelerator mechanism; Removing and installing accelerator pedal module with accelerator position sender -G79- / -G185- .

Protected by copyright. Copying for private or commercial purposes, in part or entirely, is not permitted unless authorised by AUDI AG. AUDI AG does not guarantee or accept any liability with respect to the correctness of information in this document. Copyright by AUDI AG.