Workshop Manual

Audi A8 1994 ➤

12-cylinder engine, mechanics									
Engine ID	AZC								

Edition 12.2004

Protected by copyright. Copying for private or commercial purposes, in part or in whole, is not permitted unless authorised by AUDI AG. AUDI AG does not guarantee or accept any liability with respect to the correctness of information in this document. Copyright by AUDI AG.

List of Workshop Manual Repair GroupsList of Workshop Manual Repair GroupsList of Workshop Manual Repair Groups

Repair Group

00 - Technical data
10 - Removing and installing engine
13 - Crankshaft group
15 - Cylinder head, valve gear
17 - Lubrication
19 - Cooling
26 - Exhaust system

Protected by copyright. Copying for private or commercial purposes, in part or in whole, is not permitted unless authorised by AUDI AG. AUDI AG does not guarantee or accept any liability with respect to the correctness of information in this document. Copyright by AUDI AG.

Technical information should always be available to the foremen and mechanics, because their careful and constant adherence to the instructions is essential to ensure vehicle road-worthiness and safety. In addition, the normal basic safety precautions for working on motor vehicles must, as a matter of course, be observed.

All rights reserved.
No reproduction without prior agreement from publisher.

Copyright © 2010 Audi AG, Ingolstadt

A0050972920

Contents

00 - Technical data 1
1 Technical data 1
1.1 Engine number 1
1.2 Engine data 1

10 - Removing and installing engine 3
1 Contact corrosion! 3
2 Removing and installing engine 4
2.1 Removing and installing engine 4
2.2 Removing 5
2.3 Separating engine and gearbox 24
2.4 Securing engine to engine stand 31
2.5 Installing 32
2.6 Tightening torques 39
2.7 Wire routing on engine 40

13 - Crankshaft group 42
1 Lock carrier 42
1.1 Pulling lock carrier forwards 42
2 Servicing work on pulley end 48
2.1 Poly V-belt drive for power steering pump, alternator and air conditioner - exploded view of components 48
2.2 Removing and installing poly V-belt 50
2.3 Checking alignment of pulleys for power steering pump and air conditioner compressor 50
2.4 Removing and installing vibration damper 52
2.5 Renewing crankshaft oil seal (pulley end) 54
3 Servicing work on timing chain end 56
3.1 Removing and installing drive plate 56
3.2 Renewing crankshaft oil seal (on timing chain end) 57
3.3 Timing chain covers - exploded view of components 59
3.4 Renewing seals for studs 60
3.5 Removing and installing timing chain covers 61
3.6 Removing and installing timing chains for camshaft drive 68
3.7 Timing chains for camshaft drive - exploded view of components 69
3.8 Removing and installing camshaft timing chains 71
3.9 Drive chain - exploded view of components 80
3.10 Removing and installing drive chain 80

15 - Cylinder head, valve gear 84
1 Removing and installing cylinder head 84
1.1 Cylinder head - exploded view of components 84
1.2 Removing and installing cylinder head cover 85
1.3 Removing cylinder head 89
1.4 Installing cylinder head 89
2 Removing and installing intake manifold 92
2.1 Intake manifold - exploded view of components 92
2.2 Removing and installing left section of intake manifold 93
2.3 Removing and installing right section of intake manifold 95
2.4 Removing and installing top section of intake manifold 96
2.5 Removing and installing bottom section of intake manifold 99
2.6 Checking compression 101
3 Servicing valve gear 104

Protected by copyright. Copying for private or commercial purposes, in part or in whole, is not permitted unless authorised by AUDI AG. AUDI AG does not guarantee or accept any liability with respect to the correctness of information in this document. Copyright by AUDI AG.

3.1 Camshafts - exploded view of components . . . 105
3.2 Removing and installing camshaft adjuster . . . 108
3.3 Removing and installing housing for variable valve timing . . . 110
3.4 Removing and installing camshafts . . . 111
3.5 Checking axial clearance of camshafts . . . 117
3.6 Renewing valve stem oil seals . . . 118
3.7 Checking valve guides . . . 122
3.8 Machining valve seats . . . 122
3.9 Checking valves . . . 124

17 - Lubrication . . . 125

1 Removing and installing parts of the lubrication system . . . 125
1.1 Sump (bottom section) - exploded view of components . . . 125
1.2 Removing and installing oil cooler . . . 127
1.3 Removing and installing oil filter bracket . . . 129
1.4 Removing and installing sump (bottom section) . . . 130
1.5 Oil pump - exploded view of components . . . 135
1.6 Removing and installing oil pump . . . 136
1.7 Removing and installing sump (top section) . . . 137
1.8 Renewing oil retention valves . . . 140
1.9 Checking oil level . . . 140
1.10 Filling up engine oil after repairs . . . 143
1.11 Checking oil pressure and oil pressure switch . . . 144

19 - Cooling . . . 147

1 Removing and installing parts of the cooling system . . . 147
1.1 Parts of cooling system . . . 148
1.2 Draining and filling cooling system . . . 150
1.3 Removing and installing coolant pump . . . 156
1.4 Checking thermostat . . . 158
1.5 Removing and installing thermostat . . . 159
1.6 Removing and installing top coolant pipe (small) . . . 160
1.7 Removing and installing top coolant pipe (large) . . . 161
1.8 Removing and installing coolant pipe (left-side) . . . 164
1.9 Removing and installing coolant pipe (top right) . . . 167
1.10 Removing and installing coolant pipe (bottom right) . . . 172
1.11 Removing and installing radiator . . . 174
1.12 Checking cooling system for leaks . . . 179
1.13 Hydraulic fan - exploded view of components . . . 181
1.14 Removing and installing hydraulic fan . . . 182
1.15 Checking radiator fan valve N313 . . . 184
1.16 Removing and installing pump for power steering and hydraulic fan . . . 186
1.17 Checking electrical radiator fan V7 and activation . . . 189
1.18 Removing and installing electrical radiator fan V7 . . . 191

26 - Exhaust system . . . 193

Protected by copyright. Copying for private or commercial purposes, in part or in whole, is not permitted unless authorised by AUDI AG. AUDI AG does not guarantee or accept any liability with respect to the correctness of information in this document. Copyright by AUDI AG.

1 Removing and installing parts of exhaust system . . . 193
2 Removing and installing starter catalytic converters, intermediate pipes and main catalytic converters . . . 194
2.1 Removing and installing starter catalytic converters, intermediate pipes and main catalytic converters . . . 196
2.2 Removing and installing exhaust manifold . . . 201
3 Removing and installing centre silencer and rear silencer . . . 203
3.1 Stress-free alignment of exhaust system . . . 205
4 Servicing exhaust flap . . . 207
4.1 Checking exhaust flap . . . 207

4.2 Checking vacuum unit for exhaust flap 208
4.3 Checking exhaust flap valve N321 209
5 Servicing secondary air system 212
5.1 Secondary air system 212
5.2 Exploded view of components 213
5.3 Checking secondary air system for leaks 215
5.4 Checking combination valves for secondary air for correct operation and leakage 215
5.5 Checking secondary air inlet valve N112 and secondary air inlet valve 2 N320 217
5.6 Checking secondary air pump relay J299 , secondary air pump relay 2 J545 and activation 221
5.7 Secondary air pump - exploded view of components 229
5.8 Cleaning air filter element for secondary air pump 229
5.9 Removing and installing secondary air pump 230
5.10 Removing and installing combination valve for secondary air system (left-side) 232
5.11 Removing and installing combination valve for secondary air system (right-side) 233

Protected by copyright. Copying for private or commercial purposes, in part or in whole, is not permitted unless authorised by AUDI AG. AUDI AG does not guarantee or accept any liability with respect to the correctness of information in this document. Copyright by AUDI AG.

Protected by copyright. Copying for private or commercial purposes, in part or in whole, is not permitted unless authorised by AUDI AG. AUDI AG does not guarantee or accept any liability with respect to the correctness of information in this document. Copyright by AUDI AG.

00 – Technical data

1 Technical data

1.1 Engine number

The engine number (“Engine code” and “Serial number”) can be found on the front of the cylinder block beneath the left-side cylinder head.

The engine code is also included on the vehicle data sticker.

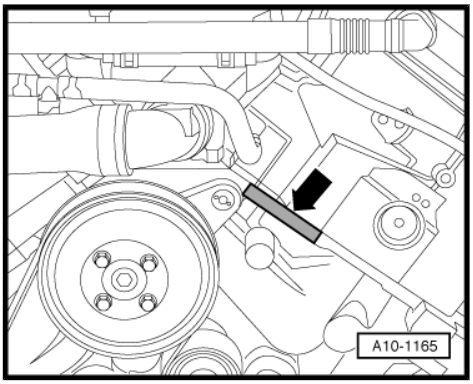

1.2 Engine data

Code letters		AZC
Capacity	ltr.	5.998
Power output	kW at rpm	309/6000
Torque	Nm at rpm	550/3500 … 4750
Bore	∅ in mm	84
Stroke	mm	86.4
Compression		10.75
RON	at least	98 [1)]
Injection/ignition system		Motronic
Firing order		1-12-5-8-3-10-6-7-2-11-4-9
Knock control		yes
Secondary air system		yes
Exhaust gas recirculation		no
Variable valve timing		yes

1) Unleaded premium RON 95 can also be used, but results in reduced power

Protected by copyright. Copying for private or commercial purposes, in part or in whole, is not permitted unless authorised by AUDI AG. AUDI AG does not guarantee or accept any liability with respect to the correctness of information in this document. Copyright by AUDI AG.

Cylinder arrangement on W12 engine

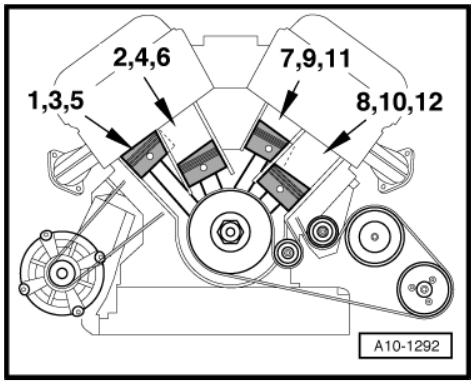

Valve timing [2] for cylinders 1, 3, 5 and 7, 9, 11	
Exhaust and inlet “advanced”	
Inlet opens before TDC	27°
Inlet closes after TDC	183°
Exhaust opens before TDC	235°
Exhaust closes before TDC	20°
Exhaust and inlet “retarded”	
Inlet opens after TDC	25°
Inlet closes after TDC	235°
Exhaust opens before TDC	213°
Exhaust closes after TDC	2°

2) At 1 mm valve lift and 0 mm valve clearance

Cylinder arrangement on W12 engine

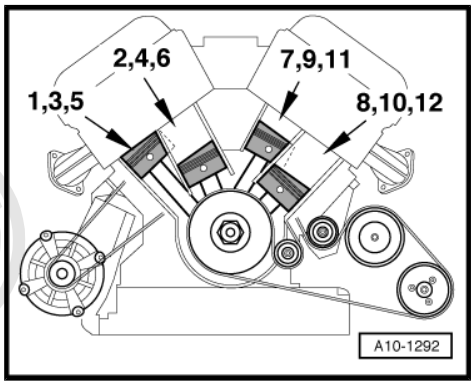

Valve timing [3] for cylinders 2, 4, 6 and 8, 10, 12	
Exhaust and inlet “advanced”	
Inlet opens before TDC	27°
Inlet closes after TDC	188°
Exhaust opens before TDC	230°
Exhaust closes before TDC	20°
Exhaust and inlet “retarded”	
Inlet opens after TDC	25°
Inlet closes after TDC	240°
Exhaust opens before TDC	208°
Exhaust closes after TDC	2°

3) At 1 mm valve lift and 0 mm valve clearance

Protected by copyright. Copying for private or commercial purposes, in part or in whole, is not permitted unless authorised by AUDI AG. AUDI AG does not guarantee or accept any liability with respect to the correctness of information in this document. Copyright by AUDI AG.

10 – Removing and installing engine

1 Contact corrosion!

Contact corrosion can occur if unsuitable fasteners are used (e.g. bolts. nuts, washers, etc.).

For this reason, only fasteners with a special surface coating are used. These elements can be recognised by their greenish colour.

Additionally, all rubber and plastic parts and all adhesives are made of non-conductive materials.

Always fit new components when in doubt about the reuseability of old components.

Caution

- *Only use genuine Audi parts.*
- *Accessories must be approved by AUDI AG.*
- *Damage caused by contact corrosion is not covered under warranty.*

Protected by copyright. Copying for private or commercial purposes, in part or in whole, is not permitted unless authorised by AUDI AG. AUDI AG does not guarantee or accept any liability with respect to the correctness of information in this document. Copyright by AUDI AG.

2 Removing and installing engine

Note

- *The engine is removed from underneath together with the gearbox (with lock carrier removed).*
- *Renew all cable ties which are opened or cut open when removing the engine. Refit in the same position when installing the engine.*
- *Collect drained coolant in a clean container for re-use or disposal.*

2.1 Removing and installing engine

Special tools and workshop equipment required

- Hose clamps for hoses up to 25 mm Ø -3094-
- Drip tray -V.A.G 1306-
- Oil extraction unit - V.A.G 1358 - or - V.A.G 1782-
- Spark plug connector pliers -V.A.G 1922-
- Scissor-type assembly platform -VAS 6131- with support set -VAS 6131/10- and -VAS 6131/11-
- Puller -T40010-
- Drip tray

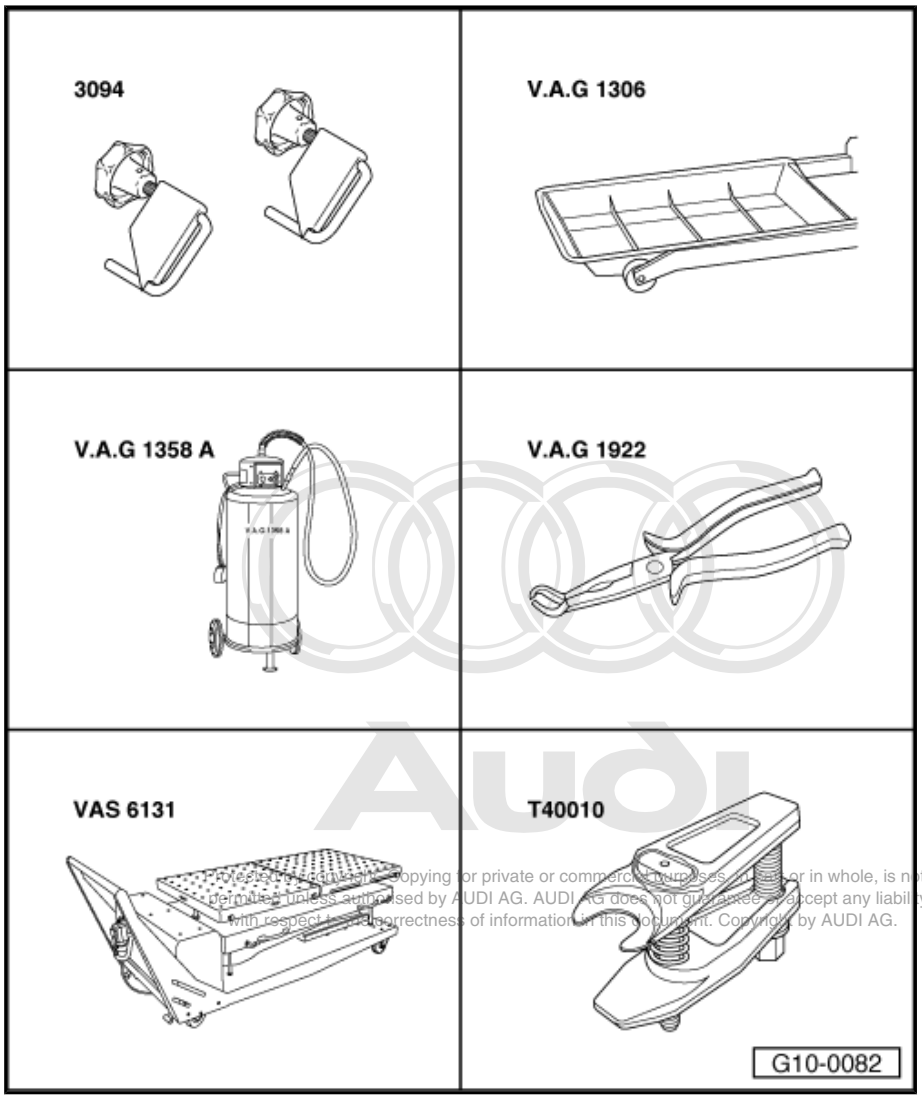

Reproduction and/or copying for private or commercial purposes, in part or in whole, is not permitted unless authorised by AUDI AG. AUDI AG does not guarantee or accept any liability with respect to the correctness of information in this document. Copyright by AUDI AG.

2.2 Removing

Caution

On vehicles with telematics, activate service mode of telematics control unit before disconnecting battery. ⇒ Radio, telephone and navigation system self-diagnosis; Rep. Gr. 01 .

– Obtain code on vehicles with coded radio / radio and navigation system (RNS).

– Remove the side cover in the luggage compartment and the floor cover (fastened with velcro).

– With the ignition switched off, detach earth cable at negative terminal -arrow- on battery in luggage compartment (right-side).

– Discharge the refrigerant system ⇒ Air conditioner system - with refrigerant R134a .

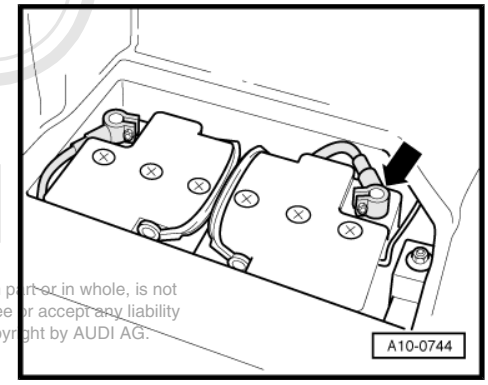

WARNING

Hot steam/hot coolant may escape when opening expansion tank; cover filler cap with cloth and open carefully.

Provided by mhh Auto. Copying for private or commercial purposes, in part or in whole, is not permitted unless authorized by AUDI AG. AUDI AG does not guarantee or accept any liability with respect to the correctness of information in this document. Copyright by AUDI AG.

– Open filler cap on coolant expansion tank.

– Remove both front wheels.

– Vehicles with auxiliary heater: remove bolts -arrows- securing exhaust pipe for auxiliary/additional heater to noise insulation.

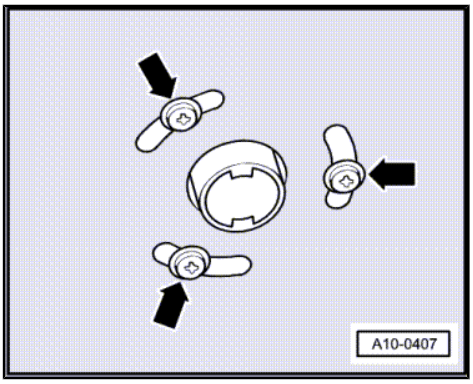

– Loosen quick release fasteners -1- and remove noise insulation.

– Loosen both front wheel housing liners at front.

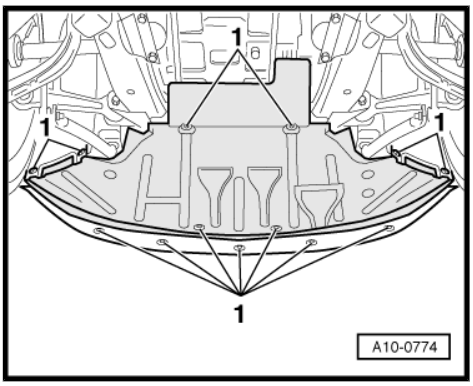

– Release retaining clips -1- and -2- and remove air intake grille (left and right).

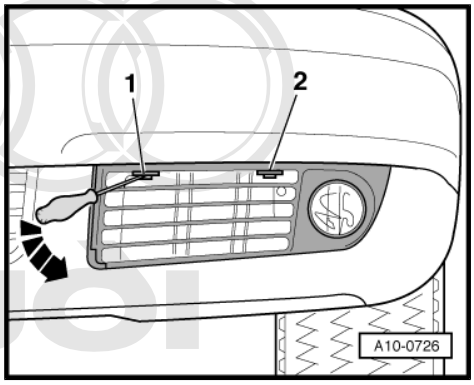

Protected by copyright. Copying for private or commercial purposes, in part or in whole, is not permitted unless authorised by AUDI AG. AUDI AG does not guarantee or accept any liability with respect to the correctness of information in this document. Copyright by AUDI AG.

– Unscrew the bolt in the opening -arrow- in the bumper (left and right).

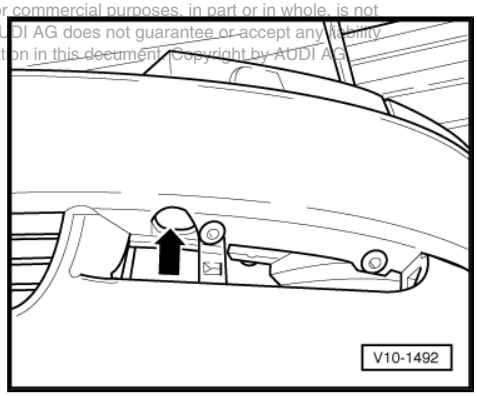

– Pull bumper forwards slightly and disconnect electrical connector -1-.
– Clamp off hose for headlight washer system before T-connection with hose clamp -3094- .
– Detach hose at T-connection.
– Remove the bumper.

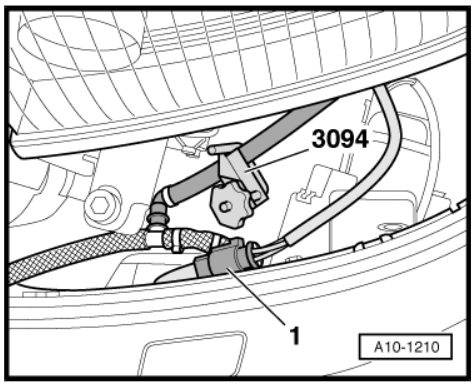

– Place drip tray -V.A.G 1306- under engine.
– Disconnect coolant hose at bottom of oil cooler -arrow- and drain off coolant.

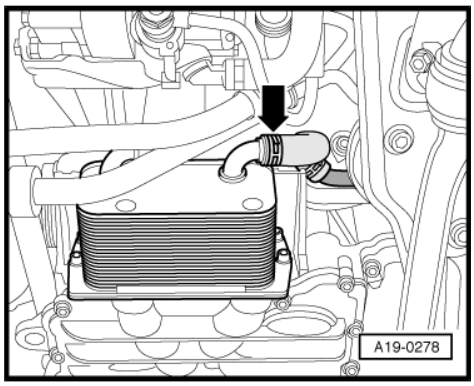

– Disconnect coolant hoses from radiator (bottom right) -arrows- and drain off coolant.

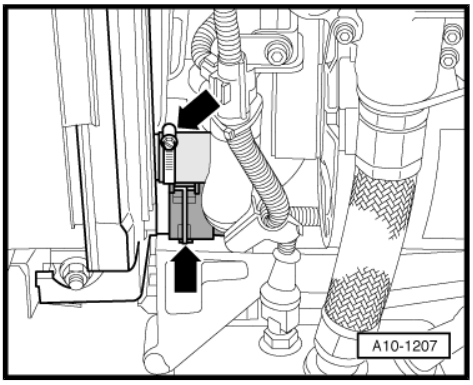

– Disconnect coolant hose (right-side) at engine -arrow- and drain off remaining coolant.

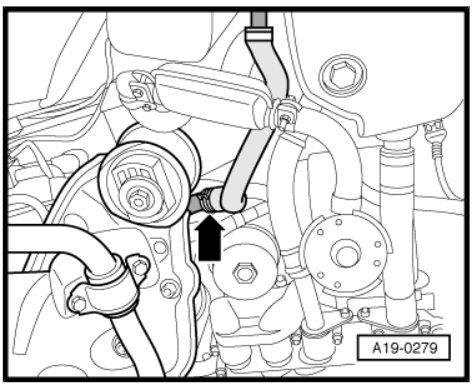

– Unscrew bolts -1- and -2- and detach refrigerant lines -3- and -4- from connection.

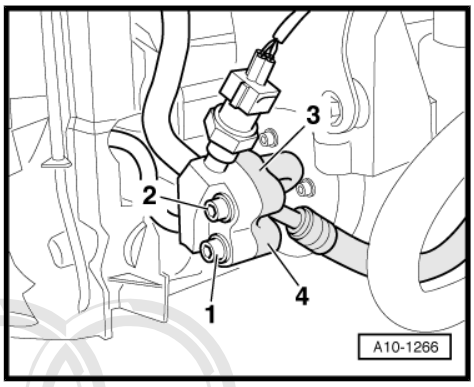

– Place drip tray underneath.
– Unbolt ATF line -arrow- from bottom of radiator.

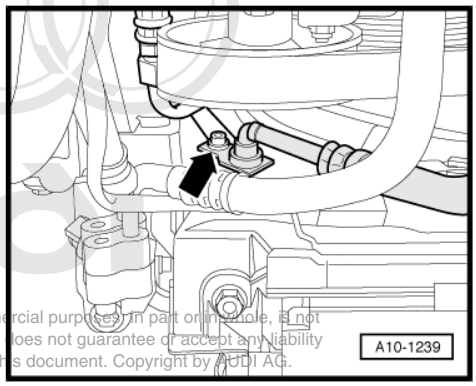

Note

Note the rules for cleanliness when working on the automatic gearbox ⇒ Automatic gearbox 01L, four-wheel drive; Rep. Gr. 37 .

Protected by copyright. Copying for private or commercial purposes, in part or in whole, is not permitted unless authorised by AUDI AG. AUDI AG does not guarantee or accept any liability with respect to the correctness of information in this document. Copyright by AUDI AG.

– Remove cover (left-side) in engine compartment -arrows-.

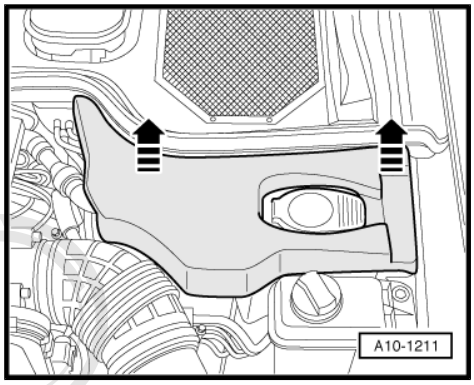

– Unclip cover -1- for air duct (left-side) on lock carrier in engine compartment.
– Remove air duct -2-.

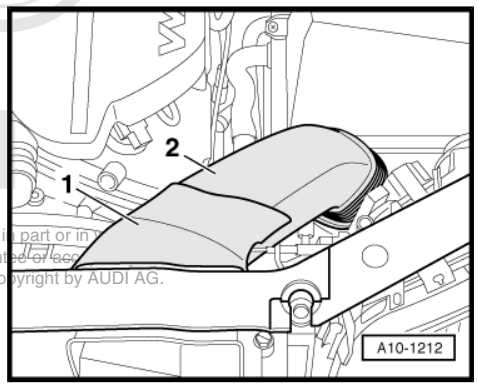

Protected by copyright. Copying for private or commercial purposes, in part or in
permitted unless authorised by AUDI AG. AUDI AG does not guarantee or ac
with respect to the correctness of information in this document. Copyright by AUDI AG.

– Remove cover -7- for dipped beam headlights from headlight housing (left-side).
– Disconnect hose -1- at combination valve for secondary air.
– Unscrew bolts -5- and detach reservoir for power steering at bracket.
– Detach electrical connector -2- for air mass meter 2 -G246- .
– Detach hose -4- from air intake hose.
– Detach air intake hose -3- from intake manifold.
– Unscrew the 2 nuts -6-.
– Raise air cleaner housing slightly and unplug electrical connector on rear of air cleaner housing.
– Move electrical wiring at air cleaner housing clear.
– Take out air cleaner housing.

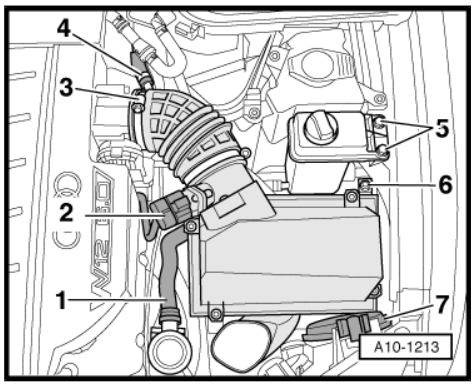

– Remove cover (right-side) in engine compartment -arrows-.

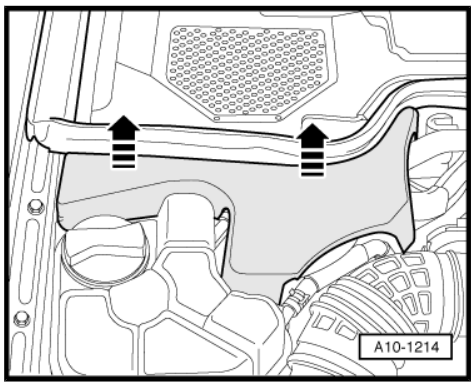

– Unclip cover -1- for air duct (right-side) on lock carrier in engine compartment.
– Remove air duct -2-.

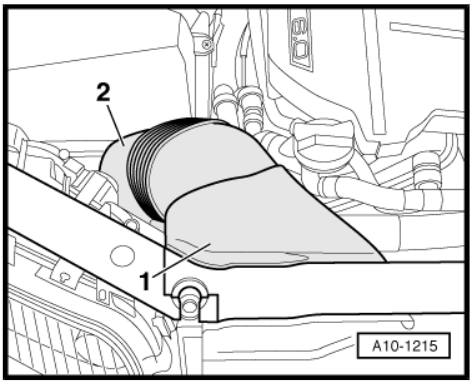

– Remove cover -1- for dipped beam headlights from headlight housing (right-side).
– Disconnect hose -6- at combination valve for secondary air.
– Unbolt coolant expansion tank -3-.
– Unplug electrical connector for coolant shortage indicator switch -F66- at expansion tank (below).
– Detach electrical connector -5- for air mass meter -G70- .
– Detach air intake hose -4- from intake manifold.
– Unscrew the 2 nuts -2-.
– Raise air cleaner housing slightly and unplug electrical connector on rear of air cleaner housing.
– Move electrical wiring at air cleaner housing clear and remove air cleaner housing.

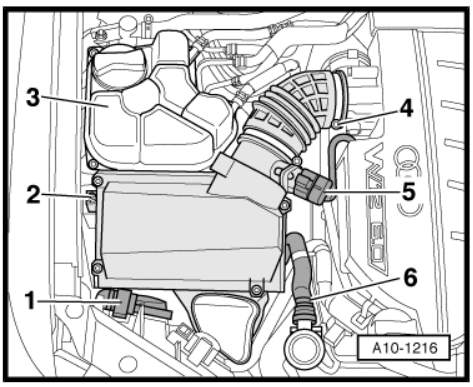

– Detach Bowden cable -1- for bonnet at lock lever (left and right) and move clear.
– Unbolt ATF line from top of radiator -arrow-.

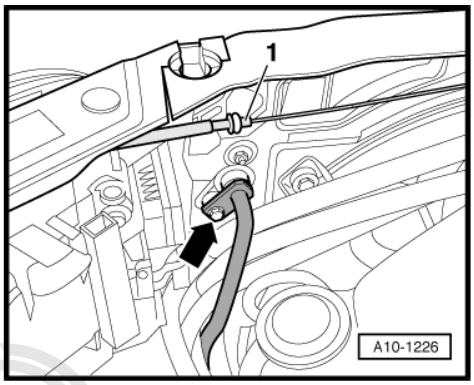

Note

♦ *Note the rules for cleanliness when working on the automatic gearbox ⇒ Automatic gearbox 01L, four-wheel drive; Rep. Gr. 37 .*

♦ *Secure the ATF lines facing upwards on the engine to prevent fluid leaking out.*

– Using oil extraction unit, draw off hydraulic fluid for the power-assisted steering from the reservoir.

Note

Lay a cloth beneath connection points to catch any leaking hydraulic fluid.

Protected by copyright. Copying for private or commercial purposes, in part or in whole, is not permitted unless authorised by AUDI AG. AUDI AG does not guarantee or accept any liability with respect to the correctness of information in this document. Copyright by AUDI AG.

– Detach the hydraulic pressure line -1-.
– Detach hydraulic hose -2- and move clear.

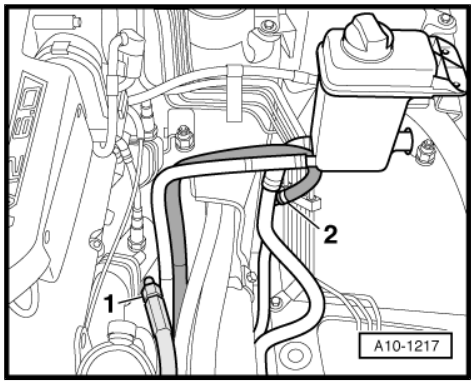

– Detach hydraulic hoses at front on lock carrier and release retaining clip -arrows-.

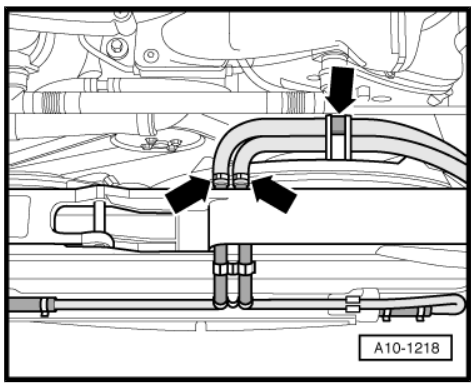

– Detach electrical connector -arrow- at radiator fan drive circuit temperature sender -G382- and move wire clear.

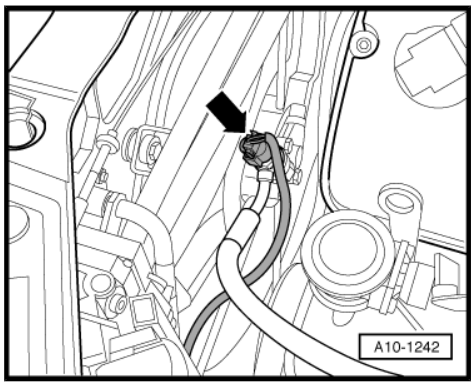

– Detach coolant hoses on right side of vehicle behind lock carrier -arrows- and remove.

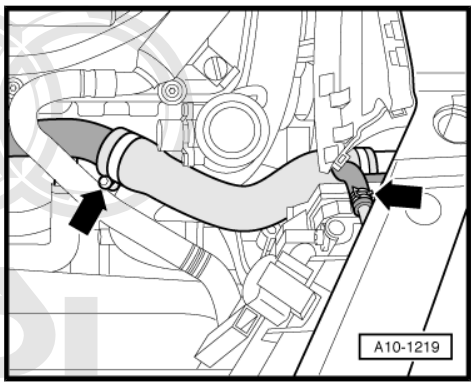

Protected by copyright. Copying for private or commercial purposes, in part or in whole, is not permitted unless authorised by AUDI AG. AUDI AG does not guarantee or accept any liability with respect to the correctness of information in this document. Copyright by AUDI AG.

– Unplug electrical connectors -arrows- for headlights and turn signals on both sides of the vehicle and move wires clear.

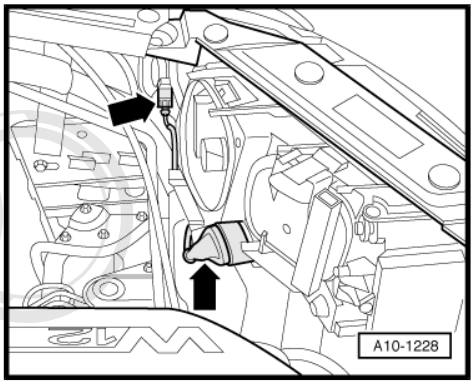

– Unscrew trim on both sides of the vehicle -arrow- and pull off forwards.

Protected by copyright. Copying for private or commercial purposes, in part or in whole, is not permitted unless authorised by AUDI AG. AUDI AG does not guarantee or accept any liability with respect to the correctness of information in this document. Copyright by AUDI AG.

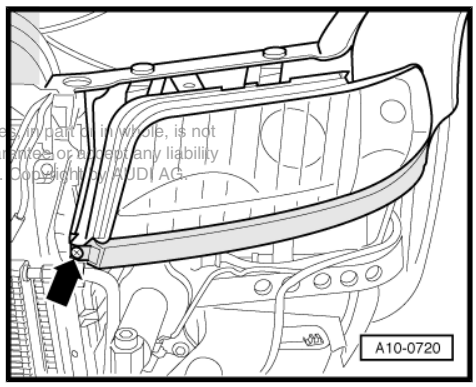

– Unplug electrical connectors -arrows- and move electrical wires clear.

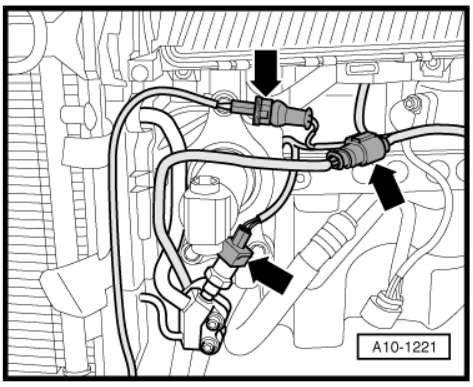

– On vehicles equipped with additional fan for warmer climates, unplug electrical connector -1- for additional fan and move wire clear -arrows-.

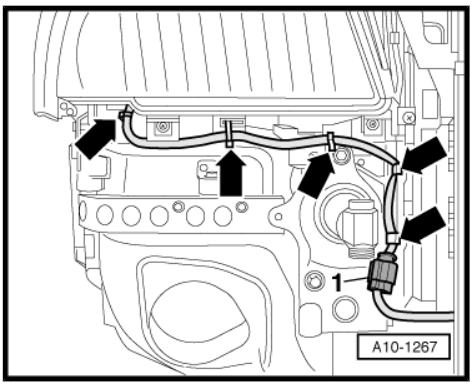

– To mark the installation position, make a coloured mark on body longitudinal members in the holes on left and right -arrow- in the lock carrier.

– Remove impact damper (left and right) by unscrewing bolts -1 ... 3-.

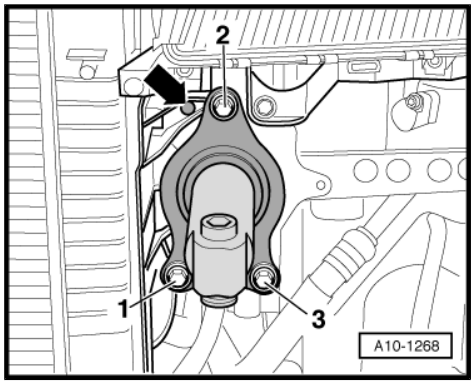

– Remove cover over bolt on both wing panels and unscrew bolt -arrow-.

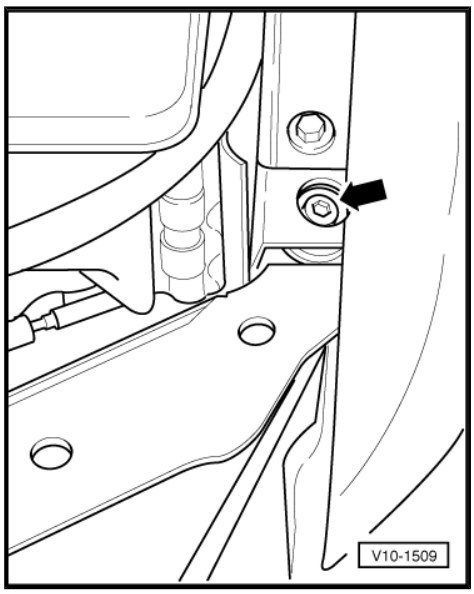

Note

Protected by copyright. Copying for private or commercial purposes, in part or in whole, is not permitted unless authorised by AUDI AG. AUDI AG does not guarantee or accept any liability with respect to the correctness of information in this document. Copyright by AUDI AG.

A second mechanic is required for removing the lock carrier.

– Remove lock carrier and place down in a secure position.

– Remove cover behind intake manifold -arrows-.

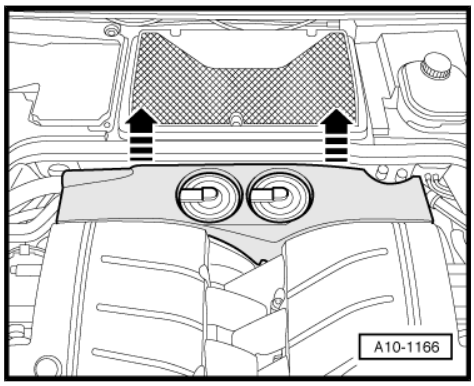

Vehicle with no auxiliary heater:

– Remove coolant hose (right-side) -1- between engine and heat exchanger.

All models:

– Detach vacuum hose -2- going to brake servo at intake manifold.

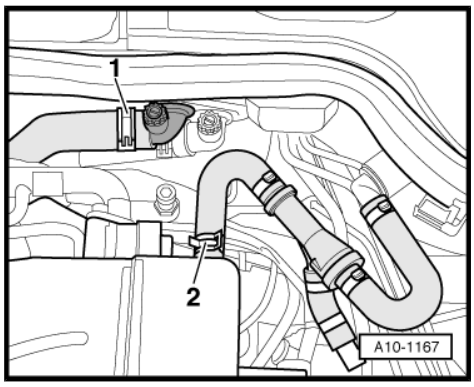

– Disconnect vacuum hose -arrow- in engine compartment (front left).

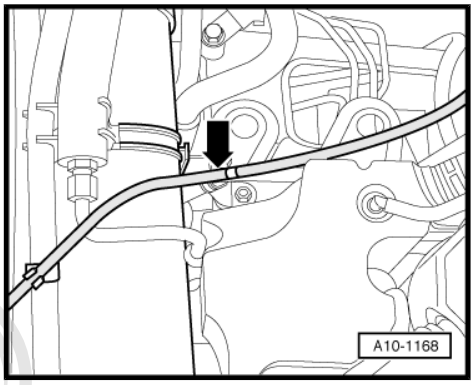

– Detach continued circulation coolant pump -V51- with bracket and hoses -arrows- and tie up to side.

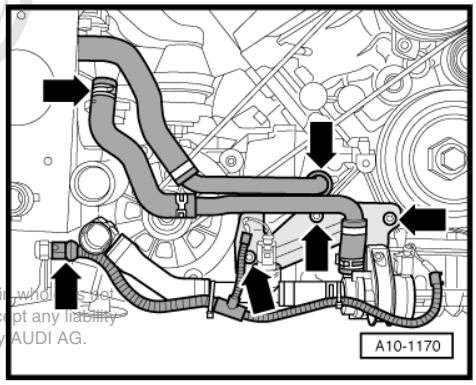

Protected by copyright. Copying for private or commercial purposes, in part or in whole, is not permitted unless authorised by AUDI AG. AUDI AG does not guarantee or accept any liability with respect to the correctness of information in this document. Copyright by AUDI AG.

– Unscrew securing bolts and nuts -arrows- for torque reaction support (front right) and remove torque reaction support.

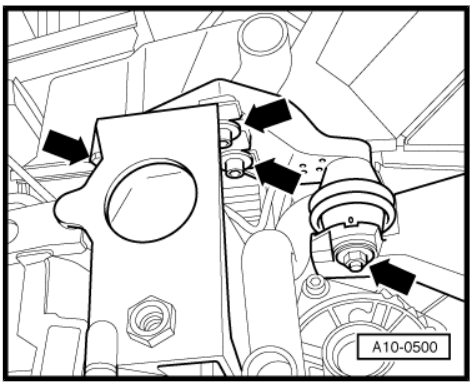

– Detach both hoses (at top) from oil reservoir -arrows-.

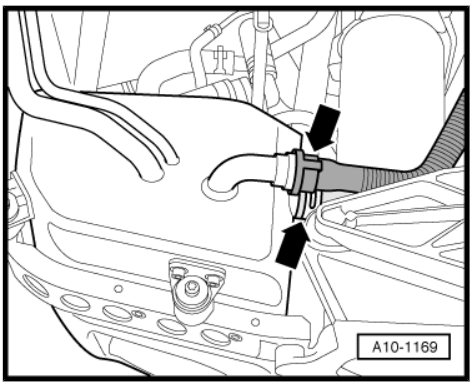

Vehicles with auxiliary heater:

– Place drip tray -V.A.G 1306- under engine.

– Detach coolant hose (right-side) at engine -arrow-.

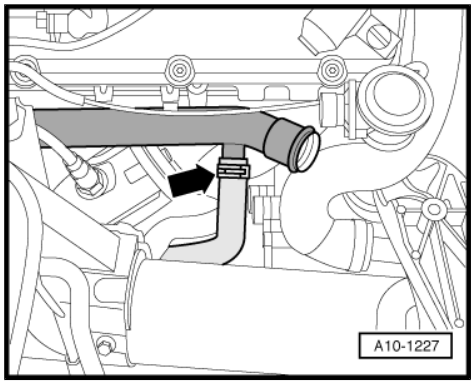

All models:

– Remove crankcase breather hose -1-.

– Disconnect coolant hoses -2 ... 4-.

– Place coolant expansion tank to side in engine compartment.

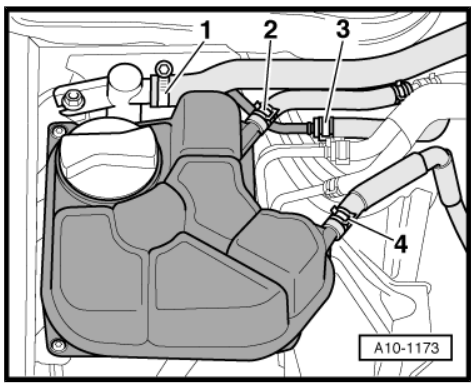

> ⚠ WARNING
>
> *The fuel system is pressurised. Before opening the system place a clean cloth around the connection. Then dissipate pressure by carefully unfastening the connection.*

– Mark fuel supply pipe -2- and fuel return pipe -3- and disconnect.

– Detach the vacuum hose -1- going to activated charcoal filter.

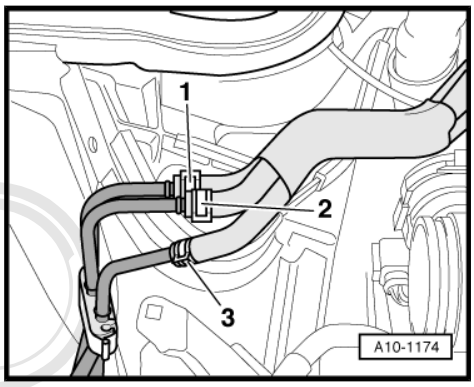

– Disconnect vacuum hose (rear right) -arrow- to exhaust flap control at intake manifold.

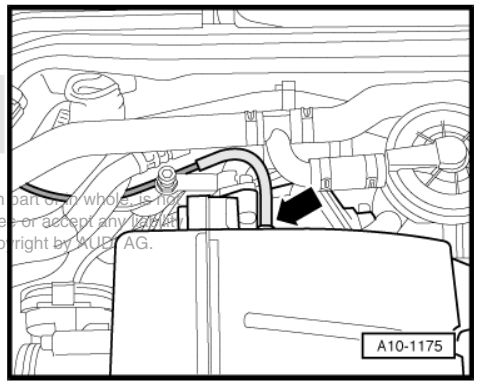

Protected by copyright. Copying for private or commercial purposes, in part or in whole, is not permitted unless authorised by AUDI AG. AUDI AG does not guarantee or accept any liability with respect to the correctness of information in this document. Copyright by AUDI AG.

– Unclip plenum chamber cover (left-side) -arrows- and remove.

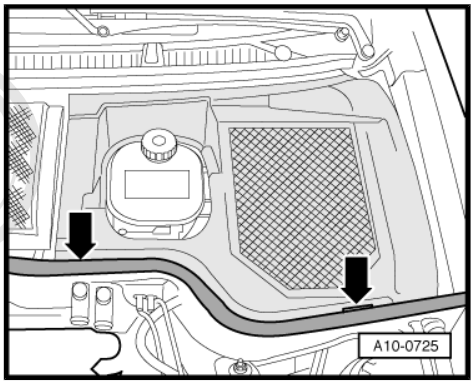

– Unscrew bolts -1- several turns.
– Unclip plenum chamber cover -2- (right-side) -arrows- and remove.

Protected by copyright. Copying for private or commercial purposes, in part or in whole, is not permitted unless authorised by AUDI AG. AUDI AG does not guarantee or accept any liability with respect to the correctness of information in this document. Copyright by AUDI AG.

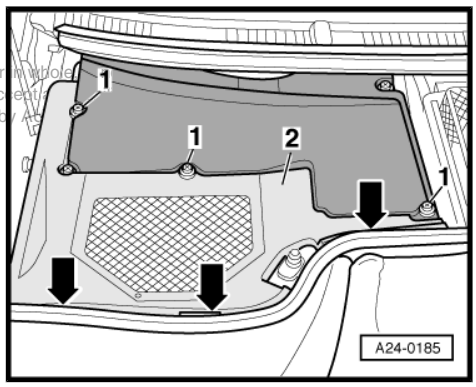

– Remove seal -1- for plenum chamber.
– Unbolt body brace -2- -arrows-.

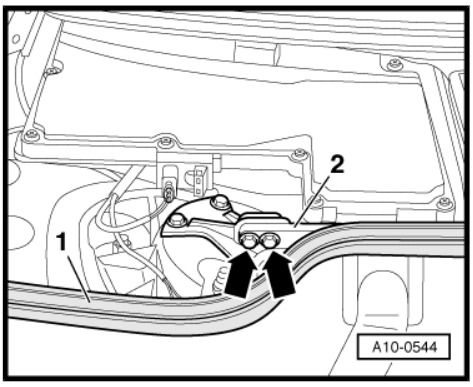

– Unscrew the cross-head screws -arrows-; for the rear left screw, pry off the cover for cowl panel trim -1-.
– Detach cover for electronics box (plenum chamber).

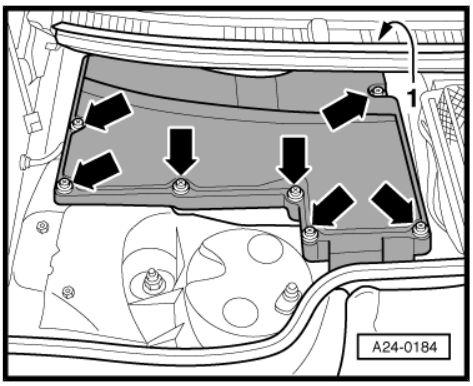

– Remove the retaining clip -arrow-.
– Detach the engine control units -1- and -2-.

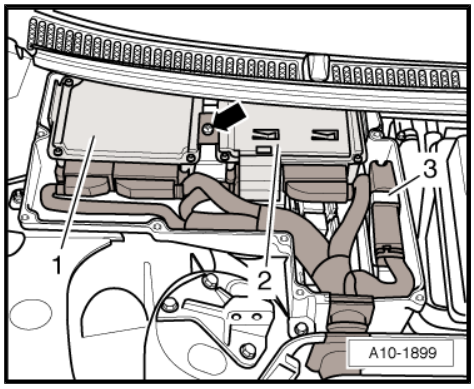

Note

The electrical connectors remain attached.

– Release and unplug connector -3- for gearbox control unit.

– Unbolt the retaining plate for the engine control units -arrows-.

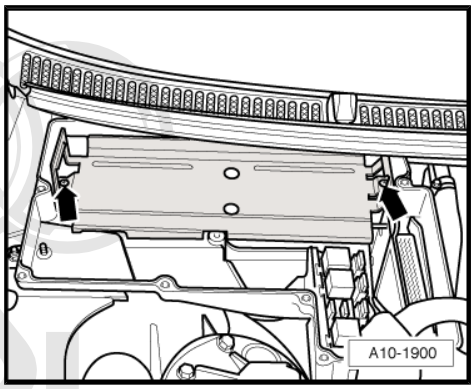

– Unscrew bolts -arrows-.
– Remove relay carrier -1- with wiring harness connected.
– Disconnect all electrical connectors from the connector point -2- using spark plug connector pliers -V.A.G 1922- .

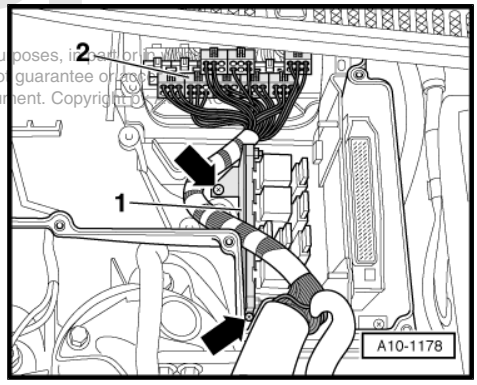

Protected by copyright. Copying for private or commercial purposes, in part or in whole, is not permitted unless authorised by AUDI AG. AUDI AG does not guarantee or accept any liability with respect to the correctness of information in this document. Copyright by AUDI AG.

– Unbolt the cable clamp -arrow- at bulkhead.
– Place engine control units with wiring harness attached on top of engine.

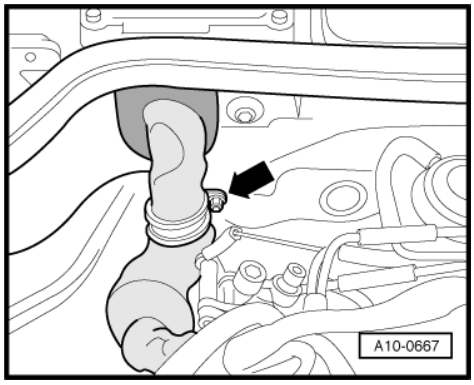

Note

Secure the engine control units using tape to prevent them falling.

– Place drip tray underneath.
– Unbolt hydraulic pressure pipes -4- and -6-.

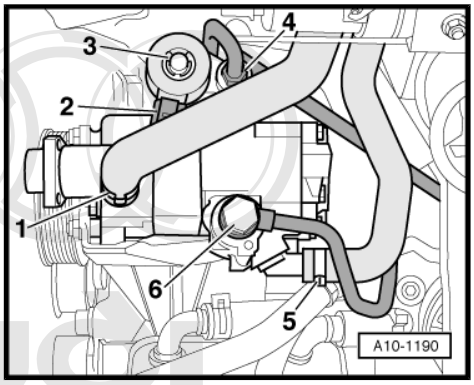

Note

Tie up rear end of hydraulic pressure pipe -Item 4- to engine lifting eye.

– Detach coolant hoses -1- and -5-.

Note

Ignore items marked -2- and -3-.

Protected by copyright. Copying for private or commercial purposes, in part or in whole, is not permitted unless authorised by AUDI AG. AUDI AG does not guarantee or accept any liability with respect to the correctness of information in this document. Copyright by AUDI AG.

– Detach refrigerant line at reservoir -arrow-.

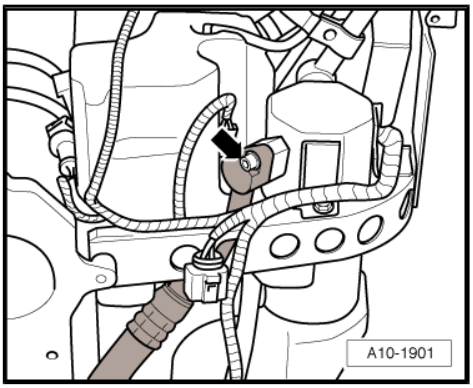

– Unplug green electrical connector -arrow- for air conditioner magnetic clutch and move wiring clear.

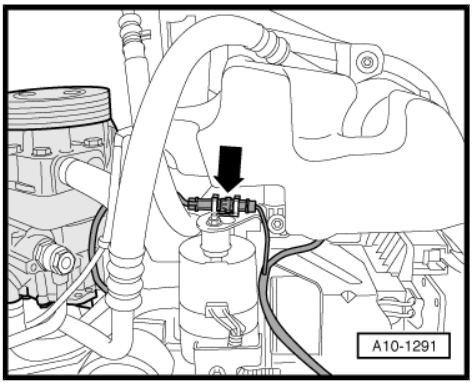

Note

Depending on the version, the connector may be positioned higher up.

– Place drip tray underneath.
– Unscrew oil drain plugs -1- and -3-.
– Detach connecting lines -2- and -4- at oil reservoir.

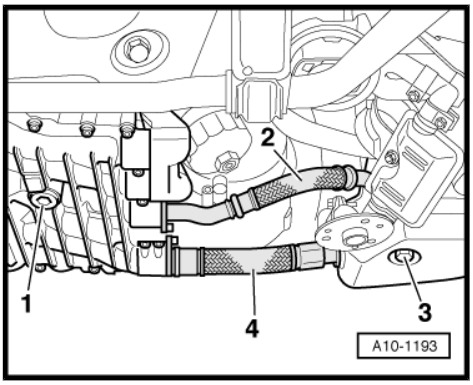

– Remove noise insulation in right wheel housing -arrow-.

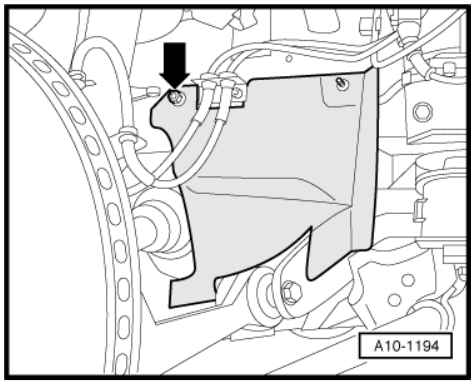

– Cut through cable tie -3- at longitudinal member (right-side).
– Unclip electrical connector -4- and unplug.
– Unclip cover of junction box.
– Unscrew electrical wiring -2- in junction box.
– Unscrew earth cable -1-.

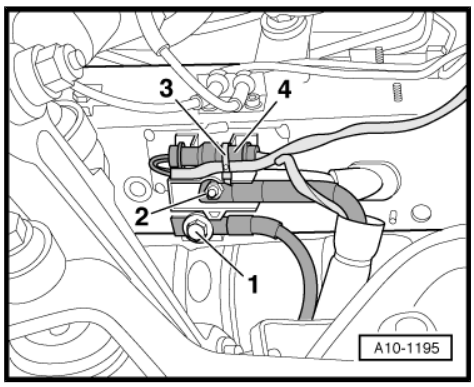

– Unscrew bolts -arrows- on left and right-side evenly and remove anti-roll bar.

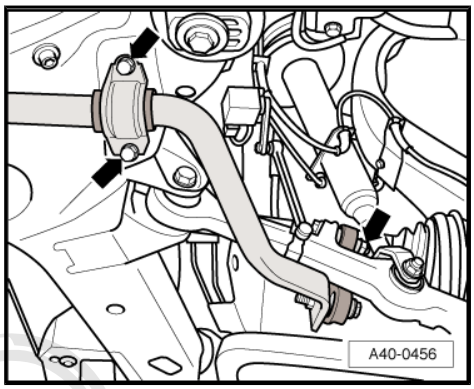

– Unscrew heat shields for drive shafts (left and right) from gearbox -arrows-.
– Unbolt drive shaft (left and right) from gearbox flange.

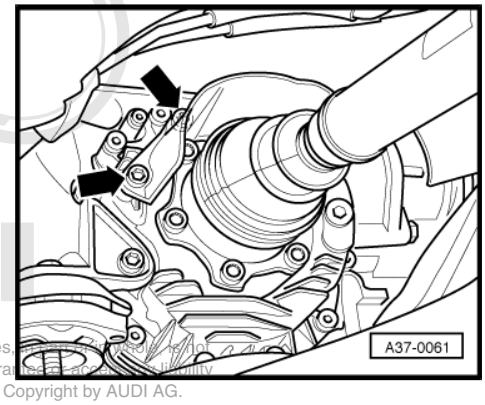

Caution

When slackening the flange bolt securing the drive shaft, the wheel bearing must not be under load (vehicle must not be standing on its wheels).

Protected by copyright. Copying for private or commercial purposes, in part or in whole, is not permitted unless authorised by AUDI AG. AUDI AG does not guarantee or accept any liability with respect to the correctness of information in this document. Copyright by AUDI AG.

– Have a 2nd mechanic press the brake pedal.
– Unscrew flange bolt -2- from drive shaft -1- (left and right).

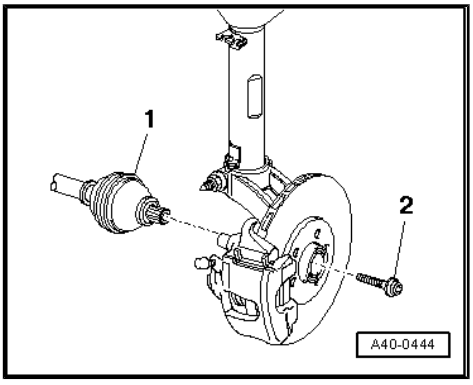

– Unclip operating rod for vehicle level sender (front left) -G78- at track control link (bottom) -arrow-.

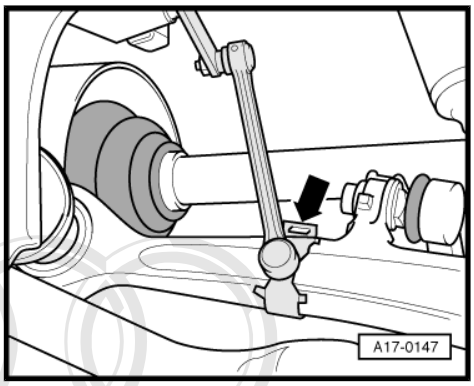

– Unbolt suspension strut from track control link -arrow-.

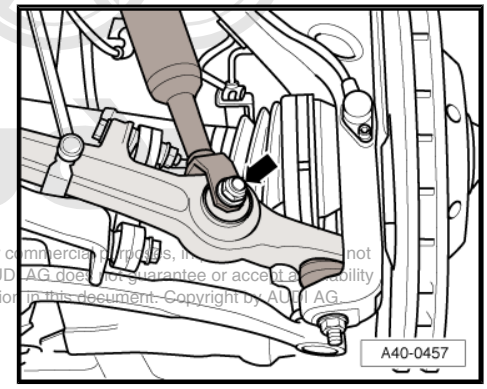

Protected by copyright. Copying for private or commercial purposes, in part or in whole, is not permitted unless authorised by AUDI AG. AUDI AG does not guarantee or accept any liability with respect to the correctness of information in this document. Copyright by AUDI AG.

– Unscrew nut for joint stud at track control link until it is flush with the end of the threads.

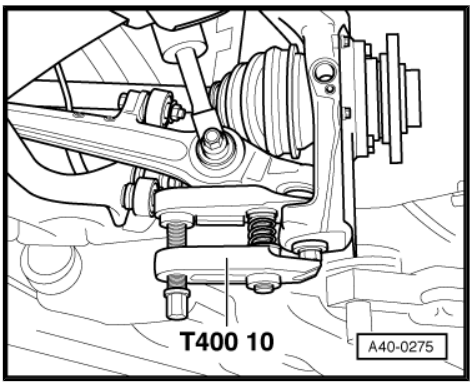

Note

- *Make sure that both lever arms of the ball joint puller are parallel to each other when exerting force.*
- *Secure the ball joint puller to prevent it falling.*

– Press the joint stud for track control link from the ball seat using ball joint puller -T40010- .
– Counterhold on joint stud using a hexagon key (4 mm).
– Unscrew nut and remove joint stud from track control link.
– Remove drive shaft and repeat the procedure for the other side of the vehicle.

– Unscrew nut for joint stud at guide link until it is flush with the end of the threads.

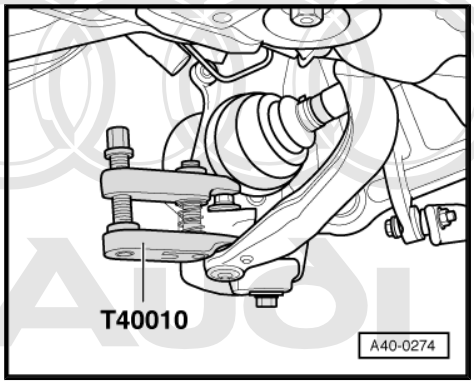

Note

- *Make sure that both lever arms of the ball joint puller are parallel to each other when exerting force.*
- *Secure the ball joint puller to prevent it falling.*

– Press the joint stud for guide link from the ball seat using ball joint puller -T40010- .

– Counterhold on joint stud using a hexagon key (4 mm).

– Unscrew nut and remove joint stud from guide link.

Protected by copyright. Copying for private or commercial purposes, in part or in whole, is not permitted unless authorised by AUDI AG. AUDI AG does not guarantee or accept any liability with respect to the correctness of information in this document. Copyright by AUDI AG.

– Unclip electrical wires -1- out of brackets at suspension strut.

– Swing the wheel bearing housing outwards in the direction of the -arrow-.

– Secure the wheel bearing housing with a suitable piece of wood -2- and repeat the procedure on the other side of the vehicle.

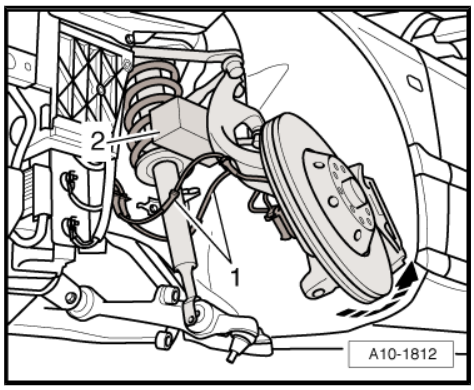

– Unscrew bolt connections -arrows- on left-side intermediate pipe / main catalytic converter.

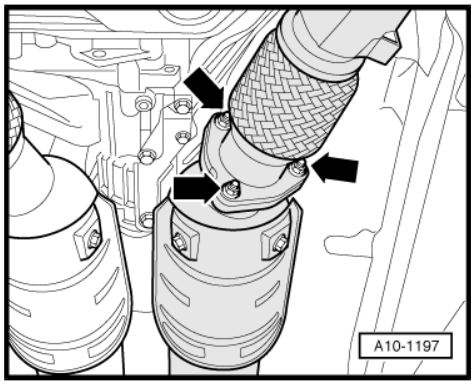

Note

The flexible joint in the intermediate pipe must not be bent more than 10° - damage can otherwise occur.

– Loosen bolt connections -2- on clamp (front left).

– Detach the main catalytic converter (left-side).

– Loosen bolt connections -1- on clamp (front right).

– Tie up main catalytic converter (right-side) to the gearbox.

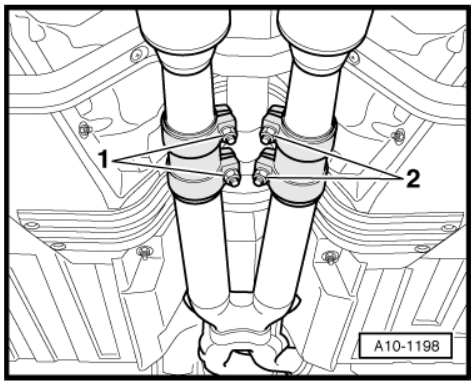

Note

The flexible joint in the intermediate pipe must not be bent more than 10° - damage can otherwise occur.

– Unscrew heat shield -A- for propshaft -arrows-.
– Unscrew bolts at gearbox/propshaft flange.
– Push propshaft back towards rear final drive. The constant velocity joints can be moved axially.
– Push the propshaft upwards and support against underbody cross member with a wooden wedge.

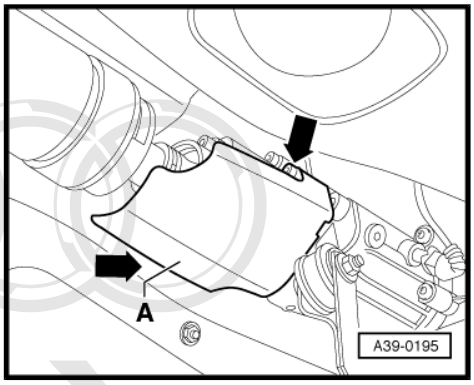

– Remove the heat shield for selector lever cable (left-side) at gearbox -arrows-.

Protected by copyright. Copying for private or commercial purposes is not permitted unless authorised by AUDI AG. AUDI AG does not guarantee or assume any liability with respect to the correctness of information in this document. Copyright by AUDI AG.

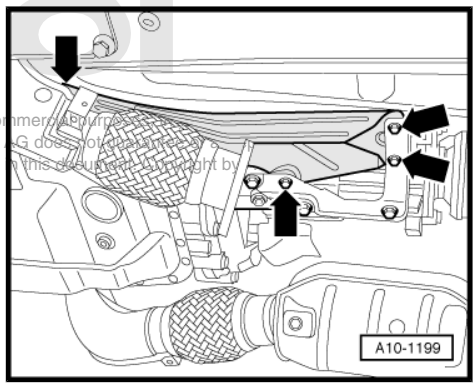

Note

- *Do not bend or kink selector lever cable.*
- *Mark the installation position of the support bracket.*

– Unbolt the support bracket -1-.
– Raise the tab -2- slightly, rotate the sleeve -3- approx. 45° and release the catch.
– Pull off sleeve -3- on selector lever cable towards rear.
– Unclip ball head -4- from ball socket.

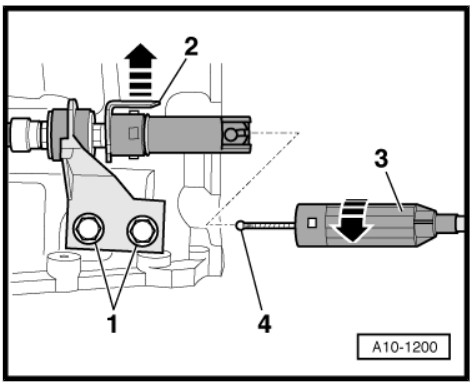

– Unscrew bracket for heat shield from gearbox -arrows-.

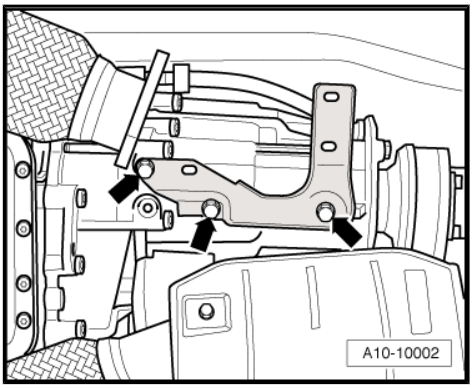

– Secure the base plate -VAS 6131/10-1- to gearbox with 2 bolts M8x30 -arrows- as shown in the illustration. To do so, insert spacers with a thickness of 7 mm at rear connection between the gearbox and base plate.

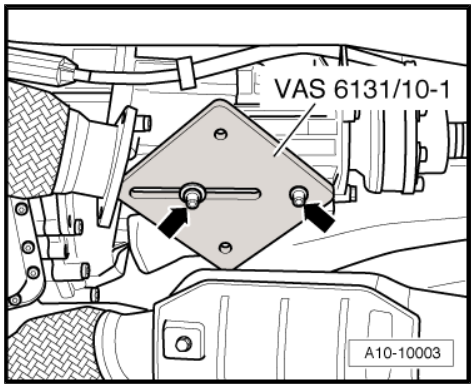

Set up the scissor-type assembly platform as follows:

– Set up the scissor-type assembly platform -VAS 6131- with support set -VAS 6131/10- and -VAS 6131/11- as follows:

Platform coordi-nates	Parts of support set -VAS 6131/10- and -VAS 6131/11-			
D2	/10-1	/10-4	/10-5	/11-1
G2	/10-1	/10-4	/10-5	/11-1
B7	/10-1	/10-3	/10-5	/10-7
G7	/10-1	/10-3	/10-5	/10-7
B11	/10-1	/10-2	/10-5	/10-8
G11	/10-1	/10-2	/10-5	/10-8
D17	/10-1	/10-4	/10-5	/11-2

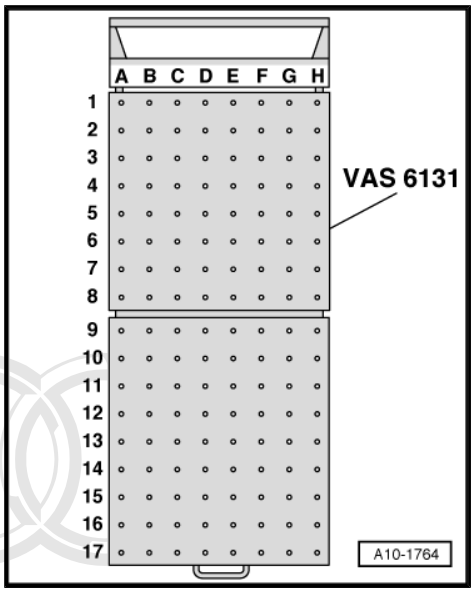

– Initially tighten the support elements to the assembly platform only hand-tight.

– Adjust the scissor-type assembly platform -VAS 6131- so that it is horizontal.

• Take note of spirit level (bubble gauge).

– Place scissor-type assembly platform -VAS 6131- under engine/gearbox assembly.

Protected by copyright. Copying for private or commercial purposes, in part or in whole, is not permitted unless authorised by AUDI AG. AUDI AG does not guarantee or accept any liability with respect to the correctness of information in this document. Copyright by AUDI AG.

– Position the support elements from support set -VAS 6131/10- and -VAS 6131/11- at front of engine, as shown in the illustration.

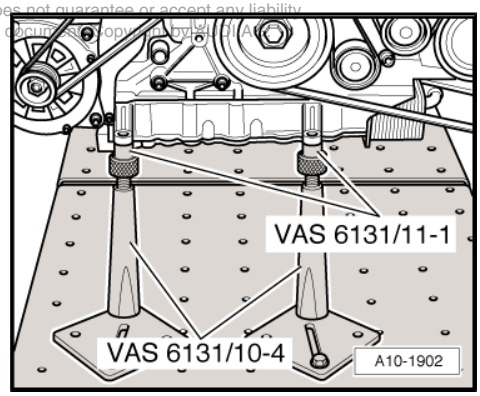

– Position the support elements from support set -VAS 6131/10- at right and left of subframe, as shown in the illustration.

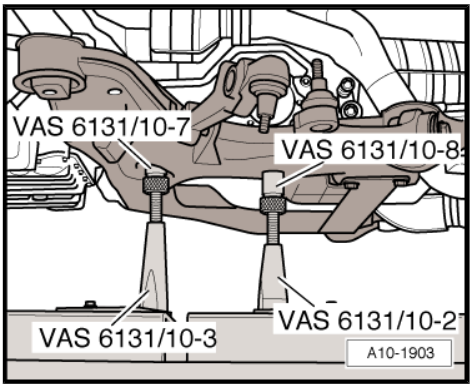

– Position the support element from support set -VAS 6131/10- and -VAS 6131/11- at rear base plate -VAS 6131/10-1- on gearbox, as shown in the illustration.
– Turn all spindles for the support elements upwards until all locating lugs make contact with the mounting points.
– Tighten base plates for support elements to scissor-type assembly platform -VAS 6131- to 20Nm.
– Raise the scissor-type assembly platform -VAS 6131- slightly to take up weight on support elements.

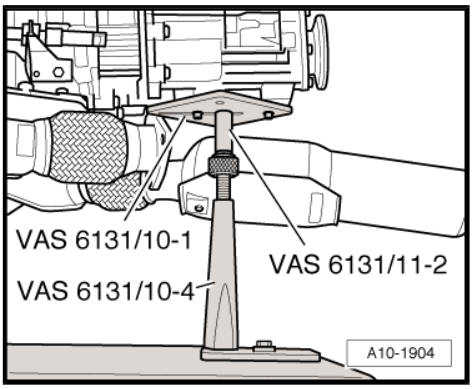

– Unbolt cross piece -1-.

Note

Ignore item marked -2-.

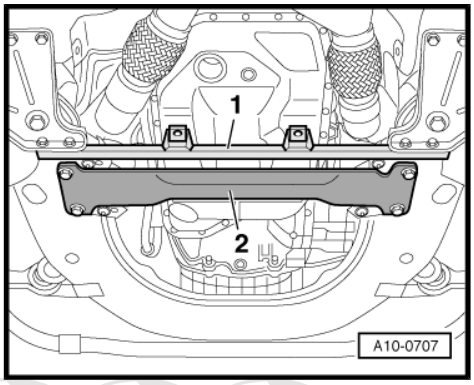

– Mark the installation position of subframe with a felt-tipped pen on longitudinal member.
– Unscrew bolts -1-.
– Unscrew bolts -2- and -4- in a diagonal sequence and in stages.

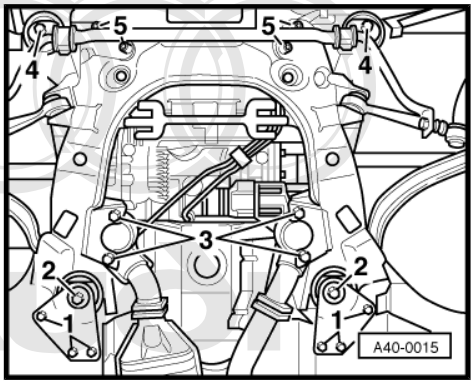

Note

- *Ignore items marked -3- and -5-.*
- *Check that all hoses and wiring connections between engine, gearbox, subframe and body have been detached.*
- *Carefully guide out engine/gearbox assembly with subframe from engine compartment when lowering to avoid damage.*

Protected by copyright. Copying for private or commercial purposes, in part or in whole, is not permitted unless authorised by AUDI AG. AUDI AG does not guarantee or accept any liability with respect to the correctness of information in this document. Copyright by AUDI AG.

– Slowly lower the engine/gearbox assembly approx. 20 cm.

Vehicles with auxiliary heater:

– Disconnect the coolant hose -arrow- by reaching through the wheel housing (right-side) into the area above the gearbox.

All models:

– Lower the scissor-type assembly platform -VAS 6131- slowly all the way down.

– Pull the scissor-type assembly platform -VAS 6131- from beneath the vehicle.

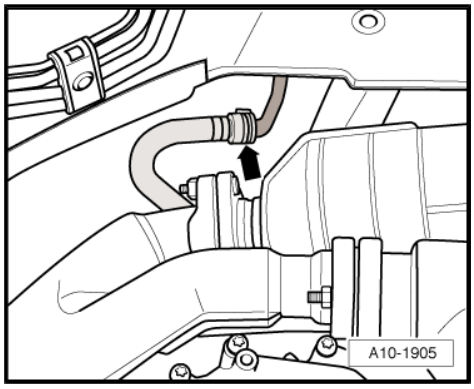

2.3 Separating engine and gearbox

Note

♦ *Reinstall heat insulation sleeves in the same locations when assembling.*

♦ *Reinstall all cable ties in the same locations when assembling.*

• Engine/gearbox assembly removed and secured to scissor-type assembly platform -VAS 6131- .

– Pry off the heat insulation sleeve for wiring harness from the subframe at the location marked with an -arrow-.

Protected by copyright. Copying for private or commercial purposes, in part or in whole, is not permitted unless authorised by AUDI AG. AUDI AG does not guarantee or accept any liability with respect to the correctness of information in this document. Copyright by AUDI AG.

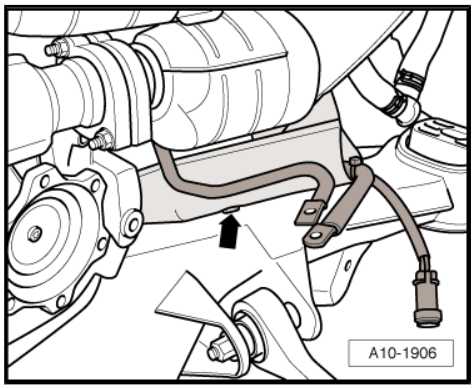

– Unscrew bottom bolts -arrows- at engine mountings.

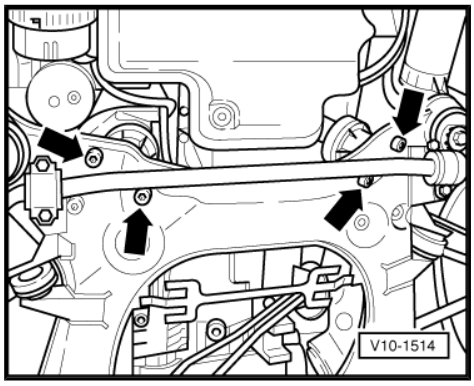

– Unscrew nuts and bolts -1- and -2-, as well as -5- and -6- for gearbox mounting (left and right).

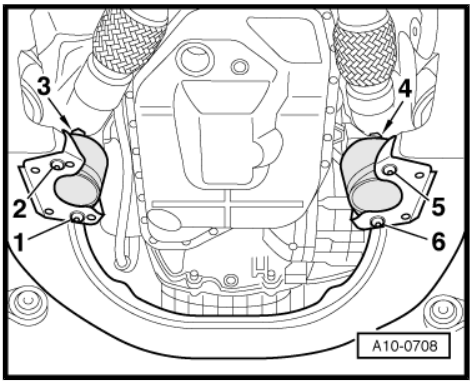

Note

Ignore items marked -3- and -4-.

– Screw down spindles of the 4 support elements (left and right) at subframe as far as possible.

– Remove the locating lugs -VAS 6131/10-7- and -VAS 6131/10-8- from the spindles.

– Remove subframe to the side.

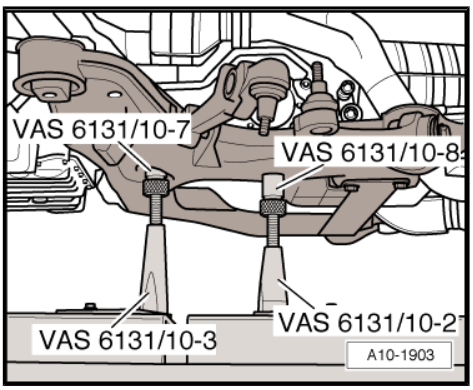

Note

A second mechanic is required for removing the subframe.

– Unscrew the 4 base plates for support elements (for subframe) at assembly platform -VAS 6131- .

– Unscrew both bottom bolts -arrows- at engine/gearbox connection.

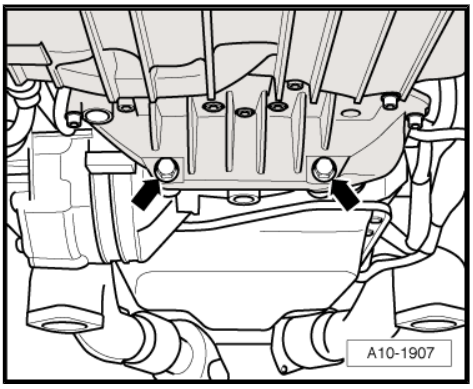

Protected by copyright. Copying for private or commercial purposes, in part or in whole, is not permitted unless authorised by AUDI AG. AUDI AG does not guarantee or accept any liability with respect to the correctness of information in this document. Copyright by AUDI AG.

Note

The mounting points for engine (front) and gearbox (rear) remain unchanged.

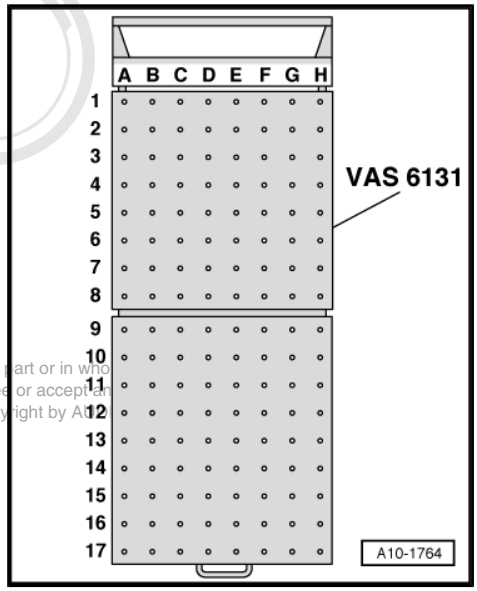

– Set up the scissor-type assembly platform -VAS 6131- with support set -VAS 6131/10- and -VAS 6131/11- as follows:

Platform coordi-nates	Parts of support set -VAS 6131/10- and -VAS 6131/11-			
D2 4)	/10-1	/10-4	/10-5	/11-1
G2 4)	/10-1	/10-4	/10-5	/11-1
C7	/10-1	/10-4	/10-5	/10-8
G7	/10-1	/10-4	/10-5	/10-8
B10	/10-1	/10-4	/10-5	/11-3
G10	/10-1	/10-4	/10-5	/10-10
D17 4)	/10-1	/10-4	/10-5	/11-2

4) Support elements remain unchanged.

Protected by copyright. Copying for private or commercial purposes, in part or in whole, is not permitted unless authorised by AUDI AG. AUDI AG does not guarantee or accept any liability with respect to the correctness of information in this document. Copyright by AUDI AG.

– Place the support elements from support set -VAS 6131/10- and -VAS 6131/11- at left of engine/gearbox, as shown in the illustration.

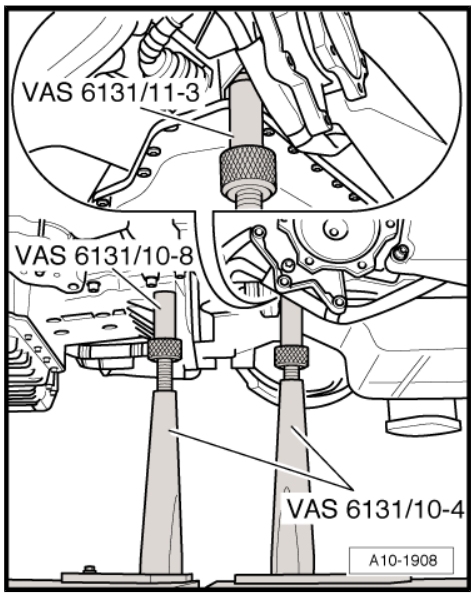

– Place the support elements from support set -VAS 6131/10- at right of engine/gearbox, as shown in the illustration.
– Turn spindles for the support elements upwards until all locating lugs make contact with the mounting points.
– Tighten base plates for support elements to scissor-type assembly platform -VAS 6131- to 20Nm.

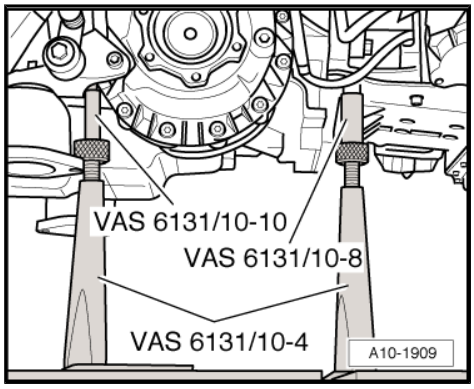

– Unbolt bracket for electrical connectors from left side of intake manifold -arrows-.

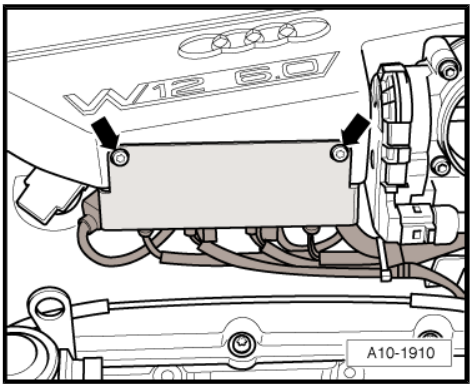

– Disconnect electrical connectors -1 ... 4- going to Lambda probes on left side of engine and move wires clear.

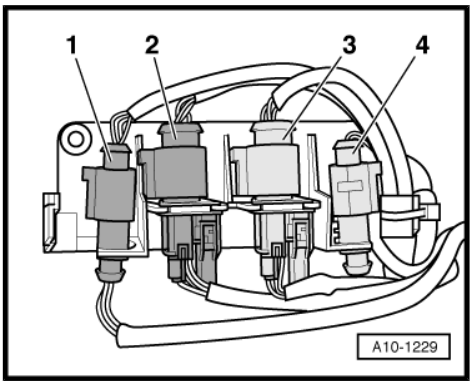

– Unbolt bracket for intermediate pipe (left-side) -arrows-.

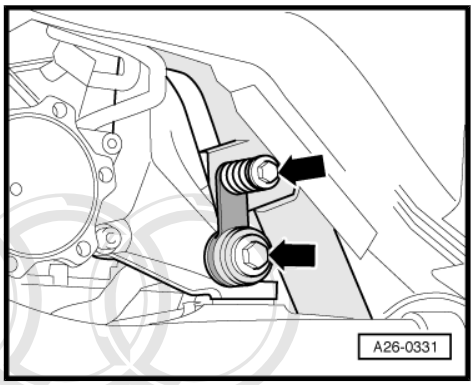

– Unbolt starter catalytic converters (left-side) from exhaust manifolds -arrows-.
– Detach the exhaust pipes (left-side).

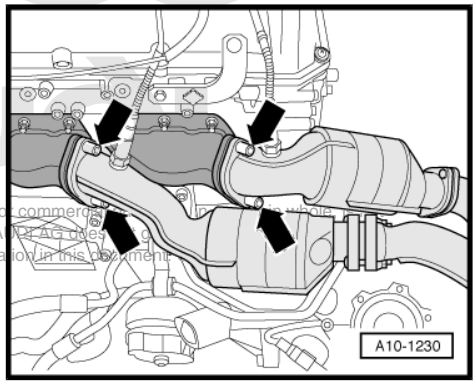

Protected by copyright. Copying for private or commercial purposes, in part or in whole, is not permitted unless authorised by AUDI AG. AUDI AG does not guarantee or assume any liability with respect to the correctness of information in this document.

– Unbolt bracket for electrical connectors from right side of intake manifold -arrows-.

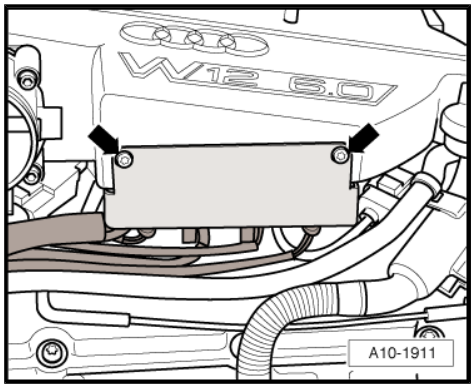

– Disconnect electrical connectors -1 ... 4- going to Lambda probes on right side of engine and move wires clear.

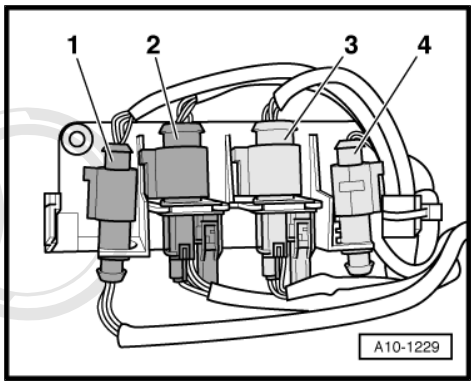

– Unbolt bracket for intermediate pipe (right-side) -arrows-.

Protected by copyright. Copying for private or commercial purposes, in part or in whole, is not permitted unless authorised by AUDI AG. AUDI AG does not guarantee or accept any liability with respect to the correctness of information in this document. Copyright by AUDI AG.

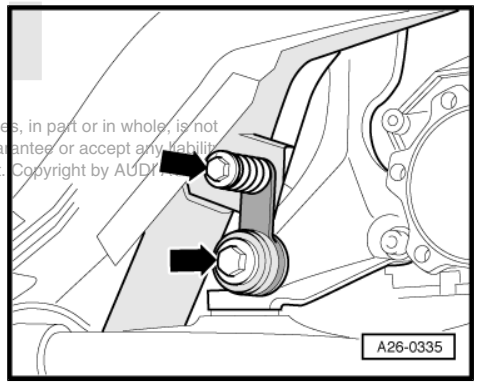

– Unbolt starter catalytic converters (right-side) from exhaust manifolds -arrows-.
– Detach the exhaust pipes (right-side).

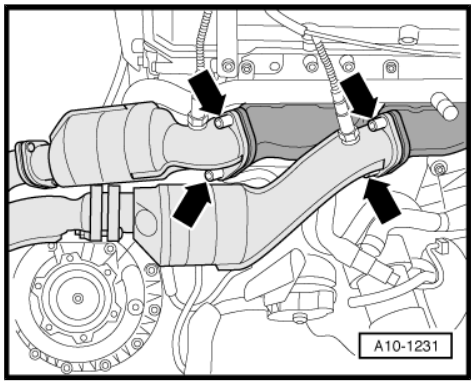

Note

To prevent damage to the air conditioner compressor and refrigerant pipes/hoses, ensure that the pipes and hoses are not stretched, kinked or bent.

– Unscrew bolts and nuts -arrows- and detach refrigerant lines.

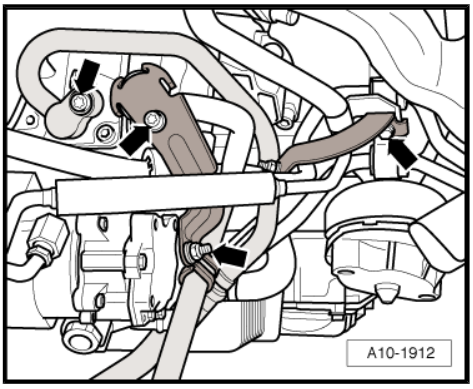

Note

Note the rules for cleanliness when working on the automatic gearbox ⇒ Automatic gearbox 01L, four-wheel drive; Rep. Gr. 37 .

– Unscrew bolt -arrow- and detach ATF pipes from gearbox.

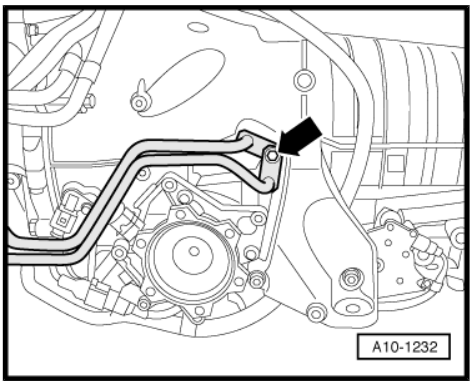

– Remove gearbox support (left-side) -arrows-.

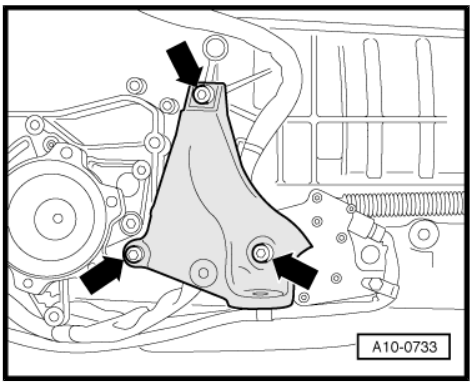

Protected by copyright. Copying for private or commercial purposes, in part or in whole, is not permitted unless authorised by AUDI AG. AUDI AG does not guarantee or accept any liability with respect to the correctness of information in this document. Copyright by AUDI AG.

– Remove the heat insulation sleeves from the electrical connectors -1- and -3-.
– Unplug electrical connectors -1 ... 5- and move electrical wires clear.

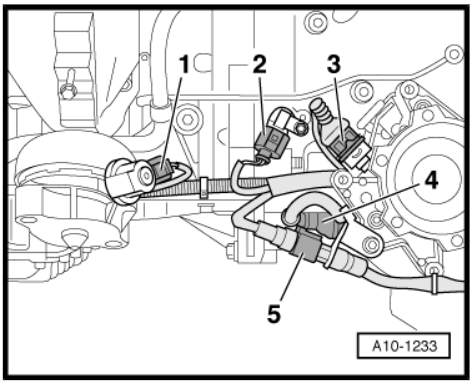

– Detach electrical connector -arrow- at gearbox output speed sender -G195- and move wire clear.

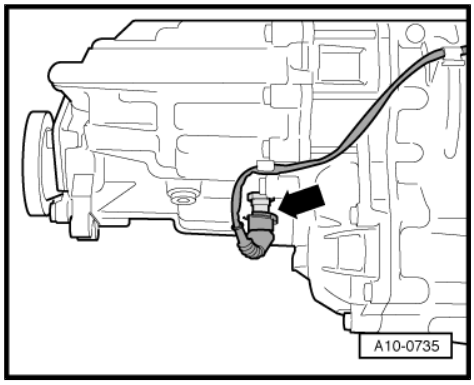

– Remove heat insulation sleeve from electrical connector -2- and unplug electrical connector at engine mounting (right-side).
– Unbolt clamps -1- and -4-.
– Unbolt coolant pipes from bracket -3-.
– Remove engine support (right-side) -arrows-.

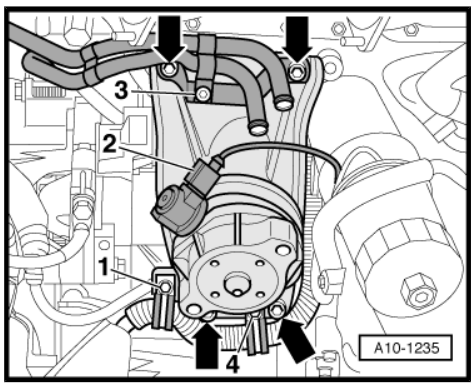

– Unscrew bolts -arrows-.
– Detach wiring -1- and -2- at starter and remove starter.
– Move electrical wiring on right of gearbox clear.

Protected by copyright. Copying for private or commercial purposes, in part or in whole, is not permitted unless authorised by AUDI AG. AUDI AG does not guarantee or accept any liability with respect to the correctness of information in this document. Copyright by AUDI AG.

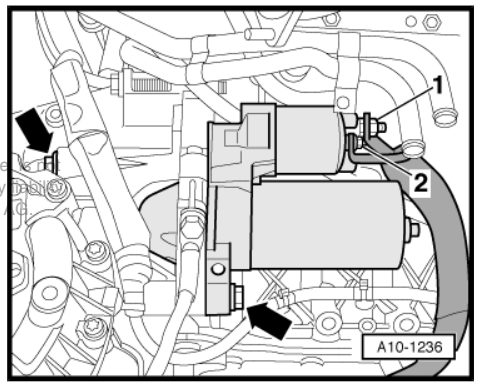

– Unscrew 6 bolts -arrows- for torque converter through opening of removed starter (turn crankshaft $^{1}/_{3}$ turn each time).

Note

When loosening torque converter bolts, counterhold at the crankshaft central bolt.

– Unscrew securing bolts for engine/gearbox.

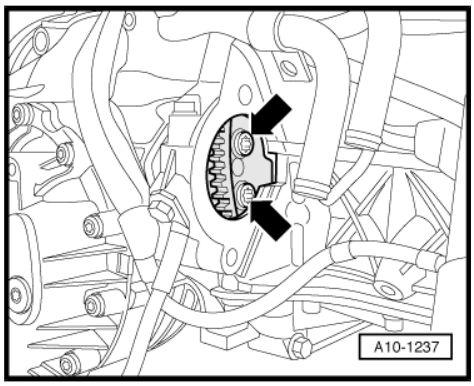

– Loosen the clamping bolts -1- on sides of scissor-type assembly platform -VAS 6131- and pull rear section of platform together with the gearbox towards rear -arrow-; simultaneously separate the torque converter from the drive plate through the opening.

– Secure the torque converter in gearbox to prevent it falling out.

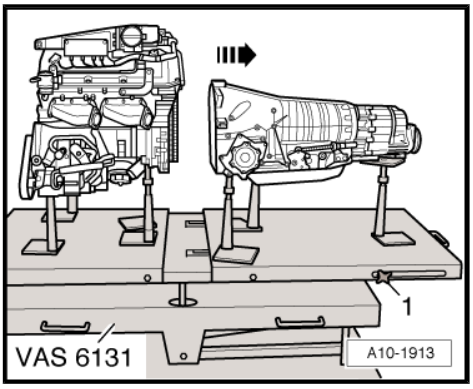

Note

- *The engine must not be placed down on its sump after removing it from the scissor-type assembly platform -VAS 6131- .*
- *In order to perform repairs, lift engine using workshop crane -VAS 6100- and secure engine to engine stand -VAS 6095- .*

Protected by copyright. Copying for private or commercial purposes, in part or in whole, is not permitted unless authorised by AUDI AG. AUDI AG does not guarantee or accept any liability with respect to the correctness of information in this document. Copyright by AUDI AG.

2.4 Securing engine to engine stand

Special tools and workshop equipment required

- Shackle -10-222 A/12-
- Lifting tackle -3033-
- Engine stand -VAS 6095-
- Workshop crane -VAS 6100-
- Extension -VAS 6101-

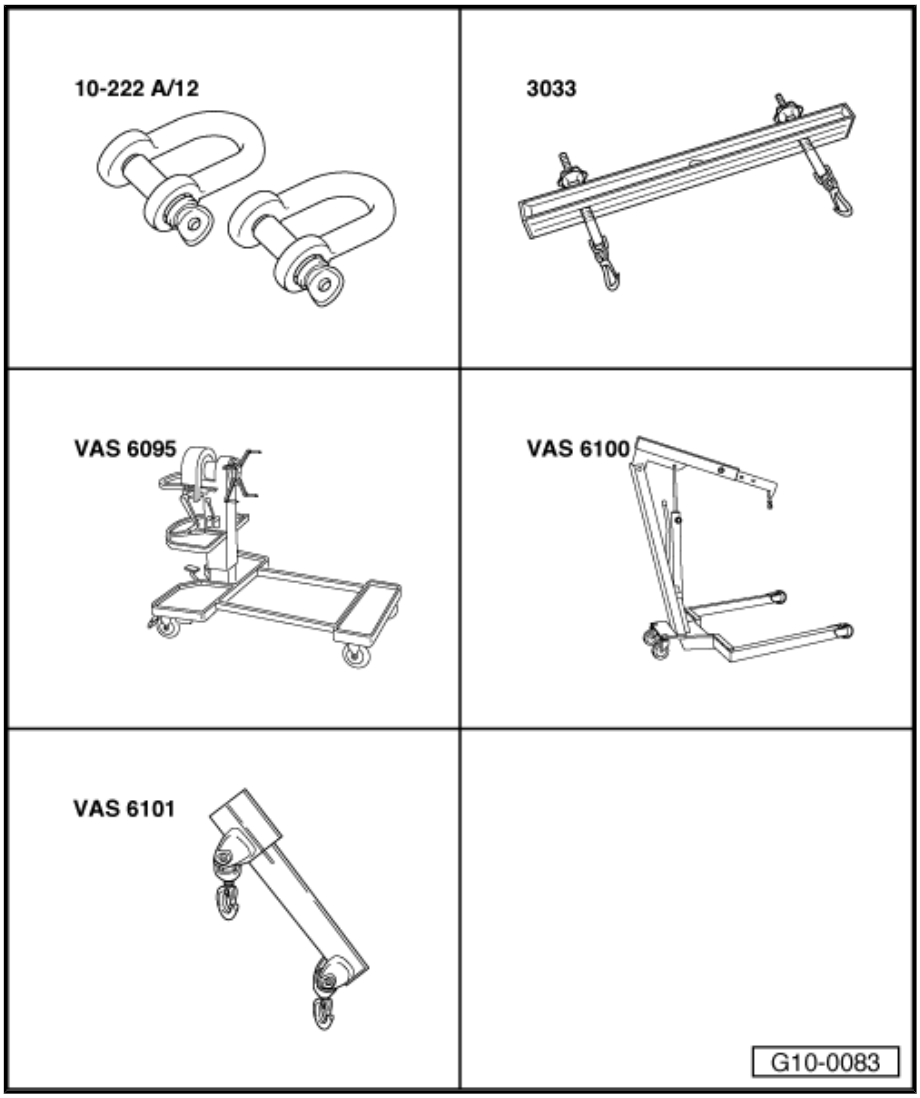

2.4.1 Procedure

- Engine separated from gearbox ⇒ page 24 .

– Attach a shackle -10-222 A/12- to the engine lifting eye (rear right).
– Attach the extension -VAS 6101- to workshop crane -VAS 6100- .
– Attach the lifting tackle -3033- to workshop crane -VAS 6100- as shown in the illustration.
– Lift engine off the support elements on scissor-type assembly platform -VAS 6131- .

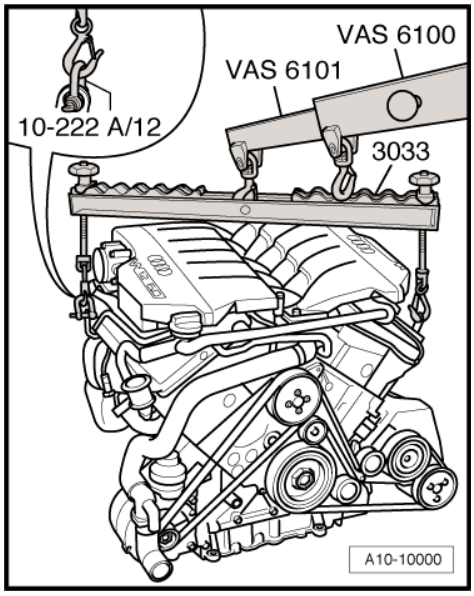

– Secure the engine to engine stand -VAS 6095- as shown in the illustration.

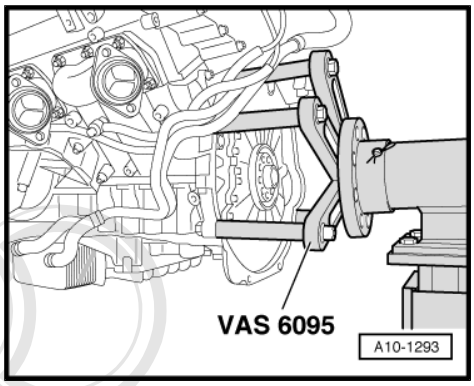

2.5 Installing

Installation is carried out in the reverse order; note the following:

This document is intended for personal use. Commercial purposes, in part or in whole, is not permitted. Offers and prices by AUDI AG. AUDI AG does not guarantee or accept any liability with respect to the correctness of information in this document. Copyright by AUDI AG.

Note

- *On assembly, renew oil seals and gaskets as well as self-locking nuts and bolts that are tightened by turning through to a specified angle.*
- *Reinstall heat insulation sleeves in the same locations when assembling.*
- *Secure all hose connections with the correct type of hose clips (same as original equipment) ⇒ Parts catalogue.*
- *Reinstall all cable ties in the same locations when assembling.*

– Check whether dowel sleeves for centring the engine/gearbox assembly are fitted in the cylinder block; install dowel sleeves if necessary.
– To secure torque converter on drive plate, only use correct bolts (same as original equipment) as specified in ⇒ Parts catalogue .

Checking installation position of torque converter

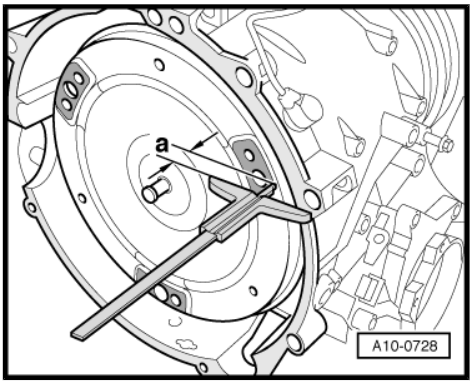

If the torque converter has been correctly installed, the distance -a- between the contact surfaces at the threaded holes in the torque converter and the joint surface on the torque converter bell housing for automatic gearbox 01L is approx. 22 mm.

If the torque converter has not been completely inserted, this distance will be approx. 10 mm.

Caution

If the torque converter is not installed correctly, the torque converter drive plate and the ATF pump will be seriously damaged when the gearbox is joined to the engine.

– Bolt gearbox to engine.

Caution

Before and during tightening of bolts on engine/gearbox flange, continually check that the torque converter behind the drive plate can be turned. If the converter cannot be turned, it must be assumed that it has not been installed correctly and the drive plate of the ATF pump and consequently the gearbox will be damaged during final tightening of bolt connections.

Note

- *Tightening torques only apply to lightly greased, oiled, phosphated or blackened nuts and bolts.*
- *Additional lubricant such as engine oil or gearbox oil may be used, but do not use lubricant containing graphite.*
- *Do not use degreased parts.*
- *Tolerance for tightening torques ± 15%.*

Protected by copyright. Copying for private or commercial purposes, in part or in whole, is not permitted unless authorised by AUDI AG. AUDI AG does not guarantee or accept any liability with respect to the correctness of information in this document. Copyright by AUDI AG.

Securing engine to gearbox

Item	Bolt	Nm
1, 7, 10	M12×50	65
2, 5, 6, 8	M12×80	65
3	M10×160	65 5)
4	M12×90	65
9	M12×67	65
A	Dowel sleeves for centring	

5) Bolt strength 10.9

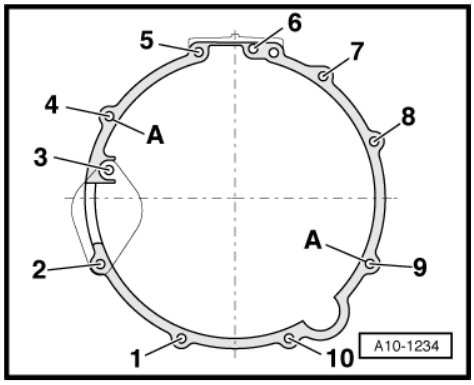

– Secure torque converter to drive plate.

> **Caution**
>
> *Take note of the correct routing of the electrical wiring at engine ⇒ page 40 .*

– Secure the ATF pipes ⇒ Automatic gearbox 01L, four-wheel drive; Rep. Gr. 37 .

– Install refrigerant lines ⇒ Air conditioning system; Rep. Gr. 87

– Secure starter catalytic converters and intermediate pipes at engine ⇒ page 196 .

– The threaded holes in the flange shaft for the propshaft on the gearbox must be cleaned of remaining locking fluid with a thread tap before assembling.

– Screw down the spindles for support elements - VAS 6131/10-8- and -VAS 6131/11-3- (left-side) at engine/ gearbox assembly.

– Unscrew both base plates for support elements (left-side) at scissor-type assembly platform -VAS 6131- .

Protected by copyright. Copying for private or commercial purposes, in part or in whole, is not permitted unless authorised by AUDI AG. AUDI AG does not guarantee or accept any liability with respect to the correctness of information in this document. Copyright by AUDI AG.

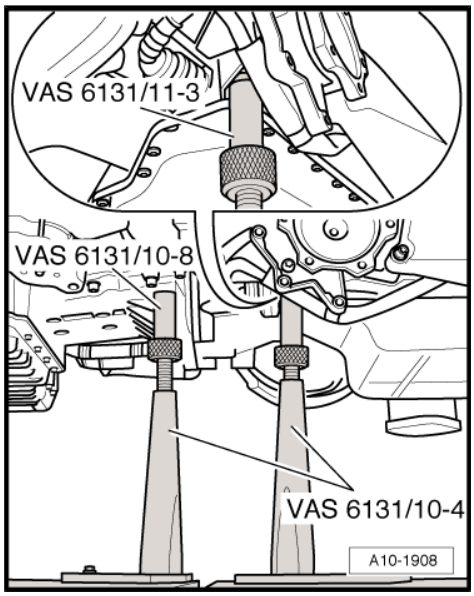

– Screw down the spindles for support elements -VAS 6131/10-8- and -VAS 6131/10-10- (right-side) at engine/gearbox assembly.

– Unscrew both base plates for support elements (right-side) at scissor-type assembly platform -VAS 6131- .

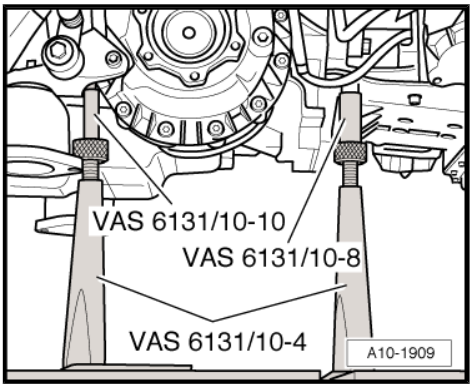

Note

The mounting points for engine (front) and gearbox (rear) remain unchanged.

– Set up the scissor-type assembly platform -VAS 6131- with support set -VAS 6131/10- and -VAS 6131/11- as follows:

Platform coordi-nates	Parts of support set -VAS 6131/10- and -VAS 6131/11-			
D2 6)	/10-1	/10-4	/10-5	/11-1
G2 6)	/10-1	/10-4	/10-5	/11-1
C7	/10-1	/10-3	/10-5	/10-7 7)
G7	/10-1	/10-3	/10-5	/10-7 7)
B10	/10-1	/10-2	/10-5	/10-8 7)
G10	/10-1	/10-2	/10-5	/10-8 7)
D17 6)	/10-1	/10-4	/10-5	/11-2

6) Support elements remain unchanged.

7) Secure support elements only after installing the subframe.

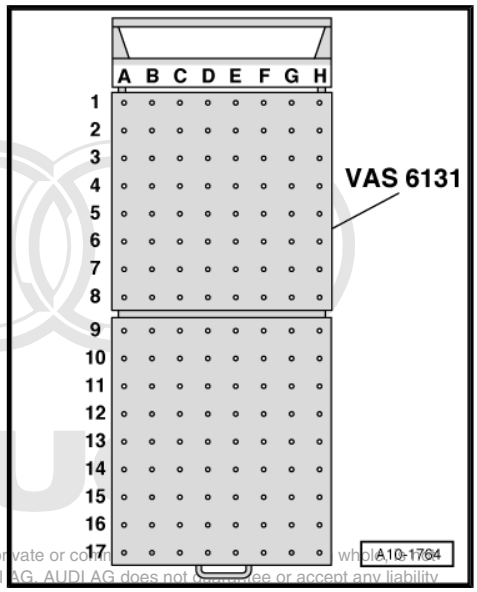

Protected by copyright. Copying for private or commercial purposes, in whole or in part, is not permitted unless authorised by AUDI AG. AUDI AG does not guarantee or accept any liability with respect to the correctness of information in this document. Copyright by AUDI AG.

Note

A second mechanic is required for securing the subframe to the support elements.

– Place the subframe down onto support elements -VAS 6131/10-7- and -VAS 6131/10-8- .

– Screw up the spindles for support elements -VAS 6131/10-7- and -VAS 6131/10-8- on both sides.

– Tighten base plates for support elements to scissor-type assembly platform -VAS 6131- to 20Nm.

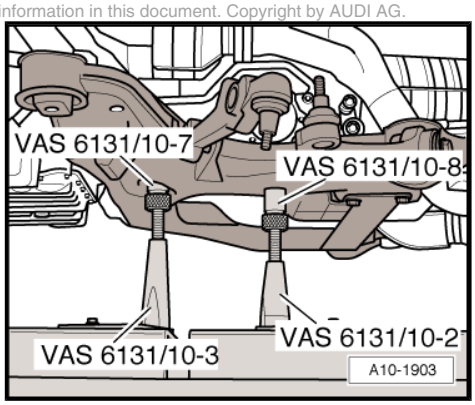

– Secure the heat insulation sleeve for wiring harness at subframe at the location marked with an -arrow-.

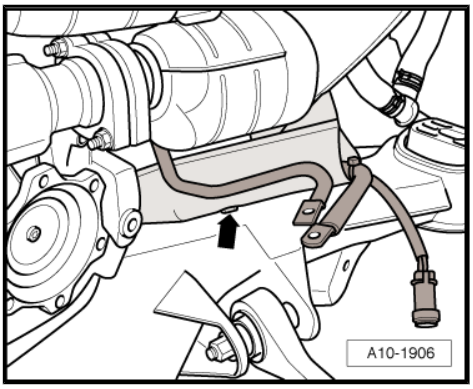

– Tighten bolts -arrows- for engine mountings on both sides.

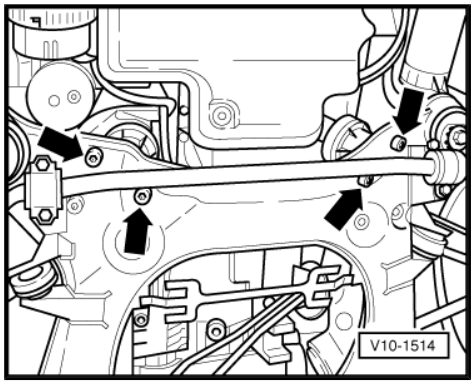

– Tighten bolts -1- and -2- for gearbox mountings on both sides.

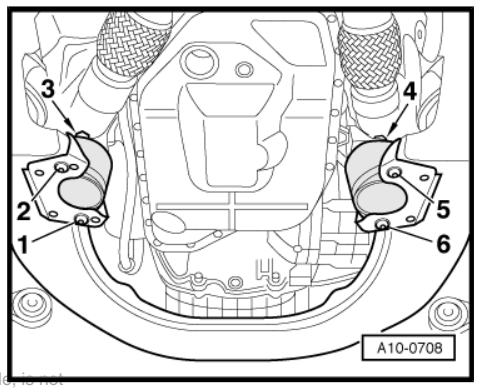

Note

Ignore items marked -3- and -4-.

– Guide engine gearbox assembly together with subframe into the body from below using scissor-type assembly platform - VAS 6131- .

Protected by copyright. Copying for private or commercial purposes, in part or in whole, is not permitted unless authorised by AUDI AG. AUDI AG does not guarantee or accept any liability with respect to the correctness of information in this document. Copyright by AUDI AG.

Vehicles with auxiliary heater:

– Attach the coolant hose -arrow- by reaching through the wheel housing (right-side) into the area above the gearbox.

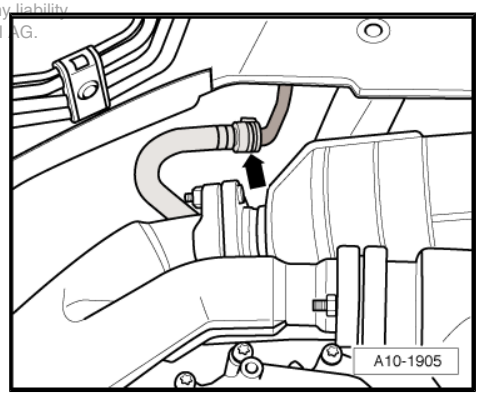

All models:

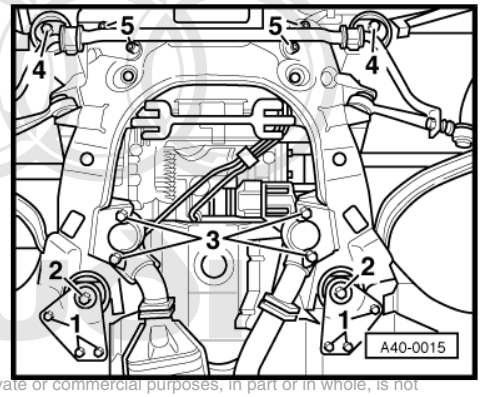

- Adjust the subframe according to the markings previously made on the longitudinal members.
- Renew the bolts and washers for subframe.
- Only tighten bolts for subframe to the specified torque (do not turn further); tighten bolts only after performing alignment check.

1 - 25 Nm

2 - 150 Nm

4 - 150 Nm

Protected by copyright. Copying for private or commercial purposes, in part or in whole, is not permitted unless authorised by AUDI AG. AUDI AG does not guarantee or accept any liability with respect to the correctness of information in this document. Copyright by AUDI AG.

Note

Ignore items marked -3- and -5-.

WARNING

The vehicle must not be driven at this stage.

- Tighten the securing nuts and bolts -arrows- for torque reaction support.

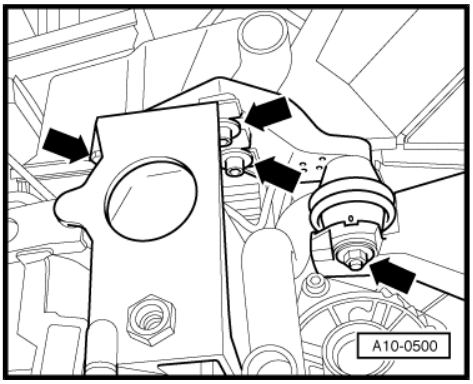

– Tighten oil drain plugs -1- and -3-.

– Install connecting lines -2- and -4-

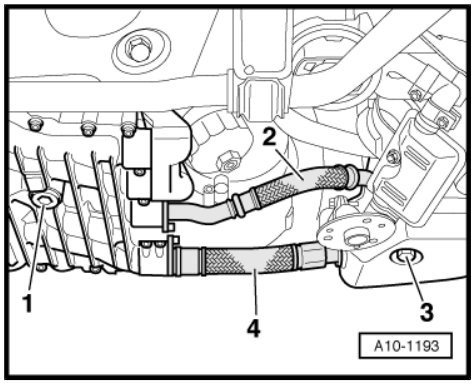

Note

Ensure that the connecting lines have sufficient clearance from alternator; rotate the lines as necessary.

Perform further installation in reverse order, paying attention to the following:

– Install the propshaft ⇒ Automatic gearbox 01L, four-wheel drive; Rep. Gr. 39

– Install the selector lever cable; check adjustment if necessary ⇒ Automatic gearbox 01L, four-wheel drive; Rep. Gr. 37

– Install the main catalytic converter (left-side) ⇒ page 196 .

– Align the exhaust system free of stress ⇒ page 205 .

– Install drive shafts ⇒ Running gear, front-wheel drive and four-wheel drive; Rep. Gr. 40 .

– Install guide link, track control link and anti-roll bar ⇒ Running gear, front-wheel drive and four-wheel drive; Rep. Gr. 40 .

– Topping up engine oil after repairs ⇒ page 143 .

– Install lock carrier with attachments ⇒ General body repairs, exterior; Rep. Gr. 50 .

– Install front bumper ⇒ General body repairs, exterior; Rep. Gr. 63 .

– Electrical connections and routing ⇒ Current flow diagrams, Electrical fault finding and Fitting locations.

Caution

Do not use a battery charger to boost starting. There is danger of damaging the vehicle control units.

Note

- *When the battery is reconnected, please ensure that the vehicle equipment (e.g. radio, radio/navigation system, clock, electric window lifters) is activated as described in the operating instructions.*
- *Deactivate the service mode of the telematics control unit ⇒ Radio, telephone and navigation self-diagnosis; Rep. Gr. 01 .*
- *Further procedures after reconnecting the voltage supply ⇒ Motronic ignition and injection system (12-cyl.); Rep. Gr. 24 .*

– Before starting engine the first time, top up the power steering reservoir with hydraulic fluid; the power steering pump must not run dry.

– Charge the refrigerant system ⇒ Air conditioner system - with refrigerant R134a .

– Renew engine coolant ⇒ page 152 .

– Check oil level ⇒ page 140 .

Protected by copyright. Copying for private or commercial purposes, in part or in whole, is not permitted unless authorised by AUDI AG. AUDI AG does not guarantee or accept any liability with respect to the correctness of information in this document. Copyright by AUDI AG.

– Check ATF fluid level ⇒ Automatic gearbox 01L, four-wheel drive; Rep. Gr. 37

– Perform alignment check ⇒ Running gear, front-wheel drive and four-wheel drive; Rep. Gr. 44 .

WARNING

Tighten bolts for subframe according to specifications after performing alignment check.

– Check headlight adjustment ⇒ Electrical system; Rep. Gr. 94 .

2.6 Tightening torques

Protected by copyright. Copying for private or commercial purposes, in part or in whole, is not permitted unless authorised by AUDI AG. AUDI AG does not guarantee or accept any liability with respect to the correctness of information in this document. Copyright by AUDI AG.

Note

- *Tightening torques only apply to lightly greased, oiled, phosphated or blackened nuts and bolts.*
- *Additional lubricant such as engine oil or gearbox oil may be used, but do not use lubricant containing graphite.*
- *Do not use degreased parts.*
- *Tolerance for tightening torques ± 15%.*

Component		Nm
Bolts/nuts	M6	9
	M8	20
	M10	40
	M12	65
Except for the following:		
Drive plate to torque converter	M10×1	70
Gearbox support to gearbox		40
Starter wire		16
Engine support to engine		42
ATF line to	Gearbox	20
	Bracket	10
Engine mounting to subframe		40
Gearbox mounting to subframe		40
Cross piece to subframe		23
Drive shaft heat shield to gearbox		23
Torque reaction support to longitudinal member		40
Mounting for torque reaction support to bracket for torque reaction support		40
Electrical wire to junction box		20
Earth cable to longitudinal member		23
Connecting lines to sump and oil reservoir		8
Refrigerant line with reinforcement to air conditioner compressor		25

Component	Nm
Retaining clip for refrigerant line to reinforcement	10
Refrigerant line to air conditioner compressor	25
Refrigerant line to reservoir	23
Refrigerant line to condenser	20
Banjo bolt for hydraulic pressure line to power steering pump	47
Union nut for hydraulic pressure line to power steering pump	32
Body brace to bracket	23
Hose clips for coolant hoses	2
Battery cable clamp to battery terminal	6

2.7 Wire routing on engine

Reproduction for private or commercial purposes, in part or in whole, is not permitted unless authorised by AUDI AG. AUDI AG does not guarantee or accept any liability with respect to the correctness of information in this document. Copyright by AUDI AG.

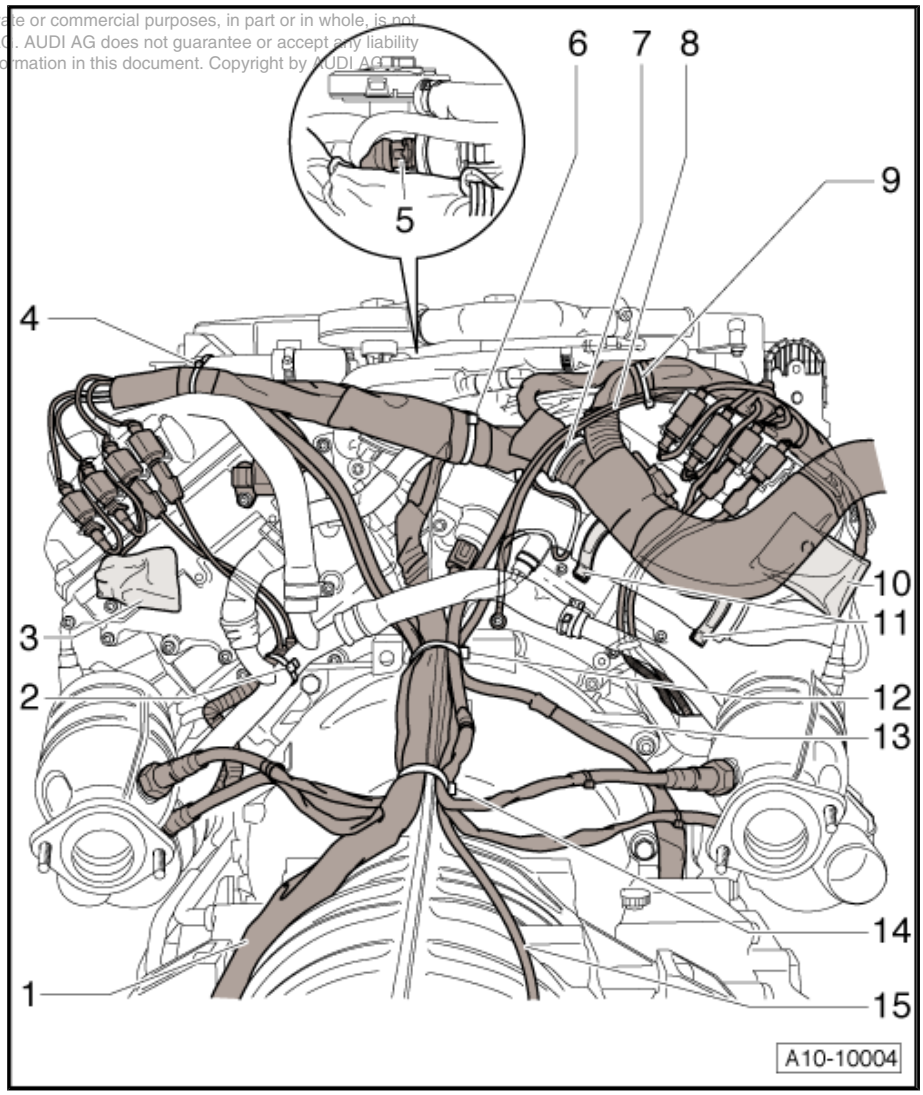

1 - Wiring harness (gearbox, left-side)

2 - Knock sensor wires

- ❑ Attached with cable tie to coolant pipe
- ❑ Routing of wire ⇒ Item 1 (page 41)

3 - Heat insulation sleeve

- ❑ Attach to Hall sender 4 - G301-

4 - Cable tie

- ❑ For securing the wiring harness and the Lambda probe wires to bracket for crankcase breather pipe.
- ❑ Note securing location on wiring harness

5 - Release clip for connector

- ❑ Ensure sufficient clearance between wiring harness and release clip for connector

6 - Cable tie

- ❑ Note securing location on wiring harness when securing

7 - Screw-type clip

- ❑ Turn anti-clockwise as far as the stop and attach to wiring harness only at securing location

8 - Lambda probe wires

- ❑ Lay over the wiring harness

9 - Cable tie

- ❑ Note securing location when securing wiring harness and Lambda probe wires at bracket

10 - Heat insulation sleeve

- ❑ Attach to Hall sender 3 -G300-

11 - Spring-type clip

- ❑ Must not face upwards, otherwise the wiring harness will become damaged

12 - Cable tie

- ❑ For securing the wiring harnesses to gearbox

13 - Wiring harness

- ❑ To engine mounting and oil pressure switch -F1-

14 - Cable tie

- ❑ For securing the wiring harnesses to gearbox

15 - Wiring harness

- ❑ To gearbox output speed sender -G195-

I - Cylinder bank 2 (left-side)

1 - Attach knock sensor wires to coolant pipe with cable tie

2 - Lay wires for knock sensors in this area between the coolant pipe and cylinder block

3 - Lay the wires for knock sensors in this area over the coolant pipe

4 - Lay wires for knock sensors in this area between the coolant pipe and cylinder block

II - Cylinder bank 1 (right-side)

5 - Cable tie

- ❑ For securing the wires for knock sensors at bracket
- ❑ Make sure that the electrical connectors are not pulled downwards

6 - Knock sensor wires

- ❑ Lay over the coolant pipe -arrow A- and between the coolant pipe -arrow B- and cylinder block

7 - Earth cable

- ❑ Lay in a vertical loop between engine and coolant pipe

8 - Bracket

- ❑ The bracket must lie against projection for bolt

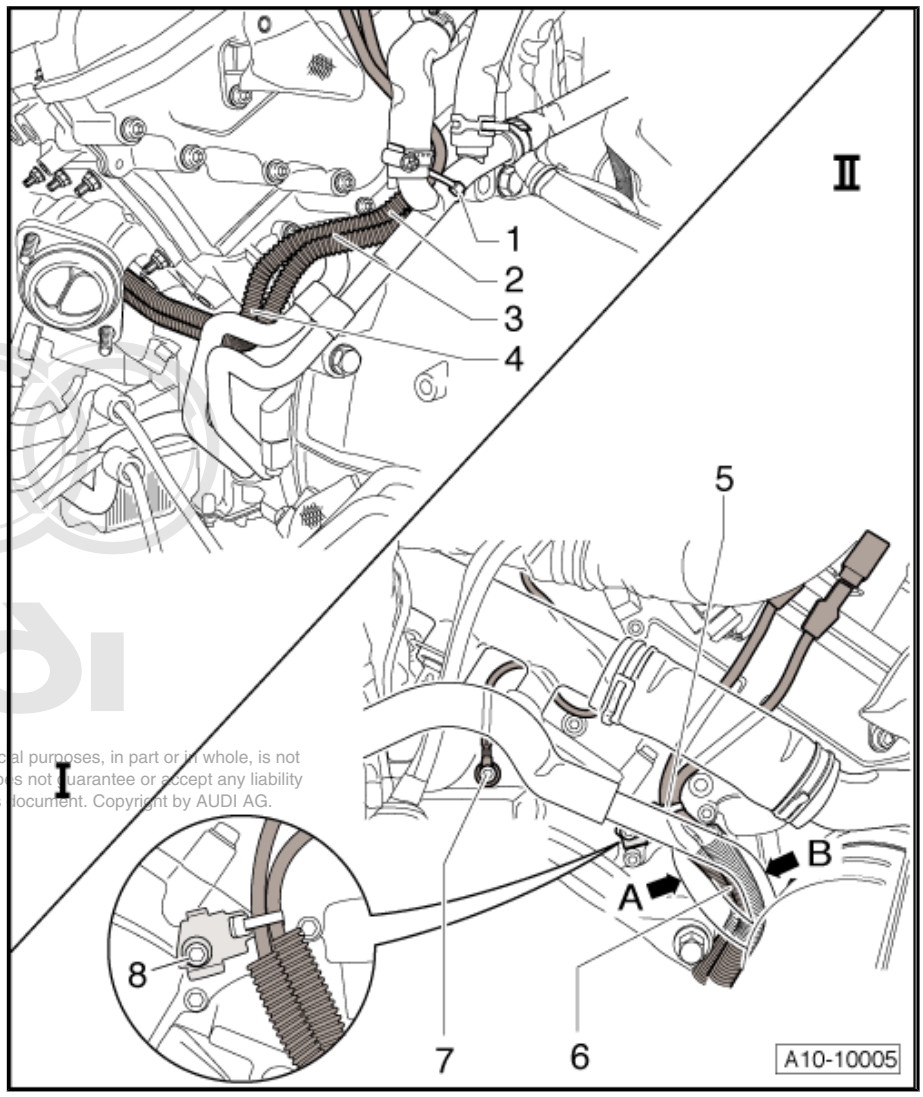

Protected by copyright. Copying for private or commercial purposes, in part or in whole, is not permitted unless authorised by AUDI AG. AUDI AG does not guarantee or accept any liability with respect to the accuracy of this document. Copyright by AUDI AG.

13 – Crankshaft group

1 Lock carrier

1.1 Pulling lock carrier forwards

Special tools and workshop equipment required

- Hose clamps for hoses up to 25 mm Ø -3094-
- Front-end service sleeves -3369-
- Drip tray -V.A.G 1306-
- Drip tray

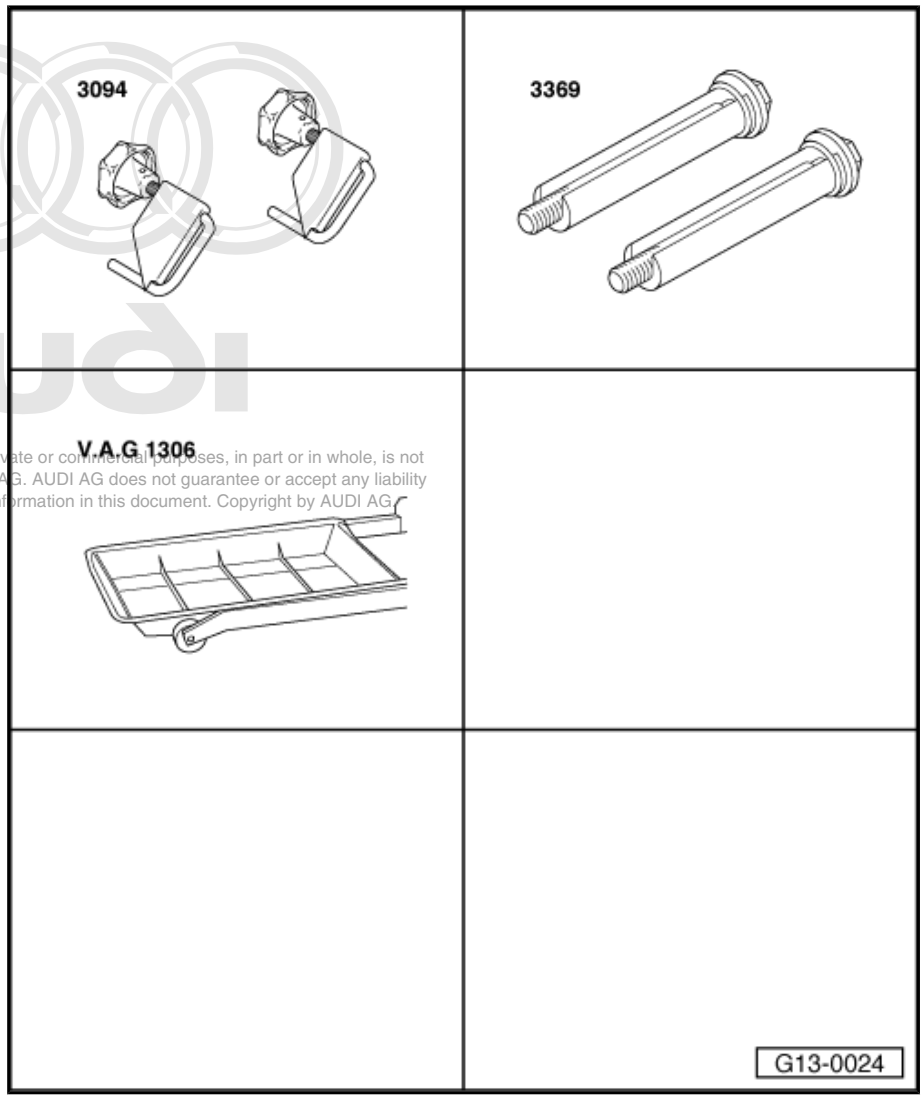

Protected by copyright. Copying for private or commercial purposes, in part or in whole, is not permitted unless authorised by AUDI AG. AUDI AG does not guarantee or accept any liability with respect to the correctness of information in this document. Copyright by AUDI AG.

1.1.1 Procedure

The lock carrier does not necessarily need to be removed completely for all service procedures. It is sufficient to pull it forward as described in the following.

> ⚠ **WARNING**
>
> *Hot steam/hot coolant may escape when opening expansion tank; cover filler cap with cloth and open carefully.*

– Open filler cap on coolant expansion tank.

– Vehicles with auxiliary heater: remove bolts -arrows- securing exhaust pipe for auxiliary/additional heater to noise insulation.

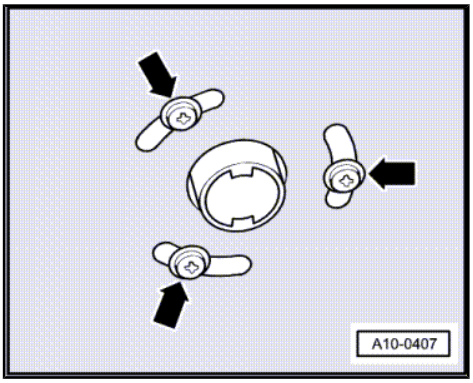

– Loosen quick release fasteners -1- and remove noise insulation.

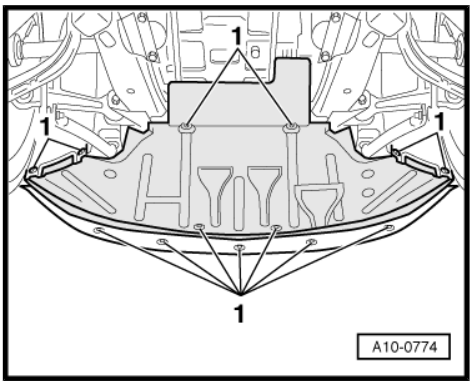

– Place drip tray -V.A.G 1306- under engine.
– Disconnect coolant hose at bottom of oil cooler -arrow- and drain off coolant.

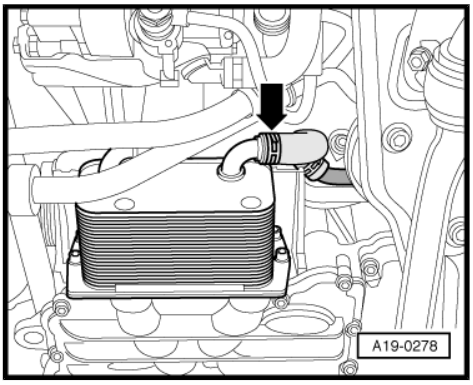

– Disconnect coolant hoses from radiator (bottom right) -arrows- and drain off coolant.

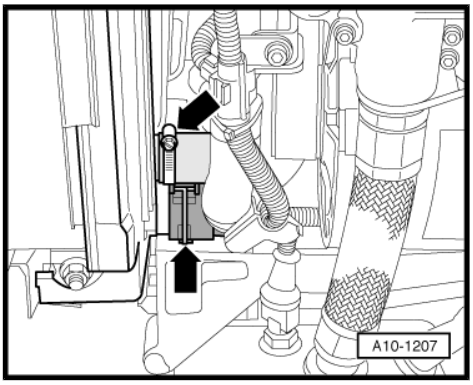

Protected by copyright. Copying for private or commercial purposes, in part or in whole, is not permitted unless authorised by AUDI AG. AUDI AG does not guarantee or accept any liability with respect to the correctness of information in this document. Copyright by AUDI AG.

– Place drip tray underneath.

– Unbolt ATF line -arrow- from bottom of radiator.

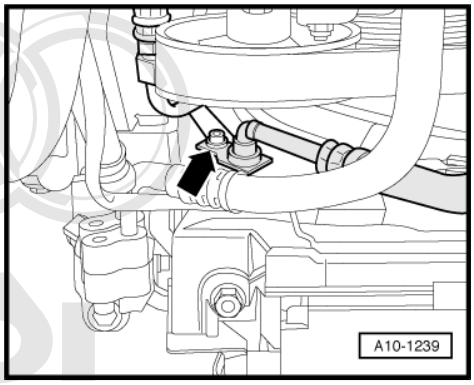

Note

Note the rules for cleanliness when working on the automatic gearbox ⇒ Automatic gearbox 01L, four-wheel drive; Rep. Gr. 37 .

– Loosen both front wheel housing liners at front.

– Release retaining clips -1- and -2- and remove air intake grille (left and right).

Protected by copyright. Copying for private or commercial purposes, in part or in whole, is not permitted unless authorised by AUDI AG. AUDI AG does not guarantee or accept any liability with respect to the correctness of information in this document. Copyright by AUDI AG.

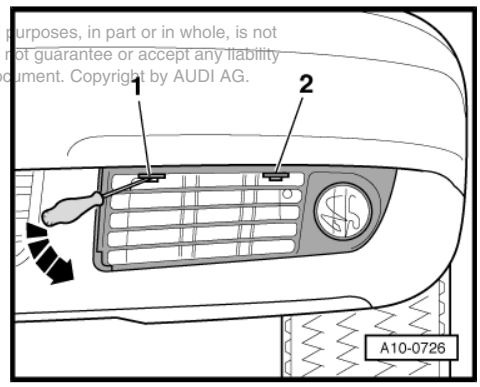

– Unscrew the bolt in the opening -arrow- in the bumper (left and right).

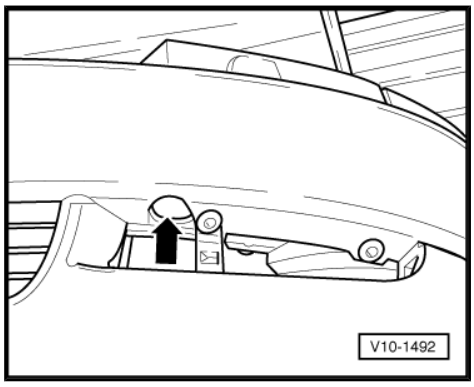

– Pull bumper forwards slightly and disconnect electrical connector -1-.

– Clamp off hose for headlight washer system before T-connection with hose clamp -3094- .

– Detach hose at T-connection.

– Remove the bumper.

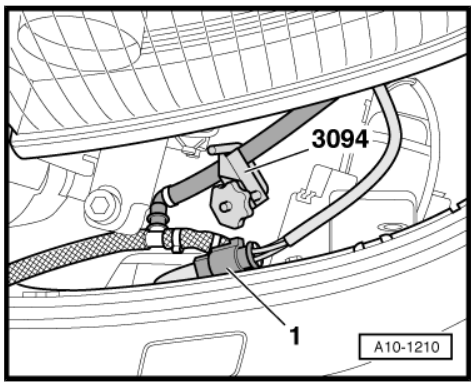

– Unscrew trim on both sides of the vehicle -arrow- and pull off forwards.

– Remove both headlights and detach the electrical connector on the reverse side.

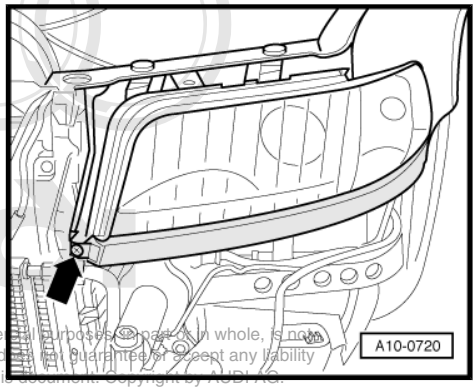

Protected by copyright. Copying for private or commercial purposes, in part or in whole, is not permitted unless authorised by AUDI AG. AUDI AG does not guarantee or accept any liability with respect to the correctness of information in this document. Copyright by AUDI AG.

– Unclip cover -1- for air duct (left-side) on lock carrier in engine compartment.

– Remove air duct -2-.

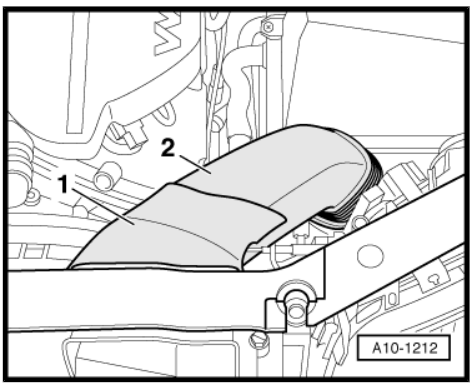

– Unbolt ATF line from top of radiator -arrow-.

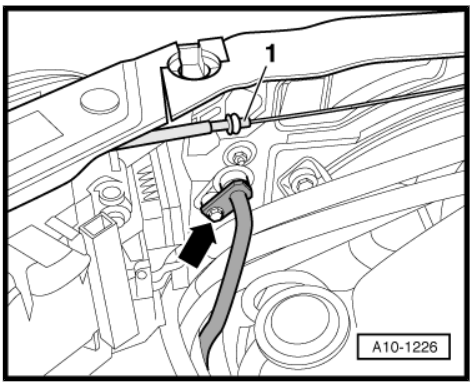

Note

- *Note the rules for cleanliness when working on the automatic gearbox ⇒ Automatic gearbox 01L, four-wheel drive; Rep. Gr. 37 .*
- *Secure the ATF lines facing upwards on the engine to prevent fluid leaking out.*

– Unclip cover -1- for air duct (right-side) on lock carrier in engine compartment.

– Remove air duct -2-.

– Detach hose at combination valve for secondary air on right side of vehicle.

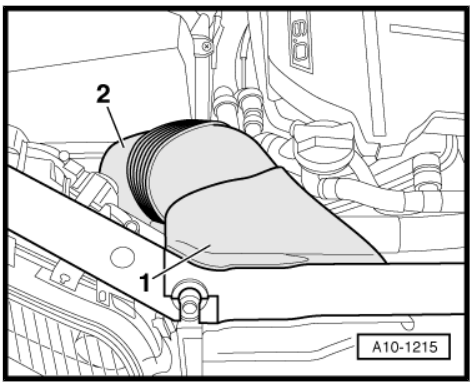

– Detach coolant hose (right-side) at engine -arrow-.

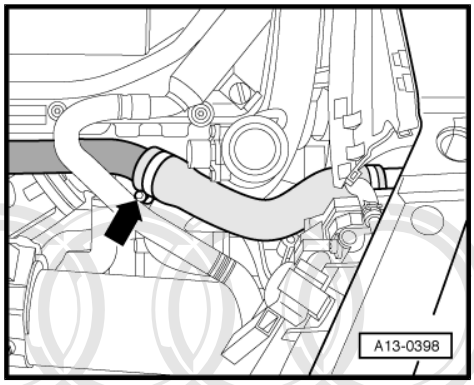

– Unplug electrical connectors -arrows-.

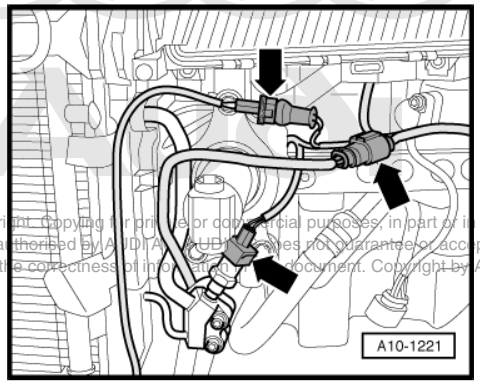

Protected by copyright. Copying for private or commercial purposes, in part or in whole, is not permitted unless authorised by AUDI AG. AUDI AG does not guarantee or accept any liability with respect to the correctness of information in this document. Copyright by AUDI AG.

– To mark the installation position, make a coloured mark on body longitudinal members in the holes on left and right -arrow- in the lock carrier.
– Remove impact damper (left and right) by unscrewing bolts -1 ... 3-.

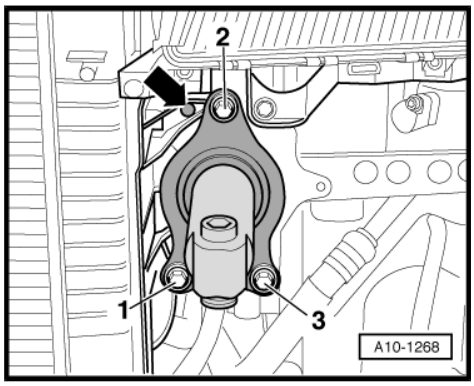

– Remove bolts from front-end service sleeves -3369- .
– Screw the bolts from front-end service sleeves -3369- into the top bolt holes for impact damper.

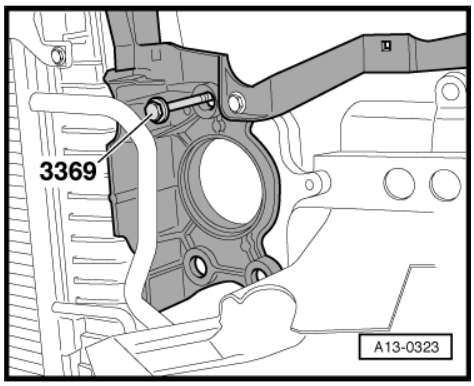

– Remove cover over bolt on both wing panels and unscrew bolt -arrow-.
– Carefully pull the lock carrier forward.

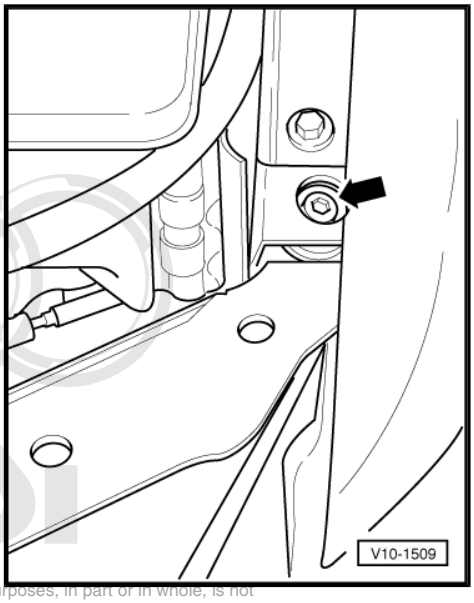

Protected by copyright. Copying for private or commercial purposes, in part or in whole, is not permitted unless authorised by AUDI AG. AUDI AG does not guarantee or accept any liability with respect to the correctness of information in this document. Copyright by AUDI AG.

1.1.2 Installing

Installation is carried out in the reverse order; note the following:

– Install lock carrier with attachments ⇒ General body repairs, exterior; Rep. Gr. 50 .
– Install headlights ⇒ Electrical system; Rep. Gr. 94
– Install front bumper ⇒ General body repairs, exterior; Rep. Gr. 63 .
– Fill cooling system ⇒ page 152 .
– Check ATF fluid level ⇒ Automatic gearbox 01L, four-wheel drive; Rep. Gr. 37
– Check headlight adjustment ⇒ Electrical system; Rep. Gr. 94 .

2 Servicing work on pulley end

2.1 Poly V-belt drive for power steering pump, alternator and air conditioner - exploded view of components

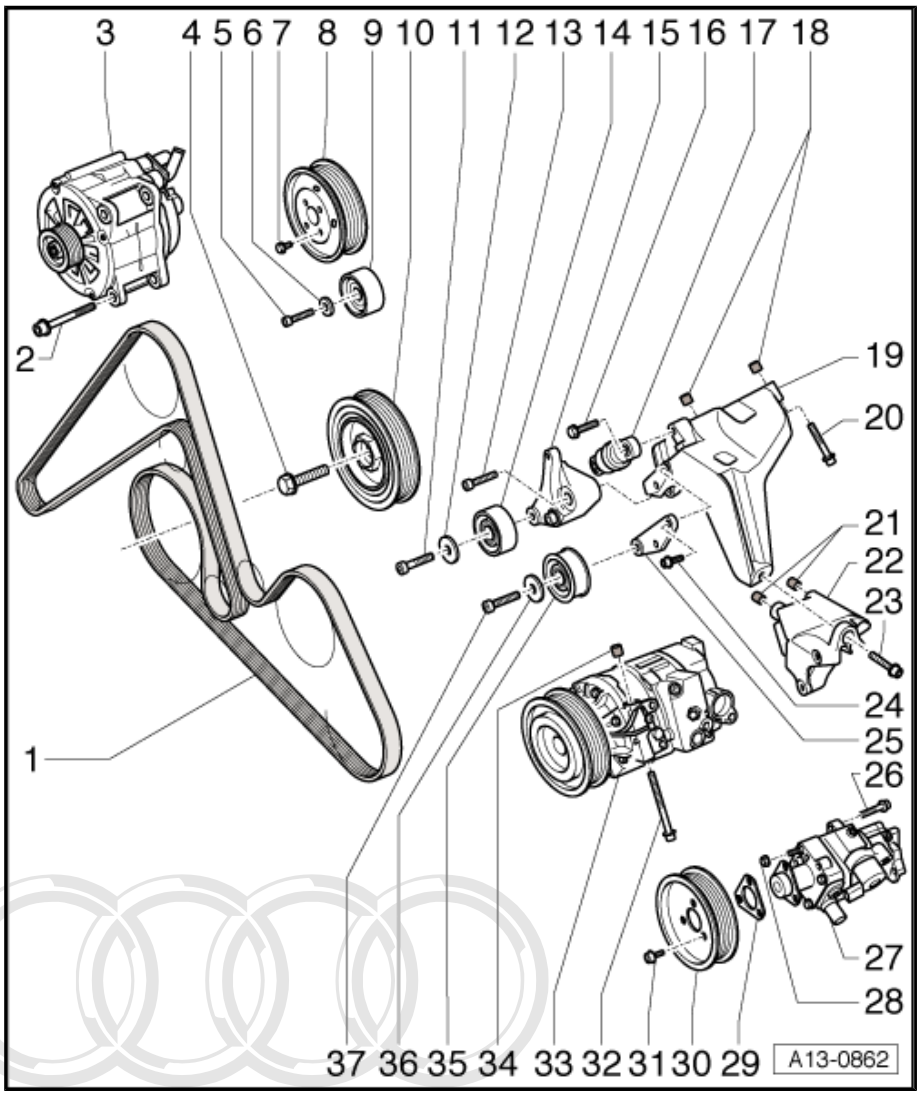

1 - Poly V-belt

- ❑ Before removing, mark direction of rotation with chalk or felt-tipped pen. If the belt runs in the opposite direction when it is refitted, this can cause breakage.
- ❑ Removing and installing ⇒ page 50
- ❑ Check for wear

2 - 20 Nm

3 - Alternator

- ❑ Removing and installing ⇒ Electrical system; Rep. Gr. 27

4 - 100 Nm + 90° (1/4 turn) further

- ❑ Renew
- ❑ Use counterhold - T10069- to loosen and tighten

5 - 20 Nm

6 - Washer

7 - 9 Nm

8 - Pulley for coolant pump

9 - Idler roller (top) for poly V-belt

10 - Vibration damper

- ❑ With pulley for poly V-belt
- ❑ Removing and installing ⇒ page 52

11 - 20 Nm

12 - Washer

13 - 20 Nm

14 - Tensioning roller for poly V-belt

15 - Lever for tensioning roller

16 - 20 Nm

17 - Tensioning spring

- ❑ With hydraulic damper

18 - Dowel sleeve

- ❑ 2 x
- ❑ Check for correct seating in bracket

Copyright. Copying for private or commercial purposes, in part or in whole, is not permitted unless authorised by AUDI AG. AUDI AG does not guarantee or accept any liability with respect to the correctness of information in this document. Copyright by AUDI AG.

19 - Bracket

- ❑ for AC compressor and tensioner
- ❑ The bracket for AC compressor and tensioner is paired with the bracket for idler roller ⇒ Air conditioning system; Rep. Gr. 87
- ❑ When installing check dowel sleeves ⇒ Item 18 (page 48)
- ❑ After replacing, check alignment of pulleys on power steering pump and air conditioner compressor ⇒ page 50

20 - 40 Nm

21 - Dowel sleeve

- ❑ 2 x

22 - Bracket for power steering pump

- ❑ When installing check dowel sleeves ⇒ Item 21 (page 49)
- ❑ After replacing, check alignment of pulleys on power steering pump and air conditioner compressor ⇒ page 50

23 - M8 -20 Nm-; M10 -40 Nm-

24 - 20 Nm

25 - Bracket for idler roller

- ❑ The bracket for AC compressor and tensioner is paired with the bracket for idler roller ⇒ Air conditioning system; Rep. Gr. 87

26 - 20 Nm

27 - Power steering pump

- ❑ Removing and installing ⇒ Running gear, front-wheel drive and four-wheel drive; Rep. Gr. 48
- ❑ After replacing, check alignment of pulleys on power steering pump and air conditioner compressor ⇒ page 50

28 - 20 Nm

29 - Shim

- ❑ Different thicknesses
- ❑ Check alignment of pulleys on power steering pump and air conditioner compressor after renewing power steering pump, air conditioner compressor, bracket for power steering pump or bracket for air conditioner compressor ⇒ page 50

30 - Pulley for power steering pump

31 - 20 Nm

32 - 25 Nm

33 - Air conditioner compressor

- ❑ When installing check dowel sleeves ⇒ Item 34 (page 49)

34 - Dowel sleeves

- ❑ 2 x

Protected by copyright. Copying for private or commercial purposes, in part or in whole, is not permitted unless authorised by AUDI AG. AUDI AG does not guarantee or accept any liability with respect to the correctness of information in this document. Copyright by AUDI AG.

35 - Idler roller (bottom) for poly V-belt

36 - Washer

37 - 20 Nm

2.2 Removing and installing poly V-belt

2.2.1 Removing

– Pull lock carrier forwards ⇒ page 42 .

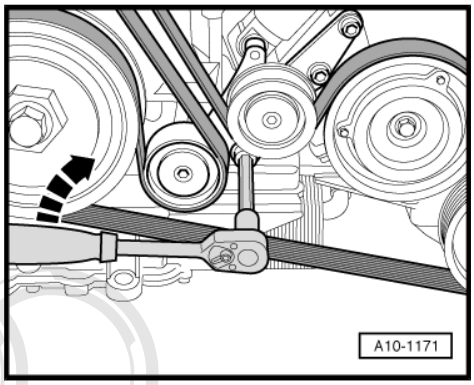

Note

Before removing, mark direction of rotation of poly V-belt with chalk or felt-tipped pen. If the belt runs in the opposite direction when it is refitted, this can cause breakage.

– To slacken the poly V-belt turn the tensioner in the direction of the arrow.

– Remove poly V-belt and release tensioner.

2.2.2 Installing

Installation is carried out in the reverse order; note the following:

– Fit poly V-belt onto alternator pulley first and then onto other pulleys and finally onto the tensioning roller.

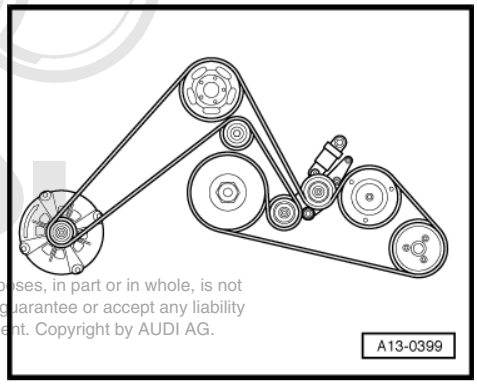

Note

When installing poly V-belt, make sure it is properly seated on pulleys.

Protected by copyright. Copying for private or commercial purposes, in part or in whole, is not permitted unless authorised by AUDI AG. AUDI AG does not guarantee or accept any liability with respect to the correctness of information in this document. Copyright by AUDI AG.

– After renewing any the following components, it is necessary to check the alignment of the pulleys for power steering pump and air conditioner compressor ⇒ page 50 .

- Power steering pump
- Bracket for power steering pump
- Air conditioner compressor
- Bracket for air conditioner compressor

– Install lock carrier ⇒ page 47 .

– Start engine and check that belt runs properly.

2.3 Checking alignment of pulleys for power steering pump and air conditioner compressor

Note

To prevent damage to the poly V-belt, check the alignment of the pulleys for air conditioner compressor and power steering pump.

After renewing any the following components, it is necessary to check the alignment of the pulleys.

- Power steering pump
- Bracket for power steering pump
- Air conditioner compressor

- Bracket for air conditioner compressor

Special tools and workshop equipment required

- Alignment gauge -3201-

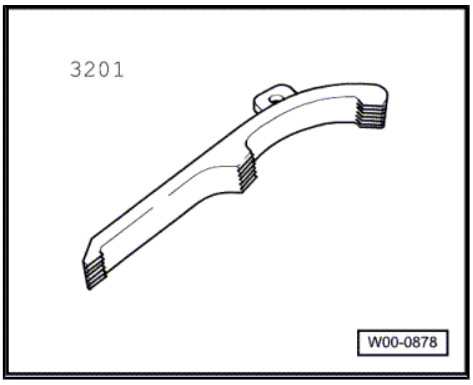

2.3.1 Test sequence

- Poly V-belt removed.

– Place alignment gauge -3201- onto poly V-belt pulley of the power steering pump.

– Push pulley of power steering pump towards housing to eliminate any possible influence due to axial play.

Protected by copyright. Copying for private or commercial purposes, in part or in whole, is not permitted unless authorized by AUDI AG. AUDI AG does not guarantee or assume any liability with respect to the correctness of information in this document. Copyright by AUDI AG.

- The poly V-belt pulley of the power steering pump must align with the poly V-belt pulley of the air conditioner compressor.

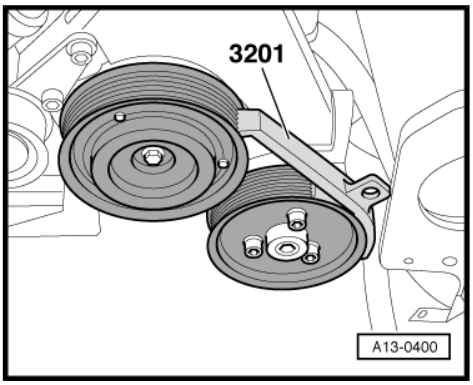

If the two poly V-belt pulleys are not aligned:

– Unscrew bolts -arrows- at pulley for power steering pump.

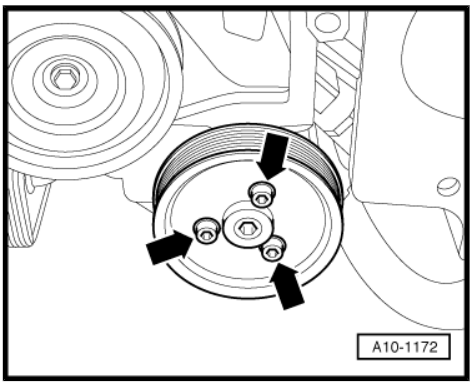

Note

Installation position: the word “vorne” (front) on the poly V-belt pulley faces the direction of travel.

– Use shims -3- of thicknesses 0.5, 1.0 and 1.5 mm to equalise the distance on pulley for power steering pump -2- in relation to pulley for air conditioner compressor. Part No.: ⇒ Parts catalogue .

– Tighten bolts -1-.

– Then check alignment of the pulleys using alignment gauge -3201- . Repeat adjustment if necessary.

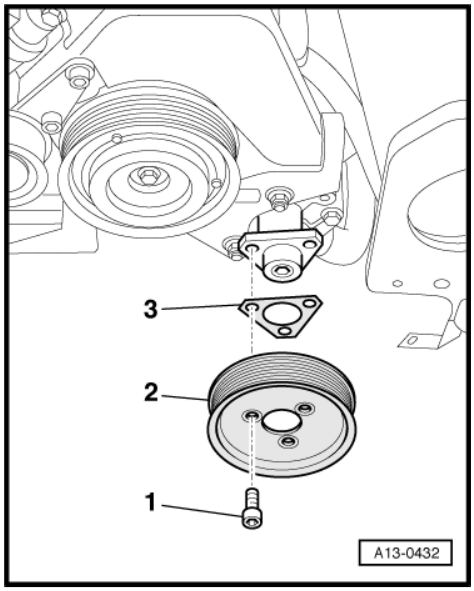

2.3.2 Tightening torque

Component	Nm
Pulley to power steering pump	22

2.4 Removing and installing vibration damper

Special tools and workshop equipment required

♦ Counterhold -T10069-

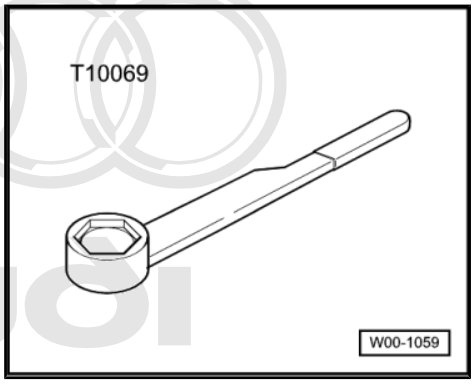

Protected by copyright. Copying for private or commercial purposes, in part or in whole, is not permitted unless authorised by AUDI AG. AUDI AG does not guarantee or accept any liability with respect to the correctness of information in this document. Copyright by AUDI AG.

2.4.1 Removing

– Pull lock carrier forwards ⇒ page 42 .

Note

Before removing, mark direction of rotation of poly V-belt with chalk or felt-tipped pen. If the belt runs in the opposite direction when it is refitted, this can cause breakage.

– To slacken the poly V-belt, turn the tensioner in the direction of the -arrow-.

– Remove poly V-belt.

– Release pressure from the tensioner.

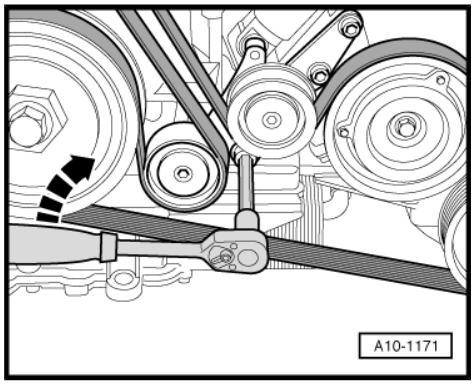

– Loosen the central bolt -1- for vibration damper; to do so, use counterhold -T10069- to lock vibration damper.
– Remove vibration damper.

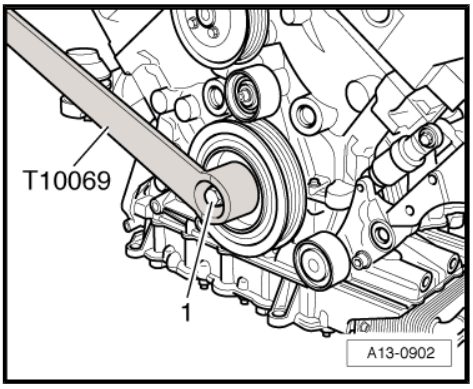

2.4.2 Installing

Installation is carried out in the reverse order; note the following:

– Use a new central bolt for securing.

Note

- *The contact surfaces between vibration damper and crankshaft must be free of oil.*
- *Do not additionally lubricate the central bolt for vibration damper.*

– Install poly V-belt ⇒ page 50 .
– Install lock carrier ⇒ page 47 .

2.4.3 Tightening torque

Component	Nm
Vibration damper to crankshaft	100 + 90° 8) 9)

8) Renew bolt.

9) 90° equals a quarter of a turn.

Protected by copyright. Copying for private or commercial purposes, in part or in whole, is not permitted unless authorised by AUDI AG. AUDI AG does not guarantee or accept any liability with respect to the correctness of information in this document. Copyright by AUDI AG.

2.5 Renewing crankshaft oil seal (pulley end)

Special tools and workshop equipment required

- Oil seal extractor lever -VW 681-
- Assembly tool -T10053-
- Counterhold -T10069-
- Assembly tool -T10124-

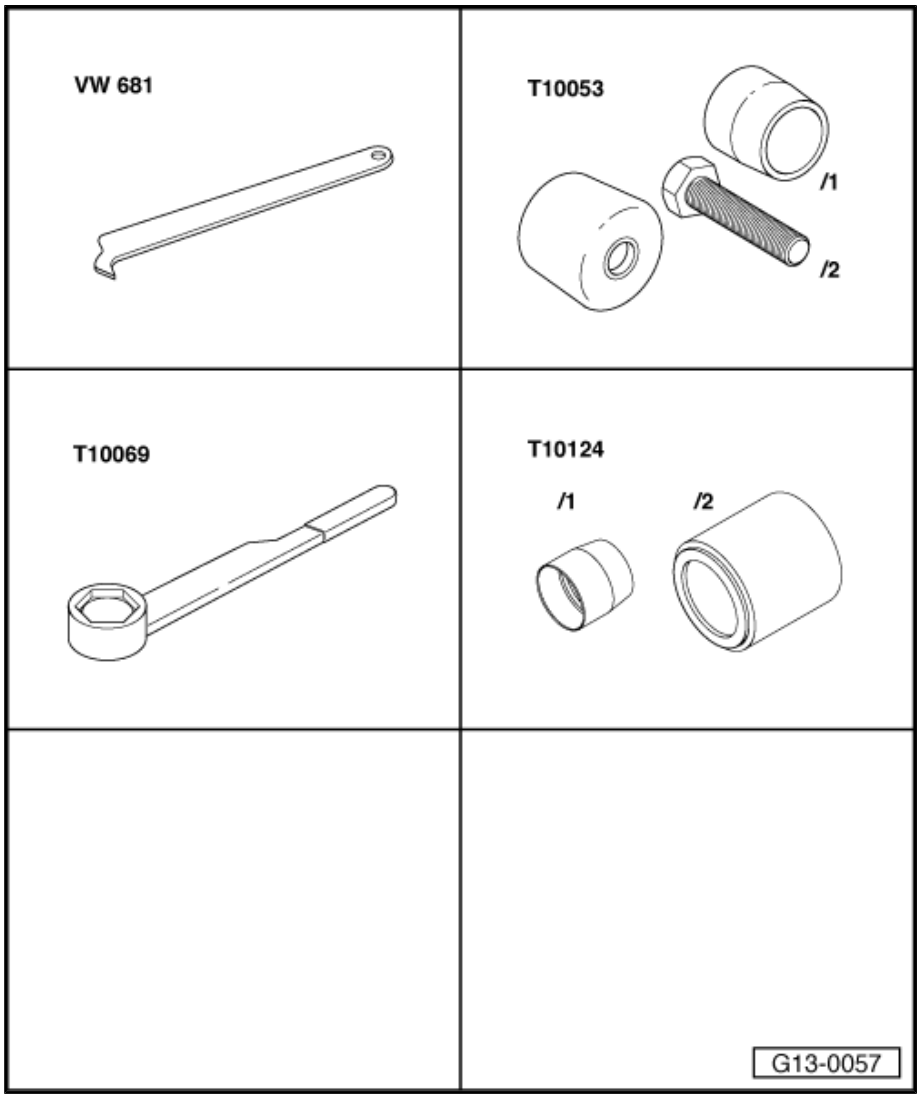

2.5.1 Removing

– Pull lock carrier forwards ⇒ page 42 .

Note

Before removing, mark direction of rotation of poly V-belt with chalk or felt-tipped pen. If the belt runs in the opposite direction when it is refitted, this can cause breakage.

– To slacken the poly V-belt turn the tensioner in the direction of the arrow.

– Remove poly V-belt and release tensioner.

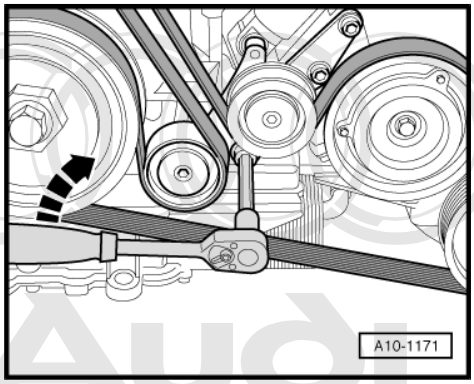

Protected by copyright. Copying for private or commercial purposes, in part or in whole, is not permitted unless authorised by AUDI AG. AUDI AG does not guarantee or accept any liability with respect to the correctness of information in this document. Copyright by AUDI AG.

– Loosen the central bolt -1- for vibration damper; to do so, use counterhold -T10069- to lock vibration damper.
– Remove vibration damper.

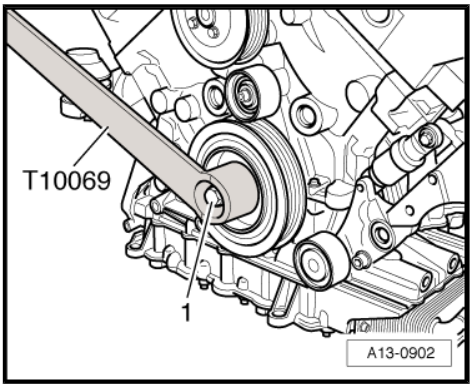

– Pry out the oil seal using the oil seal extractor lever -VW 681- .

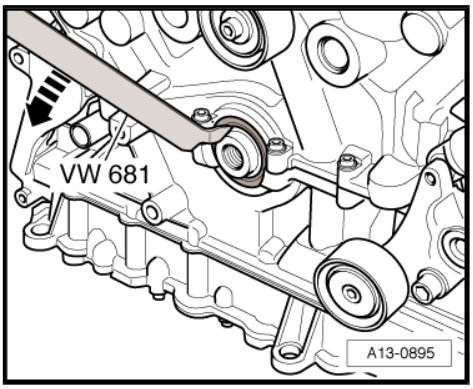

2.5.2 Installing

– Clean running surface and sealing surface.

Note

Do not lubricate sealing lip and external edge of oil seal before pressing in.

– Push on oil seal using fitting sleeve -T10124/1- .

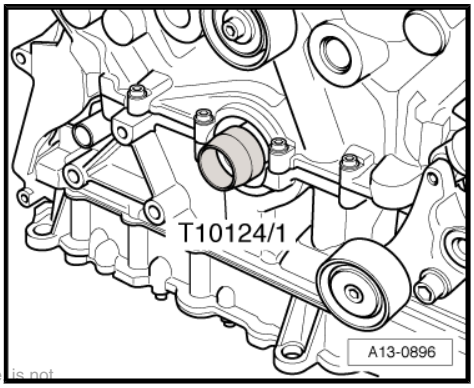

Protected by copyright. Copying for private or commercial purposes, in part or in whole, is not permitted unless authorised by AUDI AG. AUDI AG does not guarantee or accept any liability with respect to the correctness of information. Copyright by AUDI AG.

– Press oil seal on as far as the stop using fitting sleeve -T10124/2- and bolt -T10053/2- .
– Install vibration damper ⇒ page 53 .
– Install poly V-belt ⇒ page 50 .
– Install lock carrier ⇒ page 47 .

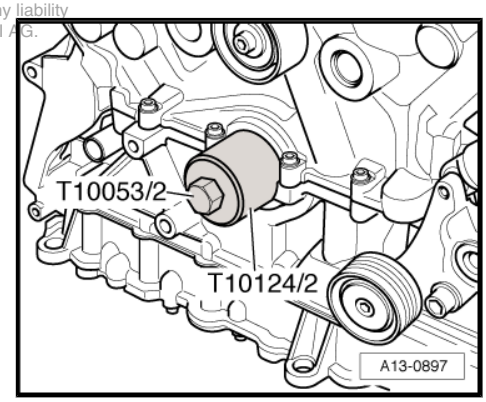

3 Servicing work on timing chain end

3.1 Removing and installing drive plate

Special tools and workshop equipment required

♦ Counterhold - T10069-

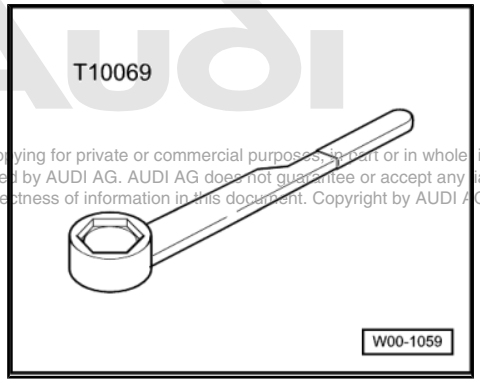

Protected by copyright. Copying for private or commercial purposes, in part or in whole, is not permitted unless authorised by AUDI AG. AUDI AG does not guarantee or accept any liability with respect to the correctness of information in this document. Copyright by AUDI AG.

3.1.1 Removing

- Engine removed.
- Engine separated from gearbox.

– Counterhold crankshaft using the counterhold tool -T10069- at the vibration damper.

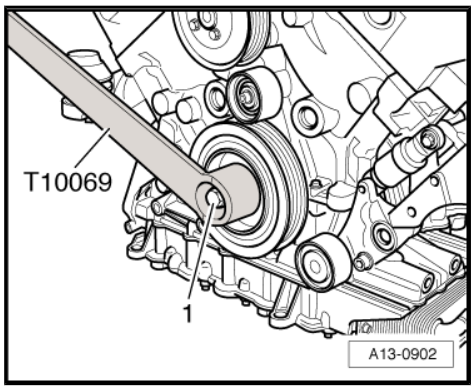

Note

Ignore item marked -1-.

– Unbolt drive plate -arrow-.

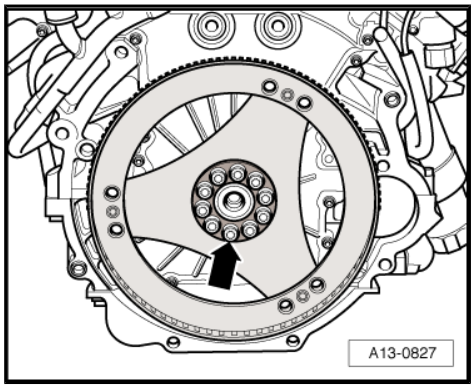

3.1.2 Installing

Installation is carried out in the reverse order; note the following:

– Install the drive plate using the following:

1 - Shim: thickness 2.0 mm

2 - Washer: thickness 1.5 mm

– Use new bolts for securing.

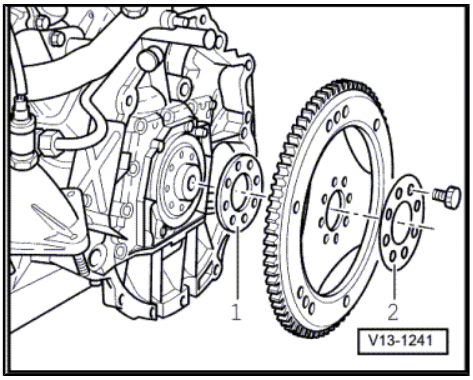

3.1.3 Tightening torque

Component	Nm
Drive plate to crankshaft	30 + 90°[10) 11)]

10) Renew bolts.

11) 90° equals a quarter of a turn.

3.2 Renewing crankshaft oil seal (on timing chain end)

Special tools and workshop equipment required

- Extractor hook -10-221-
- Fitting tool -2003-

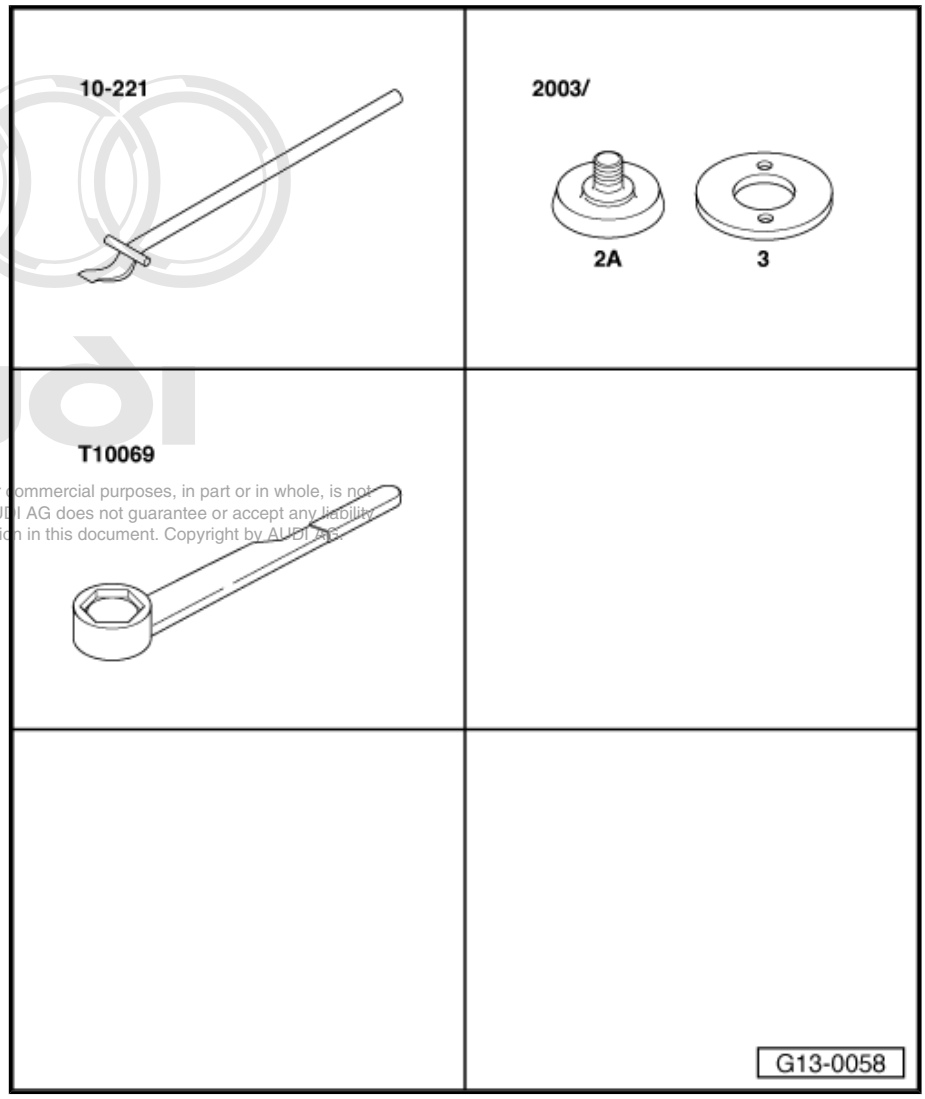

Protected by copyright. Copying for private or commercial purposes, in part or in whole, is not permitted unless authorised by AUDI AG. AUDI AG does not guarantee or accept any liability with respect to the correctness of information in this document. Copyright by AUDI AG.

♦ Counterhold -T10069-

3.2.1 Removing

- Engine removed.
- Engine separated from gearbox.

– Counterhold crankshaft using the counterhold tool -T10069- at the vibration damper.

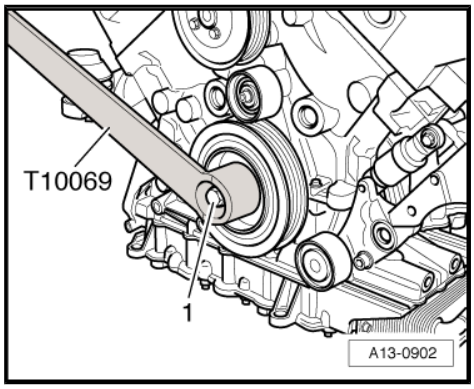

Note

Ignore item marked -1-.

– Unbolt drive plate -arrow-.

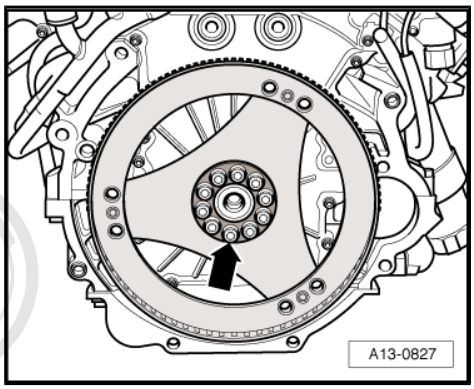

– Pry out the oil seal using the extractor hook -10-221- -arrow-.

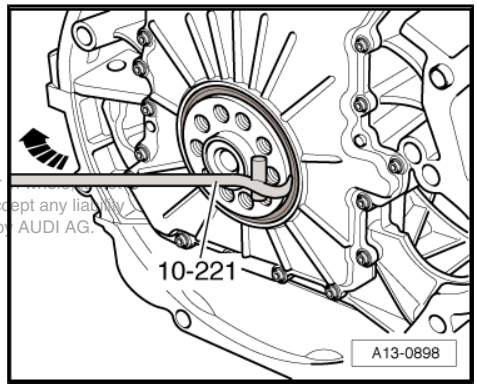

Protected by copyright. Copying for private or commercial purposes, in part or whole, is not permitted unless authorised by AUDI AG. AUDI AG does not guarantee or accept any liability with respect to the correctness of information in this document. Copyright by AUDI AG.

3.2.2 Installing

– Clean running surface and sealing surface.

– Push oil seal onto crankshaft using fitting sleeve -2003/2 A- .

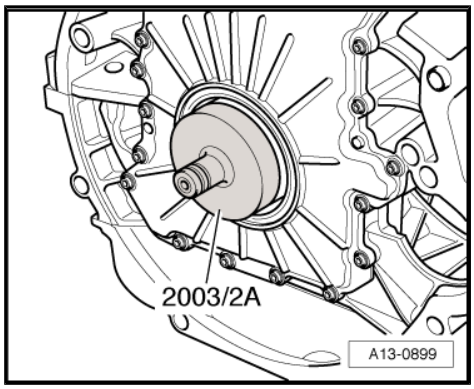

– Press in oil seal as far as the stop using fitting ring -2003/3- and bolts -1- and -2- for drive plate.

– Install drive plate ⇒ page 56 .

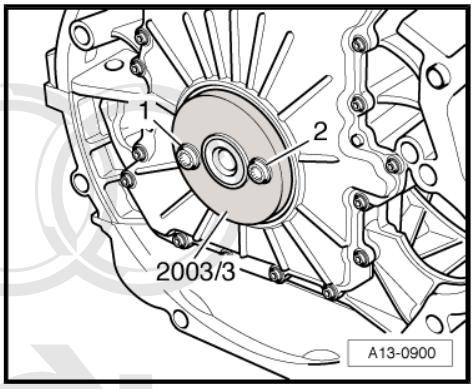

3.3 Timing chain covers - exploded view of components

Protected by copyright. Copying for private or commercial purposes, in part or in whole, is not permitted unless authorized by AUDI AG. AUDI AG does not guarantee or accept any liability with respect to the correctness of information in this document. Copyright by AUDI AG.

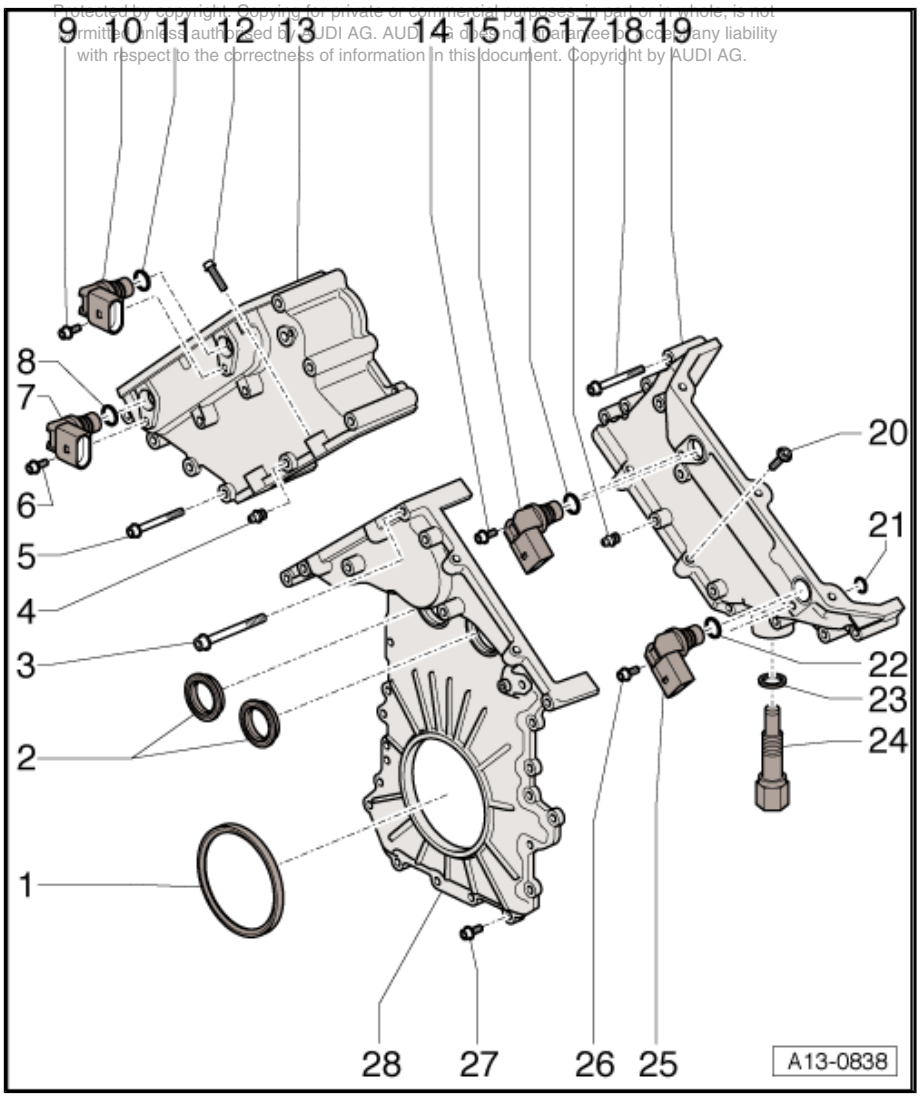

1 - Crankshaft oil seal (on timing chain end)

- ❑ Renew
- ❑ Removing and installing ⇒ page 57

2 - Seals

- ❑ Renew
- ❑ Removing and installing ⇒ page 60

3 - 20 Nm

4 - Threaded nipple -10 Nm-

- ❑ After removing, replace timing chain covers (with threaded nipple) with new version (without threaded nipple).

5 - 9 Nm

- ❑ Observe the tightening sequence ⇒ page 67

6 - 9 Nm

- ❑ Install using locking fluid; locking fluid ⇒ Parts List

7 - Hall sender 4 -G301-

- ❑ For exhaust camshaft, cylinder bank 2 (left-side)

8 - O-ring

- ❑ Renew

9 - 9 Nm

- ❑ Install using locking fluid; locking fluid ⇒ Parts List

10 - Hall sender 2 -G163-

- ❑ For inlet camshaft, cylinder bank 2 (left-side)

11 - O-ring

- ❑ Renew

12 - 9 Nm

- ❑ Observe the tightening sequence ⇒ page 67

13 - Timing chain cover (left-side)

- ❑ After removing, replace timing chain cover (with threaded nipple) with new version (without threaded nipple).

14 - 9 Nm

- ❑ Install using locking fluid; locking fluid ⇒ Parts List

15 - Hall sender -G40-

- ❑ For inlet camshaft, cylinder bank 1 (right-side)

16 - O-ring

- ❑ Renew

17 - Threaded nipple -10 Nm-

- ❑ After removing, replace timing chain cover (with threaded nipple) with new version (without threaded nipple).

18 - 9 Nm

- ❑ Observe the tightening sequence ⇒ page 68

19 - Timing chain cover (right-side)

- ❑ When assembling, replace timing chain cover (with threaded nipple) with new version (without threaded nipple).

20 - 9 Nm

- ❑ Observe the tightening sequence ⇒ page 68

21 - O-ring

- ❑ Renew
- ❑ Insert into timing chain cover ⇒ Item 19 (page 60)

22 - O-ring

- ❑ Renew

23 - Seal

24 - Chain tensioner for timing chain (right-side)

- ❑ Tighten to 60 Nm

25 - Hall sender 3 -G300-

- ❑ For exhaust camshaft, cylinder bank 1 (right-side)

26 - 9 Nm

- ❑ Install using locking fluid; locking fluid ⇒ Parts List

27 - 9 Nm

28 - Timing chain cover (bottom)

3.4 Renewing seals for studs

Protected by copyright. Copying for private or commercial purposes, in part or in whole, is not permitted unless authorised by AUDI AG. AUDI AG does not guarantee or accept any liability with respect to the correctness of information in this document. Copyright by AUDI AG.

3.4.1 Removing

- Engine removed.
- Engine separated from gearbox.

– Use screwdriver to pry out seals -1-.

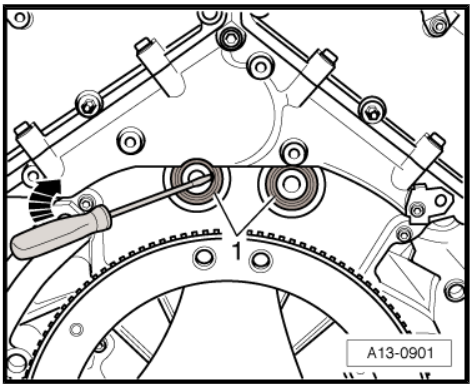

Protected by copyright. Copying for private or commercial purposes, in part or in whole, is not permitted unless authorised by AUDI AG. AUDI AG does not guarantee or accept any liability with respect to the correctness of information in this document. Copyright by AUDI AG.

3.4.2 Installing

– Clean sealing surfaces; they must be clean and free of grease.

– Press in the new seals as far as the stop using a 24 mm socket.

3.5 Removing and installing timing chain covers

Special tools and workshop equipment required

♦ Adhesive sealant ⇒ Parts catalogue

♦ Electric drill with plastic brush attachment

♦ Safety goggles

Caution

The engine must not be turned when the timing chain cover (top right) is removed. The installed chain tensioner (right-side) and timing chain cover (top right) are what prevent the timing chain from slipping.

3.5.1 Removing

- Engine removed.
- Engine separated from gearbox.

Note

All cable ties which are released or cut open when removing must be fitted in the same position when installing.

– Remove drive plate ⇒ page 56 .

– Remove top section of intake manifold ⇒ page 92 .

– Remove bottom section of intake manifold ⇒ page 99 .

– Remove cylinder head covers ⇒ page 88 .

– Disconnect the electrical connectors at solenoid valves for activated charcoal filter system.

– Detach electrical connector -2-.
– Disconnect vacuum hoses -1-, -3- and -4-.
– Remove fuel rail together with the solenoid valves for activated charcoal filter system and place down on a clean surface.

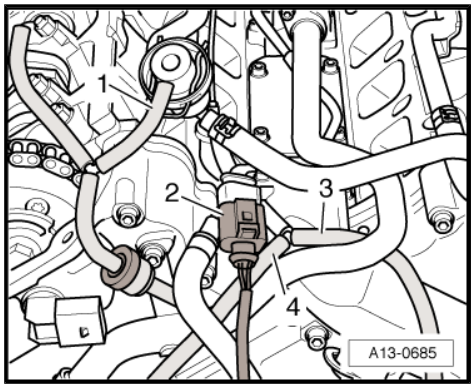

Note

Plug the holes for the fuel injectors in cylinder head with suitable plugs.

– Detach electrical connectors -3- and -4- for knock sensors on both cylinder banks from bracket and unplug.

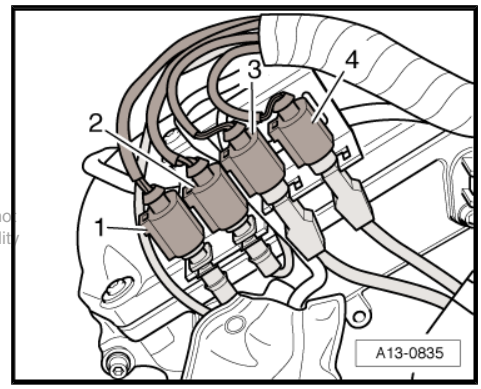

Protected by copyright. Copying for private or commercial purposes, in part or in whole, is not permitted unless authorised by AUDI AG. AUDI AG does not guarantee or accept any liability with respect to the correctness of information in this document. Copyright by AUDI AG.

– Pull back the heat insulation sleeves on Hall senders for exhaust camshaft on both cylinder heads.
– Unplug the electrical connectors at Hall senders for exhaust camshaft -arrow- and inlet camshaft on both cylinder heads.

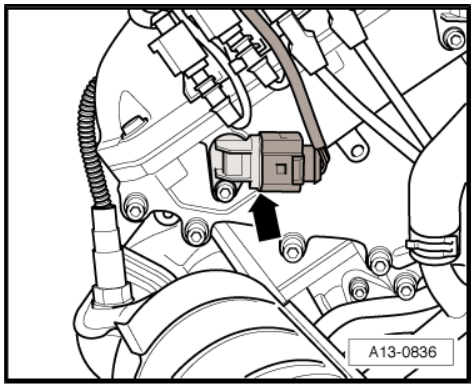

– Unplug electrical connector at oil pressure switch -F1- -arrow- and move electrical wire clear.

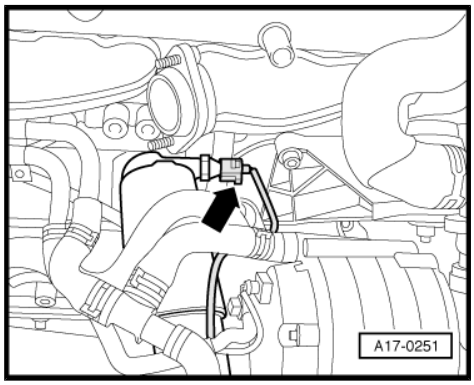

– Unplug electrical connector -1- at coolant temperature sender.
– Disconnect earth cable -2-.
– Unbolt clamp -3- and remove wiring harness from engine.

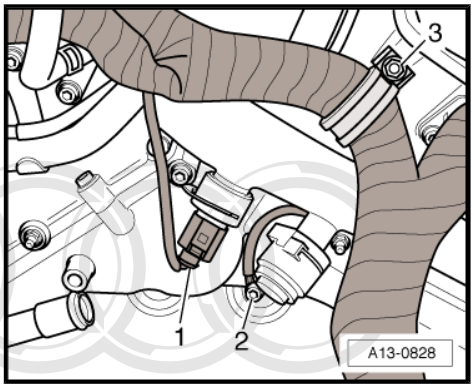

– Unscrew bolts -1- and -2- and detach coolant hose -arrow-.
– Pull off coolant pipe from thermostat housing towards rear.

Protected by copyright. Copying for private or commercial purposes, in part or in whole, is not permitted unless authorised by AUDI AG. AUDI AG does not guarantee or assume any liability with respect to the correctness of information in this document. Copyright by AUDI AG.

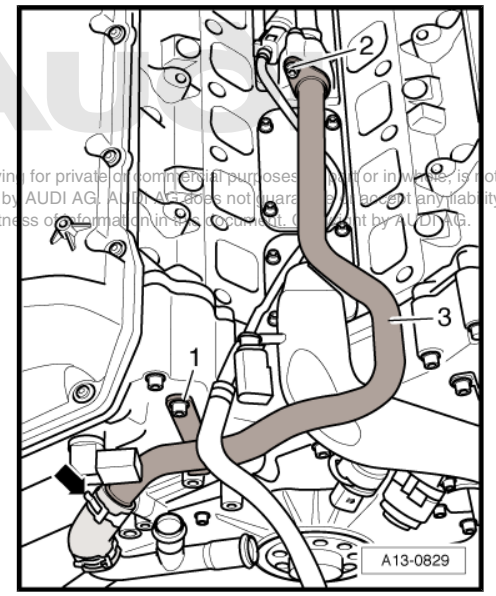

– Disconnect coolant hose -3-.
– Unscrew bolt -1-.

Note

Ignore item marked -2-.

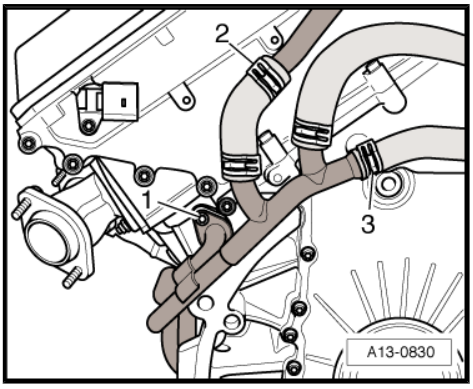

– Disconnect coolant hoses -arrows-.
– Unscrew bolt -1- and remove coolant pipe (left-side).

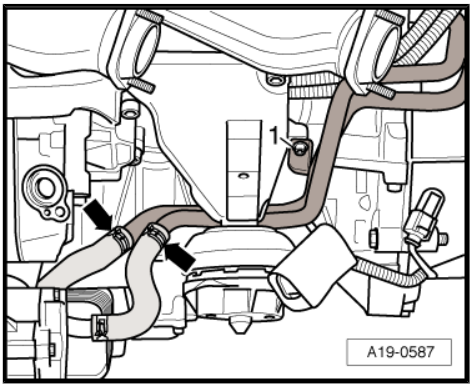

– Move electrical connector -2- clear.

– Unscrew bolts -3- and -4- and remove coolant pipes -1- and -5-.

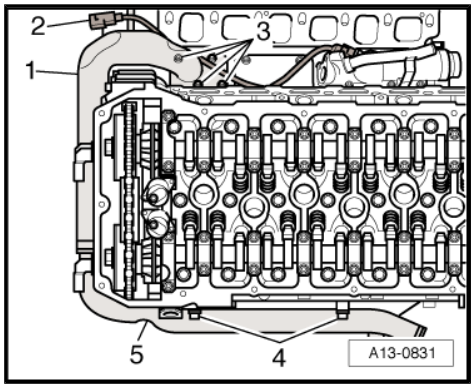

– Detach coolant hoses -3- and -4-.

– Unscrew bolt -2- and remove coolant pipe (bottom right).

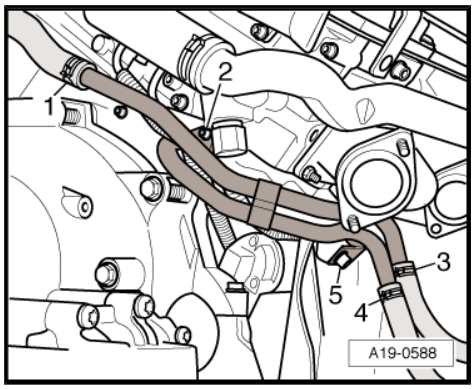

Note

Ignore items marked -1- and -5-.

– Unscrew bolts -1 ... 3- and remove timing chain cover (left-side).

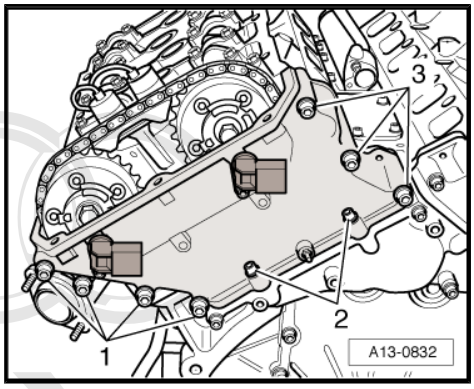

– Unscrew chain tensioner -arrow- for camshaft timing chain.

– Unscrew bolts -1 ... 4- and remove timing chain cover (right-side).

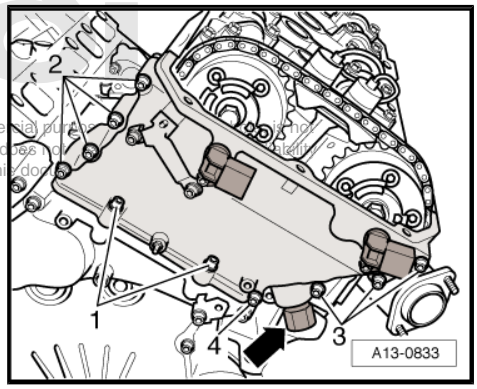

Protected by copyright. Copying for private or commercial purposes, in part or in whole, is not permitted unless authorised by AUDI AG. AUDI AG does not guarantee or assume any liability with respect to the correctness of information in this document.

– Unscrew bolts -1 ... 6- and remove timing chain cover (bottom).
– Press out crankshaft oil seal (timing chain end) from the timing chain cover (bottom).

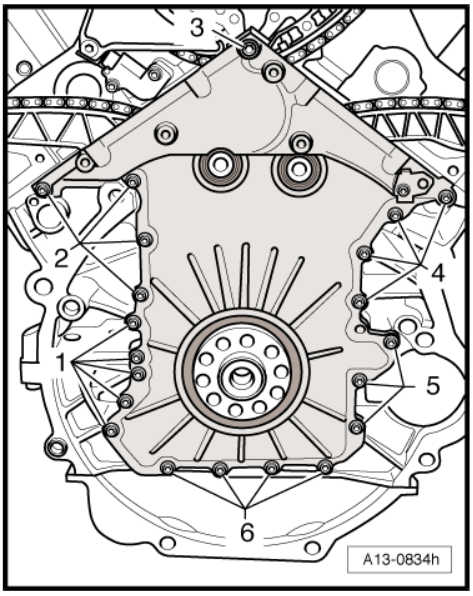

– Use screwdriver to pry out seals -1- for studs.

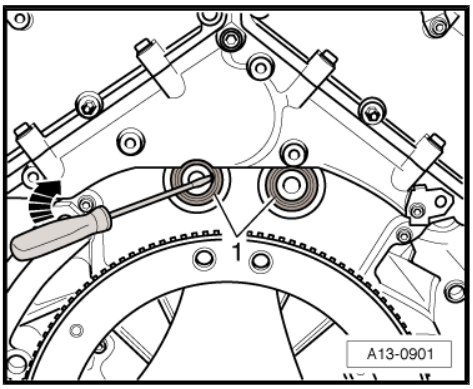

3.5.2 Installing

Installation is carried out in the reverse order; note the following:

Note

- *After removing, replace timing chain covers (with threaded nipple) with new version (without threaded nipple).*
- *Renew gaskets, seals and O-rings.*
- *Reinstall heat insulation sleeves in the same locations when assembling.*
- *Reinstall all cable ties in the same locations when assembling.*

Protected by copyright. Copying for private or commercial purposes, in part or in whole, is not permitted unless authorised by AUDI AG. AUDI AG does not guarantee or accept any liability with respect to the correctness of information in this document. Copyright by AUDI AG.

– Remove remaining sealant on timing chain covers and cylinder block / cylinder head using rotating plastic brush or similar.

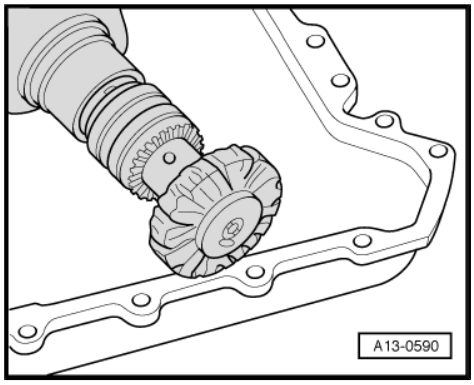

WARNING

Wear safety goggles.

– Clean sealing surfaces; they must be free of oil and grease.

Note

The timing chain covers must be installed within 15 minutes after applying sealant.

– Cut off tube nozzle at front marking (nozzle approx. 2 mm ∅).

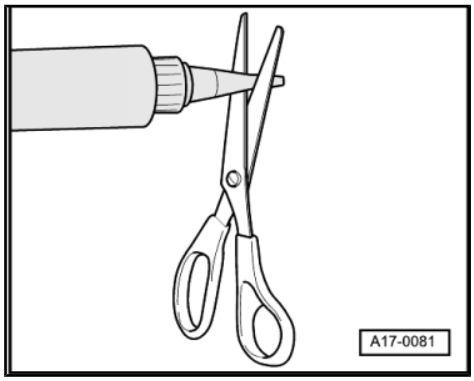

– Apply the bead of sealant onto the clean sealing surface of the timing chain cover (bottom) as illustrated -arrows-.

• Thickness of sealant bead: 1.5 ... 2.0 mm

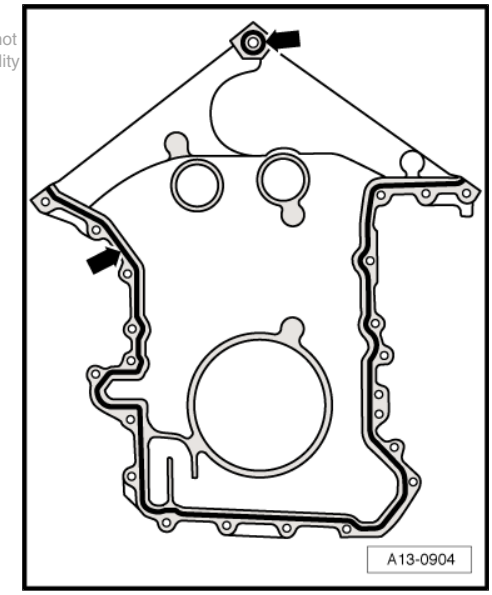

Protected by copyright. Copying for private or commercial purposes, in part or in whole, is not permitted unless authorised by AUDI AG. AUDI AG does not guarantee or accept any liability with respect to the correctness of information in this document. Copyright by AUDI AG.

– Attach timing chain cover (bottom) and tighten bolts -1 ... 6- in stages in a diagonal sequence.

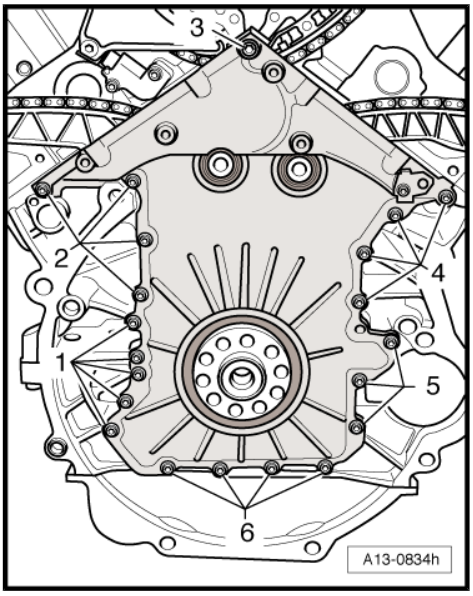

Protected by copyright. Copying for private or commercial purposes, in part or in whole, is not permitted unless authorised by AUDI AG. AUDI AG does not guarantee or accept any liability with respect to the correctness and completeness of this document. ©2004 AUDI AG.

– Apply a thin bead of sealant at the edges between the timing chain cover (bottom) and the timing chain covers (right and left) -arrows-.

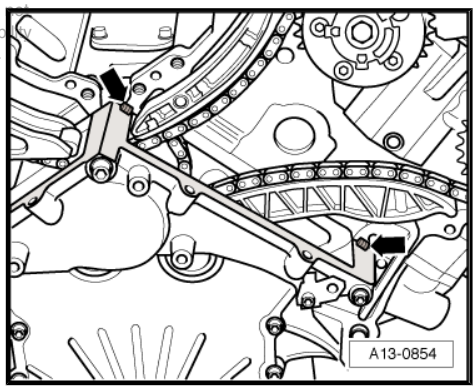

– Apply the bead of sealant onto the clean sealing surface of the timing chain covers (right and left) as illustrated -arrow-.

• Thickness of sealant bead: 1.5 ... 2.0 mm

– Insert the O-ring -1- in the timing chain cover (right-side).

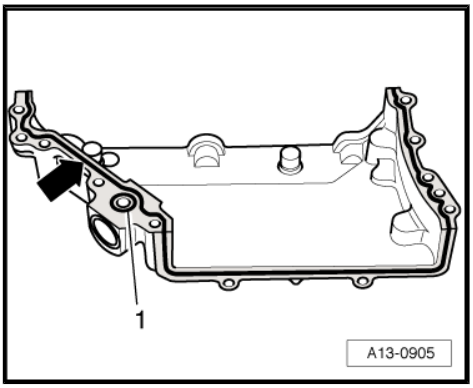

– Install timing chain cover (left-side) and tighten bolts in the following sequence:

1 - Tighten bolts -1- and -3- to 5 Nm.

2 - Tighten bolts -2- to 9 Nm.

3 - Tighten bolts -1- and -3- to 9 Nm.

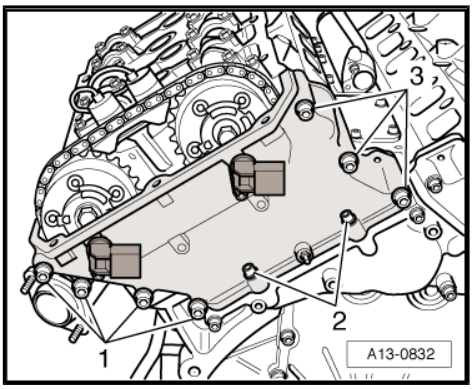

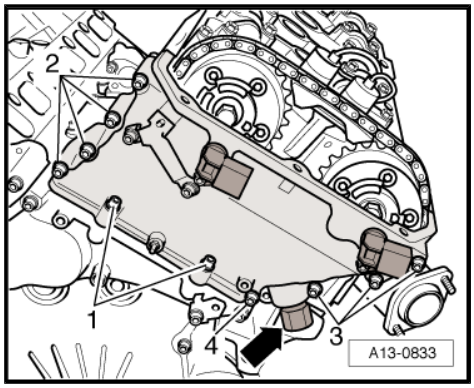

– Install timing chain cover (right-side) and tighten bolts in the following sequence:

1 - Tighten bolts -2-, -3- and -4- to 5 Nm.

2 - Tighten bolts -1- to 9 Nm.

3 - Tighten bolts -2-, -3- and -4- to 9 Nm.

– Secure chain tensioner -arrow- for camshaft timing chain using a new seal.

– Install crankshaft oil seal (timing chain side) ⇒ page 57 .

– Install the seals for studs ⇒ page 60 .

– Install cylinder head covers ⇒ page 88 .

> ⚠ **Caution**
>
> *Take note of the correct routing of the electrical wiring at engine ⇒ page 40 .*

– Install bottom section of intake manifold ⇒ page 99 .

– Install top section of intake manifold ⇒ page 96 .

– Install drive plate ⇒ page 56 .

3.5.3 Tightening torques

Component		Nm
Timing chain cover (bottom)	M 6	9
to cylinder block	M 8	20
Timing chain cover (left and right)		9
Chain tensioner for camshaft timing chain		60

Protected by copyright. Copying for private or commercial purposes, in part or in whole, is not permitted unless authorised by AUDI AG. AUDI AG does not guarantee or accept any liability with respect to the correctness of information in this document. Copyright by AUDI AG.

3.6 Removing and installing timing chains for camshaft drive

> ⚠ **Caution**
>
> *The crankshaft and camshafts may only be turned when the engine is completely assembled and only via the crankshaft. This means that the timing chain covers and the chain tensioner for camshaft timing chain (right-side) must be installed.*

Note

- *The locking pin -3242- is only used for locking the crankshaft at TDC. Use tool -T10069- to counterhold.*
- *The camshaft plate -T10068- is only used for locking the camshafts at TDC. Use an 32 mm open-end spanner to counterhold on flats of camshaft.*

3.7 Timing chains for camshaft drive - exploded view of components

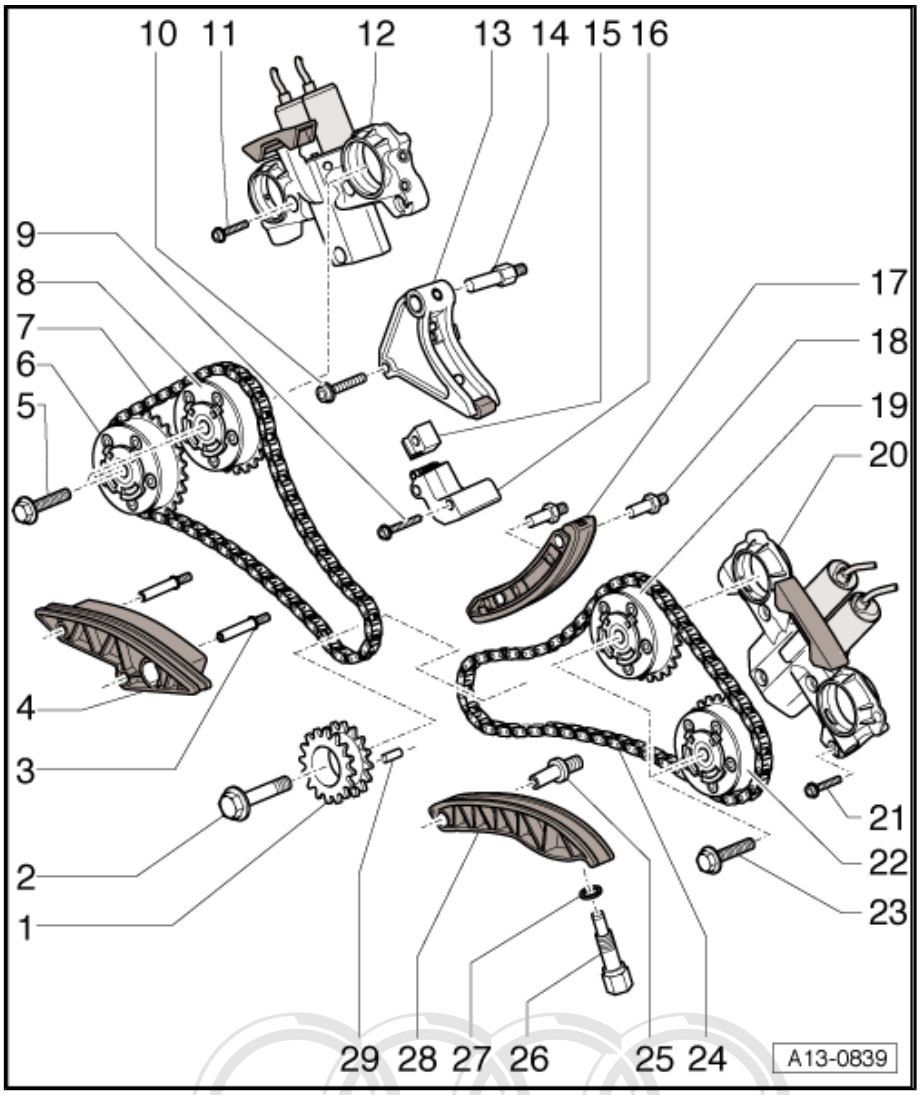

1 - Chain sprocket for camshaft drive

- ❑ Removing and installing; see Removing and installing drive chain ⇒ page 80

2 - 60 Nm + 90° (1/4 turn) further

- ❑ Renew
- ❑ To loosen and tighten use tool -T10069- to counterhold on vibration damper.

3 - Mounting pin -15 Nm-

- ❑ For guide rail ⇒ Item 4 (page 69)

4 - Guide rail

- ❑ For camshaft timing chain ⇒ Item 7 (page 69)

5 - 60 Nm + 90° (1/4 turn) further

- ❑ There must be no oil on the contact surfaces between camshaft adjuster and camshaft, as well as bolt head and camshaft adjuster.
- ❑ To loosen and tighten, counterhold with 32 mm open-end spanner on camshaft

6 - Camshaft adjuster (exhaust)

- ❑ For cylinder bank 2 (left-side)
- ❑ Identification: B2 / A9
- ❑ Removing and installing: refer to Removing and installing camshaft adjuster ⇒ page 108

7 - Camshaft timing chain

- ❑ For cylinder bank 2 (left-side)

8 - Camshaft adjuster (inlet)

- ❑ For cylinder bank 2 (left-side)
- ❑ Identification: B2 / A2
- ❑ Removing and installing: refer to Removing and installing camshaft adjuster ⇒ page 108

Protected by copyright. Copying for private or commercial purposes, in part or in whole, is not permitted unless authorised by AUDI AG. AUDI AG does not guarantee or accept any liability with respect to the correctness of information in this document. Copyright by AUDI AG.

9 - 9 Nm

10 - 20 Nm

11 - 9 Nm

- ❑ Install using locking fluid; locking fluid ⇒ Parts List

12 - Housing for camshaft control valves

- ❑ For cylinder bank 2 (left-side)
- ❑ Removing and installing: refer to Removing and installing camshaft adjuster ⇒ page 108

13 - Tensioning rail

- For camshaft timing chain ⇒ Item 7 (page 69)
- For cylinder bank 2 (left-side)

14 - Mounting pin -42 Nm-

- For tensioning rail ⇒ Item 13 (page 69)
- With hexagon flats

15 - Slide

- For chain tensioner ⇒ Item 16 (page 70)
- Installation position ⇒ page 71

16 - Chain tensioner

- For camshaft timing chain ⇒ Item 7 (page 69)
- Lock chain tensioner with drill bit (∅ 3.5 mm)

17 - Guide rail

- For camshaft timing chain ⇒ Item 24 (page 70)
- With hexagon flats

Protected by copyright. Copying for private or commercial purposes, in part or in whole, is not permitted unless authorised by AUDI AG. AUDI AG does not guarantee or accept any liability with respect to the correctness of information in this document. Copyright by AUDI AG.

18 - Mounting pin -15 Nm-

- For guide rail ⇒ Item 17 (page 70)

19 - Camshaft adjuster (inlet)

- For cylinder bank 1 (right-side)
- Identification: B1 / A2
- Removing and installing: refer to Removing and installing camshaft adjuster ⇒ page 108

20 - Housing for camshaft control valves

- For cylinder bank 1 (right-side)
- Removing and installing: refer to Removing and installing camshaft adjuster ⇒ page 108

21 - 9 Nm

- Install using locking fluid; locking fluid ⇒ Parts List

22 - Camshaft adjuster (exhaust)

- For cylinder bank 1 (right-side)
- Identification: B1 / A9
- Removing and installing: refer to Removing and installing camshaft adjuster ⇒ page 108

23 - 60 Nm + 90° ($^1/_4$ turn) further

- There must be no oil on the contact surfaces between camshaft adjuster and camshaft, as well as bolt head and camshaft adjuster.
- To loosen and tighten, counterhold with 32 mm open-end spanner on camshaft

24 - Camshaft timing chain

- For cylinder bank 1 (right-side)

25 - Mounting pin -25 Nm-

- For tensioning rail ⇒ Item 28 (page 70)
- With collar

26 - Chain tensioner

- For camshaft timing chain ⇒ Item 24 (page 70)
- Tighten to 60 Nm

27 - Seal

- Renew

28 - Tensioning rail

- For camshaft timing chain ⇒ Item 24 (page 70)

29 - Pin

Installation position for slide

- The small contact surface -arrow- must face the chain tensioner.

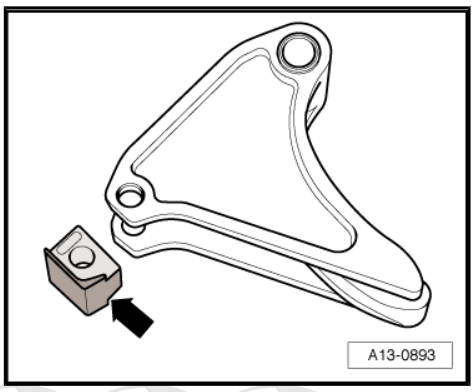

3.8 Removing and installing camshaft timing chains

Caution

The crankshaft and camshafts may only be turned when the engine is completely assembled and only via the crankshaft. This means that the timing chain covers and the chain tensioner for camshaft timing chain (right-side) must be installed.

Protected by copyright. Copying for private or commercial purposes, in part or in whole, is not permitted unless authorised by AUDI AG. AUDI AG does not guarantee or accept any liability with respect to the correctness of information in this document. Copyright by AUDI AG.

Note

The camshaft plate -T10068- is only used for locking the camshafts at TDC. Use an 32 mm open-end spanner to counterhold on flats of camshaft.

Special tools and workshop equipment required

♦ Locking pin -3242-

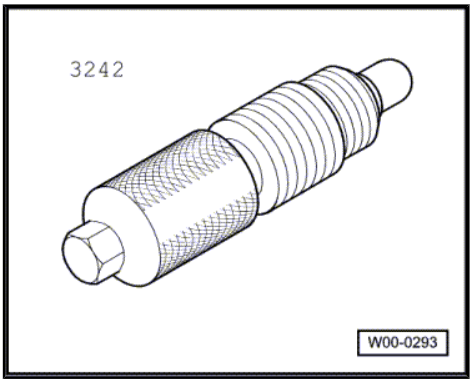

♦ Camshaft plate -T10068-

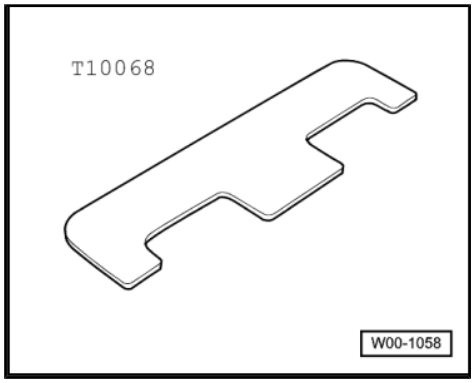

♦ Drill, ∅ 3.5 mm

3.8.1 Removing

- Engine removed.
- Engine separated from gearbox.

– Remove drive plate ⇒ page 56 .

– Remove top section of intake manifold ⇒ page 92 .

– Remove bottom section of intake manifold ⇒ page 99 .

– Remove cylinder head covers ⇒ page 88 .

– Turn the crankshaft via the central bolt in the normal direction of rotation to TDC.

- The marking -2- on vibration damper must align with the housing joint -1- ...

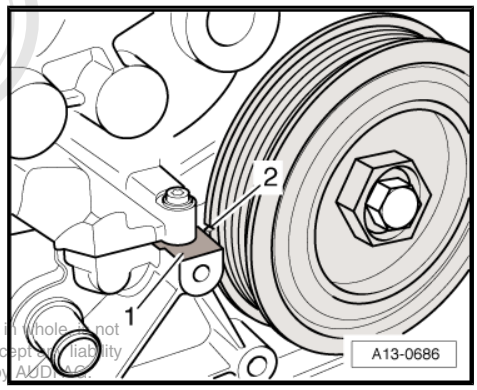

Protected by copyright. Copying for private or commercial purposes, in part or in whole, is not permitted unless authorised by AUDI AG. AUDI AG does not guarantee or accept any liability with respect to the correctness of information in this document. Copyright by AUDI AG.

- ... you must simultaneously be able to insert the camshaft plate -T10068- in both camshaft grooves.

– If necessary, turn crankshaft 1 turn further.

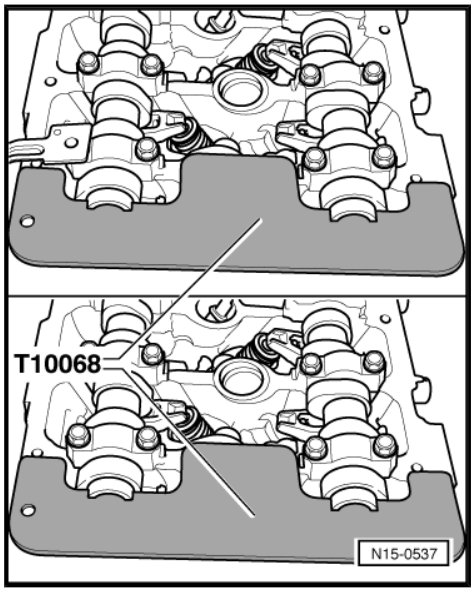

Note

It may be necessary to turn the camshafts back and forth slightly using a 32 mm open-end spanner. The camshaft plate -T10068- must not be in place when doing this.

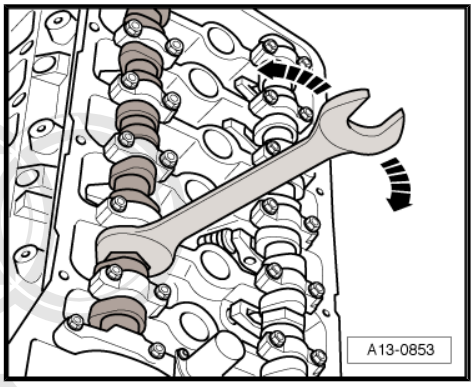

– Remove sealing plug from cylinder block (left-side).
– Screw the locking pin -3242- into the hole (20 Nm).

Protected by copyright. Copying for private or commercial purposes, in part or in whole, is not permitted unless authorised by AUDI AG. AUDI AG does not guarantee or accept any liability with respect to the correctness of information in this document. Copyright by AUDI AG.

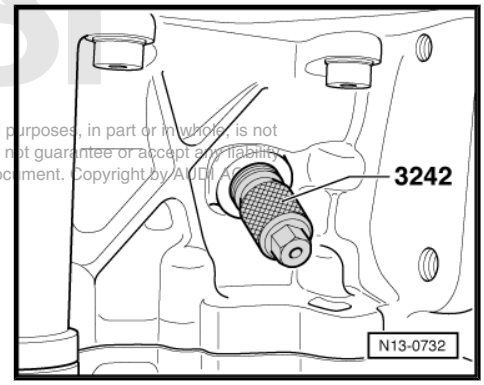

– Remove all timing chain covers ⇒ page 61 .
– If the old timing chains are going to be reused, mark the allocation (left and right) and the direction of rotation with a paint pen.

Caution

It is always necessary to remove and install both timing chains, otherwise you will not be able to position the installation markings correctly.

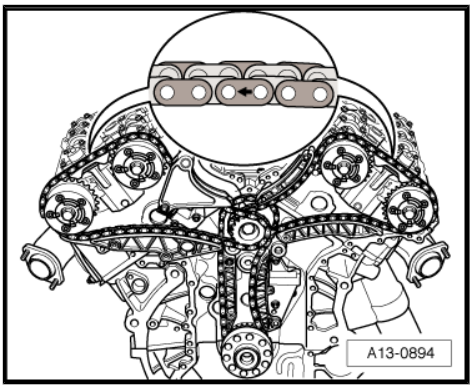

– Press down on chain tensioner for timing chain (cylinder bank 2, left-side) and lock in place using a drill bit ∅ 3.5 mm -Item 1-.
– Unscrew bolts -6- and remove chain tensioner -5-.
– Unscrew bolt -3- and remove slide -2-.
– Pull tensioning rail -4- off mounting pin.

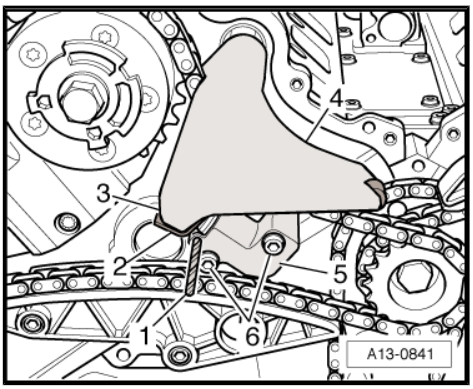

– Pull guide rail -1- off mounting pins.

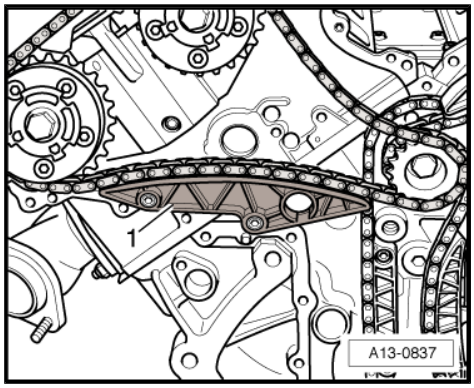

– Unscrew mounting pin -1-.
– Take off timing chain for cylinder bank 2 (left-side) starting on the inlet camshaft adjuster -2-.

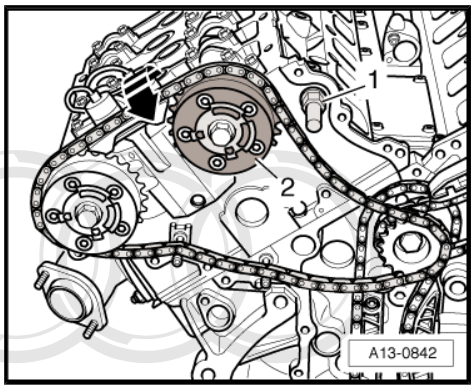

Note

Turn the camshaft adjusters back and forth slightly to ease removal of timing chain.

– Pull off the tensioning rail -1- and the guide rail -2- from mounting pins on cylinder bank 1 (right-side).

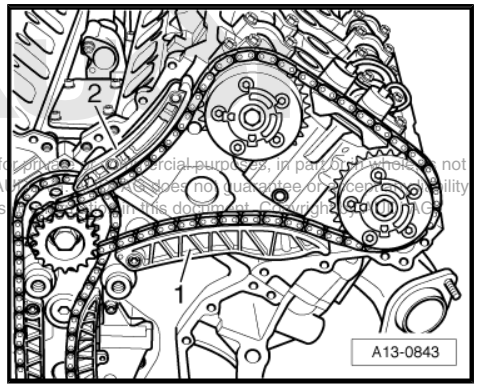

Note

To ease removal of guide rail, turn inlet camshaft on flats slightly to the left (take note of the camshaft plate).

Protected by copyright. Copying for private or commercial purposes, in part or in whole, is not permitted unless authorized by Audi AG. Audi AG does not guarantee or accept any liability with respect to the correctness of information in this document. Copyright by Audi AG.

– Unscrew mounting pin -1-.
– Take off timing chain for cylinder bank 1 (right-side) starting on the inlet camshaft adjuster -2-.

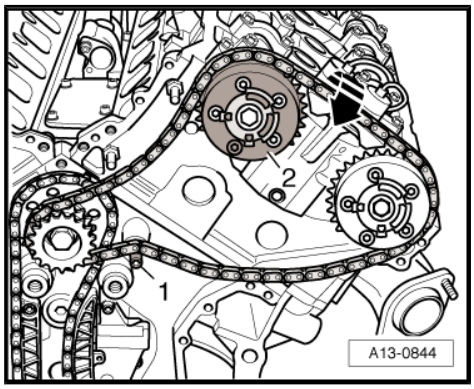

Note

Turn the camshaft adjusters back and forth slightly to ease removal of timing chain.

3.8.2 Installing

- Camshafts locked in TDC position with camshaft plate -T10068- .
- Crankshaft locked in TDC position with locking pin -3242- .
- Drive chain installed ⇒ page 82 .

– Place the timing chain for cylinder bank 1 (right-side) onto sprocket for camshaft drive and onto camshaft adjusters.

- The copper-coloured chain links face towards gearbox.
- The copper-coloured chain links must be positioned on the sprockets as shown in the illustration.
- The exact positions are shown in the following illustrations.

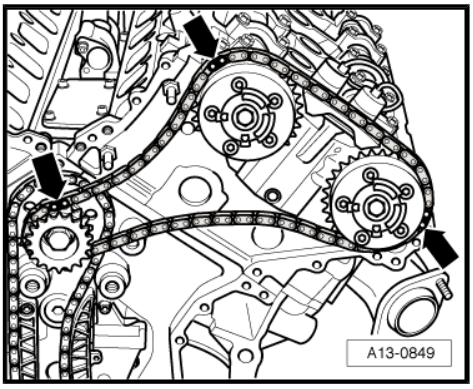

Chain sprocket for camshaft drive

- The copper-coloured chain link -1- must be aligned centrally with the threaded hole -2- when the chain -3- is tensioned.

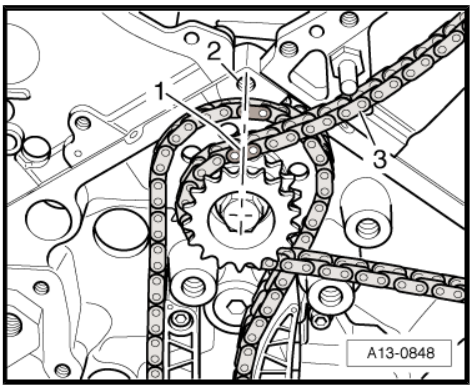

Note

The copper-coloured chain link of the drive chain (which lies behind it) is only positioned as shown in the illustration the first time it is installed. If the drive chain has not been removed, the position of the copper-coloured chain link is irrelevant.

Camshaft adjuster for exhaust camshaft

- The copper-coloured chain link -arrow- must align with the marking -1- on the exhaust camshaft adjuster.

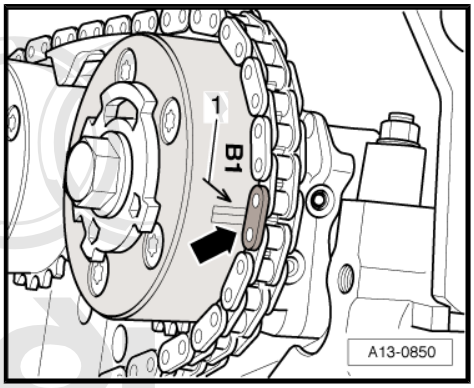

Camshaft adjuster for inlet camshaft

- The copper-coloured chain link -arrow- must align with the marking -1- on the inlet camshaft adjuster.

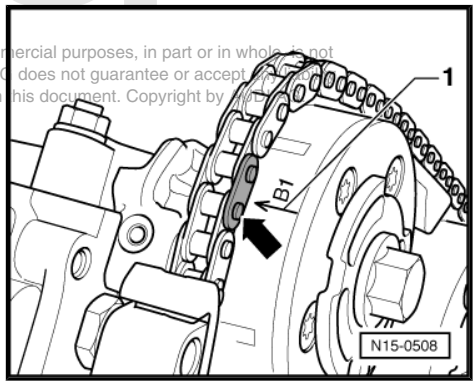

Protected by copyright. Copying for private or commercial purposes, in part or in whole, is not permitted unless authorised by AUDI AG. AUDI AG does not guarantee or accept any liability with respect to the correctness of information in this document. Copyright by AUDI AG.

– Insert guide rail -2- onto mounting pins.

– Attach the mounting pin and the tensioning rail -1-

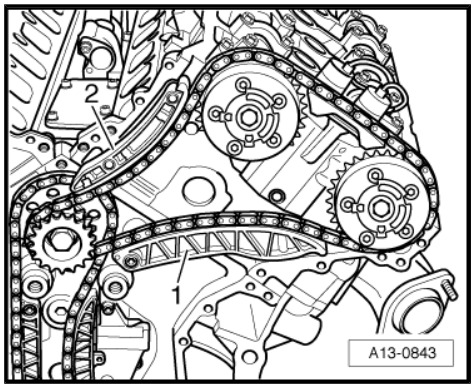

Note

If the guide rail cannot be attached with ease, turn the inlet camshaft adjuster slightly to the left (take note of the camshaft plate).

– Place the timing chain for cylinder bank 2 (left-side) onto sprocket for camshaft drive and onto camshaft adjusters.

- The copper-coloured chain links face the engine.
- The copper-coloured chain links must be positioned on the sprockets as shown in the illustration.
- The exact positions are shown in the following illustrations.

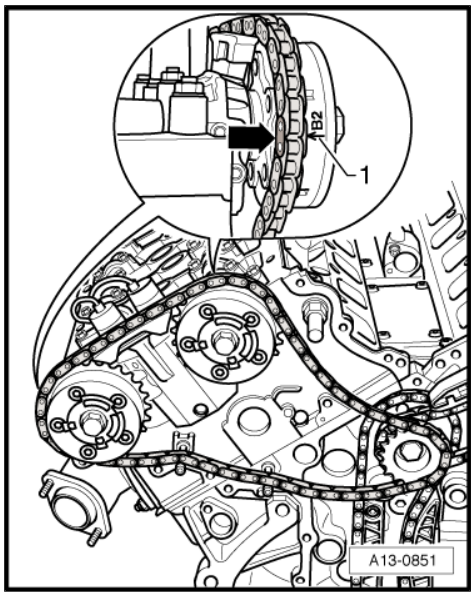

– Attach the guide rail -1- before checking the chain position.

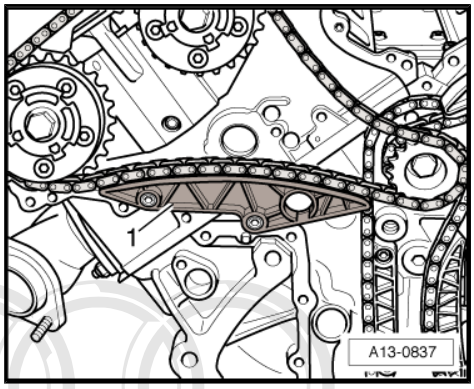

Chain sprocket for camshaft drive

- The copper-coloured chain link -1- must be aligned centrally with the threaded hole -3- when the chain -2- is tensioned.

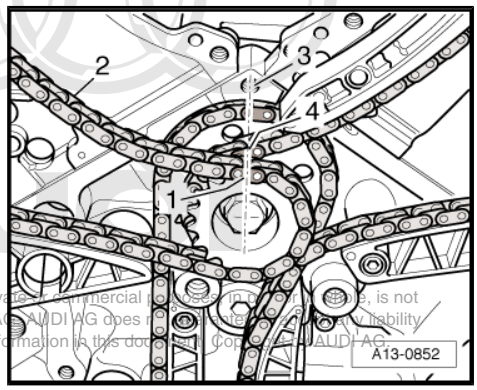

Note

For illustration purposes, the copper-coloured chain link -4- is shown facing outwards. However, it faces the engine when in its correct installed position.

Protected by copyright. Copying for private or commercial purposes, in part or in whole, is not permitted unless authorised by AUDI AG. AUDI AG does not guarantee or assume any liability with respect to the correctness of information in this document. Copyright by AUDI AG.

Checking: the copper-coloured chain links -1- and -4- on the camshaft timing chains (left and right cylinder bank) must align with each other and also centrally with the threaded hole -3-.

Camshaft adjuster for exhaust camshaft

- The copper-coloured chain link -arrow- must align with the marking -1- on the exhaust camshaft adjuster.

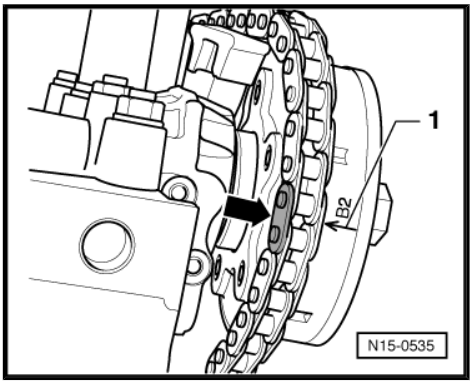

Camshaft adjuster for inlet camshaft

- The copper-coloured chain link -arrow- must align with the marking -1- on the inlet camshaft adjuster.

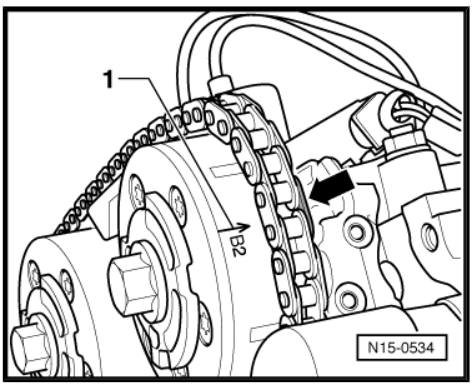

– Attach the mounting pin and the tensioning rail -4-
– Secure the slide -2- using bolt -3-.

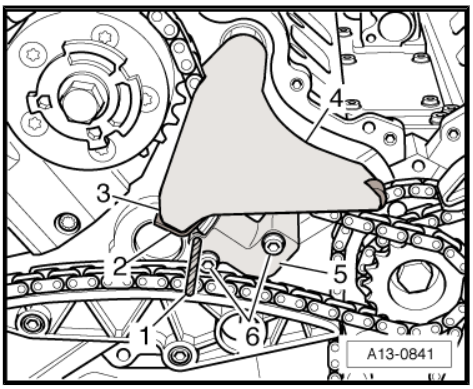

– Note the installation position:
- The small contact surface -arrow- must face the chain tensioner.

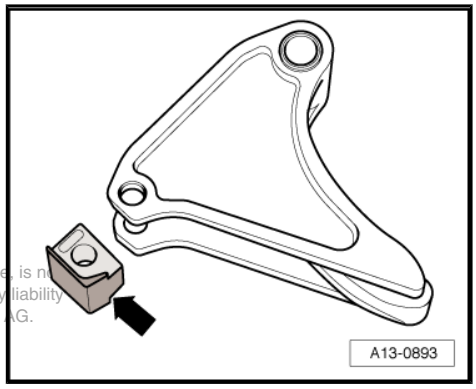

Protected by copyright. Copying for private or commercial purposes, in part or in whole, is not permitted unless authorised by AUDI AG. AUDI AG does not guarantee or accept any liability with respect to the correctness of information in this document. Copyright by AUDI AG.

– Secure chain tensioner -5- using bolts -6-.

– Pull out drill bit (∅ 3.5 mm) -Item 1- from hole; this releases the chain tensioner.

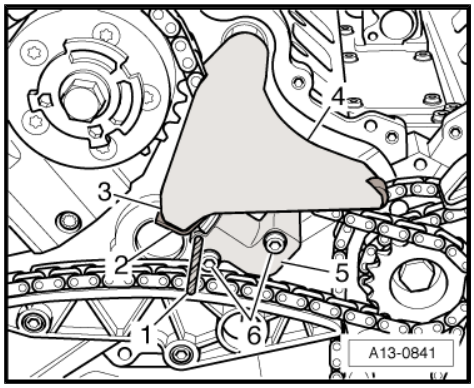

Note

Before continuing, check the installation position of the chain links (alignment with markings).

– Install timing chain covers ⇒ page 61 .

– Remove locking pin -3242- .

– Turn the crankshaft 2 turns in direction of engine rotation until the marking -2- on vibration damper aligns with the housing joint -1-.

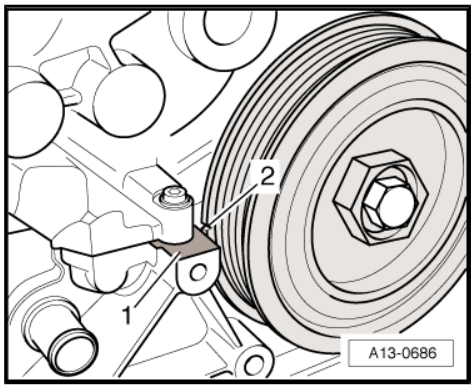

– Screw the locking pin -3242- into the hole (20 Nm).

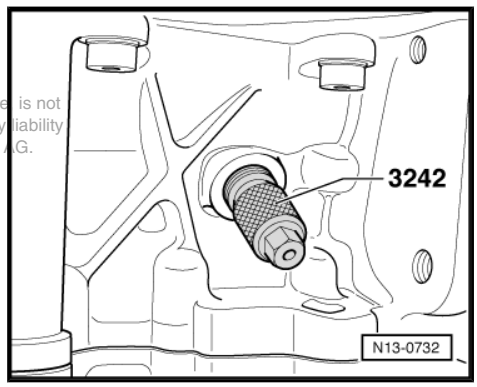

Protected by copyright. Copying for private or commercial purposes, in part or in whole, is not permitted unless authorised by AUDI AG. AUDI AG does not guarantee or accept any liability with respect to the correctness of information in this document. Copyright by AUDI AG.

• You must be able to insert the camshaft plate -T10068- in both camshaft grooves.

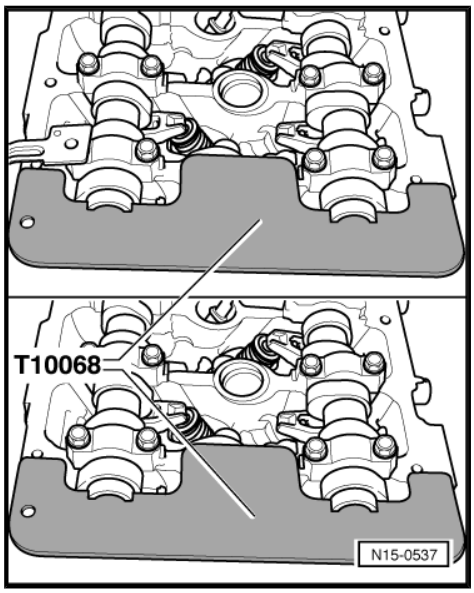

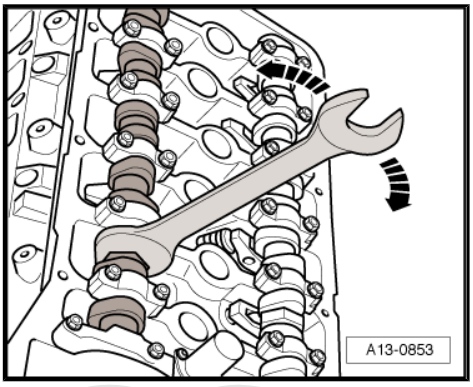

- It may be necessary to turn the camshafts back and forth slightly using a 32 mm open-end spanner. The camshaft plate -T10068- must not be in place when doing this.
- Remove camshaft plates -T10068- .
- Remove locking pin -3242- .
- Secure screw plug for the TDC mark into the top section of the sump with a new seal.

Perform further installation in reverse order, paying attention to the following:

- Install cylinder head covers ⇒ page 88 .
- Install bottom section of intake manifold ⇒ page 99 .
- Install top section of intake manifold ⇒ page 96 .
- Install drive plate ⇒ page 56 .

3.8.3 Tightening torques

Component	Nm
Mounting pin for tensioning rail (cylinder bank 1) to cylinder block	25
Mounting pin for tensioning rail (cylinder bank 2) to cylinder head	42
Slide to tensioning rail (cylinder bank 2)	20
Chain tensioner (cylinder bank 2) to cylinder head	9

Protected by copyright. Copying for private or commercial purposes, in part or in whole, is not permitted unless authorised by AUDI AG. AUDI AG does not guarantee or accept any liability with respect to the correctness of information in this document. Copyright by AUDI AG.

3.9 Drive chain - exploded view of components

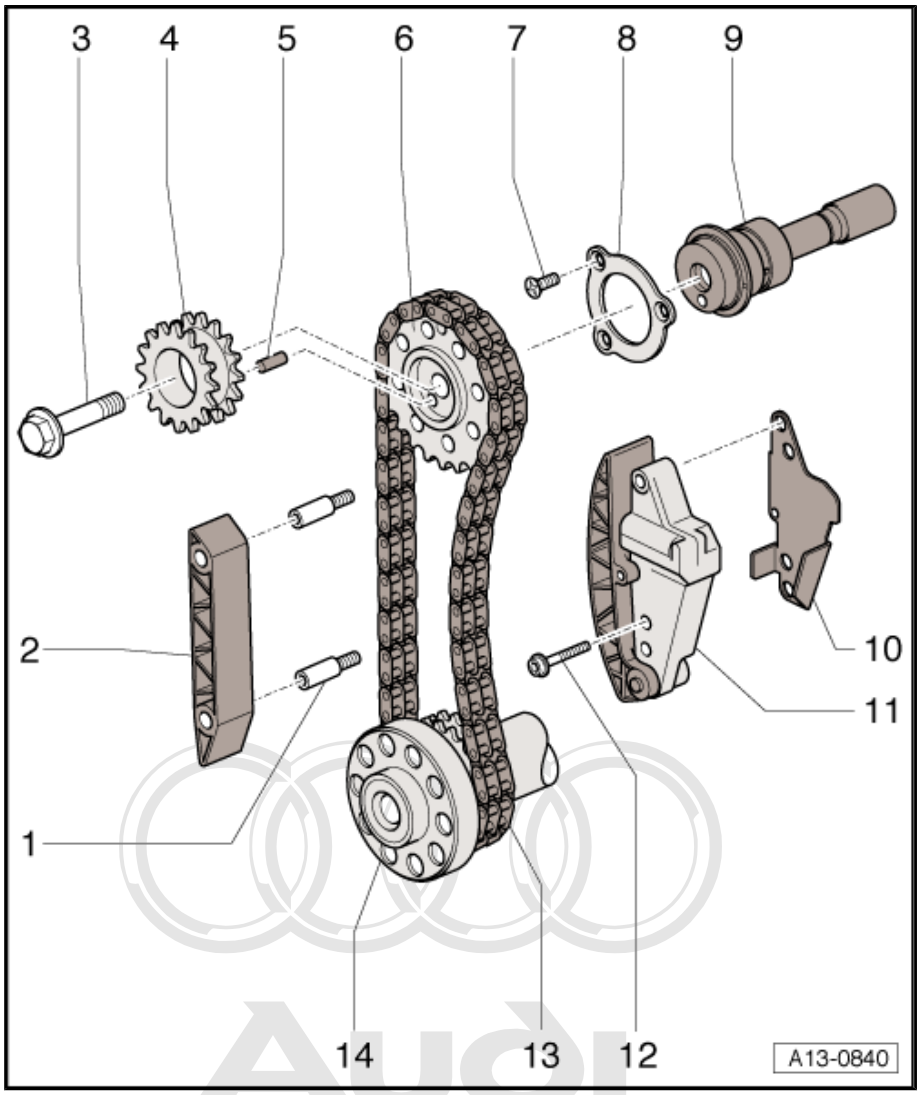

Protected by copyright. Copying for private or commercial purposes, in part or in whole, is not permitted unless authorised by AUDI AG. AUDI AG does not guarantee or accept any liability with respect to the correctness of information in this document. Copyright by AUDI AG.

1 - Mounting pin -15 Nm-
- ❑ Without collar
- ❑ For guide rail ⇒ Item 2 (page 80)

2 - Guide rail

3 - 60 Nm + 90° (1/4 turn) further
- ❑ Renew
- ❑ To loosen and tighten use tool -T10069- to counterhold on vibration damper.

4 - Chain sprocket for camshaft drive
- ❑ Removing and installing; see Removing and installing drive chain ⇒ page 80

5 - Pin

6 - Chain sprocket for drive chain
- ❑ Removing and installing; see Removing and installing drive chain ⇒ page 80

7 - Cross-head countersunk screw, 10 Nm
- ❑ Renew
- ❑ Install using locking fluid; locking fluid ⇒ Parts List

8 - Locking plate

9 - Intermediate shaft

10 - Gasket
- ❑ Renew

11 - Chain tensioner with guide rail
- ❑ For drive chain
- ❑ Lock chain tensioner with drill bit (∅ 3.5 mm)

12 - 9 Nm

13 - Timing chain
- ❑ Crankshaft / intermediate shaft

14 - Drive chain sprocket
- ❑ Integral part of crankshaft

3.10 Removing and installing drive chain

Special tools and workshop equipment required

♦ Counterhold -T10069-

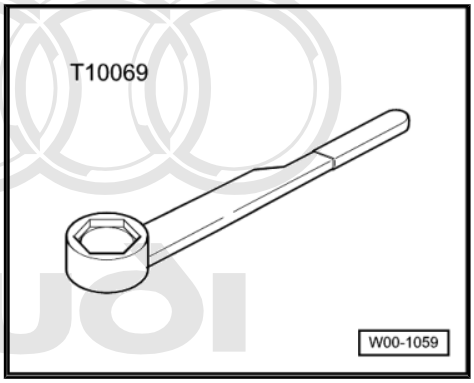

Protected by copyright. Copying for private or commercial purposes, in part or in whole, is not permitted unless authorised by AUDI AG. AUDI AG does not guarantee or accept any liability with respect to the correctness of information in this document. Copyright by AUDI AG.

3.10.1 Removing

- Engine removed.
- Engine separated from gearbox.

– Remove camshaft timing chains ⇒ page 71 .

– Counterhold crankshaft using the counterhold tool -T10069- at the vibration damper.

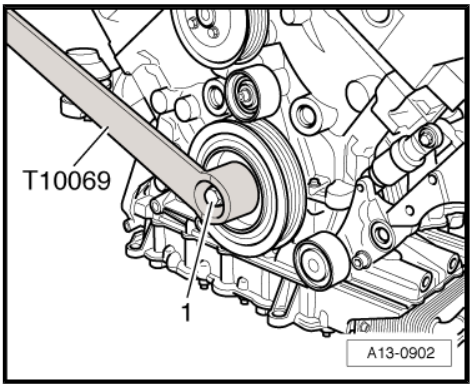

Note

Ignore item marked -1-.

– Unscrew bolt -1-.

– Remove chain sprocket for camshaft drive -2-.

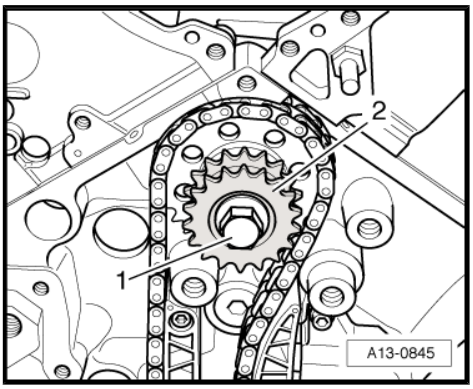

– Press down chain tensioner for drive chain and secure in position using drill bit ∅ 3.5 mm -Item 7-.
– Unscrew bolts -4- and -6- and remove chain tensioner -5- as well as the gasket.
– Pull guide rail -1- off mounting pins.
– Pull out the pin -2- and remove the drive chain sprocket -3-.

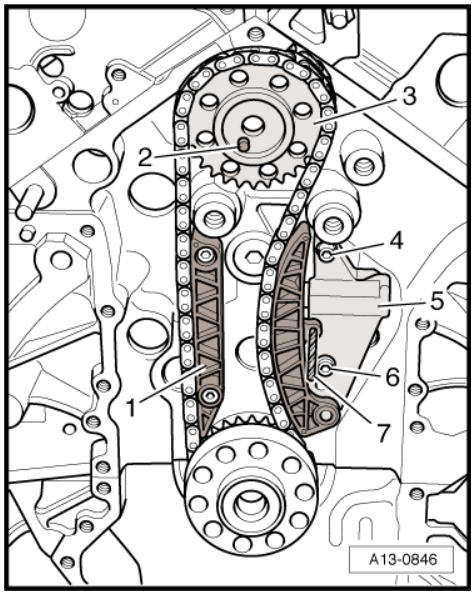

3.10.2 Installing

- Engine set to TDC.
- Crankshaft locked in TDC position with -3242-.

– Place drive chain onto crankshaft sprocket and drive chain sprocket.
- The copper-coloured chain links -1-and -5- must face towards gearbox.
- The bottom copper-coloured chain link -1- must align centrally with the housing joint -2-.
- The copper-coloured chain link -5- must be positioned so that the left link pin aligns with the threaded hole above it -4-.

– When attaching drive chain sprocket, insert the pin -3- into sprocket and intermediate shaft.
– To check for correct fitting of chain, press the right-side of chain by hand in the direction of the -arrow-.

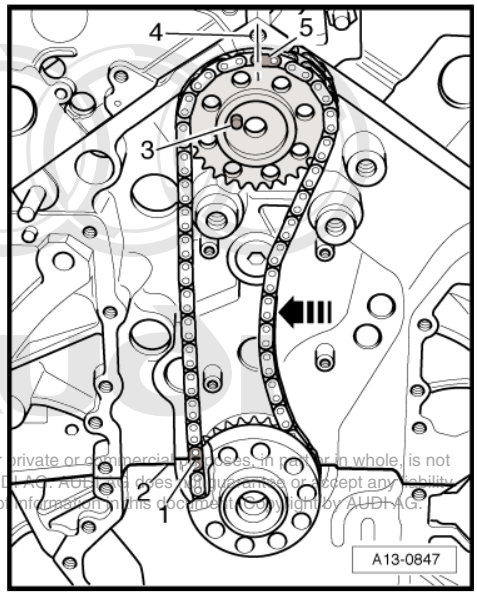

Protected by copyright. Copying for private or commercial purposes, in part or in whole, is not permitted unless authorised by AUDI AG. AUDI AG does not make any representation or accept any liability with respect to the correctness of information in this document. Copyright by AUDI AG.

– Insert guide rail -1- onto mounting pins.
– Renew gasket beneath chain tensioner -5-.
– Secure chain tensioner using bolts -4- and -6-.
– Pull out drill bit (∅ 3.5 mm) -Item 7- from hole; this releases the chain tensioner.

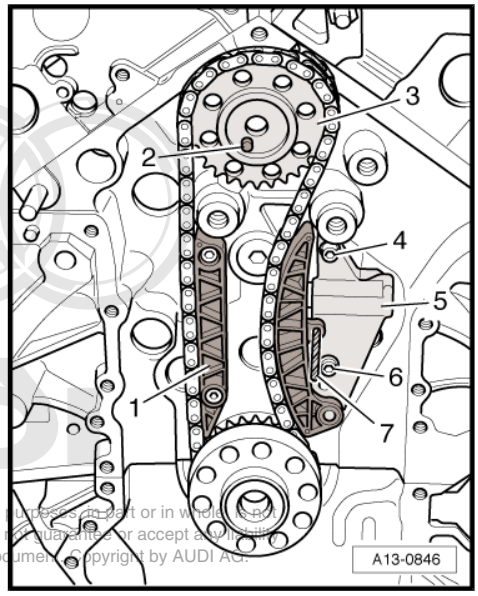

Protected by copyright. Copying for private or commercial purposes, in part or in whole, is not permitted unless authorised by AUDI AG. AUDI AG does not guarantee or accept any liability with respect to the correctness of information in this document. Copyright by AUDI AG.

– Secure the chain sprocket for camshaft drive -2- using bolt -1- ...

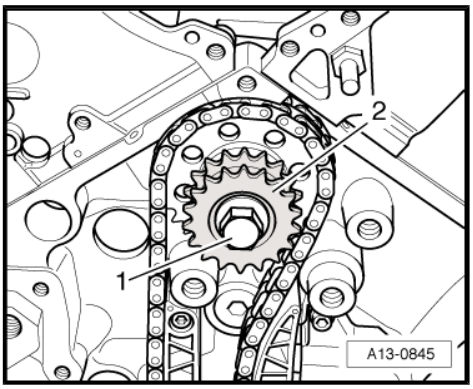

– ... to do so, apply counterhold -T10069- to crankshaft vibration damper for support.
– Install camshaft timing chains ⇒ page 74 .

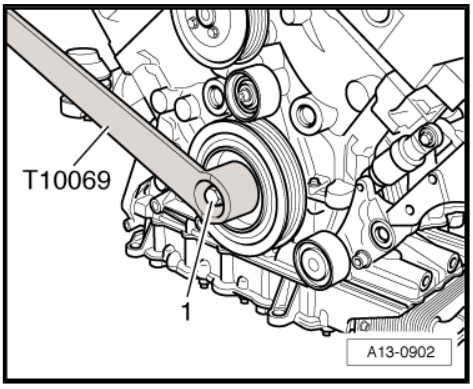

3.10.3 Tightening torques

Component	Nm
Chain tensioner for drive chain to cylinder block	9
Chain sprocket for camshaft drive to intermediate shaft	60 + 90°[12) 13)]

12) Renew bolt.

13) 90° equals a quarter of a turn.

15 – Cylinder head, valve gear

1 Removing and installing cylinder head

1.1 Cylinder head - exploded view of components

Note

Illustration shows cylinder head on bank 1 (right-side).

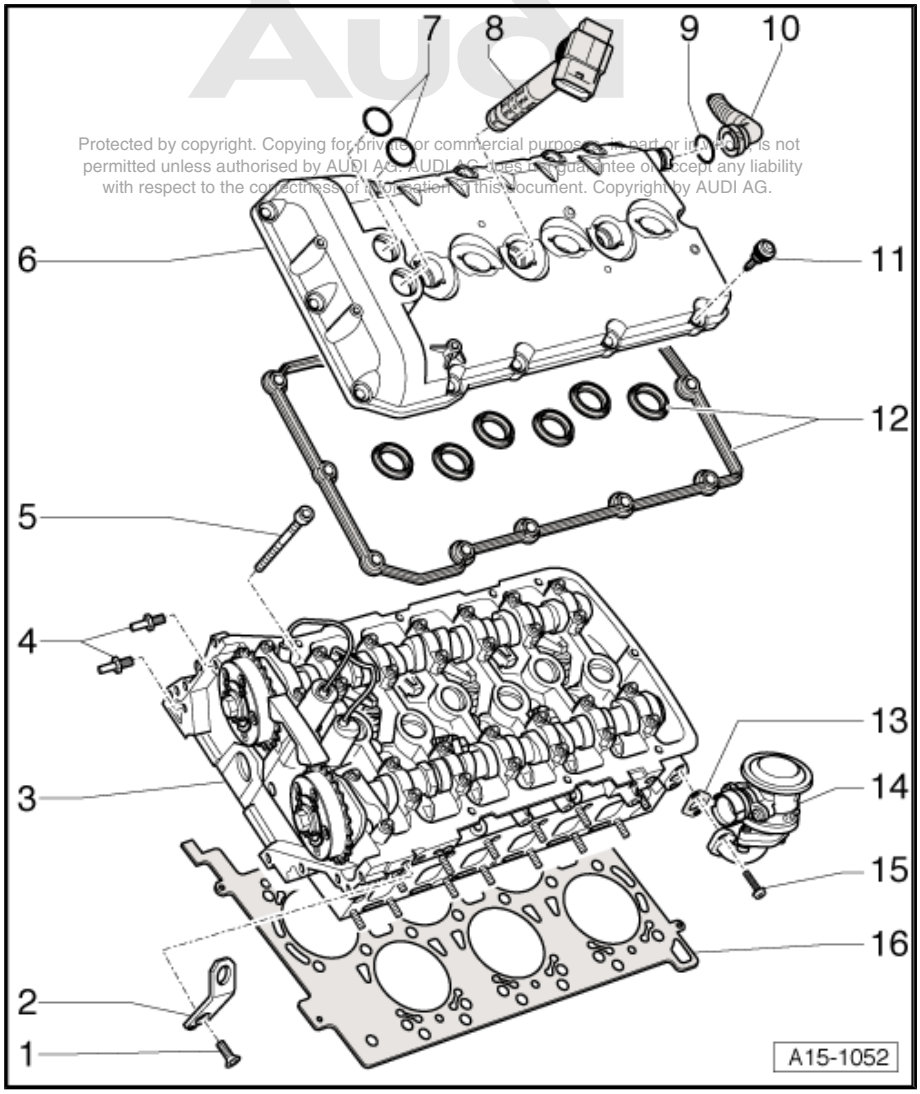

Protected by copyright. Copying for private or commercial purposes, in part or in whole, is not permitted unless authorised by AUDI AG. AUDI AG does not guarantee or accept any liability with respect to the correctness of information in this document. Copyright by AUDI AG.

1 - 23 Nm

2 - Lifting eye

3 - Cylinder head
- ❑ Removing ⇒ page 89
- ❑ Checking for distortion ⇒ page 85
- ❑ Installing ⇒ page 89
- ❑ After replacing, fill with new coolant

4 - Mounting pin -18 Nm-
- ❑ For guide rail
- ❑ For cylinder head (right-side)

5 - Cylinder head bolt
- ❑ Different lengths; the long bolts are for outer holes
- ❑ Renew
- ❑ Note sequence when loosening ⇒ page 89 and ⇒ page 89
- ❑ Note sequence when tightening ⇒ page 91 and ⇒ page 91

6 - Cylinder head cover
- ❑ Removing and installing ⇒ page 85

7 - O-rings
- ❑ Renew

8 - Ignition coil
- ❑ Remove with puller - T10166- ⇒ page 85

9 - O-ring
- ❑ Renew

10 - Crankcase breather pipe

11 - Special bolt -8 Nm-
- ❑ Renew if damaged or leaking

- ❑ Note sequence when tightening ⇒ page 88

12 - Gaskets for cylinder head cover

- ❑ Renew if damaged or leaking

13 - Gasket

- ❑ Renew

14 - Combination valve for secondary air

15 - 10 Nm

16 - Cylinder head gasket

- ❑ Different versions for cylinder bank 1 (right-side) and cylinder bank 2 (left-side)
- ❑ Renewing; see Removing cylinder head ⇒ page 89
- ❑ Installation position: Part No. towards cylinder head
- ❑ After replacing, renew coolant completely

Removing ignition coils

– Disconnect the ignition coils from the spark plugs using puller -T10166- .

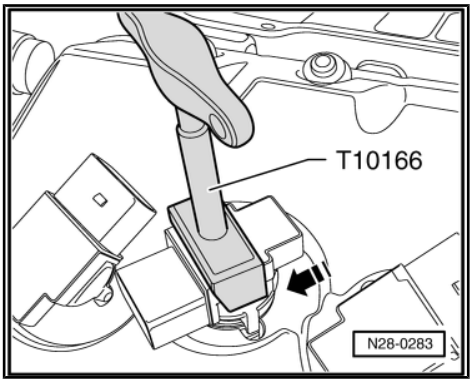

Checking cylinder head for distortion

– Use straight edge and feeler gauge to measure for distortion at several points.

• Maximum permissible distortion: 0.05 mm

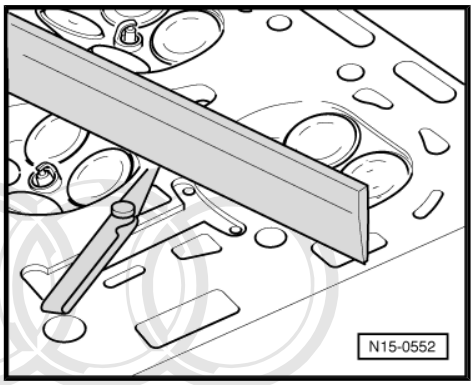

1.2 Removing and installing cylinder head cover

Special tools and workshop equipment required

Protected by copyright. Copying for private or commercial purposes, in part or in whole, is not permitted unless authorised by AUDI AG. AUDI AG does not guarantee or accept any liability with respect to the correctness of information in this document. Copyright by AUDI AG.

- Puller -T10166-

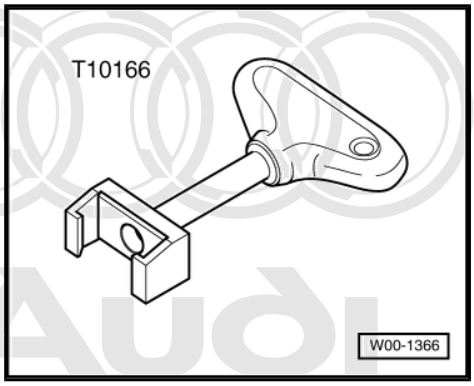

- Sealant ⇒ Parts catalogue

Protected by copyright. Copying for private or commercial purposes, in part or in whole, is not permitted unless authorised by AUDI AG. AUDI AG does not guarantee or accept any liability with respect to the correctness of information in this document. Copyright by AUDI AG.

Note

- *The following description applies to cylinder head bank 2 (left-side) with the engine removed.*
- *The procedures for cylinder head on bank 1 are the same.*

1.2.1 Removing

– Remove top section of intake manifold ⇒ page 92 .

– Unclip cover -1- for air duct (left-side) on lock carrier in engine compartment.

– Remove air duct -2-.

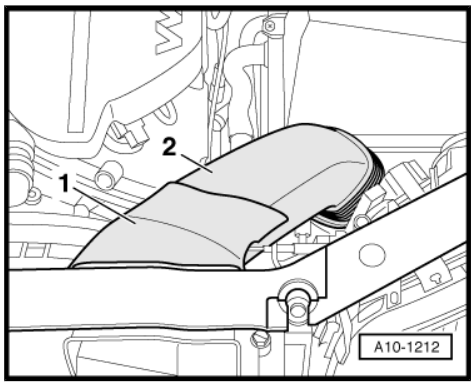

– Disconnect hoses -2- and -3-.

– Unscrew bolts -2- and -5- and remove combination valve for secondary air.

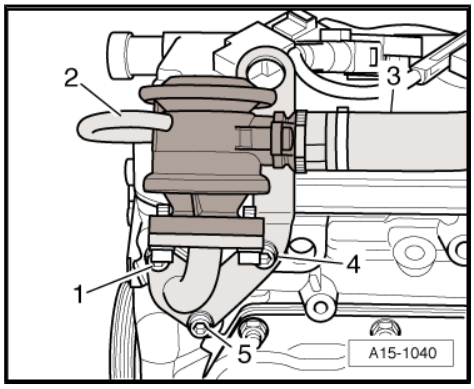

– Unplug electrical connector at the secondary air inlet valve -arrow-.
– Detach secondary air inlet valve at bracket and place to side with vacuum hoses attached.

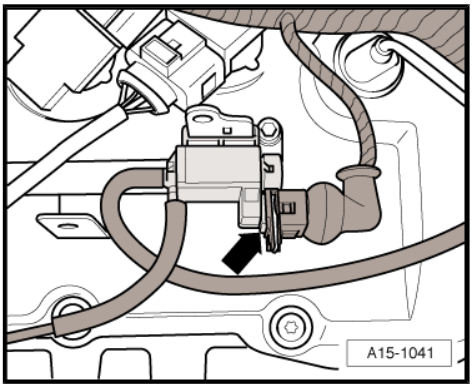

– Unscrew bolts -arrows-.

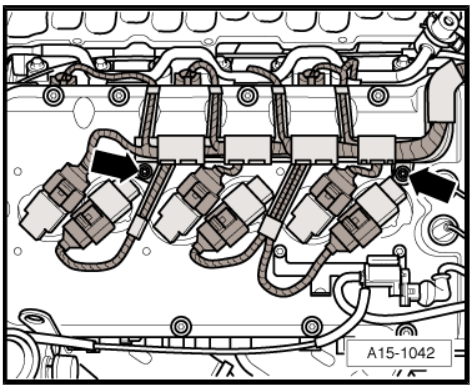

– Disconnect the ignition coils from the spark plugs using puller -T10166- .
– Place wiring harness with ignition coils to side.

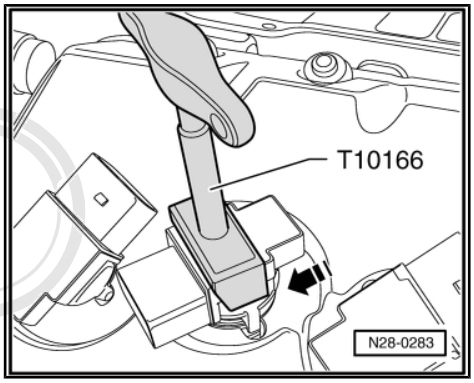

– Detach electrical connectors -1- and -2- (brown and black) from bracket at camshaft control valves and unplug connectors.
– Unbolt bracket for electrical connectors at cylinder head cover.

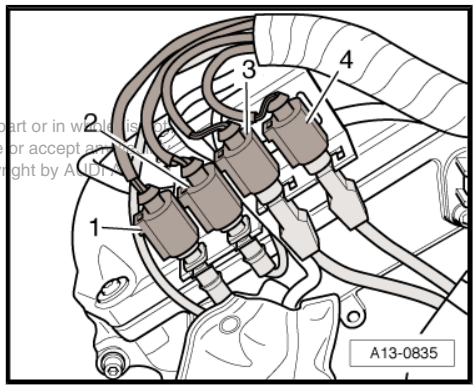

Protected by copyright. Copying for private or commercial purposes, in part or in whole, is not permitted unless authorised by AUDI AG. AUDI AG does not guarantee or accept any liability with respect to the correctness of information in this document. Copyright by AUDI AG.

– Remove crankcase breather pipe from front of cylinder head cover.
– Unscrew cylinder head cover bolts (left-side) in the sequence -1 ... 12-.
– Remove cylinder head cover.

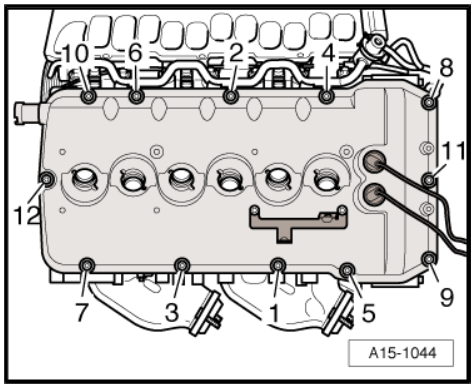

1.2.2 Installing

Installation is carried out in the reverse order; note the following:

Note

- *Renew seals and O-rings.*
- *Renew cylinder head cover gaskets if damaged.*
- *Renew securing bolts if damaged or leaking occurs.*

– Apply a small amount of sealant at joints -arrows- between timing chain cover and cylinder head; sealant ⇒ Parts catalogue .

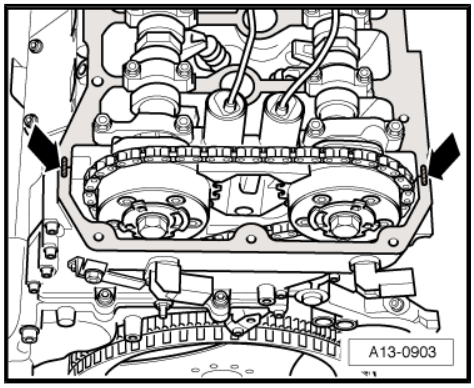

– Tighten bolts for cylinder head cover in the sequence -1 ... 12-.
– Install top section of intake manifold ⇒ page 96 .

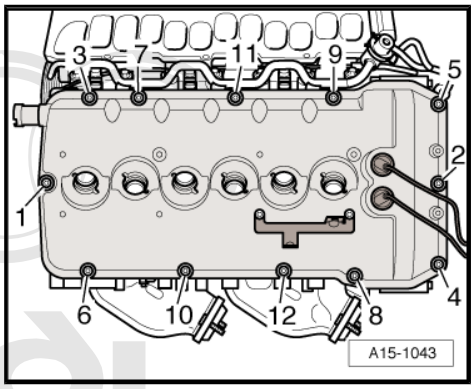

1.2.3 Tightening torques

Component		Nm
Cylinder head cover to cylinder head		8
Combination valve for secondary air	M 6	9
with flange to cylinder head	M 8	22

Protected by copyright. Copying for private or commercial purposes, in part or in whole, is not permitted unless authorised by AUDI AG. AUDI AG does not guarantee or accept any liability with respect to the correctness of information in this document. Copyright by AUDI AG.

1.3 Removing cylinder head

- Engine removed.
- Engine separated from gearbox.

– Remove camshaft timing chains ⇒ page 71 .

Cylinder bank 1 (right-side):

– Loosen cylinder head bolts in the sequence -1 ... 20-.

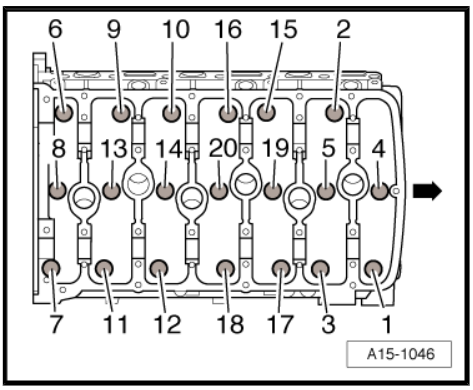

Note

Arrow points in direction of travel.

Cylinder bank 2 (left-side):

– Loosen cylinder head bolts in the sequence -1 ... 21-.

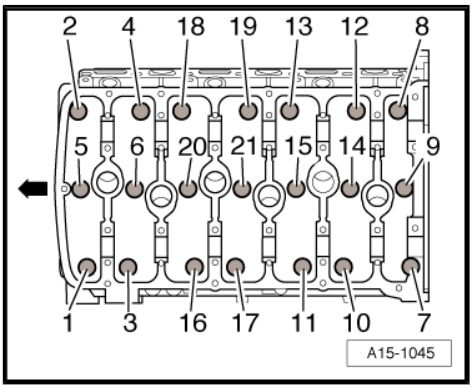

Note

Arrow points in direction of travel.

Continued for both cylinder banks:

– Carefully remove the cylinder head.

1.4 Installing cylinder head

Note

- *Renew the cylinder head bolts.*
- *On assembly, renew oil seals and gaskets as well as self-locking nuts and bolts that are tightened by turning through to a specified angle.*
- *If repairing, carefully remove any remaining gasket material from the cylinder head and cylinder block. Ensure that no long scores or scratches are made on the surfaces.*

Protected by copyright. Copying for private or commercial purposes, in part or in whole, is not permitted. Distribution via networks or storage in any other electronic media is only with respect to the correctness of information in this document. Copyright by AUDI AG.

- *Carefully remove any remaining emery and abrasive material.*
- *No oil or coolant must be allowed to remain in the blind holes for the cylinder head bolts in the cylinder block.*
- *Do not remove new cylinder head gasket from packaging until it is ready to be fitted.*
- *Handle gasket very carefully. Damage to the silicone coating or the indented area will lead to leaks.*
- *When fitting a new cylinder head or cylinder head gasket, drain off all the old coolant and refill with new coolant.*

Special tools and workshop equipment required

♦ Locking pin -3242-

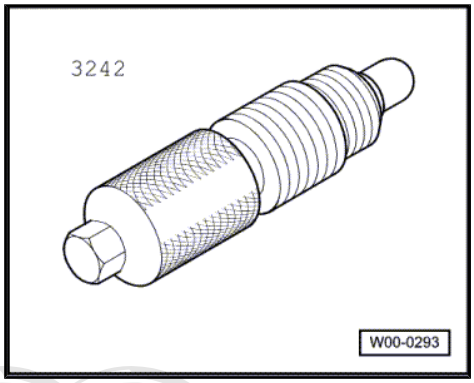

♦ Camshaft plate -T10068-

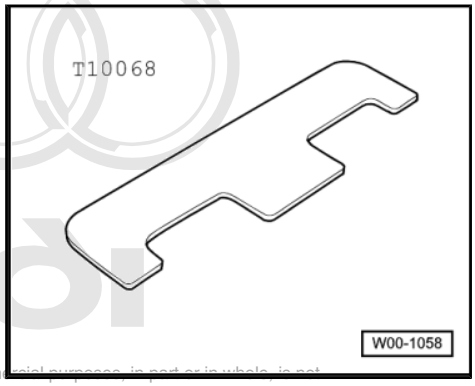

Protected by copyright. Copying for private or commercial purposes, in part or in whole, is not permitted unless authorised by AUDI AG. AUDI AG does not guarantee or accept any liability with respect to the correctness of information in this document. Copyright by AUDI AG.

1.4.1 Procedure

Installation is carried out in the reverse order; note the following:

– Before fitting cylinder heads, set crankshaft and camshafts to TDC:

• You must be able to insert the camshaft plate -T10068- in both camshaft grooves ...

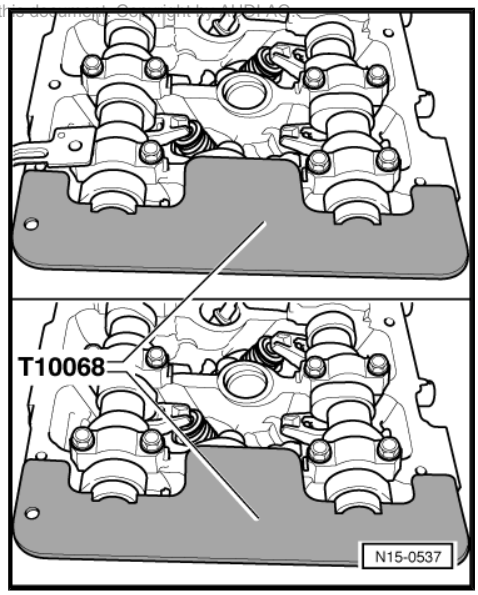

• . . . and the locking pin -3242- must be screwed in.

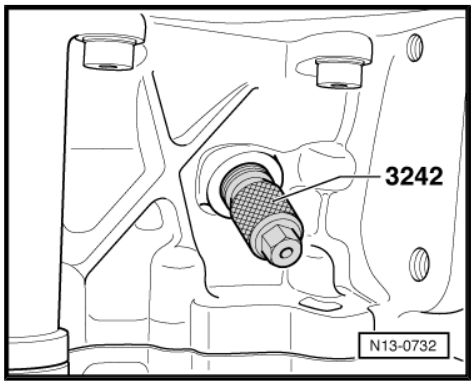

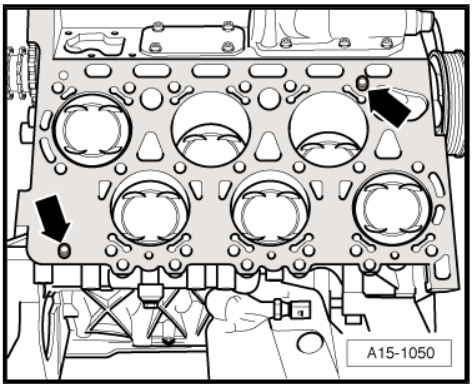

– Fit new cylinder head gasket.
- Note centring sleeves -arrows- in cylinder block.
- Check installation position of cylinder head gasket: the word “oben” (top) or the Part No. should face towards the cylinder head.
– Fit the cylinder head.
– Insert new cylinder head bolts and tighten finger-tight.
- Allocation: the long bolts are screwed into outer holes.
– Tighten cylinder head in 4 stages in the sequence shown:

Stage	Tightening
I	– Tighten with torque wrench to 30 Nm.
II	– Tighten with torque wrench to 50 Nm.
III	– Turn 90° ($^1/_4$ turn) further using a rigid wrench.
IV	– Turn 90° ($^1/_4$ turn) further using a rigid wrench.

Note

Re-tightening of cylinder head bolts is not necessary on completion of repair work.

Tightening sequence for cylinder bank 1 (right-side):

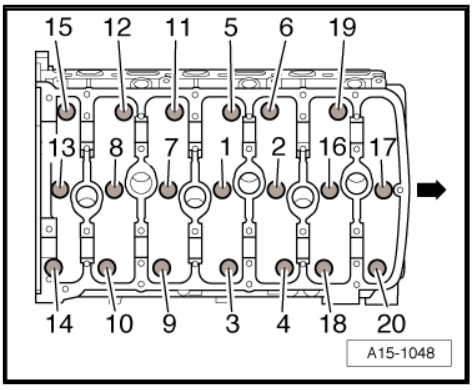

Note

Arrow points in direction of travel.

Tightening sequence for cylinder bank 2 (left-side):

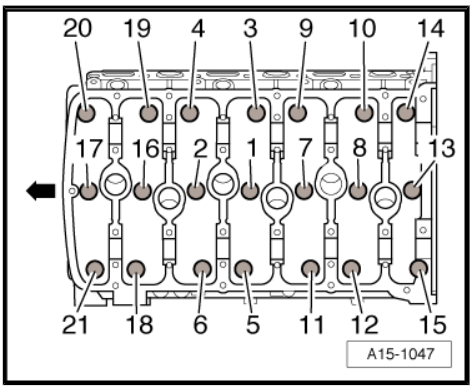

Note

Arrow points in direction of travel.

Perform further installation in reverse order, paying attention to the following:

– Install camshaft timing chains ⇒ page 74 .
– Install cylinder head covers ⇒ page 88 .
– Install bottom section of intake manifold ⇒ page 99 .
– Install top section of intake manifold ⇒ page 96 .
– Install drive plate ⇒ page 56 .

Protected by copyright. Copying for private or commercial purposes, in part or in whole, is not permitted unless authorised by AUDI AG. AUDI AG does not guarantee or assume any liability with respect to the correctness of information in this document. Copyright by AUDI AG.

2 Removing and installing intake manifold

2.1 Intake manifold - exploded view of components

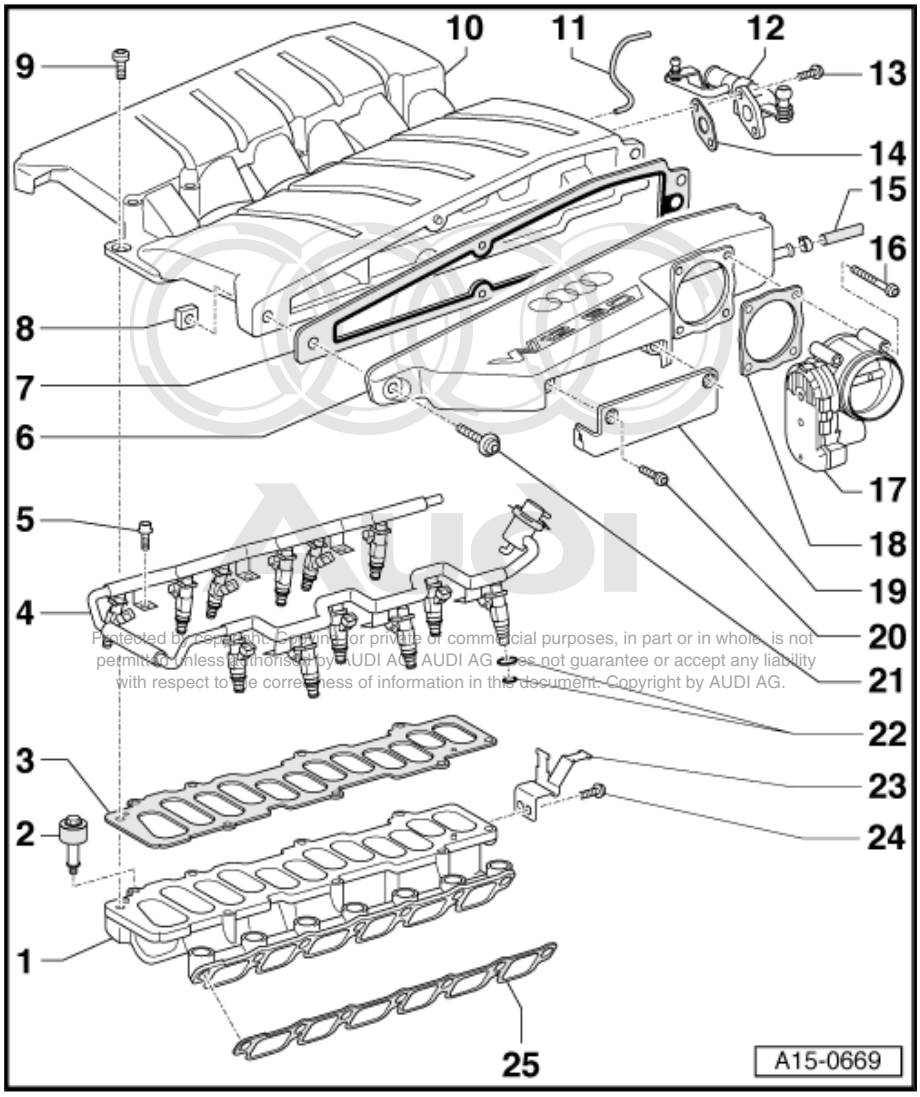

Protected by copyright. Copying for private or commercial purposes, in part or in whole, is not permitted unless authorised by AUDI AG. AUDI AG does not guarantee or accept any liability with respect to the correctness of information in this document. Copyright by AUDI AG.

1 - Bottom section of intake manifold

- ❑ Removing and installing ⇒ page 99

2 - 9 Nm

3 - Gasket

- ❑ Renew

4 - Fuel rail

- ❑ Removing and installing ⇒ Motronic injection and ignition system (12-cyl.); Rep. Gr. 24

5 - 8 Nm

6 - Side section of intake manifold

- ❑ Removing and installing left section of intake manifold ⇒ page 93
- ❑ Removing and installing right section of intake manifold ⇒ page 95

7 - Gasket

- ❑ Renew

8 - Square nut

9 - 7 Nm +180° ($^1/_2$ turn) further

- ❑ Renew
- ❑ Note different bolt lengths
- ❑ Starting from the centre, tighten in stages and in diagonal sequence

10 - Top section of intake manifold

- ❑ Removing and installing ⇒ page 96

11 - Vacuum hose

12 - Pipe connection

13 - 8 Nm

14 - Gasket

- ❑ Renew

15 - Vacuum hose

- ❑ To brake servo

16 - 8 Nm

17 - Throttle valve module -J338-

18 - Gasket
- ❑ Renew

19 - Bracket
- ❑ For connectors of lambda probe and lambda probe heating

20 - 8 Nm

21 - 22 Nm
- ❑ No tolerance, adhere exactly to tightening torque

22 - O-rings
- ❑ Renew
- ❑ Coat with fuel when installing
- ❑ Do not use silicon-based lubricant

23 - Bracket

24 - 8 Nm

25 - Gasket
- ❑ Renew
- ❑ Press into cylinder head

2.2 Removing and installing left section of intake manifold

– Remove cover behind intake manifold -arrows-.

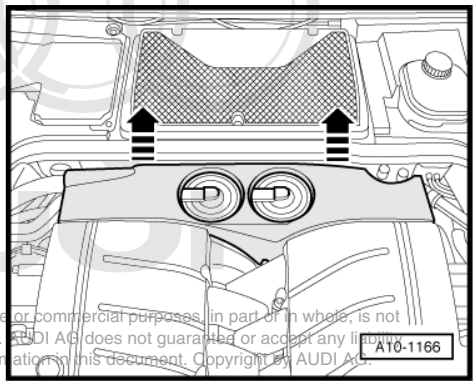

Protected by copyright. Copying for private or commercial purposes, in part or in whole, is not permitted unless authorised by AUDI AG. AUDI AG does not guarantee or accept any liability with respect to the correctness of information in this document. Copyright by AUDI AG.

– Remove cover (left-side) in engine compartment -arrows-.

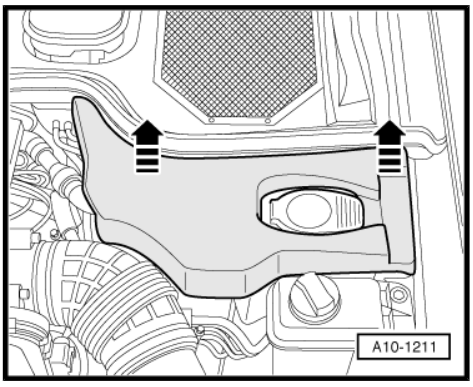

– Remove air hose (left-side) -arrows-.

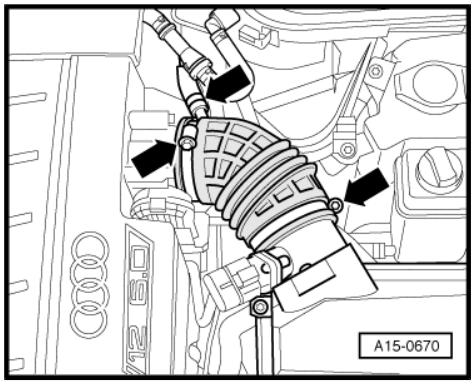

– Detach vacuum hose -arrow- to brake servo on left section of intake manifold.

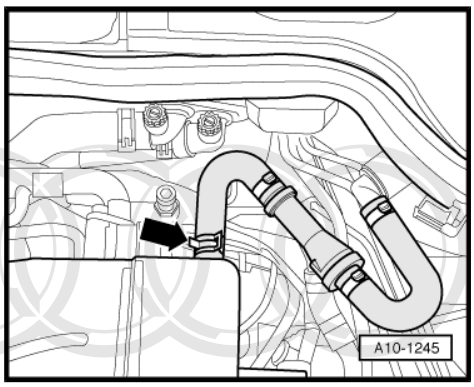

– Detach electrical connector -4-.

Note

Take care that the square nut does not fall when loosening bolt -1-.

– Unscrew bolts -1 … 3- and remove left section of intake manifold.

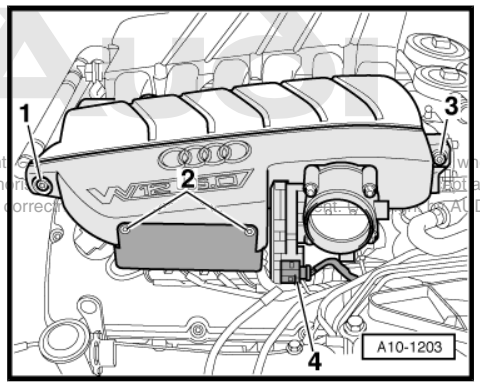

Reproduction copyright ... whole, is not permitted unless authorised ... any liability with respect to the correctness ... AUDI AG.

2.2.1 Installing

Installation is carried out in the reverse order; note the following:

Note

Renew seals and gaskets.

2.2.2 Tightening torques

Component	Nm
Side section of intake manifold to top section of intake manifold	22 [14)]
Bracket for connectors to side section of intake manifold	8

14) No tolerance, adhere exactly to tightening torque.

2.3 Removing and installing right section of intake manifold

– Remove cover behind intake manifold -arrows-.

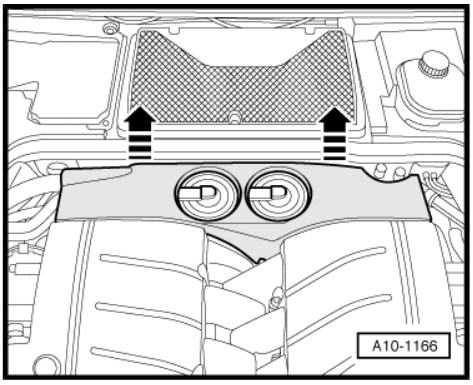

Protected by copyright. Copying for private or commercial purposes, in part or in whole, is not permitted unless authorised by AUDI AG. AUDI AG does not guarantee or accept any liability with respect to the correctness of information in this document. Copyright by AUDI AG.

– Remove cover (right-side) in engine compartment -arrows-.

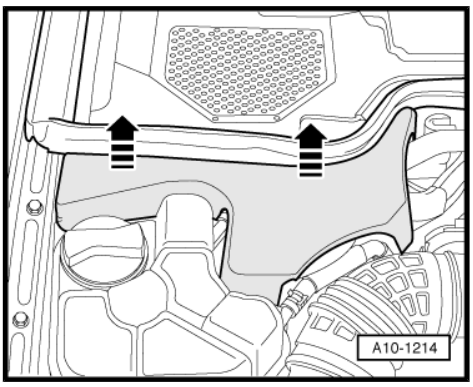

– Remove air hose (right-side) -arrows-.
– Unscrew filler cap for oil filler neck.

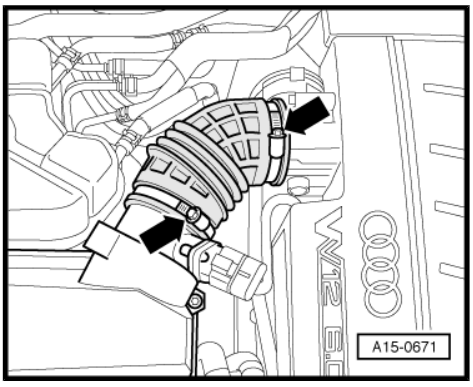

– Detach electrical connector -1-.

Note

Take care that the square nut does not fall when loosening bolt -4-.

– Unscrew bolts -1 ... 4- and remove right section of intake manifold.

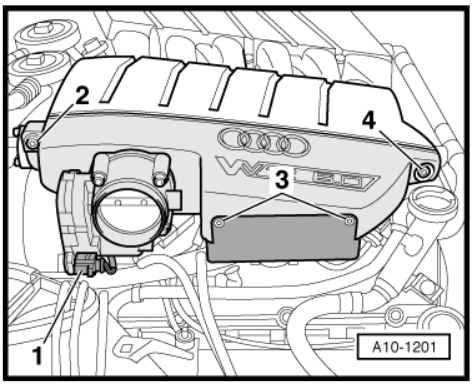

2.3.1 Installing

Installation is carried out in the reverse order; note the following:

Note

Renew seals and gaskets.

2.3.2 Tightening torques

Component	Nm
Side section of intake manifold to top section of intake manifold	22 [15)]
Bracket for connectors to side section of intake manifold	8

15) No tolerance, adhere exactly to tightening torque.

2.4 Removing and installing top section of intake manifold

– Remove cover behind intake manifold -arrows-.

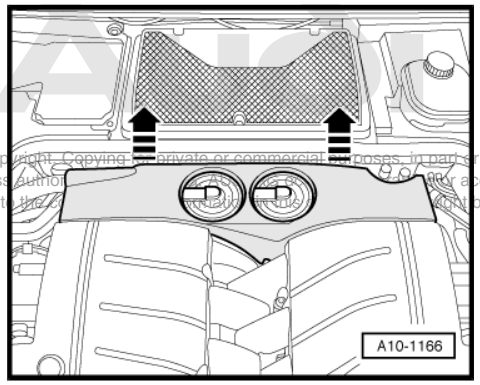

Protected by copyright. Copying for private or commercial purposes, in part or in whole, is not permitted unless authorized by AUDI AG. AUDI AG does not guarantee or accept any liability with respect to the correctness of information in this document. Copyright by AUDI AG.

– Remove cover (left-side) in engine compartment -arrows-.

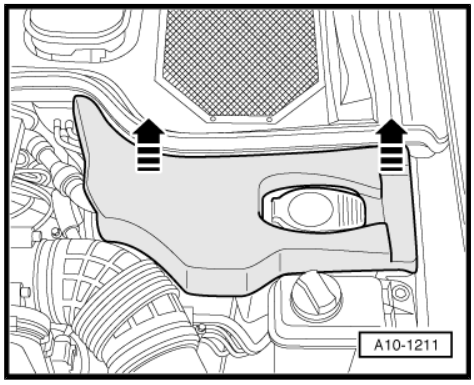

– Remove air hose (left-side) -arrows-.

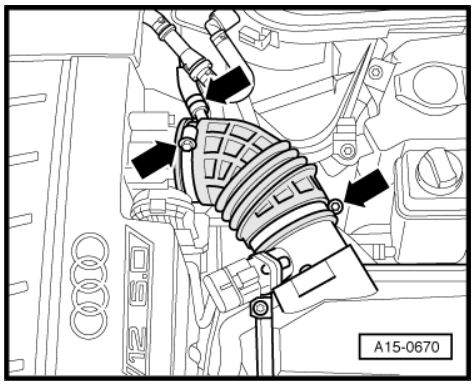

– Detach vacuum hose -arrow- to brake servo on left section of intake manifold.

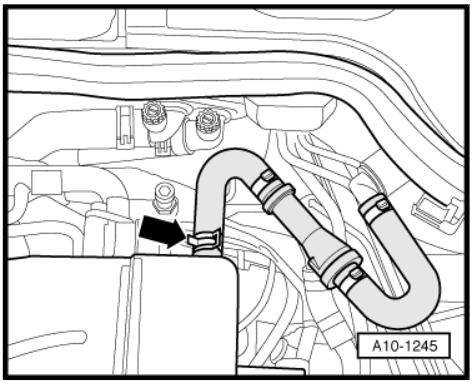

– Detach electrical connector -4-.

– Unscrew bolts -2- and detach bracket for electrical connectors. The electrical connectors remain attached to bracket.

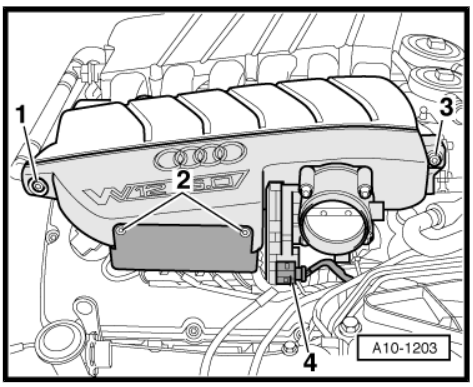

Note

Bolts -1- and -3- do not have to be loosened.

– Remove cover (right-side) in engine compartment -arrows-.

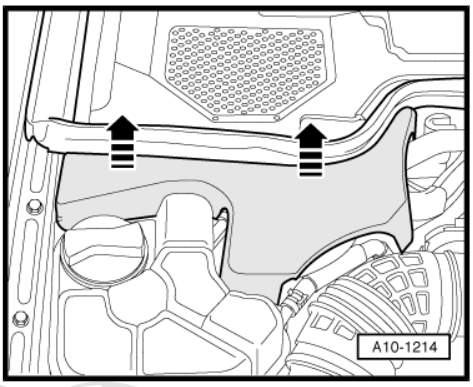

– Remove air hose (right-side) -arrows-.

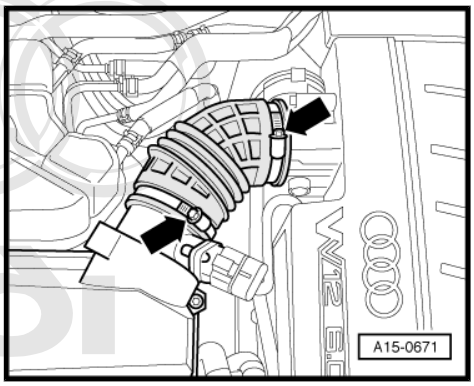

Protected by copyright. Copying for private or commercial purposes, in part or in whole, is not permitted unless authorised by AUDI AG. AUDI AG does not guarantee or accept any liability with respect to the correctness of information in this document. Copyright by AUDI AG.

– Detach electrical connector -1-.

– Unscrew bolts -3- and detach bracket for electrical connectors. The electrical connectors remain attached to bracket.

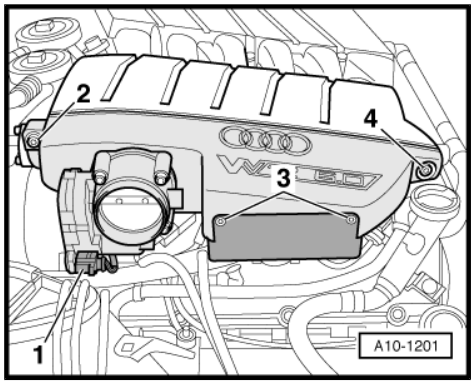

Note

Bolts -2- and -4- do not have to be loosened.

– Disconnect vacuum hoses -1- and -4-.

– Remove pipe connection from intake manifold by unscrewing bolts -2- and -3-.

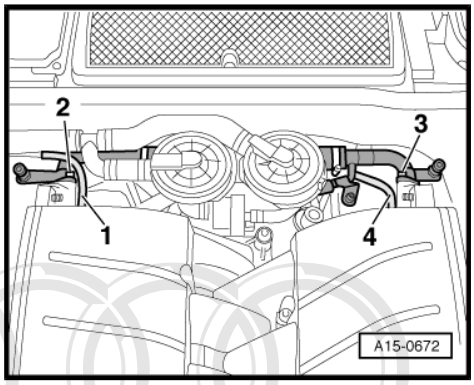

– Remove top section of intake manifold by unscrewing bolts -1- and -2-

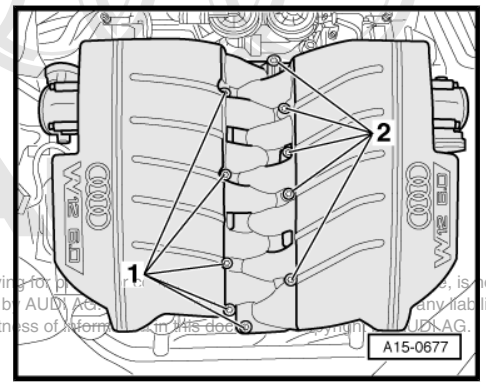

Note

Seal intake ports on cylinder heads with clean cloths.

Protected by copyright. Copying for private or commercial purposes, in part or in whole, is not permitted unless authorised by AUDI AG. AUDI AG does not guarantee or assume any liability with respect to the correctness of information in this document. Copyright by AUDI AG.

2.4.1 Installing

Installation is carried out in the reverse order; note the following:

Note

- *Renew aluminium bolts.*
- *Renew seals and gaskets.*

2.4.2 Tightening torques

Component	Nm
Intake manifold (top section) to intake manifold (bottom section)	7 + 180° 16) 17) 18)
Pipe connection to intake manifold (top section)	8
Side section of intake manifold to top section of intake manifold	22 19)
Bracket for connectors to side section of intake manifold	8

16) Renew bolts.

17) 180° equals half of a turn.

18) Note different bolt lengths

19) No tolerance, adhere exactly to tightening torque.

2.5 Removing and installing bottom section of intake manifold

– Remove top section of intake manifold ⇒ page 96 .

– Detach the solenoid valves for activated charcoal filter system -1- and -2- from bracket.

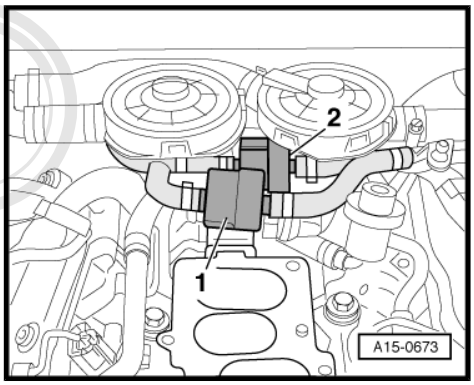

– Unplug electrical connectors on injectors by pressing release tab down and then inwards -arrow-.

Copyright by AUDI AG. Reproduction of this document or parts thereof in any form or by any means, in part or in whole, is not permitted unless authorised by AUDI AG. AUDI AG does not guarantee or accept any liability with respect to the correctness of information in this document. Copyright by AUDI AG.

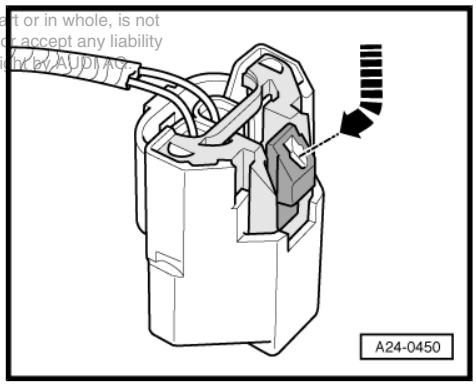

– Unscrew bolts for fuel rail -1-.
– Unbolt bottom section of intake manifold -2-.
– Remove bottom section of intake manifold together with fuel rail upwards; the fuel hoses remain connected.

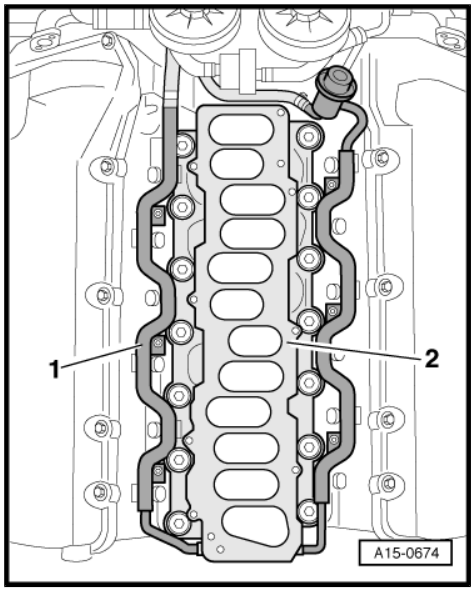

Note

Seal intake ports on cylinder heads with clean cloths.

2.5.1 Installing

Installation is carried out in the reverse order; note the following:

Note

Renew seals and gaskets.

– Press lugs of gasket for bottom section of intake manifold into holes on cylinder heads.
– Install bottom section of intake manifold together with fuel rail.
– Install top section of intake manifold ⇒ page 96 .

2.5.2 Tightening torques

Component	Nm
Bottom section of intake manifold to cylinder heads	8
Fuel rail to cylinder heads	8

Protected by copyright. Copying for private or commercial purposes, in part or in whole, is not permitted unless authorised by AUDI AG. AUDI AG does not guarantee or accept any liability with respect to the correctness of information in this document. Copyright by AUDI AG.

2.6 Checking compression

Special tools and workshop equipment required

- ♦ Spark plug socket -3122 B-
- ♦ Compression tester - V.A.G 1763-
- ♦ Puller -T10166-

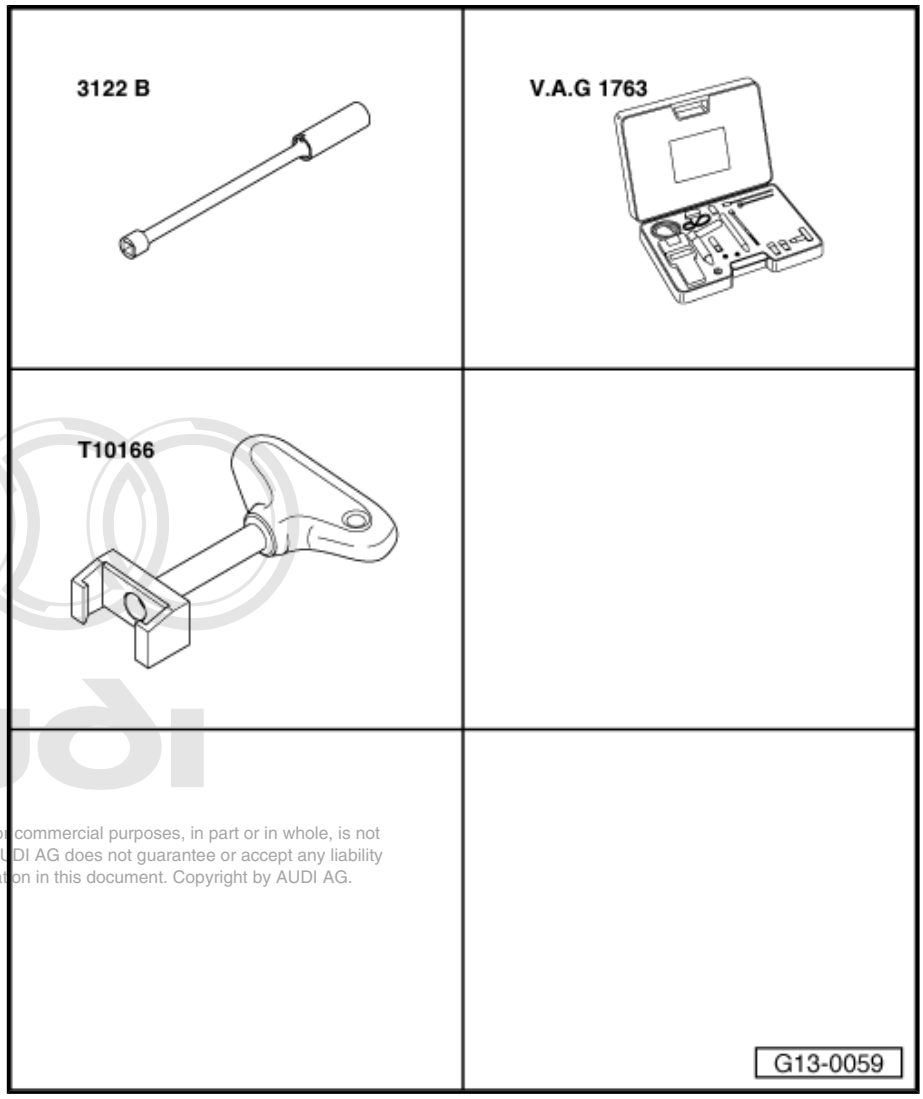

Protected by copyright. Copying for private or commercial purposes, in part or in whole, is not permitted unless authorised by AUDI AG. AUDI AG does not guarantee or accept any liability with respect to the correctness of information in this document. Copyright by AUDI AG.

2.6.1 Test requirements

- Engine oil temperature at least 30°C.
- Battery voltage at least 12.5 V

2.6.2 Test sequence

– Switch off ignition.

– Unscrew bolts -1- several turns.

– Unclip plenum chamber cover -2- (right-side) -arrows- and remove.

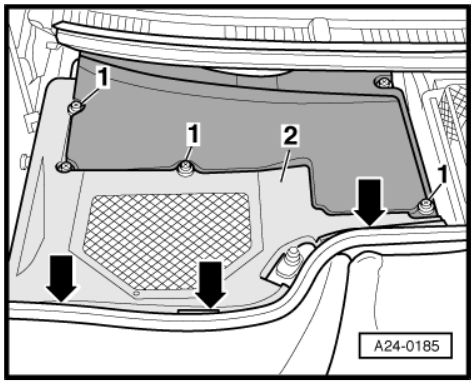

– Unscrew the cross-head screws -arrows-; for the rear left screw, pry off the cover for cowl panel trim -1-.

– Detach cover for electronics box (plenum chamber).

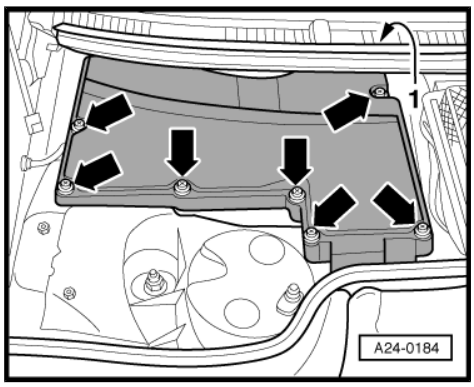

– Remove injector fuse -S116- at relay and fuse carrier in electronics box (plenum chamber), position -3-.

– Remove side sections of intake manifold: left-side ⇒ page 93 , right-side ⇒ page 95 .

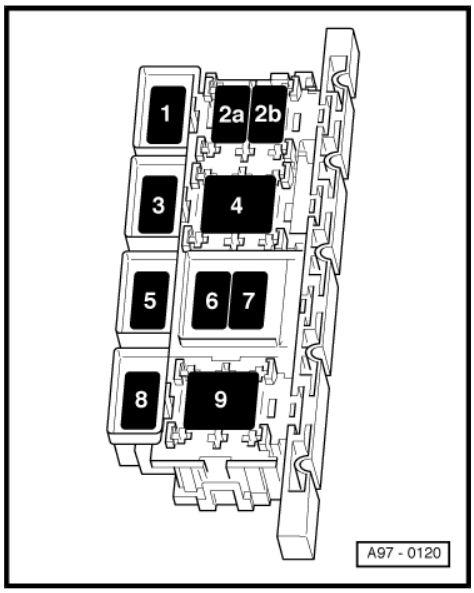

– Unplug electrical connectors -1- on ignition coils -2-.

Protected by copyright. Copying for private or commercial purposes, in part or in whole, is not permitted unless authorised by AUDI AG. AUDI AG does not guarantee or accept any liability with respect to the correctness of information in this document. Copyright by AUDI AG.

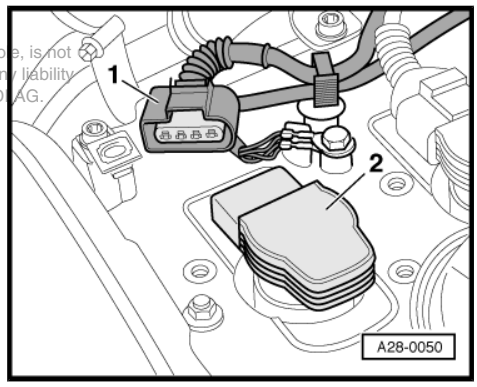

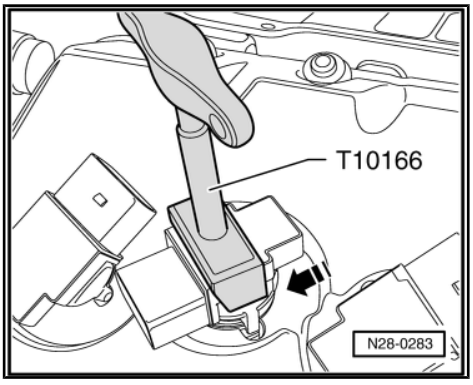

– Disconnect the ignition coils from the spark plugs using puller -T10166- .
– Remove spark plugs with spark plug spanner -3122 B- .
– Test the compression pressure with the compression tester -V.A.G 1763- .

Note

Using the compression tester ⇒ Operating instructions .

– Have a 2nd mechanic press down the accelerator pedal completely and simultaneously operate the starter until the pressure no longer increases on the tester display.

Compression pressure

New pressure in bar	Wear limit bar	Permissible difference between cylinders bar
11.0 … 13.0	10.0	max. 3.0

– Install spark plugs and ignition coils ⇒ Motronic injection and ignition system (12-cyl.); Rep. Gr. 28 .
– Install side sections of intake manifold: left-side ⇒ page 93 , right-side ⇒ page 95 .
– When finished, interrogate and erase the engine control unit fault memory, as faults are stored when the fuse is removed and connectors are detached ⇒ Vehicle diagnosis, testing and information system VAS 5051.

Protected by copyright. Copying for private or commercial purposes, in part or in whole, is not permitted unless authorised by AUDI AG. AUDI AG does not guarantee or accept any liability with respect to the correctness of information in this document. Copyright by AUDI AG.

3 Servicing valve gear

Note

- *The following illustration shows cylinder head on bank 1 (right-side).*
- *Engine is not to be started for approx. 30 minutes after installing camshafts. Hydraulic valve compensation elements have to settle (otherwise valves will strike pistons).*
- *After working on the valve gear, turn the engine carefully at least 2 rotations to ensure that none of the valves make contact when the starter is operated.*

WARNING

Protected by copyright. Copying for private or commercial purposes, in part or in whole, is not permitted unless authorised by AUDI AG. AUDI AG does not guarantee or accept any liability with respect to the correctness of information in this document. Copyright by AUDI AG.

The engine must not be turned when the timing chain cover (right-side) is removed. The installed chain tensioner (right-side) and timing chain cover (right-side) are what prevent the timing chain from slipping.

3.1 Camshafts - exploded view of components

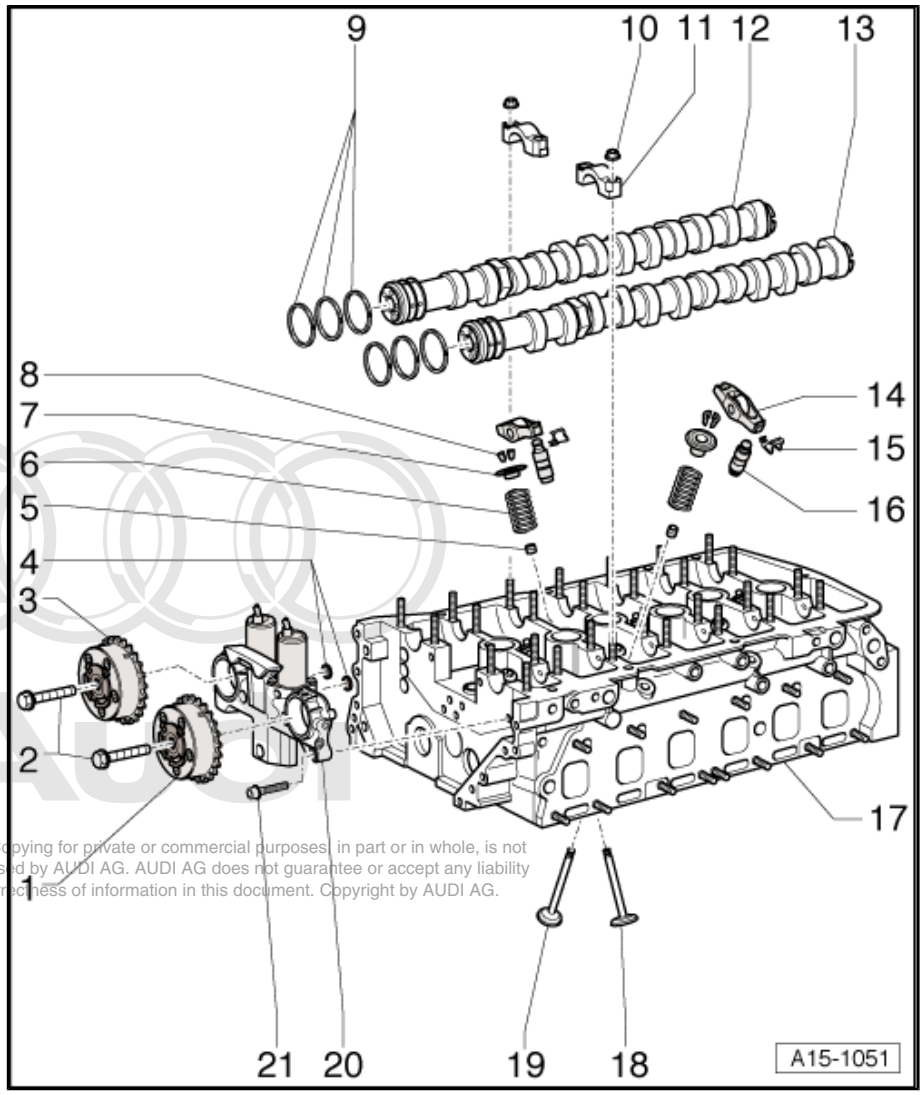

Protected by copyright. Copying for private or commercial purposes, in part or in whole, is not permitted unless authorised by AUDI AG. AUDI AG does not guarantee or accept any liability with respect to the correctness of information in this document. Copyright by AUDI AG.

1 - Camshaft adjuster (exhaust)

- ❑ For cylinder bank 1 (right-side), identification: B1 / A9
- ❑ For cylinder bank 2 (left-side), identification: B2 / A9
- ❑ Removing and installing: refer to Removing and installing camshaft adjuster ⇒ page 108

2 - 60 Nm + 90° ($^1/_4$ turn) further

- ❑ There must be no oil on the contact surfaces between camshaft adjuster and camshaft, as well as bolt head and camshaft adjuster.
- ❑ To loosen and tighten, counterhold with 32 mm open-end spanner on camshaft

3 - Camshaft adjuster (inlet)

- ❑ For cylinder bank 1 (right-side), identification: B1 / A1
- ❑ For cylinder bank 2 (left-side), identification: B2 / A2
- ❑ Removing and installing: refer to Removing and installing camshaft adjuster ⇒ page 108

4 - Strainer

- ❑ 2 x
- ❑ Clean

5 - Valve stem oil seal

- ❑ Renewing ⇒ page 118

6 - Valve springs

- ❑ Installation position: larger ∅ points downwards

7 - Valve spring plate

8 - Valve cotters

9 - Piston rings for camshaft adjuster

- ❑ Offset gaps by 120°
- ❑ Lubricate contact surfaces
- ❑ When inserting, do not spread rings to much

10 - 5 Nm +45° ($^1/_8$ turn) further

- ❑ Note tightening sequence ⇒ page 112 and ⇒ page 113

11 - Bearing cap

- ❑ Mark bearing caps 6 and 9
- ❑ Note fitting location and tightening sequence ⇒ page 112 and ⇒ page 113
- ❑ On bearing caps for axial bearings, thinly coat contact surface with lubricating paste ⇒ page 107

12 - Inlet camshaft

- ❑ Checking axial clearance ⇒ page 117
- ❑ Check radial clearance with Plastigage (roller rocker fingers removed)
- ❑ Wear limit (radial clearance): 0.1 mm
- ❑ Runout: max. 0.01 mm
- ❑ Removing and installing ⇒ page 108
- ❑ Identification ⇒ page 107 and ⇒ page 107

13 - Exhaust camshaft

- ❑ Checking axial clearance ⇒ page 117
- ❑ Check radial clearance with Plastigage (roller rocker fingers removed)
- ❑ Wear limit (radial clearance): 0.1 mm
- ❑ Runout: max. 0.01 mm
- ❑ Removing and installing ⇒ page 108
- ❑ Identification ⇒ page 107 and ⇒ page 107

Protected by copyright. Copying for private or commercial purposes, in part or in whole, is not permitted unless authorised by AUDI AG. AUDI AG does not guarantee or accept any liability with respect to the correctness of information in this document. Copyright by AUDI AG.

14 - Roller rocker finger

- ❑ Do not interchange
- ❑ Check roller bearings for ease of movement
- ❑ Lubricate contact surface
- ❑ Assembly: attach to supporting element using securing clip ⇒ Item 15 (page 106)

15 - Securing clip

- ❑ Check for firm attachment

16 - Supporting element

- ❑ With hydraulic valve clearance compensation
- ❑ Do not interchange
- ❑ Lubricate contact surface

17 - Cylinder head

- ❑ Checking valve guides ⇒ page 122

18 - Exhaust valve

- ❑ Mark installation position
- ❑ Must not be machined; only grinding-in is permissible
- ❑ Valve dimensions ⇒ page 108
- ❑ Checking valve guides ⇒ page 122
- ❑ Machining valve seats ⇒ page 122

19 - Inlet valve

- ❑ Mark installation position
- ❑ Must not be machined; only grinding-in is permissible
- ❑ Valve dimensions ⇒ page 108
- ❑ Checking valve guides ⇒ page 122
- ❑ Machining valve seats ⇒ page 122

20 - Valve timing housing

- ❑ Removing and installing ⇒ page 108
- ❑ When installing, lightly oil contact surfaces of piston rings

21 - 8 Nm

Camshaft identification, cylinder bank 1 (right-side)

A - Exhaust camshaft; identification 07C - index 104 J

B - Inlet camshaft; identification 07C - index 102 L

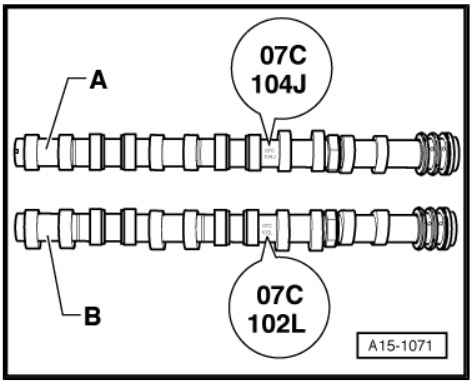

Camshaft identification, cylinder bank 2 (left-side)

A - Inlet camshaft; identification 07C - index 101 L

B - Exhaust camshaft; identification 07C - index 103 H

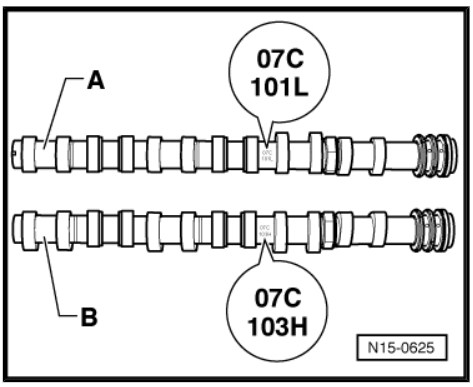

Identification for camshaft adjusters

The camshaft adjusters -arrows- are marked as follows:

- Inlet camshaft adjuster, cylinder bank 1 (right-side): B1 / A2
- Exhaust camshaft adjuster, cylinder bank 1 (right-side): B1 / A9
- Inlet camshaft adjuster, cylinder bank 2 (left-side): B2 / A2
- Exhaust camshaft adjuster, cylinder bank 2 (left-side): B2 / A9

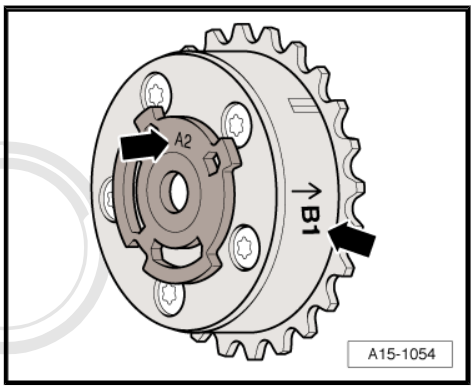

Coating contact surfaces of bearing caps for axial bearings with lubricating paste

– Thinly coat contact surfaces -hatched surface in illustration- of bearing caps 7, 8, 27 and 28 for axial bearings using lubricating paste -G 052 723 A2- ⇒ Parts catalogue .

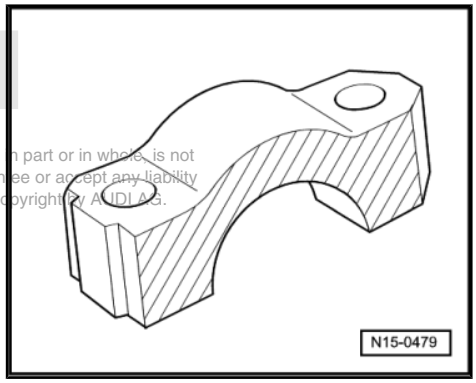

Protected by copyright. Copying for private or commercial purposes, in part or in whole, is not permitted unless authorised by AUDI AG. AUDI AG does not guarantee or accept any liability with respect to the correctness of information in this document. Copyright by AUDI AG.

Valve dimensions

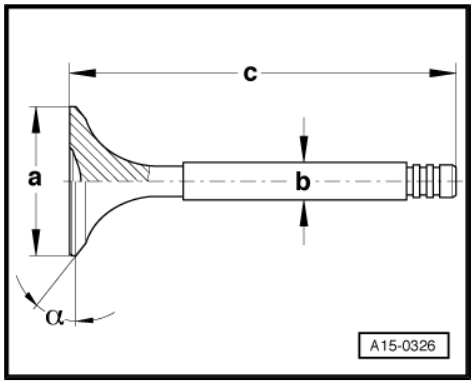

Note

Inlet and exhaust valves must not be machined. Only grinding-in is permitted.

Dimension		Short inlet valve	Long inlet valve	Short exhaust valve	Long exhaust valve
∅ a	mm	32.50	32.50	27.00	27.00
∅ b	mm	5.96	5.96	5.94	5.94
c	mm	102.20	136.10	102.50	136.40
α	∠°	45	45	45	45

WARNING

- *Care must be taken when disposing of old sodium-filled exhaust valves.*
- *The valves must be sawn in two with a metal saw between the centre of the stem and valve head. When doing so, the valves must not come into contact with water. After preparing the valves, throw a maximum of ten into a bucket of water. Then step away immediately, since a chemical reaction will occur in which the sodium filling burns.*
- *After performing these procedures the valves can be disposed of in the normal way.*

3.2 Removing and installing camshaft adjuster

3.2.1 Removing

Note

- *The camshafts and crankshaft must not be turned when the timing drive is disassembled.*
- *The camshaft plate -T10068- is only used for locking the camshafts at TDC. Use an 32 mm open-end spanner to counterhold on flats of camshaft.*

- Engine removed.
- Engine separated from gearbox.

– Remove camshaft timing chains ⇒ page 68.

Brought to you by Copyright. Copying for private or commercial purposes, in part or in whole, is not permitted unless authorised by AUDI AG. AUDI AG does not guarantee or accept any liability with respect to the correctness of information in this document. Copyright by AUDI AG.

– To loosen securing bolt for camshaft adjuster, counterhold on hexagon flats -arrow- of camshaft using a 32 mm open-end spanner.

– Remove camshaft adjuster.

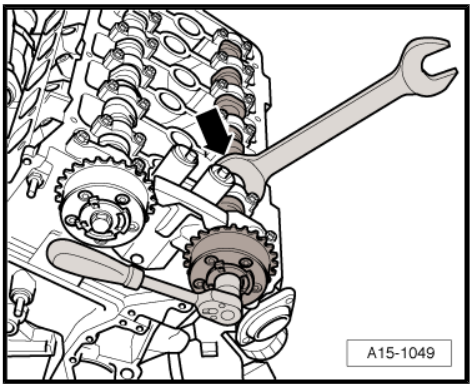

3.2.2 Installing

Note

- *There must be no oil on the contact surfaces between camshaft adjuster and camshaft, as well as bolt head and camshaft adjuster.*
- *Note the dowel pin in camshaft adjuster.*
- *Use new bolts for securing camshaft adjuster.*

– Note identification of camshaft adjusters -arrows- when installing.

- Inlet camshaft adjuster, cylinder bank 1 (right-side): B1 / A2
- Exhaust camshaft adjuster, cylinder bank 1 (right-side): B1 / A9
- Inlet camshaft adjuster, cylinder bank 2 (left-side): B2 / A2
- Exhaust camshaft adjuster, cylinder bank 2 (left-side): B2 / A9

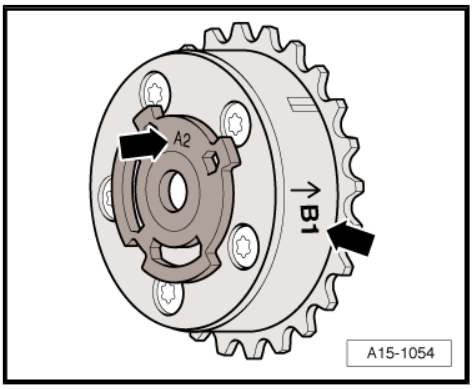

Note

The camshaft plate -T10068- is only used for locking the camshafts at TDC. Use an 32 mm open-end spanner to counterhold on flats of camshaft.

– To tighten securing bolt for camshaft adjuster, counterhold on hexagon flats -arrow- of camshaft using an open-end spanner.

– Install the camshaft timing chains ⇒ page 68 .

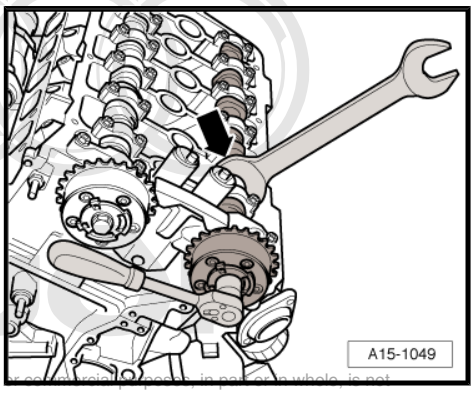

Protected by copyright. Copying for private or commercial purposes, in part or in whole, is not permitted unless authorised by AUDI AG. AUDI AG does not guarantee or accept any liability with respect to the correctness of information in this document. Copyright by AUDI AG.

3.2.3 Tightening torque

Component	Nm
Camshaft adjuster to camshaft	60 + 90° [20) 21)]

20) 90° equals a quarter of a turn.

21) Renew bolts.

3.3 Removing and installing housing for variable valve timing

3.3.1 Removing

Protected by copyright. Copying for private or commercial purposes, in part or in whole, is not permitted unless authorised by AUDI AG. AUDI AG does not guarantee or accept any liability with respect to the correctness of information in this document. Copyright by AUDI AG.

Note

- *The camshafts and crankshaft must not be turned when the timing drive is disassembled.*
- *The camshaft plate -T10068- is only used for locking the camshafts at TDC. Use an 32 mm open-end spanner to counterhold on flats of camshaft.*

- Engine removed.
- Engine separated from gearbox.

– Remove camshaft timing chains ⇒ page 68 .

– To loosen securing bolt for camshaft adjuster, counterhold on hexagon flats -arrow- of camshaft using a 32 mm open-end spanner.

– Remove camshaft adjuster.

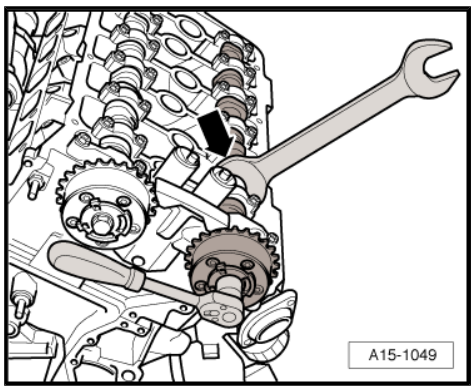

– Unscrew bolts -arrows- and remove housing for variable valve timing.

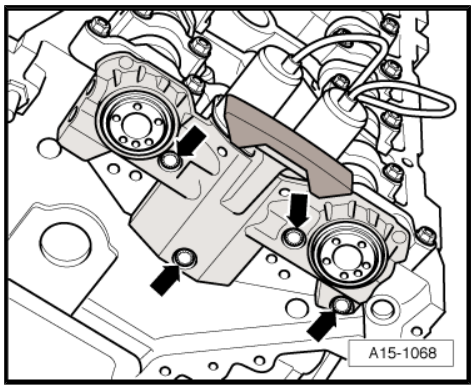

3.3.2 Installing

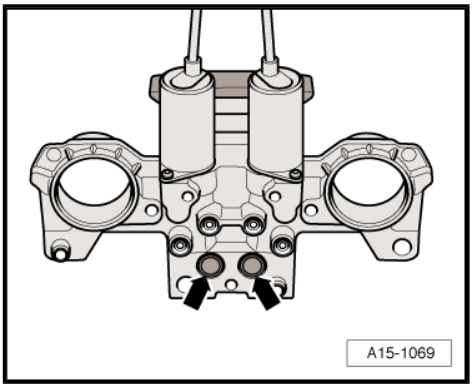

Installation is carried out in the reverse order; note the following:

– Clean the strainers -arrows- on reverse side of housing for variable valve timing.

– Thinly coat contact surfaces for piston rings in housing for variable valve timing.

Note

♦ *Make sure that the piston rings on camshafts do not become damaged when installing housing for variable valve timing.*

♦ *The ends of the piston rings must be offset by 120°.*

– Attach housing for variable valve timing onto camshafts.

– Tighten bolts -arrows- in diagonal sequence.

– Install camshaft adjusters ⇒ page 109 .

– Install the camshaft timing chains ⇒ page 68 .

Protected by copyright. Copying for private or commercial purposes, in part or in whole, is not permitted unless authorised by AUDI AG. AUDI AG does not guarantee or accept any liability with respect to the correctness of information in this document. Copyright by AUDI AG.

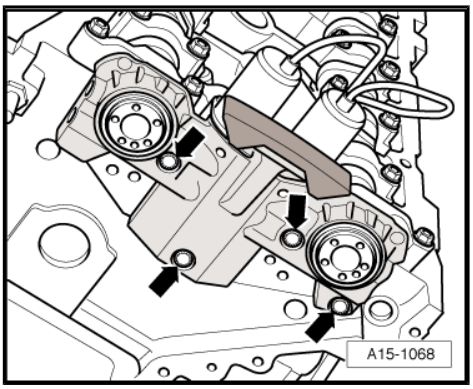

3.3.3 Tightening torque

Component	Nm
Housing for variable valve timing to cylinder head	8

3.4 Removing and installing camshafts

Special tools and workshop equipment required

♦ Locking pin -3242-

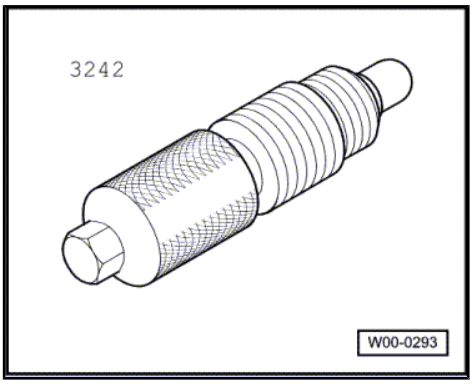

3.4.1 Removing

Note

- *The camshafts and crankshaft must not be turned when the timing drive is disassembled.*
- *The camshaft plate -T10068- is only used for locking the camshafts at TDC. Use an 32 mm open-end spanner to counterhold on flats of camshaft.*

- Engine removed.
- Engine separated from gearbox.

– Remove camshaft timing chains ⇒ page 68 .

– To loosen securing bolts for camshaft adjusters, counterhold on hexagon flats -arrow- of camshaft using a 32 mm open-end spanner.

– Remove camshaft adjuster.

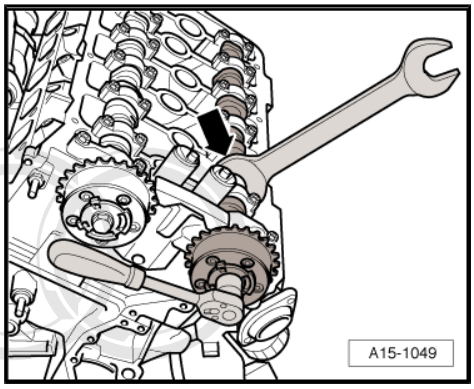

– Unscrew bolts -arrows- and remove housing for variable valve timing.

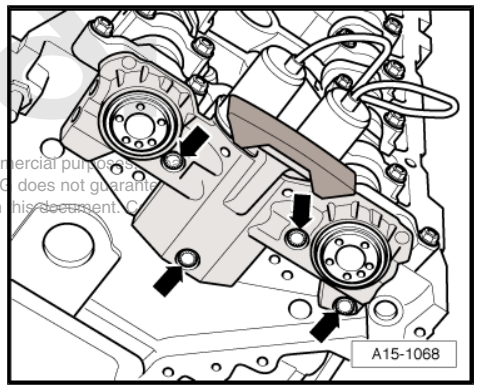

Protected by copyright. Copying for private or commercial purposes, in part or in whole, is not permitted unless authorised by AUDI AG. AUDI AG does not guarantee or assume liability with respect to the correctness of information in this document. Copyright by AUDI AG.

Cylinder bank 1 (right-side)

– Remove the inlet camshaft -A- as follows:

1 - Unbolt bearing caps 1 and 13.

2 - Unbolt bearing caps 5 and 9.

3 - Unbolt bearing cap 7.

4 - Loosen bearing caps 3 and 11 alternately in a diagonal sequence and remove.

– Remove the exhaust camshaft -B- as follows:

1 - Unbolt bearing caps 2 and 14.

2 - Unbolt bearing caps 6 and 10.

3 - Unbolt bearing cap 8.

4 - Loosen bearing caps 4 and 12 alternately in a diagonal sequence and remove.

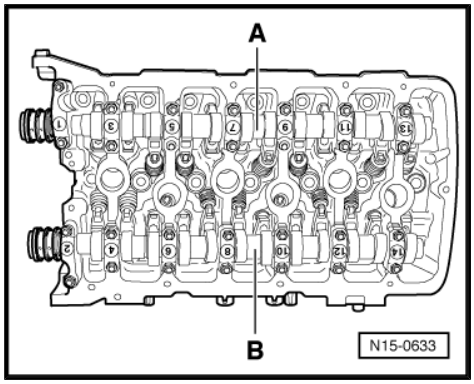

Cylinder bank 2 (left-side)

– Remove the inlet camshaft -A- as follows:

1 - Unbolt bearing caps 21 and 33.

2 - Unbolt bearing caps 25 and 29.

3 - Unbolt bearing cap 27.

4 - Loosen bearing caps 23 and 31 alternately in a diagonal sequence and remove.

– Remove the exhaust camshaft -B- as follows:

1 - Unbolt bearing caps 22 and 34.

2 - Unbolt bearing caps 26 and 30.

3 - Unbolt bearing cap 28.

4 - Loosen bearing caps 24 and 32 alternately in a diagonal sequence and remove.

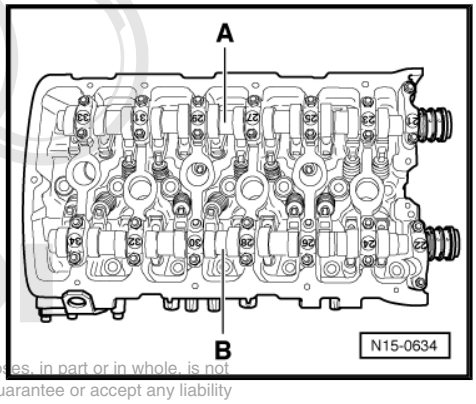

Protected by copyright. Copying for private or commercial purposes, in part or in whole, is not permitted unless authorised by AUDI AG. AUDI AG does not guarantee or accept any liability with respect to the correctness of information in this document. Copyright by AUDI AG.

Continued for both cylinder banks

– Carefully remove the camshafts and place them down on a clean surface.

Note

Ensure that the rocker fingers and the supporting elements are not interchanged.

– If necessary, remove roller rocker fingers together with supporting elements and place down on a clean surface.

3.4.2 Installing

• Crankshaft locked in TDC position with locking pin -3242- .

– Insert supporting elements together with roller rocker fingers into cylinder head.

– When installing roller rocker fingers, make sure that they make contact with valve stems.

– Lubricate running surfaces of the camshafts.

– Insert the respective camshaft in the camshaft bearings of cylinder head.

Camshaft identification, cylinder bank 1 (right-side)

A - Exhaust camshaft; identification 07C - index 104 J

B - Inlet camshaft; identification 07C - index 102 L

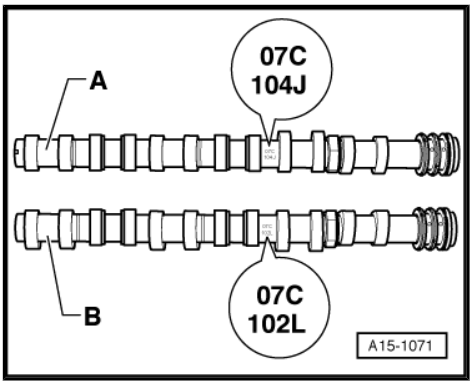

Camshaft identification, cylinder bank 2 (left-side)

A - Inlet camshaft; identification 07C - index 101 L

B - Exhaust camshaft; identification 07C - index 103 H

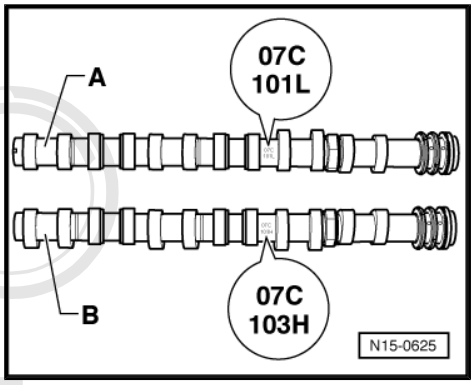

– Insert the camshafts into the cylinder head so that they are located at TDC.

• The slits -arrows- at front of the camshafts must be parallel to and at the same height as the top edge of cylinder head.

Protected by copyright. Copying for private or commercial purposes, in part or in whole, is not permitted unless authorised by AUDI AG. AUDI AG does not guarantee or accept any liability with respect to the correctness of information in this document. Copyright

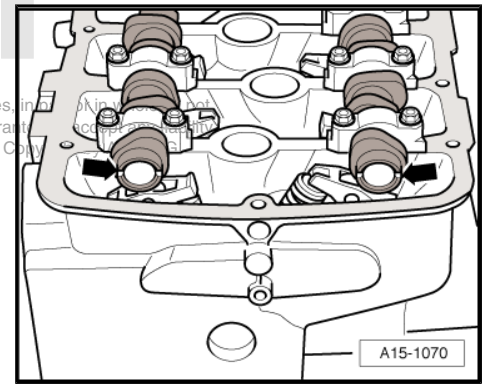

– Thinly coat contact surfaces -hatched surface in illustration- of bearing caps 7, 8, 27 and 28 for axial bearings using lubricating paste -G 052 723 A2- .

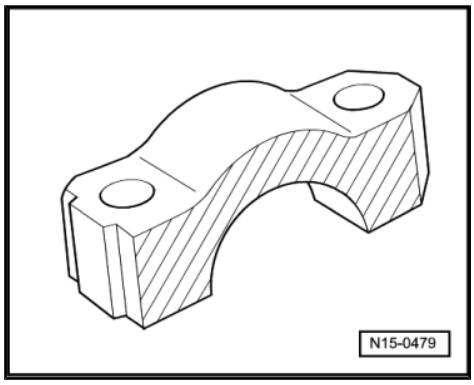

Cylinder bank 1 (right-side)

– Insert camshaft bearing caps according to their identification numbers:

• The pointed section -A- of the bearing caps for inlet and exhaust camshafts faces outwards.

• The identification markings for the bearing caps are legible from the inlet side.

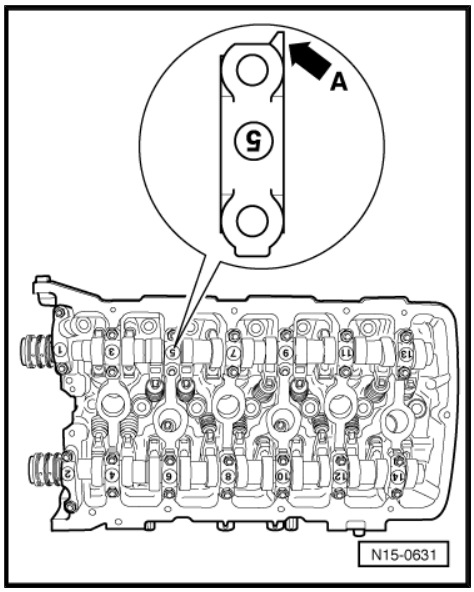

– Install the inlet camshaft -A- as follows:

1 - Tighten bearing caps 3 and 11 alternately in diagonal sequence and then tighten to final torque.

2 - Tighten bearing cap 7.

3 - Tighten bearing caps 5 and 9.

4 - Tighten bearing caps 1 and 13.

– Install the exhaust camshaft -B- as follows:

1 - Tighten bearing caps 4 and 12 alternately in diagonal sequence and then tighten to final torque.

2 - Tighten bearing cap 8.

3 - Tighten bearing caps 6 and 10.

4 - Tighten bearing caps 2 and 14.

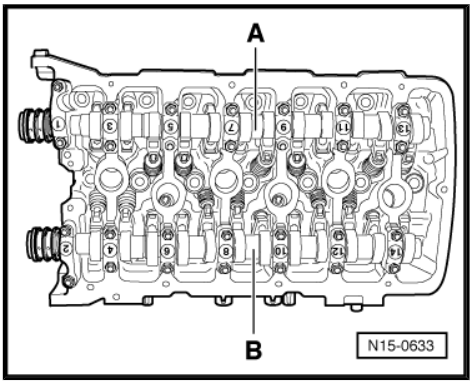

Cylinder bank 2 (left-side)

– Insert camshaft bearing caps according to their identification numbers:

• The pointed section -A- of the bearing caps for inlet and exhaust camshafts faces outwards.

• The identification markings for the bearing caps are legible from the inlet side.

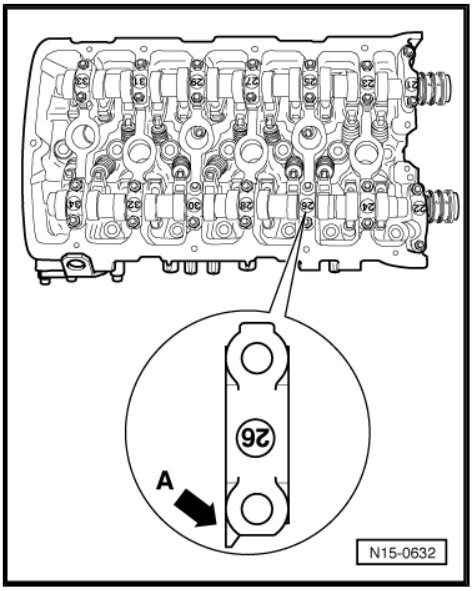

Protected by copyright. Copying for private or commercial purposes, in part or in whole, is not permitted unless authorised by AUDI AG. AUDI AG does not guarantee or accept any liability with respect to the correctness of information in this document. Copyright by AUDI AG.

– Install the inlet camshaft -A- as follows:

1 - Tighten bearing caps 23 and 31 alternately in diagonal sequence and then tighten to final torque.

2 - Tighten bearing cap 27.

3 - Tighten bearing caps 25 and 29.

4 - Tighten bearing caps 21 and 33.

– Install the exhaust camshaft -B- as follows:

1 - Tighten bearing caps 24 and 32 alternately in diagonal sequence and then tighten to final torque.

2 - Tighten bearing cap 28.

3 - Tighten bearing caps 26 and 30.

4 - Tighten bearing caps 22 and 34.

– Install the housing for variable valve timing ⇒ page 110 .

– Install camshaft adjusters ⇒ page 109 .

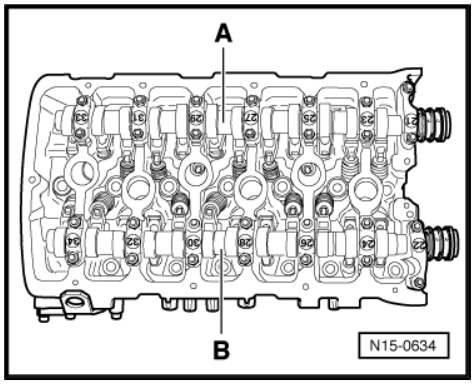

Caution

The camshafts and crankshaft must not be turned when the timing drive is disassembled.

– Before continuing assembly, check that the camshafts are in TDC position.

• You must be able to insert the camshaft plate -T10068- in both camshaft grooves.

– Install the camshaft timing chains ⇒ page 68 .

Protected by copyright. Copying for private or commercial purposes, in part or in w
permitted unless authorised by AUDI AG. AUDI AG does not guarantee or accep
with respect to the correctness of information in this document. Copyright by AUDI AG.

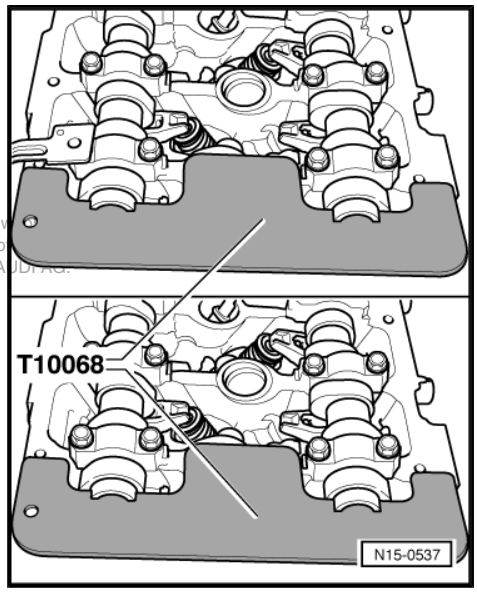

3.4.3 Tightening torque

Component	Nm
Bearing cap to cylinder head	5 + 45° 22)

22) 45° equals 1/8 of a turn.

3.5 Checking axial clearance of camshafts

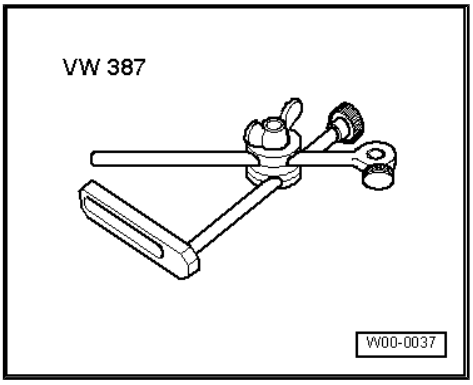

Special tools and workshop equipment required

- Universal dial gauge bracket -VW 387-
- Dial gauge

3.5.1 Test sequence

– Perform measurement with roller rocker fingers and supporting elements removed. Axial bearing cap for appropriate camshaft remains attached.

– Secure universal dial gauge bracket -VW 387- with dial gauge to cylinder head.

– Determine axial clearance.

• Wear limit (axial clearance): 0.10 mm.

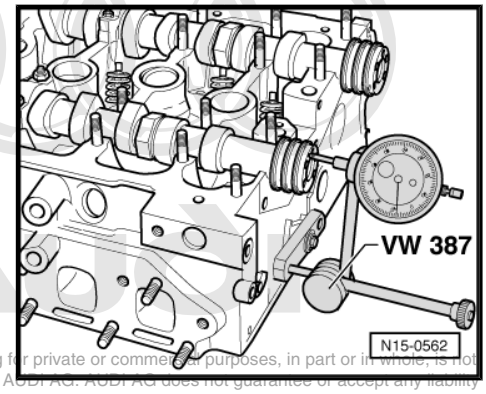

Protected by copyright. Copying for private or commercial purposes, in part or in whole, is not permitted unless authorised by AUDI AG. AUDI AG does not guarantee or accept any liability with respect to the correctness of information in this document. Copyright by AUDI AG.

3.6 Renewing valve stem oil seals

Special tools and workshop equipment required

- Spark plug socket and extension -3122 B-
- Valve stem seal puller -3364-
- Valve stem seal fitting tool -3365-
- Assembly and removal device for valve cotters -VAS 5161- with guide plate -VAS 5161/25-
- Adapter -T40012-

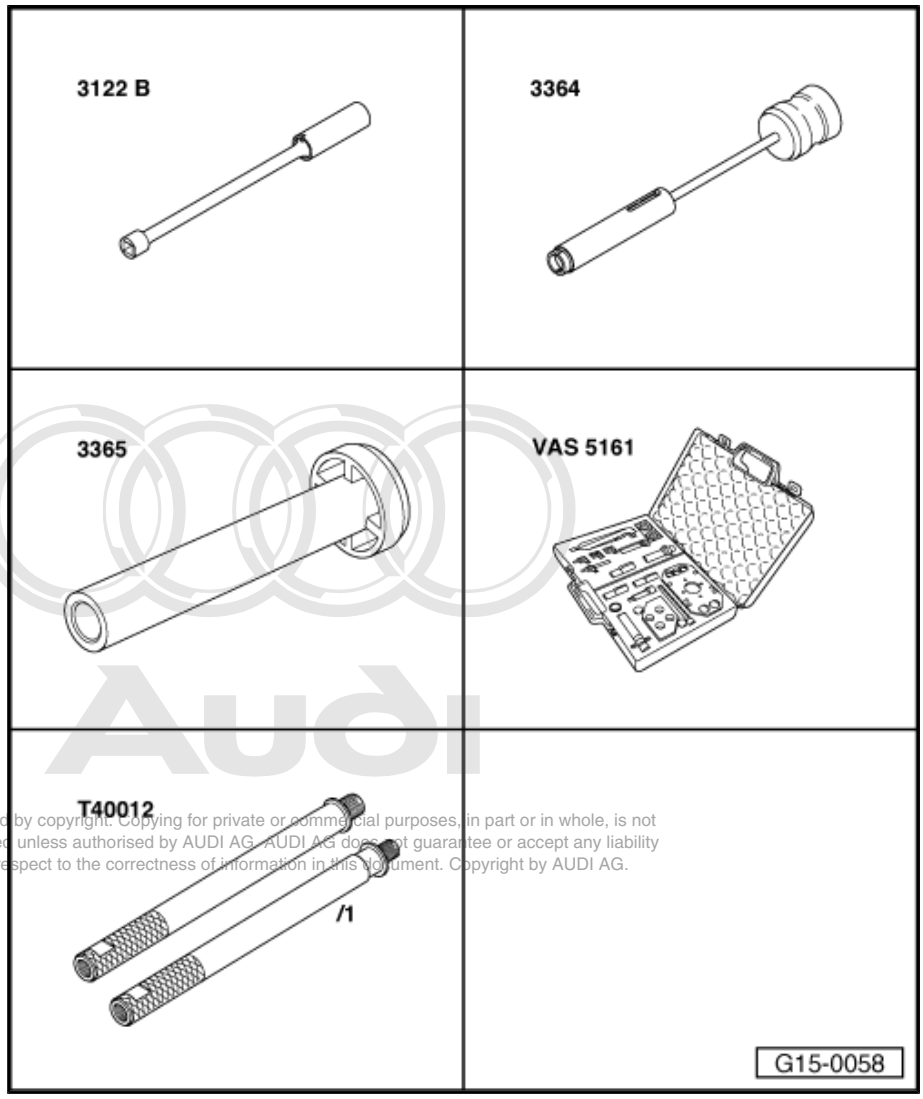

Protected by copyright. Copying for private or commercial purposes, in part or in whole, is not permitted unless authorised by AUDI AG. AUDI AG does not guarantee or accept any liability with respect to the correctness of information in this document. Copyright by AUDI AG.

3.6.1 Procedure

- Engine removed.

– Remove camshafts ⇒ page 111 .

– Remove spark plugs with spark plug socket -3122 B- .

– Apply drift -VAS 5161/3- to valve spring plate and knock valve cotters loose using a plastic hammer.

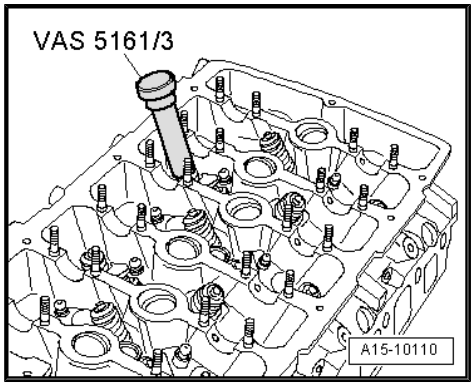

– Fit guide plate -VAS 5161/25- from assembly and removal device for valve cotters -VAS 5161- on cylinder head.
– Secure guide plate with one nut.
– Screw adapter -T40012- with seal hand-tight into the corresponding spark plug thread and apply a steady pressure.
• Air pressure: at least 6 bar

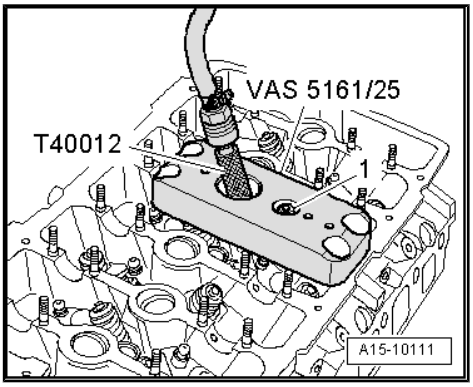

Procedure for outer rows of valves:

– Screw snap-in device -VAS 5161/6- with engaging fork -VAS 5161/5- into guide plate.
– Insert assembly cartridge -VAS 5161/8- into guide plate.
– Attach pressure fork -VAS 5161/2- to snap-in device and push assembly cartridge down.
– At the same time, turn knurled screw of assembly cartridge clockwise until ends engage in valve cotters.
– Move knurled screw back and forth slightly; the valve cotters are thus forced apart and taken up by the assembly cartridge.
– Release the pressure fork.
– Remove assembly cartridge.
– Unbolt guide plate and move to side.
• The compressed air hose remains connected.
– Remove valve spring with valve spring plate.

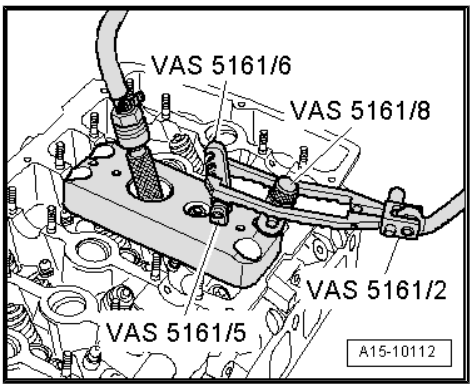

Procedure for inner rows of valves:

– Screw snap-in device -VAS 5161/6- with engaging fork -VAS 5161/5- onto cylinder head.
– Slide knurled spacer ring -VAS 5161/17- onto assembly cartridge -VAS 5161/8- .
– Insert assembly cartridge into guide plate.
– Attach pressure fork -VAS 5161/2- to snap-in device and push assembly cartridge down.
– At the same time, turn knurled screw of assembly cartridge clockwise until ends engage in valve cotters.
– Move knurled screw back and forth slightly; the valve cotters are thus forced apart and taken up by the assembly cartridge.
– Release the pressure fork.
– Remove assembly cartridge.
– Unbolt guide plate and move to side.
• The compressed air hose remains connected.
– Remove valve spring with valve spring plate.

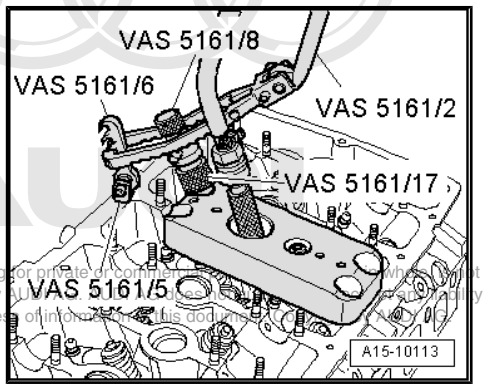

Protected by copyright. Copying for private or commercial purposes, in whole or in part, is not permitted unless authorised by AUDI AG. AUDI AG does not guarantee or assume any liability with respect to the correctness of information in this document.

All valves (continued):

– Remove valve stem oil seals using the valve stem seal puller -3364- .

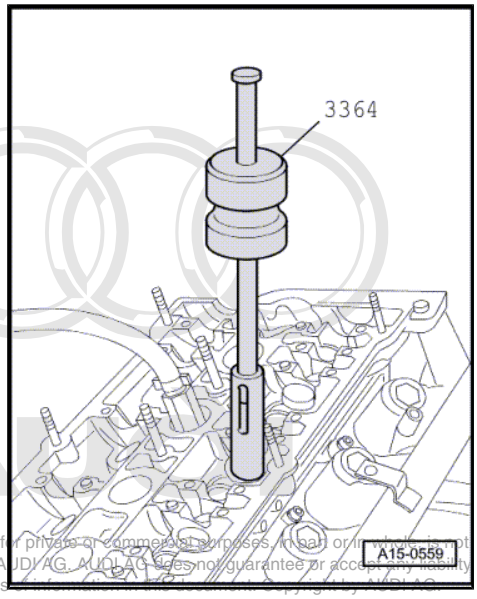

Protected by copyright. Copying for private or commercial purposes, in part or in whole, is not permitted unless authorised by AUDI AG. AUDI AG does not guarantee or accept any liability with respect to the correctness of information in this document. Copyright by AUDI AG.

Note

- *To press on the green coloured valve stem seals from the current product range, the press tool for valve stem oil seal -3365- must be drilled out to ∅ 10.5 mm.*
- *Mark the drilled-out press tool so it can be used again later.*
- *A plastic sleeve -A- is included with the new valve stem oil seals.*

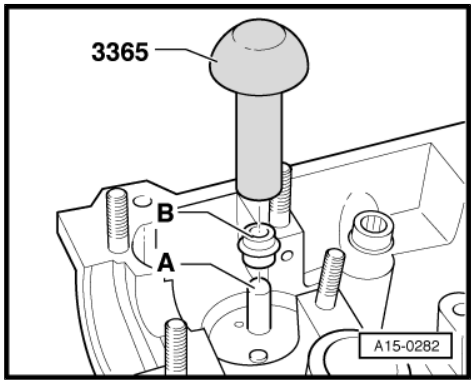

– Insert plastic sleeve -A- onto the valve stem to prevent damage to the new valve stem oil seal -B-.

– Lightly lubricate sealing lip of valve stem oil seal.

– Slip valve stem oil seal over plastic sleeve.

– Carefully press the valve stem oil seal onto valve guide using fitting tool -3365- .

– Remove the plastic sleeve.

If valve cotters have been removed from assembly cartridge, they need to be put into insertion device -VAS 5161/18- first.

• Larger diameter of valve cotters faces upwards.

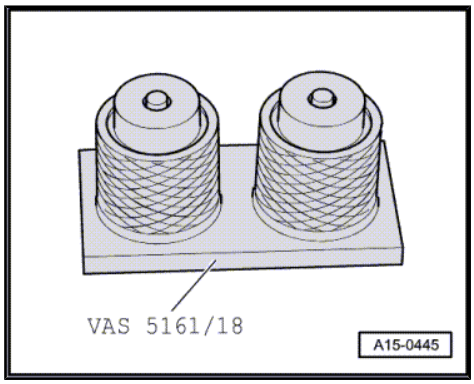

– Install valve spring and valve spring plate.

Position of valve spring:

- The larger diameter -arrow- faces the cylinder head.

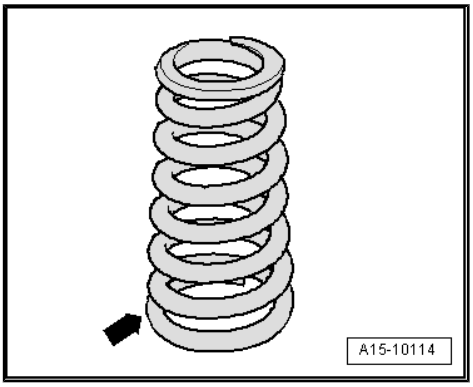

Procedure for outer rows of valves:

– Bolt guide plate onto cylinder head again, as shown in the illustration.

– Insert assembly cartridge into guide plate.

– Push pressure fork down and pull knurled screw upwards while turning to left and right - this will insert the valve cotters.

– Release the pressure fork with knurled screw still in pulled position.

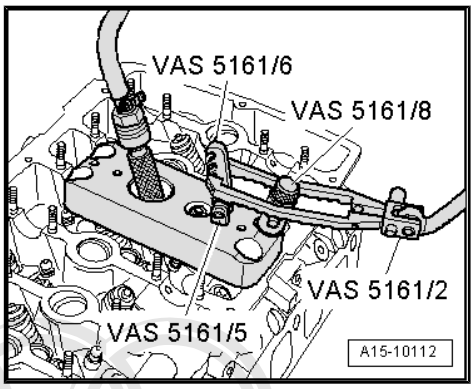

Procedure for inner rows of valves:

– Insert assembly cartridge with knurled spacer ring into guide plate.

– Push pressure fork down and pull knurled screw upwards while turning to left and right - this will insert the valve cotters.

– Release the pressure fork with knurled screw still in pulled position.

– Install camshafts ⇒ page 113 .

– Install spark plugs ⇒ Motronic injection and ignition system (12-cyl.); Rep. Gr. 28 .

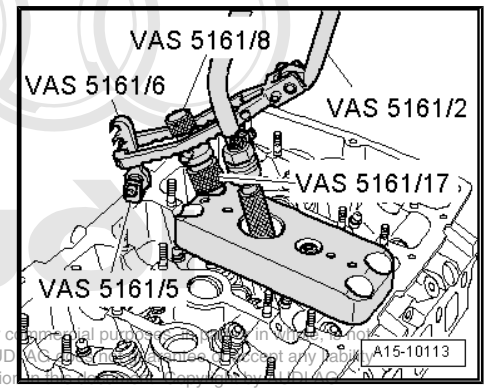

Protected by copyright. Copying for private or commercial purposes, in part or in whole, is not permitted unless authorised by AUDI AG. AUDI AG does not guarantee or accept any liability with respect to the correctness of information in this document. Copyright by AUDI AG.

Note

- *After installing camshafts wait for approx. 30 minutes before starting engine. Hydraulic valve compensation elements have to settle (otherwise valves will strike pistons).*
- *After working on the valve gear, turn the engine carefully at least 2 rotations to ensure that none of the valves make contact when the starter is operated.*

3.7 Checking valve guides

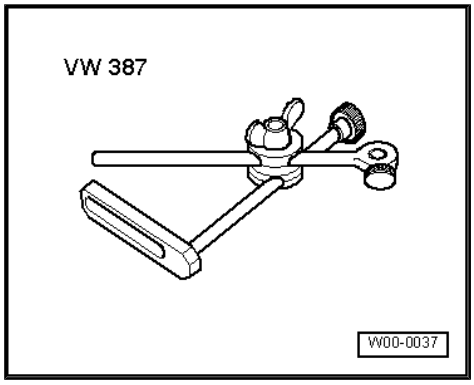

Special tools and workshop equipment required

- Universal dial gauge bracket -VW 387-
- Dial gauge

3.7.1 Test sequence

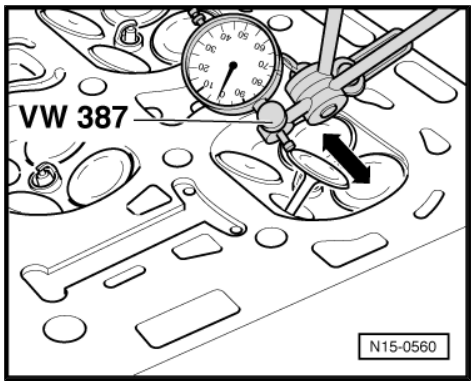

– Insert valve into valve guide. Only insert inlet valve into inlet guide and exhaust valve into exhaust guide, as the stem diameters are different.

• End of valve stem must be flush with valve guide.

– Determine amount of sideways play.

• Wear limit (sideways play): 0.8 mm.

If wear limit is exceeded:

– Renew the cylinder head.

3.8 Machining valve seats

Note

If a good seating pattern cannot be obtained by grinding the valve seats (lapping), they must be refaced (machined):

Special tools and workshop equipment required

- Depth gauge
- Valve seat machining tool

Note

- *When servicing engines with leaking valves, it is not sufficient to machine (reface) the valve seats and renew the valves. The valve guides must also be checked for wear. This is particularly important on high-mileage engines* *⇒ page 122* *.*
- *Valve seats should only be machined to the extent required to give a proper seating pattern.*
- *The maximum permissible machining dimension must be calculated before starting work.*
- *If the machining dimension is exceeded, the function of the hydraulic valve play compensation can no longer be guaranteed and the cylinder head must be renewed.*

Reproduction of this document or any part thereof for commercial purposes, in part or in whole, is not permitted unless authorised by AUDI AG. AUDI AG does not guarantee or accept any liability with respect to the correctness of information in this document. Copyright by AUDI AG.

3.8.1 Calculating maximum permissible machining dimension

– Insert valve and press firmly against valve seat.

Note

If the valve has to be renewed as part of a repair, use a new valve for the measurement.

– Measure distance -a- between end of valve stem and upper cylinder head surface with a depth gauge.

– Calculate the maximum permissible machining dimension using the measured distance and the minimum dimension.

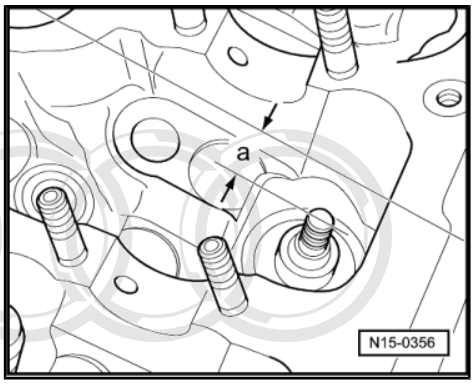

Minimum dimensions			
Short inlet valve	Long inlet valve	Short exhaust valve	Long exhaust valve
31.9 mm	10.4 mm	31.9 mm	10.4 mm

Measured distance minus minimum dimension = max. permissible machining dimension.

Example for long inlet valve:	
Measured distance	10.8 mm
- Minimum dimension	– 10.4 mm
= Maximum permissible machining dimension	= 0.4 mm

Protected by copyright. Copying for private or commercial purposes, in part or in whole, is not permitted unless authorised by AUDI AG. AUDI AG does not guarantee or accept any liability with respect to the correctness of information in this document. Copyright by AUDI AG.

Note

If the maximum permissible machining dimension is 0 mm or less than 0 mm, repeat the measurement with a new valve. If the measured result is again 0 mm or less than 0 mm, renew the cylinder head.

3.8.2 Machining inlet valve seat

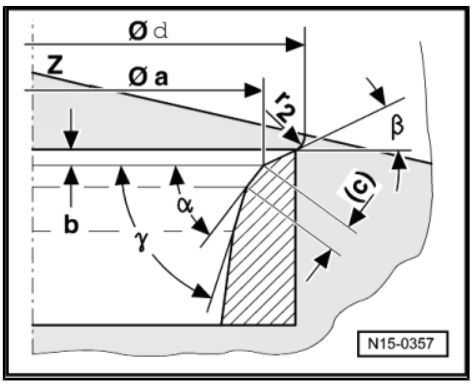

Inlet valve seat	
a	= ∅ 32.6 mm
b	= Maximum permissible machining dimension
c	= 0.9 ... 1.5 mm
d	= max. ∅ 35.0 mm
r_2	= Radius 2.0 mm
Z	= Bottom surface of cylinder head
α	= 45° valve seat angle
β	= 30° upper correction angle
γ	= 60° lower correction angle

Note

Calculating maximum permissible machining dimension
⇒ page 123 .

3.8.3 Machining exhaust valve seat

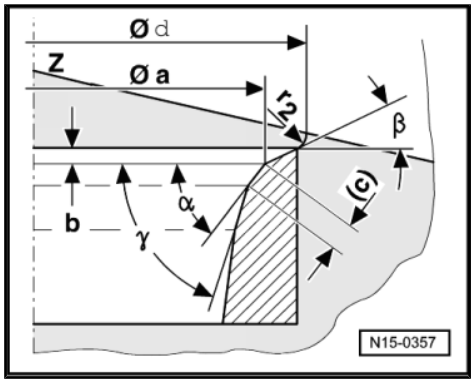

Exhaust valve seat	
a	= ∅ 26.7 mm
b	= Maximum permissible machining dimension
c	= 1.2 ... 1.7 mm
d	= max. ∅ 29.0 mm
r_2	= Radius 2.0 mm
Z	= Bottom surface of cylinder head
α	= 45° valve seat angle
β	= 30° upper correction angle
γ	= 60° lower correction angle

Note

Calculating maximum permissible machining dimension
⇒ page 123 .

3.9 Checking valves

– Visually inspect for scoring on stem and surface of seat.
– Renew valves with significant score marks.

Protected by copyright. Copying for private or commercial purposes, in part or in whole, is not permitted unless authorised by AUDI AG. AUDI AG does not guarantee or accept any liability with respect to the correctness of information in this document. Copyright by AUDI AG.

17 – Lubrication

1 Removing and installing parts of the lubrication system

Note

- *If large quantities of metal shavings or particles are found in the engine oil when repairing the engine, the oil passages must be cleaned carefully, and the oil cooler renewed in order to prevent further damage occurring later.*
- *The oil level must not be above MAX mark on dipstick - danger of damage to catalytic converter.*

Viscosity grades and oil specifications ⇒ Maintenance ; Booklet 403 .

Oil capacities ⇒ Maintenance tables

1.1 Sump (bottom section) - exploded view of components

1 - Oil filter housing
- ❑ Before loosening, unscrew oil drain plug ⇒ Item 35 (page 127) and drain oil
- ❑ Loosen and tighten with 36 mm socket

2 - O-ring
- ❑ Renew

3 - Oil filter element
- ❑ Pull off of oil filter housing ⇒ Item 1 (page 125)
- ❑ Renew O-ring ⇒ Item 2 (page 125) when changing filter
- ❑ Observe change intervals ⇒ Maintenance ; Booklet 403

4 - 9 Nm

5 - Bush
- ❑ Inserted in top section of sump

6 - Oil filter bracket
- ❑ With filter bypass valve
- ❑ Removing and installing ⇒ page 129

7 - 40 Nm

8 - Seal
- ❑ Renew

9 - Oil-pressure switch - F1- , 1.4 bar
- ❑ Tighten to 25 Nm

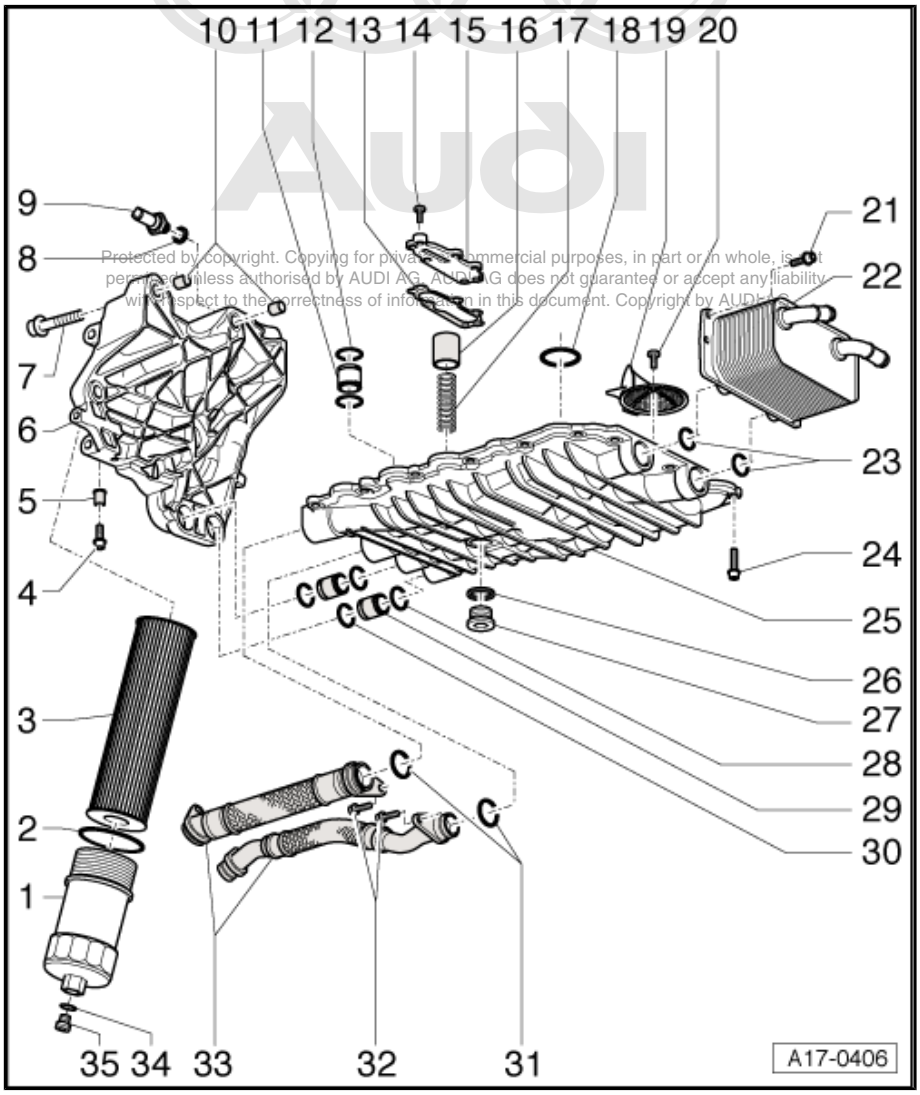

Protected by copyright. Copying for private or commercial purposes, in part or in whole, is not permitted unless authorised by AUDI AG. AUDI AG does not guarantee or accept any liability with respect to the correctness of information in this document. Copyright by AUDI AG.

- ❑ Black insulation
- ❑ Removing, installing and checking ⇒ page 144

10 - Dowel sleeve
- ❑ 2 x

11 - Intermediate pipe
- ❑ 5 x
- ❑ Different diameters

12 - O-rings
- ❑ 10 x
- ❑ Different diameters
- ❑ Renew

13 - Gasket
- ❑ Renew

14 - 9 Nm
- ❑ Install using locking fluid; locking fluid ⇒ Parts List

15 - Cover

16 - Piston

17 - Spring

18 - O-ring
- ❑ Renew

19 - Oil strainer
- ❑ 2 x

20 - 9 Nm
- ❑ Install using locking fluid; locking fluid ⇒ Parts List

21 - 9 Nm

22 - Oil cooler
- ❑ With bypass valve
- ❑ Removing and installing ⇒ page 127

23 - O-rings
- ❑ Renew

24 - 9 Nm
- ❑ Tighten in stages and in diagonal sequence

25 - Sump (bottom section)
- ❑ Removing and installing ⇒ page 130

26 - Seal
- ❑ Renew

27 - Oil drain plug -55 Nm-

28 - O-ring
- ❑ Renew

29 - Intermediate pipe
- ❑ 2 x

30 - O-ring
- ❑ Renew

31 - O-rings
- ❑ Renew

Protected by copyright. Copying for private or commercial purposes, in part or in whole, is not permitted unless authorised by AUDI AG. AUDI AG does not guarantee or accept any liability with respect to the correctness of information in this document. Copyright by AUDI AG.

32 - 8 Nm

33 - Connecting pipes
- ❑ Sump/oil reservoir

34 - O-ring
- ❑ Renew

35 - Oil drain plug -10 Nm-

1.2 Removing and installing oil cooler

Special tools and workshop equipment required

- ♦ Drip tray -V.A.G 1306-

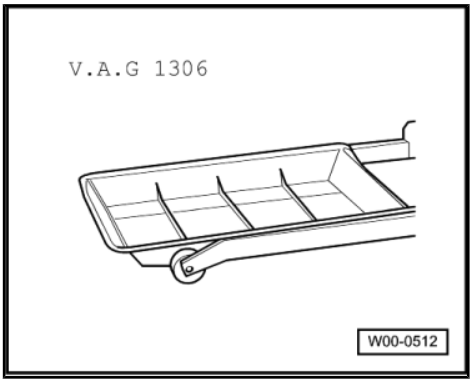

- ♦ Drip tray

1.2.1 Removing

> ⚠ WARNING
>
> *Hot steam/hot coolant may escape when opening expansion tank; cover filler cap with cloth and open carefully.*

– Open filler cap on coolant expansion tank.

– Vehicles with auxiliary heater: remove bolts -arrows- securing exhaust pipe for auxiliary/additional heater to noise insulation.

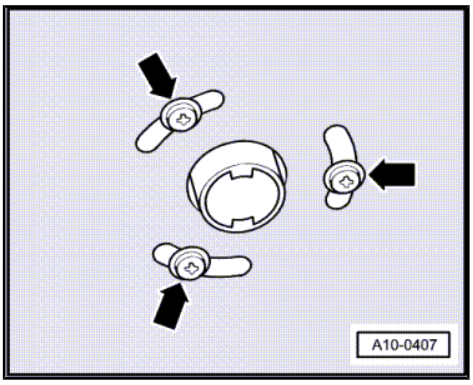

Protected by copyright. Copying for private or commercial purposes, in part or in whole, is not permitted unless authorised by AUDI AG. AUDI AG does not guarantee or accept any liability with respect to the correctness of information in this document. Copyright by AUDI AG.

– Loosen quick release fasteners -1- and remove noise insulation.

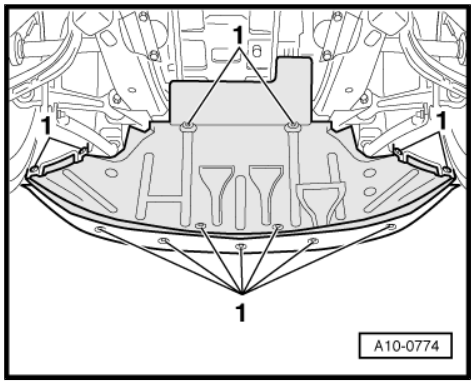

– Place drip tray underneath.
– Unscrew oil drain plugs -1- and -2-.

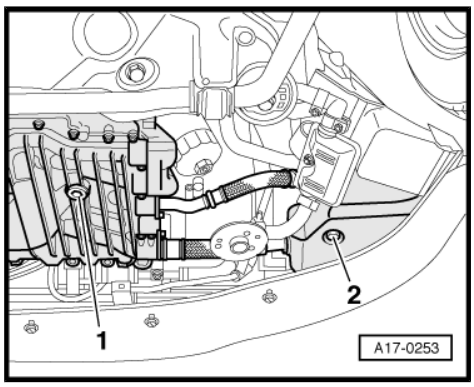

– Place drip tray -V.A.G 1306- under engine.
– Detach coolant hoses -1- and -2- from oil cooler and drain off coolant.

Protected by copyright. Copying for private or commercial purposes, in part or in whole, is not permitted unless authorised by AUDI AG. AUDI AG does not guarantee or accept any liability with respect to the correctness of information in this document. Copyright by AUDI AG.

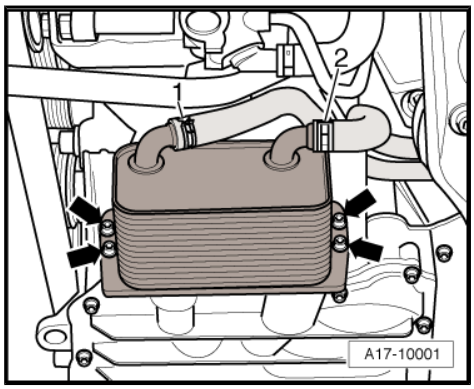

Note

The coolant must be drained off completely if the oil cooler is renewed.

– Unscrew bolts -arrows- and remove oil cooler from bottom section of sump.

1.2.2 Installing

Installation is carried out in the reverse order; note the following:

Note

Renew seals and O-ring.

– Topping up engine oil after repairs ⇒ page 143 .
– Fill cooling system ⇒ page 152 .

1.2.3 Tightening torque

Component	Nm
Oil cooler to sump (top section)	9

1.3 Removing and installing oil filter bracket

1.3.1 Removing

- Engine removed.

– Unscrew wire -1- at alternator.
– Detach electrical connector -3-.
– Mark the installation position of coolant hoses.
– Detach coolant hoses -2- at alternator.

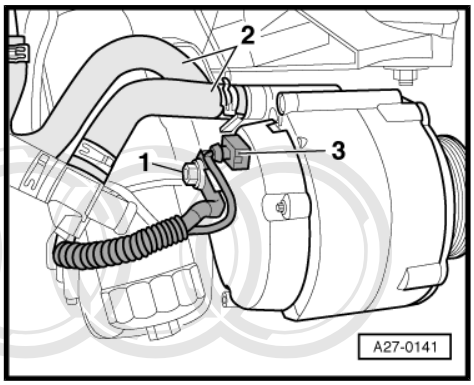

– Unscrew bolts -arrows- and remove alternator.

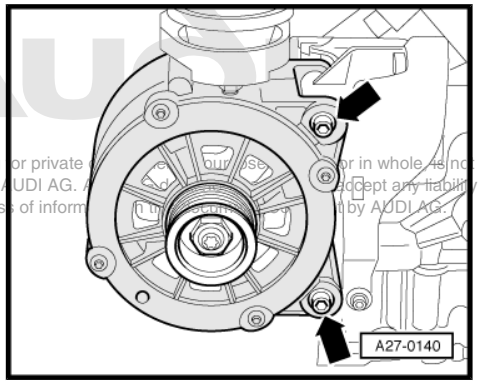

Protected by copyright. Copying for private or commercial purposes, in part or in whole is not permitted unless authorised by AUDI AG. AUDI AG does not guarantee or accept any liability with respect to the correctness of information in this document. Copyright by AUDI AG.

– Detach connecting pipes (to oil reservoir) at engine -arrows-.

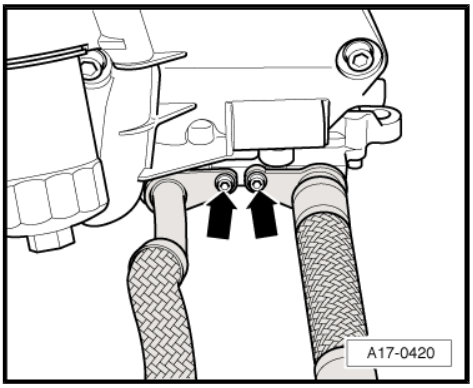

– Remove oil filter housing -2- and take out oil filter element.
– Unplug electrical connector -1- at oil pressure switch and move electrical wire clear.

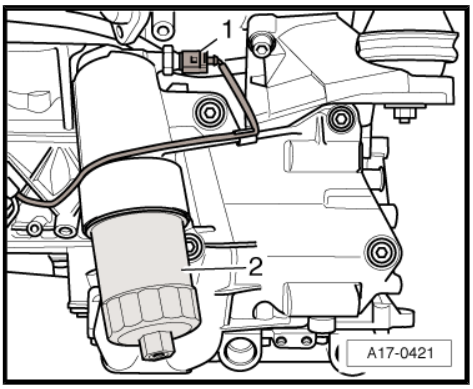

Note

Place a cloth underneath to catch any escaping oil.

– Unscrew bolts -1 ... 5- and remove oil filter bracket.

– Pull intermediate pipes ⇒ Item 29 (page 126) out of bottom section of sump.

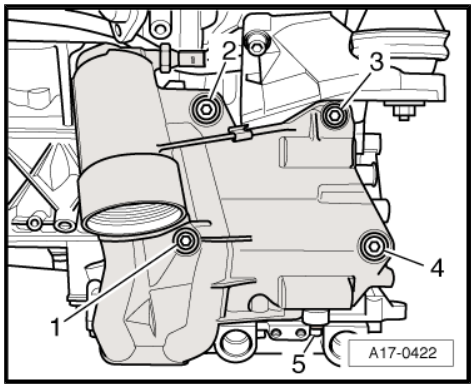

1.3.2 Installing

Installation is carried out in the reverse order; note the following:

Note

Renew O-rings.

– Check whether the bush -arrow- is inserted in hole in bottom section of sump.

• Installation position: the collar on bush faces upwards.

Protected by copyright. Copying for private or commercial purposes, in part or in whole, is not permitted unless authorised by AUDI AG. AUDI AG does not guarantee or accept any liability with respect to the correctness of information in this document. Copyright by AUDI AG.

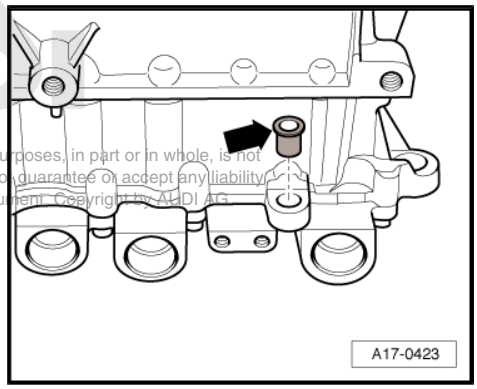

1.3.3 Tightening torques

Component		Nm
Connecting pipe to sump (bottom section)		8
Oil filter bracket	M 6	9
to engine	M 10	40
Oil filter housing to oil filter bracket		25
Alternator to oil filter bracket		20
Positive wire to alternator		16

1.4 Removing and installing sump (bottom section)

Special tools and workshop equipment required

♦ Electric drill with plastic brush attachment

♦ Safety goggles

♦ Sealant ⇒ Parts catalogue

1.4.1 Removing

- Engine removed.

– Unscrew wire -1- at alternator.
– Detach electrical connector -3-.
– Mark the installation position of coolant hoses.
– Detach coolant hoses -2- at alternator.

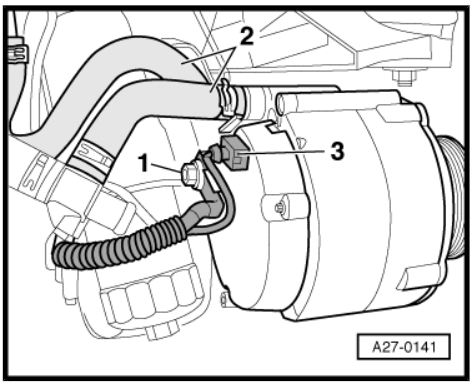

– Unscrew bolts -arrows- and remove alternator.

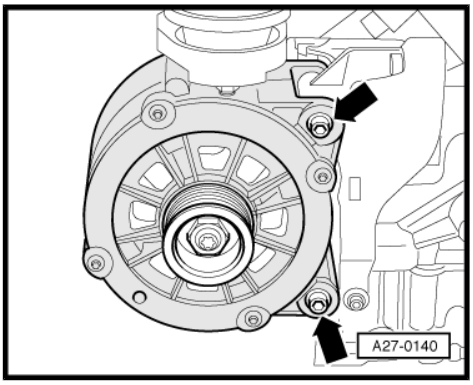

– Detach connecting pipes (to oil reservoir) at engine -arrows-.

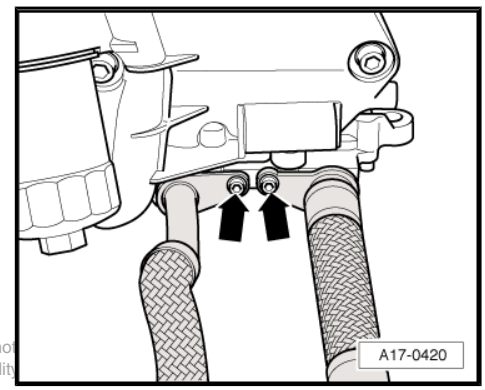

Protected by copyright. Copying for private or commercial purposes, in part or in whole, is not permitted unless authorised by AUDI AG. AUDI AG does not guarantee or accept any liability with respect to the correctness of information in this document. Copyright by AUDI AG.

– Remove oil filter housing -2- and take out oil filter element.
– Unplug electrical connector -1- at oil pressure switch and move electrical wire clear.

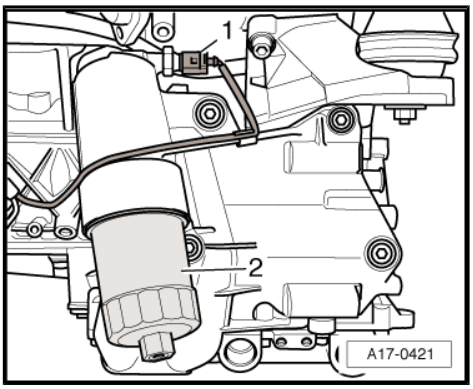

Note

Place a cloth underneath to catch any escaping oil.

– Unscrew bolts -1 ... 5- and remove oil filter bracket.

– Pull intermediate pipes ⇒ Item 29 (page 126) out of bottom section of sump.

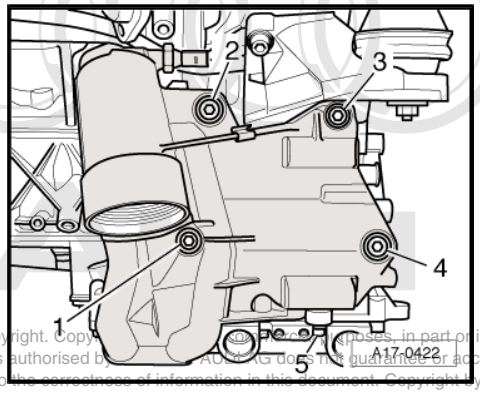

Protected by copyright. Copy[illegible] purposes, in part or in whole, is not permitted unless authorised by [illegible] AUDI AG does not guarantee or accept any liability with respect to the correctness of information in this document. Copyright by AUDI AG.

– Remove bush -arrow- from top section of sump.

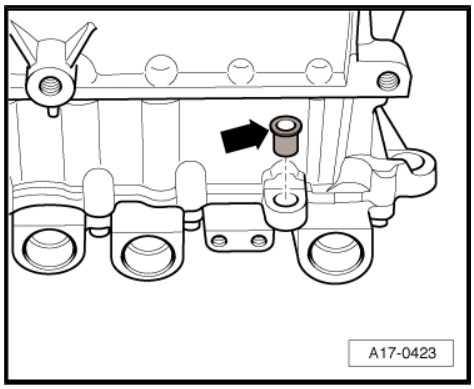

– Detach coolant hose -arrow- at oil cooler.

– Unscrew bolts -1 ... 4- and remove oil cooler.

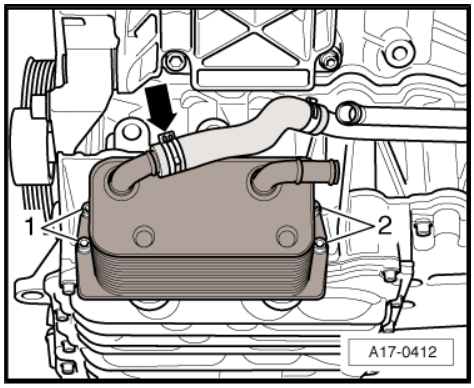

– Unscrew bolts -arrow- for sump (bottom section) and remove sump.

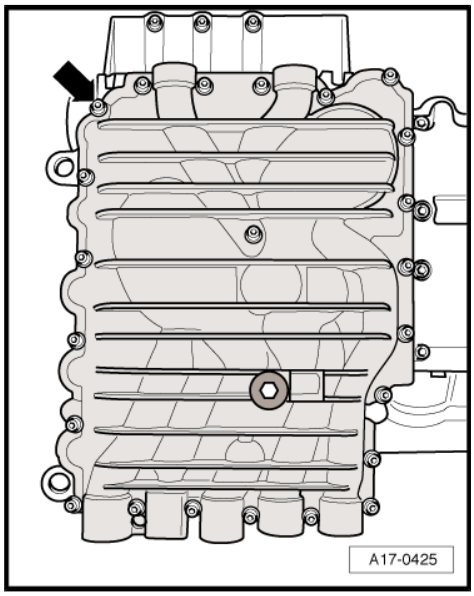

– Remove intermediate pipes -2- and -3- from oil pump and sump (bottom section).
– Remove O-ring -1-.

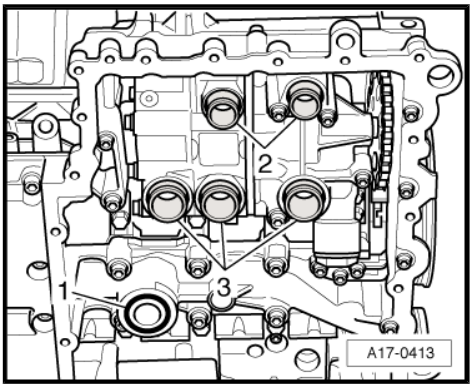

1.4.2 Installing

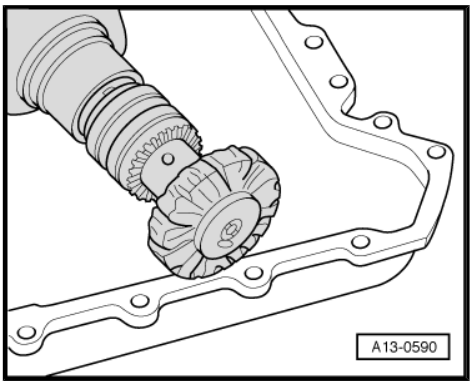

Note

Renew O-rings.

– Remove remaining sealant on bottom and top section of sump with a rotating plastic brush or similar.

> **WARNING**
>
> ***Wear safety goggles.***

– Clean sealing surfaces; they must be free of oil and grease.
– Insert intermediate pipes -2- and -3- into oil pump (use new O-rings).
– Insert a new O-ring -1- into groove around main oil channel.

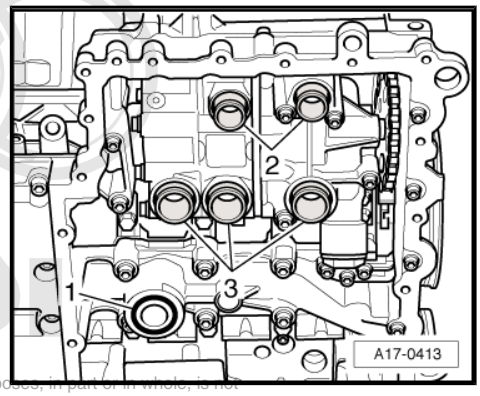

Protected by copyright. Copying for private or commercial purposes, in part or in whole, is not permitted unless authorised by AUDI AG. AUDI AG does not guarantee or accept any liability with respect to the correctness of information in this document. Copyright by AUDI AG.

– Cut off tube nozzle at front marking (nozzle approx. 2 mm ∅).

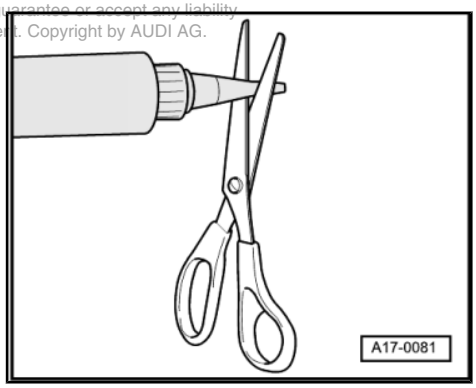

– Apply a bead of sealant -arrow 1- onto sealing flange of sump (bottom section).

• Thickness of sealant bead: 1.5 ... 2.0 mm

– Also apply a bead of silicone sealant -arrow 2- around middle securing point for sump (bottom section).

• Thickness of sealant bead: 1.5 ... 2.0 mm

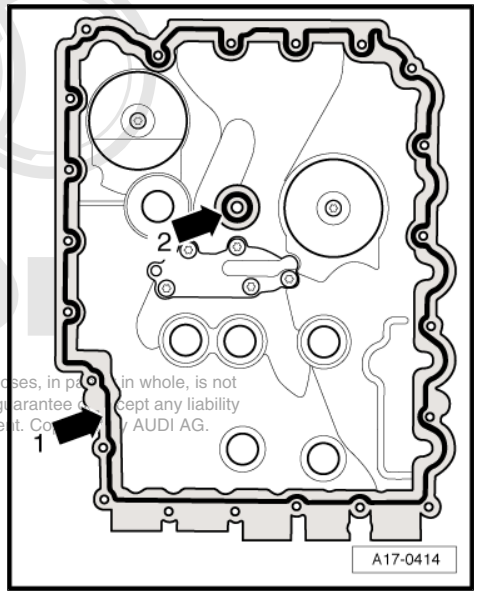

Note

♦ *The sealant bead must not be thicker than specified, otherwise excess sealant could enter the sump and clog the strainer in the oil pump.*

♦ *The sump (bottom section) must be installed within 5 minutes after applying sealant.*

Reproduction of this document or parts thereof for commercial purposes, in part or in whole, is not permitted unless authorised by AUDI AG. AUDI AG does not guarantee or accept any liability with respect to the correctness of information in this document. Copyright by AUDI AG.

– Attach sump (bottom section) and tighten all bolts in diagonal sequence and in stages.

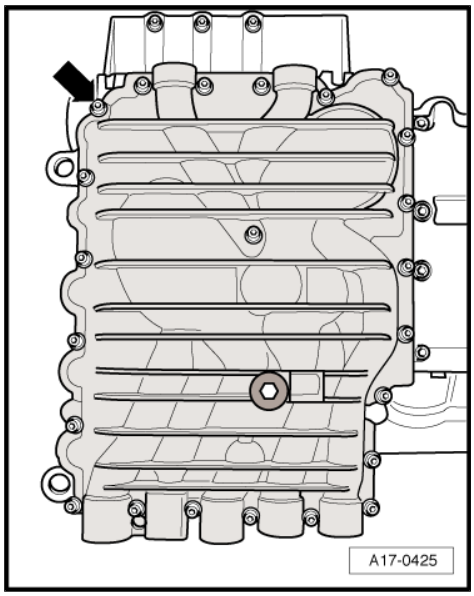

– Before tightening oil filter bracket, insert bush -arrow- in the hole on sump (bottom section).

• Installation position: the collar on bush faces upwards.

The remaining installation steps are carried out in the reverse sequence.

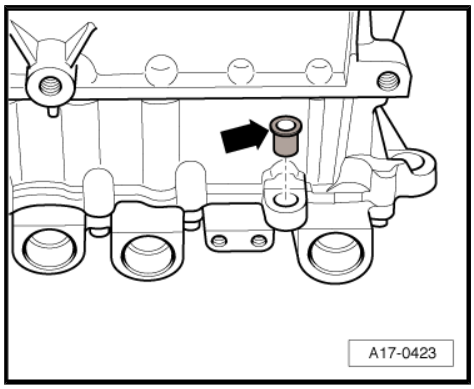

1.4.3 Tightening torques

Component	Nm
Connecting pipe to sump (bottom section)	8
Oil filter bracket M 6	9

Component	Nm
to engine M10	40
Oil cooler to sump (top section)	9
Oil filter housing to oil filter bracket	25
Alternator to oil filter bracket	20
Wire to alternator	16
Sump (bottom section) to sump (top section)	9

1.5 Oil pump - exploded view of components

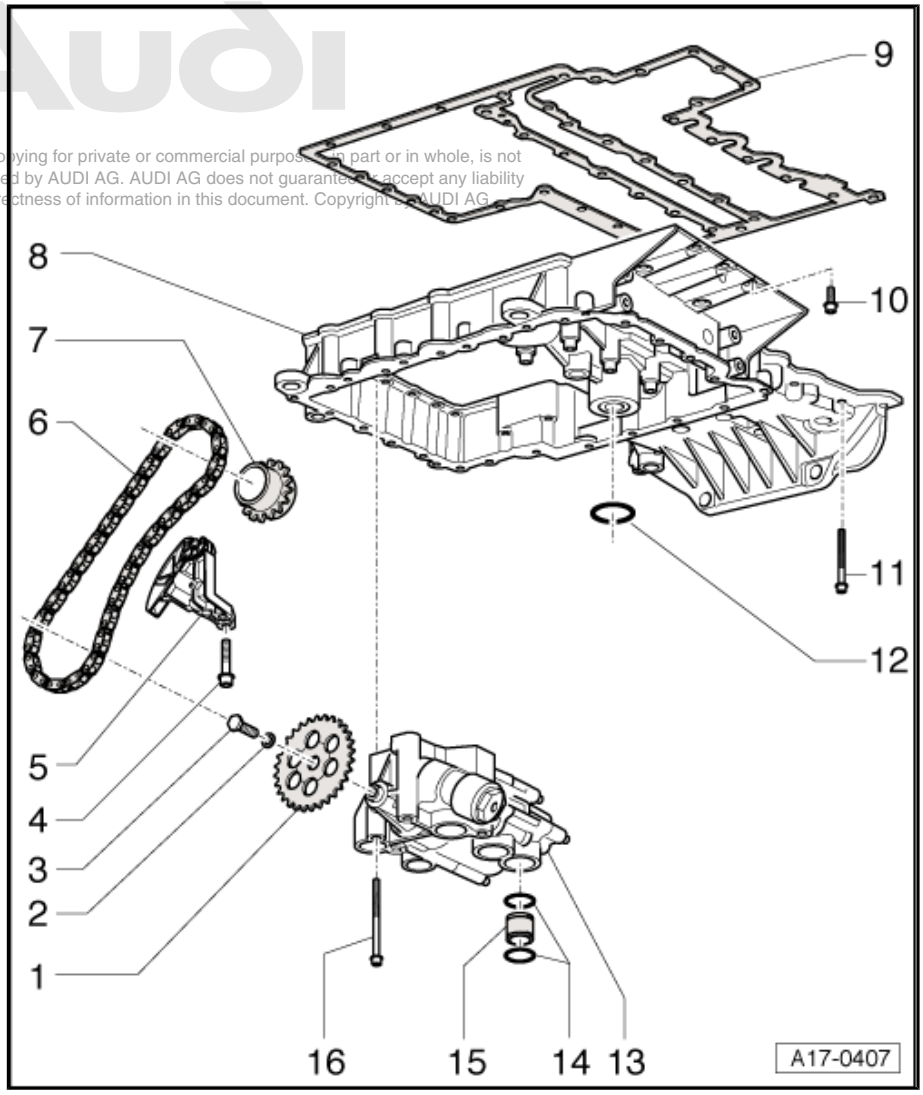

Protected by copyright. Copying for private or commercial purposes, in part or in whole, is not permitted unless authorised by AUDI AG. AUDI AG does not guarantee or accept any liability with respect to the correctness of information in this document. Copyright © AUDI AG

1 - Chain sprocket for oil pump

- ❑ Installation position: the curved rim faces oil pump
- ❑ Removing and installing: refer to Removing and installing oil pump ⇒ page 136

2 - Washer

3 - 35 Nm

- ❑ Bolt strength 10.9
- ❑ Install using locking fluid; locking fluid ⇒ Parts List

4 - M6 = 9 Nm; M8 = 20 Nm

5 - Chain tensioner

- ❑ Before removing, lock in place using locking pin -T40011-
- ❑ Do not dismantle
- ❑ Removing and installing: refer to Removing and installing oil pump ⇒ page 136

6 - Drive chain for oil pump

- ❑ Removing and installing: refer to Removing and installing oil pump ⇒ page 136

7 - Chain sprocket for oil pump

- ❑ Integral part of crankshaft

8 - Sump (top section)

- ❑ Removing and installing ⇒ page 137

9 - Gasket

- ❑ Renew

10 - Bolt

- ❑ Note different lengths
- ❑ Tightening sequence and tightening torque ⇒ page 139

11 - Bolt

- ❑ Note different lengths
- ❑ Tightening sequence and tightening torque ⇒ page 139

12 - O-ring

- ❑ Renew

13 - Oil pump

- ❑ Do not dismantle
- ❑ With pressure control valve
- ❑ Removing and installing ⇒ page 136

14 - O-rings

- ❑ 10 x
- ❑ Renew

15 - Intermediate pipe

- ❑ 5 x

16 - 9 Nm

1.6 Removing and installing oil pump

Special tools and workshop equipment required

- ♦ Locking pin -T40011-

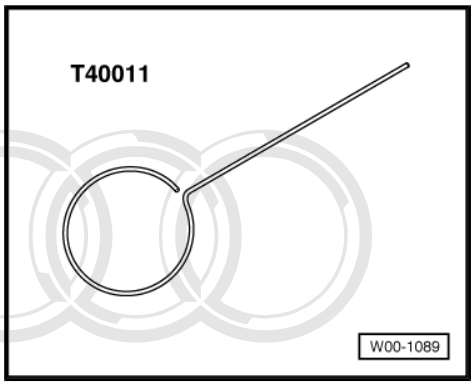

1.6.1 Removing

- Engine removed.
- Engine separated from gearbox.

– Remove bottom section of sump ⇒ page 131 .

– Press oil pump chain tensioner -2- down in direction of the -arrow- and lock in place using locking pin -T40011- .

– Unscrew bolts -1- and -3- and remove oil pump chain tensioner.

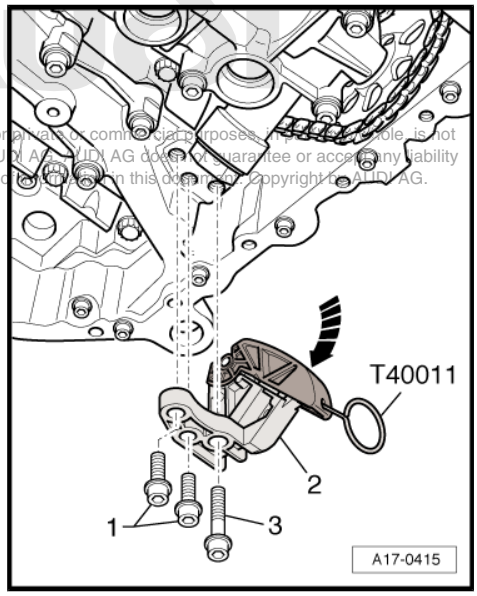

Protected by copyright. Copying for private or commercial purposes, in part or in whole, is not permitted unless authorised by AUDI AG. AUDI AG does not guarantee or accept any liability with respect to the correctness of information in this document. Copyright by AUDI AG.

– Unscrew bolts -1 ... 4-.

– Lift oil pump off dowel pins and remove chain from sprocket; to do so, swing oil pump to side slightly.

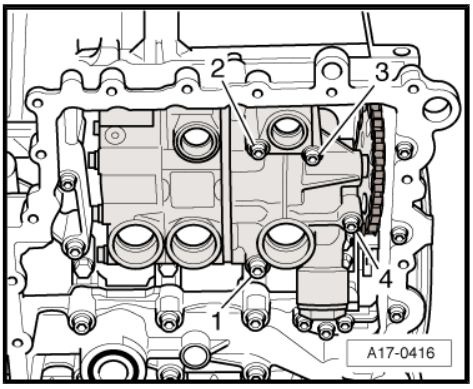

1.6.2 Installing

– First place oil pump chain -arrow- behind sprocket while inserting oil pump loosely into top section of sump.

– Before securing oil pump, fit oil pump drive chain onto chain sprocket.

– Insert oil pump with dowel pins into top section of sump.

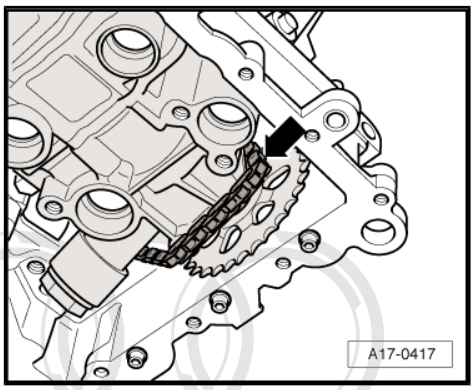

– Tighten bolts -1 … 4-.

Perform further installation in reverse order, paying attention to the following:

– Install oil sump (bottom section) ⇒ page 131 .

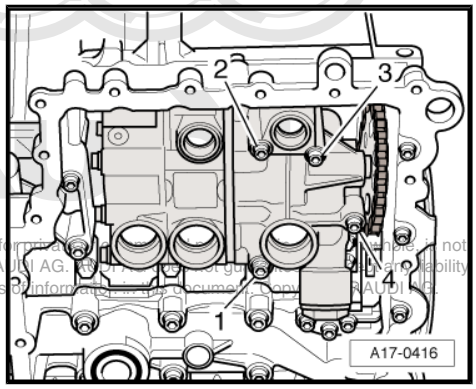

Protected by copyright. Copying for private or commercial purposes, in part or in whole, is not permitted unless authorised by AUDI AG. AUDI AG does not guarantee or assume any liability with respect to the correctness of information in this document. Copyright by AUDI AG.

1.6.3 Tightening torque

Component	Nm
Oil pump to top section of sump	9

1.7 Removing and installing sump (top section)

1.7.1 Removing

- Engine removed.
- Engine separated from gearbox.
- Engine secured to assembly stand.

– Remove bottom section of sump ⇒ page 131 .

– Remove oil pump ⇒ page 136 .

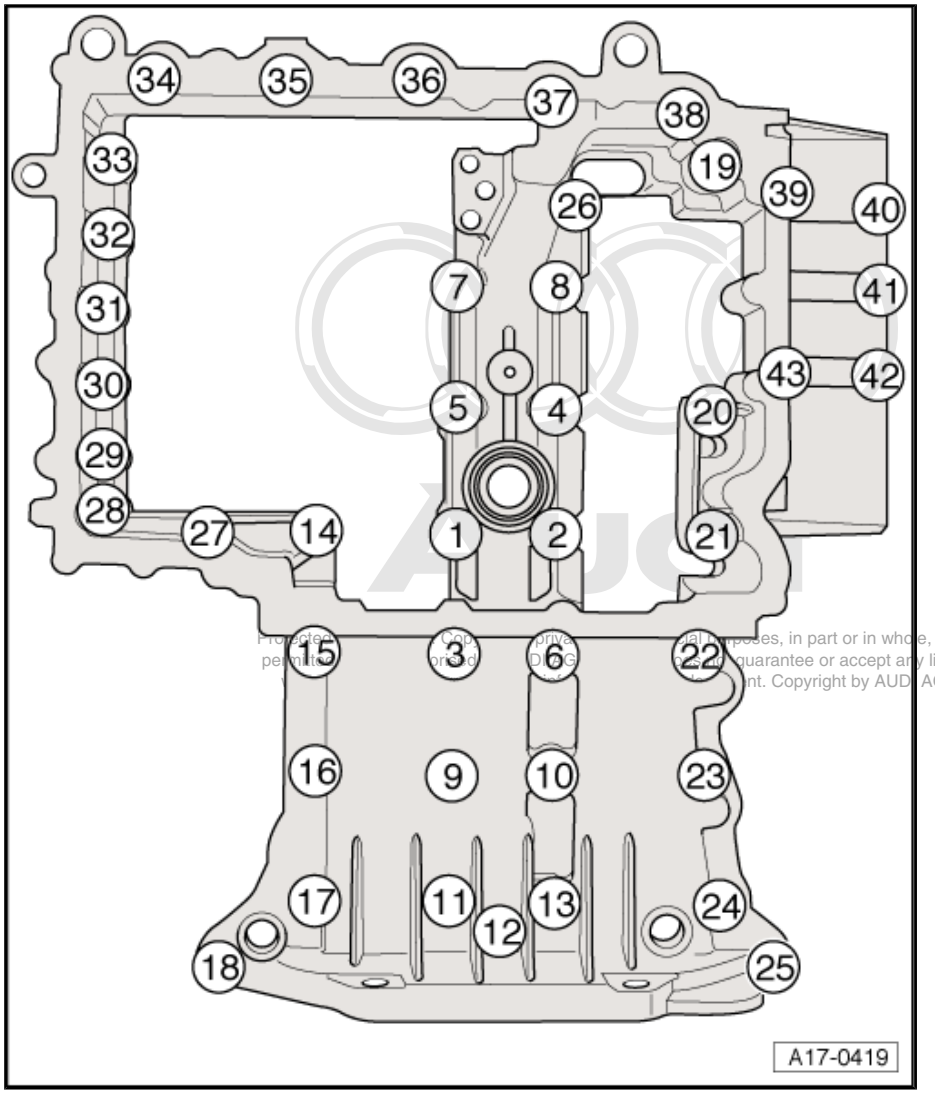

– Unscrew bolts -43 ... 1-.
– Remove top section of sump.

1.7.2 Installing

Installation is carried out in the reverse order; note the following:

Note

Renew seals and O-rings.

– Make sure that contact surfaces of cylinder block and sump (top section) align with gearbox.

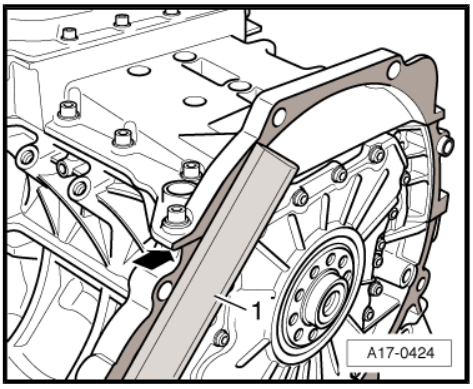

Protected by copyright. Copy[illegible] or commercial purposes, in part or in whol[illegible] permitted unless authorised by AU[illegible] AUDI AG does not guarantee or accept an[illegible] with respect to the correctness [illegible]tion in this document. Copyright by AUDI

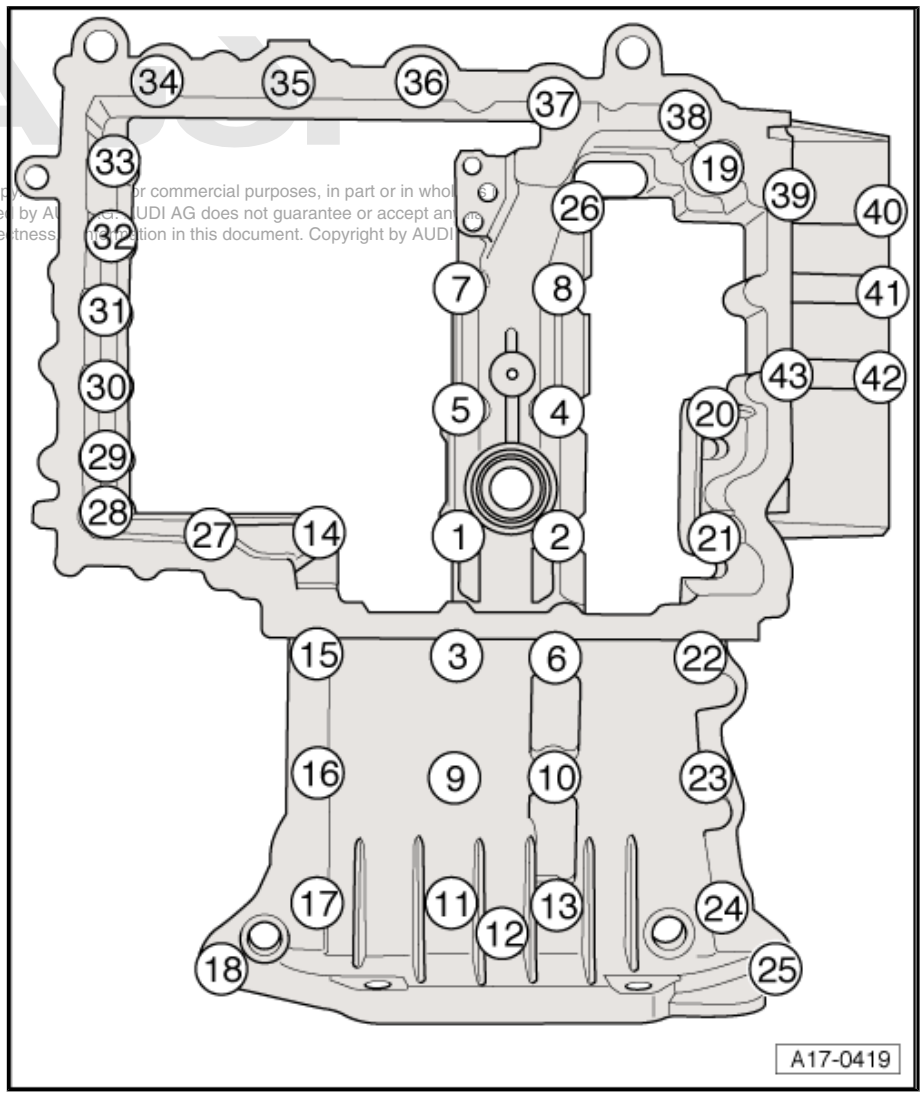

– Insert bolts -15 … 17- and -22 … 24- as well as -26- using locking fluid; locking fluid ⇒ Parts catalogue .

Note

Note different bolt lengths.

– Tighten bolts M8 -Items 1 … 25- to 20 Nm in the sequence shown.

– Tighten bolts M6 -Items 26 … 43- to 9 Nm in the sequence shown.
– Install oil pump ⇒ page 136 .
– Install oil sump (bottom section) ⇒ page 133 .

1.8 Renewing oil retention valves

1.8.1 Removing

- Engine removed.
- Engine separated from gearbox.

– Remove camshaft timing chains ⇒ page 71 .
– Remove cylinder heads (right and left) ⇒ page 89 .
– Unscrew oil retention valves -1- and -2-.

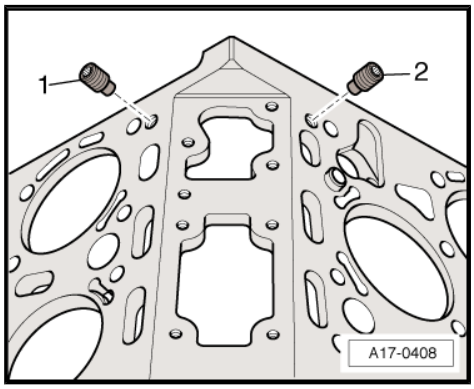

1.8.2 Installing

Install in reverse order.

– Install cylinder heads (right and left) ⇒ page 89 .
– Install camshaft timing chains ⇒ page 74 .

1.8.3 Tightening torque

Component	Nm
Oil retention valve in cylinder head	6

1.9 Checking oil level

Unlike other Audi models, the 12-cylinder engine has a dry sump lubrication system. This means the oil is not contained exclusively in the sump of the engine, rather it is distributed in varying proportions to the sump and oil reservoir, depending on the operating status of the engine.

Protected by copyright. Copying for private or commercial purposes, in part or in whole, is not permitted unless authorised by AUDI AG. AUDI AG does not guarantee or accept any liability with respect to the correctness of information in this document. Copyright by AUDI AG.

Caution

To prevent serious engine damage due to insufficient or excessive oil, the following points must be noted:

- *After working on engine or oil circuit where the oil may have only been partially drained, the remaining oil from sump and oil reservoir must be completely drained off before filling up with the appropriate oil volume. This is the only way to ensure an accurate determination of requirement for filling up* *⇒ page 143* *.*
- *The oil level must only be checked according to the following procedure. Other methods may result in serious engine damage.*

Special tools and workshop equipment required

- Vehicle diagnostic, testing and information system -VAS 5051- with diagnosis lead -VAS 5051/1-

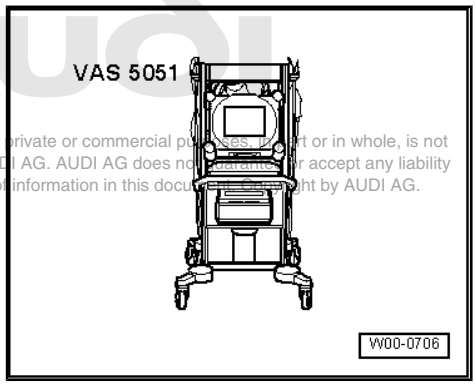

Protected by copyright. Copying for private or commercial purposes, in part or in whole, is not permitted unless authorised by AUDI AG. AUDI AG does not guarantee or accept any liability with respect to the correctness of information in this document. Copyright by AUDI AG.

1.9.1 Test sequence

– Bring vehicle up to operating temperature.

– Position the vehicle on a level surface.

Vehicle diagnostic, testing and information system -VAS 5051- with diagnosis lead -VAS 5051/1- is connected; vehicle self-diagnosis and vehicle system “01 - Engine electronics” is selected. When doing this, the engine must be running at idling speed.

– From the list -1- select diagnostic function “08 - Read data block”.

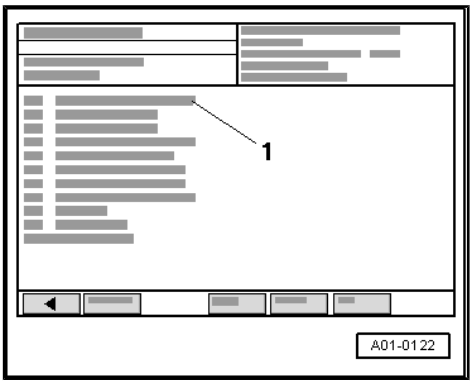

– Use keypad -2- to enter “134” for “Display group number 134” and confirm by touching the Q key.

1 - Enter display group

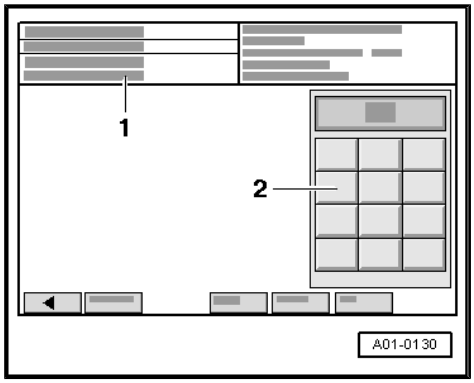

– Check display in zone -1-.

• Engine oil temperature at least 80°C.

– Exit function “08 - Read measured value block” by pressing the ↵ key.

– Allow the engine to run at idling speed for at least 2 minutes (at normal operating temperature) before checking oil level.

– Switch engine off.

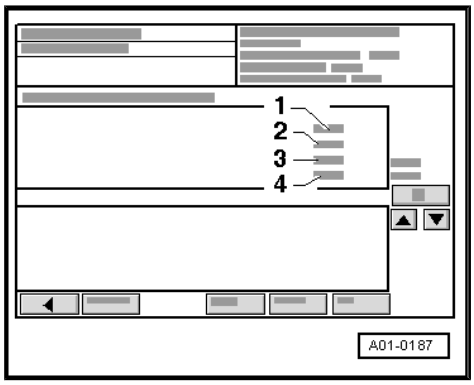

> ⚠ **Caution**
>
> ***The oil level check must be completed within two minutes of switching off the engine.***

– Pull out the dipstick -arrow- within 2 minutes, wipe off with a clean cloth and insert it again as far as it will go.

– Pull out the dipstick again and read off the oil level.

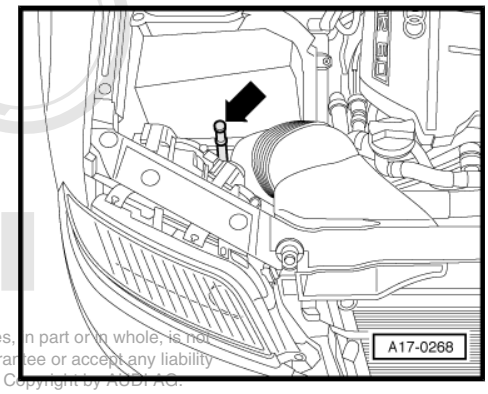

Protected by copyright. Copying for private or commercial purposes, in part or in whole, is not permitted unless authorised by AUDI AG. AUDI AG does not guarantee or accept any liability with respect to the correctness of information in this document. Copyright by AUDI AG.

Specification: MAX marking

a - Do not top up oil.

b - Oil may be topped up. The oil level may rise as far as area -a- after topping up.

c - Oil must be topped up. It is sufficient if the oil level is somewhere in area -b- after topping up.

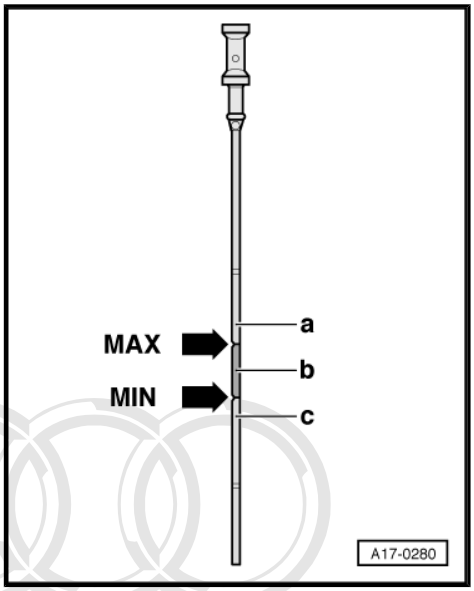

Note

The difference between the MIN and MAX marking on dipstick is approx. 1 litre.

1.10 Filling up engine oil after repairs

Special tools and workshop equipment required

- Drip tray

Caution

After working on engine or oil circuit where the oil may have only been partially drained, the remaining oil from sump and oil reservoir must be completely drained off before filling up with the appropriate oil volume. This is the only way to ensure an accurate determination of requirement for filling up.

Protected by copyright. Copying for private or commercial purposes, in part or in whole, is not permitted unless authorised by AUDI AG. AUDI AG does not guarantee or accept any liability with respect to the correctness of information in this document. Copyright by AUDI AG.

– Place drip tray underneath.
– Unscrew oil drain plugs -1- and -2-.
– Allow engine oil to drain completely from sump and oil reservoir.
– Screw in oil drain plugs with new seals.
– Tighten oil drain plug -2- on oil reservoir to 25 Nm.
– Tighten oil drain plug -1- on engine to 55 Nm.

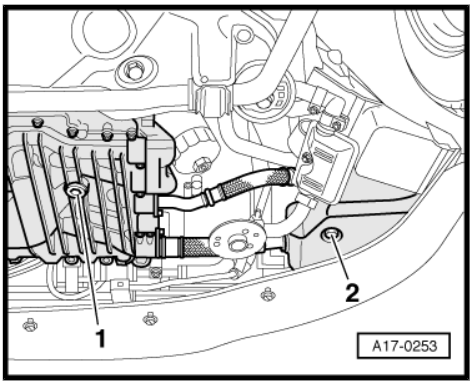

1.10.1 Viscosity grades and oil specifications

⇒ Maintenance ; Booklet 403 .

Oil capacity with filter replacement:

– Fill with the specified amount of oil for oil change with filter replacement ⇒ Data sheets for exhaust emission test.

Oil capacity without filter replacement:

– Fill with 1 litre less than the specified amount of oil for oil change with filter replacement ⇒ Data sheets for exhaust emission test.

– Carry out oil level check ⇒ page 140 .

1.10.2 Tightening torques

Component	Nm
Oil drain plug to sump	55
Oil drain plug to oil reservoir	25
Oil drain plug to oil filter housing	10

1.11 Checking oil pressure and oil pressure switch

Special tools and workshop equipment required

- Oil pressure tester - V.A.G 1342- with adapter - V.A.G 1342/15- and - V.A.G 1342/16-
- Voltage tester - V.A.G 1527 B-
- Adapter set -V.A.G 1594 A-

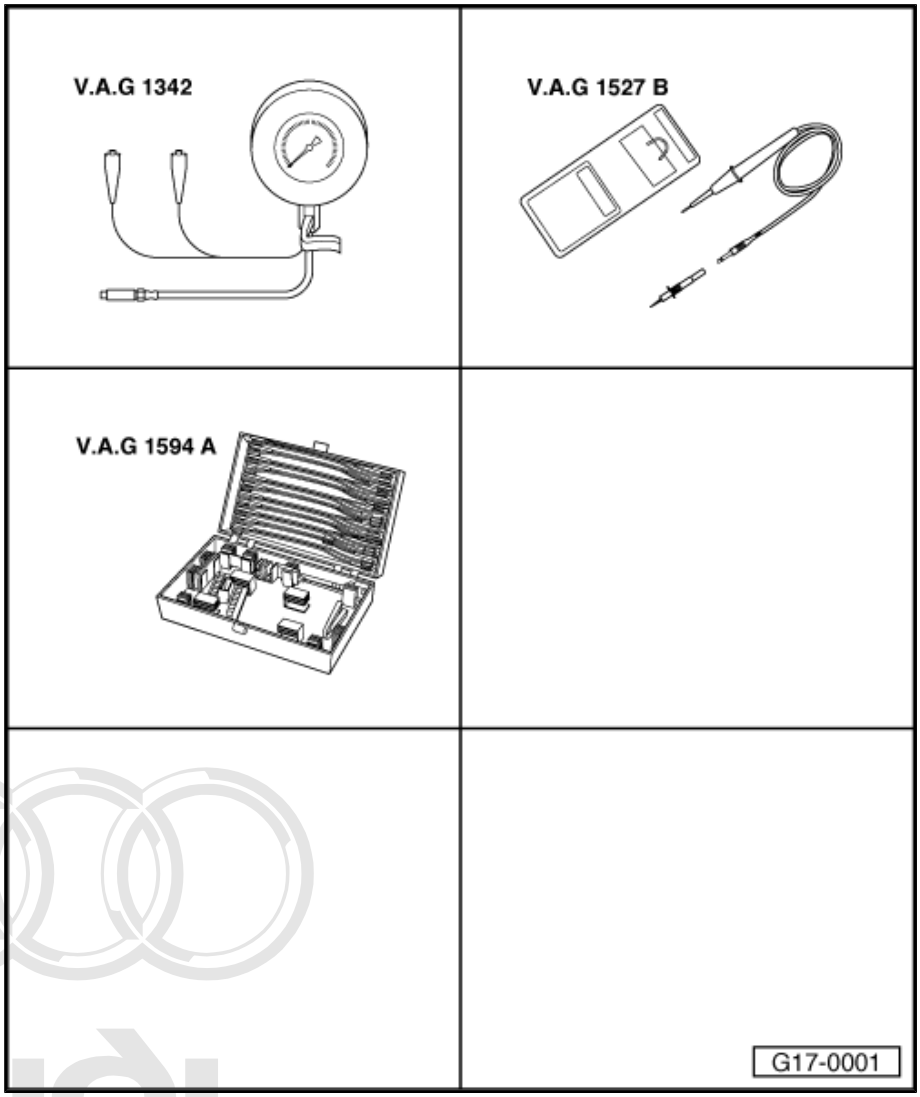

1.11.1 Test requirements

- Oil level OK.
- Engine oil temperature approx. 80°C.
- With driver information system (DIS), the display “OK” must illuminate.

Protected by copyright. Copying for private or commercial purposes, in part or in whole, is not permitted unless authorised by AUDI AG. AUDI AG does not guarantee or accept any liability with respect to the correctness of information in this document. Copyright by AUDI AG.

1.11.2 Test sequence

– Remove cover (right-side) in engine compartment -arrows-.

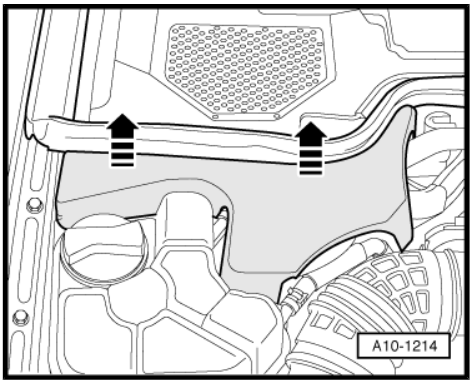

– Unclip cover -1- for air duct (right-side) on lock carrier in engine compartment.
– Remove air duct -2-.

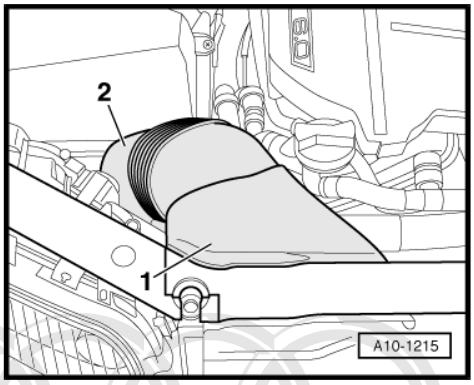

– Remove cover -1- for dipped beam headlights from headlight housing (right-side).
– Disconnect hose -6- at combination valve for secondary air.
– Unbolt coolant expansion tank -3- (the hoses remain connected).
– Unplug electrical connector for coolant shortage indicator switch -F66- at expansion tank (below).
– Detach electrical connector -5- for air mass meter -G70- .
– Detach air intake hose -4- from intake manifold.
– Unscrew the 2 nuts -2-.
– Raise air cleaner housing slightly and unplug electrical connector on rear of air cleaner housing.
– Move electrical wiring at air cleaner housing clear and remove air cleaner housing.

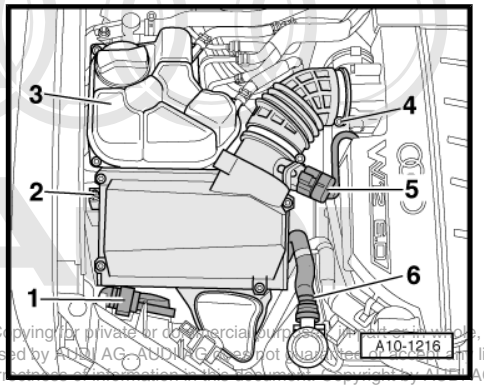

Protected by copyright. Copying for private or commercial purposes, in part or in whole, is not permitted unless authorised by AUDI AG. AUDI AG does not guarantee or assume any liability with respect to the correctness of information in this document. Copyright by AUDI AG.

– Unplug electrical connector -arrow- at oil pressure switch -F1- .
– Unscrew oil pressure switch.

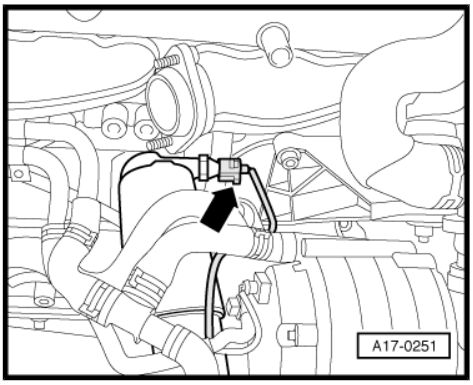

Note

To unscrew oil pressure switch, use a shortened 24 mm ring spanner or open-end spanner.

– Connect oil pressure tester -V.A.G 1342- with adapter -V.A.G 1342/15- and -V.A.G 1342/16- to hole for oil pressure switch.

– Screw oil pressure switch -2- into oil pressure tester -V.A.G 1342- .

– Connect brown wire of oil pressure tester to earth (-).

– Install air cleaner housing and connect all electrical wires and hoses.

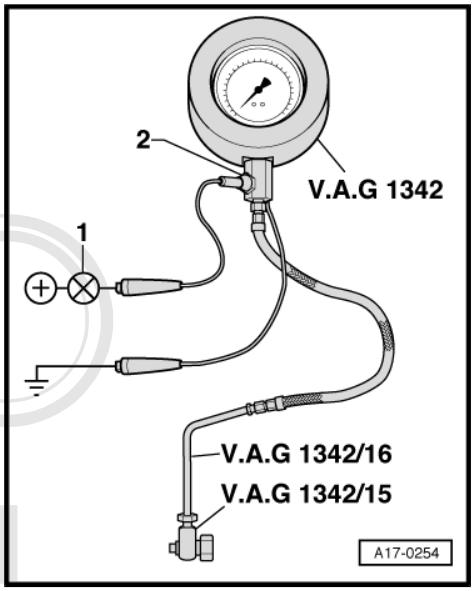

Note

Faults can occur if not all hoses and electrical wires are connected.

1.11.3 Checking oil pressure switch

Copyright by AUDI AG. Reproduction for private or commercial purposes, in part or in whole, is not permitted unless authorised by AUDI AG. AUDI AG does not guarantee or accept any liability with respect to the correctness of information in this document. Copyright by AUDI AG.

– Connect voltage tester -V.A.G 1527 B- -Item 1- with adapter leads from auxiliary measuring set -V.A.G 1594 A- to oil pressure switch and battery positive (+).

• LED should not light up.

If the LED lights up:

– Renew oil pressure switch.

– Start the engine.

Note

Observe tester and LED while starting, as switching point of oil pressure switch may already be exceeded when starting.

• Test lamp should light up at 1.2 ... 1.6 bar.

If the LED does not light up:

– Renew oil pressure switch.

1.11.4 Checking oil pressure

– Start the engine.

• Oil pressure at idling speed: at least 0.8 bar

• Minimum oil pressure at 2000 rpm: 3.0 bar

• Oil pressure at higher engine speeds: max. 7.0 bar

The pressure relief valve or oil pump is defective if the specifications are not attained.

– Renew the oil pump ⇒ page 136 .

1.11.5 Tightening torque

Component	Nm
Oil pressure switch to oil filter bracket	25[23)]

23) Install with new seal.

19 – Cooling

1 Removing and installing parts of the cooling system

WARNING

Hot steam/hot coolant may escape when opening expansion tank; cover filler cap with cloth and open carefully.

Note

- *When the engine is warm the cooling system is under pressure. If necessary release pressure before commencing repair work.*
- *Secure all hose connections with the correct type of hose clips (same as original equipment): ⇒ Parts catalogue*
- *Hose clip pliers - V.A.G 1921- are recommended for fitting spring-type hose clips.*
- *Always fit new seals and gaskets.*
- *The arrow markings on coolant pipes and on ends of hoses must align.*

Protected by copyright. Copying for private or commercial purposes, in part or in whole, is not permitted unless authorised by AUDI AG. AUDI AG does not guarantee or accept any liability with respect to the correctness of information in this document. Copyright by AUDI AG.

1.1 Parts of cooling system

1.1.1 Connection diagram for coolant hoses - vehicles without auxiliary heater

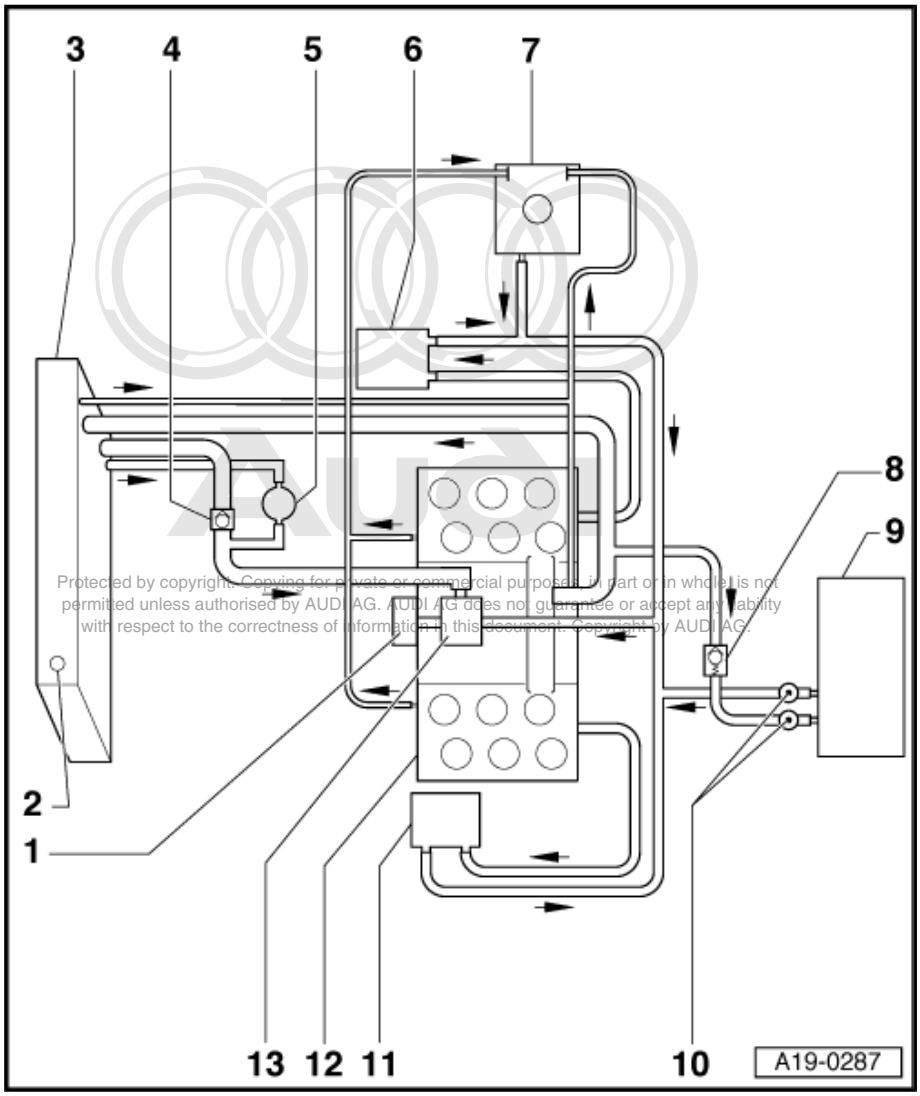

Protected by copyright. Copying for private or commercial purposes, in part or in whole is not permitted unless authorised by AUDI AG. AUDI AG does not guarantee or accept any liability with respect to the correctness of information in this document. Copyright by AUDI AG.

1 - Coolant pump

- ❑ Removing and installing ⇒ page 156

2 - Bleeder screw

3 - Radiator

- ❑ Removing and installing ⇒ page 174
- ❑ After replacing, fill with new coolant

4 - Non-return valve

5 - Continued circulation coolant pump -V51-

6 - Alternator

7 - Expansion tank

- ❑ With filler cap
- ❑ Checking pressure relief valve in filler cap ⇒ page 180

8 - Non-return valve

9 - Heat exchanger

- ❑ After replacing, fill with new coolant

10 - Bleeder screws

11 - Oil cooler

- ❑ Removing and installing ⇒ page 127

12 - Cylinder head/cylinder block

- ❑ After replacing, fill with new coolant

13 - Thermostat

- ❑ With bleeder screw
- ❑ Checking ⇒ page 158
- ❑ Removing and installing ⇒ page 159

1.1.2 Connection diagram for coolant hoses - vehicles with auxiliary heater

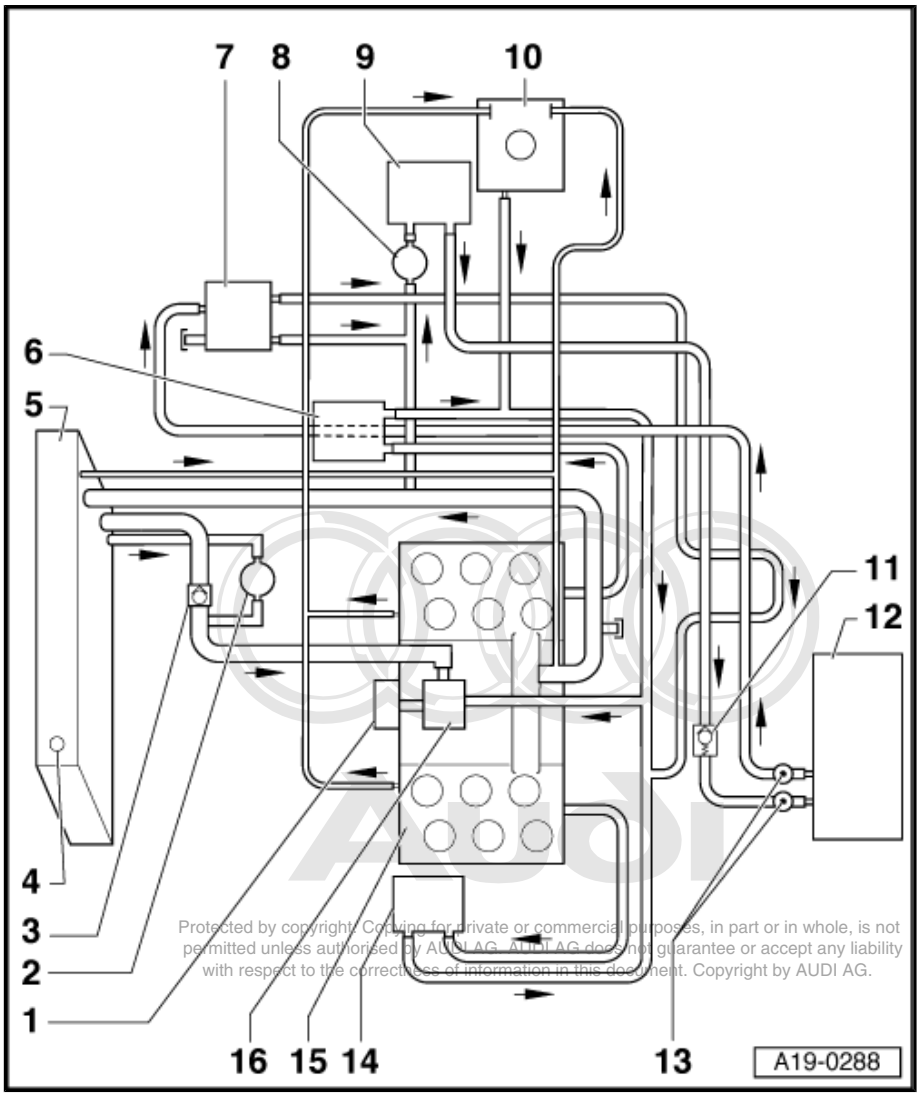

Protected by copyright. Copying for private or commercial purposes, in part or in whole, is not permitted unless authorised by AUDI AG. AUDI AG does not guarantee or accept any liability with respect to the correctness of information in this document. Copyright by AUDI AG.

1 - Coolant pump

- ❑ Removing and installing ⇒ page 156

2 - Continued circulation coolant pump -V51-

3 - Non-return valve

4 - Bleeder screw

5 - Radiator

- ❑ Removing and installing ⇒ page 174
- ❑ After replacing, fill with new coolant

6 - Alternator

7 - Coolant shut-off valve - N279-

- ❑ Checking ⇒ Auxiliary/ supplementary heater; Rep. Gr. 82

8 - Electrical coolant pump for auxiliary heater

9 - Auxiliary heater

10 - Expansion tank

- ❑ With filler cap
- ❑ Checking pressure relief valve in filler cap ⇒ page 180

11 - Non-return valve

12 - Heat exchanger

- ❑ After replacing, fill with new coolant

13 - Bleeder screws

14 - Oil cooler

- ❑ Removing and installing ⇒ page 127

15 - Cylinder head/cylinder block

- ❑ After replacing, fill with new coolant

16 - Thermostat

- ❑ With bleeder screw
- ❑ Checking ⇒ page 158
- ❑ Removing and installing ⇒ page 159

1.2 Draining and filling cooling system

Special tools and workshop equipment required

- Adapter -V.A.G 1274/8-
- Pipe -V.A.G 1274/10-
- Drip tray -V.A.G 1306-
- Hose clip pliers - V.A.G 1921-
- Cooling system filler unit - VAS 6096-
- Refractometer -T10007-

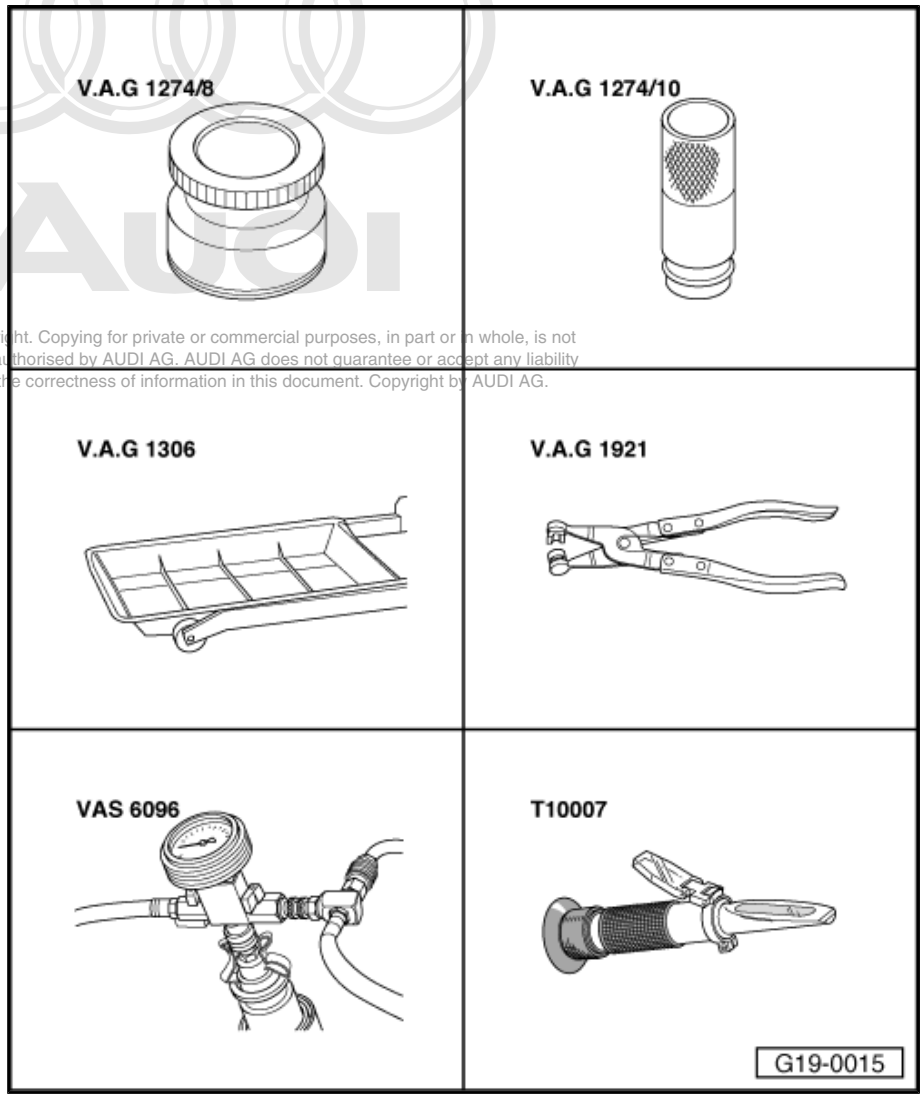

Protected by copyright. Copying for private or commercial purposes, in part or in whole, is not permitted unless authorised by AUDI AG. AUDI AG does not guarantee or accept any liability with respect to the correctness of information in this document. Copyright by AUDI AG.

1.2.1 Draining

Note

Collect drained coolant in a clean container for re-use or disposal.

WARNING

Hot steam/hot coolant may escape when opening expansion tank; cover filler cap with cloth and open carefully.

– Open filler cap on coolant expansion tank.

– Vehicles with auxiliary heater: remove bolts -arrows- securing exhaust pipe for auxiliary/additional heater to noise insulation.

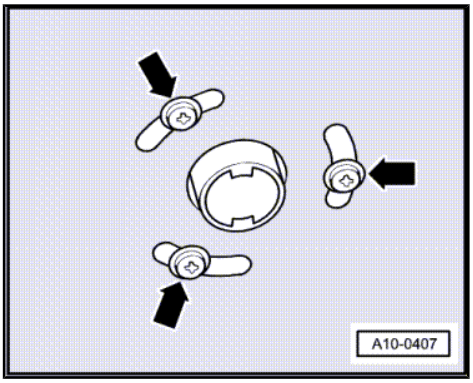

– Loosen quick release fasteners -1- and remove noise insulation.

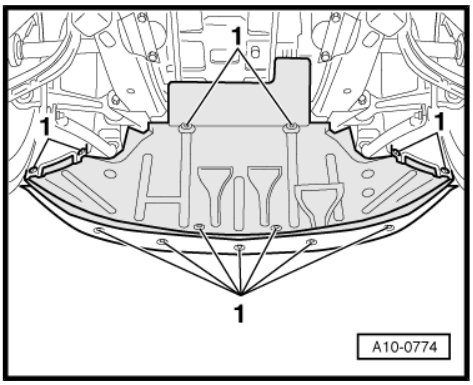

– Place drip tray -V.A.G 1306- under engine.
– Disconnect coolant hose at bottom of oil cooler -arrow- and drain off coolant.

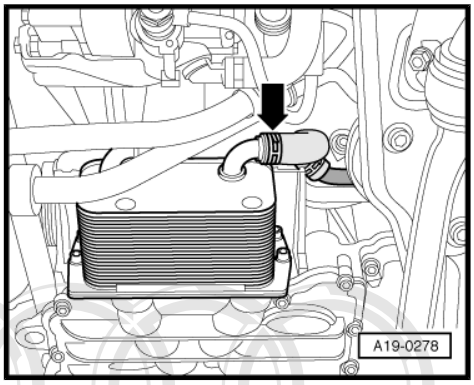

– Disconnect coolant hose from radiator (bottom right) -arrow- and drain off coolant.

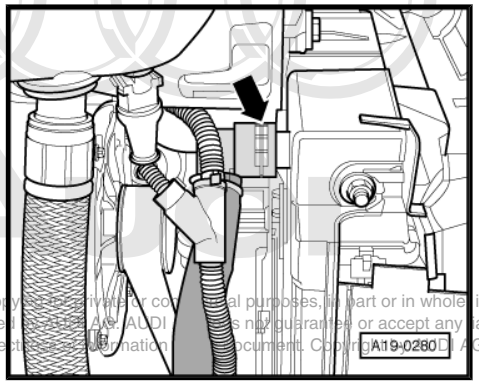

Protected by copyright. Copying for private or commercial purposes, in part or in whole, is not permitted unless authorised by AUDI AG. AUDI AG does not guarantee or accept any liability with respect to the correctness of information in this document. Copyright by AUDI AG.

– Disconnect coolant hose (right-side) at engine -arrow- and drain off remaining coolant.

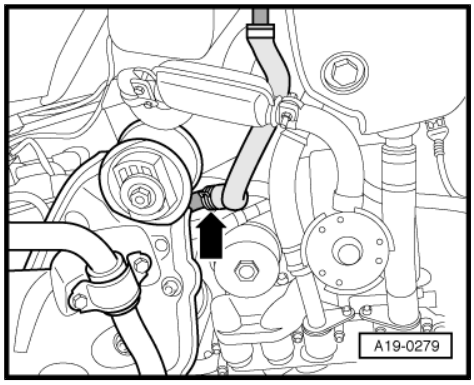

1.2.2 Filling

Note

- *The cooling system is filled all year round with a mixture of water and antifreeze/corrosion protection agent.*
- *It is important to use only coolant additive Plus -G 012 A8F A1- (also designated as "G12+") "meeting specification TL VW 774 F". Other coolant additives could seriously impair in particular the anticorrosion properties. The resulting damage could lead to loss of coolant and consequently to serious engine damage.*
- *Coolant additive "G12+" may be mixed with additives "G11" and "G12".*
- *"G12+" and coolant additives marked "Meets specification TL VW 774 F" prevent frost and corrosion damage and stop scale from forming. Such additives also raise the boiling point of the coolant. For these reasons the cooling system must be filled all year round with the correct antifreeze and anticorrosion additive.*
- *Because of its high boiling point, the coolant improves engine reliability under heavy loads, particularly in countries with tropical climates.*
- *Frost protection is required down to about -25°C (in countries with arctic climate: down to about -35°C).*
- *The coolant concentration must not be reduced by adding water even in warmer seasons and in warmer countries. The antifreeze percentage must be at least 40 %.*
- *If greater frost protection is required in very cold climates, the amount of "G 12+" can be increased, but only up to 60 % (this gives frost protection to about -40°C). If the antifreeze percentage exceeds 60%, frost protection decreases again and cooling efficiency is also impaired.*
- *Only use clean drinking water for mixing coolant.*
- *If radiator, heat exchanger, cylinder head, cylinder head gasket or cylinder block have been renewed, do not re-use old coolant.*
- *Contaminated or dirty coolant must not be used again.*
- *To check frost protection level of coolant additive "G12+" you must use a refractometer -T10007- .*

Reproduction or duplication of this document or any part of it for commercial purposes, in part or in whole, is not permitted unless authorised by AUDI AG. AUDI AG does not guarantee or accept any liability with respect to the correctness of information in this document. Copyright by AUDI AG.

– Attach coolant hose (right-side) -arrow- at engine.

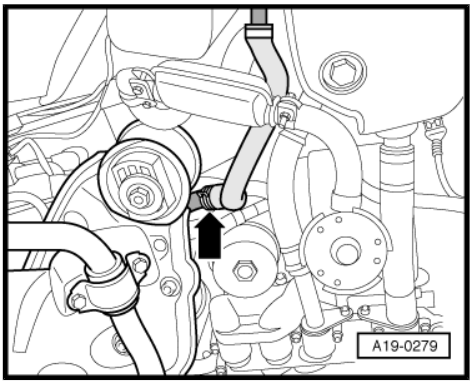

– Attach coolant hose (bottom right) at radiator -arrow-.

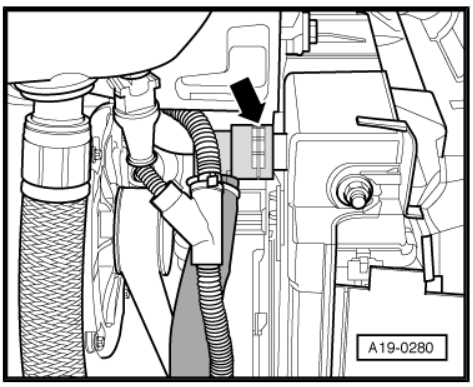

Protected by copyright. Copying for private or commercial purposes, in part or in whole, is not permitted unless authorised by AUDI AG. AUDI AG does not guarantee or accept any liability with respect to the correctness of information in this document. Copyright by AUDI AG.

– Attach coolant hose (bottom) at oil cooler -arrow-.

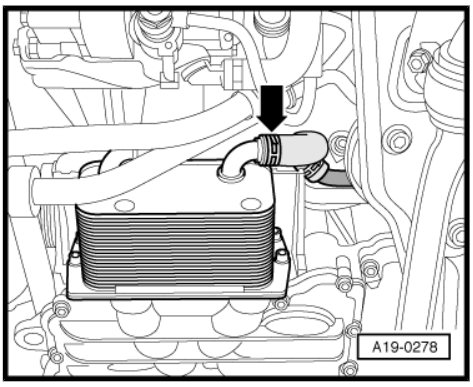

– Fill reservoir -VAS 6096/1- with at least 15 litres of premixed coolant (based on recommended ratio):

- “G12+” (40 %) and water (60 %) for frost protection to -25°C
- “G12+” (50 %) and water (50 %) for frost protection to -35°C
- “G12+” (60 %) and water (40 %) for frost protection to -40°C

– Screw adapter for cooling system tester -V.A.G 1274/8- onto coolant expansion tank.

– Fit cooling system charge unit -VAS 6096- onto adapter -V.A.G 1274/8- .

– Feed vent hose -1- into a small container -2-. (The vented air draws along a small amount of coolant, which should be collected.)

– Close both valves -A- and -B- (turn lever perpendicular to direction of flow).

– Connect hose -3- to compressed air.

- Pressure: 6 ... 10 bar.

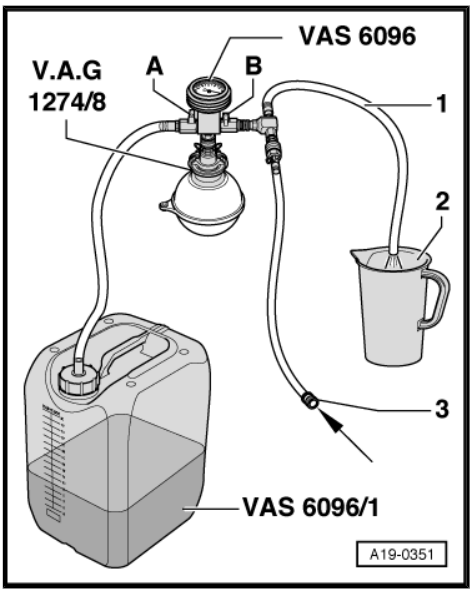

– Open valve -B- (turn lever in direction of flow).

The suction jet pump generates a vacuum in the cooling system.

- The needle on the gauge must move into the green zone.

– Also briefly open valve -A- (turn lever in direction of flow) so that hose on charge unit -VAS 6096/1- can fill with coolant.

– Close valve -A- again.

– Leave valve -B- open for another 2 minutes.

- The suction jet pump will continue generating a vacuum in the cooling system.
- The needle on the gauge must remain in the green zone.

– Close valve -B-.

- The needle on the gauge must stop in the green zone. The vacuum level in the cooling system is then sufficient for subsequent filling.

If the needle does not reach the green area, repeat the process.

If the vacuum level drops, there is a leak in the cooling system.

– Detach the compressed air hose.

– Open valve -A-.

Protected by copyright. Copying for private or commercial purposes, in part or in whole, is not permitted unless authorized by AUDI AG. AUDI AG does not guarantee or assume any liability with respect to the correctness of information in this document. Copyright by AUDI AG.

The vacuum in the cooling system causes the coolant to be drawn out of the cooling system charge unit -VAS 6096/1- , the cooling system is then filled.

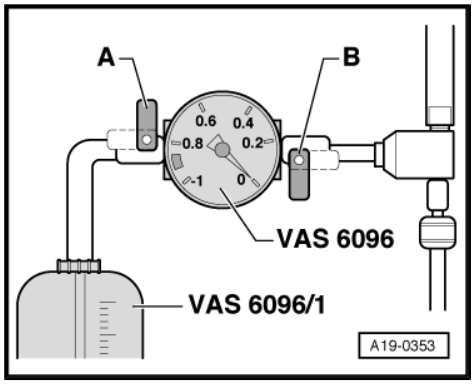

– Detach cooling system charge unit -VAS 6096- from expansion tank.

– Fit pipe -V.A.G 1274/10- onto adapter -V.A.G 1274/8- .

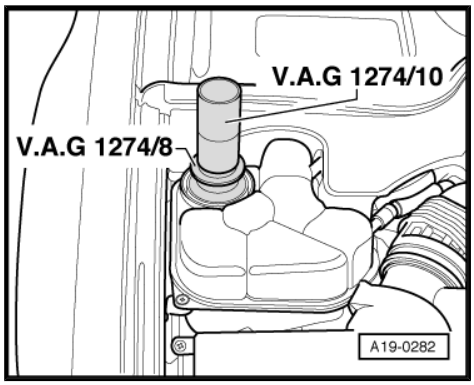

– Open bleeder screw -arrow- at top left of radiator.

– Fill up with coolant until it flows out at bleeder hole on radiator.

– Close the bleeder screw.

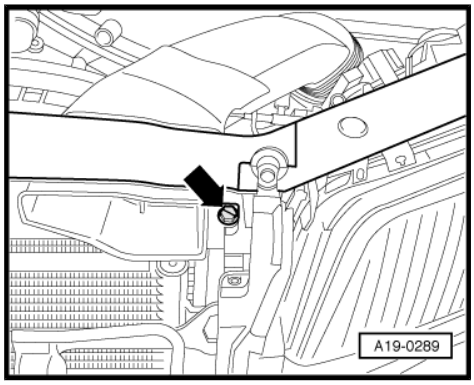

– Open bleeder screw -arrow- above thermostat.
– Fill up with coolant until it flows out at bleeder hole in coolant pipe.
– Close the bleeder screw.

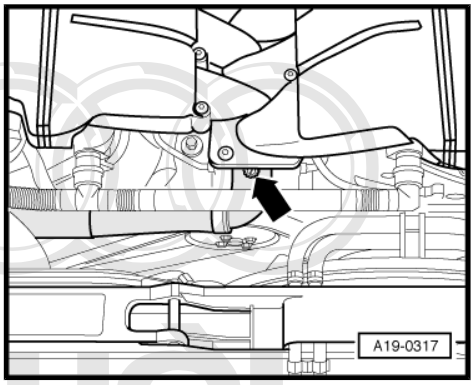

– Open bleeder screws -arrows- at heater supply and return pipes.
– Fill up with coolant until it flows out at bleeder hole in coolant hoses.
– Close the bleeder screws.

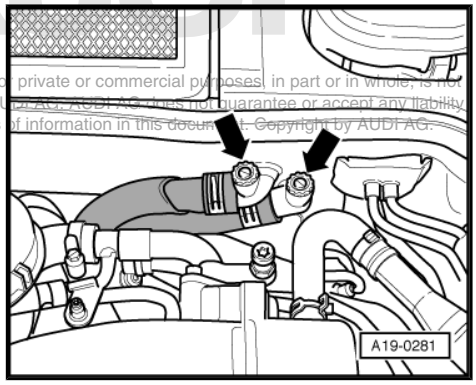

Protected by copyright. Copying for private or commercial purposes, in part or in whole, is not permitted unless authorised by AUDI AG. AUDI AG does not guarantee or accept any liability with respect to the correctness of information in this document. Copyright by AUDI AG.

– Unclip plenum chamber cover (left-side) -arrows- and remove.

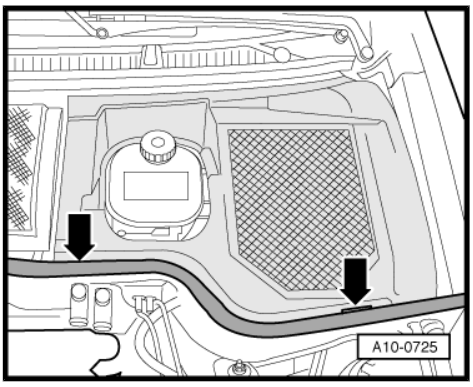

– Unplug the 2-way electrical connector -arrow- to the pump valve unit.

– Set heater/air conditioner on both sides to “LO”.

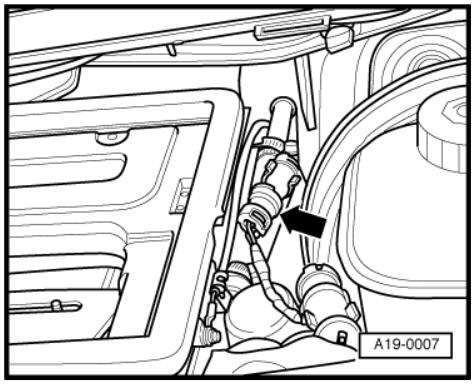

Note

- *The coolant circulation pump -V50- for pump valve unit must not be started until coolant circuit has been bled.*
- *The pump valve unit will be damaged if it is run dry.*

– On vehicles with auxiliary heater, switch heater briefly on and then off again.

– Connect the 2-way electrical connector -arrow- to the pump valve unit.

– Tighten filler cap on expansion tank.

– Set heater/air conditioner on both sides to “HI”.

– Start engine and maintain an engine speed of about 2,000 rpm for approx. 3 minutes.

– Switch off engine.

WARNING

Hot steam/hot coolant may escape when opening expansion tank; cover filler cap with cloth and open carefully.

Protected by copyright. Copying for private or commercial purposes, in part or in whole, is not permitted unless authorised by AUDI AG. AUDI AG does not guarantee or accept any liability with respect to the correctness of information in this document. Copyright by AUDI AG.

– Check coolant level and top up if necessary. When the engine is at normal operating temperature, the coolant level must be on the MAX mark; when the engine is cold, between the MIN and MAX marks.

– Check that cooling system is correctly filled:

- In setting “HI”, the heater must produce the same temperature on driver's and passenger's side.
- The pump valve unit for heater/air conditioner must not make any noise.

– Repeat the bleeding procedure if necessary ⇒ page 154 .

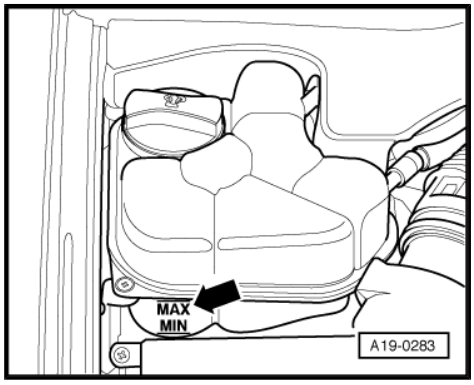

1.3 Removing and installing coolant pump

1.3.1 Removing

– Drain off coolant ⇒ page 150 .

– Pull lock carrier forwards ⇒ page 42 .

– Remove poly V-belt ⇒ page 50 .

– Unscrew bolts -arrows- and remove pulley.

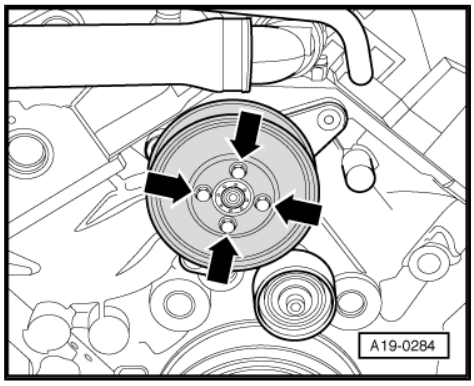

– Unscrew securing bolts -arrows- for coolant pump and remove coolant pump.

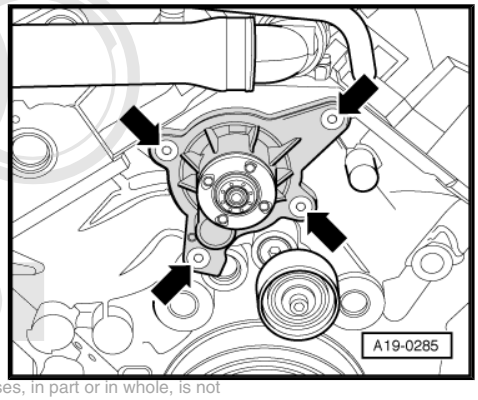

Protected by copyright. Copying for private or commercial purposes, in part or in whole, is not permitted unless authorised by AUDI AG. AUDI AG does not guarantee or accept any liability with respect to the correctness of information in this document. Copyright by AUDI AG.

1.3.2 Installing

Installation is carried out in the reverse order; note the following:

Note

Renew seals and gaskets.

– Install poly V-belt ⇒ page 50 .
– Install lock carrier ⇒ page 47 .
– Fill cooling system ⇒ page 152 .

1.3.3 Tightening torques

Component	Nm
Coolant pump to cylinder block	10
Pulley to coolant pump	8

1.4 Checking thermostat

Special tools and workshop equipment required

- Hand-held multimeter -V.A.G 1526 A-
- Adapter set -V.A.G 1594 A-
- Vehicle diagnostic, testing and information system -VAS 5051- with diagnosis lead -VAS 5051/1-

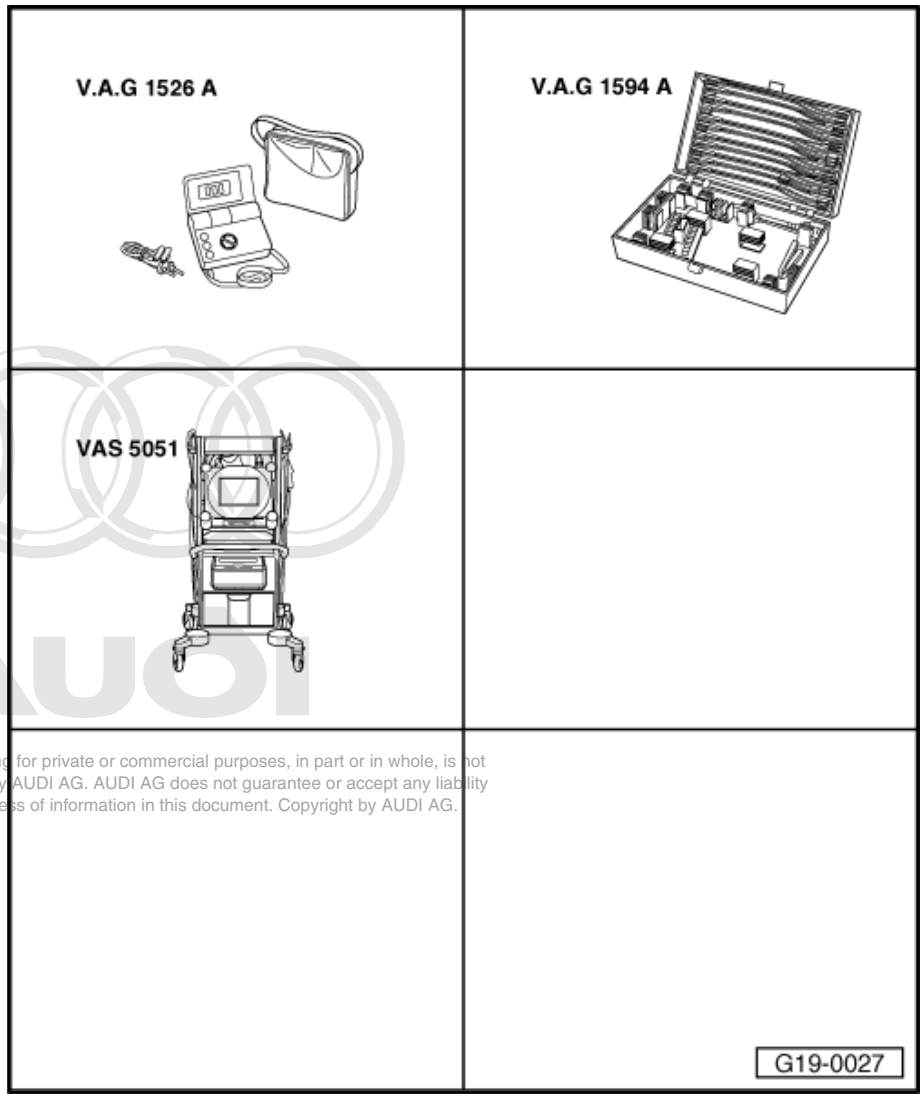

Protected by copyright. Copying for private or commercial purposes, in part or in whole, is not permitted unless authorised by AUDI AG. AUDI AG does not guarantee or accept any liability with respect to the correctness of information in this document. Copyright by AUDI AG.

1.4.1 Test requirement

- Engine cold.

1.4.2 Testing internal resistance of heating element

Note

The map-controlled engine cooling thermostat -F265- and the wiring connections are monitored by the engine control unit.

- Vehicle diagnostic, testing and information system -VAS 5051- with diagnosis lead -VAS 5051/1- is connected; vehicle self-diagnosis and vehicle system “01 - Engine electronics” is selected. When doing this the ignition must be switched on.

– Read out fault memory of engine control unit.

If a fault is displayed concerning the map-controlled engine cooling thermostat -F265- :

– Remove top section of intake manifold ⇒ page 96 .
– Remove bottom section of intake manifold ⇒ page 99 .
– Unplug the 2-pin connector -arrow- at map-controlled engine cooling thermostat.
– Connect multimeter to thermostat to measure resistance.
♦ Specification: 14 ... 16 Ω at 25°C

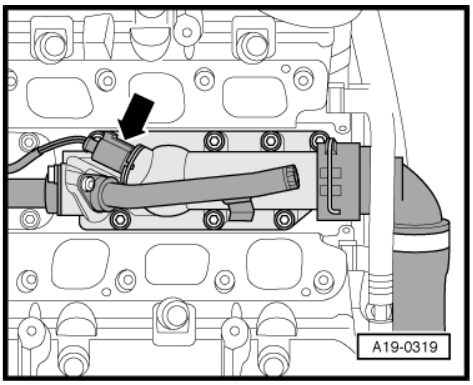

If specification is not reached:

– Renew map-controlled engine cooling thermostat -F265- ⇒ ⇒ page 159 .

If reading matches specification:

– Use current flow diagram to check wiring.

After finishing test:

– Install bottom section of intake manifold ⇒ page 99 .
– Install top section of intake manifold ⇒ page 96 .

1.5 Removing and installing thermostat

1.5.1 Removing

– Drain off coolant ⇒ page 150 .

Note

The coolant must be completely drained, otherwise there is a danger of coolant entering into intake ports.

– Remove top section of intake manifold ⇒ page 92 .
– Remove bottom section of intake manifold ⇒ page 99 .
– Detach electrical connector -2-.
– Detach coolant hose -3- at front of thermostat housing.
– Unscrew bolt -1-.
– Unscrew bolts -arrows- and remove thermostat housing.

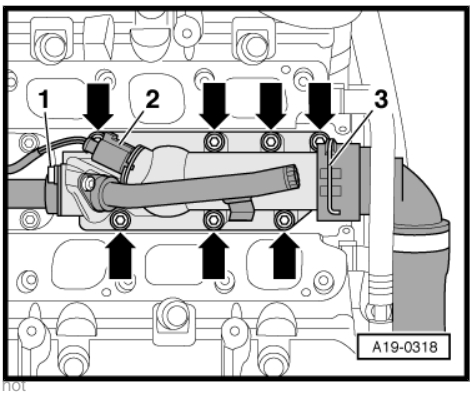

Protected by copyright. Copying for private or commercial purposes, in part or in whole, is not permitted unless authorised by AUDI AG. AUDI AG does not guarantee or accept any liability with respect to the correctness of information in this document. Copyright by AUDI AG.

1.5.2 Installing

Installation is carried out in the reverse order; note the following:

Note

Renew seals and O-rings.

– Install bottom section of intake manifold ⇒ page 99 .
– Install top section of intake manifold ⇒ page 96 .

– Fill cooling system ⇒ page 152 .

1.5.3 Tightening torques

Component	Nm
Thermostat housing to cylinder block	8
Coolant pipe to thermostat housing	8

1.6 Removing and installing top coolant pipe (small)

Special tools and workshop equipment required

♦ Spring type clip pliers -VAS 5024 A-

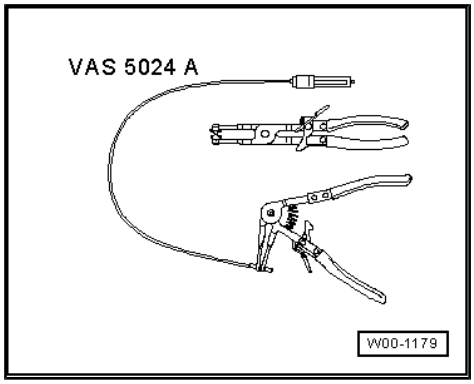

1.6.1 Removing

– Drain off coolant ⇒ page 150 .
– Remove top section of intake manifold ⇒ page 92 .
– Remove bottom section of intake manifold ⇒ page 99 .
– Unscrew bolts -1- and -2- and detach coolant hose -arrow-.
– Pull off coolant pipe from thermostat housing towards rear.

Note

Shown from rear with engine removed for illustration purposes.

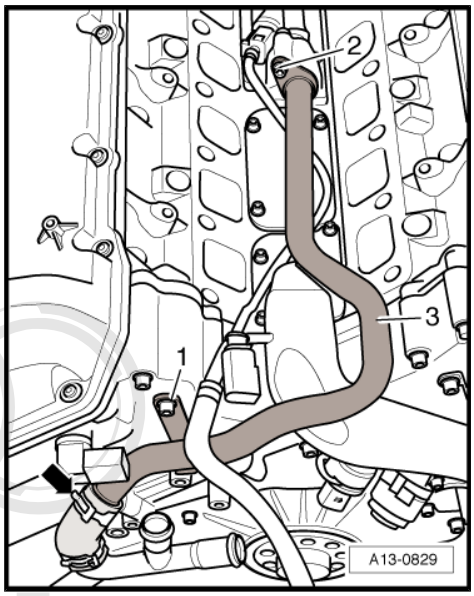

1.6.2 Installing

Installation is carried out in the reverse order; note the following:

Protected by copyright. Copying for private or commercial purposes, in part or in whole, is not permitted unless authorised by AUDI AG. AUDI AG does not guarantee or accept any liability with respect to the correctness of information in this document. Copyright by AUDI AG.

Note

- *Renew O-rings.*
- *Secure all hose connections with the correct type of hose clips (same as original equipment) ⇒ Parts catalogue.*

– Install bottom section of intake manifold ⇒ page 99 .
– Install top section of intake manifold ⇒ page 96 .
– Fill cooling system ⇒ page 152 .

1.6.3 Tightening torque

Component	Nm
Coolant pipe to engine	9

1.7 Removing and installing top coolant pipe (large)

Special tools and workshop equipment required

- Spark plug connector pliers -V.A.G 1922-
- Spring type clip pliers -VAS 5024 A-

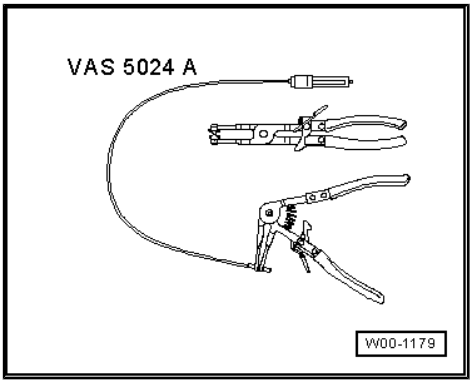

1.7.1 Removing

– Remove top coolant pipe (small) ⇒ page 160 .
– Unclip plenum chamber cover (left-side) -arrows- and remove.

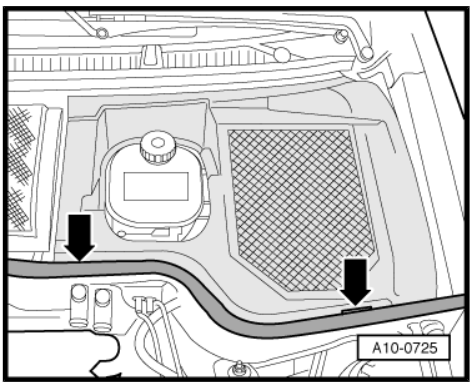

Protected by copyright. Copying for private or commercial purposes, in part or in whole, is not permitted unless authorised by AUDI AG. AUDI AG does not guarantee or accept any liability with respect to the correctness of information in this document. Copyright by AUDI AG.

– Unscrew bolts -1- several turns.
– Unclip plenum chamber cover -2- (right-side) -arrows- and remove.

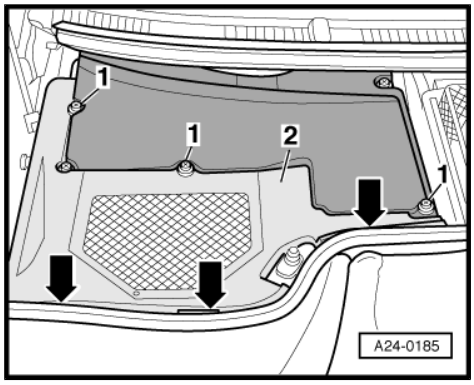

– Remove seal -1- for plenum chamber.
– Unbolt body brace -2- -arrows-.

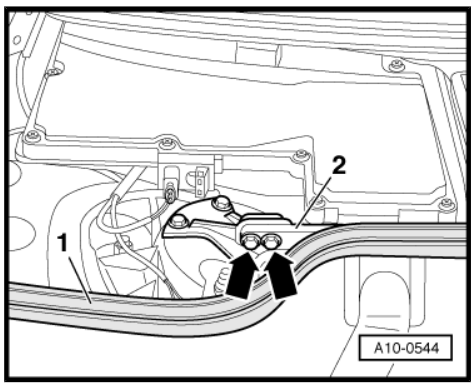

– Unscrew the cross-head screws -arrows-; for the rear left screw, pry off the cover for cowl panel trim -1-.
– Detach cover for electronics box (plenum chamber).

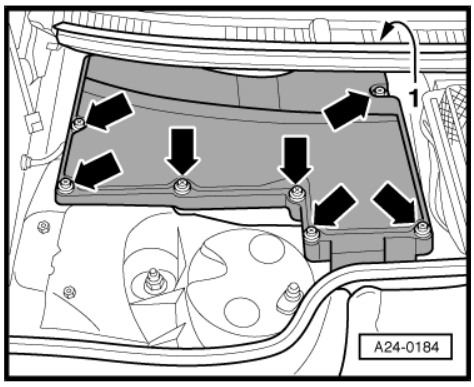

– Remove the retaining clip -arrow-.
– Detach the engine control units -1- and -2-.

Note

The electrical connectors remain attached.

– Release and unplug connector -3- for gearbox control unit.

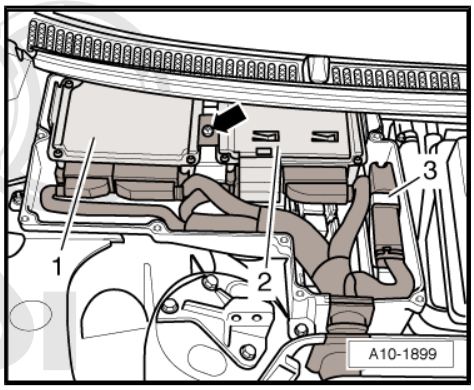

Protected by copyright. Copying for private or commercial purposes, in part or in whole, is not permitted unless authorised by AUDI AG. AUDI AG does not guarantee or accept any liability with respect to the correctness of information in this document. Copyright by AUDI AG.

– Unbolt the retaining plate for the engine control units -arrows-.

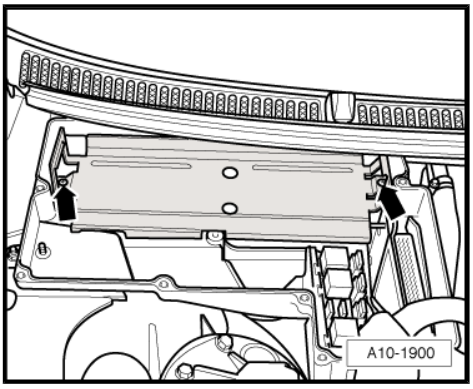

– Unscrew bolts -arrows-.
– Remove relay carrier -1- with wiring harness connected.
– Disconnect all electrical connectors from the connector point -2- using spark plug connector pliers -V.A.G 1922- .

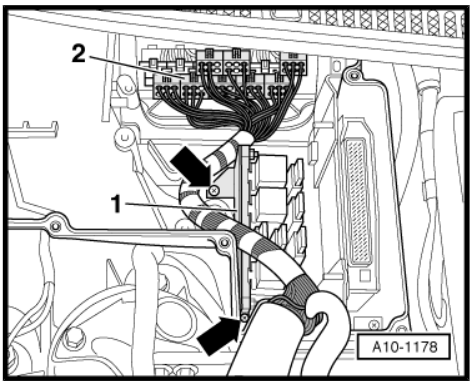

– Unbolt the cable clamp -arrow- at bulkhead.
– Place engine control units with wiring harness attached on top of engine.

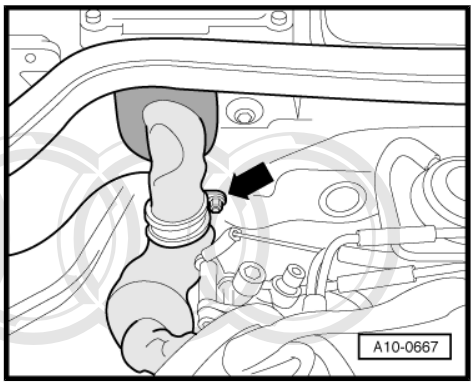

– Unplug electrical connector -1- at coolant temperature sender.
– Unbolt clamp -3- and remove wiring harness from engine.

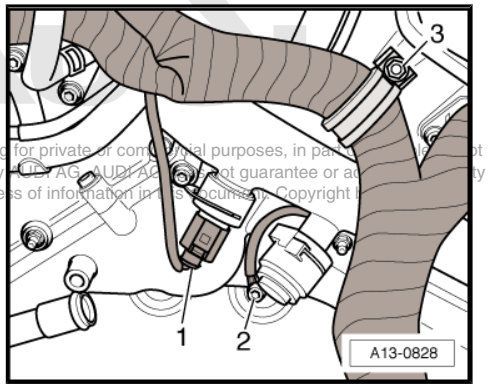

Protected by copyright. Copying for private or commercial purposes, in part or in whole, is not permitted unless authorised by AUDI AG. AUDI AG does not guarantee or accept any liability with respect to the correctness of information in this document. Copyright by AUDI AG.

Note

- *Ignore item marked -2-.*
- *Shown from behind for illustration purposes.*

– Unclip electrical connector -1- at coolant pipe.
– Unscrew bolts -2- and -3-.
– Detach coolant pipe from hoses -arrows-.

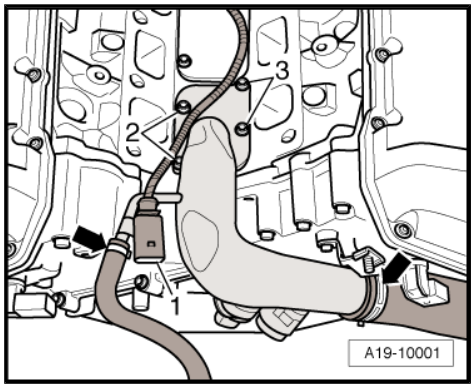

Note

Shown from behind for illustration purposes.

1.7.2 Installing

Installation is carried out in the reverse order; note the following:

Note

- *Renew O-rings.*
- *Secure all hose connections with the correct type of hose clips (same as original equipment) ⇒ Parts catalogue.*

– Make sure that the rear hose clips at coolant pipe do not face upwards, otherwise the wiring harness will become damaged.
– Install top coolant pipe (small) ⇒ page 160 .

Caution

Take note of the correct routing of the electrical wiring at engine ⇒ page 40 .

1.7.3 Tightening torques

Component		Nm
Coolant pipe to engine		9
Clamp to	engine	9
	bulkhead	9
Body brace to suspension turret		23

Protected by copyright. Copying for private or commercial purposes, in part or in whole, is not permitted unless authorised by AUDI AG. AUDI AG does not guarantee or accept any liability with respect to the correctness of information in this document. Copyright by AUDI AG.

1.8 Removing and installing coolant pipe (left-side)

Special tools and workshop equipment required

♦ Hose clip pliers - V.A.G 1921-

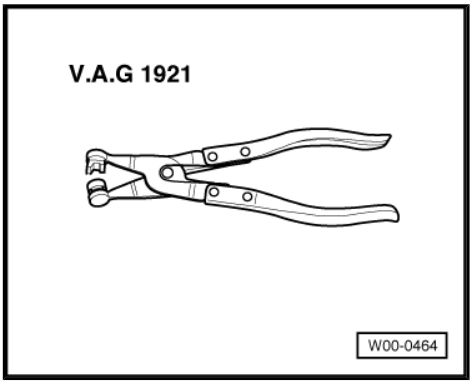

1.8.1 Removing

- Engine removed.

Note

All cable ties which are released or cut open when removing must be fitted in the same position when installing.

Protected by copyright. Copying for private or commercial purposes, in part or in whole, is not permitted unless authorised by AUDI AG. AUDI AG does not guarantee or accept any liability with respect to the correctness of information in this document. Copyright by AUDI AG.

– Unbolt bracket for electrical connectors from left side of intake manifold -arrows-.

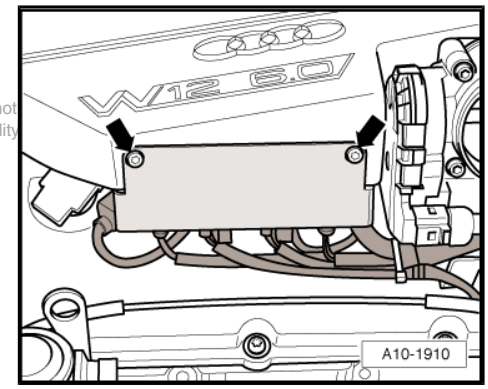

– Disconnect electrical connectors -1 ... 4- going to Lambda probes on left side of engine and move wires clear.

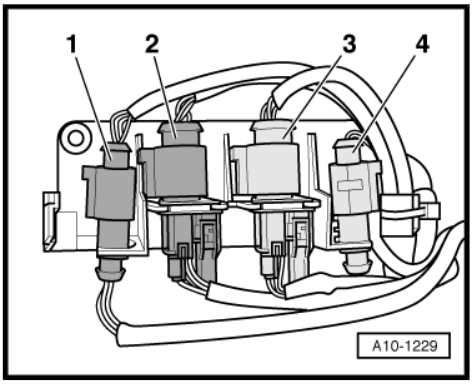

– Unbolt bracket for intermediate pipe (left-side) -arrows-.

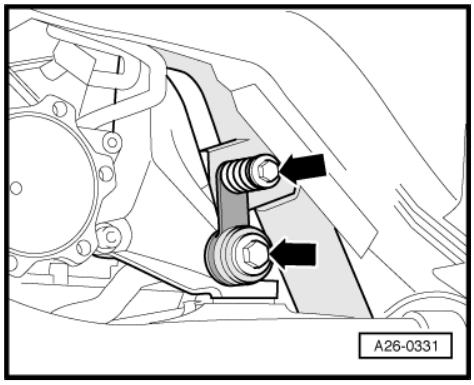

– Unbolt starter catalytic converters (left-side) from exhaust manifolds -arrows-.
– Detach the exhaust pipes (left-side).

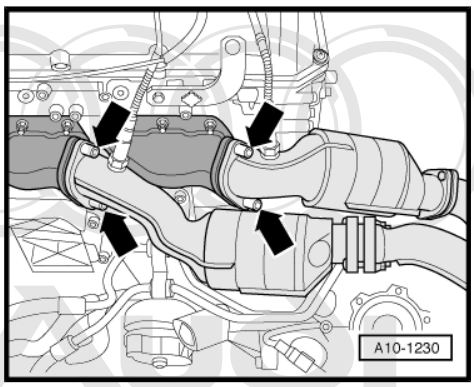

– Detach coolant hoses -2- and -3-.
– Unscrew bolt -1-.

Protected by copyright. Copying for private or commercial purposes, in part or in whole, is not permitted unless authorised by AUDI AG. AUDI AG does not make any representation or warranty or accept any liability with respect to the correctness of information in this document. Copyright by AUDI AG.

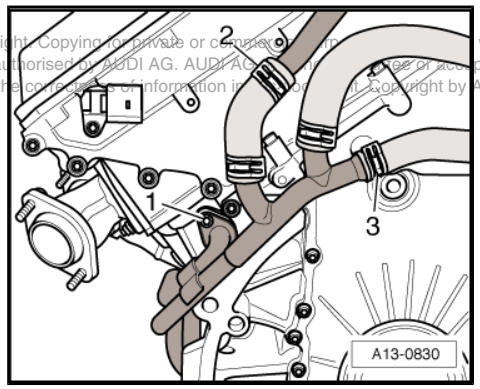

– Disconnect coolant hoses -arrows-.
– Unscrew bolt -1- and remove coolant pipe (left-side).

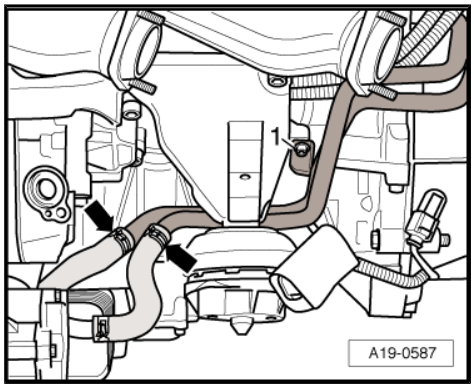

1.8.2 Installing

Installation is carried out in the reverse order; note the following:

Note

- *Renew O-ring.*
- *Secure all hose connections with the correct type of hose clips (same as original equipment) ⇒ Parts catalogue.*
- *Reinstall all cable ties in the same locations when assembling.*

– Secure starter catalytic converters and intermediate pipe at engine ⇒ page 194 .

1.8.3 Tightening torque

Component	Nm
Coolant pipe to engine	9

1.9 Removing and installing coolant pipe (top right)

Special tools and workshop equipment required

- Spark plug connector pliers -V.A.G 1922-
- Spring type clip pliers -VAS 5024 A-

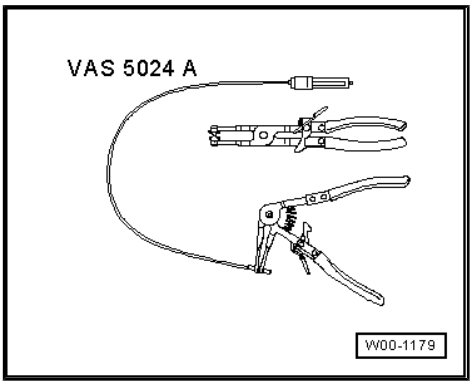

1.9.1 Removing

Note

All cable ties which are released or cut open when removing must be fitted in the same position when installing.

– Drain off coolant ⇒ page 150 .

– Remove cover behind intake manifold -arrows-.

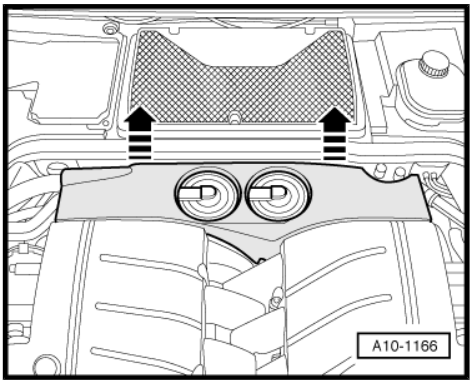

Protected by copyright. Copying for private or commercial purposes, in part or in whole, is not permitted unless authorised by AUDI AG. AUDI AG does not guarantee or accept any liability with respect to the correctness of information in this document. Copyright by AUDI AG.

– Remove cover (right-side) in engine compartment -arrows-.

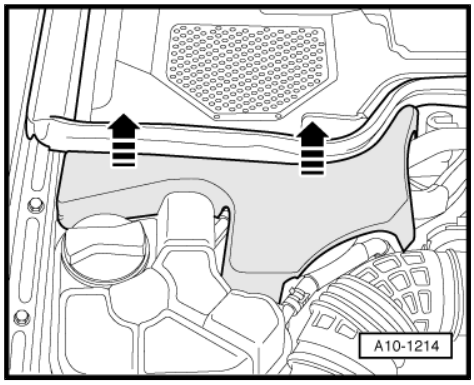

– Remove crankcase breather hose -1-.
– Disconnect coolant hoses -2 ... 4-.

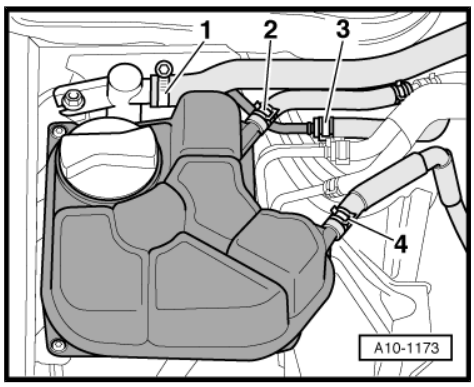

> ⚠ **WARNING**
>
> ***The fuel system is pressurised. Before opening the system place a clean cloth around the connection. Then dissipate pressure by carefully unfastening the connection.***

– Mark fuel supply pipe -2- and fuel return pipe -3- and disconnect.
– Detach the vacuum hose -1- going to activated charcoal filter.

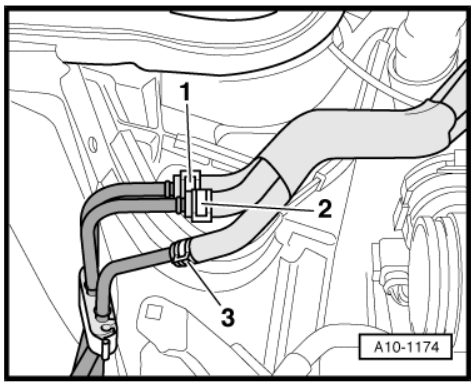

Protected by copyright. Copying for private or commercial purposes, in part or in whole, is not permitted unless authorised by AUDI AG. AUDI AG does not guarantee or accept any liability with respect to the correctness of information in this document. Copyright by AUDI AG.

– Unclip plenum chamber cover (left-side) -arrows- and remove.

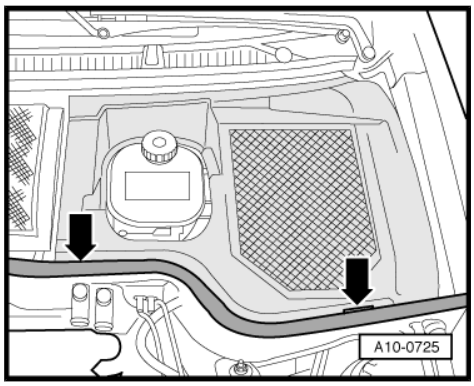

– Unscrew bolts -1- several turns.
– Unclip plenum chamber cover -2- (right-side) -arrows- and remove.

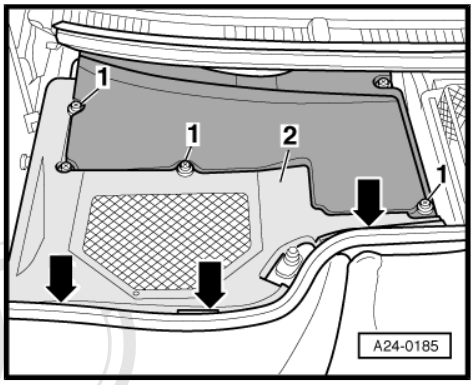

– Remove seal -1- for plenum chamber.
– Unbolt body brace -2- -arrows-.

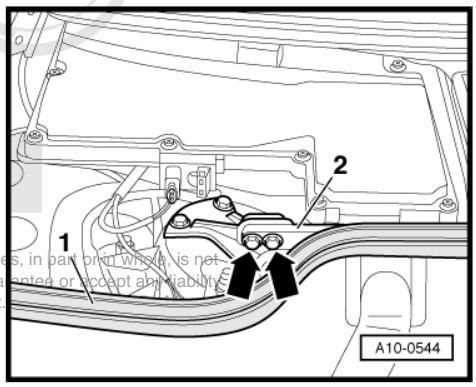

Protected by copyright. Copying for private or commercial purposes, in part or in whole, is not permitted unless authorised by AUDI AG. AUDI AG does not guarantee or accept any liability with respect to the correctness of information in this document.

– Unscrew the cross-head screws -arrows-; for the rear left screw, pry off the cover for cowl panel trim -1-.
– Detach cover for electronics box (plenum chamber).

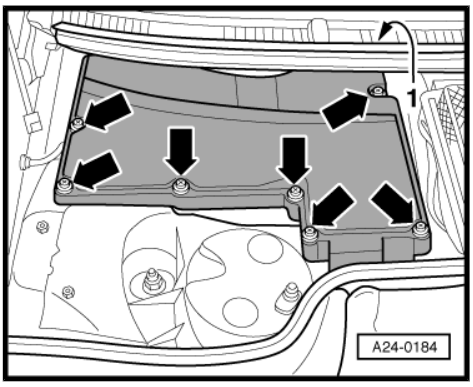

– Remove the retaining clip -arrow-.
– Detach the engine control units -1- and -2-.

Note

The electrical connectors remain attached.

– Release and unplug connector -3- for gearbox control unit.

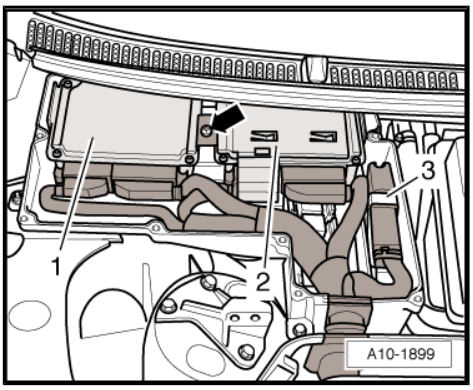

– Unbolt the retaining plate for the engine control units -arrows-.

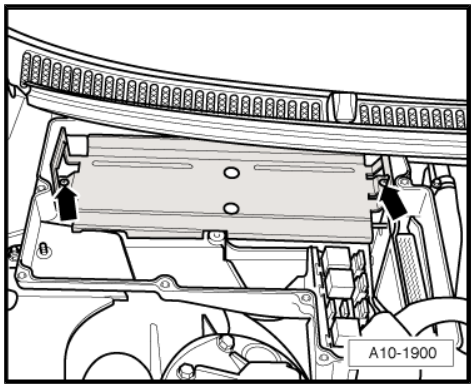

– Unscrew bolts -arrows-.
– Remove relay carrier -1- with wiring harness connected.
– Disconnect all electrical connectors from the connector point -2- using spark plug connector pliers -V.A.G 1922- .

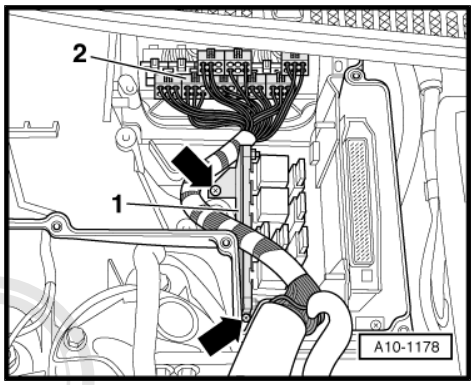

– Unbolt the cable clamp -arrow- at bulkhead.
– Place engine control units with wiring harness attached on top of engine.

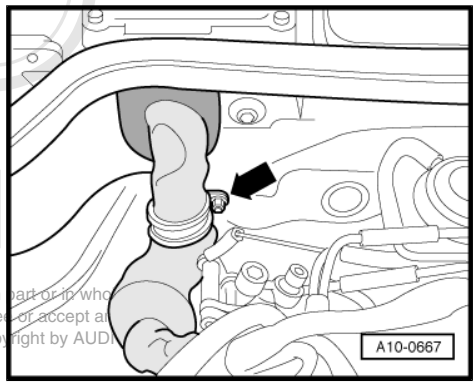

Protected by copyright. Copying for private or commercial purposes, in part or in whole, is not permitted unless authorised by AUDI AG. AUDI AG does not guarantee or accept any liability with respect to the correctness of information in this document. Copyright by AUDI AG.

– Unclip cover -1- for air duct (right-side) on lock carrier in engine compartment.
– Remove air duct -2-.

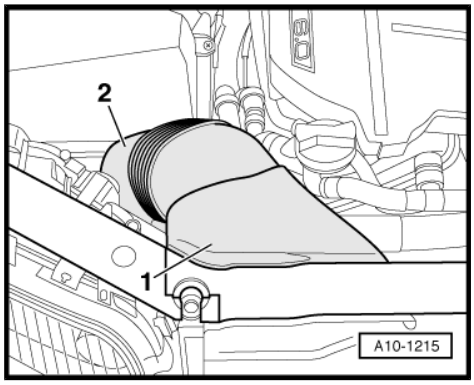

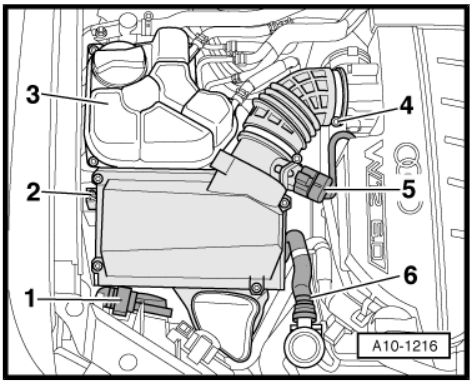

- Remove cover -1- for dipped beam headlights from headlight housing (right-side).
- Disconnect hose -6- at combination valve for secondary air.
- Unbolt coolant expansion tank -3-.
- Unplug electrical connector for coolant shortage indicator switch -F66- at expansion tank (below).
- Detach electrical connector -5- for air mass meter -G70- .
- Detach air intake hose -4- from intake manifold.
- Unscrew the 2 nuts -2-.
- Raise air cleaner housing slightly and unplug electrical connector on rear of air cleaner housing.
- Move electrical wiring at air cleaner housing clear and remove air cleaner housing.
- Remove Lambda probes (right-side) before catalytic converter ⇒ Motronic injection and ignition system (12-cyl.); Rep. Gr. 24 .

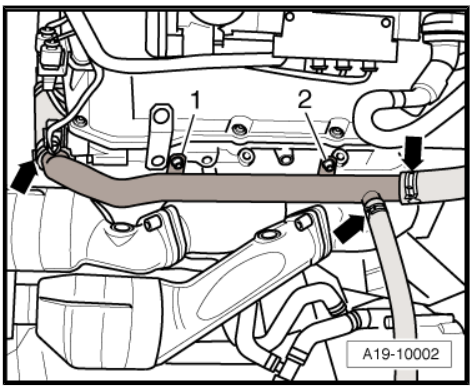

- Unscrew bolts -1- and -2-.
- Detach coolant hoses -arrows- from coolant pipe.
- Detach coolant pipe.

1.9.2 Installing

Installation is carried out in the reverse order; note the following:

Note

- *Secure all hose connections with the correct type of hose clips (same as original equipment) ⇒ Parts catalogue.*
- *Reinstall all cable ties in the same locations when assembling.*

- Make sure that the rear hose clips at coolant pipe do not face upwards, otherwise the wiring harness will become damaged.

Caution

Take note of the correct routing of the electrical wiring at engine ⇒ page 40 .

Protected by copyright. Copying for private or commercial purposes, in part or in whole, is not permitted unless authorised by AUDI AG. AUDI AG does not guarantee or accept any liability with respect to the correctness of information in this document. Copyright by AUDI AG.

- Fill cooling system ⇒ page 152

1.9.3 Tightening torque

Component	Nm
Coolant pipe to engine	22

1.10 Removing and installing coolant pipe (bottom right)

Special tools and workshop equipment required

♦ Hose clip pliers - V.A.G 1921-

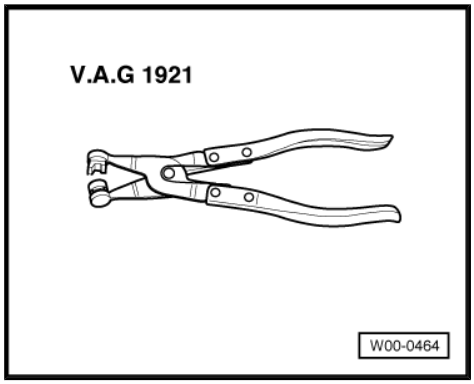

1.10.1 Removing

- Engine removed.

Note

All cable ties which are released or cut open when removing must be fitted in the same position when installing.

– Unbolt bracket for electrical connectors from left side of intake manifold -arrows-.

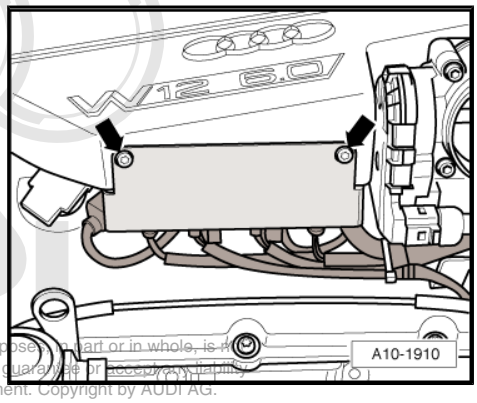

Protected by copyright. Copying for private or commercial purposes, in part or in whole, is not permitted unless authorised by AUDI AG. AUDI AG does not guarantee or accept any liability with respect to the correctness of information in this document. Copyright by AUDI AG.

– Disconnect electrical connectors -1 ... 4- going to Lambda probes on left side of engine and move wires clear.

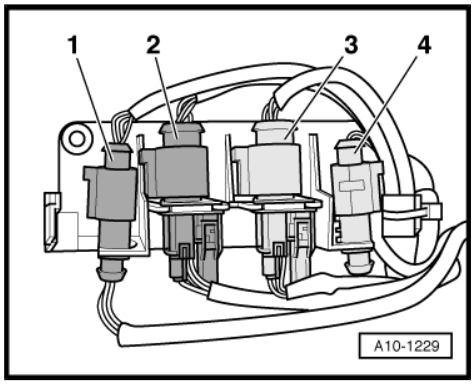

– Unbolt bracket for intermediate pipe (right-side) -arrows-.

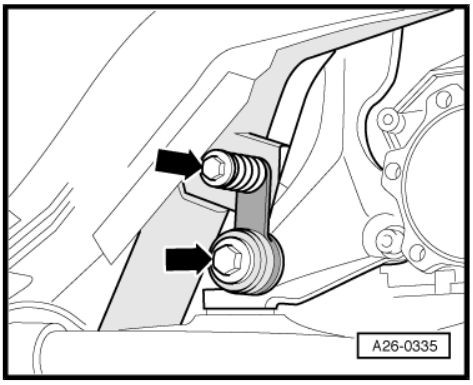

– Unbolt starter catalytic converters (right-side) from exhaust manifolds -arrows-.
– Detach the exhaust pipes (right-side).

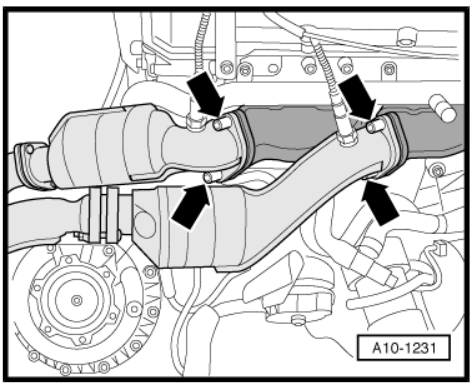

– Detach coolant hoses -1-, -3- and -4-.
– Unscrew bolts -2- and -5- and remove coolant pipe (bottom right).

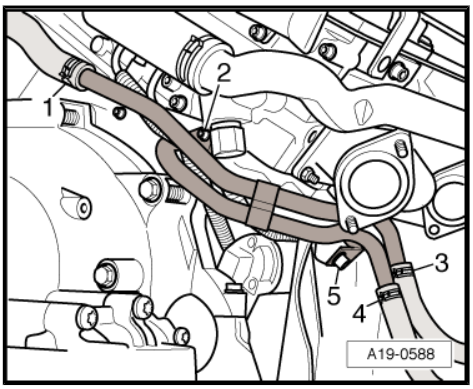

1.10.2 Installing

Installation is carried out in the reverse order; note the following:

Note

- *Secure all hose connections with the correct type of hose clips (same as original equipment) ⇒ Parts catalogue.*
- *Reinstall all cable ties in the same locations when assembling.*

– Secure starter catalytic converters and intermediate pipe at engine ⇒ page 194 .

Caution

Take note of the correct routing of the electrical wiring at engine *⇒ page 40* *.*

Protected by copyright. Copying for private or commercial purposes, in part or in whole, is not permitted unless authorised by AUDI AG. AUDI AG does not guarantee or accept any liability with respect to the correctness of information in this document. Copyright by AUDI AG.

1.10.3 Tightening torque

Component	Nm
Coolant pipe to engine	9

1.11 Removing and installing radiator

Special tools and workshop equipment required

- Hose clamps for hoses up to 25 mm Ø -3094-

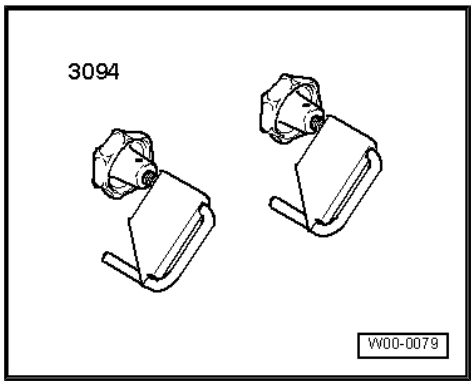

- Drip tray -V.A.G 1306-

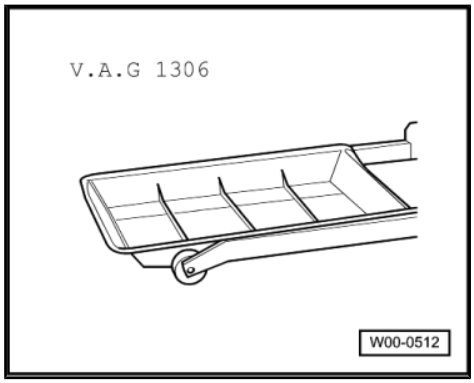

- Drip tray

1.11.1 Removing

Note

Protected by copyright. Copying for private or commercial purposes, in part or in whole, is not permitted unless authorised by AUDI AG. AUDI AG does not make any representation or accept any liability with respect to the correctness of information in this document. Copyright by AUDI AG.

- *Collect drained coolant in a clean container for re-use or disposal.*
- *The coolant must be drained off completely if the radiator is renewed.*

WARNING

Hot steam/hot coolant may escape when opening expansion tank; cover filler cap with cloth and open carefully.

– Open filler cap on coolant expansion tank.

– Vehicles with auxiliary heater: remove bolts -arrows- securing exhaust pipe for auxiliary/additional heater to noise insulation.

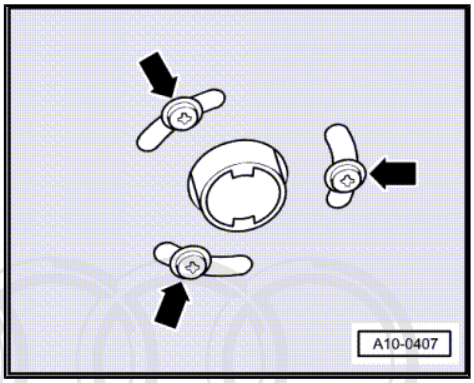

– Loosen quick release fasteners -1- and remove noise insulation.
– Loosen both front wheel housing liners at front.

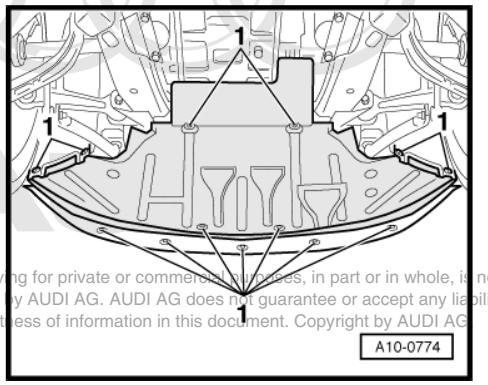

Protected by copyright. Copying for private or commercial purposes, in part or in whole, is not permitted unless authorised by AUDI AG. AUDI AG does not guarantee or accept any liability with respect to the correctness of information in this document. Copyright by AUDI AG

– Release retaining clips -1- and -2- and remove air intake grille (left and right).

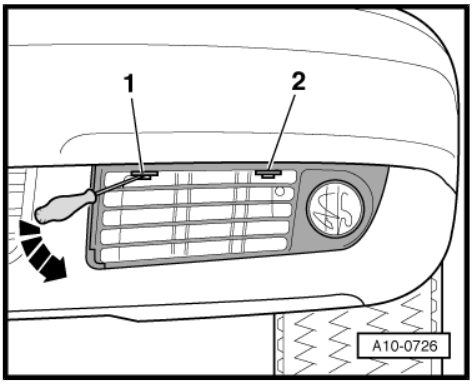

– Unscrew the bolt in the opening -arrow- in the bumper (left and right).

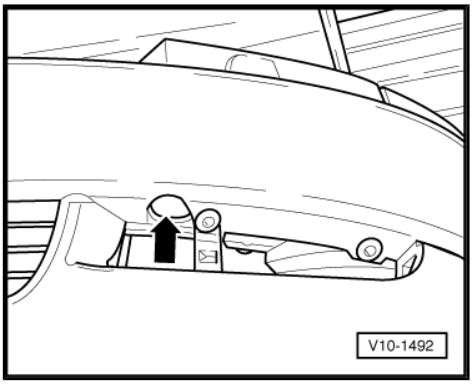

– Pull bumper forwards slightly and disconnect electrical connector -1-.
– Clamp off hose for headlight washer system before T-connection with hose clamp -3094- .
– Detach hose at T-connection.
– Remove the bumper.

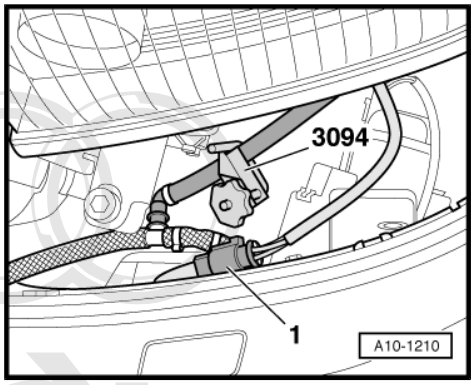

– Place drip tray -V.A.G 1306- below engine.
– Disconnect coolant hose at bottom of oil cooler -arrow- and drain off coolant.

Protected by copyright. Copying for private or commercial purposes, in part or in whole, is not permitted unless authorised by AUDI AG. AUDI AG does not guarantee or accept any liability with respect to the correctness of information in this document. Copyright by AUDI AG.

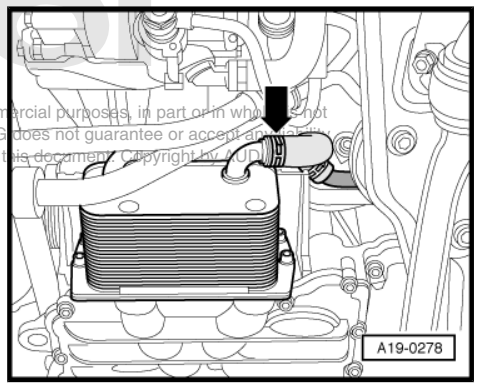

– Detach both coolant hoses (bottom right) -1- and -2- at radiator and drain off coolant.
– Loosen nuts -3- on both sides of the radiator a few turns.

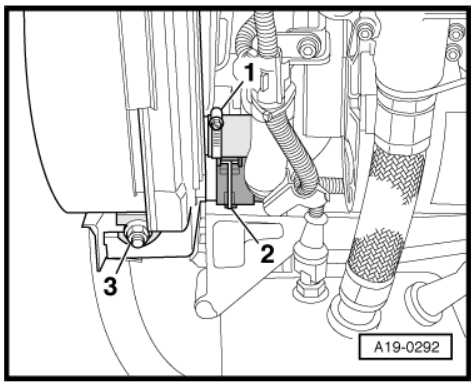

– Place drip tray underneath.
– Unbolt ATF line -arrow- from bottom of radiator.

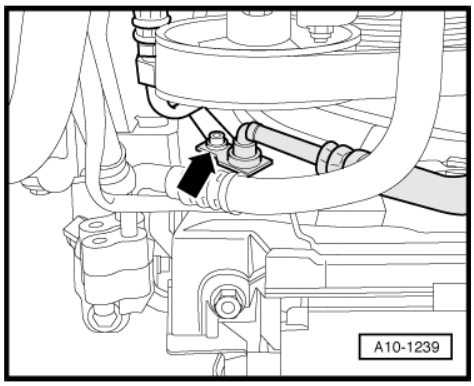

Note

Note the rules for cleanliness when working on the automatic gearbox ⇒ Automatic gearbox 01L, four-wheel drive; Rep. Gr. 37 .

– Unclip cover -1- for air duct (left-side) on lock carrier in engine compartment.
– Remove air duct -2-.
– Remove front air duct at lock carrier.

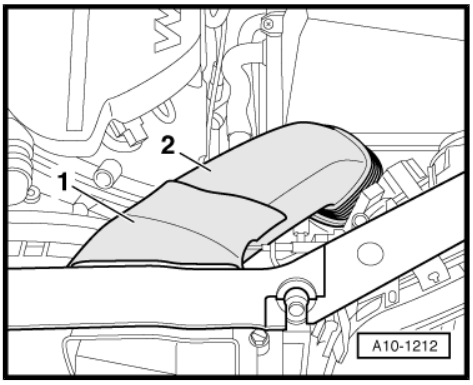

– Unbolt ATF line from top of radiator -arrow-.

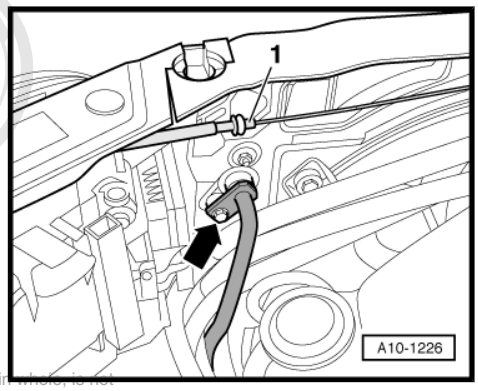

Note

- *Note the rules for cleanliness when working on the automatic gearbox ⇒ Automatic gearbox 01L, four-wheel drive; Rep. Gr. 37 .*
- *Ignore item marked -1-.*

Protected by copyright. Copying for private or commercial purposes, in part or in whole, is not permitted unless authorised by AUDI AG. AUDI AG does not guarantee or accept any liability with respect to the correctness of information in this document. Copyright by AUDI AG.

– Unplug electrical connectors -arrows-.

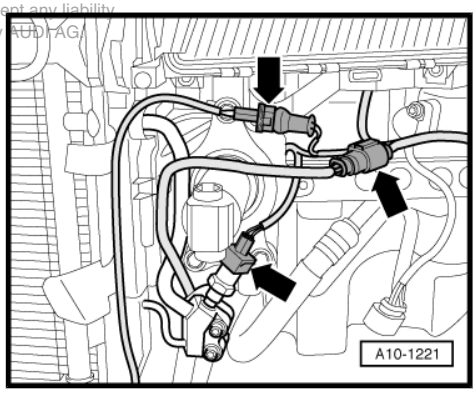

– Remove air ducts on left -1- and on right -2- at radiator.
– Remove bottom air duct -3-.

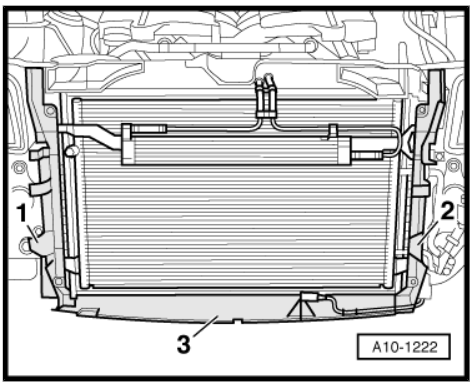

– Unscrew bolts -1- and -2-.
– Pull cooler for power steering hydraulic fluid slightly forward (the lines remain connected).
– Pull condenser upwards out of brackets and swing downwards.

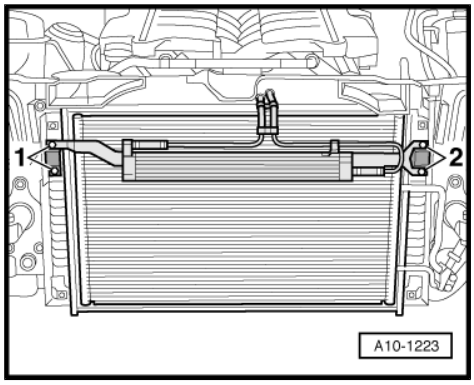

– Unclip cover -1- for air duct (right-side) on lock carrier in engine compartment.
– Remove air duct -2-.
– Remove front air duct at lock carrier.

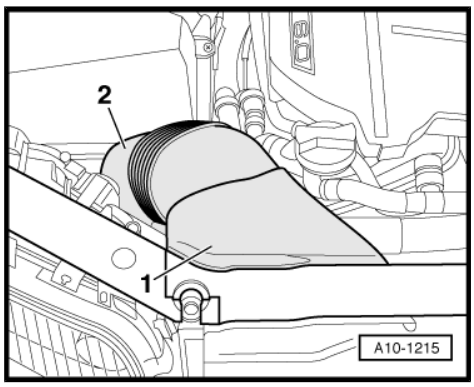

– Detach coolant hoses -1- and -3- at radiator.
– Remove securing nuts -2- for radiator on left and right.
– Pivot top surface of radiator forwards and disengage downwards.

Copyright by AUDI AG. Reproduction of these documents or extracts thereof for other purposes, in part or in whole, is not permitted unless authorised by AUDI AG. AUDI AG does not guarantee or accept any liability with respect to the correctness of information in these documents. Copyright by AUDI AG.

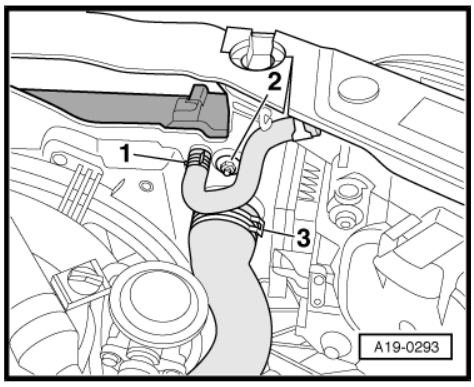

1.11.2 Installing

Installation is carried out in the reverse order; note the following:

Note

Renew O-rings.

– Secure ATF pipes to ATF cooler ⇒ Automatic gearbox 01L, four-wheel drive; Rep. Gr. 37 .
– Check ATF level ⇒ Automatic gearbox 01L, four-wheel drive; Rep. Gr. 37 .
– Install front bumper ⇒ General body repairs, exterior; Rep. Gr. 63 .
– Fill cooling system ⇒ page 152 .

1.11.3 Tightening torques

Component		Nm
Radiator to lock carrier	M 6	8
	M 8	20
Condenser to radiator		8

1.12 Checking cooling system for leaks

Special tools and workshop equipment required

- Cooling system tester -V.A.G 1274-
- Adapter -V.A.G 1274/8-
- Adapter -V.A.G 1274/9-

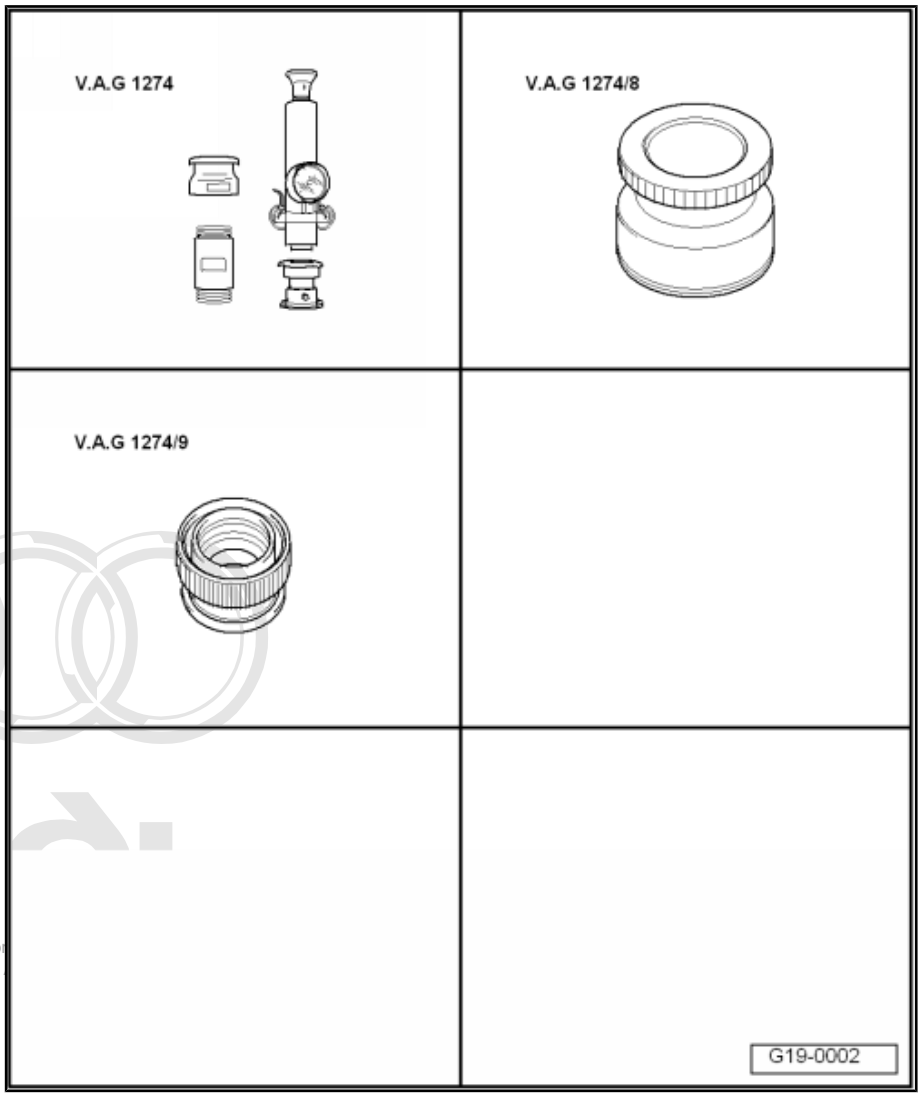

Protected by copyright. Copying for private or co
permitted unless authorised by AUDI AG. AUDI
with respect to the correctness of information

1.12.1 Test requirement

- Engine must be warm.

1.12.2 Test sequence

WARNING

Hot steam/hot coolant may escape when opening expansion tank; cover filler cap with cloth and open carefully.

– Open filler cap on coolant expansion tank.

– Attach cooling system tester -V.A.G 1274- with adapter -V.A.G 1274/8- to expansion tank.

– Use hand pump on cooling system tester to create a pressure of approx. 1.0 bar.

If the pressure drops:

– Trace leak and repair.

Protected by copyright. Copying for private or commercial purposes, in part or in whole, is not permitted unless authorised by AUDI AG. AUDI AG does not guarantee or accept any liability with respect to the correctness of information in this document. Copyright by AUDI AG.

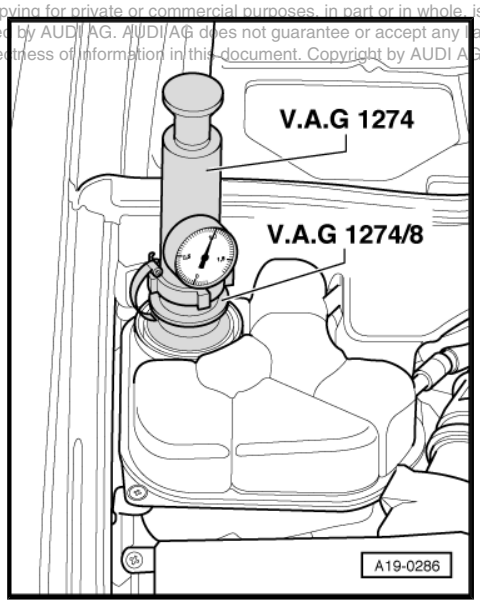

1.12.3 Checking pressure relief valve in filler cap

– Attach cooling system tester -V.A.G 1274- with adapter -V.A.G 1274/9- to filler cap.

– Use hand pump on cooling system tester to create pressure.

• The pressure relief valve should open at pressure of 1.6 ... 1.8 bar.

If the relief valve does not open as described:

– Renew the filler cap.

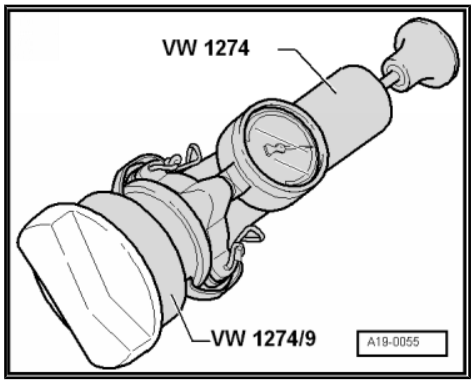

1.13 Hydraulic fan - exploded view of components

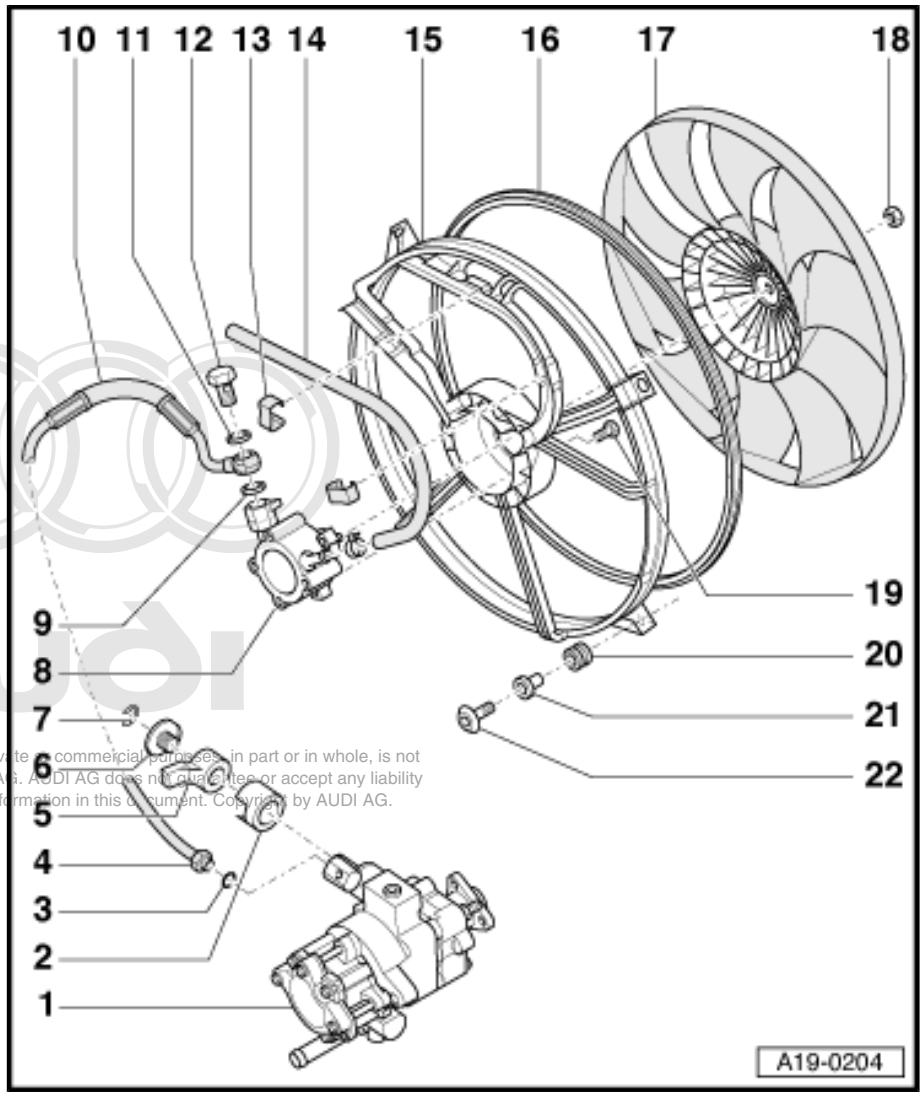

1 - Power steering pump
- ❑ For power steering and hydraulic fan
- ❑ Removing and installing ⇒ page 186

2 - Sleeve

3 - Seal
- ❑ Renew

4 - 50 Nm

5 - Radiator fan valve -N313-
- ❑ Checking ⇒ page 184

6 - Washer

7 - Circlip

8 - Motor for hydraulic fan
- ❑ Renew if leaking
- ❑ To unbolt fan ring ⇒ Item 15 (page 181) , first remove fan ⇒ Item 17 (page 181)

9 - Seal
- ❑ Renew

Protected by copyright. Copying for private or commercial purposes, in part or in whole, is not permitted unless authorised by AUDI AG. AUDI AG does not guarantee or accept any liability with respect to the correctness of information in this document. Copyright by AUDI AG.

10 - Supply pipe

11 - Seal
- ❑ Renew

12 - Banjo bolt -50 Nm-
- ❑ With radiator fan drive circuit temperature sender -G382-
- ❑ When tightening, counterhold on hexagon flats of motor housing

13 - Retaining clip
- ❑ For return hose

14 - Return hose

15 - Fan ring

16 - Spacer

17 - Fan

18 - Special nut with left-hand thread, 21 Nm

19 - 8 Nm

20 - Rubber grommet

21 - Sleeve

22 - 8 Nm

1.14 Removing and installing hydraulic fan

Special tools and workshop equipment required

- Hose clamps for hoses up to 25 mm Ø -3094-

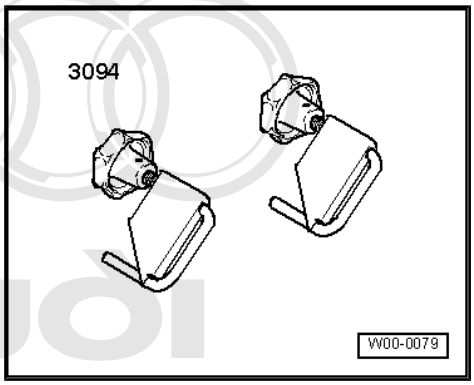

Protected by copyright. Copying for private or commercial purposes, in part or in whole, is not permitted unless authorised by AUDI AG. AUDI AG does not guarantee or accept any liability with respect to the correctness of information in this document. Copyright by AUDI AG.

- Drip tray

1.14.1 Removing

Note

All cable ties which are released or cut open when removing must be fitted in the same position when installing.

– Pull lock carrier forwards ⇒ page 42 .

– Place a drip tray underneath.

– Detach electrical connector -arrow- at radiator fan drive circuit temperature sender -G382- and move wire clear.

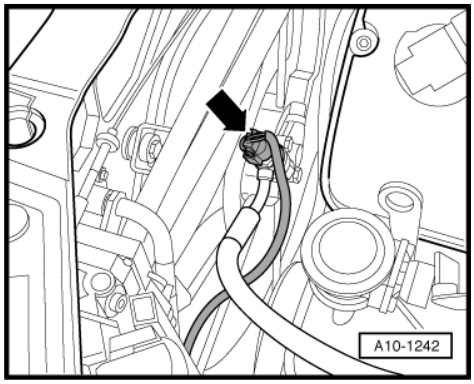

– Clamp off the hydraulic lines to the hydraulic fan using hose clamps -3094- .

– Detach hydraulic lines at hydraulic fan -arrows-.

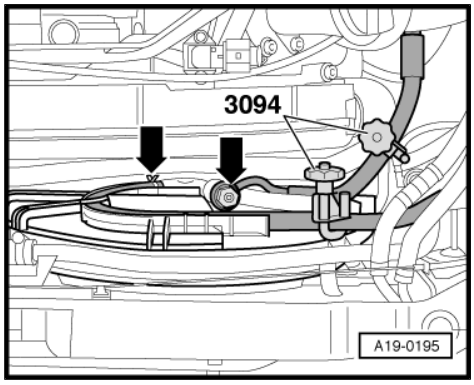

– Unclip the electrical wiring harness from the fan ring -arrows-.
– Unscrew bolts -1 ... 4- and remove hydraulic fan.

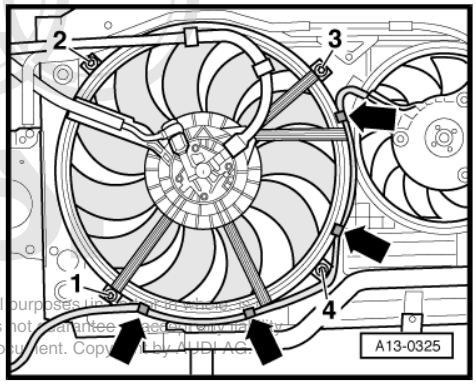

Protected by copyright. Copying for private or commercial purposes, in part or in whole, is not permitted unless authorised by AUDI AG. AUDI AG does not guarantee or assume any liability with respect to the correctness of information in this document. Copyright by AUDI AG.

1.14.2 Installing

Installation is carried out in the reverse order; note the following:

Note

Replace seals.

– Install lock carrier ⇒ page 47 .
– Top up power steering fluid and bleed steering system: ⇒ Running gear, front-wheel drive and four-wheel drive; Rep. Gr. 48 .

1.14.3 Tightening torques

Component	Nm
Hydraulic fan to lock carrier	8
Hydraulic line to hydraulic fan	50

1.15 Checking radiator fan valve -N313-

Special tools and workshop equipment required

- Hand-held multimeter - V.A.G 1526 A-
- Voltage tester - V.A.G 1527 B-
- Adapter set -V.A.G 1594 A-
- Test box -V.A.G 1598/31-
- Vehicle diagnostic, testing and information system - VAS 5051- with diagnosis lead - VAS 5051/1-

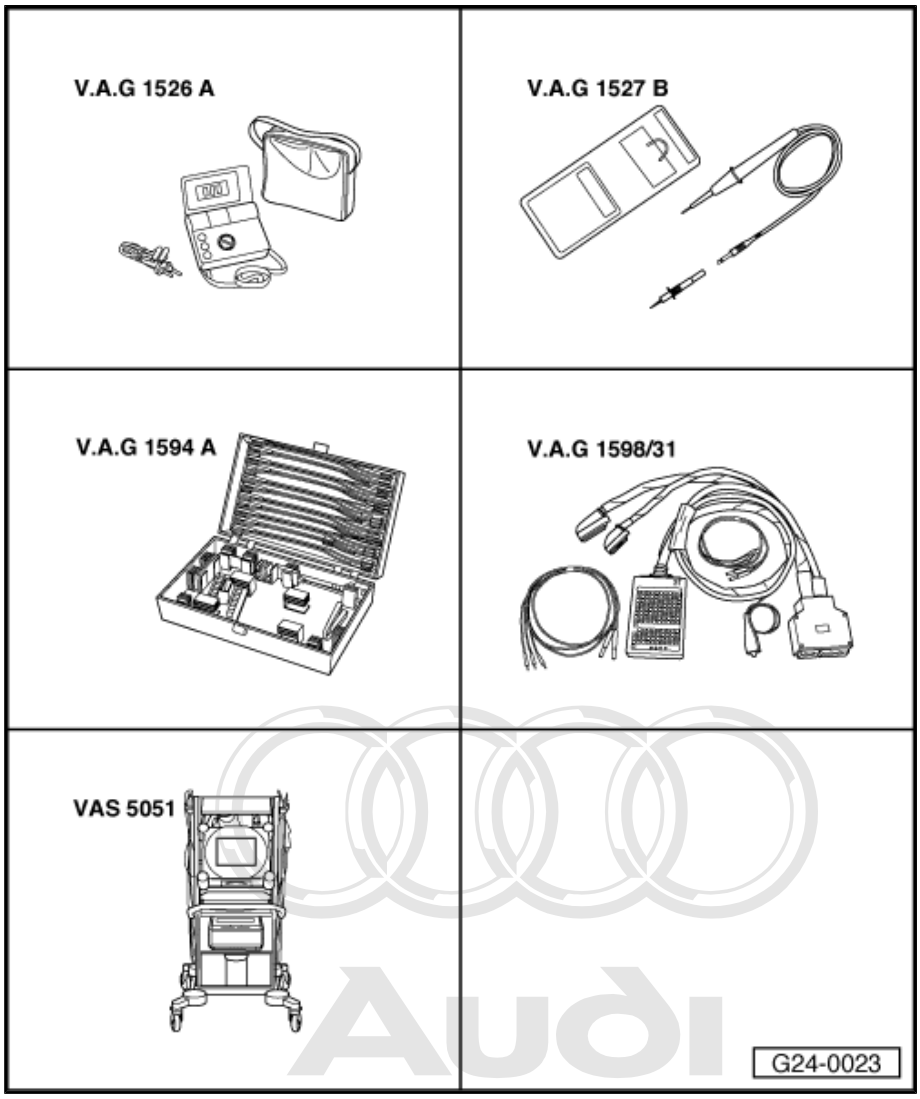

Protected by copyright. Copying for private or commercial purposes, in part or in whole, is not permitted unless authorised by AUDI AG. AUDI AG does not guarantee or accept any liability with respect to the correctness of information in this document. Copyright by AUDI AG.

1.15.1 Test sequence

– Loosen quick release fasteners -1- and remove noise insulation.

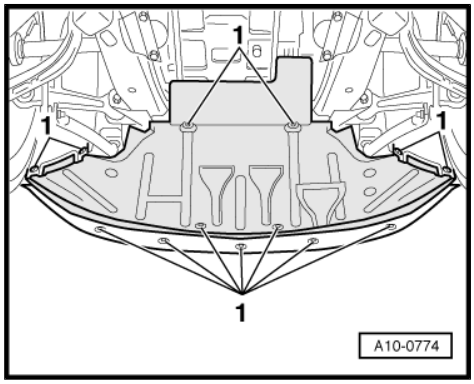

– Unplug electrical connector -arrow-.

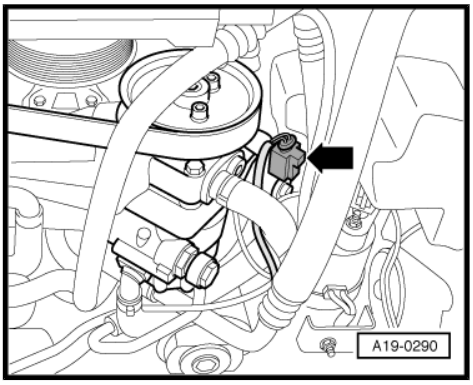

1.15.2 Checking internal resistance

– Connect multimeter to valve to measure resistance.

• Specification: 9 ... 12 Ω

If specification is not reached:

– Renew radiator fan valve -N313- .

1.15.3 Checking voltage supply

– Connect up multimeter as follows to measure voltage.

Connector Contact	Measure against
-1-	Engine earth

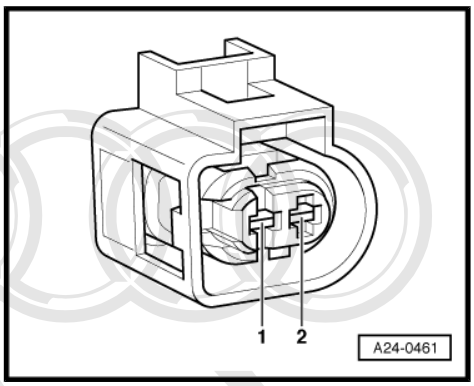

– Switch on ignition.

• Specification: approx. battery voltage

If specification is not reached:

– Use current flow diagram to check wiring for open circuit.

– If necessary repair wiring connection.

1.15.4 Checking activation

• Vehicle diagnostic, testing and information system -VAS 5051- with diagnosis lead -VAS 5051/1- is connected; vehicle self-diagnosis and vehicle system “01 - Engine electronics” is selected. When doing this the ignition must be switched on.

• Coolant temperature at least 80°C.

• Selector lever in position “P”.

– Connect voltage tester -V.A.G 1527 B- between contacts -1- and -2-.

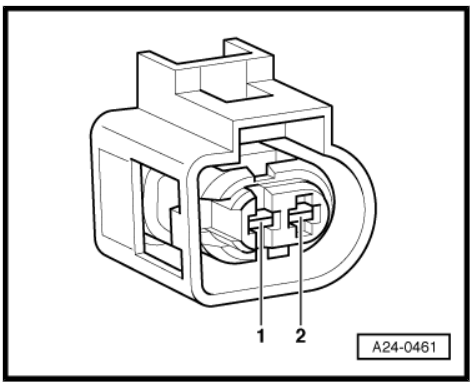

Copyright. Copying for private or commercial purposes, in part or in whole, is not permitted unless authorised by AUDI AG. AUDI AG does not guarantee or accept any liability with respect to the correctness of information in this document. Copyright by AUDI AG.

– Under selection menu -1- select the diagnostic function “03 - Final control diagnosis”.

– Press the button ⇨ until the radiator fan valve -N313- is actuated.

• LED should flash slowly.

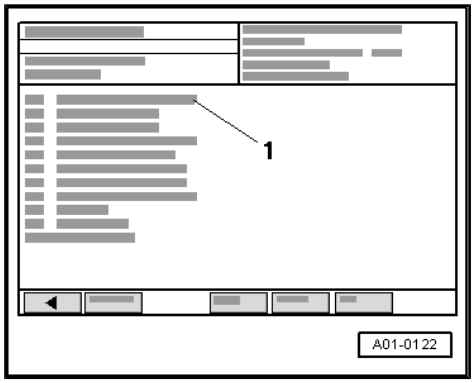

Note

Voltage testers with a low current draw do not go out completely between activation signals from engine control unit, but continue to glow slightly and become distinctly brighter on activation.

– Exit function “03 - Final control diagnosis” by pressing the ⇦ key.

– Press the diagnostic function “06 - end output” and switch off the ignition.

If LED does not react as described:

– Connect test box -V.A.G 1598/31- to connectors of wiring harness with black covering for engine control unit -J623- (in electronics box, left-side); the engine control unit should not be connected. Connect earth clip of test box to earth ⇒ Motronic injection and ignition system (12-cyl.); Rep. Gr. 24 .

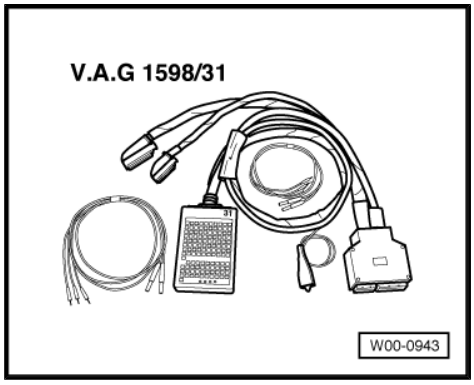

Caution

To prevent damage to the electronic components, select appropriate measuring range before connecting the measuring cables and observe the test requirements.

– Check for open circuit in the following wiring connection:

Connector Contact	Test box -V.A.G 1598/31- Socket
-1-	104
-2-	1 or 2

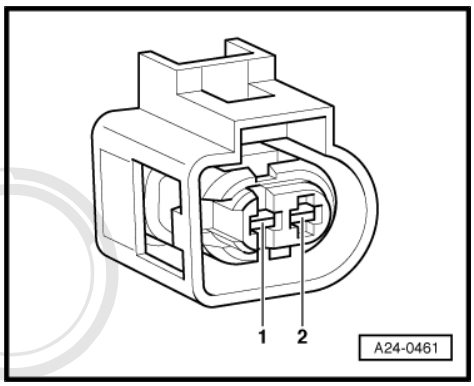

– If necessary repair wiring connection.

1.16 Removing and installing pump for power steering and hydraulic fan

Special tools and workshop equipment required

♦ Drip tray

Protected by copyright. Copying for private or commercial purposes, in part or in whole, is not permitted unless authorised by AUDI AG. AUDI AG does not guarantee or accept any liability with respect to the correctness of information in this document. Copyright by AUDI AG.

1.16.1 Removing

Note

All cable ties which are released or cut open when removing must be fitted in the same position when installing.

– Discharge the refrigerant system ⇒ Air conditioner system - with refrigerant R134a .

– Pull lock carrier forwards ⇒ page 42 .

Note

- *Loosen bolts of pulley for power steering pump with poly V-belt still fitted.*
- *Before removing, mark direction of rotation of poly V-belt with chalk or felt-tipped pen. If the belt runs in the opposite direction when it is refitted, this can cause breakage.*

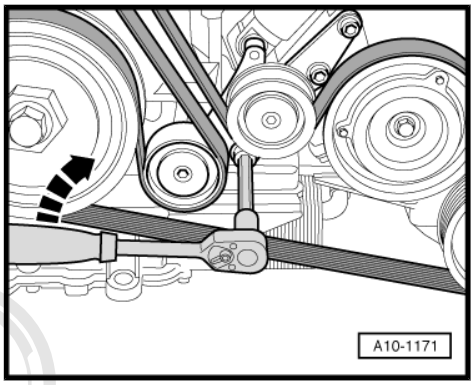

– To slacken the poly V-belt turn the tensioner in the direction of the arrow.

– Remove poly V-belt and release tensioner.

– Remove pulley for power steering pump -arrows-.

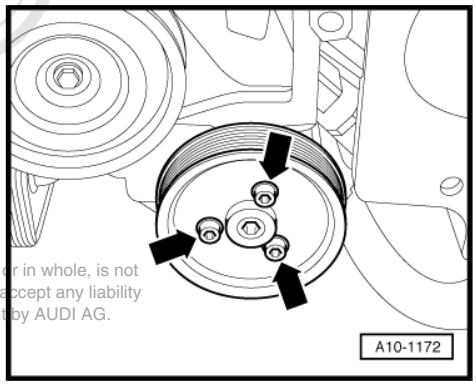

Protected by copyright. Copying for private or commercial purposes, in part or in whole, is not permitted unless authorised by AUDI AG. AUDI AG does not guarantee or accept any liability with respect to the correctness of information in this document. Copyright by AUDI AG.

– Unplug electrical connector -2- at radiator fan valve -N313- .

– Move wiring clear.

– Push off circlip -3- and remove radiator fan valve -N313- .

– Place drip tray underneath.

– Unbolt hydraulic pressure pipes -4- and -6-.

– Detach coolant hoses -1- and -5-.

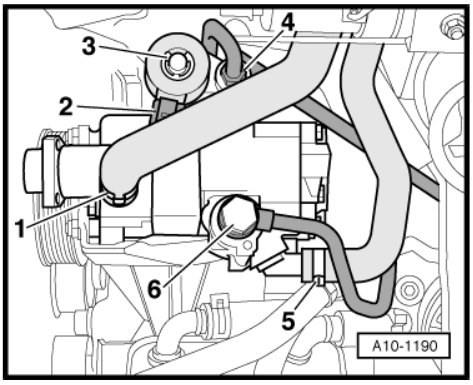

– Remove reinforcement for refrigerant line -arrows-.

– Remove refrigerant line from air conditioner compressor.

Note

The refrigerant line reinforcement is shown in the illustration with power steering pump removed.

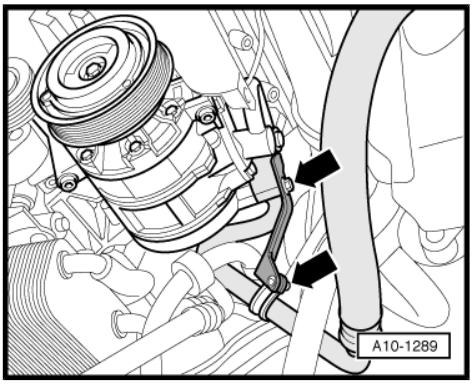

– Unscrew rear hexagon socket head bolt ⇒ Item 26 (page 49) for power steering pump.
– Unscrew the 2 nuts -arrows-.
– Press power steering pump backwards and remove downwards.

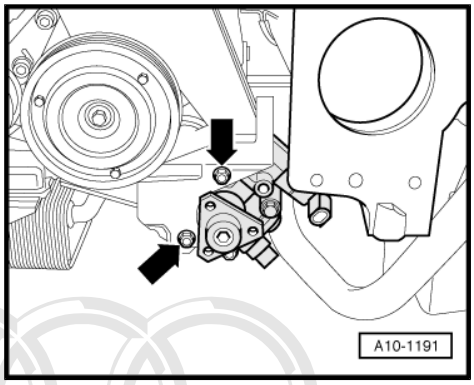

1.16.2 Installing

Installation is carried out in the reverse order; note the following:

Note

Renew seals and gaskets.

– Check alignment of pulleys for power steering pump and air conditioner compressor ⇒ page 50 .
– Install poly V-belt ⇒ page 50 .
– Charge the refrigerant system ⇒ Air conditioner system - with refrigerant R134a .
– Top up power steering fluid and bleed steering system: ⇒ Running gear, front-wheel drive and four-wheel drive; Rep. Gr. 48

Protected by copyright. Copying for private or commercial purposes, in part or in whole, is not permitted unless authorised by AUDI AG. AUDI AG does not guarantee or accept any liability with respect to the correctness of information in this document. Copyright by AUDI AG.

1.16.3 Tightening torques

Component	Nm
Power steering pump to bracket	22
Pulley to power steering pump	22
Refrigerant line with reinforcement to air conditioner compressor	25
Retaining clip for refrigerant line to reinforcement	8
Hydraulic pressure line for steering gear to power steering pump	50
Hydraulic pressure line for hydraulic fan to power steering pump	50

1.17 Checking electrical radiator fan -V7- and activation

Special tools and workshop equipment required

- Hand-held multimeter -V.A.G 1526 A-
- Voltage tester -V.A.G 1527 B-
- Adapter set -V.A.G 1594 A-
- Vehicle diagnostic, testing and information system -VAS 5051- with diagnosis lead -VAS 5051/1-

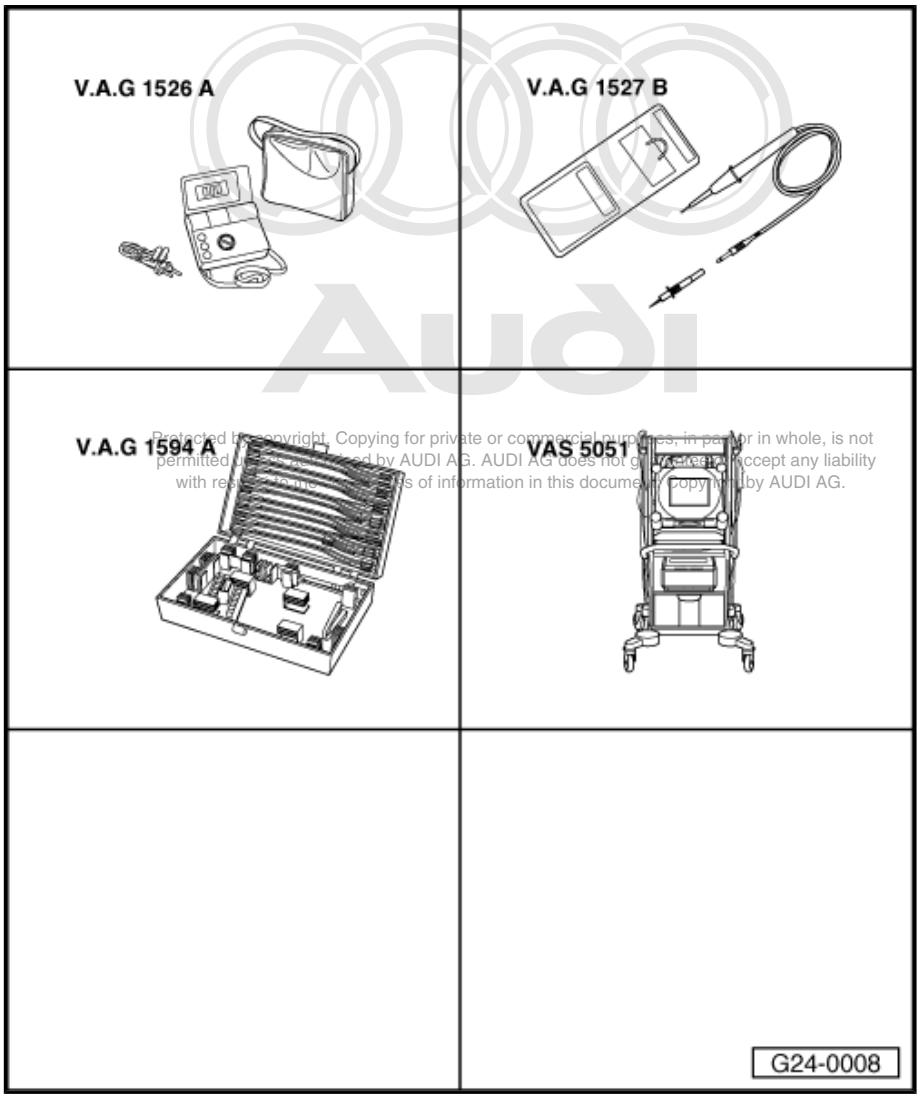

Protected by copyright. Copying for private or commercial purposes, in part or in whole, is not permitted unless authorised by AUDI AG. AUDI AG does not guarantee or accept any liability with respect to the correctness of information in this document. Copyright by AUDI AG.

1.17.1 Test requirement

- Radiator fan fuses OK ⇒ Current flow diagrams, Electrical fault finding and Fitting locations

1.17.2 Test sequence

- Vehicle diagnostic, testing and information system -VAS 5051- with diagnosis lead -VAS 5051/1- is connected; vehicle self-diagnosis and vehicle system “01 - Engine electronics” is selected. When doing this the ignition must be switched on.

Note

The final control diagnosis can test the function of the radiator fan in one of the three different speed settings.

– Under selection menu -1- select the diagnostic function “03 - Final control diagnosis”.

– Press the button ⇨ until the radiator fan control 1 is activated.

• The electrical radiator fan should run in intervals.

– Exit function “03 - Final control diagnosis” by pressing the ⇦ key, and switch off the ignition.

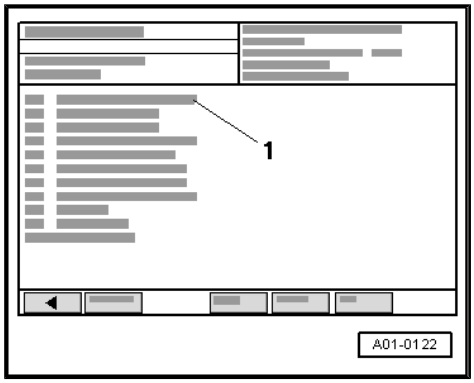

A - if the electrical radiator fan does not run at all:

– Remove front bumper ⇒ General body repairs, exterior; Rep. Gr. 63 .

– Unplug the electrical connector -arrow- to the radiator fan in front of left-side wheel housing.

– Connect voltage tester -V.A.G 1527 B- between contacts 1 and 2 of the supply connector.

• Vehicle diagnostic, testing and information system -VAS 5051- with diagnosis lead -VAS 5051/1- is connected; vehicle self-diagnosis and vehicle system “01 - Engine electronics” is selected. When doing this the ignition must be switched on.

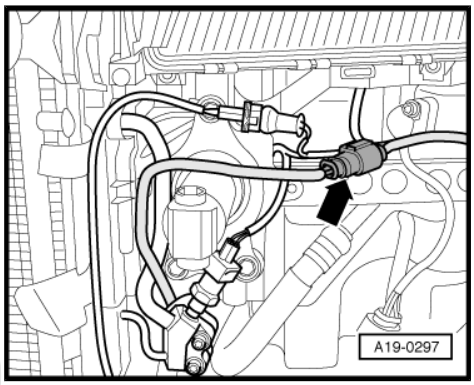

– Under selection menu -1- select the diagnostic function “03 - Final control diagnosis”.

– Press the button ⇨ until the radiator fan control 1 is activated.

• LED should flash slowly.

– Exit function “03 - Final control diagnosis” by pressing the ⇦ key, and switch off the ignition.

If LED flashes:

– Renew the electrical radiator fan.

Protected by copyright. Copying for private or commercial purposes, in part or in whole, is not permitted unless authorised by AUDI AG. AUDI AG does not guarantee or accept any liability with respect to the correctness of information in this document. Copyright by AUDI AG.

If the LED does not flash:

– Check the voltage supply and earth connection of the electrical radiator fan using current flow diagram.

B - if the electrical radiator fan does not run at one or two speeds:

– Carry out the following checks:

– Remove driver's storage compartment ⇒ General body repairs, interior; Rep. Gr. 68 .

– Unscrew ABS control unit -1- and move clear to one side with the wires attached.

– Unbolt the bracket -2- for ABS control unit and relays.

– Check voltage supply and activation of relays -3 ... 5- using current flow diagram.

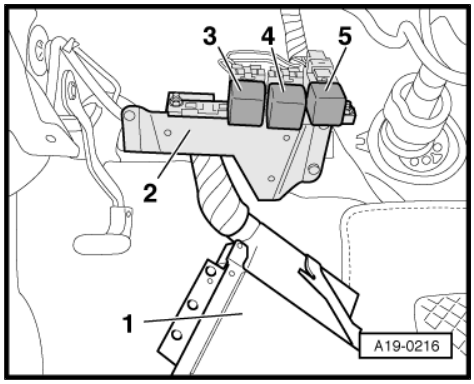

– Loosen quick release fasteners -1- and remove noise insulation.

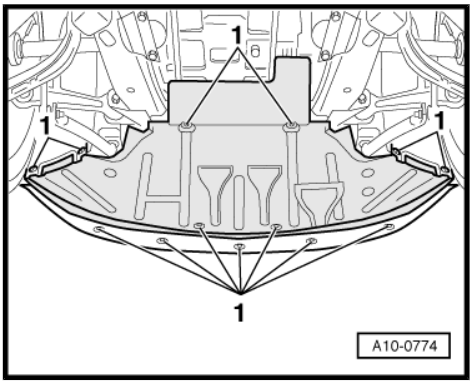

– Loosen the wheel housing liner at the front -arrow-.

– Unscrew electrical wires at connections -E1 … E3- on radiator fan series resistor -N39- .

– Connect multimeter between contacts -E1- and -E2- to measure resistance.

• Specification: 0.45 ... 0.55 Ω

– Connect multimeter between contacts E2 and E3 to measure resistance.

• Specification: 0.45 ... 0.55 Ω

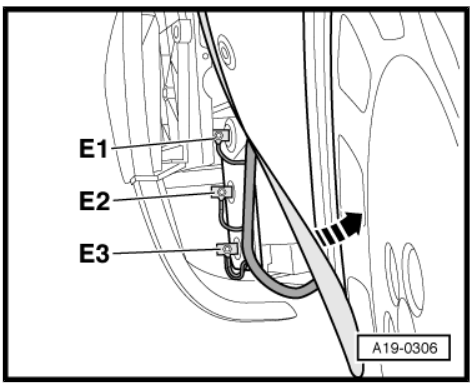

If the specifications are not obtained:

– Renew radiator fan series resistor -N39- .

If the specifications are obtained:

– Use current flow diagram to check wiring.

1.18 Removing and installing electrical radiator fan -V7-

1.18.1 Removing

Note

All cable ties which are released or cut open when removing must be fitted in the same position when installing.

– Pull lock carrier forwards ⇒ page 42 .

– Unplug electrical connector -arrow- to electrical radiator fan -V7- at bracket for ABS unit.

– Move electrical wiring harness clear.

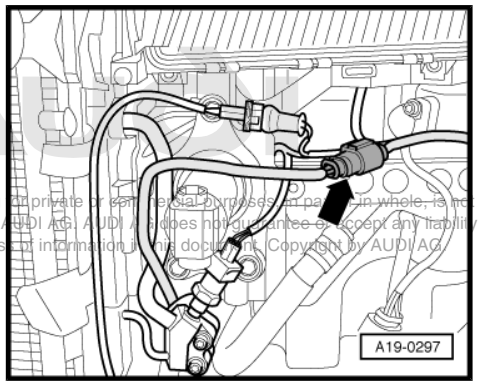

Protected by copyright. Copying for private or commercial purposes, in part or in whole, is not permitted unless authorised by AUDI AG. AUDI AG does not guarantee or accept any liability with respect to the correctness of information in this document. Copyright by AUDI AG.

– Remove electrical radiator fan -V7- by pushing in pin -1- and removing clip.
– Turn electrical radiator fan in the direction of -arrow- and remove.

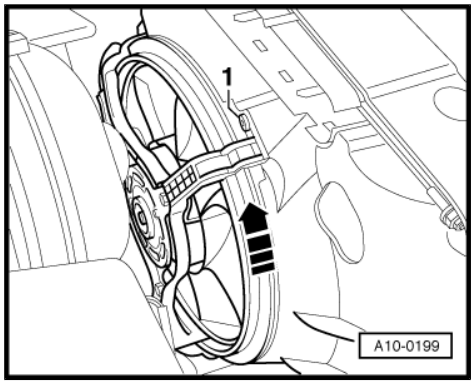

Protected by copyright. Copying for private or commercial purposes, in part or in whole, is not permitted unless authorised by AUDI AG. AUDI AG does not guarantee or accept any liability with respect to the correctness of information in this document. Copyright by AUDI AG.

1.18.2 Installing

Installation is carried out in the reverse order; note the following:

– Install lock carrier ⇒ page 47 .

26 – Exhaust system

1 Removing and installing parts of exhaust system

Note

- *Renew gaskets, seals and self-locking nuts.*
- *After working on the exhaust system, ensure that the system is not under stress and that it has sufficient clearance from the body. If necessary, loosen clamps and align silencers and exhaust pipes so that sufficient clearance is maintained to the body at all points and the mountings are evenly loaded.*
- *To avoid damage, the flexible joints in the intermediate pipes must not be bent more than 10°.*

Protected by copyright. Copying for private or commercial purposes, in part or in whole, is not permitted unless authorised by AUDI AG. AUDI AG does not guarantee or accept any liability with respect to the correctness of information in this document. Copyright by AUDI AG.

2 Removing and installing starter catalytic converters, intermediate pipes and main catalytic converters

Note

The illustration shows the starter catalytic converters, intermediate pipe and main catalytic converter for cylinder bank 2 (left-side).

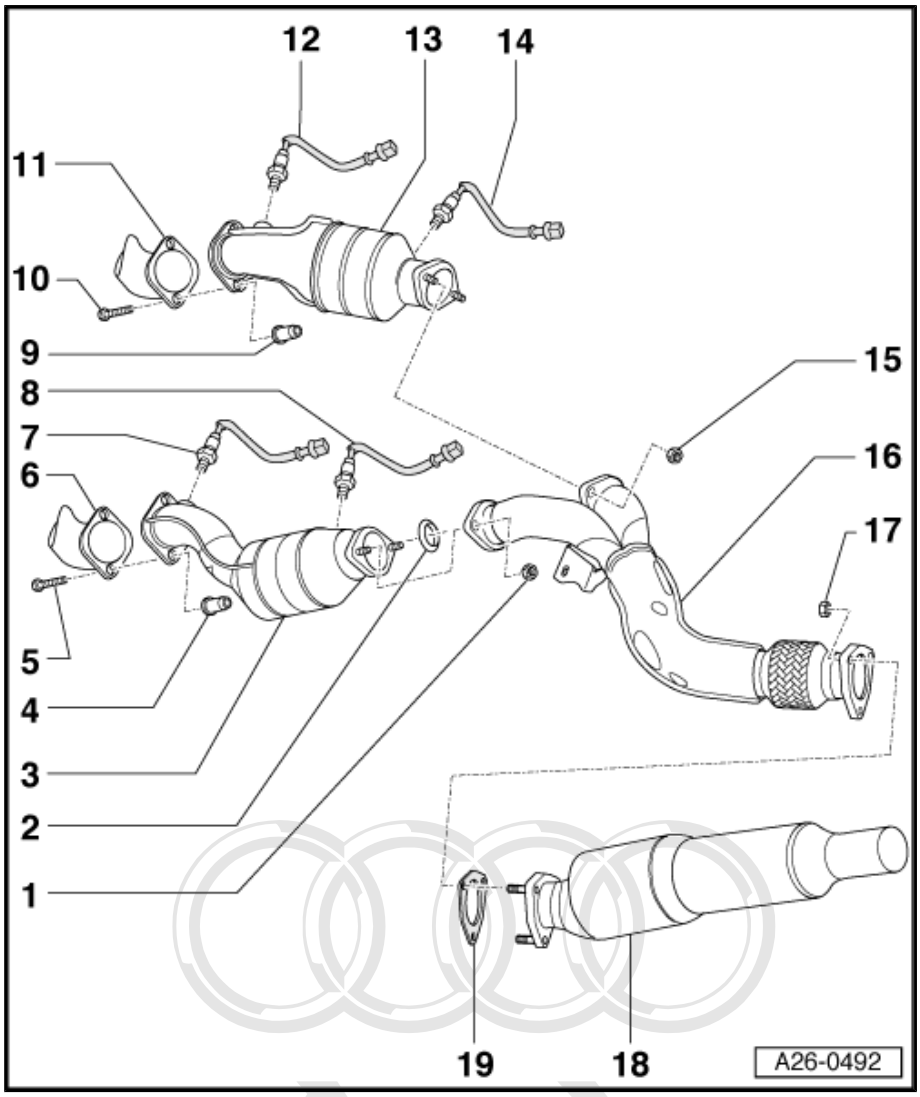

1 - 23 Nm

- ❑ Renew

2 - Seal

- ❑ Sensitive to impact, do not drop

3 - Starter catalytic converter (lower)

- ❑ Removing, installing and adjusting ⇒ page 196
- ❑ Protect from damage by knocks and impacts

4 - 23 Nm

- ❑ Renew

5 - Special bolt

- ❑ Renew
- ❑ Note installation position

6 - Exhaust manifold (front)

- ❑ Removing and installing ⇒ page 201

7 - Lambda probe (before catalytic converter), 55 Nm

- ❑ Threads of new lambda probes are already greased with assembly paste; the paste must not get into the slots on the probe body
- ❑ When re-using the old lambda probe, grease thread with high-temperature lubricant; the paste must not get into the slots of the probe body; High-temperature lubricant ⇒ Parts catalogue
- ❑ Removing and installing ⇒ Motronic injection and ignition system (12-cyl.); Rep. Gr. 24

8 - Lambda probe (after catalytic converter), 55 Nm

- ❑ Threads of new lambda probes are already greased with assembly paste; the paste must not get into the slots on the probe body
- ❑ When re-using the old lambda probe, grease thread with high-temperature lubricant; the paste must not get into the slots of the probe body; High-temperature lubricant ⇒ Parts catalogue
- ❑ Removing and installing ⇒ Motronic injection and ignition system (12-cyl.); Rep. Gr. 24

Subject to all intellectual property rights. Distribution to third parties and any other use is not permitted unless authorised by AUDI AG. AUDI AG does not guarantee or accept any liability with respect to the correctness of information in this document. Copyright by AUDI AG.

9 - 23 Nm

- ❑ Renew

10 - Special bolt

- ❑ Renew
- ❑ Note installation position

11 - Exhaust manifold (rear)

- ❑ Removing and installing ⇒ page 201

12 - Lambda probe (before catalytic converter), 55 Nm

- ❑ Threads of new lambda probes are already greased with assembly paste; the paste must not get into the slots on the probe body
- ❑ When re-using the old lambda probe, grease thread with high-temperature lubricant; the paste must not get into the slots of the probe body; High-temperature lubricant ⇒ Parts catalogue
- ❑ Removing and installing ⇒ Motronic injection and ignition system (12-cyl.); Rep. Gr. 24

13 - Starter catalytic converter (upper)

- ❑ Removing, installing and adjusting ⇒ page 196
- ❑ Protect from damage by knocks and impacts

14 - Lambda probe (after catalytic converter), 55 Nm

- ❑ Threads of new lambda probes are already greased with assembly paste; the paste must not get into the slots on the probe body
- ❑ When re-using the old lambda probe, grease thread with high-temperature lubricant; the paste must not get into the slots of the probe body; High-temperature lubricant ⇒ Parts catalogue
- ❑ Removing and installing ⇒ Motronic injection and ignition system (12-cyl.); Rep. Gr. 24

This document is copyright protected. Distribution to third parties, reproduction and other use are not permitted unless authorised by AUDI AG. AUDI AG does not guarantee or accept any liability with respect to the correctness of information in this document. Copyright by AUDI AG.

15 - 23 Nm

- ❑ Renew

16 - Intermediate pipe

- ❑ With flexible joint
- ❑ Do not bend flexible joint more than 10° - otherwise it can be damaged
- ❑ Removing, installing and adjusting ⇒ page 196
- ❑ Mounting components ⇒ page 196

17 - 23 Nm

- ❑ Renew

18 - Main catalytic converter

- ❑ Removing, installing and adjusting ⇒ page 196
- ❑ Protect from damage by knocks and impacts

19 - Gasket

- ❑ Renew

Mounting components for intermediate pipe

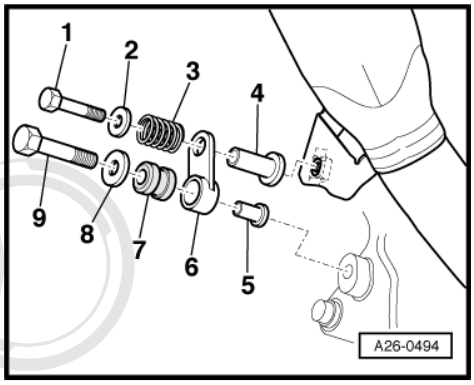

1 - Bolt -25 Nm-
2 - Washer
3 - Compression spring
4 - Spacer sleeve
5 - Spacer sleeve
6 - Bracket
7 - Buffer
8 - Washer
9 - Bolt -25 Nm-

Note

- *The collar of the spacer sleeve -Item 4- must face the intermediate pipe.*
- *The collar of the spacer sleeve -Item 5- must face the gearbox support.*

Reproduction or duplication of this document or any part thereof for commercial purposes, in part or in whole, is not permitted unless authorised by AUDI AG. AUDI AG does not guarantee or accept any liability with respect to the correctness of information in this document. Copyright by AUDI AG.

2.1 Removing and installing starter catalytic converters, intermediate pipes and main catalytic converters

Special tools and workshop equipment required

- Assembly tool -VAS 6187-

2.1.1 Removing

- Engine removed.

– Unbolt starter catalytic converters, intermediate pipes and main catalytic converters from engine ⇒ page 194 .

2.1.2 Installing

Note

Renew seals, gaskets, self-locking nuts and special bolts ⇒ Item 5 (page 194) and ⇒ Item 10 (page 195) .

– Initially tighten starter catalytic converters only hand-tight.

- The components must still be movable.

– Secure assembly device -VAS 6187- to gearbox as illustrated and secure starter catalytic converters to assembly device.

– Tighten starter catalytic converter on exhaust manifold to 23 Nm.

– Remove assembly device -VAS 6187- from gearbox.

– Initially tighten the following components only hand-tight:

♦ Intermediate pipes: the components must still be movable.

♦ Mounting for intermediate pipes

♦ Heat shields for drive shafts

♦ Gearbox mounting to gearbox support

♦ Heat shield for selector lever cable

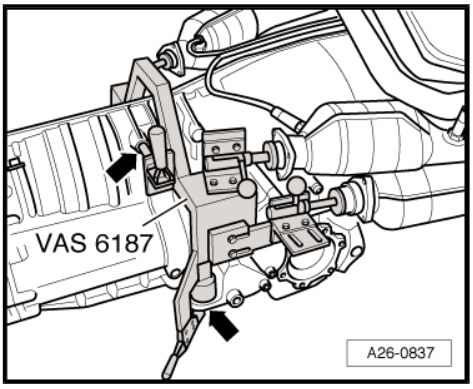

Note

♦ *The mountings for intermediate pipes, gearbox mounting and heat shields are only used as reference points and must be removed again once exhaust system is aligned.*

♦ *To avoid damage, the flexible joints in the intermediate pipes must not be bent more than 10°.*

– Insert a long mandrel or ∅ 6.5 mm drill bit into holes of mounting at intermediate pipes as an alignment aid.

• The mandrel serves as an assembly aid and must be vertical after installation of intermediate pipes.

– Tighten exhaust system in the sequence described in the following and note the installation dimensions ⇒ page 198 and ⇒ page 199 .

– Align intermediate pipe to top flange connection and to mounting.

– Hand-tighten bottom flange connection.

– Secure intermediate pipe to upper starter catalytic converter with 23 Nm.

– Secure lower starter catalytic converter to exhaust manifold with 23 Nm.

– Tighten the bottom flange connection to 23 Nm.

– Repeat procedure on opposite side of vehicle.

– Then check installation dimensions again ⇒ page 198 and ⇒ page 199 .

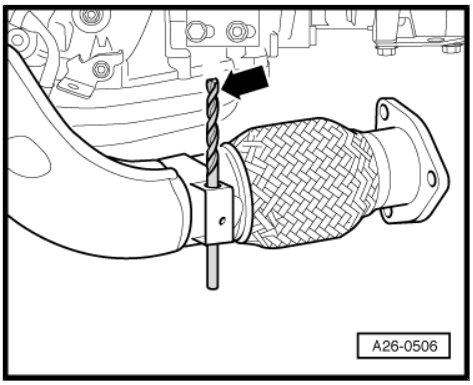

Protected by copyright. Copying for private or commercial purposes, in part or in whole, is not permitted unless authorised by AUDI AG. AUDI AG does not guarantee or accept any liability with respect to the correctness of information in this document. Copyright by AUDI AG.

2.1.3 Installation dimensions for exhaust system - left-side of engine

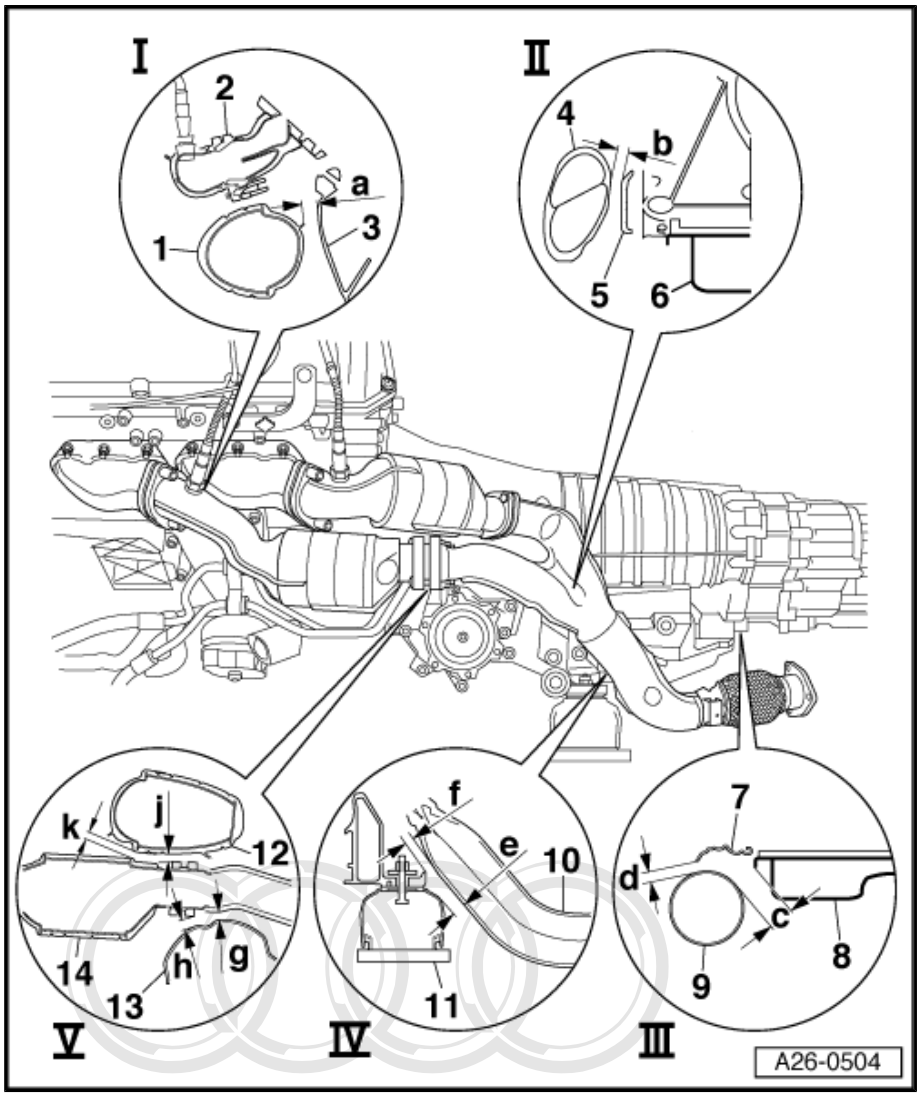

I - Enlargement I

- ❑ Dimension -a- = at least 18 mm

1 - Starter catalytic converter (lower)

2 - Starter catalytic converter (upper)

3 - Engine support

II - Enlargement II

Dimension -b- = at least 11 mm

4 - Intermediate pipe

5 - Gearbox support

6 - Gearbox

III - Enlargement III

Dimension -c- = max. 25 mm

Dimension -d- = 13 mm.

7 - Heat shield for selector lever cable

8 - ATF-gearbox oil pan

9 - Intermediate pipe

IV - Enlargement IV

- ❑ Dimension -e- = at least 17 mm
- ❑ Dimension -f- = at least 10 mm

10 - Intermediate pipe

11 - Gearbox mounting

V - Enlargement V

- ❑ Dimension -g- = at least 11 mm
- ❑ Dimension -h- = at least 13 mm
- ❑ Dimension -j- = at least 9 mm
- ❑ Dimension -k- = at least 10 mm

12 - Starter catalytic converter (upper)

13 - Heat shield for drive shaft

14 - Starter catalytic converter (lower)

Protected by copyright. Copying for private or commercial purposes, in part or in whole, is not permitted unless authorised by AUDI AG. AUDI AG does not guarantee or accept any liability with respect to the correctness of information in this document. Copyright by AUDI AG.

2.1.4 Installation dimensions for exhaust system - right-side of engine

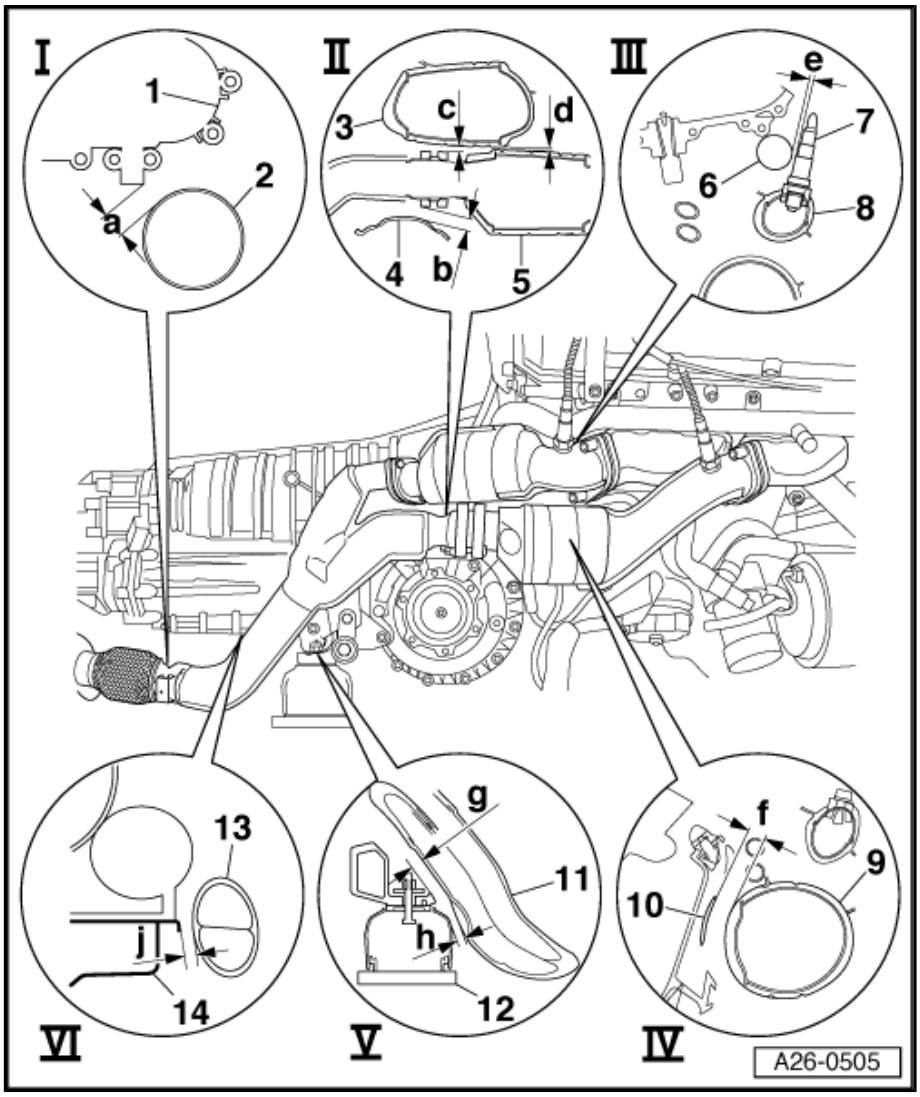

I - Enlargement I
- ❑ Dimension -a- = 19 mm.

1 - Gearbox

2 - Intermediate pipe

II - Enlargement II
- ❑ Dimension -b- = at least 15 mm
- ❑ Dimension -c- = at least 7 mm
- ❑ Dimension -d- = at least 4 mm

3 - Starter catalytic converter (upper)

4 - Heat shield
- ❑ For drive shaft

5 - Starter catalytic converter (lower)

III - Enlargement III
- ❑ Dimension -e- = at least 8 mm

6 - Coolant pipe

7 - Lambda probe

8 - Starter catalytic converter (upper)

IV - Enlargement IV
- ❑ Dimension -f- = at least 16 mm

9 - Starter catalytic converter (lower)

10 - Engine support

V - Enlargement V
- ❑ Dimension -g- = at least 17 mm
- ❑ Dimension -h- = at least 16 mm

11 - Intermediate pipe

12 - Gearbox mounting

VI - Enlargement VI
- ❑ Dimension -j- = at least 13 mm

13 - Intermediate pipe

14 - Gearbox

Protected by copyright. Copying for private or commercial purposes, in part or in whole, is not permitted unless authorised by AUDI AG. AUDI AG does not guarantee or accept any liability with respect to the correctness of information in this document. Copyright by AUDI AG.

– After installation of engine, check that installation dimensions of exhaust system in relation to body are as shown in the following illustration.

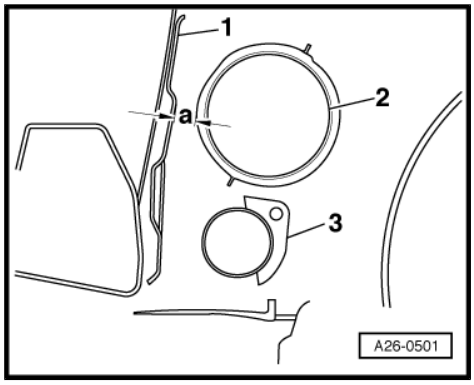

Starter catalytic converter (upper left) - distance to longitudinal member (reference dimension)

1 - Heat shield on longitudinal member

2 - Starter catalytic converter (upper)

3 - Starter catalytic converter (lower)

• Dimension -a- = at least 16 mm

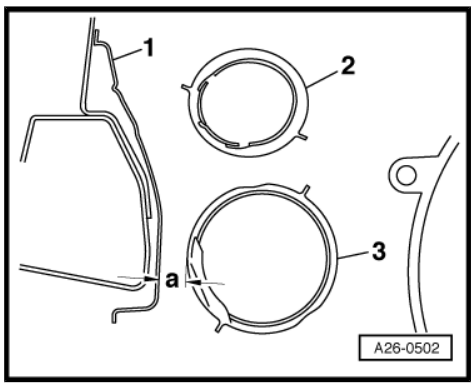

Starter catalytic converter (lower left) - distance to longitudinal member (reference dimension)

1 - Heat shield on longitudinal member

2 - Starter catalytic converter (upper)

3 - Starter catalytic converter (lower)

• Dimension -a- = at least 21 mm

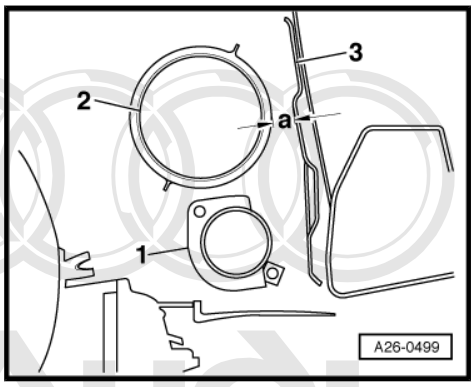

Starter catalytic converter (upper right) - distance to longitudinal member (reference dimension)

1 - Starter catalytic converter (lower)

2 - Starter catalytic converter (upper)

3 - Heat shield on longitudinal member

• Dimension -a- = at least 15 mm

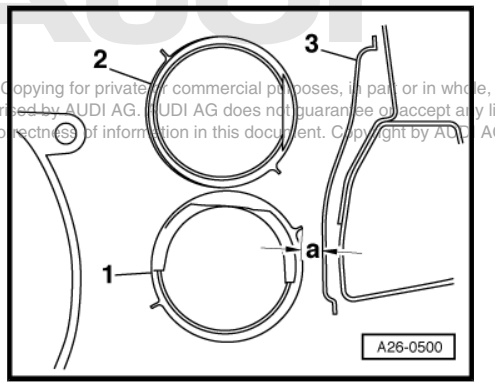

Starter catalytic converter (lower right) - distance to longitudinal member (reference dimension)

1 - Starter catalytic converter (lower)

2 - Starter catalytic converter (upper)

3 - Heat shield on longitudinal member

• Dimension -a- = at least 12 mm

Protected by copyright. Copying for private or commercial purposes, in part or in whole, is not permitted unless authorised by AUDI AG. AUDI AG does not guarantee or accept any liability with respect to the correctness of information in this document. Copyright by AUDI AG.

Intermediate pipe (left-side) - distance to body and to subframe

1 - Subframe

2 - Heat shield on body

3 - Gearbox

4 - Intermediate pipe

- Dimension -a- = at least 11 mm
- Dimension -b- = at least 16 mm

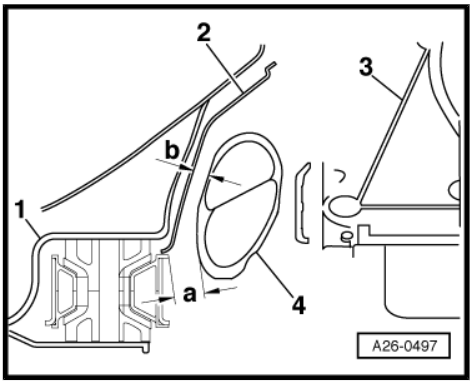

Intermediate pipe (right-side) - distance to body and to subframe

1 - Gearbox

2 - Heat shield on body

3 - Subframe

4 - Intermediate pipe

- Dimension -a- = at least 15 mm
- Dimension -b- = at least 20 mm

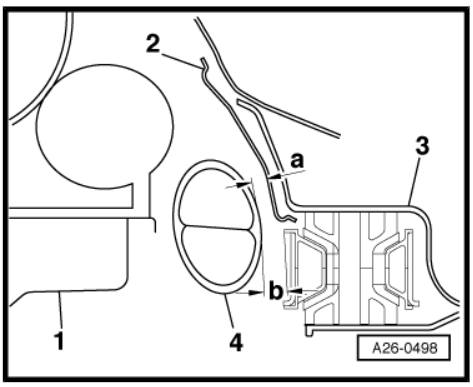

2.2 Removing and installing exhaust manifold

2.2.1 Removing

- Engine removed.

– Unbolt starter catalytic converters, intermediate pipes and main catalytic converters from engine ⇒ page 194 .

– Unscrew nuts -1 … 4- and remove exhaust manifold.

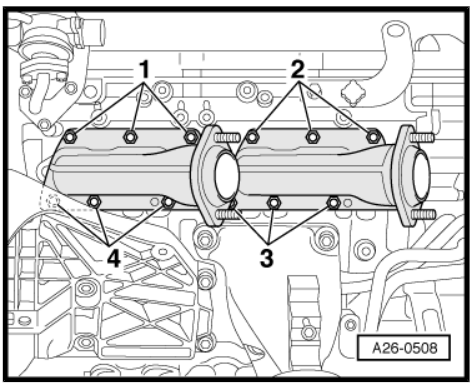

Protected by copyright. Copying for private or commercial purposes, in part or in whole, is not permitted unless authorised by AUDI AG. AUDI AG does not guarantee or accept any liability with respect to the correctness of information in this document. Copyright by AUDI AG.

2.2.2 Installing

Installation is carried out in the reverse order; note the following:

Note

Renew gaskets and self-locking nuts.

– Install starter catalytic converters , intermediate pipes and main catalytic converters ⇒ page 194 .

2.2.3 Tightening torque

Component	Nm
Exhaust manifold to cylinder head	22

Protected by copyright. Copying for private or commercial purposes, in part or in whole, is not permitted unless authorised by AUDI AG. AUDI AG does not guarantee or accept any liability with respect to the correctness of information in this document. Copyright by AUDI AG.

3 Removing and installing centre silencer and rear silencer

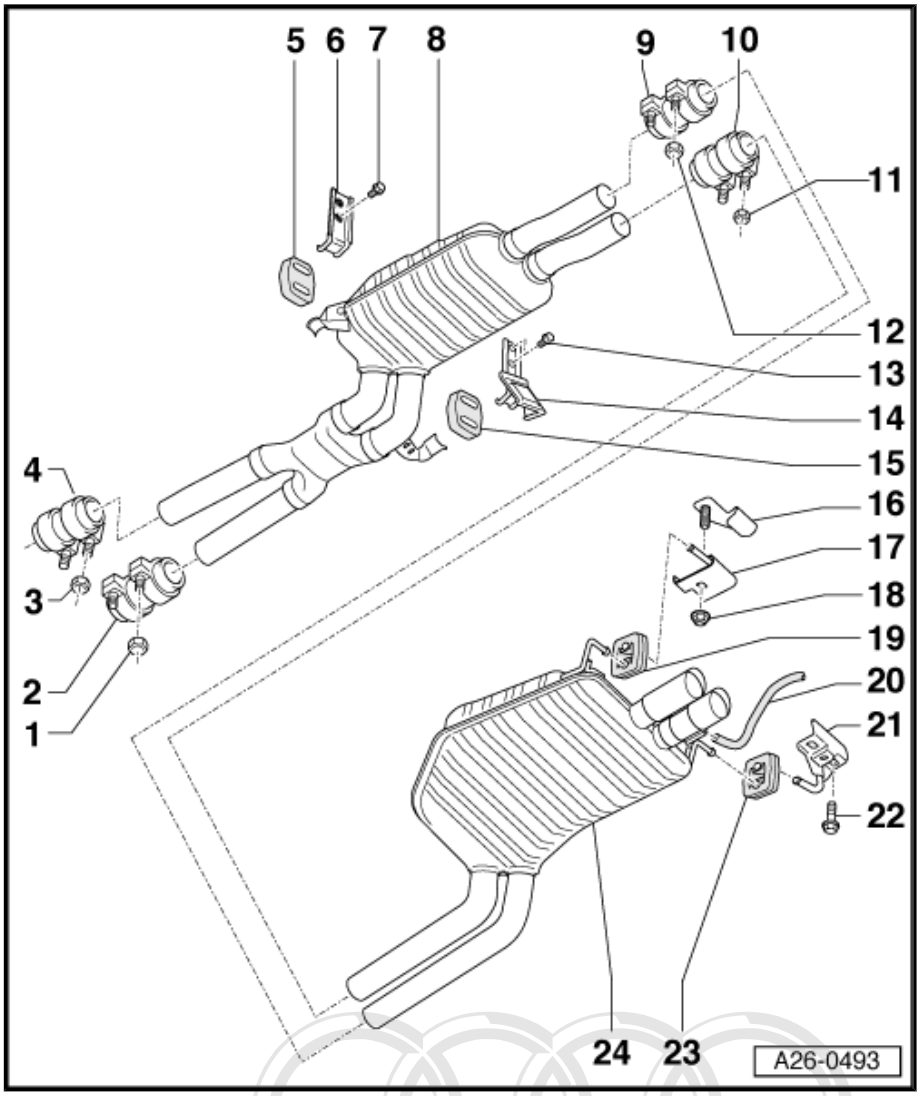

1 - 40 Nm

2 - Clamp (front right)

- ❑ Align exhaust system so it is free of stress before tightening clamp ⇒ page 205
- ❑ Installation position of bolts ⇒ page 204
- ❑ Tighten bolt connections evenly; at the same time push exhaust pipes of centre silencer upwards slightly

3 - 40 Nm

4 - Clamp (front left)

- ❑ Align exhaust system so it is free of stress before tightening clamp ⇒ page 205
- ❑ Installation position of bolts ⇒ page 204
- ❑ Tighten bolt connections evenly; at the same time push exhaust pipes of centre silencer upwards slightly

5 - Rubber mounting

- ❑ Black with coloured marking
- ❑ Check preloading, refer to "Stress-free alignment of exhaust system" ⇒ page 205

6 - Bracket

7 - 25 Nm

8 - Centre silencer

- ❑ Align exhaust system so it is free of stress ⇒ page 205

9 - Clamp (rear left)

- ❑ Align exhaust system so it is free of stress before tightening clamp ⇒ page 205
- ❑ Installation position ⇒ page 205
- ❑ Tighten bolt connections evenly; at the same time turn rear silencer clockwise slightly until the tailpipes are horizontal

10 - Clamp (rear right)

- ❑ Align exhaust system so it is free of stress before tightening clamp ⇒ page 205
- ❑ Installation position ⇒ page 205
- ❑ Tighten bolt connections evenly; at the same time turn rear silencer clockwise slightly until the tailpipes are horizontal

Protected by copyright. Copying for private or commercial purposes, in part or in whole, is not permitted unless authorised by AUDI AG. AUDI AG does not guarantee or accept any liability with respect to the correctness of information in this document. Copyright by AUDI AG.

11 - 40 Nm

12 - 40 Nm

13 - 25 Nm

14 - Bracket

15 - Rubber mounting
- ❑ Black with coloured marking
- ❑ Check preloading, refer to "Stress-free alignment of exhaust system" ⇒ page 205

16 - Fastener
- ❑ With retainer

17 - Bracket

18 - Nut and washer assembly, 28 Nm
- ❑ Only fit with ∅ 32 mm washer

Protected by copyright. Copying for private or commercial purposes, in part or in whole, is not permitted unless authorised by AUDI AG. AUDI AG does not guarantee or accept any liability with respect to the correctness of information in this document. Copyright by AUDI AG.

19 - Rubber mounting
- ❑ Red
- ❑ Check preloading, refer to "Stress-free alignment of exhaust system" ⇒ page 205

20 - Vacuum hose
- ❑ For exhaust flap
- ❑ From exhaust flap valve -N321-

21 - Bracket

22 - 25 Nm

23 - Rubber mounting
- ❑ Red
- ❑ Check preloading, refer to "Stress-free alignment of exhaust system" ⇒ page 205

24 - Rear silencer
- ❑ With exhaust flap
- ❑ Checking exhaust flap ⇒ page 207
- ❑ Align exhaust system so it is free of stress ⇒ page 205

Installation position of front clamps

– Install clamps so that the bolt ends do not protrude beyond bottom of clamp.

• Bolt connections face one another.

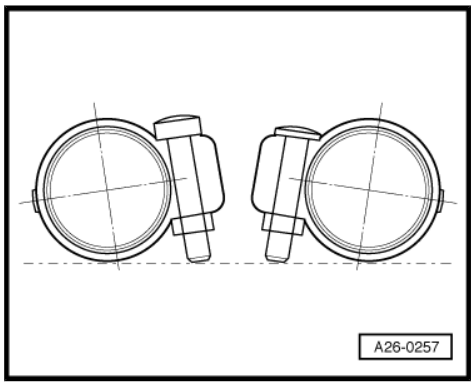

Installation position of rear clamps

– Install clamps so that the bolt ends do not protrude beyond bottom of clamp.

• Bolt connections face outwards.

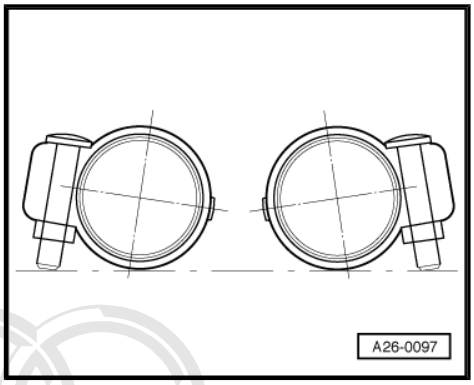

Distance of exhaust pipes from cross member for underbody

1 - Cross member for underbody

• Dimension -a- = dimension -d-

• Dimension -b- = approx. 24 mm

• Dimension -c- = approx. 24 mm

• Dimension -d- = dimension -a-

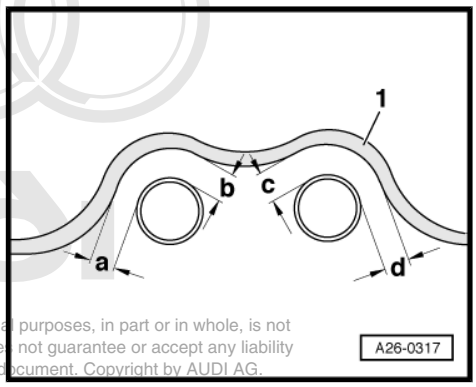

Protected by copyright. Copying for private or commercial purposes, in part or in whole, is not permitted unless authorised by AUDI AG. AUDI AG does not guarantee or accept any liability with respect to the correctness of information in this document. Copyright by AUDI AG.

Distance of main catalytic converters to propshaft heat shield and to underbody

1 - Heat shield for propshaft

• Dimension -a- = approx. 20 mm

• Dimension -b- = approx. 22 mm

• Dimension -c- = approx. 17 mm

• Dimension -d- = approx. 28 mm

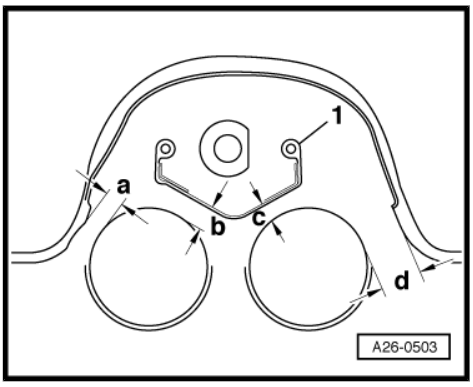

3.1 Stress-free alignment of exhaust system

Note

♦ *Note the installation positions and installation dimensions for the exhaust system ⇒ page 204 to ⇒ page 205 .*

♦ *The exhaust system must be aligned when it is cool.*

– Loosen bolts on front clamps ⇒ Item 4 (page 203) and ⇒ Item 2 (page 203) .

– Push exhaust system towards front of vehicle -arrow- so that rubber mounting (front left) on centre silencer is preloaded by -a- = 10 mm.

– Tighten bolt connections of clamps evenly to 40 Nm while pushing exhaust pipes of centre silencer slightly upwards.

– Note installation position of clamps ⇒ page 204 .

– Loosen bolts on rear clamps ⇒ Item 9 (page 203) and ⇒ Item 10 (page 203) .

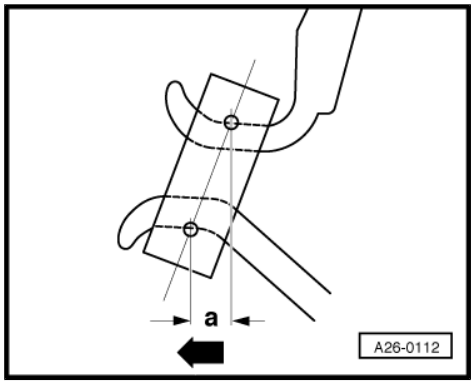

– Push rear silencer towards front of vehicle -arrow- so that rubber mounting (rear left) on rear silencer is preloaded by -a- = 15 ... 17 mm.

Protected by copyright. Copying for private or commercial purposes, in part or in whole, is not permitted unless authorised by AUDI AG. AUDI AG does not guarantee or accept any liability with respect to the correctness of information in this document. Copyright by AUDI AG.

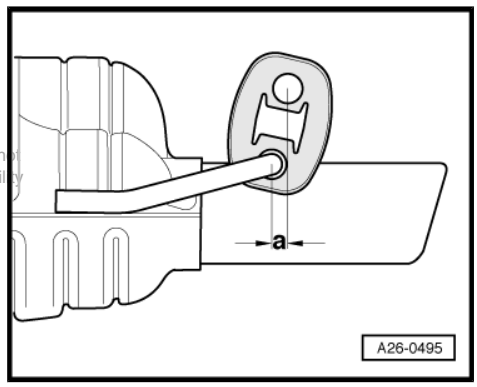

– Tighten bolt connections of clamps evenly to 40 Nm while turning rear silencer slightly to align the tailpipes horizontally.

• The left-side dimension -a- must be the same as right-side dimension -a-.

• Dimension -b- = at least 22.5 mm

– Note installation position of clamps ⇒ page 205 .

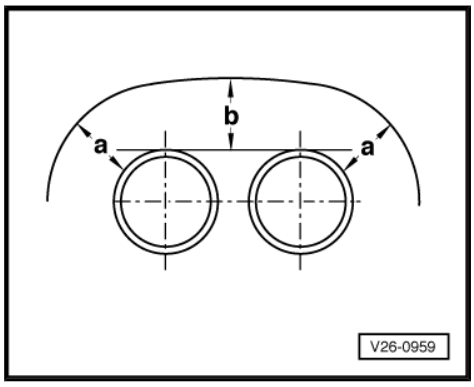

– Check position of tailpipes in relation to bumper.

• Dimension -a- = 6 … 10 mm.

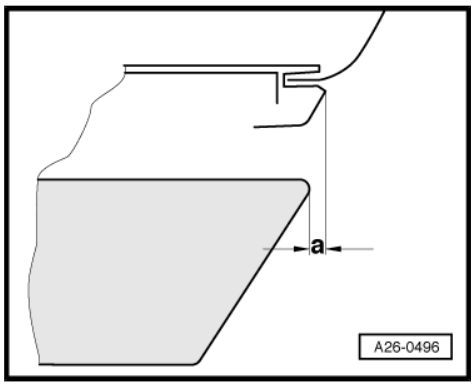

4 Servicing exhaust flap

4.1 Checking exhaust flap

Special tools and workshop equipment required

♦ Vehicle diagnostic, testing and information system -VAS 5051- with diagnosis lead -VAS 5051/1-

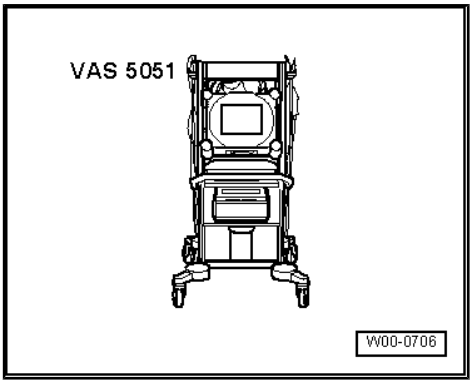

4.1.1 Test sequence

- Vehicle diagnostic, testing and information system -VAS 5051- with diagnosis lead -VAS 5051/1- is connected; vehicle self-diagnosis and vehicle system “01 - Engine electronics” is selected.

– Run engine briefly to ensure the vacuum necessary for testing is present in vacuum reservoir.

– Switch engine off and ignition on.

– Under selection menu -1- select the diagnostic function “03 - Final control diagnosis”.

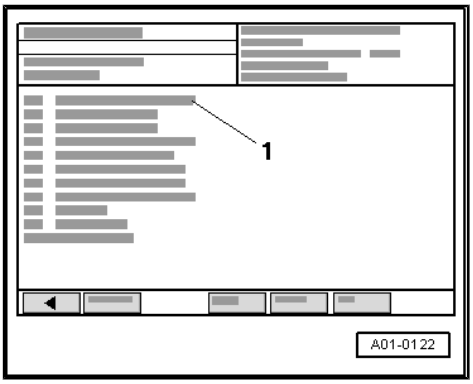

– Press the button ⇨ until the exhaust flap valve -N321- is actuated.

- The exhaust flap operating rod must move up and down.

– Exit function “03 - Final control diagnosis” by pressing the ⇦ key.

– Press the diagnostic function “06 - end output” and switch off the ignition.

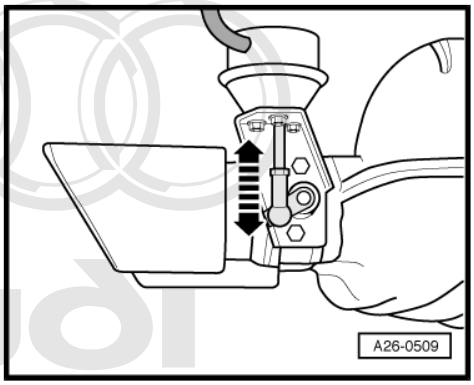

If the operating rod does not move:

– Test vacuum unit of exhaust flap for leaks ⇒ page 208 .

– Check vacuum pipe from vacuum reservoir in front right wheel housing to exhaust flap valve -N321- below left side trim of luggage compartment.

– Check exhaust flap valve -N321- ⇒ page 209 .

Protected by copyright. Copying for private or commercial purposes, in part or in whole, is not permitted unless authorised by AUDI AG. AUDI AG does not guarantee or accept any liability with respect to the correctness of information in this document. Copyright by AUDI AG.

4.2 Checking vacuum unit for exhaust flap

Special tools and workshop equipment required

♦ Hand-operated vacuum pump -V.A.G 1390-

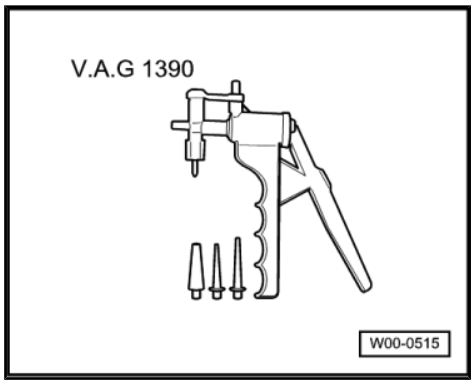

4.2.1 Test sequence

Protected by copyright. Copying for private or commercial purposes, in part or in whole, is not permitted unless authorised by AUDI AG. AUDI AG does not guarantee or assume any liability with respect to the correctness of information in this document. Copyright by AUDI AG.

– Disconnect hose at vacuum unit for exhaust flap on rear silencer.

– Connect hand-operated vacuum pump -V.A.G 1390- to vacuum unit.

– Create vacuum with hand-operated vacuum pump.

• The linkage should move upwards.

– Vent hand vacuum pump.

• Linkage should move downwards

If the linkage does not move:

– Check the linkage for ease of movement and check the vacuum unit for leaks.

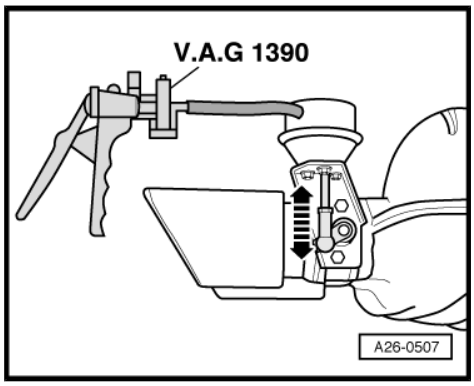

4.3 Checking exhaust flap valve -N321-

Special tools and workshop equipment required

- Hand-held multimeter -V.A.G 1526 A-
- Voltage tester -V.A.G 1527 B-
- Adapter set -V.A.G 1594 A-
- Test box -V.A.G 1598/31-
- Vehicle diagnostic, testing and information system -VAS 5051- with diagnosis lead -VAS 5051/1-

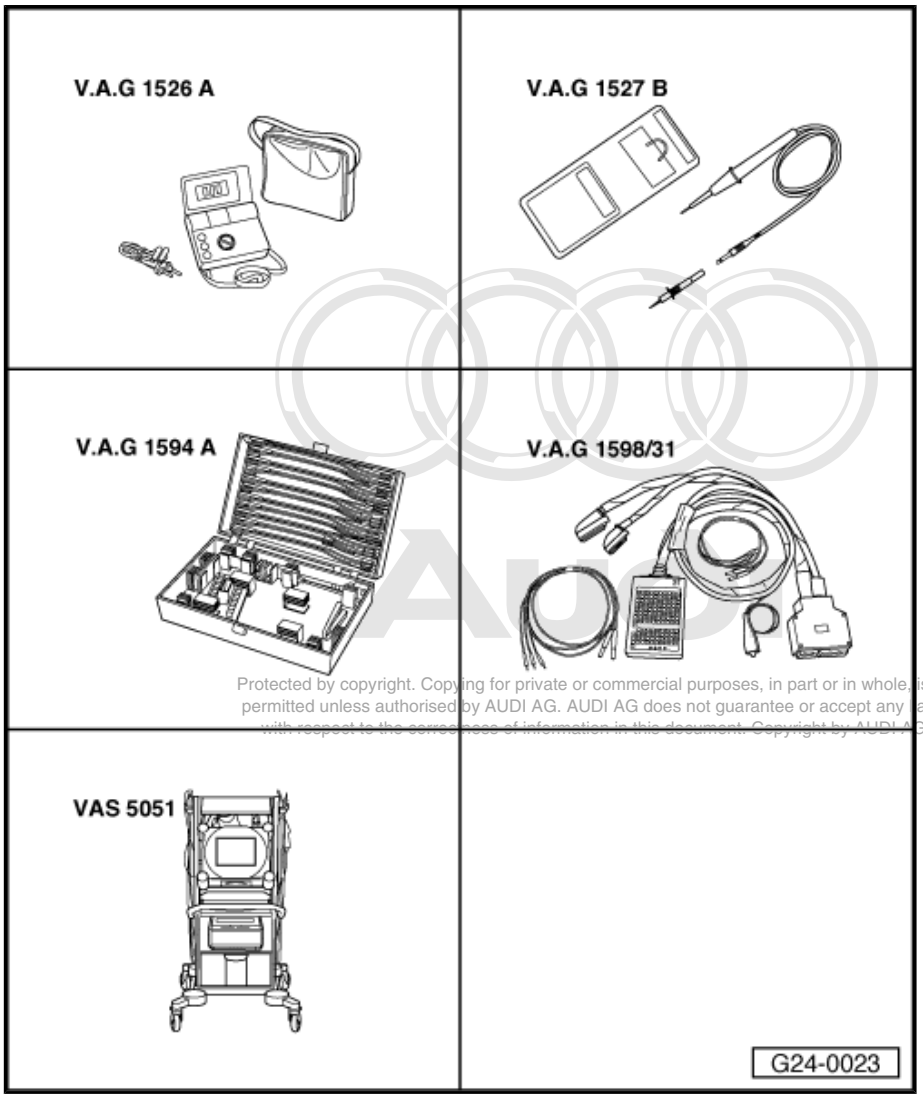

Protected by copyright. Copying for private or commercial purposes, in part or in whole, is not permitted unless authorised by AUDI AG. AUDI AG does not guarantee or accept any liability with respect to the correctness of information in this document. Copyright by AUDI AG.

4.3.1 Test sequence

- Open left-side storage area lid in luggage compartment and remove.
- Unscrew bolts -arrows- and swing installation frame to side with wires and devices still attached.

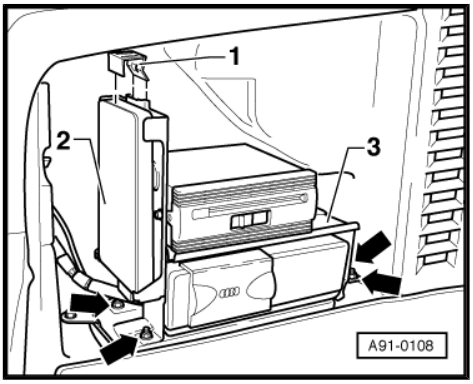

– Unplug connector -arrow- at exhaust flap valve -N321- .

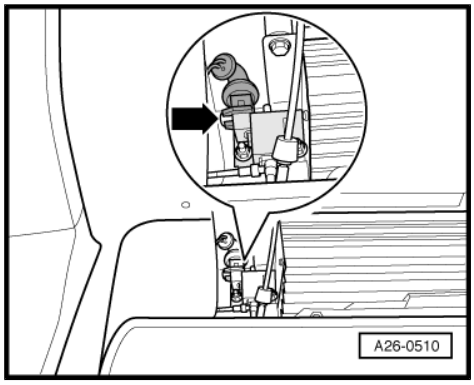

4.3.2 Checking internal resistance

– Connect multimeter to exhaust flap valve -N321- to measure resistance.

• Specification: 22 ... 30 Ω

If specification is not reached:

– Renew exhaust flap valve -N321- .

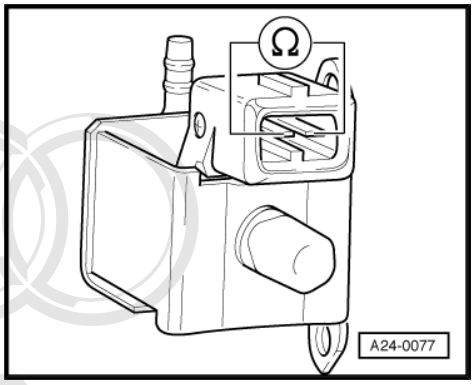

4.3.3 Checking voltage supply

– Connect multimeter to measure voltage to contact -2- and earth.

– Start the engine.

• Specification: approx. battery voltage

If specification is not reached:

– Check for open circuit in wiring and repair if necessary.

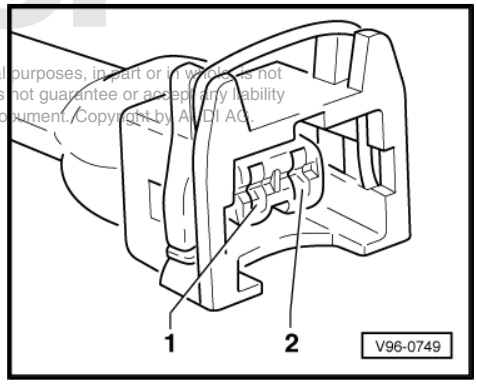

Protected by copyright. Copying for private or commercial purposes, in part or in whole, is not permitted unless authorised by AUDI AG. AUDI AG does not guarantee or accept any liability with respect to the correctness of information in this document. Copyright by AUDI AG.

4.3.4 Checking activation

• Vehicle diagnostic, testing and information system -VAS 5051- with diagnosis lead -VAS 5051/1- is connected; vehicle self-diagnosis and vehicle system “01 - Engine electronics” is selected. When doing this the ignition must be switched on.

– Connect voltage tester -V.A.G 1527 B- between contacts -1- and -2-.

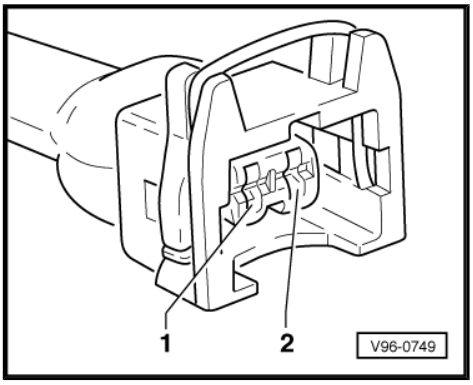

– Under selection menu -1- select the diagnostic function “03 - Final control diagnosis”.

– Press the button ⇨ until the exhaust flap valve -N321- is actuated.

• LED should flash slowly.

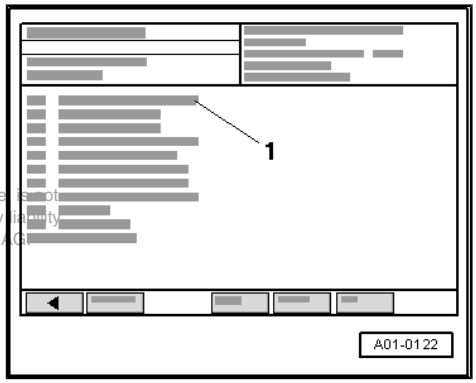

Protected by copyright. Copying for private or commercial purposes, in part or in whole is not permitted unless authorised by AUDI AG. AUDI AG does not guarantee or accept any liability with respect to the correctness of information in this document. Copyright by AUDI AG

Note

Voltage testers with a low current draw do not go out completely between activation signals from engine control unit, but continue to glow slightly and become distinctly brighter on activation.

– Exit function “03 - Final control diagnosis” by pressing the ⇦ key.

– Press the diagnostic function “06 - end output” and switch off the ignition.

If the LED does not flash:

– Connect test box -V.A.G 1598/31- to connectors of wiring harness with black covering for engine control unit -J623- (in electronics box, left-side); the engine control unit should not be connected. Connect earth clip of test box to earth ⇒ Motronic injection and ignition system (12-cyl.); Rep. Gr. 24 .

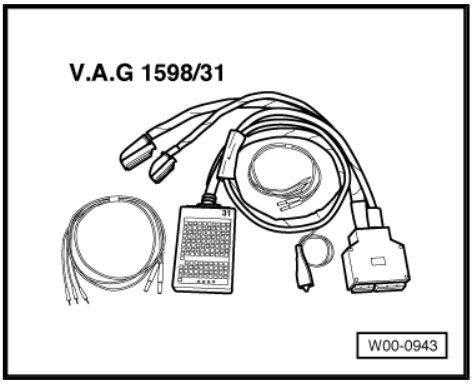

Caution

To prevent damage to electronic components, select appropriate measuring range before connecting measuring leads and observe test requirements.

– Check for open circuit in the following wiring connections:

Connector Contact	Test box -V.A.G 1598/31- Socket
-1-	45
-2-	1 or 2

– If necessary repair wiring connection.

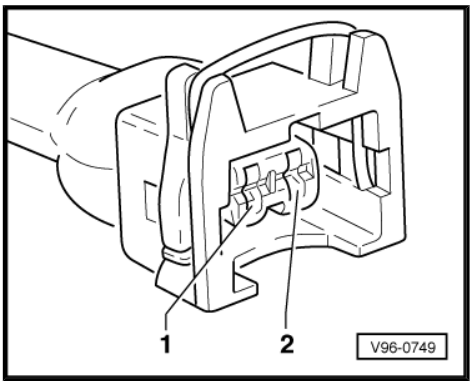

5 Servicing secondary air system

The secondary air system is designed to enable the catalytic converter to heat up and reach its operating temperature more quickly after a cold start.

5.1 Secondary air system

5.1.1 Principle

Because of the over-enrichment of the mixture in the cold start phase, the percentage of unburned hydrocarbons in the exhaust gas is higher. The injection of secondary air improves the post-oxidation in the catalytic converter and thus reduces pollutant emissions. The heat produced by the post-oxidation considerably shortens the start-up time of the catalytic converter and significantly enhances the emission quality in the cold-running phase.

5.1.2 Function

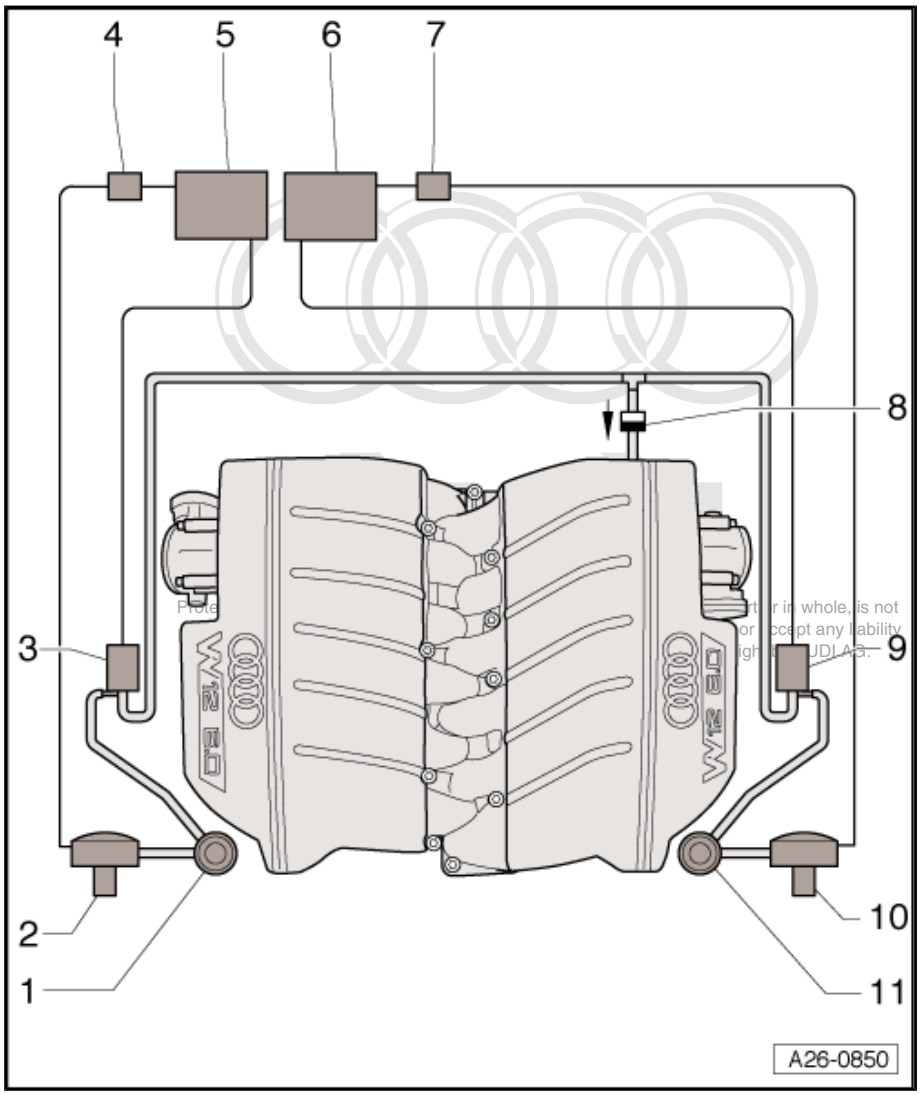

In the cold-running phase the engine control units -5- and -6- activate the secondary air pumps -2- and -10- via both secondary

air pump relays -4- and -7-. Air will then reach the combination valves for secondary air system -1- and -11-.

At the same time, the secondary air inlet valves -3- and -9- will be actuated, allowing vacuum to reach the combination valves for secondary air system -1- and -11-. In this way, the combination valve opens a passage for the secondary air system to supply air to the exhaust ports in the cylinder heads.

5.2 Exploded view of components

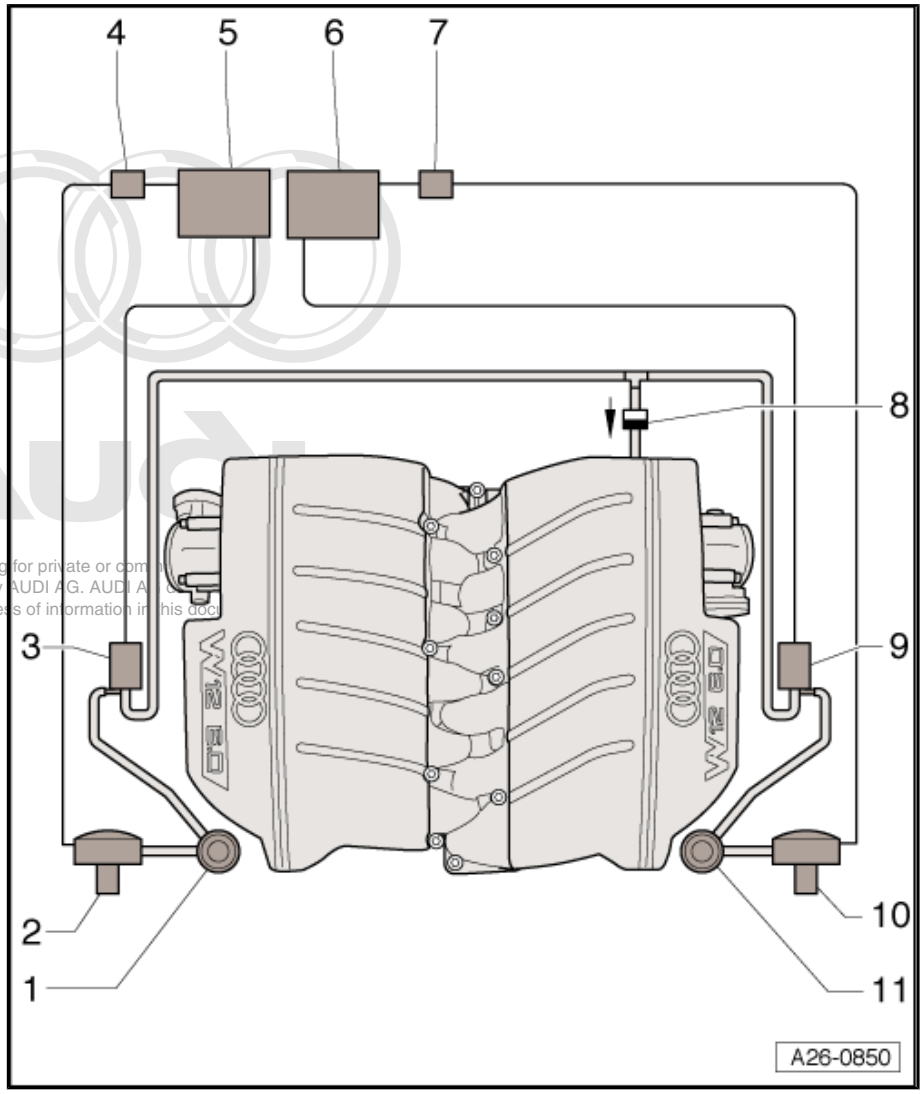

1 - Combination valve for secondary air (right-side)

- ❑ Fitting location ⇒ page 214
- ❑ Checking ⇒ page 215
- ❑ Removing and installing ⇒ page 233

2 - Secondary air pump motor -V101-

- ❑ For cylinder bank 1 (right-side)
- ❑ Fitting location ⇒ page 215
- ❑ Checking ⇒ page 225
- ❑ Removing and installing: refer to Removing and installing secondary air pump ⇒ page 230

3 - Secondary air inlet valve -N112-

- ❑ For cylinder bank 1 (right-side)
- ❑ Fitting location ⇒ page 214
- ❑ Checking ⇒ page 217

4 - Secondary air pump relay -J299-

- ❑ Fitting location ⇒ page 214
- ❑ Checking ⇒ page 221

5 - Engine control unit -J623-

- ❑ In electronics box on left

6 - Engine control unit 2 -J624-

- ❑ In electronics box on right

7 - Relay for secondary air pump 2 -J545-

- ❑ Fitting location ⇒ page 214
- ❑ Checking ⇒ page 221

8 - Non-return valve

- ❑ Installation position: as shown in illustration, the arrow points in direction of flow

9 - Secondary air inlet valve 2 -N320-

- ❑ For cylinder bank 2 (left-side)
- ❑ Fitting location ⇒ page 214
- ❑ Checking ⇒ page 217

Copyright by AUDI AG. Reproducing or copying for private or commercial purposes is not permitted unless authorised by AUDI AG. AUDI AG does not guarantee the correctness of information in this document.

10 - Secondary air pump motor 2 -V189-

- ❑ For cylinder bank 2 (left-side)
- ❑ Fitting location ⇒ page 215
- ❑ Checking ⇒ page 225
- ❑ Removing and installing: refer to Removing and installing secondary air pump ⇒ page 230

11 - Combination valve for secondary air (left-side)

- ❑ Fitting location ⇒ page 214
- ❑ Checking ⇒ page 215
- ❑ Removing and installing ⇒ page 232

Fitting location of secondary air inlet valve -N112- and secondary air inlet valve 2 -N320-

- ♦ On cylinder head cover: right-side (secondary air inlet valve -N112-) and left-side (secondary air inlet valve 2 -N320-)

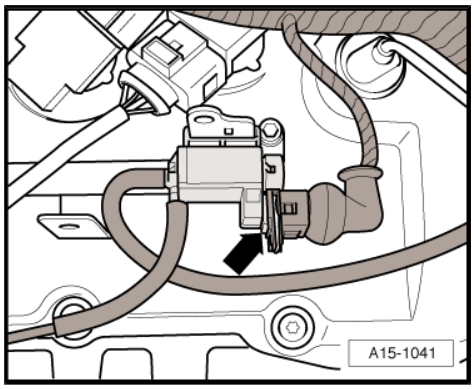

Fitting location of secondary air pump relay -J299- and secondary air pump relay 2 -J545-

- ♦ Secondary air pump relay -J299- is located on relay and fuse carrier in electronics box (plenum chamber), position 2a/2b
- ♦ Secondary air pump relay 2 -J545- is located on relay and fuse carrier in electronics box (plenum chamber), position 9

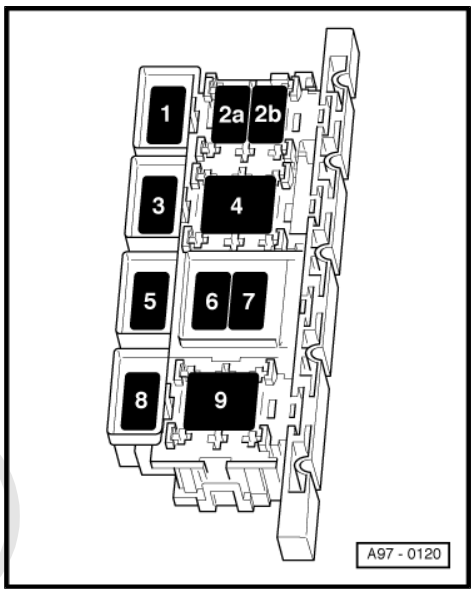

Fitting location of combination valves for secondary air

- ♦ At front of cylinder heads

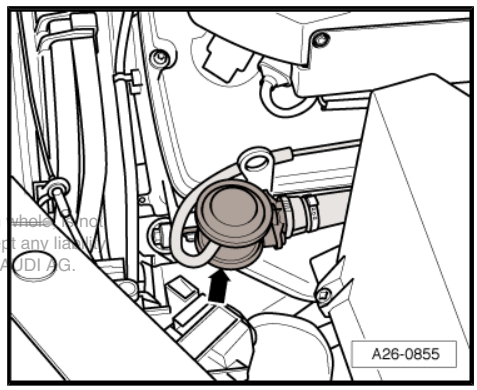

Note

The illustration shows the left-side combination valve for secondary air.

Protected by copyright. Copying for private or commercial purposes, in part or in whole, is not permitted unless authorised by AUDI AG. AUDI AG does not guarantee or accept any liability with respect to the correctness of information in this document. Copyright by AUDI AG.

Fitting location of secondary air pump motor -V101- and secondary air pump motor 2 -V189-

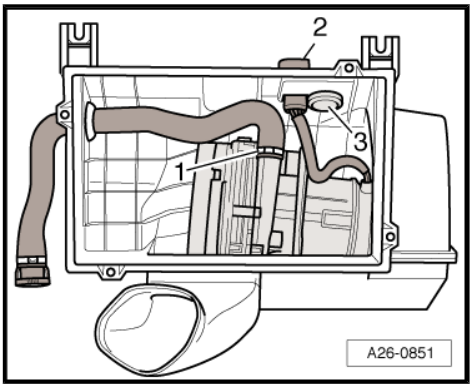

♦ In bottom section of air cleaner housing (left and right)

1 - Hose

2 - Electrical connector

3 - Grommet

Note

The illustration shows left-side air cleaner housing.

5.3 Checking secondary air system for leaks

– Check the connecting pipes and hoses between secondary air pumps and combination valves for leaks; see Exploded view of components ⇒ page 213 .

– Check hoses and hose connections for secure fit.

– Check combination valves for secondary air for leaks ⇒ page 215 .

5.4 Checking combination valves for secondary air for correct operation and leakage

Special tools and workshop equipment required

♦ Hand operated vacuum pump -V.A.G 1390-

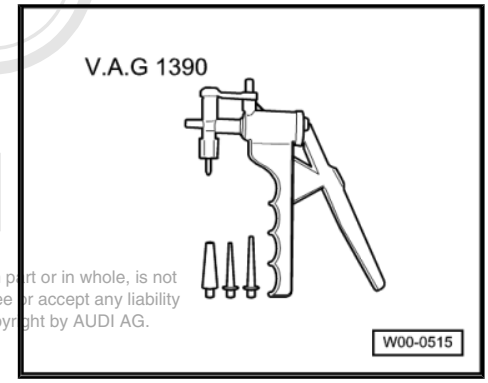

Protected by copyright. Copying for private or commercial purposes, in part or in whole, is not permitted unless authorised by AUDI AG. AUDI AG does not guarantee or accept any liability with respect to the correctness of information in this document. Copyright by AUDI AG.

5.4.1 Test requirements

- Vacuum hoses and hose connections do not leak.
- Vacuum hoses are not clogged.

5.4.2 Test sequence

Note

The described procedure shows cylinder bank 2 (left-side). The procedure for cylinder bank 1 (right-side) is the same.

– Unclip cover -1- for air duct (left-side) on lock carrier in engine compartment.

– Remove air duct -2-.

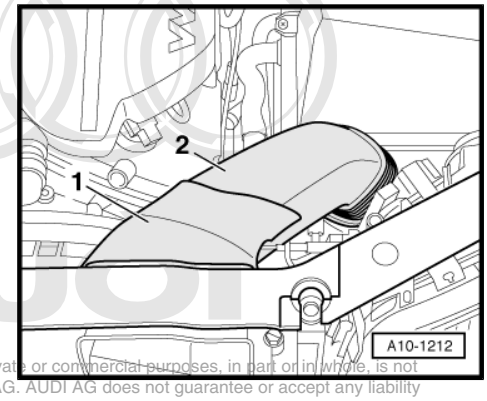

Protected by copyright. Copying for private or commercial purposes, in part or in whole, is not permitted unless authorised by AUDI AG. AUDI AG does not guarantee or accept any liability with respect to the correctness of information in this document. Copyright by AUDI AG.

– Disconnect vacuum hose to combination valve for secondary air.

– Connect the hand vacuum pump -V.A.G 1390- to combination valve that is to be checked.

– Disconnect pressure hose at combination valve for secondary air and connect an auxiliary hose in its place.

• The hose must fit securely on hose flange for secondary air.

– Blow gently into auxiliary hose -arrow- (do not use compressed air).

• The relevant combination valve must be closed; blowing through must not be possible.

– Create vacuum using hand-operated vacuum pump.

• The relevant combination valve should open; it should now be possible to blow through the hose.

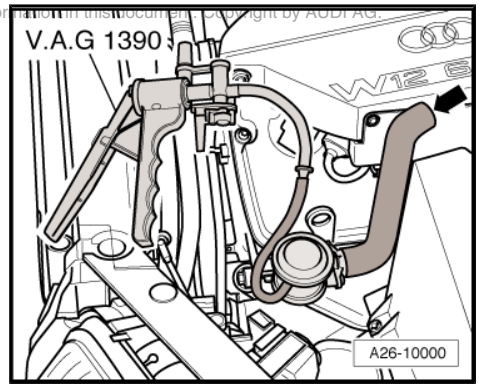

If the combination valve does not open:

– Renew combination valve ⇒ page 232 and ⇒ page 233 .

5.5 Checking secondary air inlet valve -N112- and secondary air inlet valve 2 -N320-

Special tools and workshop equipment required

- Hand-held multimeter -V.A.G 1526 A-
- Voltage tester -V.A.G 1527 B-
- Adapter set -V.A.G 1594 A-
- Test box -V.A.G 1598/31-

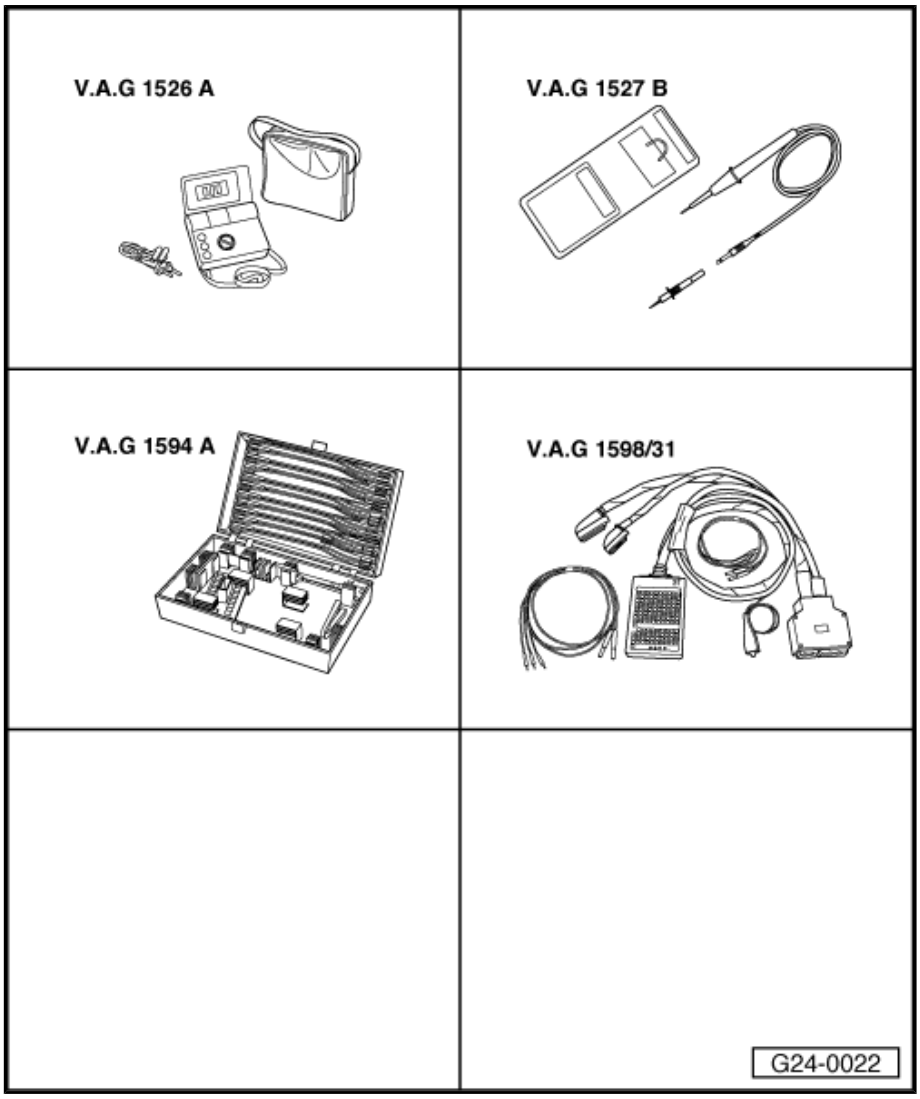

Protected by copyright. Copying for private or commercial purposes, in part or in whole, is not permitted unless authorised by AUDI AG. AUDI AG does not guarantee or accept any liability with respect to the correctness of information in this document. Copyright by AUDI AG.

5.5.1 Test requirements

- Control element fuse -S117- (secondary air inlet valves) in position -4- on relay and fuse carrier in electronics box (plenum chamber) OK.
- Fuel pump relay OK.
- Ignition off.

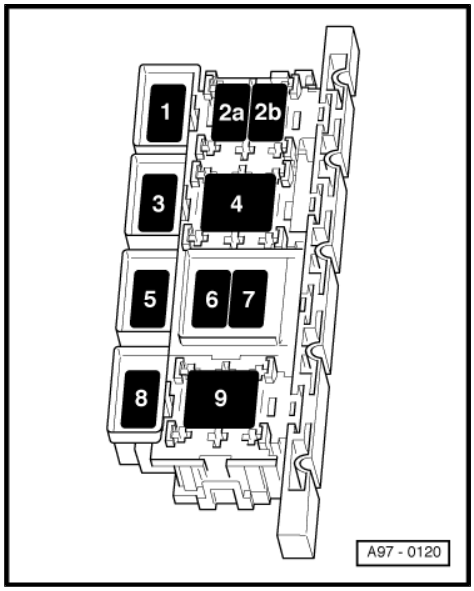

Note

The secondary air inlet valve -N112- and secondary air inlet valve 2 -N320- receive power supply via the fuel pump relay -J17- .

5.5.2 Procedure

Secondary air inlet valve -N112- for cylinder bank 1 (right-side):

– Remove cover (right-side) in engine compartment -arrows-.

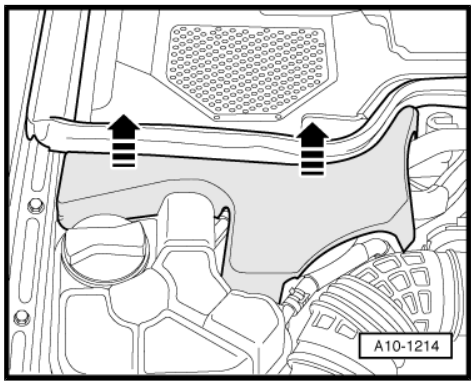

– Remove air hose (right-side) -arrows-.

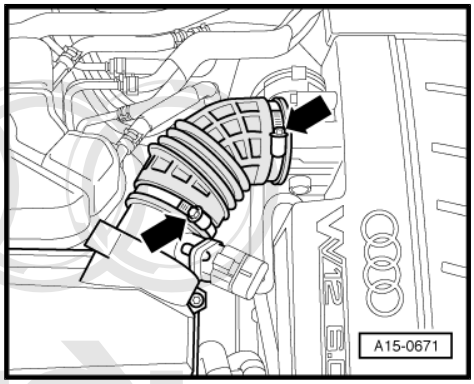

Protected by copyright. Copying for private or commercial purposes, in part or in whole, is not permitted unless authorised by AUDI AG. AUDI AG does not guarantee or accept any liability with respect to the correctness of information in this document. Copyright by AUDI AG.

Secondary air inlet valve 2 -N320- for cylinder bank 2 (left-side):

– Remove cover (left-side) in engine compartment -arrows-.

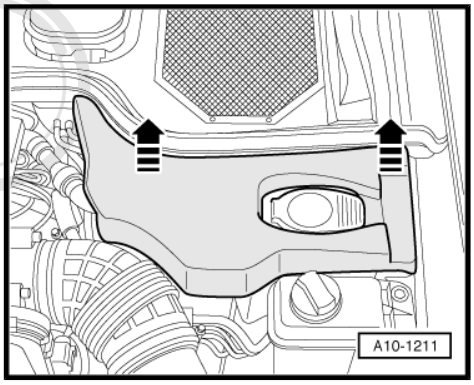

Protected by copyright. Copying for private or commercial purposes, in part or in whole, is not
permitted unless authorised by AUDI AG. AUDI AG does not guarantee or accept any liability
with respect to the correctness of information in this document. Copyright by AUDI AG.

– Remove air hose (left-side) -arrows-.

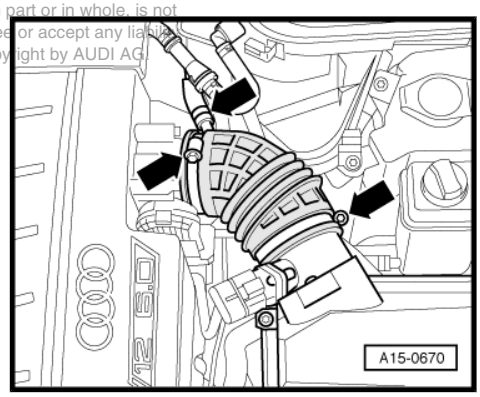

5.5.3 Checking internal resistance

– Unplug connector at secondary air inlet valve -N112- or secondary air inlet valve 2 -N320- -arrow-.

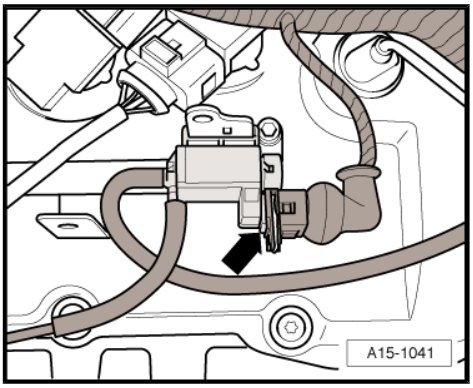

– Connect multimeter to valve to measure resistance.

♦ Specification: 25 ... 35 Ω

If the specification is not attained:

– Renew the relevant secondary air inlet valve.

If reading matches specification:

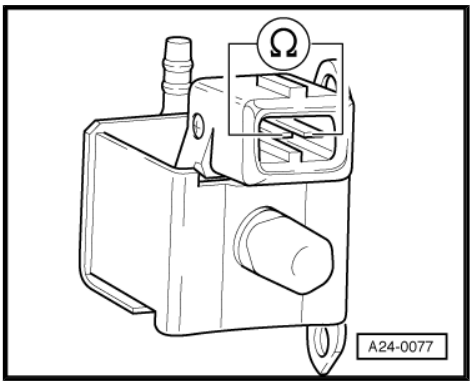

5.5.4 Checking voltage supply

– Connect voltage tester -V.A.G 1527 B- as follows:

Connector Contact	Measure against
-1-	Engine earth

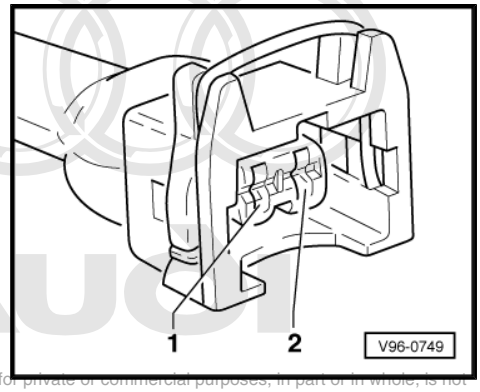

– Operate the starter briefly.

• The LED should light up.

– Switch off ignition.

If the LED does not light up:

– Use current flow diagram to check for open circuit in wiring from contact 1 of connector via fuse to fuel pump relay -J17-.

– If necessary repair wiring connection.

If the LED lights up:

Copyright by AUDI AG. Copying for private or commercial purposes, in part or in whole, is not permitted unless authorised by AUDI AG. AUDI AG does not guarantee or accept any liability with respect to the correctness of information in this document. Copyright by AUDI AG.

5.5.5 Testing control wiring

Secondary air inlet valve -N112- for cylinder bank 1 (right-side):

– Connect test box -V.A.G 1598/31- to connectors of wiring harness with black covering for engine control unit -J623- (in electronics box, left-side); the engine control unit should not be connected. Connect earth clip of test box to earth ⇒ Motronic injection and ignition system (12-cyl.); Rep. Gr. 24 .

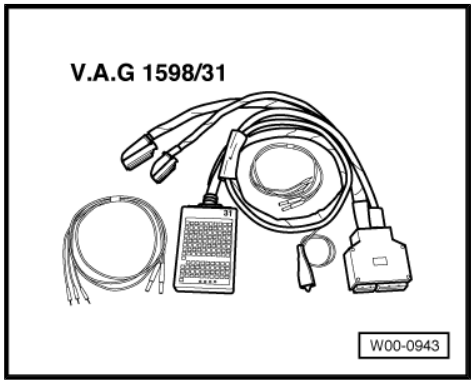

Secondary air inlet valve 2 -N320- for cylinder bank 2 (left-side):

– Connect test box -V.A.G 1598/31- to connectors of wiring harness with blue covering for engine control unit -J624- (in electronics box, right-side); the engine control unit should not be connected. Connect earth clip of test box to earth ⇒ Motronic injection and ignition system (12-cyl.); Rep. Gr. 24 .

Continuation for both sides:

– Check for open circuit in the following wiring using current flow diagram:

Connector Contact	Test box -V.A.G 1598/31- Socket
-2-	44

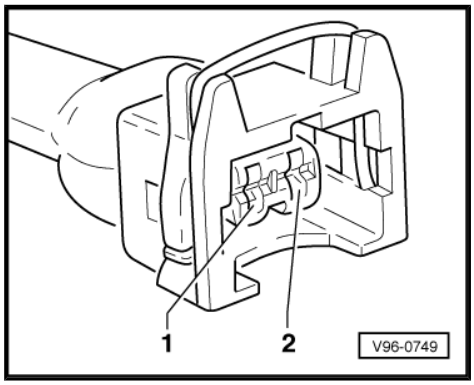

– Also check wire for short circuit to battery positive and earth.

– If necessary repair wiring connection.

If no fault in wire is detected:

– Renew the relevant engine control unit.

5.6 Checking secondary air pump relay -J299- , secondary air pump relay 2 -J545- and activation

Special tools and workshop equipment required

- Hand-held multimeter -V.A.G 1526 A-
- Voltage tester -V.A.G 1527 B-
- Adapter set -V.A.G 1594 A-
- Test box -V.A.G 1598/31-

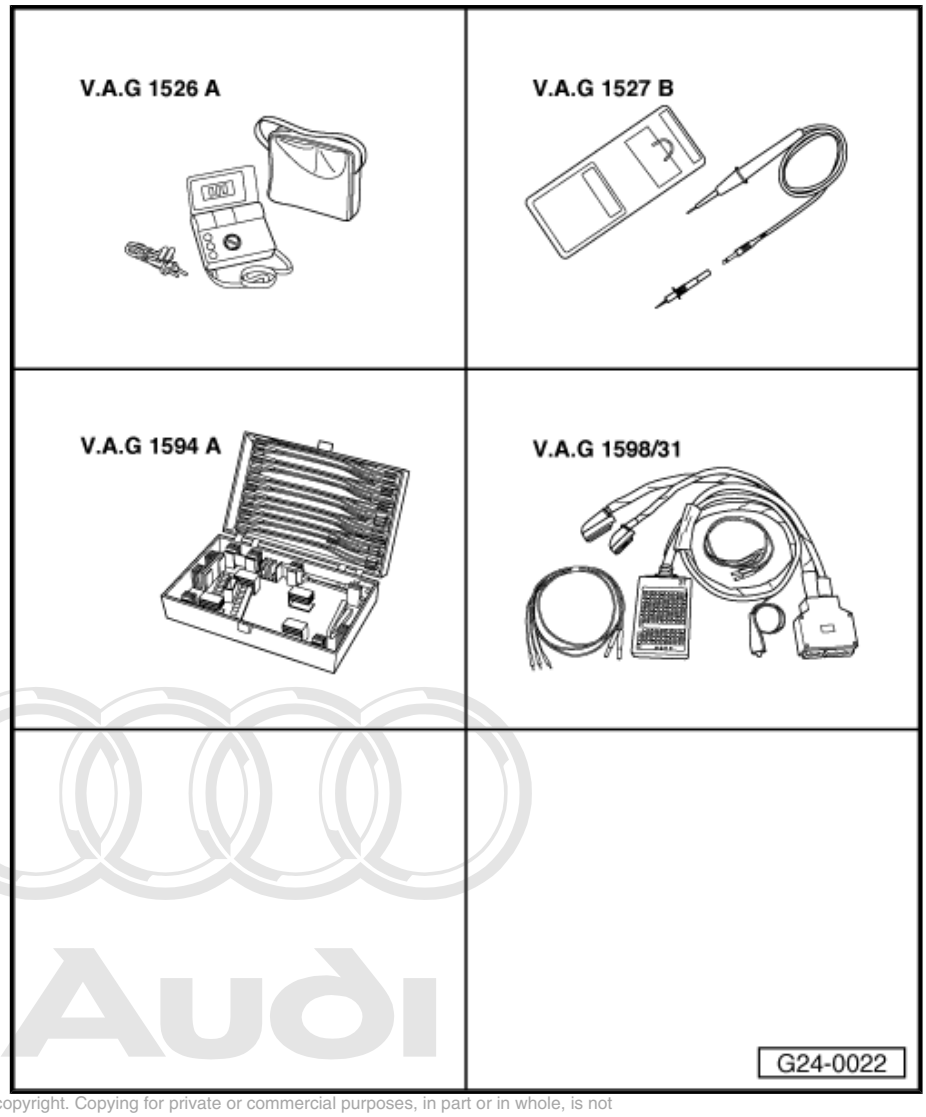

Protected by copyright. Copying for private or commercial purposes, in part or in whole, is not permitted unless authorised by AUDI AG. AUDI AG does not guarantee or accept any liability with respect to the correctness of information in this document. Copyright by AUDI AG.

5.6.1 Test requirements

- Battery voltage at least 12.5 V
- Secondary air pump fuse -S130- -Item 6- and secondary air pump fuse 2 -S284- (located above -S130-) in fuse carrier (A pillar, passenger's footwell) OK.
- Ignition off.

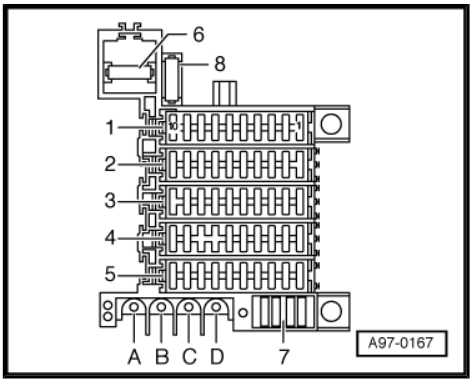

5.6.2 Test sequence

Secondary air pump relay -J299- for cylinder bank 1 (right-side):

– Connect test box -V.A.G 1598/31- to connectors of wiring harness with black covering for engine control unit -J623- (in electronics box, left-side); the engine control unit should not be connected. Connect earth clip of test box to earth ⇒ Motronic injection and ignition system (12-cyl.); Rep. Gr. 24 .

– Use leads from adapter set -V.A.G 1594 A- to bridge contacts 1 and 46 at test box.

– Switch on ignition.

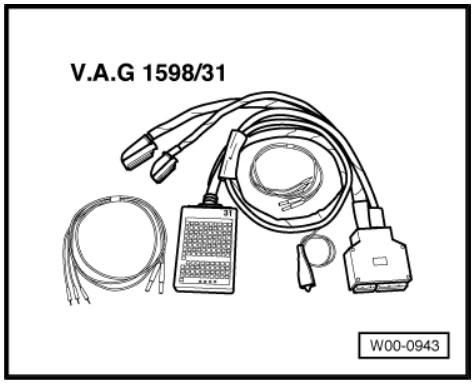

• The secondary air pump relay -J299- in position -2a/2b- (in relay and fuse carrier, electronics box/plenum chamber) should pick up and the secondary air pump motor -V101- should run.

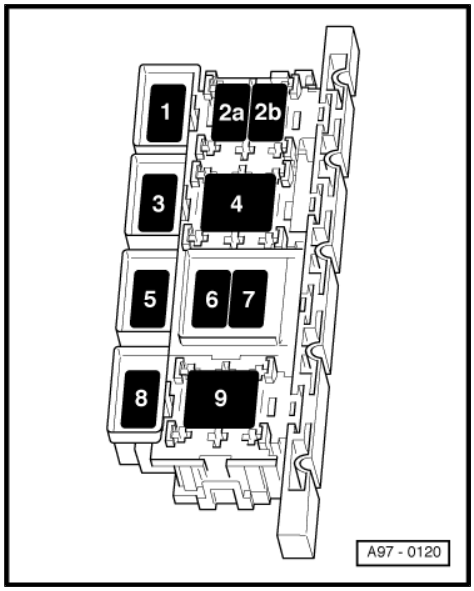

Secondary air pump relay 2 -J545- for cylinder bank 2 (left-side):

– Connect test box -V.A.G 1598/31- to connectors of wiring harness with blue covering for engine control unit -J624- (in electronics box, right-side); the engine control unit should not be connected. Connect earth clip of test box to earth ⇒ Motronic injection and ignition system (12-cyl.); Rep. Gr. 24 .

– Use leads from adapter set -V.A.G 1594 A- to bridge contacts 1 and 46 at test box.

– Switch on ignition.

• The secondary air pump relay 2 -J545- in position -9- (in relay and fuse carrier, electronics box/plenum chamber) should pick up and the secondary air pump motor 2 -V189- should run.

A- If the secondary air pump motor runs:

– Check voltage supply of secondary air pump relay ⇒ page 223 .

– Check activation of secondary air pump relay ⇒ page 224 .

B - If the secondary air pump motor does not run:

– Check voltage supply of secondary air pump motor ⇒ page 225 .

Protected by copyright. Copying for private or commercial purposes, in part or in whole, is not permitted unless authorised by AUDI AG. AUDI AG does not guarantee or accept any liability with respect to the correctness of information in this document. Copyright by AUDI AG.

5.6.3 Checking voltage supply of secondary air pump relay -J299- and secondary air pump relay 2 -J545-

– Unplug secondary air pump relay -J299- from position -2a/2b- or secondary air pump relay 2 -J299- from position -9-.

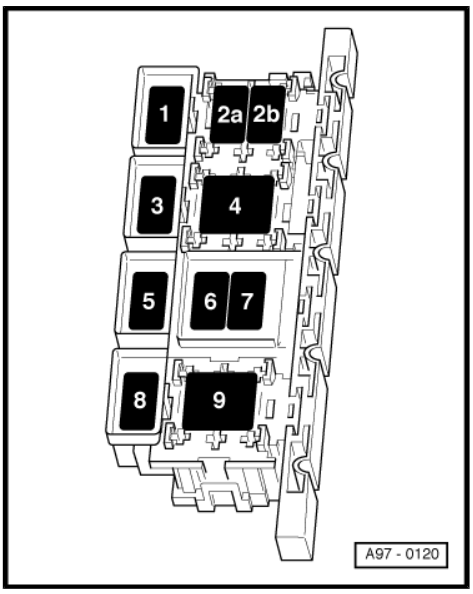

– Connect up multimeter as follows to measure voltage.

Relay and fuse carrier in electronics box (plenum chamber), position 2a/2b and 9 Contact	Measure to
2	Engine earth

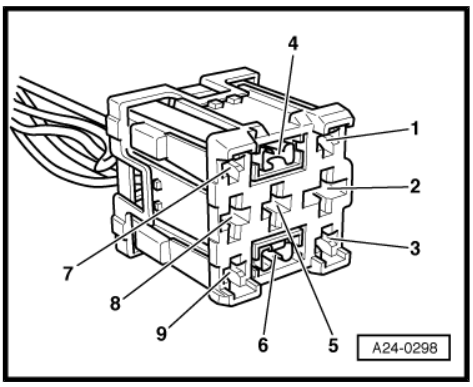

• Specification: approx. battery voltage

If specification is not reached:

– Use current flow diagram to check for open circuit in wiring from battery positive (terminal 30) via relevant fuse to corresponding relay for secondary air pump (in relay and fuse carrier, electronics box/plenum chamber).

– Connect up multimeter as follows to measure voltage.

Relay and fuse carrier in electronics box (plenum chamber), position 2a/2b and 9 Contact	Measure to
4	Engine earth

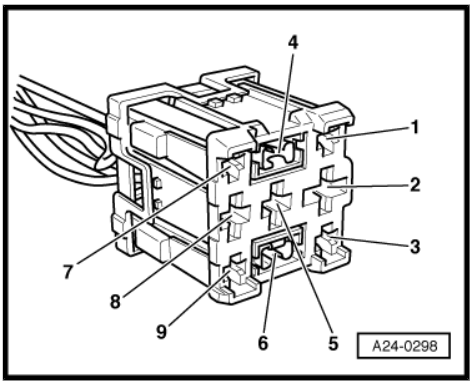

Protected by copyright. Copying for private or commercial purposes, in part or in whole, is not permitted unless authorised by AUDI AG. AUDI AG does not guarantee or accept any liability with respect to the correctness of information. Copyright by AUDI AG.

• Specification: approx. battery voltage

– Operate starter.

If specification is not reached:

– Use current flow diagram to check for open circuit in wiring from battery positive (terminal 30) via relevant fuse to corresponding relay for secondary air pump (in relay and fuse carrier, electronics box/plenum chamber).

5.6.4 Checking activation of secondary air pump relay -J299- and secondary air pump relay 2 -J545-

– Unplug secondary air pump relay -J299- from position -2a/2b- or secondary air pump relay 2 -J299- from position -9-.

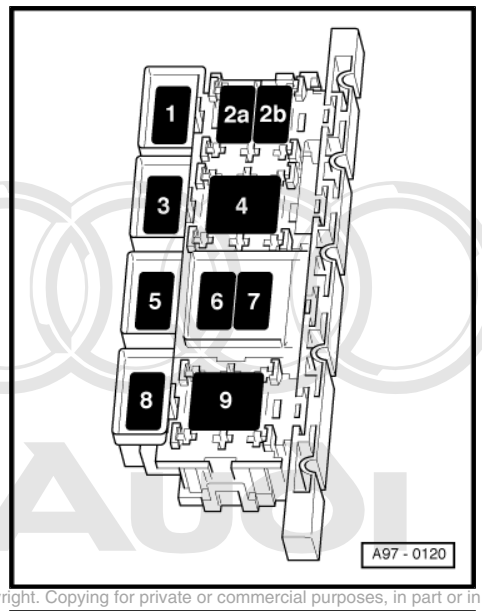

Secondary air inlet valve -N112- for cylinder bank 1 (right-side):

– Connect test box -V.A.G 1598/31- to connectors of wiring harness with black covering for engine control unit -J623- (in electronics box, left-side); the engine control unit should not be connected. Connect earth clip of test box to earth ⇒ Motronic injection and ignition system (12-cyl.); Rep. Gr. 24 .

Protected by copyright. Copying for private or commercial purposes, in part or in whole, is not permitted unless authorised by AUDI AG. AUDI AG does not guarantee or accept any liability with respect to the correctness of information in this document. Copyright by AUDI AG.

– Check for open circuit in the following wiring using current flow diagram:

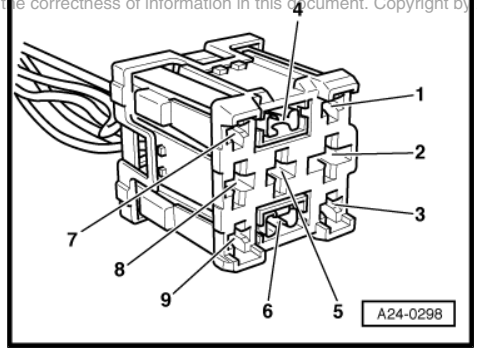

Relay and fuse carrier in electronics box (plenum chamber), position 2a/2b Contact	Test box
6	46

– Also check wire for short circuit to battery positive and earth.

Secondary air inlet valve 2 -N320- for cylinder bank 2 (left-side):

– Connect test box -V.A.G 1598/31- to connectors of wiring harness with blue covering for engine control unit -J624- (in electronics box, right-side); the engine control unit should not be connected. Connect earth clip of test box to earth ⇒ Motronic injection and ignition system (12-cyl.); Rep. Gr. 24 .

– Check for open circuit in the following wiring using current flow diagram:

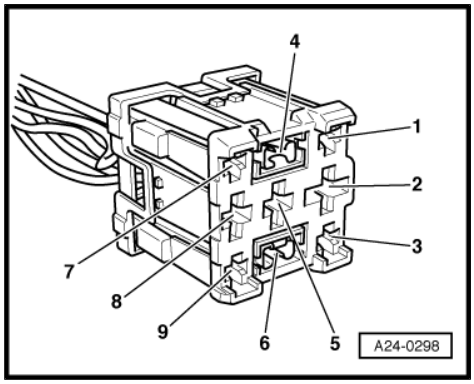

Relay and fuse carrier in electronics box (plenum chamber), position 9 Contact	Test box
6	46

– Also check wire for short circuit to battery positive and earth.

Continuation for both sides:

If no fault is found:

– Renew relevant secondary air pump relay.

5.6.5 Checking voltage supply of secondary air pump motor -V101- and secondary air pump motor 2 -V189-

Special tools and workshop equipment required

- Assembly tool -T10118- - only for secondary air pump motor -V101- , cylinder bank 1 (right-side)

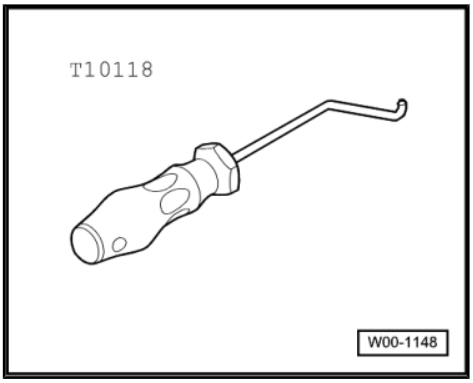

Secondary air pump motor -V101- for cylinder bank 1 (right-side):

– Remove cover (right-side) in engine compartment -arrows-.

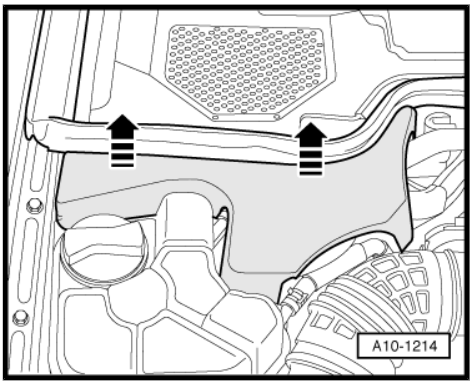

– Unbolt coolant expansion tank -arrows-.

– Unplug electrical connector for coolant shortage indicator switch -F66- at expansion tank (below).

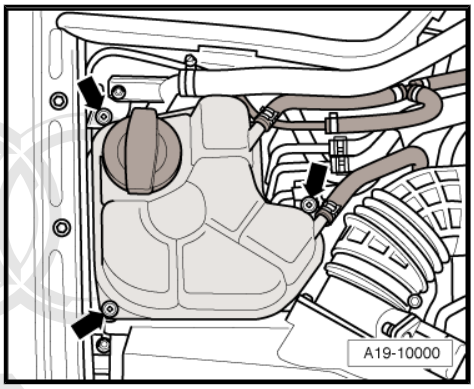

Note

- *The coolant hoses remain connected.*
- *Hot steam and hot coolant can be released when the coolant system is opened.*

– Unplug electrical connector -arrow- at secondary air pump motor -V101- using tool -T10118- .

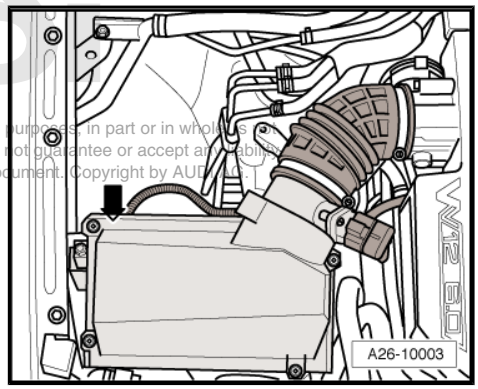

Note

Shown with coolant expansion tank removed for illustration purposes.

Protected by copyright. Copying for private or commercial purposes, in part or in whole, is not permitted unless authorised by AUDI AG. AUDI AG does not guarantee or accept any liability with respect to the correctness of information in this document. Copyright by AUDI AG.

– Connect voltage tester -V.A.G 1527 B- between contacts -1- and -2-.

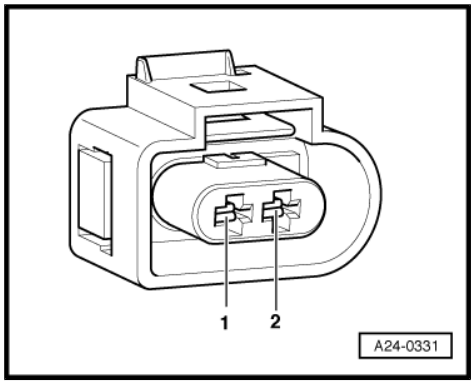

- Vehicle diagnostic, testing and information system -VAS 5051- with diagnosis lead -VAS 5051/1- is connected; vehicle self-diagnosis and vehicle system “01 - Engine electronics” is selected. When doing this the ignition must be switched on.

– Under selection menu -1- select the diagnostic function “03 - Final control diagnosis”.

– Press the button ⇨ until the secondary air pump relay -J299- is activated.

- LED should flash slowly.

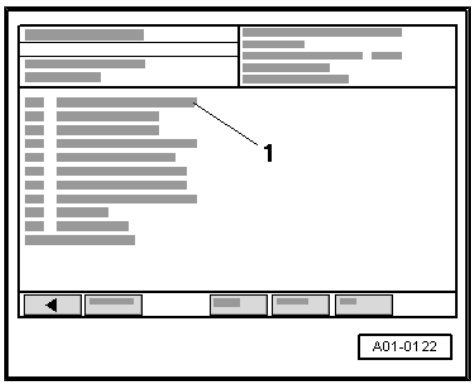

Note

Voltage testers with a low current draw do not go out completely between activation signals from engine control unit, but continue to glow slightly and become distinctly brighter on activation.

Protected by copyright. Copying for private or commercial purposes, in part or in whole, is not permitted unless authorised by AUDI AG. AUDI AG does not guarantee or accept any liability with respect to the correctness of information in this document. Copyright by AUDI AG.

– Exit function “03 - Final control diagnosis” by pressing the ⇦ key.

– Press the diagnostic function “06 - end output” and switch off the ignition.

If the LED does not flash:

– Use leads from adapter set -V.A.G 1594 A- to bridge contacts 1 and 46 at test box.

- The LED should light up.

If the LED does not light up:

– Use current flow diagram to check for open circuit in wiring leading from contact 2 of connector going to secondary air pump relay -J299- on relay carrier in electronics box (plenum chamber).

– Use current flow diagram to check for open circuit in wiring leading from contact 1 of connector to earth.

If no fault is found:

– Renew secondary air pump motor -V101- ; see Removing and installing secondary air pump ⇒ page 230 .

Secondary air pump motor 2 -V189- for cylinder bank 2 (left-side):

– Remove cover (left-side) in engine compartment -arrows-.

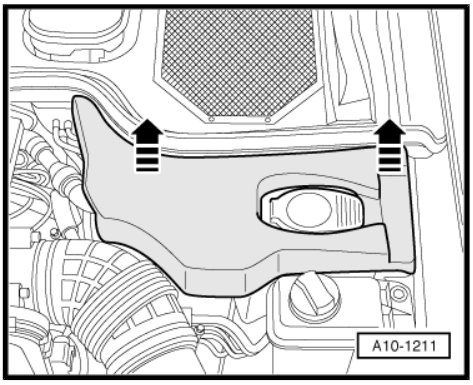

– Unscrew securing bolts for filler neck of windscreen washer fluid reservoir -2-.

– Unscrew bolts and detach reservoir -1- for power steering at bracket.

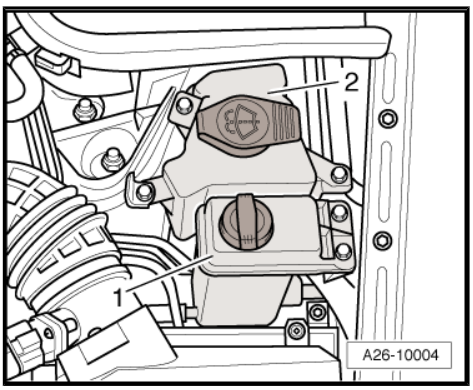

Note

The hoses on filler neck and on reservoir for power steering remain connected.

– Lay the filler neck for windscreen washer fluid reservoir forwards.

– Unplug electrical connector -arrow- at secondary air pump motor 2 -V189- .

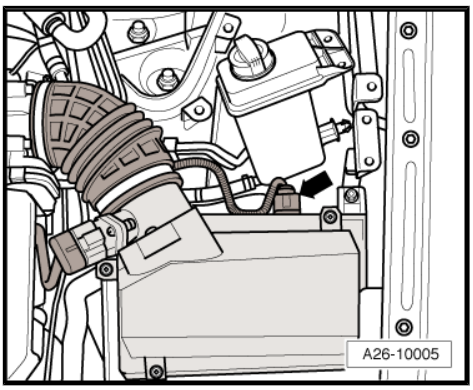

Protected by copyright. Copying for private or commercial purposes, in part or in whole, is not permitted unless authorised by AUDI AG. AUDI AG does not guarantee or accept any liability with respect to the correctness of information in this document. Copyright by AUDI AG.

– Connect voltage tester -V.A.G 1527 B- between contacts -1- and -2-.

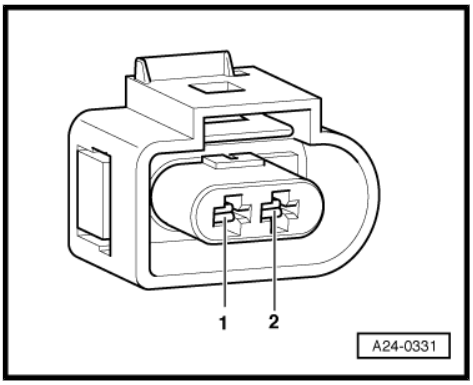

- Vehicle diagnostic, testing and information system -VAS 5051- with diagnosis lead -VAS 5051/1- is connected; vehicle self-diagnosis and vehicle system “11 - Engine electronics II” is selected. When doing this the ignition must be switched on.

– Under selection menu -1- select the diagnostic function “03 - Final control diagnosis”.

– Press the button ⇥ until the secondary air pump relay 2 -J545- is activated.

- LED should flash slowly.

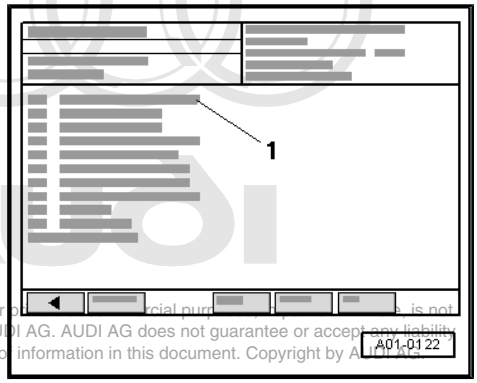

Protected by copyright. Copying for commercial purposes, hire, loan or sale is not permitted unless authorised by AUDI AG. AUDI AG does not guarantee or accept any liability with respect to the correctness of information in this document. Copyright by AUDI AG.

Note

Voltage testers with a low current draw do not go out completely between activation signals from engine control unit, but continue to glow slightly and become distinctly brighter on activation.

– Exit function “03 - Final control diagnosis” by pressing the ⇦ key.

– Press the diagnostic function “06 - end output” and switch off the ignition.

If the LED does not flash:

– Use leads from adapter set -V.A.G 1594 A- to bridge contacts 1 and 46 at test box.

- The LED should light up.

If the LED does not light up:

– Use current flow diagram to check for open circuit in wiring leading from contact 2 of connector going to secondary air pump relay 2 -J545- on relay carrier in electronics box (plenum chamber).

– Use current flow diagram to check for open circuit in wiring leading from contact 1 of connector to earth.

If no fault is found:

– Renew secondary air pump motor 2 -V189- ; see Removing and installing secondary air pump ⇒ page 230 .

5.7 Secondary air pump - exploded view of components

1 - Cover

2 - O-ring
- ❑ Renew

3 - Pressure hose
- ❑ To combination valve for secondary air

4 - Clip

5 - Bracket

6 - 9 Nm

7 - 9 Nm

8 - Washer

9 - Secondary air pump
- ❑ Secondary air pump motor -V101- for cylinder bank 1 (right-side) and secondary air pump motor 2 -V189- for cylinder bank 2 (left-side)
- ❑ Removing and installing ⇒ page 230

10 - Air filter element for secondary air pump
- ❑ Cleaning ⇒ page 229

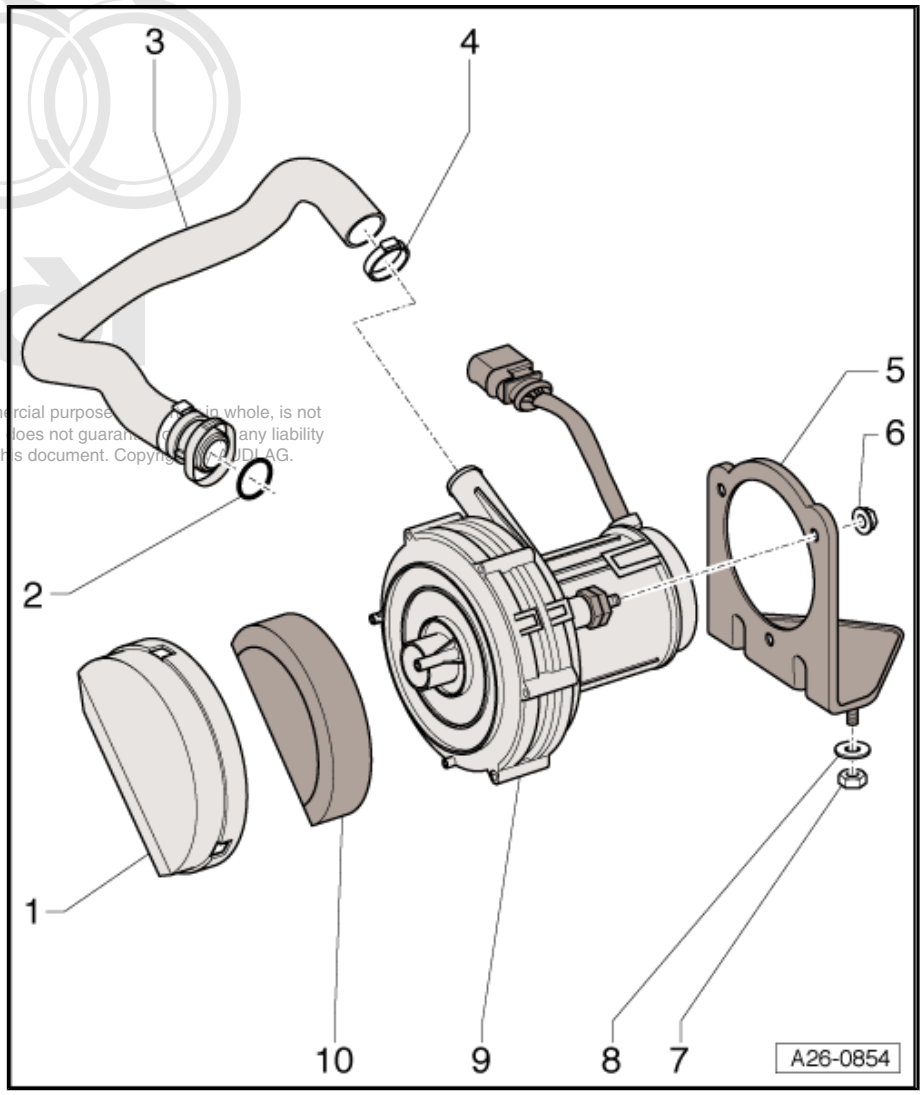

Protected by copyright. Copying for private or commercial purposes, in whole, is not permitted unless authorised by AUDI AG. AUDI AG does not guarantee or assume any liability with respect to the correctness of information in this document. Copyright by AUDI AG.

5.8 Cleaning air filter element for secondary air pump

Note

If the secondary air pump motor is running correctly but the air output is inadequate, the reason may be that the filter element is dirty.

5.8.1 Procedure

– Remove secondary air pump ⇒ page 230 .

– Carefully unclip cover -3- from the secondary air pump -1-.
– Wash the filter element with soap solution.
– Carefully dry the filter element and reinsert.
– Install secondary air pump ⇒ page 230 .

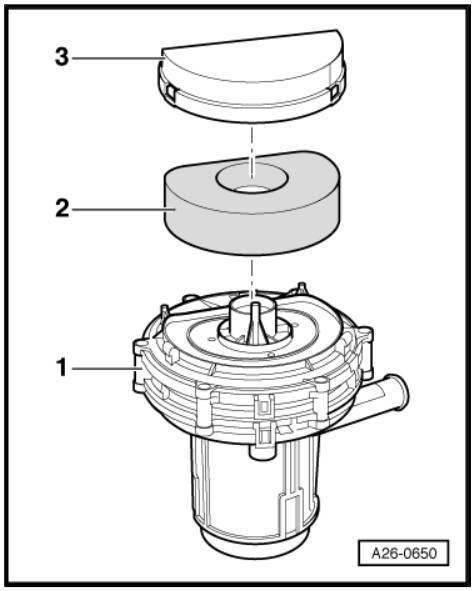

Protected by copyright. Copying for private or commercial purposes, in part or in whole, is not permitted unless authorised by AUDI AG. AUDI AG does not guarantee or accept any liability with respect to the correctness of information in this document. Copyright by AUDI AG.

5.9 Removing and installing secondary air pump

The secondary air pump for cylinder bank 1 (right-side) and cylinder bank 2 (left-side) is located in the corresponding air cleaner housing (bottom section). The following description corresponds to the removal and installation of the left-side secondary air pump. The work procedure for the other side of the vehicle is the same.

5.9.1 Removing

– Remove cover (left-side) in engine compartment -arrows-.

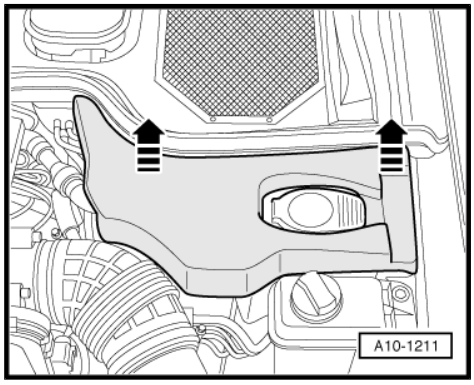

– Unclip cover -1- for air duct (left-side) on lock carrier in engine compartment.
– Remove air duct -2-.

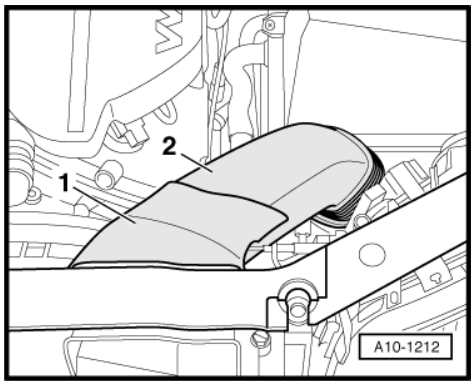

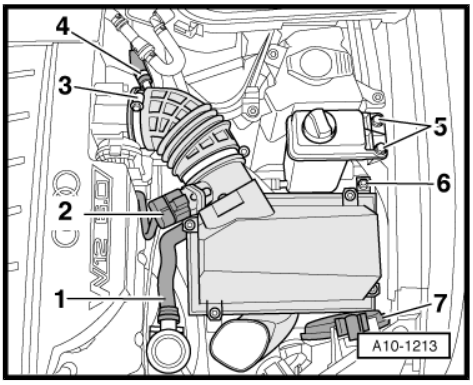

– Remove cover -7- for dipped beam headlights from headlight housing (left-side).
– Disconnect hose -1- at combination valve for secondary air.
– Unscrew bolts -5- and detach reservoir for power steering at bracket.
– Detach electrical connector -2- for air mass meter 2 -G246- .
– Detach hose -4- from air intake hose.
– Detach air intake hose -3- from intake manifold.
– Unscrew the 2 nuts -6-.
– Raise air cleaner housing slightly and unplug electrical connector on rear of air cleaner housing.
– Move electrical wiring at air cleaner housing clear.
– Take out air cleaner housing.

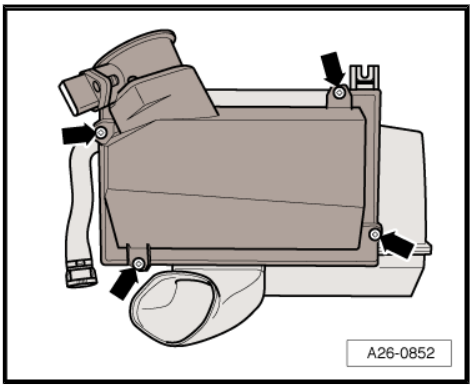

– Unscrew bolts -arrows- and remove top section of air cleaner housing.
– Take out filter element.

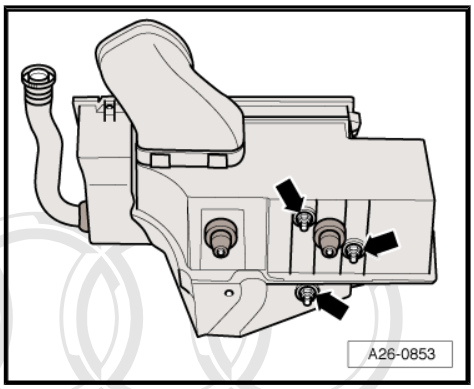

– Unscrew nuts -arrows-.

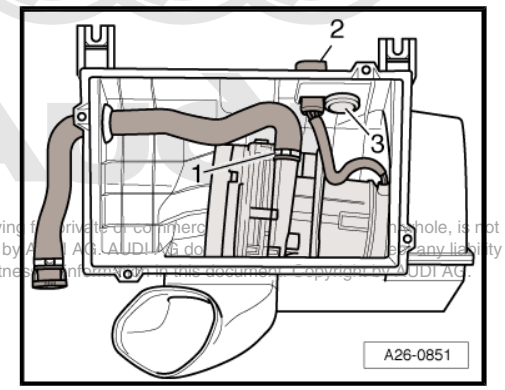

– Disconnect hose -1- from secondary air pump.
– Pull off grommet -3-, move electrical connector -2- clear and remove secondary air pump from bottom section of air cleaner housing.

Protected by copyright. Copying for private or commercial purposes, in whole or in part, is not permitted unless authorised by AUDI AG. AUDI AG does not guarantee or assume any liability with respect to the correctness of information in this document. Copyright by AUDI AG.

5.9.2 Installing

– Installation is carried out in the reverse order; note the following:

Note

Secure all hose connections with the correct type of hose clips (same as original equipment) ⇒ Parts catalogue.

5.9.3 Tightening torques

Component	Nm
Secondary air pump to air cleaner housing (bottom section)	9
Air cleaner housing to bracket for secondary air pump	9

5.10 Removing and installing combination valve for secondary air system (left-side)

5.10.1 Removing

– Unclip cover -1- for air duct (left-side) on lock carrier in engine compartment.

– Remove air duct -2-.

Protected by copyright. Copying for private or commercial purposes, in part or in whole, is not permitted unless authorised by AUDI AG. AUDI AG does not guarantee or accept any liability with respect to the correctness of information in this document. Copyright by AUDI AG.

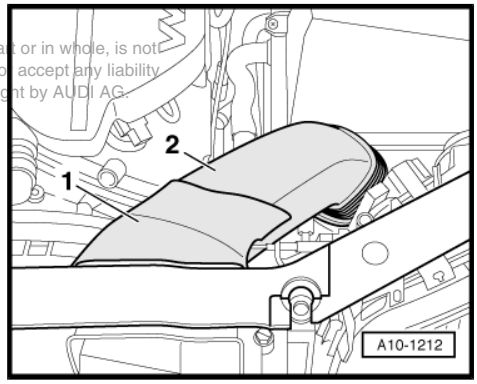

– Disconnect vacuum hose -2- and pressure hose -3-.

– Unscrew bolts -1-, -4- and -5- and remove combination valve together with flange.

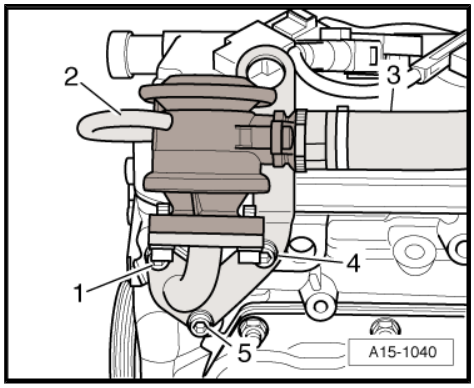

5.10.2 Installing

– Installation is carried out in the reverse order; note the following:

Note

Renew seals and O-rings.

5.10.3 Tightening torques

Component		Nm
Combination valve for secondary air to flange		9
Combination valve for secondary air	M 6	9
with flange to cylinder head	M 8	22

Reproduction or copying for private or commercial purposes, in part or in whole, is not permitted unless authorised by AUDI AG. AUDI AG does not guarantee or accept any liability with respect to the correctness of information in this document. Copyright by AUDI AG.

5.11 Removing and installing combination valve for secondary air system (right-side)

5.11.1 Removing

– Remove cover (right-side) in engine compartment -arrows-.

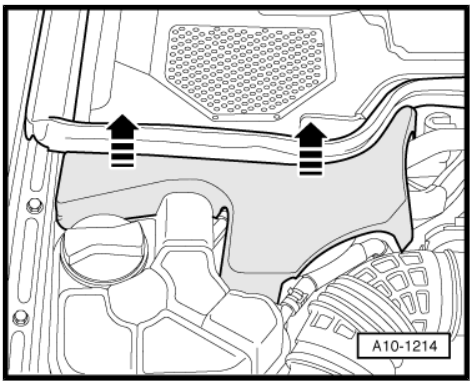

– Unclip cover -1- for air duct (right-side) on lock carrier in engine compartment.

– Remove air duct -2-.

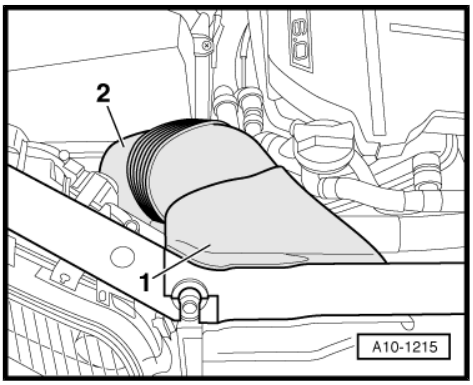

– Remove cover -1- for dipped beam headlights from headlight housing (right-side).
– Disconnect hose -6- at combination valve for secondary air.
– Unbolt coolant expansion tank -3-.
– Unplug electrical connector for coolant shortage indicator switch -F66- at expansion tank (below).
– Detach electrical connector -5- for air mass meter -G70- .
– Detach air intake hose -4- from intake manifold.
– Unscrew the 2 nuts -2-.
– Raise air cleaner housing slightly and unplug electrical connector on rear of air cleaner housing.
– Move electrical wiring at air cleaner housing clear and remove air cleaner housing.

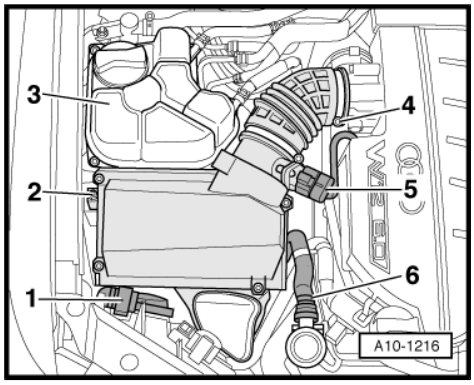

– Detach vacuum hose -2-.
– Unscrew bolts -1- and -3- and remove combination valve together with flange.

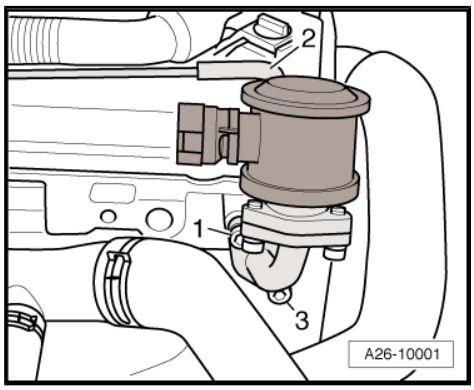

Protected by copyright. Copying for private or commercial purposes, in part or in whole, is not permitted unless authorised by AUDI AG. AUDI AG does not guarantee or accept any liability with respect to the correctness of information in this document. Copyright by AUDI AG.

5.11.2 Installing

– Installation is carried out in the reverse order; note the following:

Note

Renew seals and O-rings.

5.11.3 Tightening torques

Component	Nm
Combination valve for secondary air to flange	9
Combination valve for secondary air with flange to cylinder head	9