Workshop Manual

Audi A8 2010 ➤

12-cylinder direct petrol injection engine (6.3 ltr. 4-valve)									
Engine ID	CEJA	CTN A							

Edition 03.2014

Protected by copyright. Copying for private or commercial purposes, in part or in whole, is not permitted unless authorised by AUDI AG. AUDI AG does not guarantee or accept any liability with respect to the correctness of information in this document. Copyright by AUDI AG.

List of Workshop Manual Repair GroupsList of Workshop Manual Repair GroupsList of Workshop Manual Repair Groups

Protected by copyright. Copying for private or commercial purposes, in part or in whole, is not permitted unless authorised by AUDI AG. AUDI AG does not guarantee or accept any liability with respect to the correctness of information in this document. Copyright by AUDI AG.

Repair Group

00 - Technical data
10 - Removing and installing engine
13 - Crankshaft group
15 - Cylinder head, valve gear
17 - Lubrication
19 - Cooling
24 - Mixture preparation - injection
26 - Exhaust system
28 - Ignition system

Technical information should always be available to the foremen and mechanics, because their careful and constant adherence to the instructions is essential to ensure vehicle road-worthiness and safety. In addition, the normal basic safety precautions for working on motor vehicles must, as a matter of course, be observed.

All rights reserved.
No reproduction without prior agreement from publisher.

Copyright © 2014 Audi AG, Ingolstadt

D3E8030ED2D

Contents

00 - Technical data 1
- **1 Identification** 1
- 1.1 Engine identification number/engine data 2
- **2 General notes** 3
- 2.1 Numbering of cylinders 3
- **3 Safety precautions** 4
- 3.1 Safety precautions when working on the fuel supply system 4
- 3.2 Safety precautions when working on vehicles with start/stop system 5
- 3.3 Safety precautions when using testers and measuring instruments during a road test 5
- 3.4 Safety precautions when working on the subframe 6
- 3.5 Safety precautions when working on the cooling system 6
- 3.6 Safety precautions when working on the ignition system 6
- **4 Repair instructions** 8
- 4.1 Rules for cleanliness 8
- 4.2 Foreign particles in engine 8
- 4.3 Contact corrosion 8
- 4.4 Routing and attachment of pipes, hoses and wiring 9
- 4.5 Installing radiators and condensers 9

10 - Removing and installing engine 10
- **1 Removing and installing engine** 10
- 1.1 Removing engine 10
- 1.2 Separating engine and gearbox 31
- 1.3 Securing engine to engine and gearbox support 37
- 1.4 Installing engine 41
- **2 Assembly mountings** 48
- 2.1 Exploded view - assembly mountings 48
- 2.2 Supporting engine in installation position 50
- 2.3 Removing and installing engine mountings 52
- 2.4 Removing and installing gearbox mounting 59
- **3 Engine cover panel** 62
- 3.1 Removing and installing engine cover panel 62

13 - Crankshaft group 63
- **1 Cylinder block (pulley end)** 63
- 1.1 Exploded view - poly V-belt drive 63
- 1.2 Removing and installing poly V-belt 66
- 1.3 Checking alignment of pulley 68
- 1.4 Removing and installing vibration damper 69
- 1.5 Removing and installing bracket for ancillaries 70
- 1.6 Renewing crankshaft oil seal (pulley end) 74
- **2 Cylinder block (gearbox end)** 76
- 2.1 Exploded view - cylinder block (gearbox end) 76
- 2.2 Removing and installing drive plate 76
- 2.3 Removing and installing sender wheel 78
- 2.4 Checking sender wheel 78
- 2.5 Renewing crankshaft oil seal (gearbox end) 79

15 - Cylinder head, valve gear 82
- **1 Timing chain cover** 82
- 1.1 Exploded view - timing chain cover 82
- 1.2 Renewing seals for studs 84

Protected by copyright. Copying for private or commercial purposes, in part or in whole, is not permitted unless authorised by AUDI AG. AUDI AG does not guarantee or accept any liability with respect to the correctness of information in this document. Copyright by AUDI AG.

1.3 Removing and installing timing chain cover . . . 85
2 Chain drive . . . 93
2.1 Exploded view - camshaft timing chains . . . 93
2.2 Exploded view - drive chain for valve gear . . . 96
2.3 Removing camshaft timing chain from camshafts . . . 96
2.4 Removing and installing camshaft timing chain . . . 105
2.5 Removing and installing drive chain for valve gear . . . 114
3 Cylinder head . . . 116
3.1 Exploded view - cylinder head . . . 116
3.2 Removing and installing cylinder head . . . 119
3.3 Removing and installing cylinder head cover . . . 127
3.4 Checking compression . . . 131
4 Valve gear . . . 133
4.1 Exploded view - valve gear . . . 133
4.2 Measuring axial clearance of camshaft . . . 137
4.3 Measuring radial clearance of camshaft . . . 138
4.4 Removing and installing camshaft . . . 138
4.5 Removing and installing camshaft adjuster . . . 147
4.6 Removing and installing valve stem oil seals . . . 149
5 Inlet and exhaust valves . . . 157
5.1 Checking valve guides . . . 157
5.2 Checking valves . . . 158
5.3 Valve dimensions . . . 158

17 - Lubrication . . . 159
1 Sump/oil pump . . . 159
1.1 Exploded view - sump/oil pump . . . 159
1.2 Engine oil . . . 162
1.3 Removing and installing sump (bottom section) . . . 162
1.4 Removing and installing sump (top section) . . . 165
1.5 Removing and installing oil pump . . . 175
1.6 Removing and installing oil level and oil temperature sender G266 . . . 176
2 Engine oil cooler . . . 177
2.1 Removing and installing engine oil cooler . . . 177
3 Oil filter/oil pressure switches . . . 179
3.1 Exploded view - oil pressure switches/crankcase breather system . . . 179
3.2 Removing and installing oil pressure switch F22 . . . 180
3.3 Removing and installing oil pressure switch for reduced oil pressure F378 . . . 181
3.4 Checking oil pressure . . . 182

19 - Cooling . . . 183
1 Cooling system/coolant . . . 183
1.1 Connection diagram - coolant hoses . . . 183
1.2 Checking cooling system for leaks . . . 186
1.3 Draining and filling cooling system . . . 188
2 Coolant pump/thermostat assembly . . . 196
2.1 Exploded view - coolant pump . . . 196
2.2 Exploded view - thermostat . . . 197
2.3 Removing and installing electrical coolant pump . . . 197
2.4 Removing and installing coolant pump . . . 198
2.5 Removing and installing thermostat . . . 200
2.6 Checking thermostat . . . 204
2.7 Removing and installing coolant temperature sender G62 . . . 204
3 Coolant pipes . . . 206

Protected by copyright. Copying for private or commercial purposes, in part or in whole, is not permitted unless authorised by AUDI AG. AUDI AG does not guarantee or accept any liability with respect to the correctness and completeness of this document. Copyright by AUDI AG.

3.1 Exploded view - coolant pipes . . . 206
3.2 Removing and installing coolant pipes . . . 207

4 Radiators/radiator fans . . . 220
4.1 Exploded view - radiator/radiator fans . . . 220
4.2 Exploded view - auxiliary radiator . . . 223
4.3 Removing and installing radiator . . . 223
4.4 Removing and installing radiator fans . . . 228
4.5 Removing and installing auxiliary radiator . . . 229

24 - Mixture preparation - injection . . . 232

1 Injection system . . . 232
1.1 Overview of fitting locations - injection system . . . 232
1.2 Reducing pressure in high-pressure section of injection system . . . 241
1.3 Filling and bleeding fuel system . . . 241
1.4 Checking fuel system for leaks . . . 242

2 Air cleaner . . . 244
2.1 Exploded view - air cleaner housing . . . 244
2.2 Removing and installing air cleaner housing . . . 245

3 Intake manifold . . . 248
3.1 Exploded view - intake manifold . . . 248
3.2 Removing and installing intake manifold . . . 249
3.3 Removing and installing throttle valve module J338 / J544 . . . 250

4 Injectors . . . 252
4.1 Exploded view - fuel rail with injectors . . . 252
4.2 Removing and installing injectors . . . 253
4.3 Cleaning injectors . . . 260

5 Senders and sensors . . . 262
5.1 Removing and installing fuel pressure sender G247 / G624 . . . 262
5.2 Removing and installing air mass meter . . . 262
5.3 Removing and installing fuel pressure sender for low pressure G410 . . . 263

6 High-pressure pump . . . 264
6.1 Exploded view - high-pressure pump . . . 264
6.2 Removing and installing high-pressure pump . . . 265
6.3 Removing and installing high-pressure pipe . . . 270

7 Lambda probe . . . 274
7.1 Exploded view - Lambda probe . . . 274
7.2 Removing and installing Lambda probe . . . 275

8 Engine control unit . . . 280
8.1 Wiring and component check . . . 280
8.2 Removing and installing engine control unit J623 / J624 . . . 282

26 - Exhaust system . . . 284

1 Exhaust pipes/silencers . . . 284
1.1 Exploded view - silencers . . . 284
1.2 Separating exhaust pipes/silencers . . . 286
1.3 Removing and installing front silencers . . . 287
1.4 Removing and installing silencers . . . 288
1.5 Stress-free alignment of exhaust system . . . 289
1.6 Checking exhaust system for leaks . . . 290
1.7 Checking vacuum unit for exhaust flap . . . 290
1.8 Removing and installing exhaust flap control unit J883 / J945 . . . 291

2 Secondary air system . . . 293
2.1 Exploded view - secondary air system . . . 293
2.2 Removing and installing secondary air pump motor V101 / V189 . . . 296

Protected by copyright. Copying for private or commercial purposes, in part or in whole, is not permitted unless authorised by AUDI AG. AUDI AG does not guarantee or accept any liability with respect to the correctness of information in this document. Copyright by AUDI AG.

2.3 Checking combination valve 296
2.4 Removing and installing combination valve 298
2.5 Removing and installing senders for secondary air pressure G609 / G610 298
3 Exhaust manifolds 300
3.1 Exploded view - exhaust manifold 300
3.2 Renewing exhaust manifold gaskets 301
3.3 Removing and installing exhaust manifold 303

28 - Ignition system 312
1 Ignition system 312
1.1 Exploded view - ignition system 312
1.2 Test data, spark plugs 313
1.3 Removing and installing ignition coils with output stages 313
1.4 Removing and installing knock sensor 314
1.5 Removing and installing Hall senders 316
1.6 Removing and installing engine speed sender G28 317

Protected by copyright. Copying for private or commercial purposes, in part or in whole, is not permitted unless authorised by AUDI AG. AUDI AG does not guarantee or accept any liability with respect to the correctness of information in this document. Copyright by AUDI AG.

00 – Technical data

1 Identification

(ARL003742; Edition 03.2014)

Protected by copyright. Copying for private or commercial purposes, in part or in whole, is not permitted unless authorised by AUDI AG. AUDI AG does not guarantee or accept any liability with respect to the correctness of information in this document. Copyright by AUDI AG.

⇒ “1.1 Engine identification number/engine data”, page 2

1.1 Engine identification number/engine data

Engine number

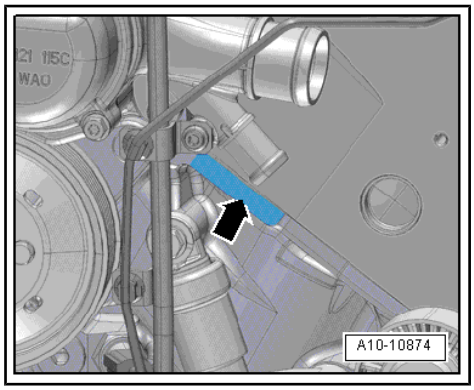

- The engine number (“engine code letters” and “serial number”) can be found on the cylinder block at the front left -arrow-.
- Starting with the letter “C”, the engine codes consist of 4 letters.
- The first 3 characters of the engine code stand for the engine capacity and the mechanical construction and design. They are stamped on the cylinder block, together with the serial number.
- The 4th character indicates the power output and torque of the engine, and is determined by the engine control unit.

Note

- *The 4-character engine code can be found on the type plate (in versions for some countries only) and on the vehicle data sticker and the engine control unit.*
- *Fitting locations of the type plate (certain countries only) and the vehicle data sticker ⇒ Maintenance ; Booklet 410 .*

Engine data

Code letters		CEJA/CTNA
Capacity	ltr.	6.299
Power output	kW at rpm	368/6200
Torque	Nm at rpm	625/4750
Bore	∅ mm	86.0
Stroke	mm	90.368
Compression ratio		11.8
RON	at least	98 [1)]
Injection/ignition system		Bosch Motronic
Firing order		1-7-5-11-3-9-6-12-2-8-4-10
Turbocharging/supercharging		no
Knock control		4 sensors
Lambda control		4 probes before catalytic converter 4 probes after catalytic converter
Variable valve timing		Inlet Exhaust
Intake manifold changeover		no
Secondary air system		yes
Valves per cylinder		4

- [1)] Unleaded premium RON 95 can also be used, but results in reduced power

Protected by copyright. Copying for private or commercial purposes, in part or in whole, is not permitted unless authorised by AUDI AG. AUDI AG does not guarantee or accept any liability with respect to the correctness of information in this document. Copyright by AUDI AG.

2 General notes

⇒ “2.1 Numbering of cylinders”, page 3

2.1 Numbering of cylinders

Cylinder arrangement on W12 engine

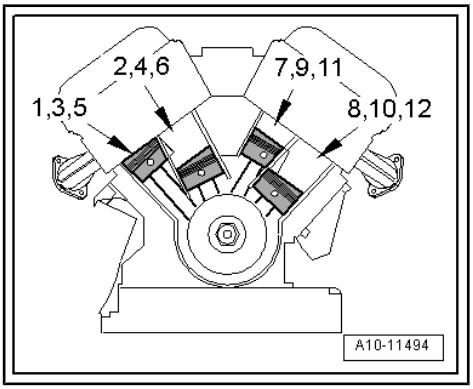

Protected by copyright. Copying for private or commercial purposes, in part or in whole, is not permitted unless authorised by AUDI AG. AUDI AG does not guarantee or accept any liability with respect to the correctness of information in this document. Copyright by AUDI AG.

3 Safety precautions

⇒ “3.1 Safety precautions when working on the fuel supply system”, page 4

⇒ “3.2 Safety precautions when working on vehicles with start/stop system”, page 5

⇒ “3.3 Safety precautions when using testers and measuring instruments during a road test”, page 5

⇒ “3.4 Safety precautions when working on the subframe”, page 6

⇒ “3.5 Safety precautions when working on the cooling system”, page 6

⇒ “3.6 Safety precautions when working on the ignition system”, page 6

3.1 Safety precautions when working on the fuel supply system

Please note the following warnings when working on the fuel supply system:

WARNING

The fuel system operates at extremely high pressure. This can cause injury.

- *The fuel pressure in the high-pressure section of the injection system must be reduced to a residual pressure prior to opening the system ⇒ page 241 .*
- *Wrap a clean cloth around the connection and carefully loosen the connection to allow the residual pressure to dissipate.*

Escaping fuel can cause a risk.

- *The power supply for the fuel system pressurisation pump - G6- must be disconnected before opening the fuel system, since -G6- will be activated briefly when the driver's door is opened with the battery still connected.*
- *Disconnect power supply by removing fuse for fuel pump control unit - J538- /fuel delivery unit ⇒ Current flow diagrams, Electrical fault finding and Fitting locations, or disconnect battery.*

Protected by copyright. Copying for private or commercial purposes, in part or in whole, is not permitted unless authorised by AUDI AG. AUDI AG does not guarantee or accept any liability with respect to the correctness of information in this document. Copyright by AUDI AG.

Observe the following to prevent injuries to persons and damage to the injection and ignition system:

- Always switch off the ignition before connecting or disconnecting electrical wiring for the injection or ignition system or tester cables.
- Always switch off ignition before washing engine.
- Erase any entries in event memory resulting from testing or installation ⇒ Vehicle diagnostic tester, `Interrogate event memory`, then `Generate readiness code`.

Caution

To prevent irreparable damage to the electronic components when disconnecting the battery:

- *Observe notes on procedure for disconnecting the battery.*
- *Always switch off the ignition before disconnecting the battery ⇒ Electrical system; Rep. gr. 27 ; Battery; Disconnecting and connecting battery .*

3.2 Safety precautions when working on vehicles with start/stop system

When performing repairs on vehicles with start/stop system, note the following:

WARNING

Risk of injury due to automatic engine start on vehicles with start/stop system.

- *On vehicles with activated start/stop system (this is indicated by a message in the instrument cluster display), the engine may start automatically on demand.*
- *Therefore it is important to ensure that the start/stop system is deactivated when performing repairs (switch off ignition, if required switch on ignition again).*

3.3 Safety precautions when using testers and measuring instruments during a road test

Protected by copyright. Copying for private or commercial purposes, in part or in whole, is not permitted unless authorised by AUDI AG. AUDI AG does not guarantee or accept any liability with respect to the correctness of information in this document. Copyright by AUDI AG.

Note the following if testers and measuring instruments have to be used during a road test:

WARNING

Accidents can be caused if the driver is distracted by test equipment while road-testing, or if test equipment is not properly secured.

Persons sitting in the front passenger's seat could be injured if the airbag is triggered in an accident.

- *The use of test equipment while driving causes distraction.*
- *There is an increased risk of injury if test equipment is not secured.*
- *Test equipment must always be secured on the rear seat with a strap and operated from the rear seat by a second person.*

3.4 Safety precautions when working on the subframe

Please note the following warnings when working on the subframe:

> ⚠ **Caution**
>
> *Risk of damage to running gear components.*
>
> - *The vehicle must NOT be lowered onto its wheels if the engine/gearbox mountings, steering rack or subframe cross brace are not properly installed.*
> - *The vehicle must NOT be supported by applying a trolley jack or similar to the subframe or subframe cross brace.*

Protected by copyright. Copying for private or commercial purposes, in part or in whole, is not permitted. Compiled from AUDI AG production materials. No liability with respect to the correctness of information in this document. Copyright by AUDI AG.

3.5 Safety precautions when working on the cooling system

When working on the cooling system note the following warnings:

> ⚠ **WARNING**
>
> *Hot steam/hot coolant can escape - risk of scalding.*
>
> - *The cooling system is under pressure when the engine is hot.*
> - *To allow pressure to dissipate, cover filler cap on coolant expansion tank with cloth and open carefully.*
>
> *Risk of injury as the radiator fans may start up automatically.*
>
> - *Unplug electrical connectors before starting to work in the area of radiator cowl.*

> ⚠ **Caution**
>
> *Overheating can occur if the filler cap is not fitted properly.*
>
> - *The filler cap must engage positively and audibly when it is closed.*

3.6 Safety precautions when working on the ignition system

To prevent injuries to persons and/or irreparable damage to the fuel injection and ignition system, the following must be noted:

- Persons wearing a cardiac pacemaker must at all times maintain a safe distance from high-voltage components such as the ignition system and xenon headlights.
- Always switch off the ignition before connecting or disconnecting electrical wiring for the injection or ignition system or tester cables.
- Erase any entries in event memory resulting from testing or installation ⇒ Vehicle diagnostic tester, `Interrogate event memory`, then `Generate readiness code`.
- Always switch off the ignition before cleaning the engine.

- Always switch off the ignition before connecting or disconnecting the battery, otherwise the engine control unit may be damaged.
- If you want to turn over the engine at cranking speed without actually starting it (e.g. compression test), first unplug the connectors from the ignition coils. In addition, remove fuse for fuel pump control unit - J538- ; for identification of fuses refer to ⇒ Current flow diagrams, Electrical fault finding and Fitting locations.

Caution

To prevent irreparable damage to the electronic components when disconnecting the battery:

- *Observe notes on procedure for disconnecting the battery.*
- *Always switch off the ignition before disconnecting the battery ⇒ Electrical system; Rep. gr. 27 ; Battery; Disconnecting and connecting battery .*

Protected by copyright. Copying for private or commercial purposes, in part or in whole, is not permitted unless authorised by AUDI AG. AUDI AG does not guarantee or accept any liability with respect to the correctness of information in this document. Copyright by AUDI AG.

4 Repair instructions

⇒ “4.1 Rules for cleanliness”, page 8

⇒ “4.2 Foreign particles in engine”, page 8

⇒ “4.3 Contact corrosion”, page 8

⇒ “4.4 Routing and attachment of pipes, hoses and wiring”, page 9

⇒ “4.5 Installing radiators and condensers”, page 9

4.1 Rules for cleanliness

Even small amounts of dirt can cause malfunctions. For this reason, please observe the following rules when working on the fuel supply system and injection system:

- Carefully clean connection points and the surrounding area with engine cleaner or brake cleaner and dry thoroughly before opening.
- Immediately seal open lines and connections with clean plugs, for example from engine bung set - VAS 6122- .
- Place parts that have been removed on a clean surface and cover them over. Use only lint-free cloths.
- Carefully cover or seal open components if repairs cannot be carried out immediately.
- Only install clean components; replacement parts should only be unpacked immediately prior to installation. Do not use parts that have not been stored in their packing (e.g. in tool boxes etc.).
- When the system is open, do not work with compressed air and do not move the vehicle.
- Make sure that no fuel runs onto the fuel hoses. Should this occur, the fuel hoses must be cleaned again immediately.
- Protect unplugged electrical connectors against dirt and moisture and make sure connections are dry when attaching.

4.2 Foreign particles in engine

- When performing assembly work on the engine, all open passages in the intake and exhaust systems must be sealed with suitable plugs (e.g. from engine bung set - VAS 6122-) to prevent foreign particles from entering the engine.
- In the event of mechanical damage to one of the cylinder banks, the intake and exhaust systems and combustion chambers of the opposite cylinder bank must always be examined for foreign particles to prevent further damage occurring later.

Protected by copyright. Copying for private or commercial purposes, in part or in whole, is not permitted unless authorised by AUDI AG. AUDI AG does not guarantee or accept any liability with respect to the correctness of information in this document. Copyright by AUDI AG.

4.3 Contact corrosion

Contact corrosion can occur if unsuitable fasteners are used (e.g. bolts, nuts, washers, etc.).

For this reason, only fasteners with a special surface coating are used.

Additionally, all rubber and plastic parts and all adhesives are made of non-conductive materials.

Always install new parts if you are not sure whether used parts can be re-fitted ⇒ Electronic parts catalogue .

Note the following:

- We recommend using only genuine replacement parts; these have been tested and are compatible with aluminium.
- We recommend the use of Audi accessories.
- Damage caused by contact corrosion is not covered under warranty.

4.4 Routing and attachment of pipes, hoses and wiring

- Mark fuel lines, vacuum lines, pipes/hoses for activated charcoal filter system and electrical wiring etc. before removal so they can be re-installed in the original positions and correctly connected. Make sketches or take photographs if necessary.
- To prevent damaging pipes, hoses and wiring, ensure sufficient clearance from all moving or hot components in engine compartment (little space in engine compartment).

4.5 Installing radiators and condensers

Even when the radiator, condenser and charge air cooler are correctly installed, slight impressions may be visible on the fins of these components. This does not mean that the components are damaged. If the fins are only very slightly distorted, this does not justify renewal of the radiator, condenser or charge air cooler.

Protected by copyright. Copying for private or commercial purposes, in part or in whole, is not permitted unless authorised by AUDI AG. AUDI AG does not guarantee or accept any liability with respect to the correctness of information in this document. Copyright by AUDI AG.

10 – Removing and installing engine

1 Removing and installing engine

⇒ “1.1 Removing engine”, page 10

⇒ “1.2 Separating engine and gearbox”, page 31

⇒ “1.3 Securing engine to engine and gearbox support”, page 37

⇒ “1.4 Installing engine”, page 41

Protected by copyright. Copying for private or commercial purposes, in part or in whole, is not permitted unless authorised by AUDI AG. AUDI AG does not guarantee or accept any liability with respect to the correctness of information in this document. Copyright by AUDI AG.

1.1 Removing engine

Special tools and workshop equipment required

- Stepladder - VAS 5085-
- Engine bung set - VAS 6122-
- Scissor-type assembly platform - VAS 6131 A- with support set for Audi - VAS 6131/10- , support set -VAS 6131/11- and supplementary set -VAS 6131/13-
- Drip tray for workshop hoist - VAS 6208-
- Hose clip pliers - VAS 6340-
- Hose clip pliers - VAS 6362-

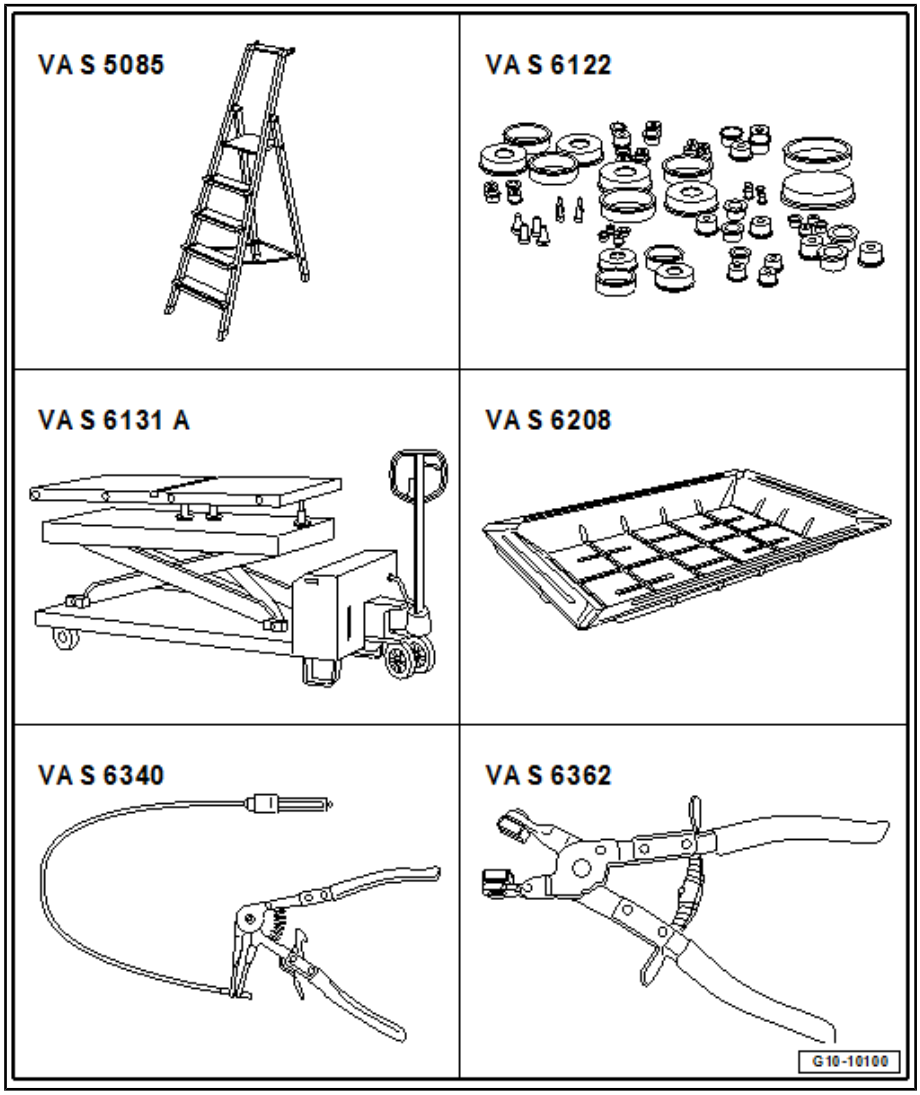

- Engine and gearbox jack - V.A.G 1383 A-

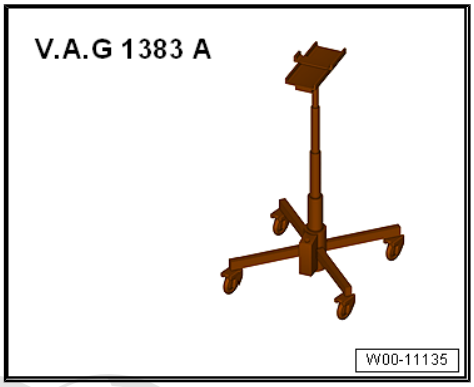

- Used oil collection and extraction unit - VAS 6622A-

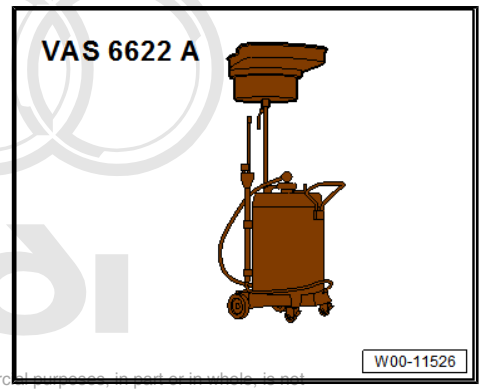

Protected by copyright. Copying for private or commercial purposes, in part or in whole, is not permitted unless authorised by AUDI AG. AUDI AG does not guarantee or accept any liability with respect to the correctness of information in this document. Copyright by AUDI AG.

- Counterhold tool - T10172- with pins -T10172/1-

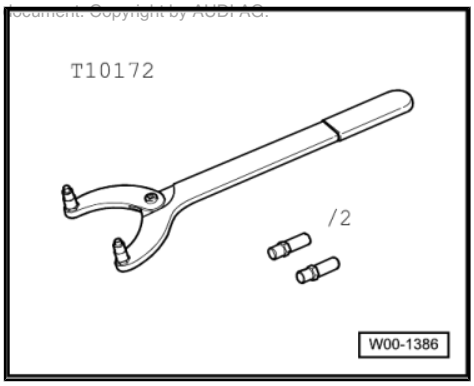

- Gearbox support - T10337-

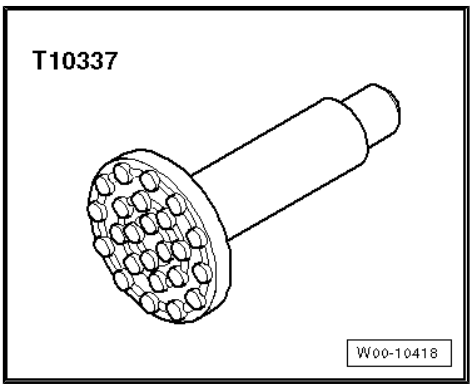

Preparing gearbox support - T10337- :

– Remove rubber overlay -1- from gearbox support - T10337- .

– If not already done, drill a hole in the centre ∅ = 10.2 mm -arrow-.

– Tap M12 thread into hole.

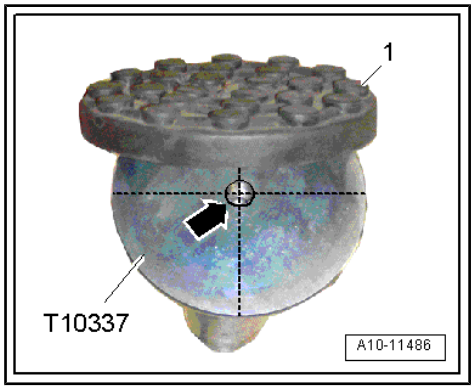

Procedure

Note

- *The engine is removed from underneath together with the gearbox and subframe (with lock carrier installed).*
- *Fit cable ties in the original positions when installing.*

WARNING

Make sure the vehicle cannot tip over when the engine is removed.

- ***Secure the vehicle, to do so, the luggage compartment must be empty.***

The fuel system operates at extremely high pressure. This can cause injury.

- ***The fuel pressure in the high-pressure section of the injection system must be reduced to a residual pressure prior to opening the system ⇒ page 241 .***
- ***Wrap a clean cloth around the connection and carefully loosen the connection to allow the residual pressure to dissipate.***

This is protected by copyright. Copying for private or commercial purposes, in part or in whole, is not permitted unless authorised by AUDI AG. AUDI AG does not guarantee or accept any liability with respect to the correctness of information in this document. Copyright by AUDI AG.

Note

Move the gearbox to position "N" and release the electromechanical parking brake before disconnecting the battery, so that the propshaft can be turned during removal.

– Set front wheels to straight-ahead position.

Caution

Electronic components are susceptible to damage.

- ***Observe notes on procedure for disconnecting the battery.***

– Switch off ignition and take out ignition key (if applicable).

– Disconnect earth wire -2- from battery terminal ⇒ Electrical system; Rep. gr. 27 ; Battery, Disconnecting and connecting battery .

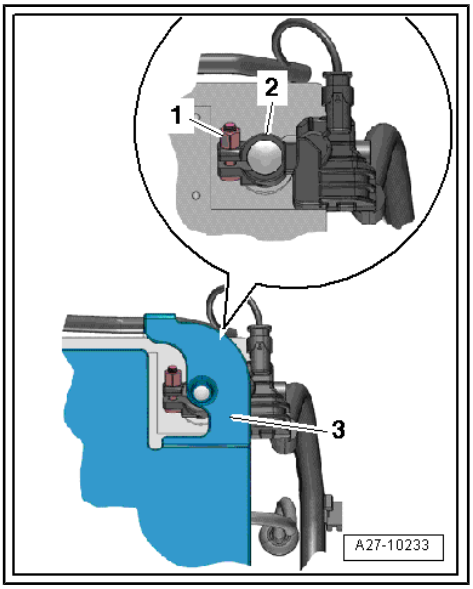

Vehicles up to model year 2013:

– Extract hydraulic fluid for power steering from reservoir using used oil collection and extraction unit - VAS 6622A- .

All vehicles (continued):

– Remove engine cover panel -arrows-.

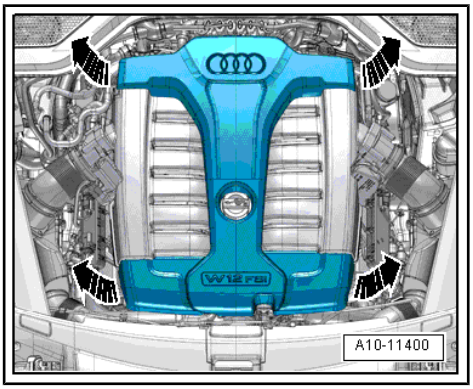

– Remove lock carrier cover -2- ⇒ General body repairs, exterior; Rep. gr. 63 ; Bumper (front); Removing and installing attachments .

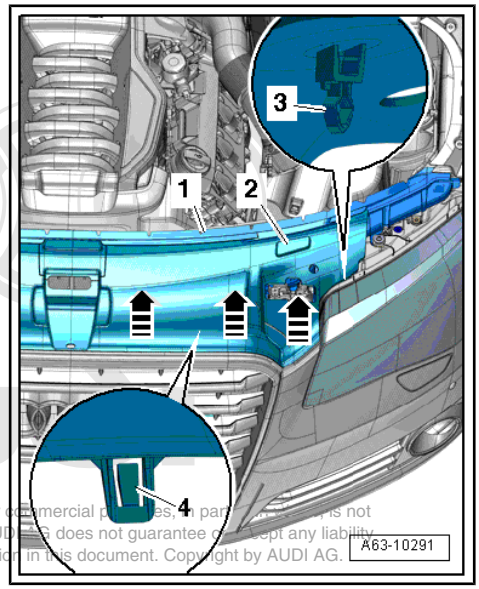

Protected by copyright. Copying for private or commercial purposes, in part or in whole is not permitted unless authorised by AUDI AG. AUDI AG does not guarantee or accept any liability with respect to the correctness of information in this document. Copyright by AUDI AG.

WARNING

Hot steam/hot coolant can escape - risk of scalding.

- *The cooling system is under pressure when the engine is hot.*
- *To allow pressure to dissipate, cover filler cap on coolant expansion tank with cloth and open carefully.*

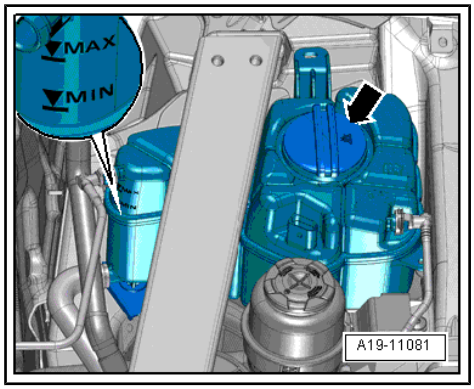

– Open filler cap -arrow- on coolant expansion tank.

– Completely remove wheel housing liners (front left and front right) ⇒ General body repairs, exterior; Rep. gr. 66 ; Wheel housing liner; Removing and installing wheel housing liner (front) .

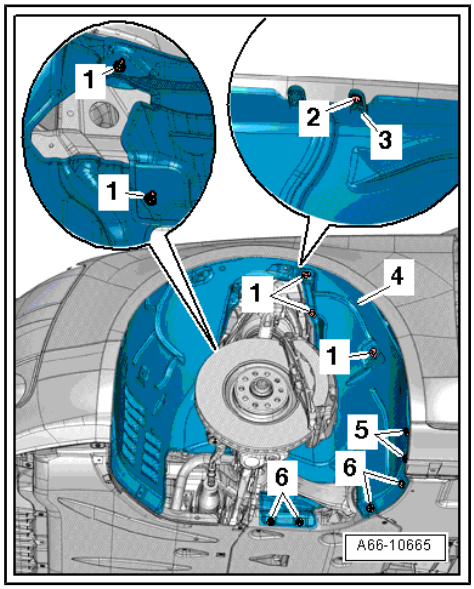

– Remove noise insulation panels -1- and -2- ⇒ General body repairs, exterior; Rep. gr. 66 ; Noise insulation; Removing and installing noise insulation .

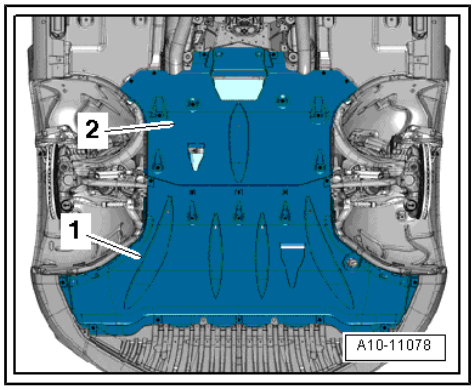

– Remove front underbody trim panels (left and right) -2- ⇒ General body repairs, exterior; Rep. gr. 66 ; Underbody trim; Removing and installing underbody trim .

Protected by copyright. Copying or distribution is not permitted without permission. Use only permitted when authorized by AUDI AG. AUDI AG does not guarantee or accept any liability with respect to the correctness of information in this document. Copyright by AUDI AG.

– Remove longitudinal members (bottom left and right) ⇒ General body repairs, exterior; Rep. gr. 50 ; Lock carrier; Removing and installing lock carrier .

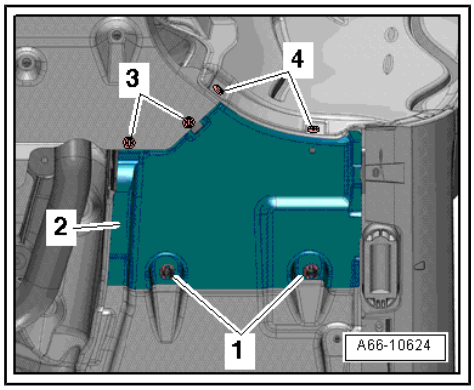

– Remove propshaft ⇒ Final drive; Rep. gr. 39 ; Propshaft; Removing and installing propshaft .

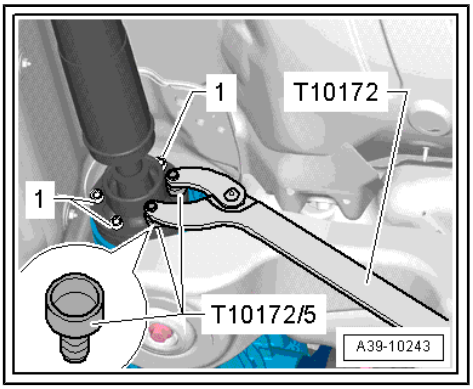

– Place drip tray for workshop hoist - VAS 6208- beneath engine.
– Release hose clip -arrow-, disconnect coolant hose from coolant pipe (bottom left) and drain off coolant.

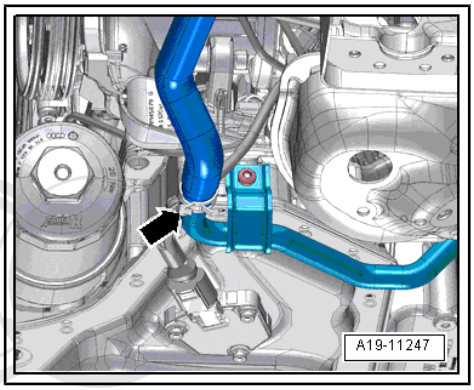

– Release hose clip -arrow-, disconnect coolant hose from engine oil cooler and drain off coolant.

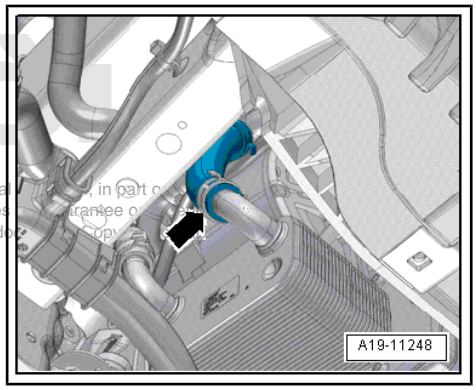

Protected by copyright. Copying for private or commercial purposes, in part or in whole, is not permitted unless authorised by AUDI AG. AUDI AG does not guarantee or assume any liability with respect to the correctness of information in this document. Copyright by AUDI AG.

– Remove bolt -arrow- and detach bracket -1-.

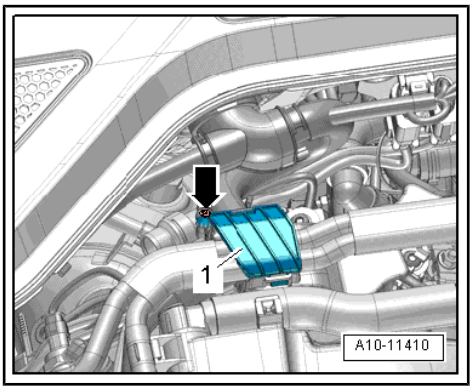

– Release hose clips -arrows- and detach hoses.

– Move clear vacuum pipe -1- and swivel to left side.

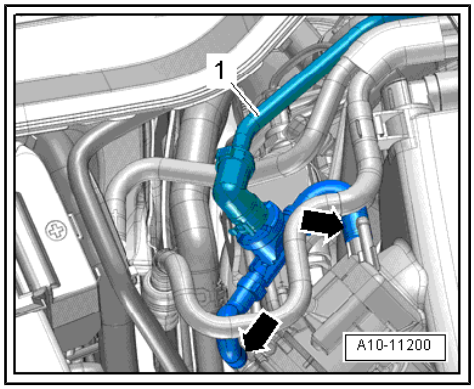

WARNING

Risk of injury caused by fuel.

- *To allow the fuel pressure to dissipate, wrap a clean cloth around the connection and carefully loosen the connection before opening the fuel system.*

Caution

Risk of damage caused by particles of dirt.

- *Observe rules for cleanliness when working on the fuel supply system* ⇒ page 8 .

Protected by copyright. Copying for private or commercial purposes, in part or in whole, is not permitted unless authorised by AUDI AG. AUDI AG does not guarantee or accept any liability with respect to the correctness of information in this document. Copyright by AUDI AG.

– Push down protective sleeve -1- and disconnect fuel line.

– First press hose connector -2- downwards -arrow A-, then press release tabs -arrow B-.

– Pull off hose connector, keeping release tabs depressed.

– Release hose clip -3- and detach hose for activated charcoal filter.

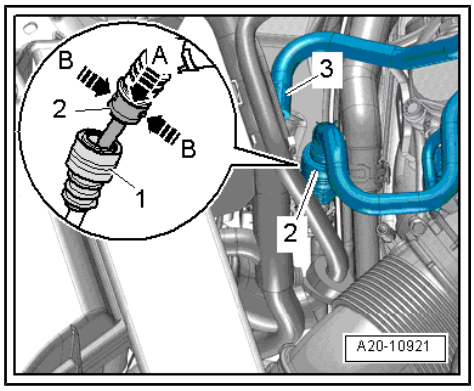

– Remove upper longitudinal member on both sides -2- ⇒ General body repairs, exterior; Rep. gr. 50 ; Lock carrier; Exploded view - lock carrier .

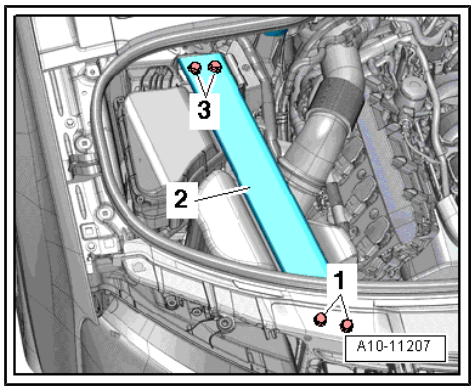

– Release hose clips -arrows- and remove air pipe.

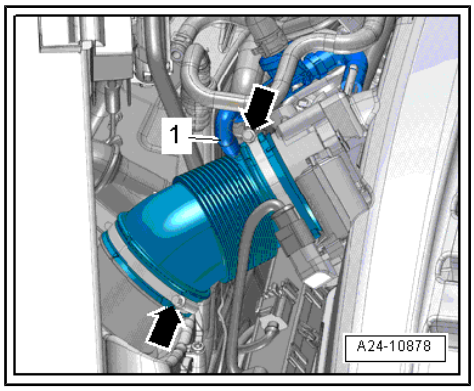

Note

Disregard -item 1-.

– Unplug electrical connector -3- from air mass meter - G70- .
– Detach air hose -4- and lift off air cleaner housing (right-side).
– If fitted, disconnect vacuum hose -2- and move clear -arrow-.
– If fitted, release fasteners and detach change-over valve -1- from air cleaner housing.

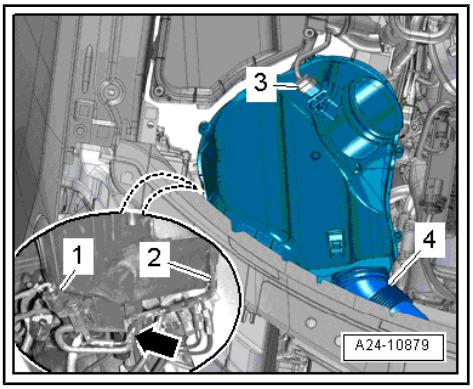

– Remove plenum chamber cover -2- ⇒ General body repairs, exterior; Rep. gr. 50 ; Bulkhead; Removing and installing plenum chamber cover .

Protected by copyright. Copying for private or commercial purposes, in part or in whole, is not permitted unless authorised by AUDI AG. AUDI AG does not guarantee or accept any liability with respect to the correctness of information in this document. Copyright by AUDI AG.

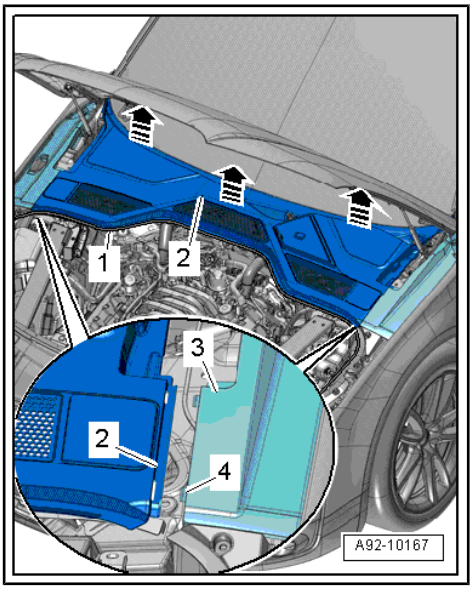

– Release cover -2- and swivel to side -arrow-.
– Remove nut -4- and move battery positive wire clear.
– Unscrew nut -3- and detach battery positive wire -1-.

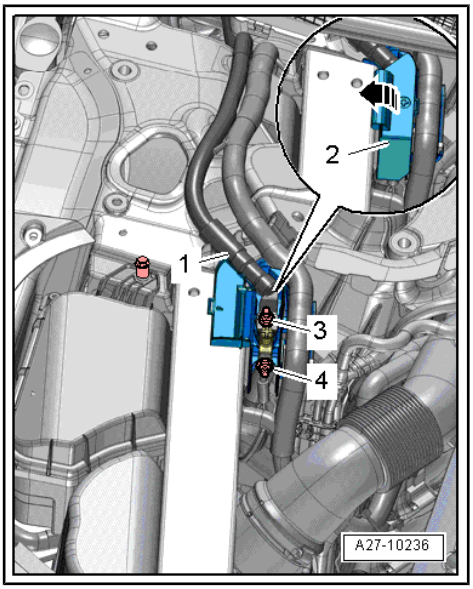

– Release retaining tabs -1, 3- and swivel positive terminal -2- out of mounting.

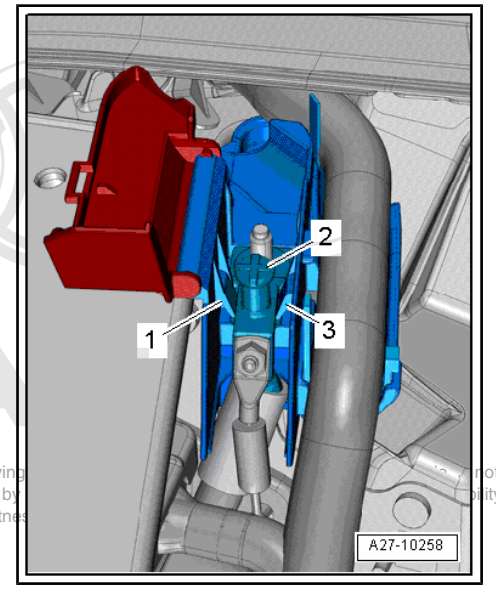

Protected by copyright. Copying permitted unless authorised by with respect to the correctness

– Remove bolts -arrows- and detach cover -1- for electronics box in engine compartment.

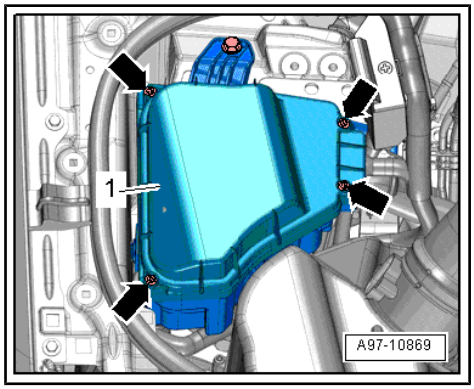

– Unplug electrical connectors -1, 2, 3- and move wiring clear.
– Release catches -arrows- and detach relay carrier with fuse holder -4-.
– Release fastener -5- and detach condenser -6-.
– Disengage engine wiring harness at electronics box in engine compartment, move clear and place onto engine.

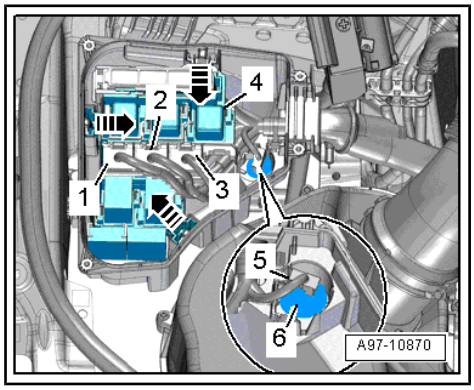

– Unplug electrical connector -arrow- at cylinder head (right-side) and move wiring clear.

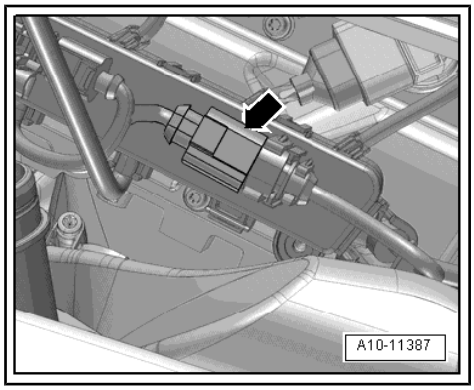

– Lift retaining clip -arrow- and disconnect coolant hose (rear right) from engine.

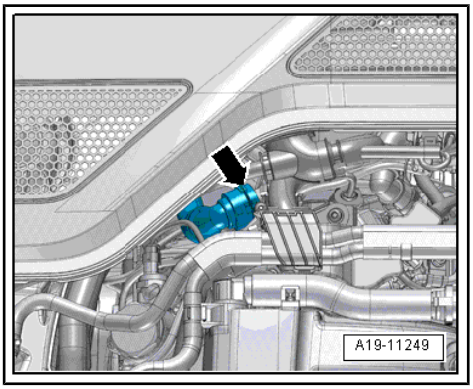

– Lift retaining clip -1- and disconnect coolant hose (top right) from radiator.

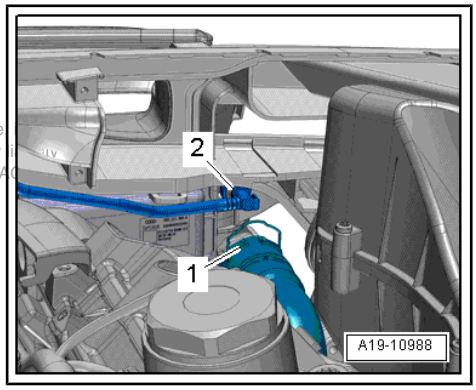

Note Protected by copyright. Copying for private or commercial purposes, in part or in whole, is not permitted unless authorised by AUDI AG. AUDI AG does not guarantee or accept any liability with respect to the correctness of information in this document. Copyright by AUDI AG.

Disregard -item 2-.

– Release hose clips -arrows- and detach coolant hoses from thermostat housing.

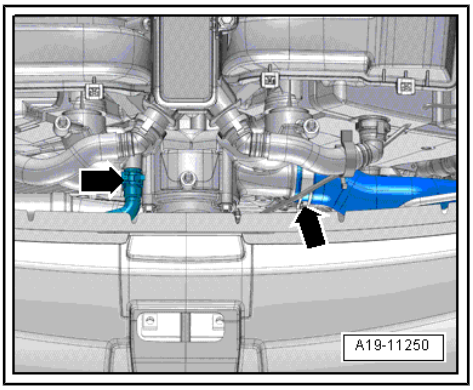

– Release hose clips -arrows- and remove air pipe (left-side).

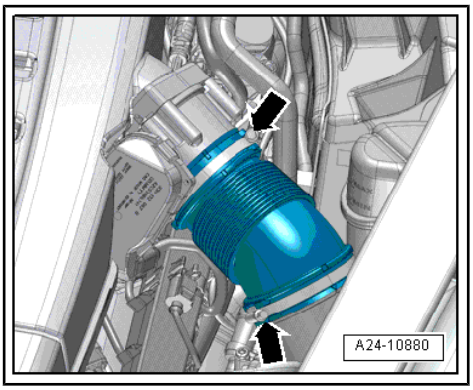

– If necessary, remove electrical connector -1- from bracket.

– Remove nuts -arrows- and detach bracket with electrical connectors from plenum chamber partition panel.

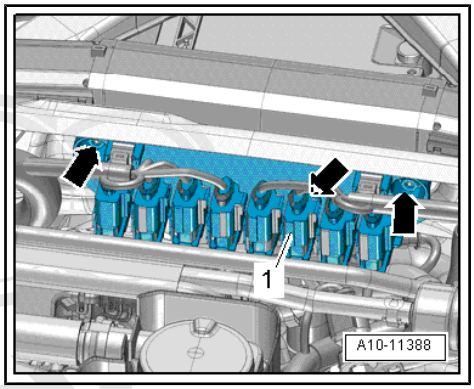

– Release catches -arrows-, detach engine control unit 2 - J624- -item 1- and move clear electrical wiring harness.

Protected by copyright. Copying for private or commerc
permitted unless authorised by AUDI AG. AUDI AG do
with respect to the correctness of information in this

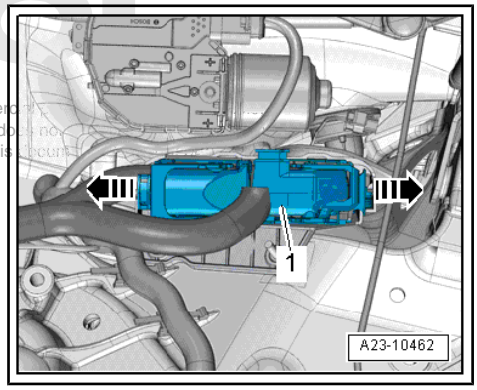

– Move clear wiring harness at plenum chamber cover on bulkhead on both sides (release catches -arrows-).

– Detach electrical connectors -1- from bracket and unplug.

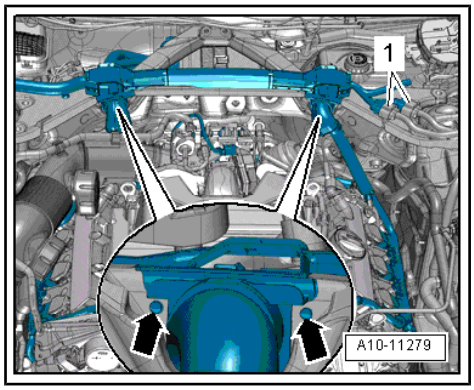

Vehicles from model year 2014 onwards:

– Move coolant hose -2- clear.

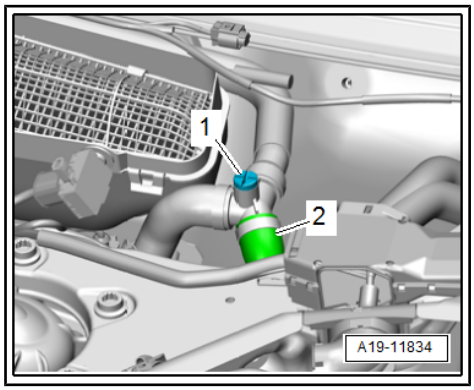

Note

Disregard -item 1-.

All vehicles (continued):

– Remove body brace ⇒ Running gear, axles, steering; Rep. gr. 40 ; Suspension strut, upper links; Removing and installing body brace .

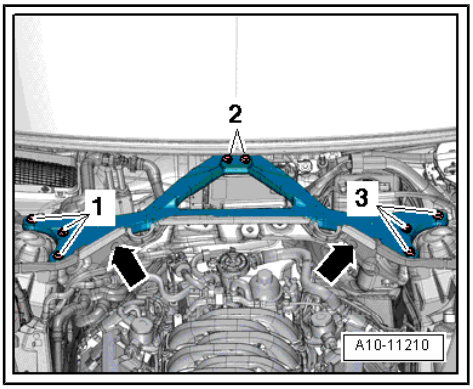

– Release clips -arrows-, take out engine control unit - J623- -item 2- and place onto engine.

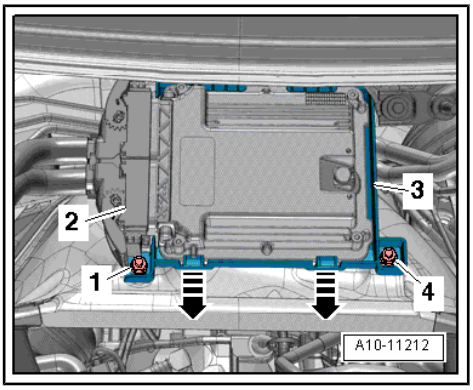

Note

Disregard -items 1, 3, 4-.

– Remove bolt -4- for battery positive wire -3- and bolt -2- for earth wire -1- and move electrical wiring clear.

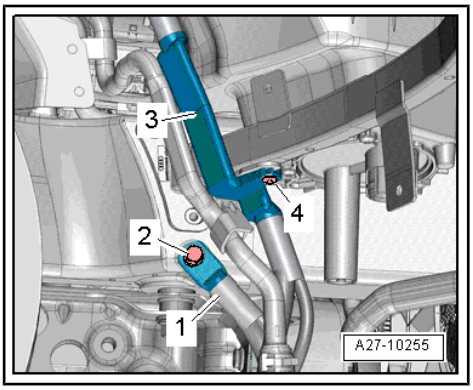

Vehicles with auxiliary heater:

– Remove bolt -arrow- at bracket.

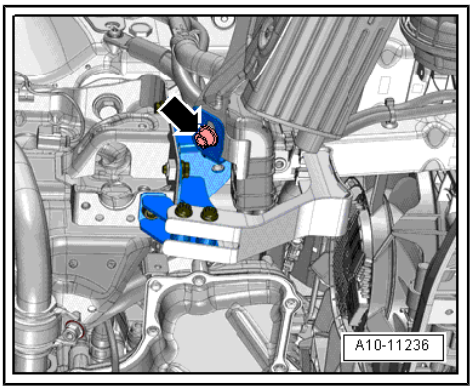

Protected by copyright. Copying for private or commercial purposes, in part or in whole, is not permitted unless authorised by AUDI AG. AUDI AG does not guarantee or accept any liability with respect to the correctness of information in this document. Copyright by AUDI AG.

All vehicles (continued):

– If fitted, unplug electrical connector -1- for right electrohydraulic engine mounting solenoid valve - N145- and move electrical wiring clear.

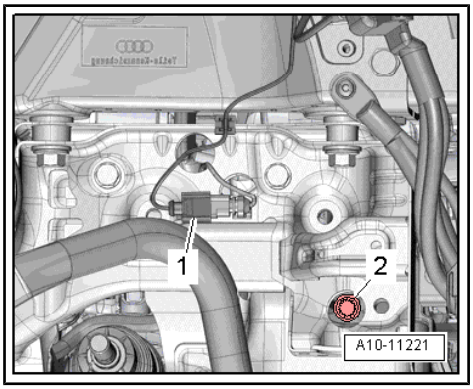

Note

Disregard -item 2-.

Vehicles without auxiliary heater:

– Release hose clip -arrow- and detach coolant hose from longitudinal member (right-side).

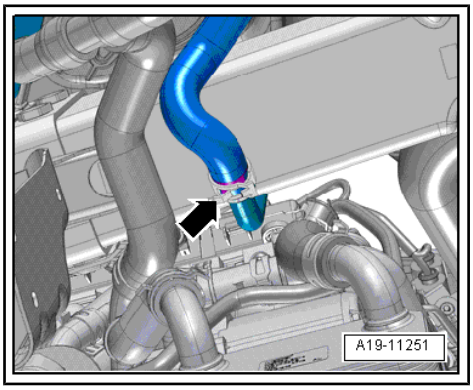

Vehicles with auxiliary heater:

– Release hose clips -arrows- and detach coolant hoses.

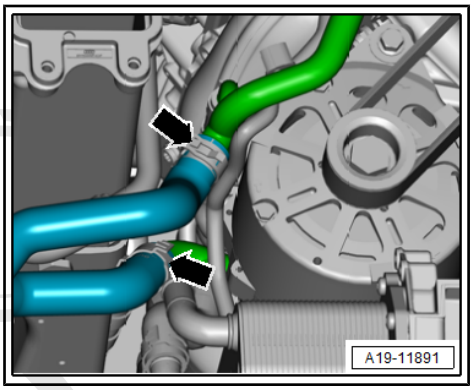

All vehicles (continued):

– To slacken poly V-belt turn tensioner in clockwise direction -arrow-.

– Remove poly V-belt from tensioner and release tensioner.

Protected by copyright. Copying for private or comme
permitted unless authorised by AUDI AG. AUDI AG
with respect to the correctness of information in th

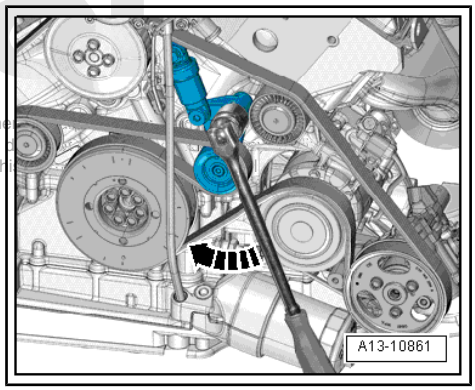

Note

Illustration shows vehicle version up to model year 2013.

Vehicles up to model year 2013:

– Position used oil collection and extraction unit - VAS 6622A- below connection point.

– Release hose clip -arrow- and detach hydraulic hose.

– Seal off open lines and connections with clean plugs from engine bung set - VAS 6122- .

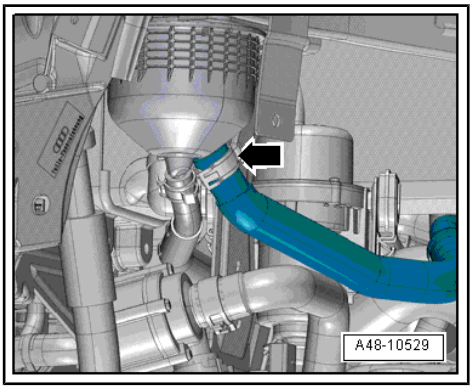

– Loosen bolts -arrows- for poly V-belt pulley for power steering pump (counterhold with counterhold tool - T10172- and pins - T10172/1-).

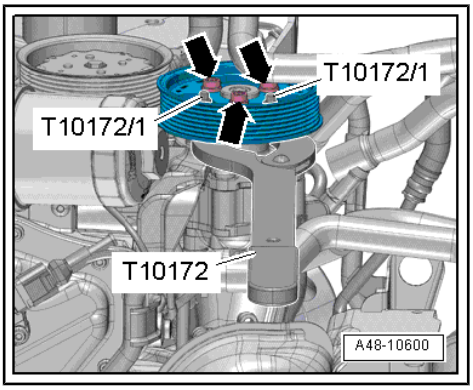

– Vehicles without dynamic steering: Remove bolts -1 and 2-, disconnect hydraulic line and move to one side.

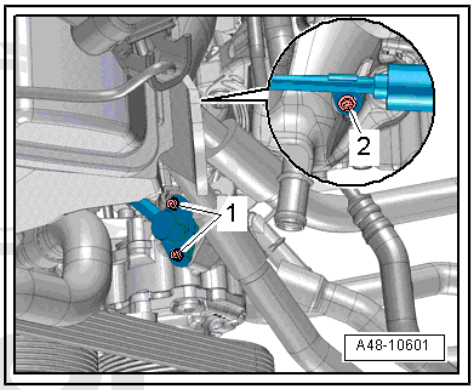

– Vehicles with dynamic steering: Unplug electrical connector -2-.

– Unfasten union -1-, remove bolt -3-, disconnect hydraulic line and move to one side.

– Seal off open lines and connections with clean plugs from engine bung set - VAS 6122- .

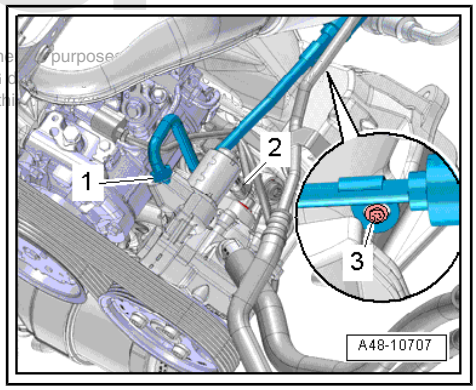

Protected by copyright. Copying for private or commercial purposes, in part or in whole, is not permitted unless authorised by AUDI AG. AUDI AG does not guarantee or assume any liability with respect to the correctness of information in this document.

– Remove bolts -arrows- and detach power steering pump -1-.

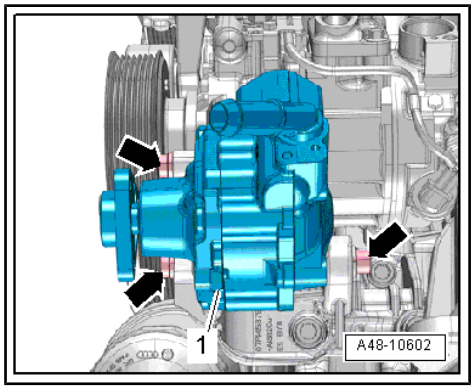

– Move clear electrical wiring harness -2-.
– Remove bolts -arrows-.

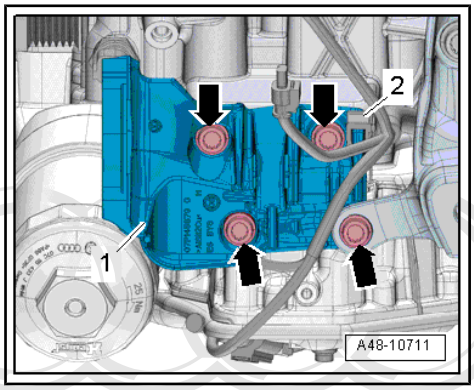

Note

- *Engine must be lifted slightly in order to remove bolt -bottom right arrow-.*
- *Disregard -item 1-.*

– Secure tapered mounting pin - VAS 6131/10-2- to gearbox support - T10337- .
– Attach the engine and gearbox jack - V.A.G 1383 A- to the engine as shown in the illustration and lift it as far as necessary to be able to remove the bolt.
– Detach bracket for power steering pump.

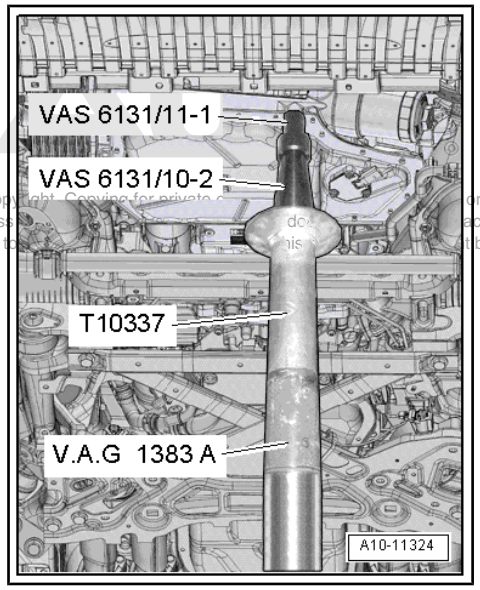

Protected by copyright. Copying for private or in whole, is not permitted unless authorised. We do accept any liability with respect to the accuracy of this data by AUDI AG.

Note

If it is not possible to remove the bracket for the power steering pump, push bush -1- to the left side with a screwdriver -arrow-.

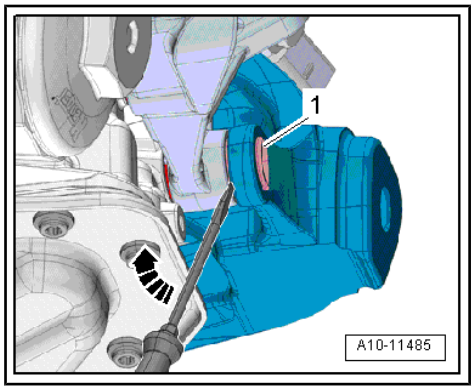

Note

Lay a cloth underneath vehicle to catch escaping hydraulic fluid.

– Release hose clip -arrow- and detach hydraulic hose.

– Seal off open lines and connections with clean plugs from engine bung set - VAS 6122- .

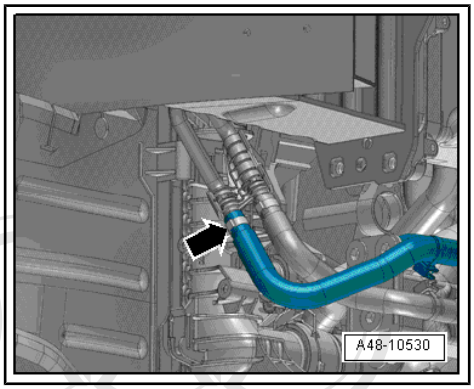

All vehicles (continued):

– Unplug electrical connector -arrow- at front vehicle level sender -G78- / -G289- and move electrical wiring clear.

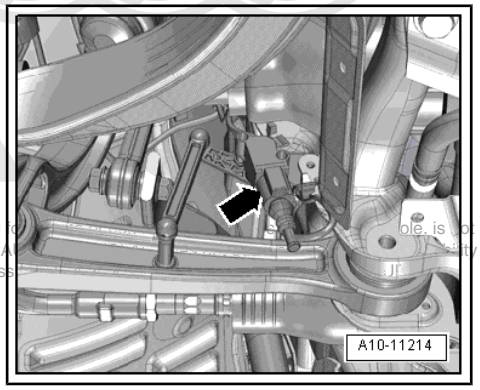

Protected by copyright. Copying
permitted unless authorised by A
with respect to the correctness

– Unplug electrical connectors -arrow- at front speed sensors -G45- / -G47- on both sides.

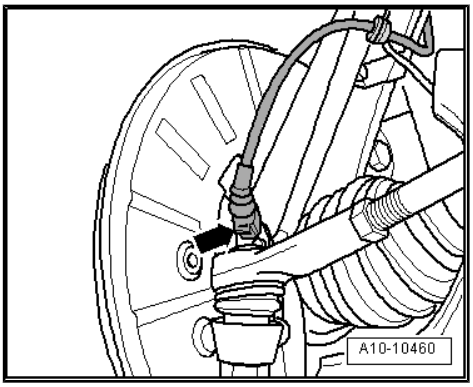

– Remove brake caliper and tie up in wheel housing with wire (brake hose remains attached) ⇒ Brake system; Rep. gr. 46 ; Front brakes; Removing and installing brake caliper .

Caution

Avoid damage to brake pistons.

- *Do not operate brake pedal with brake caliper removed.*

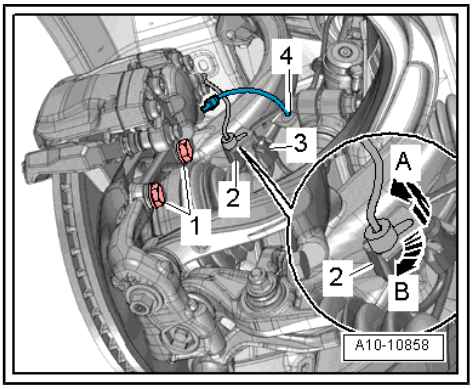

– Remove nut -2- and pull out bolt -1-.
– Pull upper suspension links upwards out of wheel bearing housing -arrows-.
– Perform the same work steps on the other side of the vehicle.

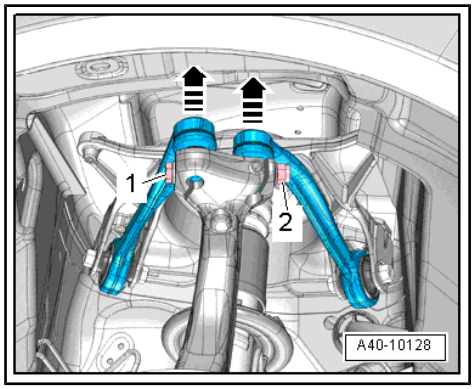

– Remove bolt -1- for anti-roll bar on both sides.
– Remove nut -3- on both sides.

Note

The bolt -2- is removed at a later stage.

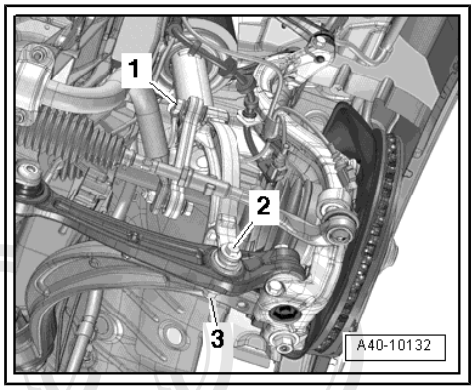

– Remove bolts (left and right) -3- securing gearbox mounting strut.

Note

Disregard -items 1, 2-.

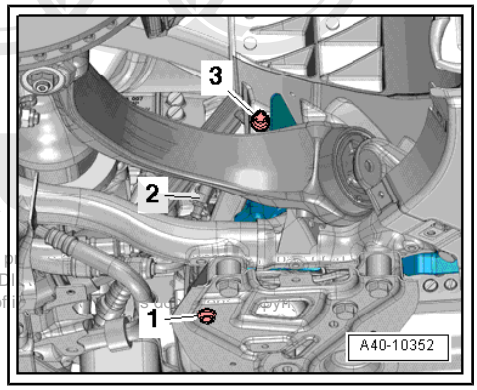

Protected by copyright. Copying for p
permitted unless authorised by AUD
with respect to the correctness of

If engine is to be separated from gearbox:

– Version 2 electrical connectors only: Unplug electrical connectors and move electrical wiring clear.

1 - Gearbox mounting valve 1 - N262-

2 - Gearbox mounting valve 2 - N263-

– Remove subframe cross brace ⇒ Running gear, axles, steering; Rep. gr. 40 ; Subframe; Removing and installing subframe cross brace .

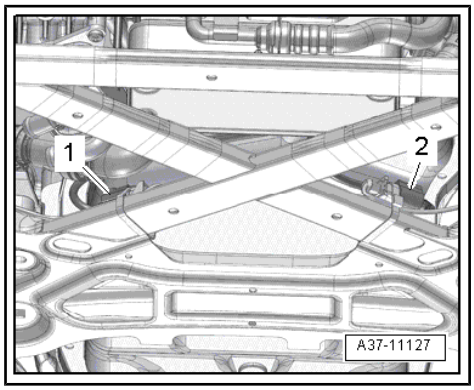

Caution

Risk of damage to running gear components.

- ***The vehicle must NOT be lowered onto its wheels if the engine/gearbox mountings, steering rack or subframe cross brace are not properly installed.***

Note

Place a cloth underneath to catch escaping coolant.

– Release hose clip -3- and detach coolant hose.
– Move clear electrical wiring harness at ATF cooler.
– Remove bolts -arrows- and tie up ATF cooler -1- to side with pipe/hose assembly -2- attached.

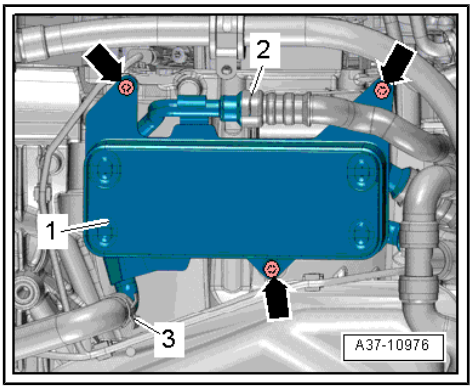

– Unplug electrical connector -2- for engine speed sender - G28- .
– Move clear electrical wiring harness at gearbox.

Note

Disregard -item 1-.

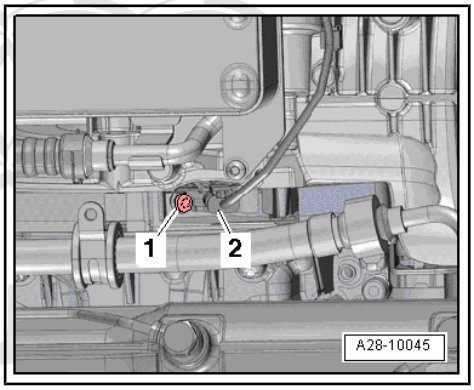

Protected by copyright. Copying for private or commercial purposes, in part or in whole, is not permitted unless authorised by AUDI AG. AUDI AG does not [illegible] liability with respect to the correctness of information in this docu[illegible] by AUDI [illegible]

– Detach bottom cover -1- from gearbox -arrow-.

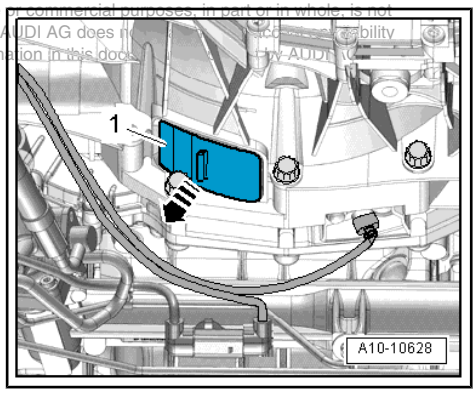

– Counterhold crankshaft with counterhold tool - T10172- and pins -T10172/1- and loosen torque converter bolts.

Note

When performing the next step, turn the crankshaft only in the normal direction of rotation -arrow-.

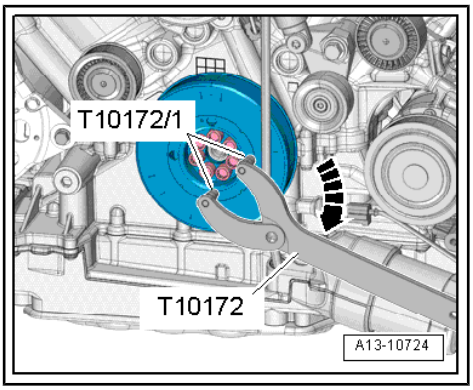

– Remove 6 bolts -arrow- for torque converter, turning crankshaft 60° in normal direction of rotation each time.

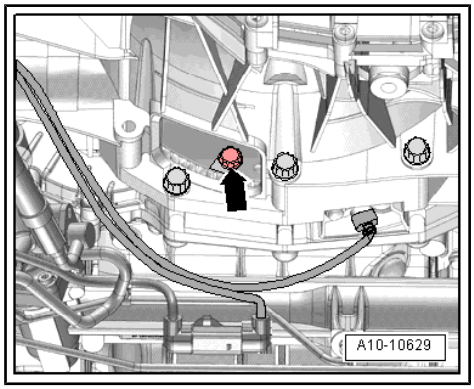

If engine is NOT to be separated from gearbox:

– Remove bolts -1 and 6-.

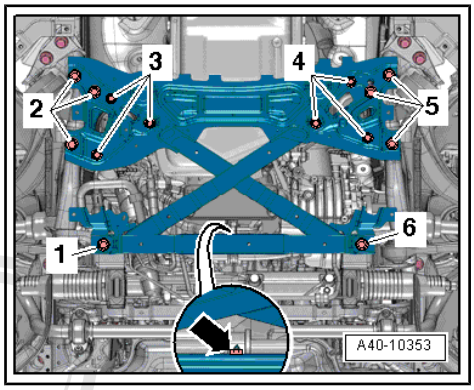

Removing engine (continued):

– Detach intermediate steering shaft from steering rack and move clear by telescoping upwards ⇒ Running gear, axles, steering; Rep. gr. 48 ; Steering column; Removing and installing intermediate steering shaft .

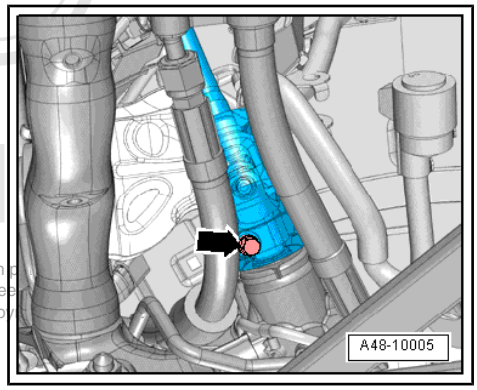

Note

Illustration shows vehicle version up to model year 2013.

Protected by copyright. Copying for private or commercial purposes, in
does not guarantee
with respect to the correctness of information in this document. Cop

– Release catches -arrows A- and push sleeve -1- at manual release cable in direction of -arrow B-.

– Disengage rear manual release cable from front manual release cable -arrow C-.

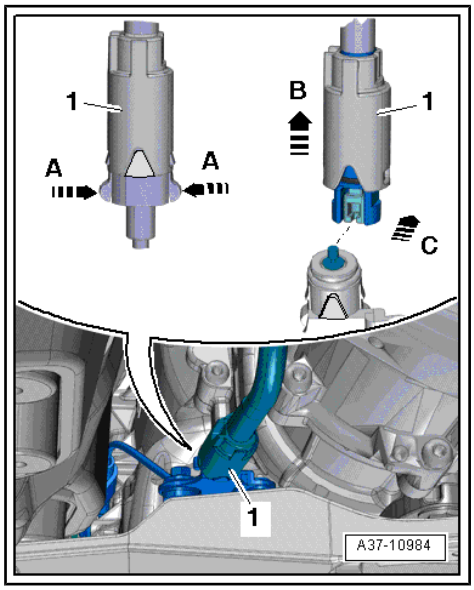

– If fitted, remove electrical connector -1- from bracket and unplug it.

– Detach electrical connector -2- for steering rack from bracket and unplug.

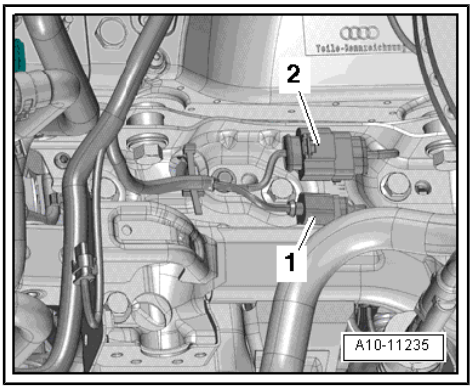

Set up the scissor-type assembly platform as follows:

– Set up scissor-type assembly platform - VAS 6131 A- with support set for Audi - VAS 6131/10- , support set -VAS 6131/11- and supplementary set -VAS 6131/13- as follows:

Platform coordinates	Parts of support set for Audi - VAS 6131/10- , support set -VAS 6131/11- and supplementary set - VAS 6131/13-			
B4	/13-4	/10-4	/10-5	/10-10
G4	/13-4	/10-4	/10-5	/10-13
B6	/10-1	/10-2	/10-5	/10-11
G6	/10-1	/10-2	/10-5	/10-11
A8+C8	/13-6			/13-2
F8+H8	/13-5			/13-2
D14	/10-1	/10-3	/10-5	/11-1
G14	/10-1	/10-4	/10-5	/11-1

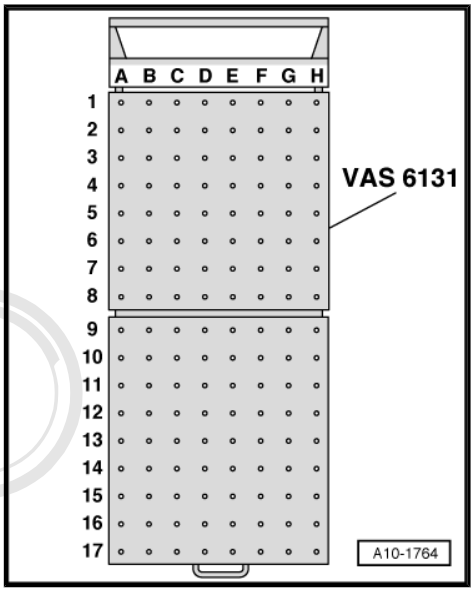

– Initially hand-tighten the support elements on the scissor-type assembly platform.

– Position scissor-type assembly platform - VAS 6131 A- horizontally.

• Take note of spirit level (bubble gauge).

Protected by copyright. Copying for private or commercial purposes, in part or in whole, is not permitted unless authorised by AUDI AG. AUDI AG does not guarantee or accept any liability with respect to the correctness of information in this document. Copyright by AUDI AG.

– Position scissor-type assembly platform - VAS 6131 A- below engine/gearbox assembly.

– Position the support elements from -VAS 6131/10- and -VAS 6131/13- at left of subframe as shown.

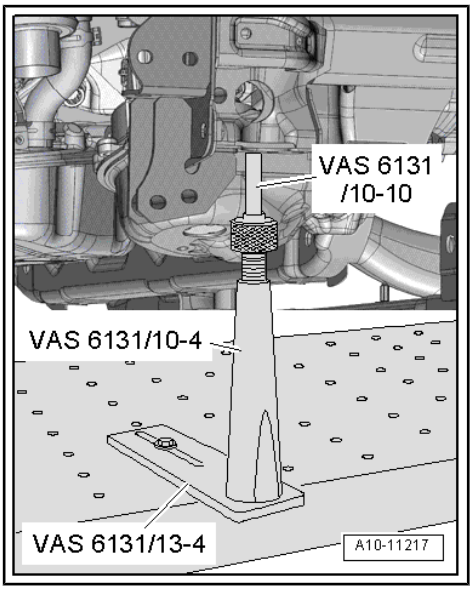

– Position support elements from -VAS 6131/10- and -VAS 6131/13- at right of subframe as shown.

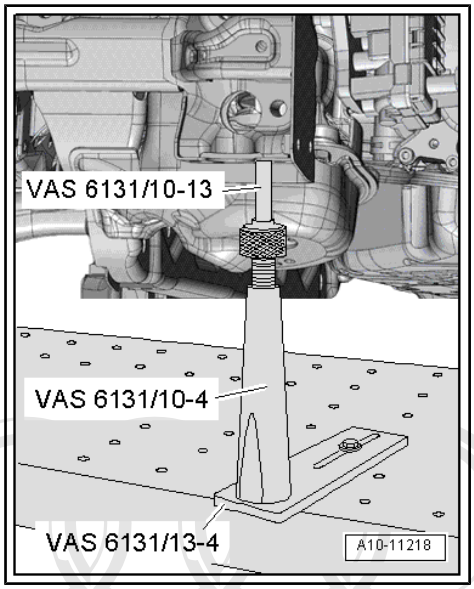

– Position support elements from -VAS 6131/10- (rear left and right) at front attachment points of subframe cross brace as shown.

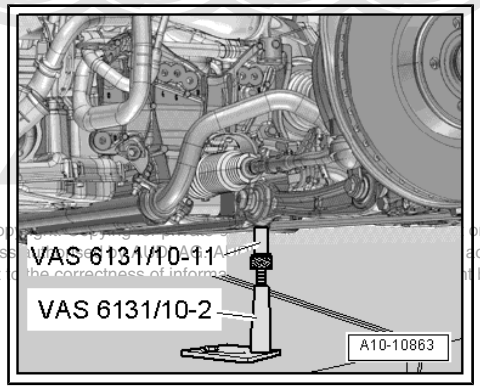

Protected by copyright. Copying for private or commercial purposes, in part or in whole, is not permitted unless authorised by AUDI AG. AUDI AG does not guarantee or accept any liability with respect to the correctness of information in this document. Copyright by AUDI AG.

– Position support elements from -VAS 6131/13- under left and right wheel bearing housings as shown.

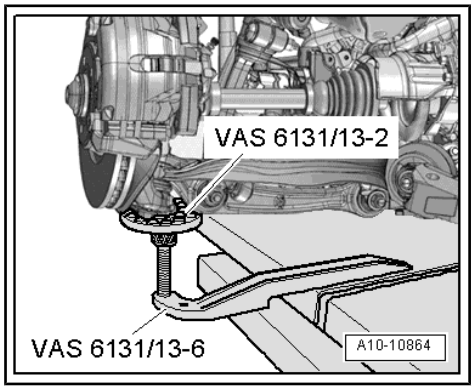

– Position support elements from -VAS 6131/10- and -VAS 6131/11- (rear left and right) at tunnel cross member as shown.
– Turn all spindles for support elements upwards until all locating lugs make contact with mounting points.
– Tighten base plates for support elements to 20 Nm on scissor-type assembly platform - VAS 6131 A- .

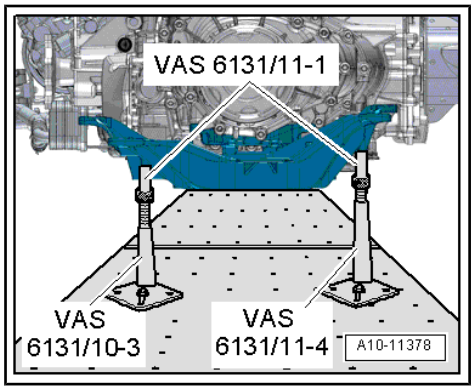

– Mark installation position of subframe and tunnel cross member on longitudinal members with felt-tip pen.

– Unscrew subframe bolts -1, 2, 3- on both sides in several stages.

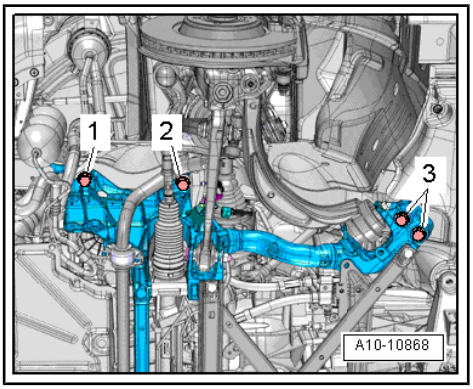

– Remove bolts -arrows- for tunnel cross member.

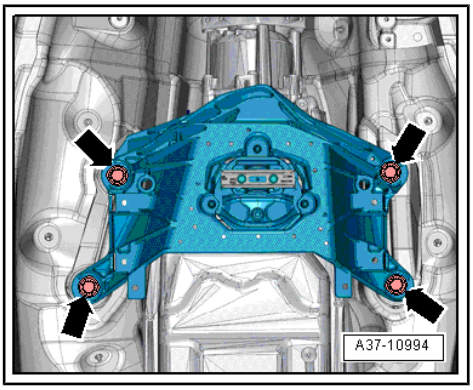

> **Caution**
>
> *Danger of damage to hoses, pipes and wiring connections and to engine compartment.*
>
> - *Check that all hoses and wiring connections between engine, gearbox, subframe and body have been detached.*
> - *Carefully guide out engine/gearbox assembly with subframe from engine compartment when lowering.*

– Lower engine/gearbox assembly using scissor-type assembly platform - VAS 6131 A- initially only as far as distance -a-.

• Dimension -a- = 100 mm (maximum).

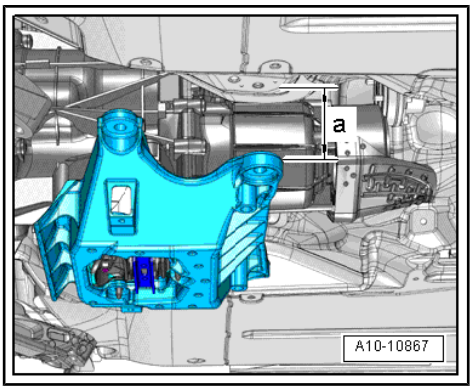

> **WARNING**
>
> *Risk of injury caused by refrigerant.*
>
> - *The air conditioner refrigerant circuit must not be opened.*

– Detach electrical connector -1- from bracket and unplug.

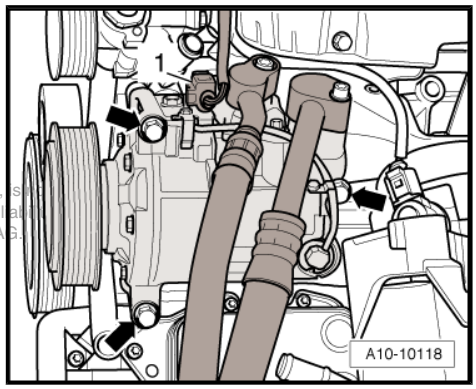

> **Caution**
>
> *Danger of damage to refrigerant lines and hoses.*
>
> - *Do NOT stretch, kink or bend refrigerant lines and hoses.*

Copyright by AUDI AG.
This document is copyright. Copying for private or commercial purposes, in part or in whole, is not permitted unless authorised by AUDI AG. AUDI AG does not guarantee or accept any liability with respect to the correctness of information in this document. Copyright by AUDI AG.

– Remove bolts -arrows-, detach air conditioner compressor from bracket and tie up to left side.

– Lower engine/gearbox assembly further.

– Pull out scissor-type assembly platform - VAS 6131 A- with engine/gearbox assembly from underneath vehicle.

1.2 Separating engine and gearbox

Special tools and workshop equipment required

♦ Counterhold tool - T10172- with pins -T10172/1-

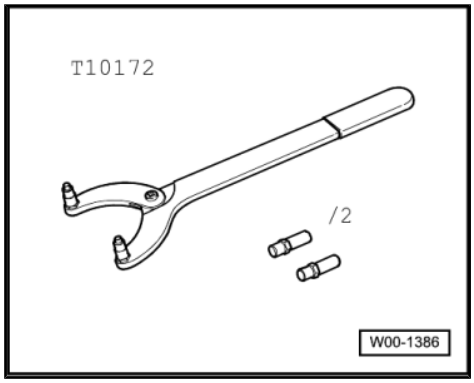

♦ Support set for Audi - VAS 6131/10- , supplementary set -VAS 6131/12- and support -VAS 6131/13-7-

♦ Bolt M10x65

Procedure

• Engine/gearbox assembly removed and secured to scissor-type assembly platform - VAS 6131- .

– Detach electrical connectors from bracket, unplug and move electrical wires clear:

Protected by copyright. Copying for private or commercial purposes, in part or in whole, is not permitted unless authorised by AUDI AG. AUDI AG does not guarantee or accept any liability with respect to the correctness of information in this document. Copyright by AUDI AG.

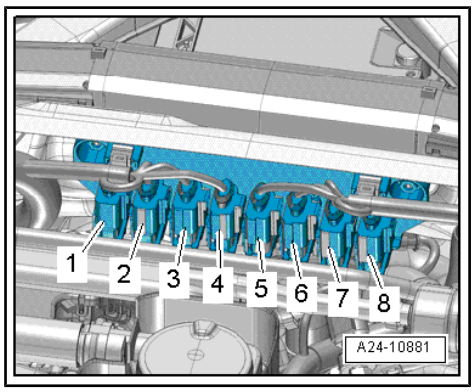

1 - For Lambda probe - G39-

2 - For Lambda probe 2 - G108-

3 - For Lambda probe after catalytic converter - G130-

4 - For Lambda probe 2 - G131- (after catalytic converter)

5 - For Lambda probe 3 - G287- (after catalytic converter)

6 - For Lambda probe 4 - G288- (after catalytic converter)

7 - For Lambda probe 3 - G285-

8 - For Lambda probe 4 - G286-

– Unscrew nuts -1, 2, 3- (front and rear) and detach exhaust manifold (left-side) with catalytic converters.

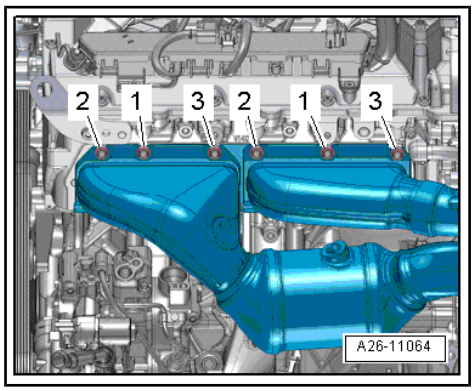

– Remove bolts -arrows- from gearbox mounting (left-side) and detach heat shield -1-.

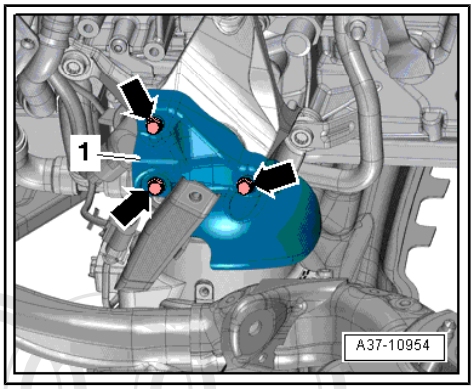

Vehicles up to model year 2013:

– Remove bolt -arrow- securing power steering hydraulic line to gearbox support (left-side).

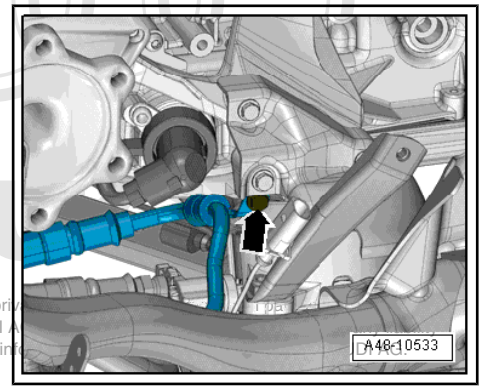

Protected by copyright. Copying for priv
permitted unless authorised by AUDI A
with respect to the correctness of in

All vehicles (continued):

– Remove bolt -arrow- and detach gearbox mounting (left-side) from gearbox support.

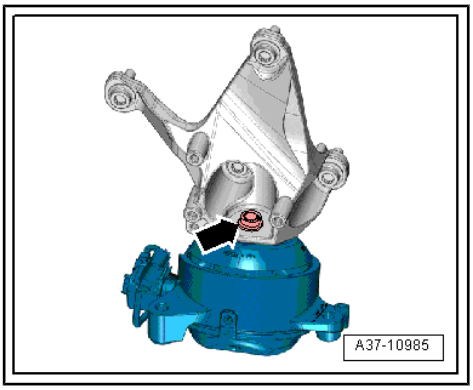

Caution

Risk of irreparable damage to gearbox control unit (mechatronic unit) because of static discharge.

- *Do NOT touch connector contacts in gearbox connector with your hands.*

– Touch gearbox housing with your hand (without wearing gloves) to eliminate static charge.

– Turn retainer catch anti-clockwise -arrow- and unplug electrical connector at gearbox.

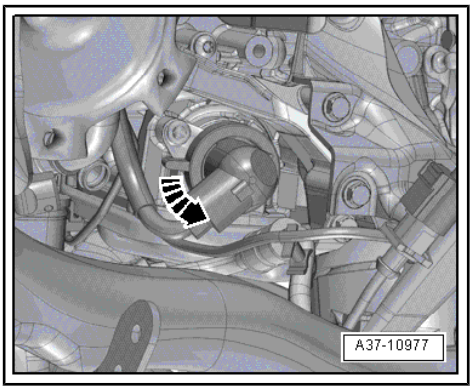

– Release hose clip -arrow- and detach coolant hose from coolant pipe (bottom left).

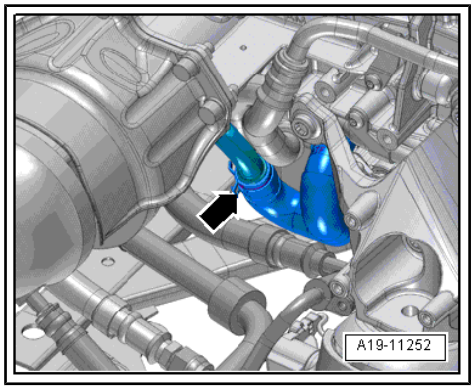

– Unscrew nuts -1, 2, 3- (front and rear) and detach exhaust manifold (right-side) with catalytic converters.

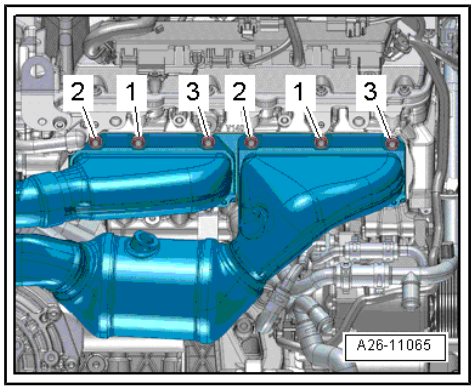

– Remove bolts -arrows- from gearbox mounting (right-side) and detach heat shield -1-.

– Remove bolt -2- and detach gearbox mounting (right-side) from gearbox support.

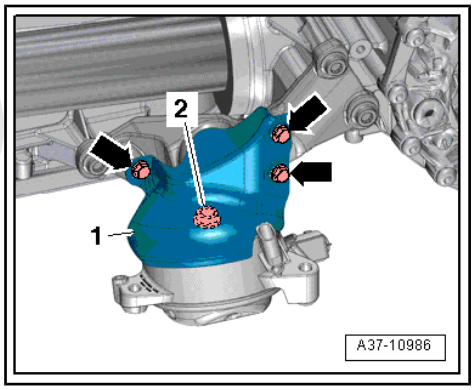

– Detach electrical connectors -1 and 2- from bracket and unplug.

– Press release tabs and disconnect secondary air hoses -arrows-.

– Move secondary air hoses to one side together with electrical wiring harness.

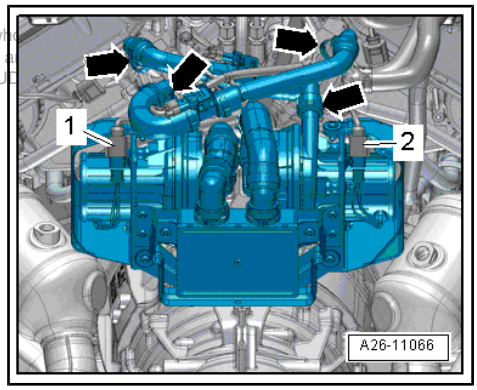

Protected by copyright. Copying for private or commercial purposes, in part or in whole, is not permitted unless authorised by AUDI AG. AUDI AG does not guarantee or accept any liability with respect to the correctness of information in this document. Copyright by AUDI AG.

– Remove bolt -1- for coolant pipe on gearbox (rear right).
– Remove bolts (left and right) -arrows- and detach brackets for secondary air pumps -V101- / -V189- .

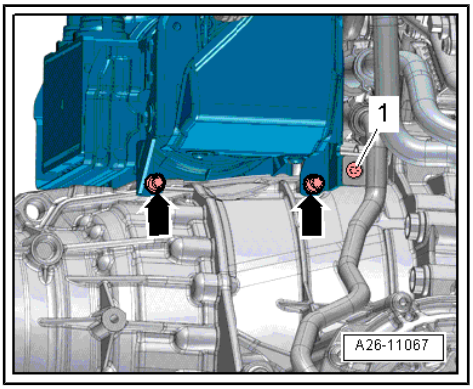

Note

Place a cloth underneath to catch escaping coolant.

– Release hose clip -top arrow-, remove bolt -1- and detach coolant hose.
– Detach coolant pipe (right-side) from gearbox.

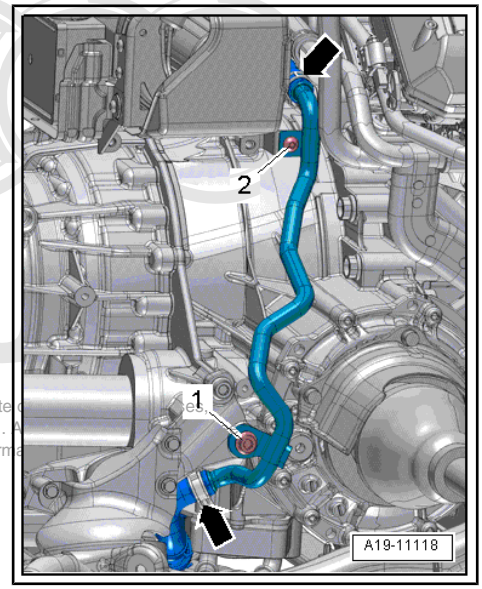

Note

Disregard -bottom arrow-.

Protected by copyright. Copying for private
permitted unless authorised by AUDI AG.
with respect to the correctness of inform

– Unbolt drive shaft (left and right) from gearbox flange shafts ⇒ Running gear, axles, steering; Rep. gr. 40 ; Drive shaft; Removing and installing drive shaft .

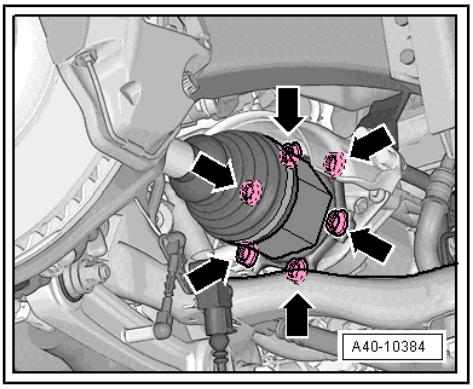

– Detach cover -arrow- and remove idler roller for poly-V-belt.

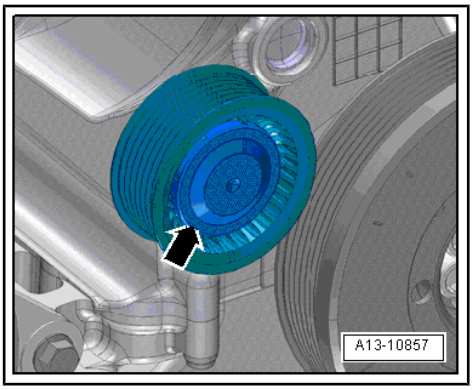

– Set up scissor-type assembly platform - VAS 6131 A- with support set for Audi - VAS 6131/10- , supplementary set -VAS 6131/12- and support -VAS 6131/13-7- as follows:

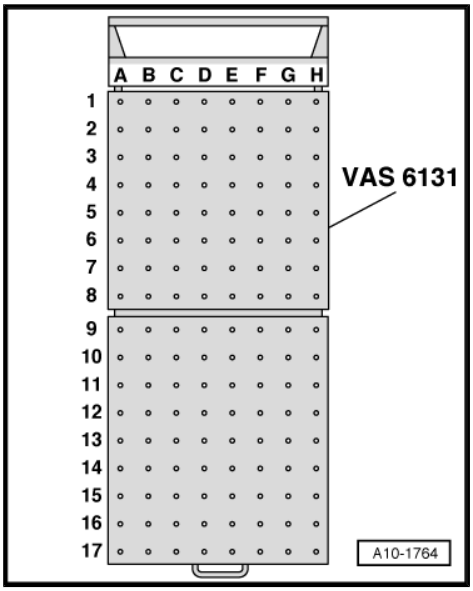

Note

The other support elements remain unchanged.

Platform coordinates	Parts from support set for Audi - VAS 6131/10- , support set -VAS 6131/12- and support - VAS 6131/13-7-			
E1	/13-7			
B10	/10-1	/10-3	/10-5	/12-1
H10	/10-1	/10-3	/10-5	/12-1

– Secure support -VAS 6131/13-7- in threaded hole at front of engine (right-side) with bolt (M10x65) -arrow- as shown.

– Secure support -VAS 6131/13-7- to scissor-type assembly platform and tighten to 20 Nm.

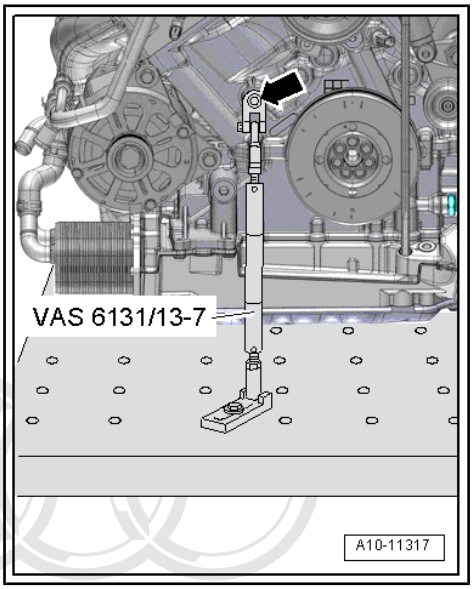

– Position the support elements from -VAS 6131/10- and -VAS 6131/12- at left of gearbox, as shown in the illustration.

Protected by copyright. Copying for private
permitted unless authorised by AUDI AG.
with respect to the correctness of inform

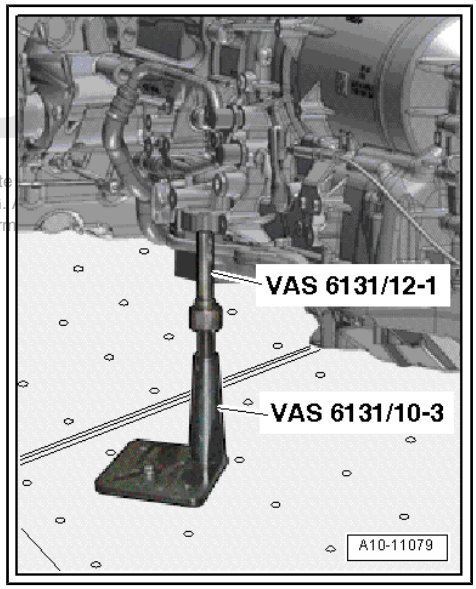

– Position the support elements from -VAS 6131/10- and -VAS 6131/12- at gearbox support (right-side), as shown in illustration.
– Turn spindles (left and right) upwards until all locating lugs make contact with mounting points.
– Tighten base plates for support elements to 20 Nm on scissor-type assembly platform - VAS 6131 A- .

Protected by copyright. Copying for private or commercial purposes, in part or in whole, is not permitted unless authorised by AUDI AG. AUDI AG does not guarantee or accept any liability with respect to the correctness of information in this document. Copyright by AUDI AG.

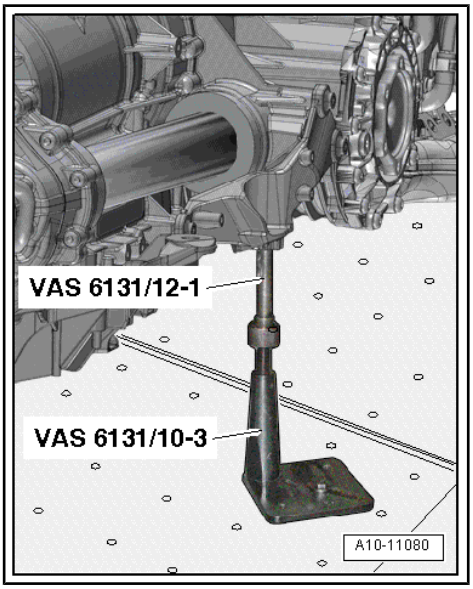

– Remove bolts -1- and -2- for starter.
– Separate starter from gearbox and leave in position.
– Unscrew remaining bolts -3 ... 14- securing engine to gearbox.

Note

Disregard -item A-.

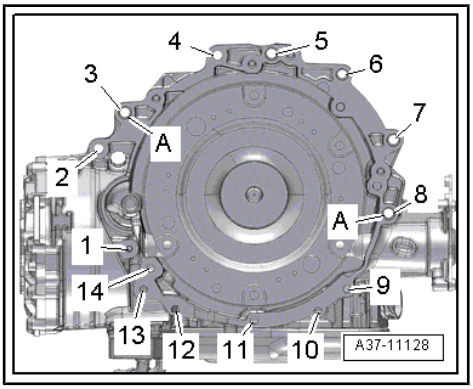

– Loosen clamping bolts -1- on sides of scissor-type assembly platform - VAS 6131 A- and pull rear section of platform together with gearbox towards rear -arrow-.

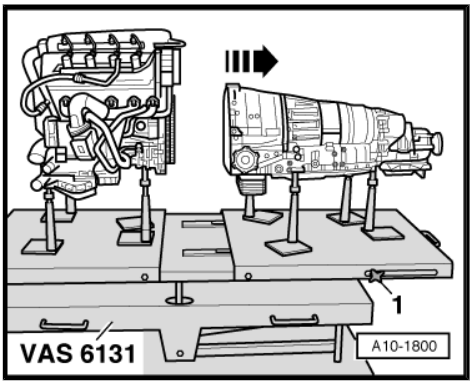

1.3 Securing engine to engine and gearbox support

Special tools and workshop equipment required

- Lifting tackle - 3033-
- Engine and gearbox support - VAS 6095- with bracket for W12 FSI engine -VAS 6095/1-12-
- Workshop hoist - VAS 6100-
- Lift arm extension (workshop hoist) - VAS 6101-

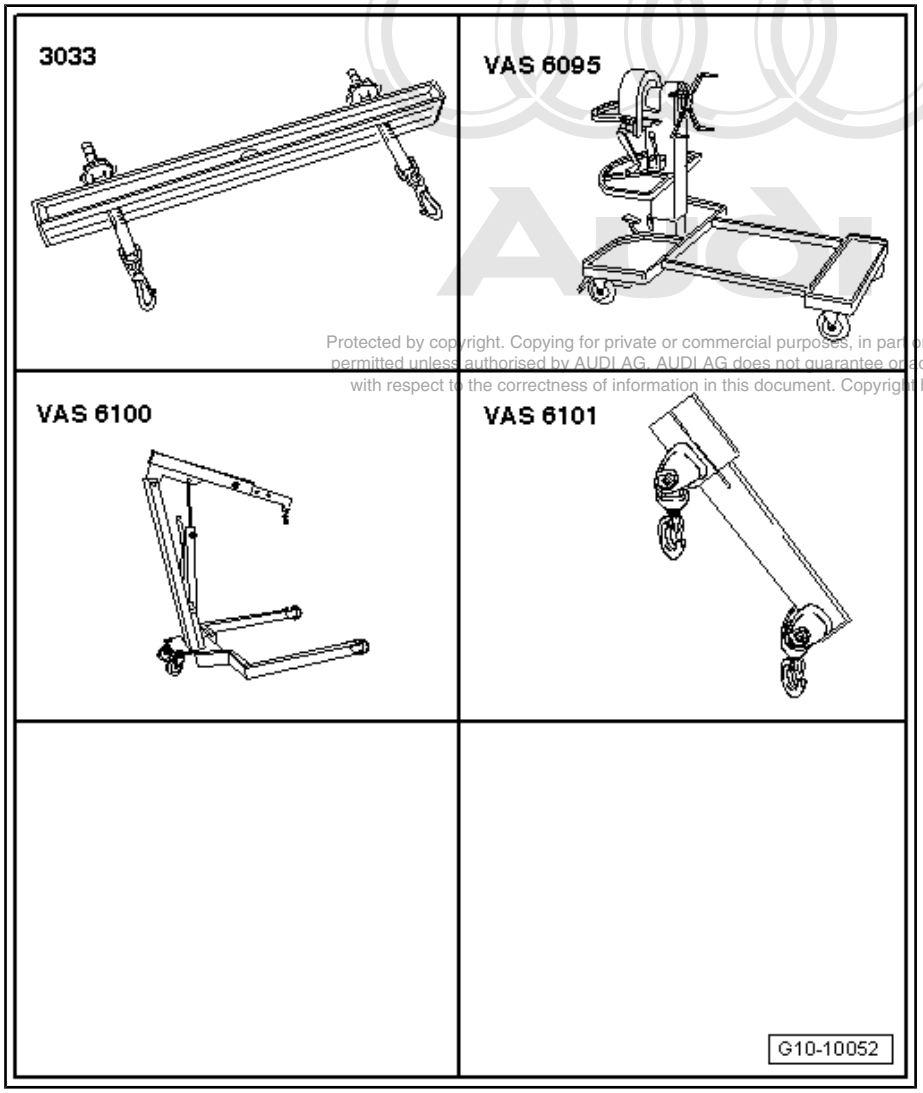

Protected by copyright. Copying for private or commercial purposes, in part or in whole, is not permitted unless authorised by AUDI AG. AUDI AG does not guarantee or accept any liability with respect to the correctness of information in this document. Copyright by AUDI AG.

- Hose clip pliers - VAS 6362-

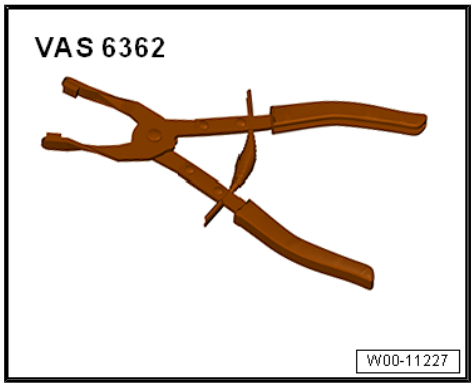

Procedure

- Engine/gearbox assembly removed; engine separated from gearbox ⇒ page 31 .
- Engine secured with support -VAS 6131/13-7- .

– Attach lifting tackle - 3033- to engine lifting eyes and workshop hoist - VAS 6100- with lift arm extension (workshop hoist) - VAS 6101- as shown in illustration.

– Take up weight of engine with workshop hoist, but do not lift.

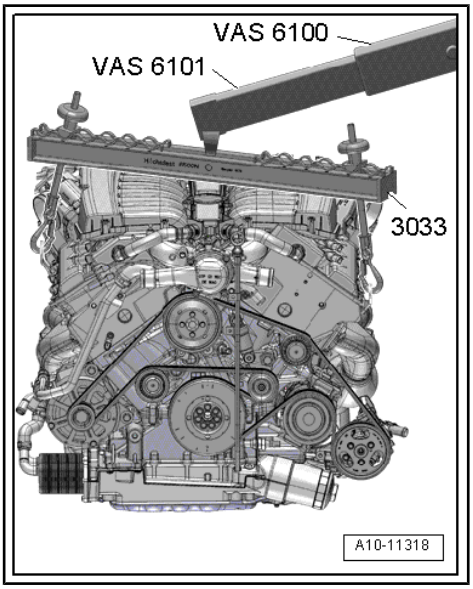

– Remove bolt -arrow- for engine mounting (left-side).

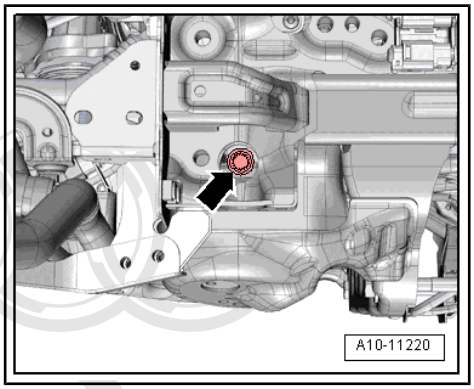

– Remove bolt -2- for engine mounting (right-side).

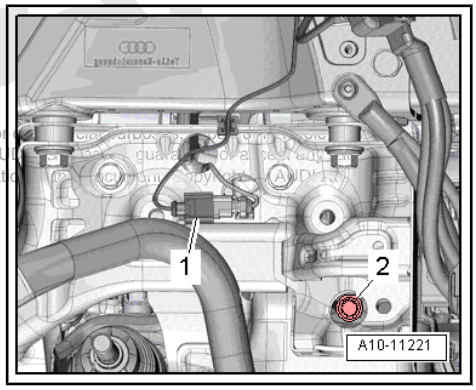

Note

Disregard -item 1-.

Protected by copyright. Copying for private or
permitted unless authorised by AUDI AG. AU
with respect to the correctness of informatio

– Remove support -VAS 6131/13-7- from engine.
– Lift off engine from engine cross member.

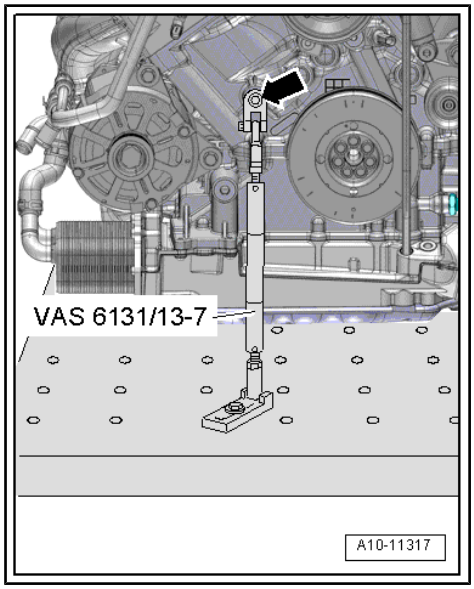

– Unscrew bolts -arrows- and remove engine support (left-side).

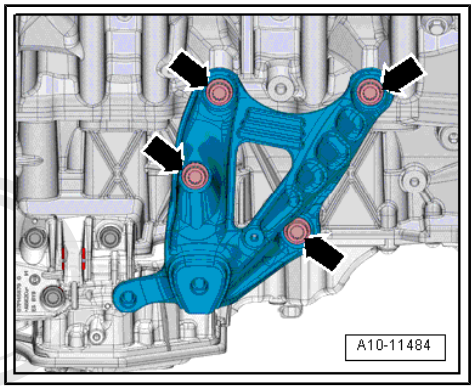

– Unscrew bolts -arrows- and remove engine support (right-side).
– Tie up starter on engine.

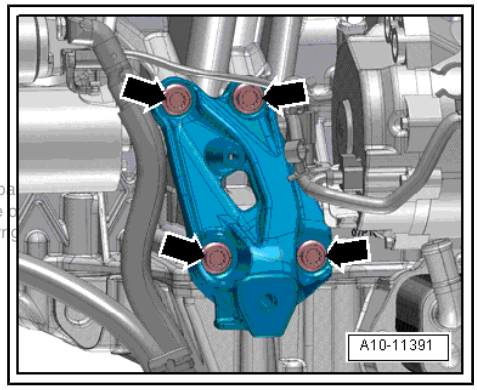

Protected by copyright. Copying for private or commercial purposes, in p
permitted unless authorised by AUDI AG. AUDI AG does not guarantee
with respect to the correctness of information in this document. Copyr

– Secure engine with bracket for W12 FSI engine - VAS 6095/1-12- to engine and gearbox support - VAS 6095- as shown in illustration and tighten to 40 Nm.

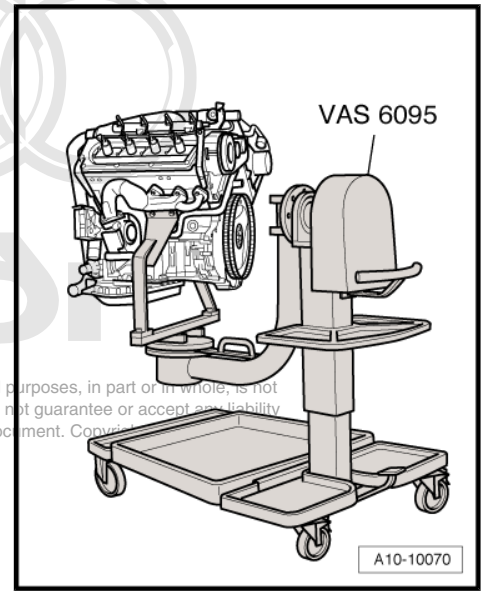

Protected by copyright. Copying for private or commercial purposes, in part or in whole, is not permitted unless authorised by AUDI AG. AUDI AG does not guarantee or accept any liability with respect to the correctness of information in this document. Copyright

1.4 Installing engine

Special tools and workshop equipment required

- Transport lock - T40170-

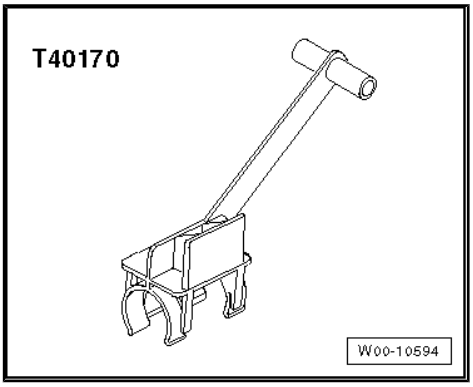

Tightening torques

Note

- *Tightening torques apply only to lightly greased, oiled, phosphated or black-finished nuts and bolts.*
- *Additional lubricants such as engine or gearbox oil may be used, but do not use lubricants containing graphite.*
- *Do not use de-greased parts.*
- *Tolerance for tightening torques: ± 15 %.*

Component		Nm
Bolts/nuts	M6	9
	M7	15
	M8	20
	M10	40
	M12	65

- Assembly mountings
⇒ “2.1 Exploded view - assembly mountings”, page 48

- Engine to gearbox ⇒ Rep. gr. 37 ; Removing and installing gearbox; Tightening torques for gearbox

Procedure

Note

- *Renew the bolts tightened with specified tightening angle.*
- *Renew self-locking nuts and bolts as well as seals, gaskets and O-rings.*
- *Hose connections and air pipes and hoses must be free of oil and grease before assembly.*
- *Secure all hose connections with the correct type of hose clips (same as original equipment) ⇒ Electronic parts catalogue .*
- *Fit all cable ties in the original positions when installing.*

– Install engine support and engine mounting ⇒ page 48 .

– The following preparations are required before joining engine and gearbox.

– Turn torque converter until hole is visible next to notch -arrow- in recess in bottom of gearbox housing, as shown in illustration.

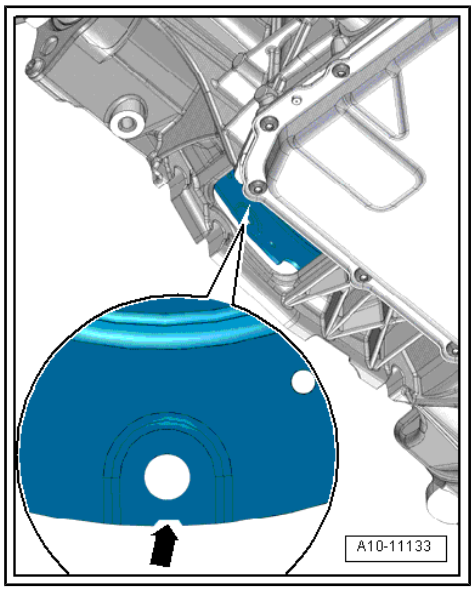

Note

Protected by copyright. Copying for private or commercial purposes, in part or in whole, is not permitted unless authorised by AUDI AG. AUDI AG does not guarantee or accept any liability with respect to the correctness of information in this document. Copyright by AUDI AG.

There is only one notch on the circumference; turn the torque converter accordingly.

– Insert transport lock - T40170- into gearbox housing from below and clamp onto flange shaft -1-.

– Hold ATF lines in installation position when joining engine and subframe.

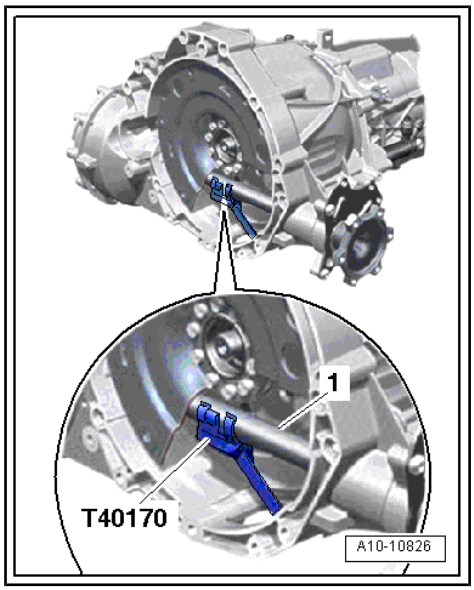

– Check whether dowel sleeves -A- for centring engine and gearbox are fitted in cylinder block; install missing dowel sleeves.
– Check whether aluminium bolts securing engine to gearbox can be reused; if so, apply marking ⇒ Rep. gr. 37 ; Removing and installing gearbox; Tightening torques for gearbox .
– Bring gearbox into position on engine (pay attention to starter).
– Tighten bolts -1 ... 14-.
– Remove transport lock - T40170- .

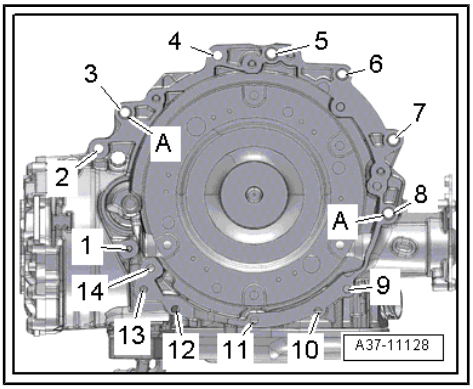

Note

The following step is necessary to ensure that the torque converter is straight and that it makes even contact with the drive plate.

– Use assembly lever -1- to press torque converter -2- slightly against drive plate -3- in direction of -arrow-.

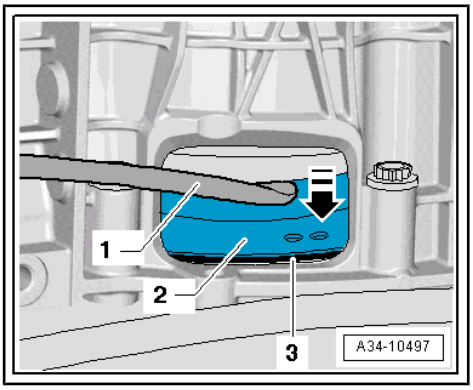

– Hand-tighten first bolt -arrow- (2 Nm).

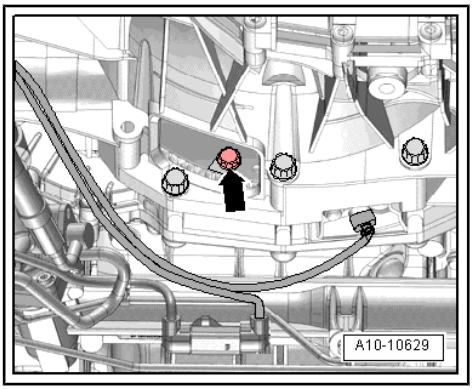

Protected by copyright. Copying for private or commercial purposes, in part or in whole, is not permitted unless authorised by AUDI AG. AUDI AG does not guarantee or accept any liability with respect to the correctness of information in this document. Copyright by AUDI AG.

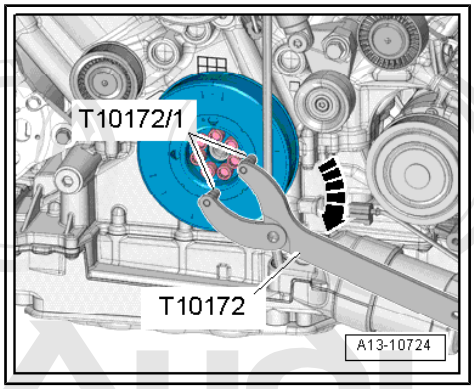

- Turn crankshaft 180° further in normal direction of engine rotation -arrow- with counterhold tool - T10172- and pins - T10172/1- .
- Tighten bolt accessible in this crankshaft position to specified torque ⇒ Rep. gr. 32 ; Torque converter; Exploded view - torque converter .
- Turn crankshaft by 60° each time and tighten remaining 5 bolts to specified torque ⇒ Rep. gr. 32 ; Torque converter; Exploded view - torque converter .
- Install idler roller for poly V-belt ⇒ page 63 .
- Secure drive shafts to gearbox flange shafts ⇒ Running gear, axles, steering; Rep. gr. 40 ; Drive shaft; Exploded view - drive shaft .
- Install ATF cooler ⇒ Rep. gr. 37 ; ATF circuit; Removing and installing ATF cooler .
- Install coolant pipe (right-side) on gearbox ⇒ page 217 .
- Install secondary air pumps ⇒ page 296 .
- Install ATF lines ⇒ Rep. gr. 37 ; ATF circuit; Removing and installing ATF lines .

Protected by copyright. Copying for private or commercial purposes, in part or in whole, is not permitted unless authorised by AUDI AG. AUDI AG does not guarantee or accept any liability with respect to the correctness of information in this document. Copyright by AUDI AG.

Vehicles up to model year 2013:

- Install power steering hydraulic line ⇒ Running gear, axles, steering; Rep. gr. 48 ; Hydraulic power steering; Exploded view - hydraulic lines, reservoir .

All vehicles (continued):

- Install exhaust manifolds with catalytic converters ⇒ “3.2 Renewing exhaust manifold gaskets”, page 301 .
- Install gearbox mounting with gearbox support ⇒ page 61 .

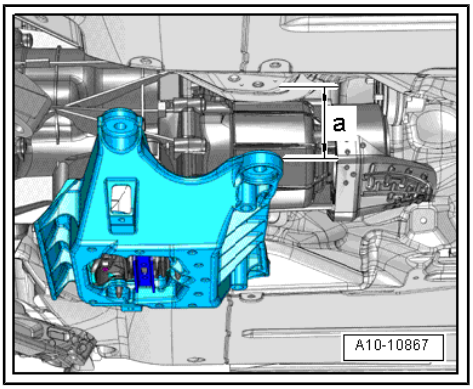

– Raise engine/gearbox assembly using scissor-type assembly platform - VAS 6131 A- initially only as far as distance -a-.

• Dimension -a- = min. 100 mm.

– Install air conditioner compressor ⇒ Heating, air conditioning; Rep. gr. 87 ; Air conditioner compressor; Detaching and attaching air conditioner compressor at bracket .

– Raise engine/gearbox assembly further using scissor-type assembly platform - VAS 6131 A- .

– Align subframe and tunnel cross member on longitudinal members according to markings made before removal.

– Tighten bolts for tunnel cross-piece ⇒ Rep. gr. 37 ; Assembly mountings; Exploded view - assembly mountings .

– Tighten subframe bolts only to specified torque (do not turn further); the bolts should only be fully tightened after performing the wheel alignment check ⇒ Running gear, axles, steering; Rep. gr. 40 ; Subframe; Exploded view - subframe .

WARNING

Risk of accident because of loose bolt connections.

- *Do NOT drive the vehicle unless the subframe bolts have been finally tightened.*

Remaining installation steps are carried out in reverse sequence; note the following:

– Install manual release cable ⇒ Rep. gr. 37 ; Selector mechanism; Exploded view - selector mechanism .

– Install propshaft ⇒ Final drive; Rep. gr. 39 ; Propshaft; Removing and installing propshaft .

– Secure intermediate steering shaft to steering rack ⇒ Running gear, axles, steering; Rep. gr. 48 ; Steering column; Removing and installing intermediate steering shaft .

– Install upper suspension links and suspension strut ⇒ Running gear, axles, steering; Rep. gr. 40 ; Suspension strut, upper links; Exploded view - suspension strut, upper links .

Protected by copyright. Copying for private or commercial purposes, in part or in whole, is not permitted unless authorised by AUDI AG. AUDI AG does not guarantee or accept any liability with respect to the correctness of information in this document. Copyright by AUDI AG.

– Install subframe cross brace and anti-roll bar ⇒ Running gear, axles, steering; Rep. gr. 40 ; Subframe; Exploded view - subframe .

– Install struts at gearbox mountings ⇒ page 48 .

– Install brake calipers ⇒ Brake system; Rep. gr. 46 ; Front brakes; Removing and installing brake caliper .

Vehicles up to model year 2013:

– Install power steering pump ⇒ Running gear, axles, steering; Rep. gr. 48 ; Hydraulic power steering; Removing and installing power steering pump .

All vehicles (continued):

– Install poly V-belt ⇒ page 66 .

– Install positive wires at positive terminal ⇒ Electrical system; Rep. gr. 27 ; Jump start terminal; Exploded view - jump start terminal .

– Install longitudinal members (bottom) ⇒ General body repairs, exterior; Rep. gr. 50 ; Lock carrier; Exploded view - lock carrier .

- Install air pipes ⇒ page 245 .
- Install electrical wiring, fuse holder and cover for electronics box in engine compartment ⇒ Electrical system; Rep. gr. 97 ; Relay carriers, fuse carriers, electronics boxes; Overview of fitting locations - relay carriers, fuse carriers, electronics boxes , and ⇒ Current flow diagrams, Electrical fault finding and Fitting locations.
- Install refrigerant lines ⇒ Heating, air conditioning; Rep. gr. 87 ; Refrigerant circuit; Exploded view - condenser .
- Install plenum chamber cover ⇒ General body repairs, exterior; Rep. gr. 50 ; Bulkhead; Removing and installing plenum chamber cover .
- Observe steps required after re-connecting battery ⇒ Electrical system; Rep. gr. 27 ; Battery; Disconnecting and connecting battery .
- Install body brace ⇒ Running gear, axles, steering; Rep. gr. 40 ; Suspension strut, upper links; Exploded view - suspension strut, upper links .
- Install air cleaner housing ⇒ page 245 .
- Install upper longitudinal member ⇒ General body repairs, exterior; Rep. gr. 50 ; Lock carrier; Exploded view - lock carrier

Caution

Risk of irreparable damage to control units because of excessive voltage.

- *Never use battery charging equipment for boost starting.*

- Install engine cover panel ⇒ page 62 .
- Fill with engine oil and check oil level ⇒ Maintenance ; Booklet 410 .

Vehicles up to model year 2013:

- Before starting engine, top up hydraulic fluid in power steering reservoir ⇒ Running gear, axles, steering; Rep. gr. 48 ; Hydraulic power steering; Checking power steering fluid level .

Note

The power steering pump must not be run when dry.

All vehicles (continued):

Note

Protected by copyright. Copying for private or commercial purposes, in part or in whole, is not permitted unless authorised by AUDI AG. AUDI AG does not guarantee or accept any liability with respect to the correctness of information in this document. Copyright by AUDI AG.

Do not reuse coolant.

- Connect coolant hoses with plug-in connector ⇒ page 221 .
- Fill up with coolant ⇒ page 190 .
- Charge refrigerant system ⇒ Air conditioner with refrigerant R134a .
- Align subframe ⇒ Running gear, axles, steering; Rep. gr. 40 ; Subframe; Removing and installing subframe with steering rack .

– Install front wheel housing liners ⇒ General body repairs, exterior; Rep. gr. 66 ; Wheel housing liner; Exploded view - front wheel housing liner .

– Install lock carrier cover ⇒ General body repairs, exterior; Rep. gr. 63 ; Bumper (front); Removing and installing attachments .

– Check wheel alignment ⇒ Running gear, axles, steering; Rep. gr. 44 ; Wheel alignment check; Wheel alignment procedure .

WARNING

Risk of accident because of loose bolt connections.

- *Tighten subframe bolts to final setting after performing wheel alignment check.*

– Top up ATF ⇒ Rep. gr. 37 ; ATF; Checking ATF level .

– Install noise insulation panels ⇒ General body repairs, exterior; Rep. gr. 66 ; Noise insulation; Exploded view - noise insulation .

– After renewing engine, misfire adaptions must be reset. To do so, select “01 - Reset adaptions misfires” in `Guided Functions` mode of ⇒ Vehicle diagnostic tester.

Protected by copyright. Copying for private or commercial purposes, in part or in whole, is not permitted unless authorised by AUDI AG. AUDI AG does not guarantee or accept any liability with respect to the correctness of information in this document. Copyright by AUDI AG.

2 Assembly mountings

⇒ “2.1 Exploded view - assembly mountings”, page 48
⇒ “2.2 Supporting engine in installation position”, page 50
⇒ “2.3 Removing and installing engine mountings”, page 52
⇒ “2.4 Removing and installing gearbox mounting”, page 59

2.1 Exploded view - assembly mountings

Engine mounting

1 - Nut
- ❑ 20 Nm

2 - Engine mounting
- ❑ Left side with left electrohydraulic engine mounting solenoid valve - N144-
- ❑ Right side with right electrohydraulic engine mounting solenoid valve - N145-
- ❑ Removing and installing ⇒ page 52

3 - Bolt
- ❑ Tightening torque ⇒ page 49

4 - Bolt
- ❑ 40 Nm

5 - Engine support

6 - Bolt
- ❑ 40 Nm

7 - Bolt
- ❑ Tightening torque ⇒ page 49

8 - Bolt

9 - Subframe

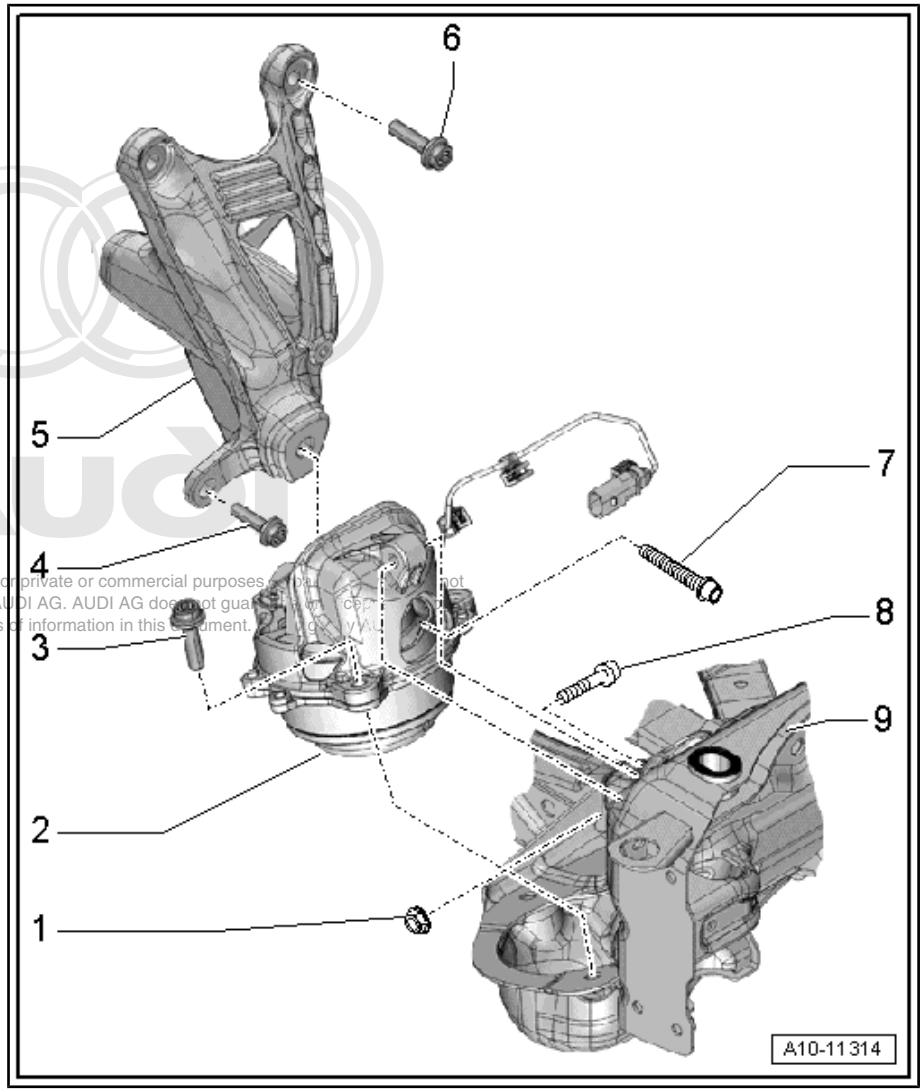

Protected by copyright. Copying for private or commercial purposes, in part or in whole, is not permitted unless authorised by AUDI AG. AUDI AG does not guarantee or assume any liability with respect to the correctness of information in this document. Copyright by AUDI AG.

Tightening torque for engine mounting

– Tighten bolts in 2 stages as follows:

Stage	Bolts	Tightening torque
1.	-arrows- and -2-	Screw in by hand until contact is made
2.	-arrows- and -2-	20 Nm

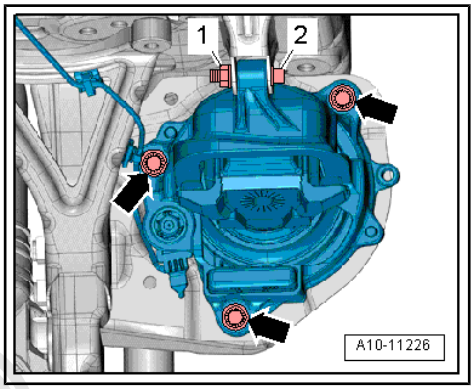

Gearbox mounting

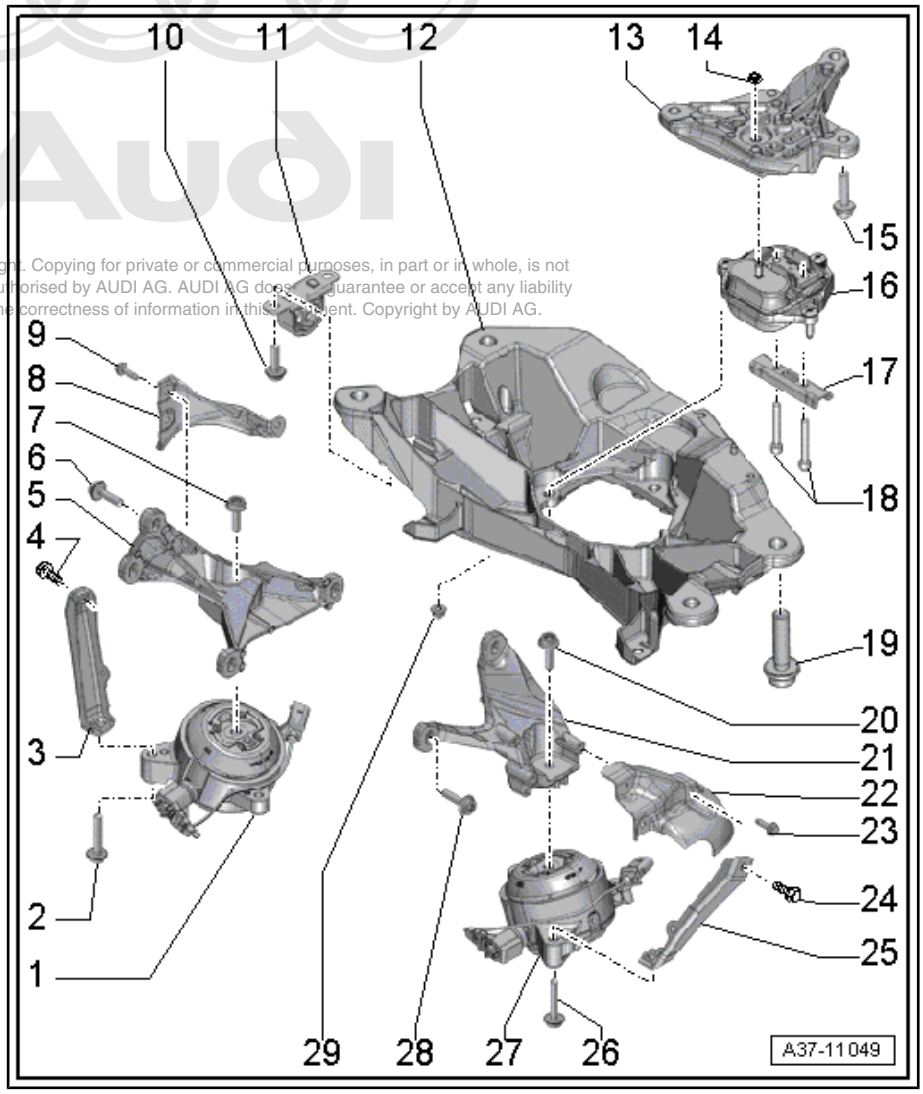

Protected by copyright. Copying for private or commercial purposes, in part or in whole, is not permitted unless authorised by AUDI AG. AUDI AG does not guarantee or accept any liability with respect to the correctness of information in this document. Copyright by AUDI AG.

1 - Gearbox mounting (right-side)

- ❑ With gearbox mounting valve 1 - N262-
- ❑ Removing and installing ⇒ page 59

2 - Bolt

- ❑ Tightening torque ⇒ Rep. gr. 37 ; Assembly mountings; Exploded view - assembly mountings

3 - Support

4 - Bolt

- ❑ 20 Nm

5 - Gearbox support (right-side)

6 - Bolt

- ❑ 20 Nm

7 - Bolt

- ❑ Tightening torque ⇒ Rep. gr. 37 ; Assembly mountings; Exploded view - assembly mountings

8 - Heat shield

9 - Bolt

- ❑ Tightening torque ⇒ Rep. gr. 37 ; Assembly mountings; Exploded view - assembly mountings

10 - Not fitted

11 - Not fitted

12 - Tunnel cross-member

- ❑ Removing and installing ⇒ Rep. gr. 37 ; Assembly mountings; Exploded view - assembly mountings

13 - Gearbox support (rear)

- ❑ Removing and installing ⇒ page 61

14 - Nut

- ❑ Only remove if detaching gearbox mounting from gearbox support
- ❑ Tightening torque ⇒ Rep. gr. 37 ; Assembly mountings; Exploded view - assembly mountings

15 - Bolt

- ❑ Tightening torque ⇒ Rep. gr. 37 ; Assembly mountings; Exploded view - assembly mountings

16 - Gearbox mounting (rear)

- ❑ Removing and installing ⇒ page 61

17 - Stop (bottom)

- ❑ For gearbox mounting (rear)

18 - Bolts

- ❑ Only remove if detaching gearbox mounting from gearbox support
- ❑ Tightening torque ⇒ Rep. gr. 37 ; Assembly mountings; Exploded view - assembly mountings

19 - Bolt

- ❑ Tightening torque ⇒ Rep. gr. 37 ; Assembly mountings; Exploded view - assembly mountings

20 - Bolt

- ❑ Tightening torque ⇒ Rep. gr. 37 ; Assembly mountings; Exploded view - assembly mountings

21 - Gearbox support (left-side)

22 - Heat shield

23 - Bolt

- ❑ Tightening torque ⇒ Rep. gr. 37 ; Assembly mountings; Exploded view - assembly mountings

Reproduction or duplication of this document or any part thereof is not permitted unless authorised by AUDI AG. AUDI AG does not guarantee or accept any liability with respect to the correctness of information in this document. Copyright by AUDI AG.

24 - Bolt

- ❑ Tightening torque ⇒ Rep. gr. 37 ; Assembly mountings; Exploded view - assembly mountings

25 - Support

26 - Bolt

- ❑ Tightening torque ⇒ Rep. gr. 37 ; Assembly mountings; Exploded view - assembly mountings

27 - Gearbox mounting (left-side)

- ❑ With gearbox mounting valve 2 - N263-
- ❑ Removing and installing ⇒ page 59

28 - Bolt

- ❑ Tightening torque ⇒ Rep. gr. 37 ; Assembly mountings; Exploded view - assembly mountings

29 - Nut

- ❑ Tightening torque ⇒ Rep. gr. 37 ; Assembly mountings; Exploded view - assembly mountings

2.2 Supporting engine in installation position

Special tools and workshop equipment required

- Support bracket - 10 - 222 A-

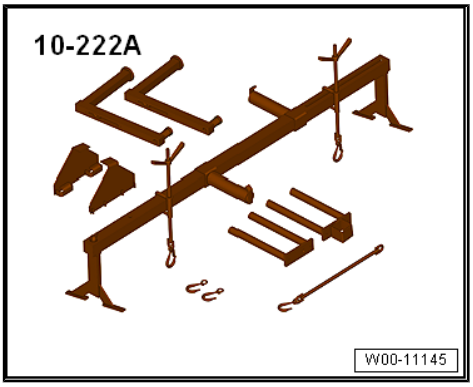

- Shackle - 10 - 222 A /12-

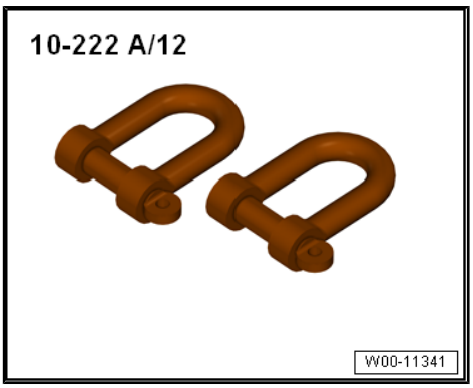

- Extension -2024 A /1-

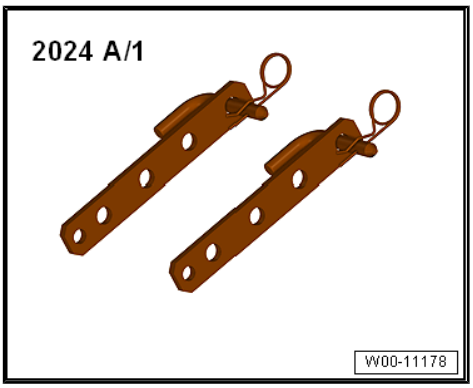

- Engine support bracket (basic set) - T40091-

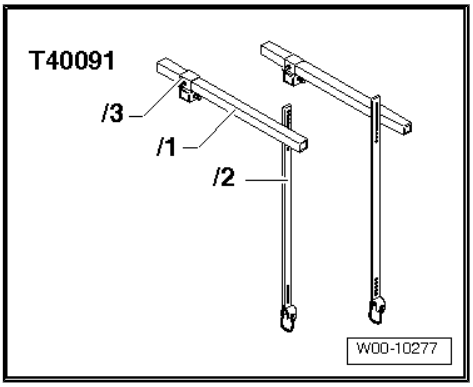

Protected by copyright. Copying for private or commercial purposes, in part or in whole, is not permitted unless authorised by AUDI AG. AUDI AG does not guarantee or accept any liability with respect to the correctness of information in this document. Copyright by AUDI AG.

- Engine support bracket (supplementary set) - T40093- with - T40093/7- and -T40093/8-

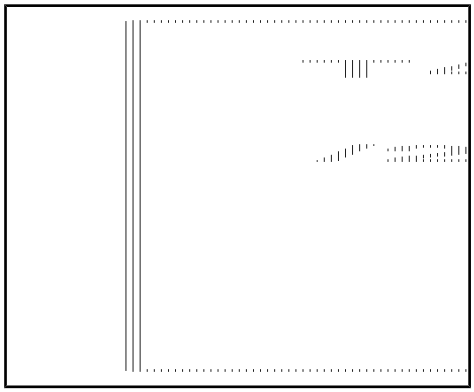

Procedure

– Remove air cleaner housing (left and right) ⇒ page 245 .

– Set up support bracket - 10 - 222 A- on suspension turrets (left and right) as illustrated.

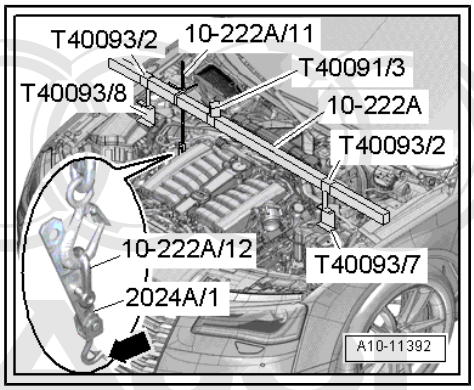

– Set up further tools as shown in illustration.

– Engage spindles on engine lifting eyes and partly take up weight of engine.

Protected by copyright. Copying for pri n whole, is not permitted unless authorised by A cept any liability with respect to the correctn y AUDI AG.

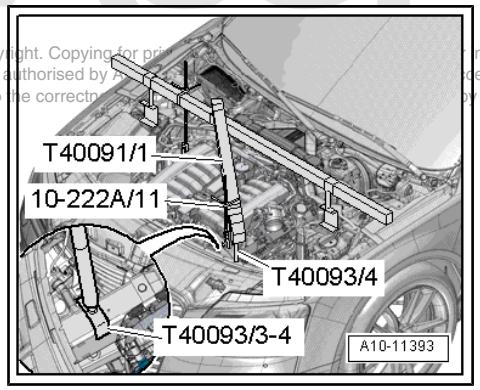

Assembling

Installation is carried out in the reverse order; note the following:

– Install air cleaner housing ⇒ page 245 .

2.3 Removing and installing engine mountings

Special tools and workshop equipment required

- Engine and gearbox jack - V.A.G 1383 A-

Removing

Note

Fit all cable ties in the original positions when installing.

– Set front wheels to straight-ahead position.

Caution

Electronic components are susceptible to damage.

- ***Observe notes on procedure for disconnecting the battery.***

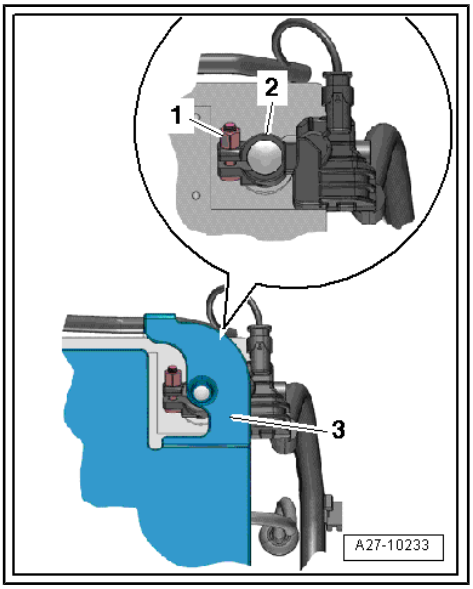

– Disconnect earth wire -2- from battery terminal ⇒ Electrical system; Rep. gr. 27 ; Battery, Disconnecting and connecting battery .

– Support engine in installation position ⇒ page 50 .

– Completely remove wheel housing liners (front left and front right) ⇒ General body repairs, exterior; Rep. gr. 66 ; Wheel housing liner; Removing and installing wheel housing liner (front) .

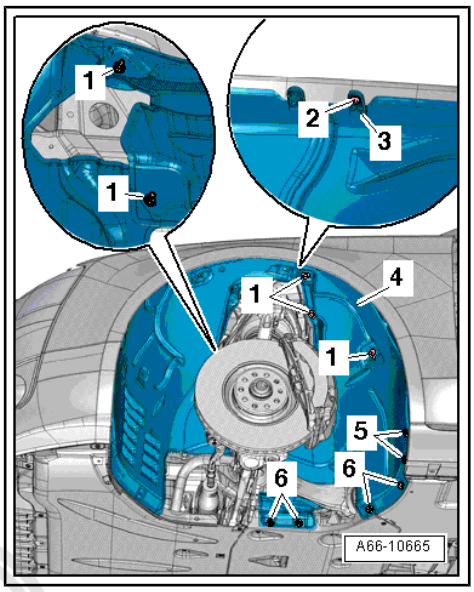

– Remove noise insulation panels -1- and -2- ⇒ General body repairs, exterior; Rep. gr. 66 ; Noise insulation; Removing and installing noise insulation .

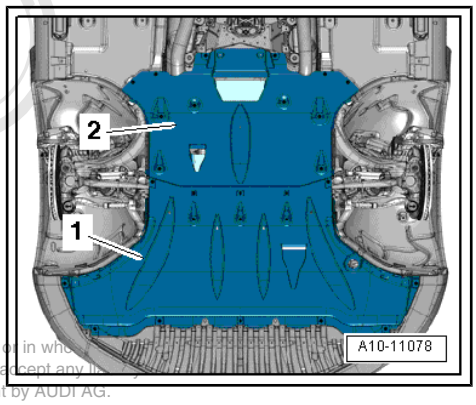

Protected by copyright. Copying for private or commercial purposes, in part or in whole, is not permitted unless authorised by AUDI AG. AUDI AG does not guarantee or accept any liability with respect to the correctness of information in this document. Copyright by AUDI AG.

– Unbolt drive shaft (left and right) from gearbox flange shafts ⇒ Running gear, axles, steering; Rep. gr. 40 ; Drive shaft; Removing and installing drive shaft .

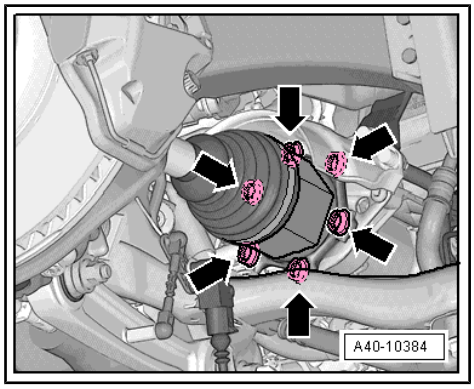

– Remove front underbody trim panels (left and right) -2- ⇒ General body repairs, exterior; Rep. gr. 66 ; Underbody trim; Removing and installing underbody trim .

– Remove longitudinal member (bottom left and right) ⇒ General body repairs, exterior; Rep. gr. 50 ; Lock carrier; Exploded view - lock carrier .

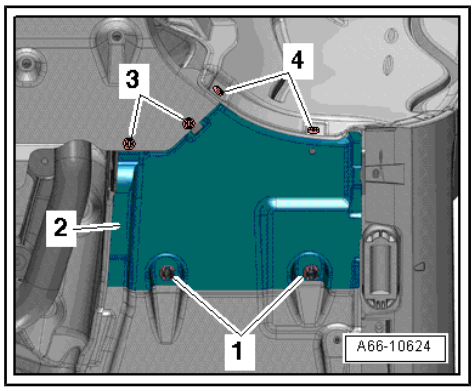

– If fitted, remove electrical connector -1- from bracket and unplug it.

– Detach electrical connector -2- for steering rack from bracket and unplug.

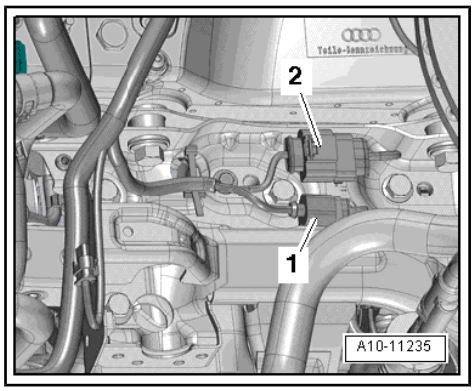

– Unplug electrical connector -arrow- at front vehicle level sender -G78- / -G289- and move electrical wiring clear.

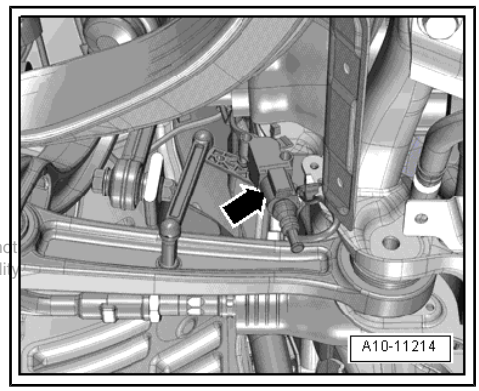

Protected by copyright. Copying for private or commercial purposes, in part or in whole, is not permitted unless authorised by AUDI AG. AUDI AG does not guarantee or accept any liability with respect to the correctness of information in this document. Copyright by AUDI AG.

– Remove bolt -1- for anti-roll bar on both sides.

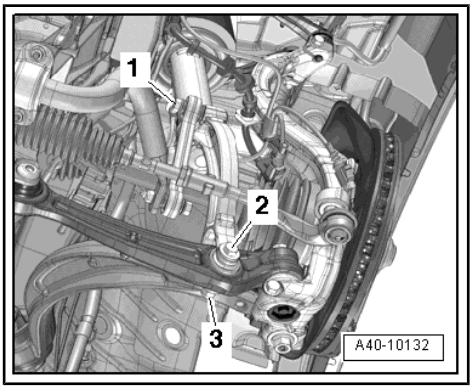

Note

Disregard -items 2, 3-.

Protected by copyright. Copying for private or commercial purposes, in part or in whole, is not permitted unless authorised by AUDI AG. AUDI AG does not guarantee or accept any liability with respect to the correctness of information in this document. Copyright by AUDI AG.

– Remove bolts (left and right) -3- securing gearbox mounting strut.

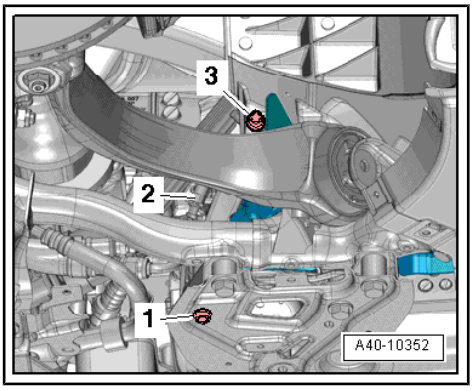

Note

Disregard -items 1, 2-.

Vehicles up to model year 2013:

– Remove bolt -arrow- for power steering hydraulic line.

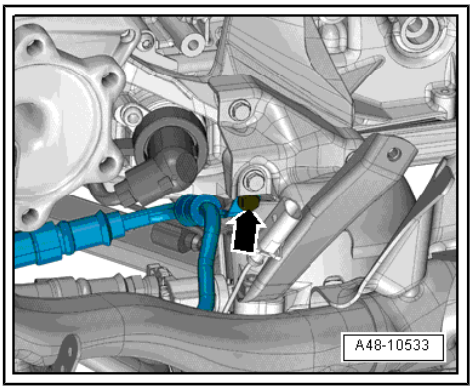

All vehicles (continued):

– Remove bolts -1, 2- and, if fitted, nut -arrow-.

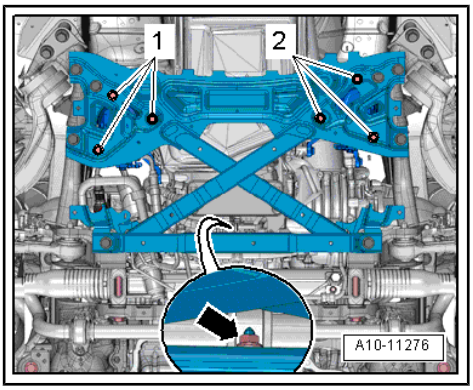

Caution

Risk of damage to running gear components.

- *The vehicle must NOT be lowered onto its wheels if the engine/gearbox mountings, steering rack or subframe cross brace are not properly installed.*

– Move clear electrical connectors -1 and 2- for gearbox mounting valves -N262- / -N263- .

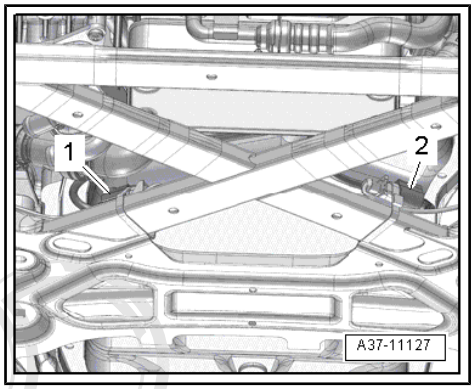

– Detach intermediate steering shaft from steering rack and move clear by telescoping upwards ⇒ Running gear, axles, steering; Rep. gr. 48 ; Steering column; Removing and installing intermediate steering shaft .

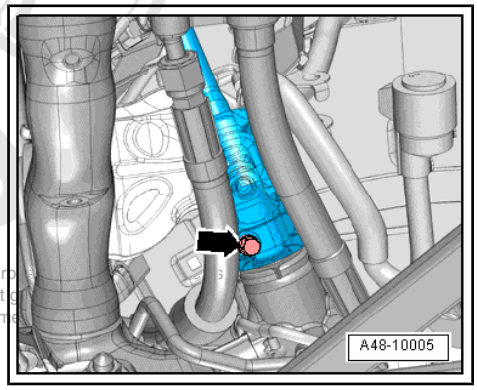

Note

Illustration shows vehicle version up to model year 2013.

Protected by copyright. Copying for private or commercial purp
permitted unless authorised by AUDI AG. AUDI AG does not g
with respect to the correctness of information in this docum

Vehicles up to model year 2013:

– Remove bolts -arrows- for hydraulic line.

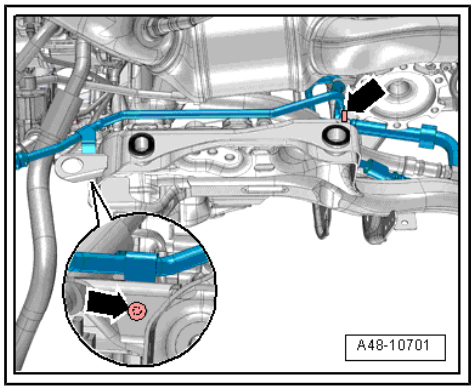

All vehicles (continued):

– Remove bolt -arrow- for engine mounting (left-side).

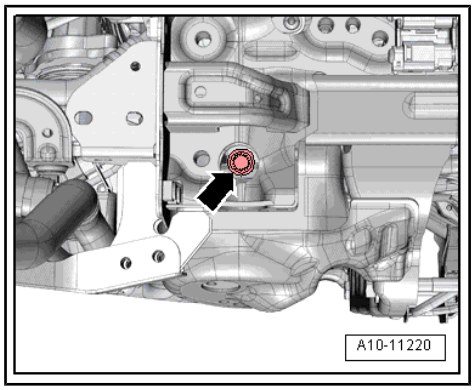

– If fitted, move clear and unplug electrical connector -1-.
– Remove bolt -2- for engine mounting (right-side).

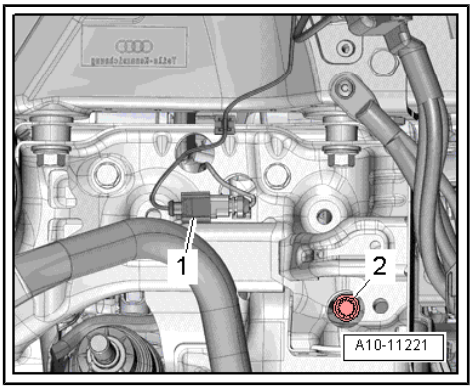

– Support subframe using engine and gearbox jack - V.A.G 1383 A- as illustrated.

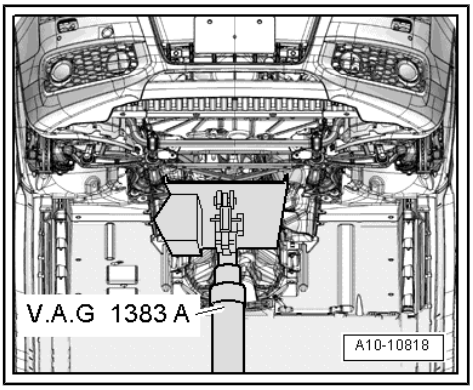

– Mark installation position of subframe on longitudinal members with felt-tip pen.
– Unscrew subframe bolts -1, 2, 3- on both sides in several stages and in diagonal sequence.

Protected by copyright. Copying for private or commercial purposes, in part or in whole, is not permitted unless authorised by AUDI AG. AUDI AG does not guarantee or accept any liability with respect to the correctness of information in this document. Copyright by AUDI AG.

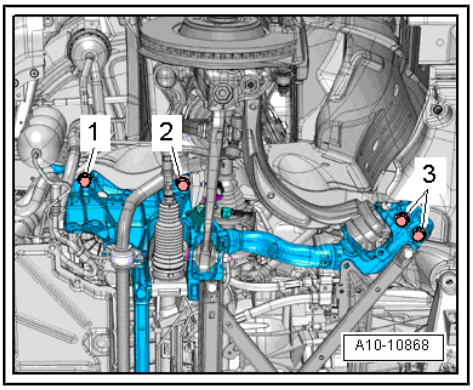

Caution

Risk of damage to running gear components.

- *The vehicle must NOT be lowered onto its wheels if the engine/gearbox mountings, steering rack or subframe cross brace are not properly installed.*

– Lower subframe using engine and gearbox jack - V.A.G 1383 A- just far enough so that corresponding engine mounting is accessible.

Note

Make sure there is sufficient clearance for hydraulic hoses (left-side) and electrical wiring (right-side).

– Move clear electrical wiring for electrohydraulic engine mounting solenoid valve.

– Remove nut -1- and bolt -2-.

– Remove bolts -arrows- and detach engine mounting.

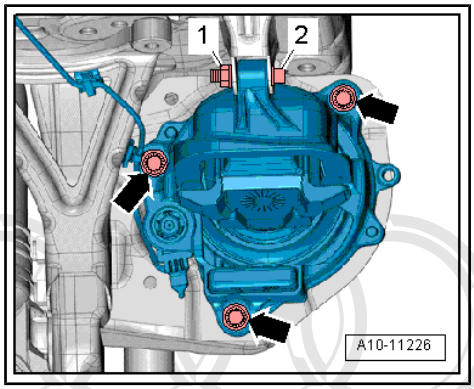

Note

The illustration shows the engine mounting on the left side; it is similar on the right side.

Installing

Installation is carried out in the reverse order; note the following:

Note

Renew the bolts tightened with specified tightening angle.

– Align subframe on longitudinal members according to markings made before removal.

– Tighten subframe bolts only to specified torque (do not turn further); the bolts should only be fully tightened after performing the wheel alignment check ⇒ Running gear, axles, steering; Rep. gr. 44 ; Wheel alignment check; Wheel alignment procedure .

WARNING

Risk of accident because of loose bolt connections.

- *Do NOT drive the vehicle unless the subframe bolts have been finally tightened.*

– Install subframe cross brace and anti-roll bar ⇒ Running gear, axles, steering; Rep. gr. 40 ; Subframe; Exploded view - subframe .

– Install gearbox mounting and gearbox mounting strut.

Vehicles up to model year 2013:

– Install power steering hydraulic line ⇒ Running gear, axles, steering; Rep. gr. 48 ; Hydraulic power steering; Exploded view - hydraulic lines, reservoir .

All vehicles (continued):

– Secure intermediate steering shaft to steering rack ⇒ Running gear, axles, steering; Rep. gr. 48 ; Steering column; Removing and installing intermediate steering shaft .

– Install longitudinal members (bottom) ⇒ General body repairs, exterior; Rep. gr. 50 ; Lock carrier; Exploded view - lock carrier .

– Install electrical wiring and terminal 30 wiring junction 2 - TV22- ⇒ Electrical system; Rep. gr. 97 ; Relay carriers, fuse carriers, electronics boxes; Overview of fitting locations - relay carriers, fuse carriers, electronics boxes , and ⇒ Current flow diagrams, Electrical fault finding and Fitting locations.

– Observe steps required after re-connecting battery ⇒ Electrical system; Rep. gr. 27 ; Battery; Disconnecting and connecting battery .

Protected by copyright. Copying for private or commercial purposes, in part or in whole, is not permitted unless authorised by AUDI AG. AUDI AG does not guarantee or accept any liability with respect to the correctness of information in this document. Copyright by AUDI AG.

– Install air cleaner housing ⇒ page 245 .

– Secure drive shafts to gearbox flange shafts ⇒ Running gear, axles, steering; Rep. gr. 40 ; Drive shaft; Exploded view - drive shaft .

– Check wheel alignment ⇒ Running gear, axles, steering; Rep. gr. 44 ; Wheel alignment check; Wheel alignment procedure .

WARNING

Risk of accident because of loose bolt connections.

- *Tighten subframe bolts to final setting after performing wheel alignment check.*

– Install underbody trim panels ⇒ General body repairs, exterior; Rep. gr. 66 ; Underbody trim; Exploded view - underbody trim .

Tightening torques

- ⇒ “2.1 Exploded view - assembly mountings”, page 48
- ⇒ General body repairs, exterior; Rep. gr. 66 ; Noise insulation; Exploded view - noise insulation
- ⇒ General body repairs, exterior; Rep. gr. 66 ; Wheel housing liner; Exploded view - wheel housing liner (front)

2.4 Removing and installing gearbox mounting

⇒ “2.4.1 Removing and installing gearbox mounting”, page 59

⇒ “2.4.2 Removing and installing gearbox support with gearbox mounting (rear)”, page 61

⇒ “2.4.3 Removing and installing gearbox mounting (rear)”, page 61

2.4.1 Removing and installing gearbox mounting

Removing

Note

The following instructions describe the removal and installation of the gearbox mounting on the right side of the vehicle.

Protected by copyright. Copying for private or commercial purposes, in part or in whole, is not permitted unless authorised by AUDI AG. AUDI AG does not guarantee or accept any liability with respect to the correctness of information in this document. Copyright by AUDI AG.

– Remove rear section of front wheel housing liner (right-side) ⇒ General body repairs, exterior; Rep. gr. 66 ; Wheel housing liner; Removing and installing wheel housing liner (front) .

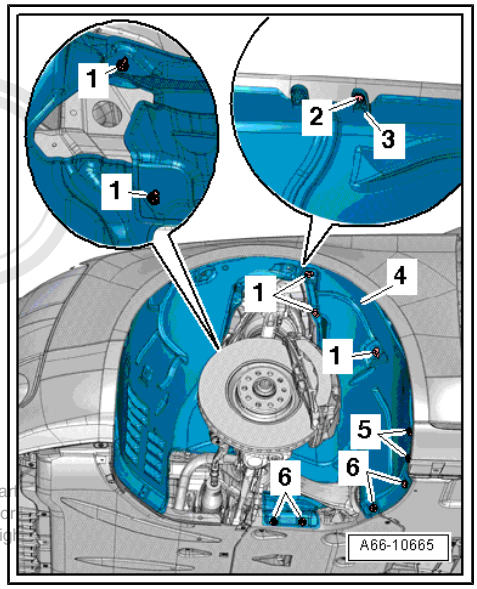

Protected by copyright. Copying for private or commercial purposes, in pa
permitted unless authorised by AUDI AG. AUDI AG does not guarantee o
with respect to the correctness of information in this document. Copyrig

– Remove subframe cross brace ⇒ Running gear, axles, steering; Rep. gr. 40 ; Subframe; Removing and installing subframe cross brace .

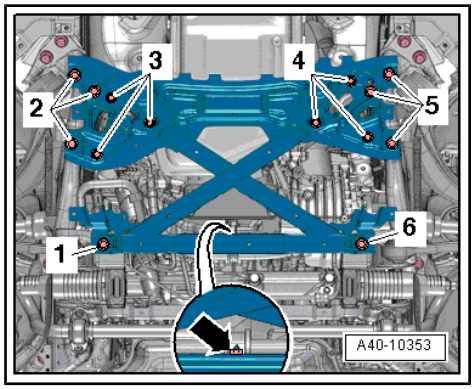

Caution

Risk of damage to running gear components.

- *The vehicle must NOT be lowered onto its wheels if the engine/gearbox mountings, steering rack or subframe cross brace are not properly installed.*

Electrical connectors, version 1:

– Unplug electrical connector -1- for gearbox mounting valve 1 - N262- and move electrical wiring clear.

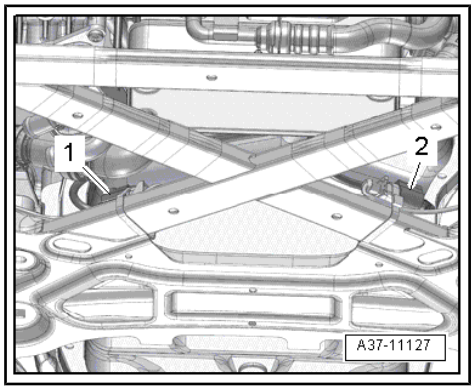

Note

Disregard -item 2-.

Electrical connectors, version 2:

– Remove electrical connector -1- for gearbox mounting valve 1 - N262- from bracket and unplug connector.

All vehicles (continued):

– Unscrew bolt -2- and remove strut.

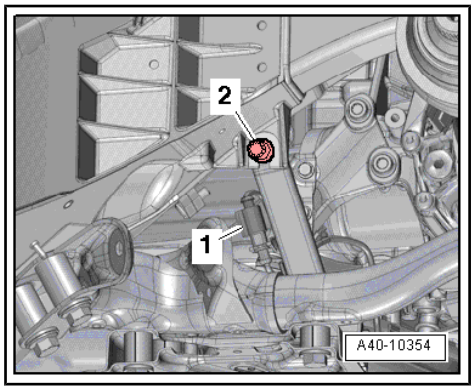

– Remove bolts -arrows- and detach heat shield -1-.

– Remove bolt -2- and detach gearbox mounting from gearbox support.

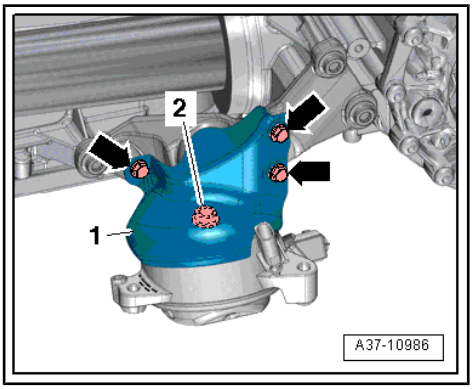

Installing

Installation is carried out in the reverse order; note the following:

– Install subframe cross brace ⇒ Running gear, axles, steering; Rep. gr. 40 ; Subframe; Exploded view - subframe .

Tightening torques

♦ ⇒ “2.1 Exploded view - assembly mountings”, page 48

♦ ⇒ General body repairs, exterior; Rep. gr. 66 ; Wheel housing liner; Exploded view - wheel housing liner (front)

2.4.2 Removing and installing gearbox support with gearbox mounting (rear)

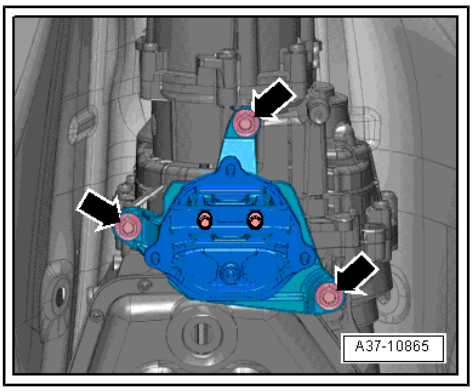

Removing

– Remove tunnel cross-piece ⇒ Rep. gr. 37 ; Assembly mountings; Exploded view - assembly mountings .

– Remove bolts -arrows- and detach gearbox support and gearbox mounting from gearbox.

Installing

Install in reverse order.

Tightening torques

♦ ⇒ “2.1 Exploded view - assembly mountings”, page 48

♦ Tunnel cross-piece ⇒ Rep. gr. 37 ; Assembly mountings; Exploded view - assembly mountings

2.4.3 Removing and installing gearbox mounting (rear)

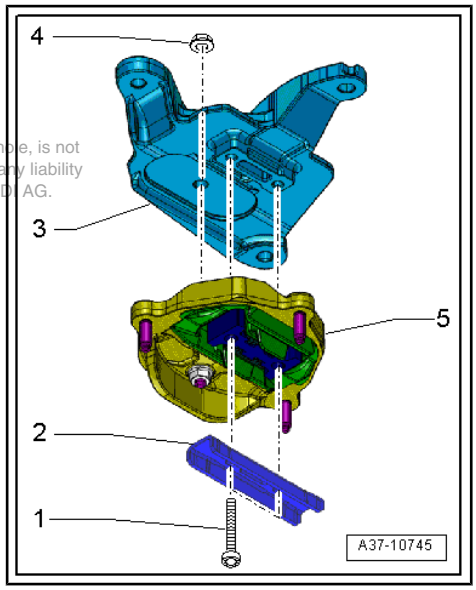

Removing

– Remove gearbox support with gearbox mounting (rear) ⇒ page 61 .

– Unscrew bolts -1- and detach stop (bottom) -2- for gearbox mounting.

Protected by copyright. Copying for private or commercial purposes, in part or in whole, is not permitted unless authorised by AUDI AG. AUDI AG does not guarantee or accept any liability with respect to the correctness of information in this document. Copyright by AUDI AG.

– Remove nut -4- and detach gearbox mounting -5- from gearbox support.

Installing

– Position gearbox support -3- on gearbox mounting -5-.

– Hand-tighten nut -4-.

– Secure stop (bottom) -2- with bolts -1-.

– Tighten nut -4-.

– Install gearbox support with gearbox mounting (rear) ⇒ page 61 .

Tightening torques

♦ ⇒ “2.1 Exploded view - assembly mountings”, page 48

3 Engine cover panel

⇒ “3.1 Removing and installing engine cover panel”, page 62

3.1 Removing and installing engine cover panel

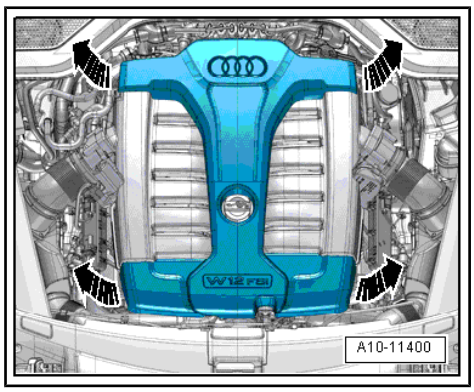

Removing

– Carefully pull the engine cover panel off the four fasteners one after the other -arrows-. Do not jerk the cover panel away, and do not try to pull on one side only.

Installing

– To avoid damage, do not strike the engine cover panel with your fist or with any kind of tool.

– First press the engine cover panel with both hands into the ball studs at the rear and then into the ball studs at the front.

Protected by copyright. Copying for private or commercial purposes, in part or in whole, is not permitted unless authorised by AUDI AG. AUDI AG does not guarantee or accept any liability with respect to the correctness of information in this document. Copyright by AUDI AG.

13 – Crankshaft group

1 Cylinder block (pulley end)

⇒ "1.1 Exploded view - poly V-belt drive", page 63

⇒ "1.2 Removing and installing poly V-belt", page 66

⇒ "1.3 Checking alignment of pulley", page 68

⇒ "1.4 Removing and installing vibration damper", page 69

⇒ "1.5 Removing and installing bracket for ancillaries", page 70

⇒ "1.6 Renewing crankshaft oil seal (pulley end)", page 74

1.1 Exploded view - poly V-belt drive

⇒ "1.1.1 Exploded view - poly V-belt, vehicles up to model year 2013", page 63

⇒ "1.1.2 Exploded view - poly V-belt, vehicles from model year 2014 onwards", page 65

1.1.1 Exploded view - poly V-belt, vehicles up to model year 2013

Protected by copyright. Copying for private or commercial purposes, in part or in whole, is not permitted unless authorised by AUDI AG. AUDI AG does not guarantee or accept any liability with respect to the correctness of information in this document. Copyright by AUDI AG.

1 - Poly V-belt
- ❑ Check for wear
- ❑ Before removing, mark direction of rotation with chalk or felt-tip pen
- ❑ Removing and installing ⇒ page 66
- ❑ Do not kink
- ❑ When installing, make sure it is properly seated on pulleys

2 - Vibration damper
- ❑ With poly V-belt pulley
- ❑ Version fitted in vehicle may differ from illustration
- ❑ Removing and installing ⇒ page 69

3 - Bolt
- ❑ Renew
- ❑ 40 Nm + turn 90° further

4 - Cover cap
- ❑ For idler roller

5 - Idler roller (right-side)
- ❑ For poly V-belt
- ❑ 32 Nm

6 - Bolt
- ❑ Tightening torque ⇒ Electrical system; Rep. gr. 27 ; Alternator; Exploded view - alternator

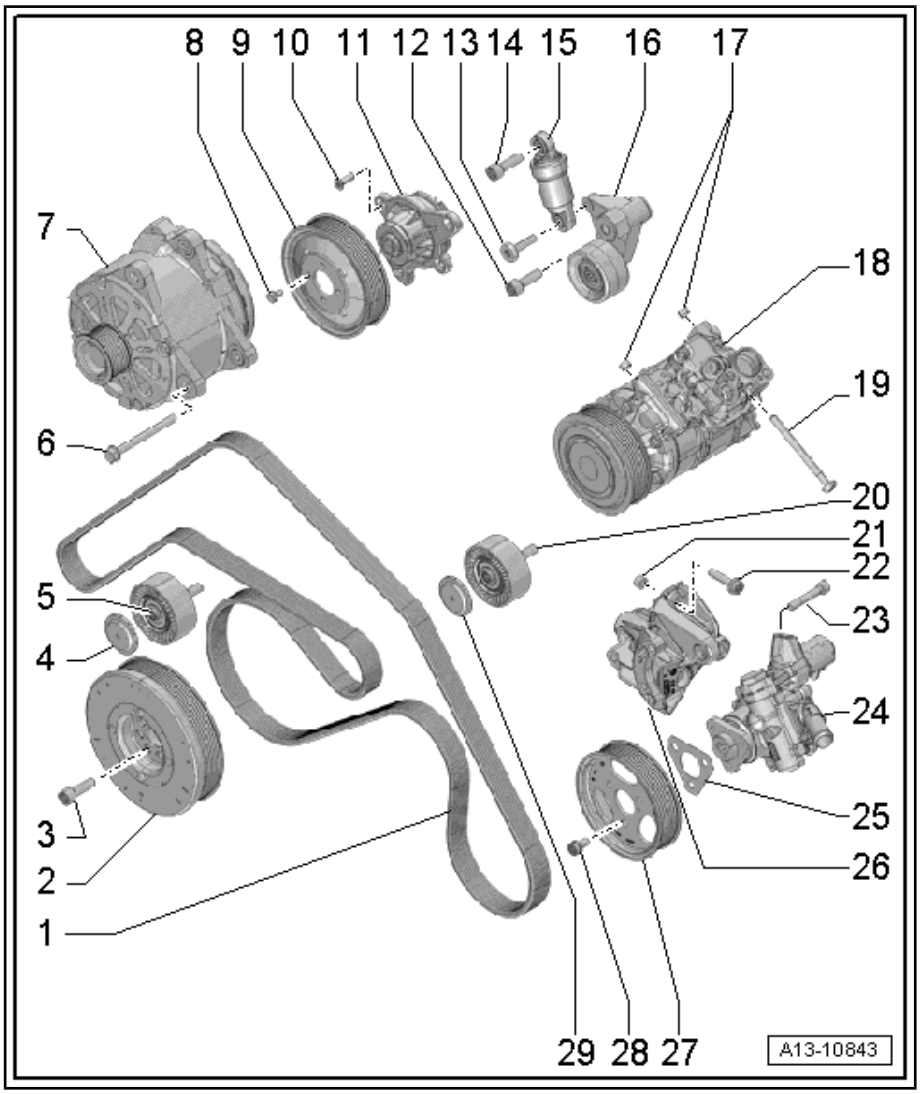

7 - Alternator

- ❑ Removing and installing ⇒ Electrical system; Rep. gr. 27 ; Alternator; Removing and installing alternator

8 - Bolt

- ❑ Tightening torque ⇒ Item 3 (page 196)

9 - Poly V-belt pulley

- ❑ For coolant pump

10 - Bolt

- ❑ Tightening torque ⇒ Item 4 (page 196)

11 - Coolant pump

- ❑ Removing and installing ⇒ page 198

12 - Bolt

- ❑ Renew
- ❑ 32 Nm + turn 90° further

13 - Bolt

- ❑ 23 Nm

14 - Bolt

- ❑ 23 Nm

15 - Tensioning spring

- ❑ For tensioning roller
- ❑ With hydraulic damper
- ❑ Installation position: lettering “TOP” faces upwards.

16 - Tensioner

- ❑ With relay lever

17 - Dowel sleeves

18 - Air conditioner compressor

- ❑ Removing and installing ⇒ Heating, air conditioning; Rep. gr. 87 ; Air conditioner compressor; Detaching and attaching air conditioner compressor at bracket

Protected by copyright. Copying for private or commercial purposes, in part or in whole, is not permitted unless authorised by AUDI AG. AUDI AG does not guarantee or accept any liability with respect to the correctness of information in this document. Copyright by AUDI AG.

19 - Bolt

- ❑ Tightening torque ⇒ Heating, air conditioning; Rep. gr. 87 ; Air conditioner compressor; Exploded view - air conditioner compressor drive unit

20 - Idler roller (left-side)

- ❑ For poly V-belt
- ❑ 32 Nm

21 - Dowel sleeve

22 - Bolt

- ❑ 40 Nm

23 - Bolt

- ❑ Tightening torque ⇒ Running gear, axles, steering; Rep. gr. 48 ; Hydraulic power steering; Exploded view - power steering pump

24 - Power steering pump

- ❑ Removing and installing ⇒ Running gear, axles, steering; Rep. gr. 48 ; Hydraulic power steering; Removing and installing power steering pump
- ❑ After replacing, check alignment of pulleys on power steering pump and air conditioner compressor ⇒ page 68

25 - Shim

- ❑ For alignment of poly V-belt pulleys ⇒ page 68
- ❑ Different thicknesses ⇒ Electronic parts catalogue

26 - Bracket for power steering pump

- ❑ Different versions available; for allocation refer to ⇒ Electronic parts catalogue
- ❑ Removing and installing ⇒ page 70
- ❑ Pay attention to dowel sleeves when installing
- ❑ After renewing, check alignment of poly V-belt pulleys on power steering pump and air conditioner compressor ⇒ page 68

27 - Poly V-belt pulley

- ❑ For power steering pump

28 - Bolt

- ❑ Tightening torque ⇒ Running gear, axles, steering; Rep. gr. 48 ; Hydraulic power steering; Exploded view - power steering pump

29 - Cap

- ❑ For idler roller (left-side)

Protected by copyright. Copying for private or commercial purposes, in part or in whole, is not permitted unless authorised by AUDI AG. AUDI AG does not guarantee or accept any liability with respect to the correctness of information in this document. Copyright by AUDI AG.

1.1.2 Exploded view - poly V-belt, vehicles from model year 2014 onwards

1 - Poly V-belt

- ❑ Check for wear
- ❑ Before removing, mark direction of rotation with chalk or felt-tip pen
- ❑ Removing and installing ⇒ page 66
- ❑ Do not kink
- ❑ When installing, make sure it is properly seated on pulleys

2 - Vibration damper

- ❑ With poly V-belt pulley
- ❑ Version fitted in vehicle may differ from illustration
- ❑ Removing and installing ⇒ page 69

3 - Bolt

- ❑ Renew
- ❑ 40 Nm + turn 90° further

4 - Cap

- ❑ For idler roller

5 - Idler roller (right-side)

- ❑ For poly V-belt
- ❑ 32 Nm

6 - Bolt

- ❑ Tightening torque ⇒ Electrical system; Rep. gr. 27 ; Alternator; Exploded view - alternator

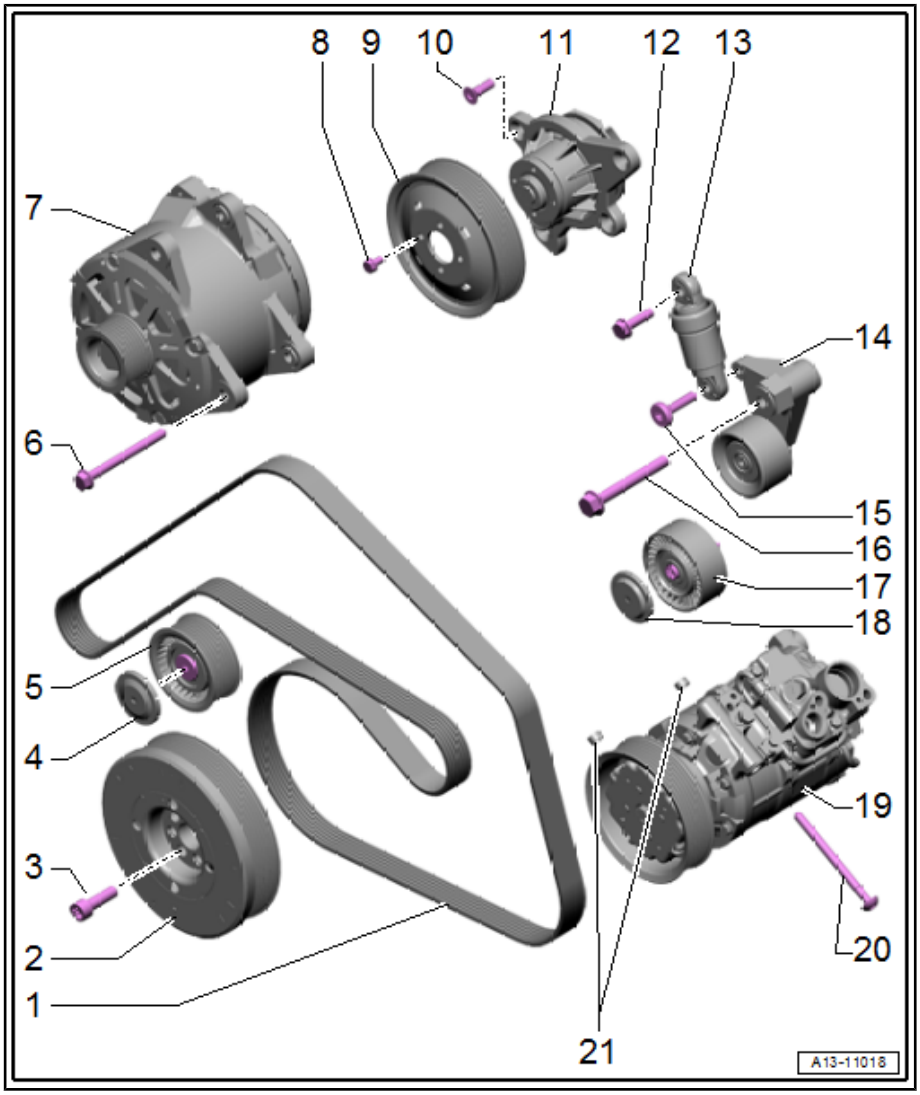

7 - Alternator

- ❑ Removing and installing ⇒ Electrical system; Rep. gr. 27 ; Alternator; Removing and installing alternator

8 - Bolt

- ❑ Tightening torque ⇒ Item 3 (page 196)

9 - Poly V-belt pulley

- ❑ For coolant pump

10 - Bolt

- ❑ Tightening torque ⇒ Item 4 (page 196)

11 - Coolant pump

- ❑ Removing and installing ⇒ page 198

Protected by copyright. Copying for private or commercial purposes, in part or in whole, is not permitted unless authorised by AUDI AG. AUDI AG does not guarantee or accept any liability with respect to the correctness of information in this document. Copyright by AUDI AG.

12 - Bolt

- ❑ 23 Nm

13 - Tensioning spring

- ❑ For tensioning roller
- ❑ With hydraulic damper
- ❑ Installation position: lettering “TOP” faces upwards.

14 - Tensioner

- ❑ With relay lever

15 - Bolt

- ❑ 23 Nm

16 - Bolt

- ❑ Renew
- ❑ 32 Nm + turn 90° further

17 - Idler roller (left-side)

- ❑ For poly V-belt
- ❑ 32 Nm

18 - Cap

- ❑ For idler roller (left-side)

19 - Air conditioner compressor

- ❑ Removing and installing ⇒ Heating, air conditioning; Rep. gr. 87 ; Air conditioner compressor; Detaching and attaching air conditioner compressor at bracket

20 - Bolt

- ❑ Tightening torque ⇒ Heating, air conditioning; Rep. gr. 87 ; Air conditioner compressor; Exploded view - air conditioner compressor drive unit

21 - Dowel sleeves

1.2 Removing and installing poly V-belt

Removing

– Remove noise insulation (front) -1- ⇒ General body repairs, exterior; Rep. gr. 66 ; Noise insulation; Removing and installing noise insulation .

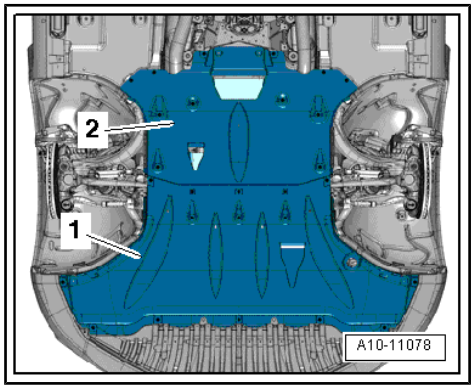

– Unplug electrical connector -arrow- for oil pressure switch - F22- .

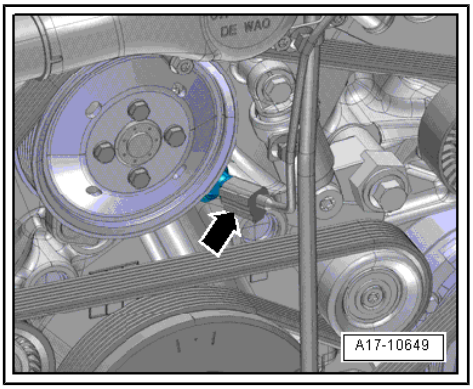

Caution

If a used belt runs in the opposite direction when it is refitted, this can cause breakage.

- *Before removing, mark direction of rotation of poly V-belt with chalk or felt-tip pen for re-installation.*

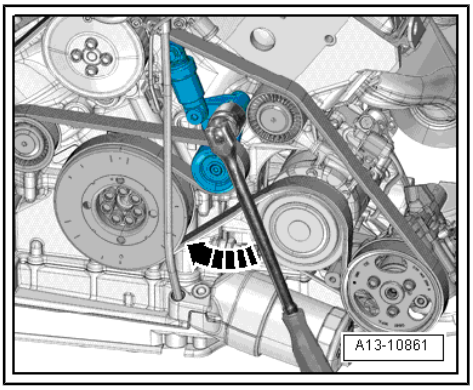

– To slacken poly V-belt turn tensioner in clockwise direction -arrow-.

– Remove poly V-belt and release tensioner.

Note

Illustration shows vehicle version up to model year 2013.

Installing

Installation is carried out in the reverse order; note the following:

– For vehicles up to model year 2013: After renewing certain components, it is necessary to check the alignment of the poly V-belt pulleys for the power steering pump and air conditioner compressor before fitting the poly V-belt ⇒ page 68 .

– First fit the poly V-belt on the poly V-belt pulleys of the vibration damper, then on the remaining pulleys and finally on the tensioner.

Vehicles up to model year 2013:

1 - Alternator

2 - Poly V-belt

3 - Coolant pump

4 - Tensioner

5 - Idler roller (left-side)

6 - Power steering pump

7 - Air conditioner compressor

8 - Vibration damper

9 - Idler roller (right-side)

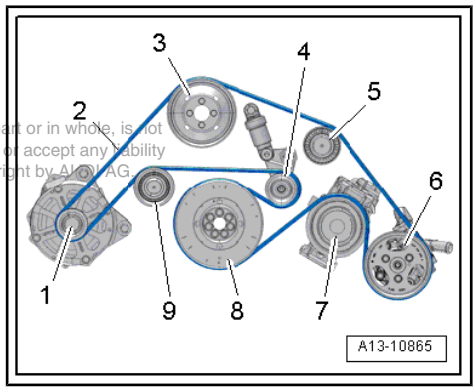

Protected by copyright. Copying for private or commercial purposes, in part or in whole, is not permitted unless authorised by AUDI AG. AUDI AG does not guarantee or accept any liability with respect to the correctness of information in this document. Copyright by AUDI AG.

Vehicles from model year 2014 onwards:

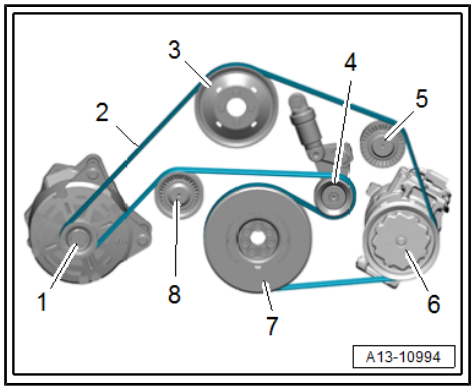

1 - Alternator

2 - Poly V-belt

3 - Coolant pump

4 - Tensioner

5 - Idler roller (left-side)

6 - Air conditioner compressor

7 - Vibration damper

8 - Idler roller (right-side)

All vehicles (continued):

– Start engine and check that belt runs properly.

Tightening torques

♦ ⇒ General body repairs, exterior; Rep. gr. 66 ; Noise insulation; Exploded view - noise insulation

1.3 Checking alignment of pulley

Caution

Risk of damage to poly V-belt.

- *After renewing any of the following components, it is necessary to check the alignment of the poly V-belt pulleys.*
- *Power steering pump*
- *Bracket for power steering pump*
- *Air conditioner compressor*
- *Sump (top section)*

Special tools and workshop equipment required

♦ Alignment gauge - 3201-

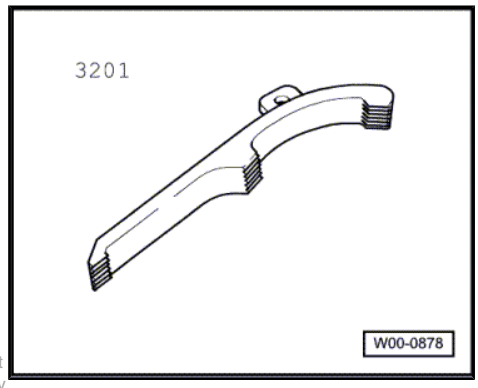

Protected by copyright. Copying for private or commercial purposes, in part or in whole, is not permitted unless authorised by AUDI AG. AUDI AG does not guarantee or accept any liability with respect to the correctness of information in this document. Copyright by AUDI AG.

Procedure

– Remove poly V-belt ⇒ page 66 .

– Apply alignment gauge - 3201- onto poly V-belt pulley for air conditioner compressor.

– Determine centre position of shaft for power steering pump by moving pump shaft back and forth axially.

• When in the centre position, the poly V-belt pulley for the power steering pump must align with the poly V-belt pulley for the air conditioner compressor.

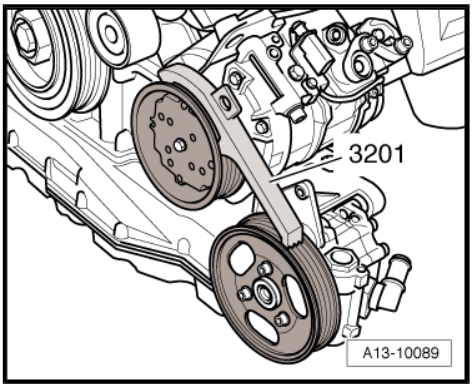

If the two poly V-belt pulleys are not in line:

– Remove bolts -arrows- for poly V-belt pulley for power steering pump.

• Installation position: lug -1- on the poly V-belt pulley faces the direction of travel.

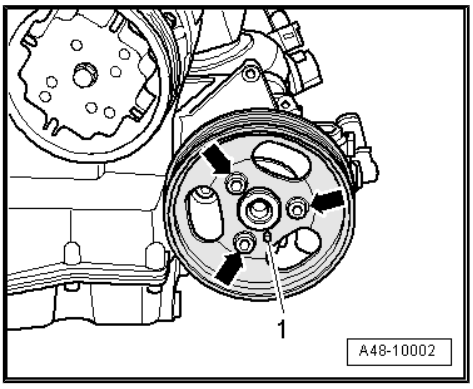

– Use shims -3- of various thicknesses to align pulley -2- for power steering pump with pulley for air conditioner compressor. For part number refer to ⇒ Electronic parts catalogue .

– After securing pulleys, check alignment using alignment gauge - 3201- .

– Repeat adjustment if necessary.

– Install poly V-belt ⇒ page 66 .

Tightening torques

♦ ⇒ “1.1.1 Exploded view - poly V-belt, vehicles up to model year 2013”, page 63

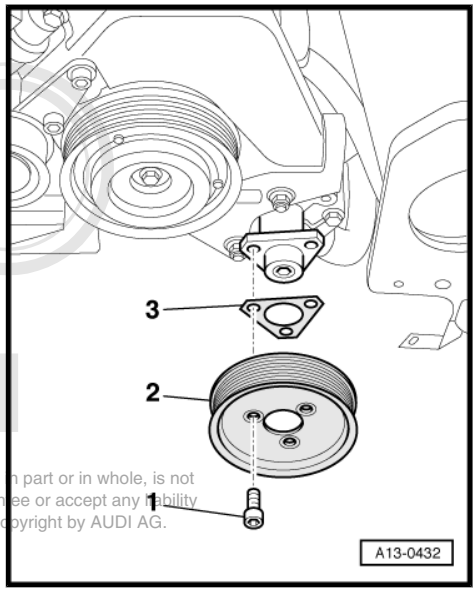

Protected by copyright. Copying for private or commercial purposes, in part or in whole, is not permitted unless authorised by AUDI AG. AUDI AG does not guarantee or accept any liability with respect to the correctness of information in this document. Copyright by AUDI AG.

1.4 Removing and installing vibration damper

Special tools and workshop equipment required

- Counterhold tool - T10172- with pins -T10172/1-

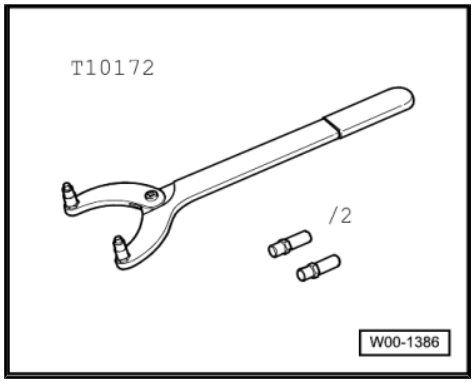

Removing

– Remove poly V-belt ⇒ page 66 .

– Loosen bolts -arrow- for vibration damper.

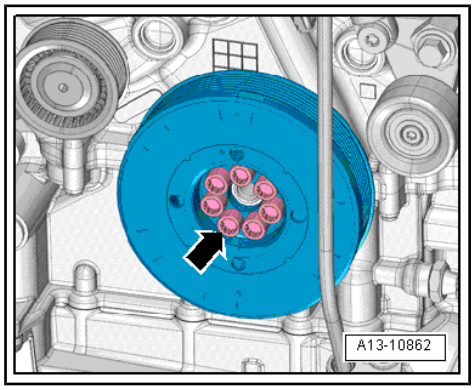

– To do so, apply counterhold tool - T10172- with pins - T10172/1- to vibration damper for support.

– Remove vibration damper.

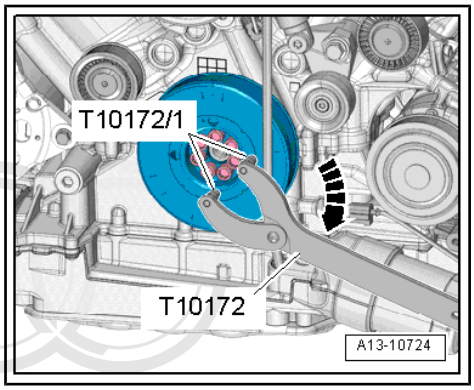

Note

Disregard -arrow-.

Installing

Installation is carried out in the reverse order; note the following:

Note

- *Renew the bolts tightened with specified tightening angle.*
- *The contact surfaces between vibration damper and crankshaft must be free of oil.*
- *Do not additionally lubricate bolts for vibration damper.*

Protected by copyright. Copying for private or commercial purposes, in part or in whole, is not permitted unless authorised by AUDI AG. AUDI AG does not guarantee or accept any liability with respect to the correctness of information in this document. Copyright by AUDI AG.

– Install poly V-belt ⇒ page 66 .

Tightening torques

- ⇒ “1.1 Exploded view - poly V-belt drive”, page 63

1.5 Removing and installing bracket for ancillaries

- Tapered mounting pin - VAS 6131/10-2- and -6131/11-1-

- Engine and gearbox jack - V.A.G 1383 A-

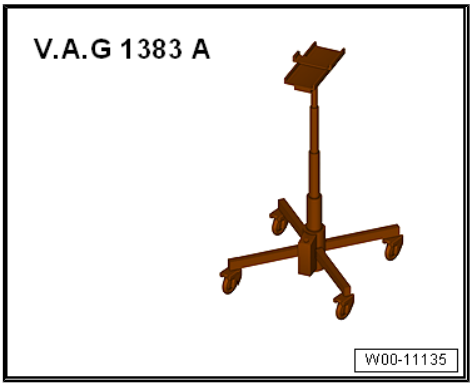

- Counterhold tool - T10172- with pins -T10172/1-

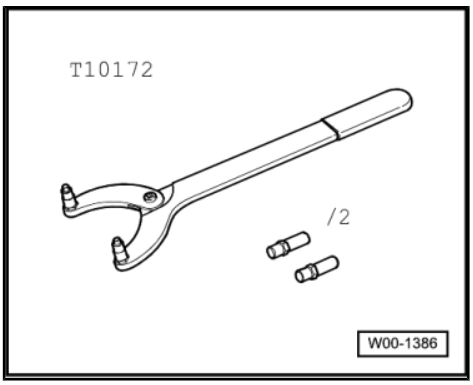

- Gearbox support - T10337-

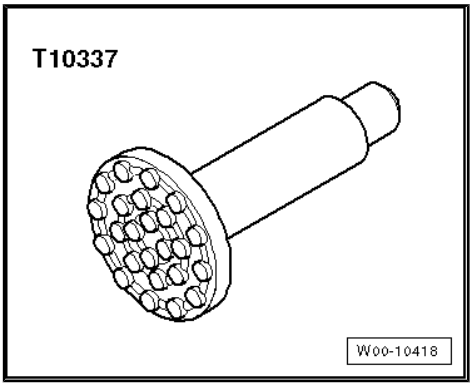

Preparing gearbox support - T10337- :

– Remove rubber overlay -1- from gearbox support - T10337- .
– If not already done, drill a hole in the centre ∅ = 10.2 mm -arrow-.
– Tap M12 thread into hole.

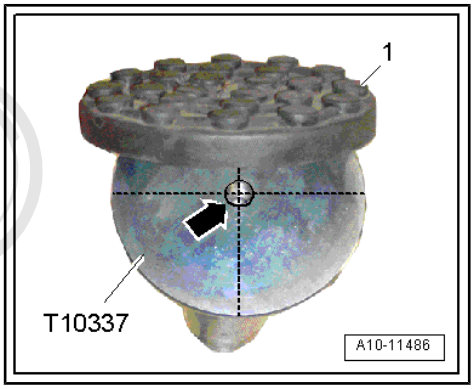

Protected by copyright. Copying for private or commercial purposes, in part or in whole, is not permitted unless authorised by AUDI AG. AUDI AG does not guarantee or accept any liability with respect to the correctness of information in this document. Copyright by AUDI AG.

Removing

– Remove noise insulation panels -1- and -2- ⇒ General body repairs, exterior; Rep. gr. 66 ; Noise insulation; Removing and installing noise insulation .

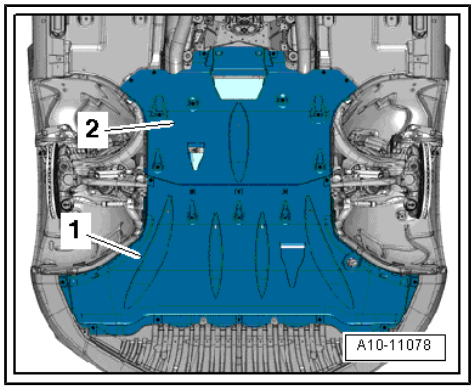

– To slacken poly V-belt turn tensioner in clockwise direction -arrow-.

– Remove poly V-belt from pulley for power steering pump and release tensioner.

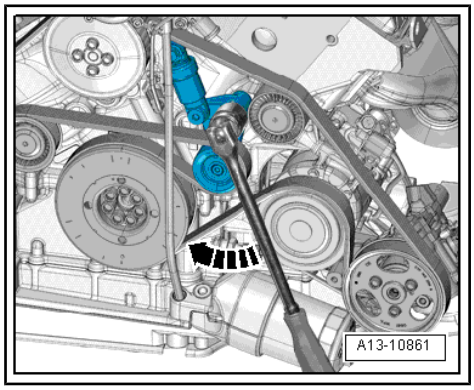

– Loosen bolts -arrows- for poly V-belt pulley for power steering pump (counterhold with counterhold tool - T10172- and pins - T10172/1-).

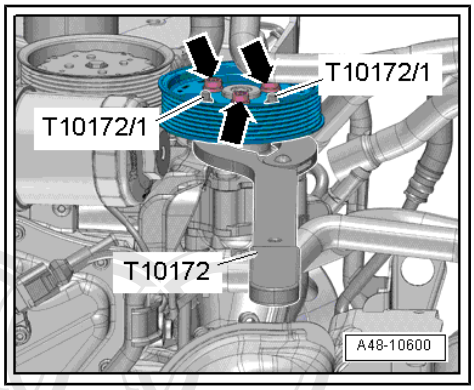

Vehicles without dynamic steering:

– Remove bolt -2-.

Note

Disregard -item 1-.

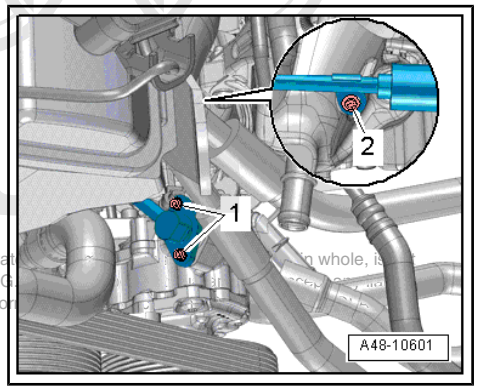

Protected by copyright. Copying for priva
permitted unless authorised by AUDI AG
with respect to the correctness of info

Vehicles with dynamic steering:

– Unplug electrical connector -2-.

– Remove bolt -3-.

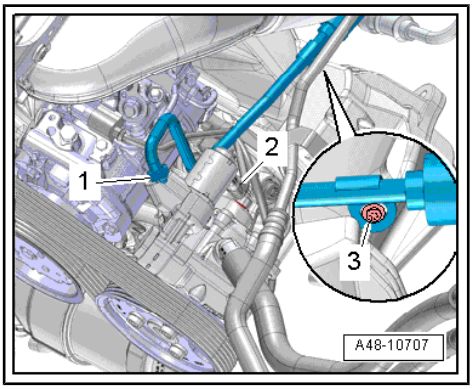

Note

Disregard -item 1-.

All vehicles (continued):

– Remove bolts -arrows-, detach power steering pump -1- from bracket and move clear to one side.

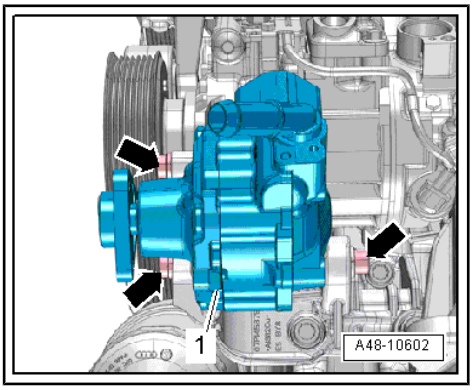

– Move clear electrical wiring harness -2-.

– Remove bolts -arrows-.

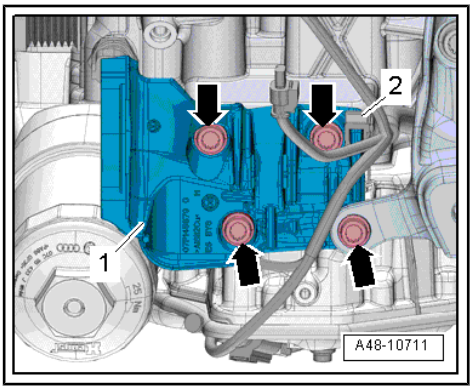

Note

- *Engine must be lifted slightly in order to remove bolt -bottom right arrow-.*
- *Disregard -item 1-.*

– Secure tapered mounting pin - VAS 6131/10-2- to gearbox support - T10337- .

– Attach the engine and gearbox jack - V.A.G 1383 A- to the engine as shown in the illustration and lift it as far as necessary to be able to remove the bolt.

– Detach bracket for power steering pump.

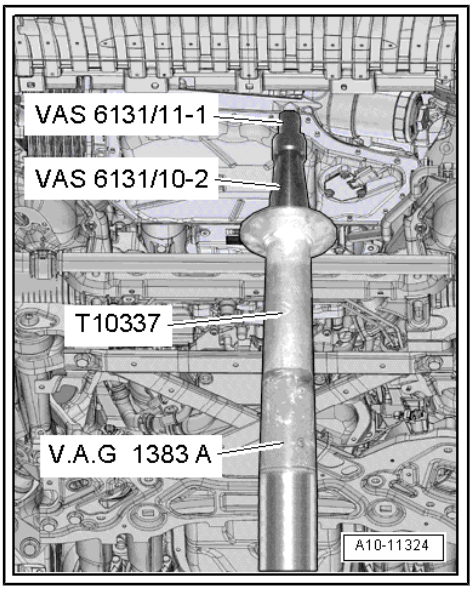

Protected by copyright. Copying for private or commercial purposes, in part or in whole, is not permitted unless authorised by AUDI AG. AUDI AG does not guarantee or accept any liability with respect to the correctness of information in this document. Copyright by AUDI AG.

Note

If it is not possible to remove the bracket for the power steering pump, push bush -1- to the left side with a screwdriver -arrow-.

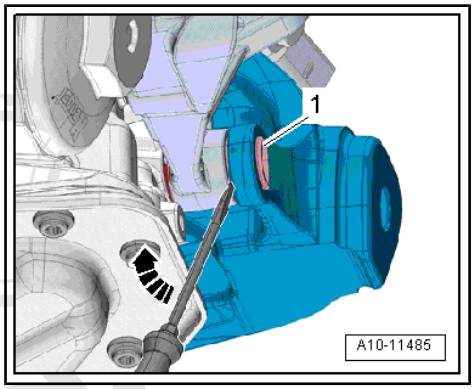

Installing

Installation is carried out in the reverse order; note the following:

– Check that dowel sleeves for bracket for power steering pump are inserted in cylinder block.

Tightening torques

- ⇒ "1.1.1 Exploded view - poly V-belt, vehicles up to model year 2013", page 63
- ⇒ General body repairs, exterior; Rep. gr. 66 ; Noise insulation; Exploded view - noise insulation

Protected by copyright. Copying for private or commercial purposes, in part or in whole, is not permitted unless authorised by AUDI AG. AUDI AG does not guarantee or accept any liability with respect to the correctness of information in this document. Copyright by AUDI AG.

1.6 Renewing crankshaft oil seal (pulley end)

Special tools and workshop equipment required

- Oil seal extractor - T40249-

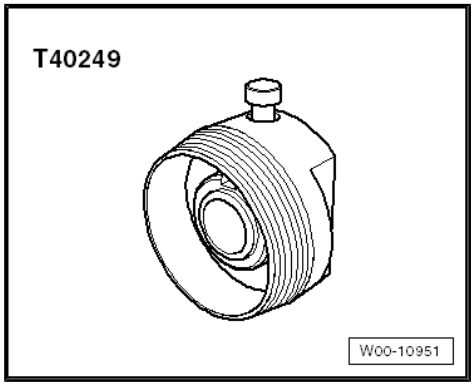

- Assembly tool - T40251-

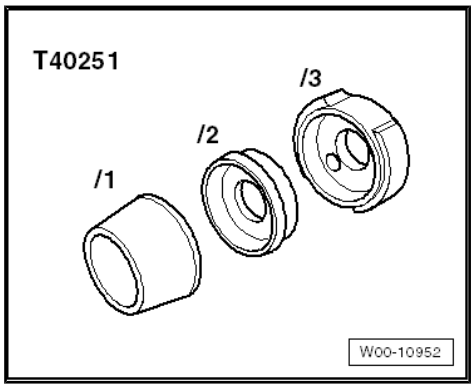

Procedure

– Remove vibration damper ⇒ page 69 .

– Screw inner section of oil seal extractor -T40249- out of outer section until inside is flush with outside of extractor.

– Fix inner section in place with knurled screw.

– Lubricate threaded head of oil seal extractor, place it in position and screw it into oil seal as far as possible (applying firm pressure).

– Loosen knurled screw and turn inner part against crankshaft until the oil seal is pulled out.

– Clamp flats of oil seal extractor in vice and use pliers to remove oil seal.

– Clean contact surface and sealing surface.

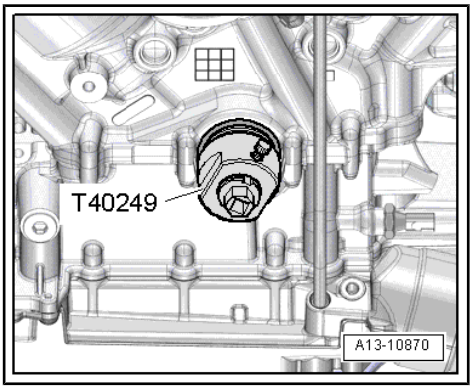

– Fit assembly aid -T40251/1- onto assembly sleeve -T40251/2- and slide oil seal -1- onto assembly sleeve.

– Detach assembly aid.

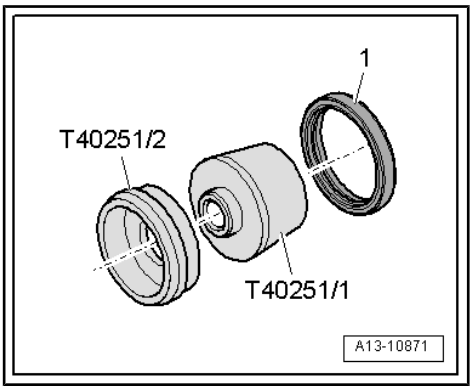

– Fit assembly sleeve -T40251/2- on crankshaft and slide oil seal -1- into sealing surface in cylinder block.

– Detach assembly sleeve -T40251/2- .

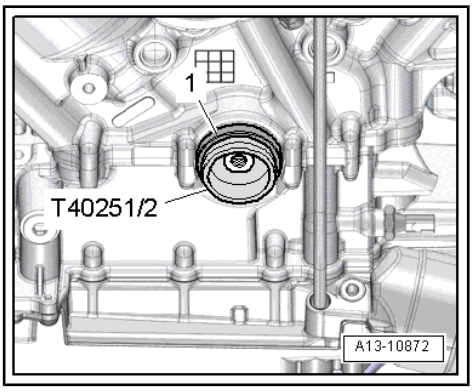

Protected by copyright. Copying for private or commercial purposes, in part or in whole, is not permitted unless authorised by AUDI AG. AUDI AG does not guarantee or accept any liability with respect to the correctness of information in this document. Copyright by AUDI AG.

– Apply press sleeve -T40251/3- to crankshaft using two bolts for vibration damper -arrows-.

– Initially hand-tighten bolts.

– Tighten bolts alternately, $^1/_2$ turn at a time, to press in oil seal onto stop.

Remaining installation steps are carried out in reverse sequence; note the following:

– Install vibration damper ⇒ page 69 .

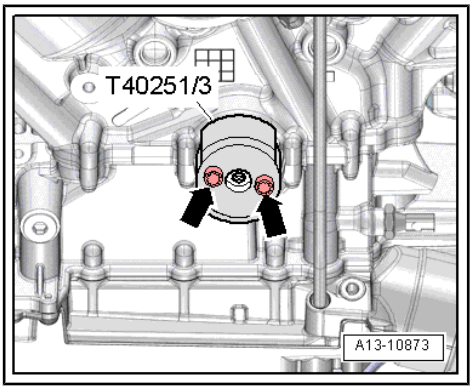

2 Cylinder block (gearbox end)

⇒ "2.1 Exploded view - cylinder block (gearbox end)", page 76
⇒ "2.2 Removing and installing drive plate", page 76
⇒ "2.3 Removing and installing sender wheel", page 78
⇒ "2.4 Checking sender wheel", page 78
⇒ "2.5 Renewing crankshaft oil seal (gearbox end)", page 79

2.1 Exploded view - cylinder block (gearbox end)

1 - Bolt
- ❑ Renew
- ❑ 60 Nm + turn 90° further

2 - Drive plate
- ❑ Check holes for torque converter for cracks and scoring
- ❑ Removing and installing ⇒ page 76

3 - Sender wheel
- ❑ For engine speed sender - G28-
- ❑ Removing and installing ⇒ page 78
- ❑ Checking ⇒ page 78

4 - Oil seal
- ❑ For crankshaft (gearbox end)
- ❑ Renewing ⇒ page 79

5 - Dowel pin

6 - Crankshaft

Protected by copyright. Copying for private or commercial purposes, in part or in
permitted unless authorised by AUDI AG. AUDI AG does not guarantee or accept a
with respect to the correctness of information in this document. Copyright by AUD

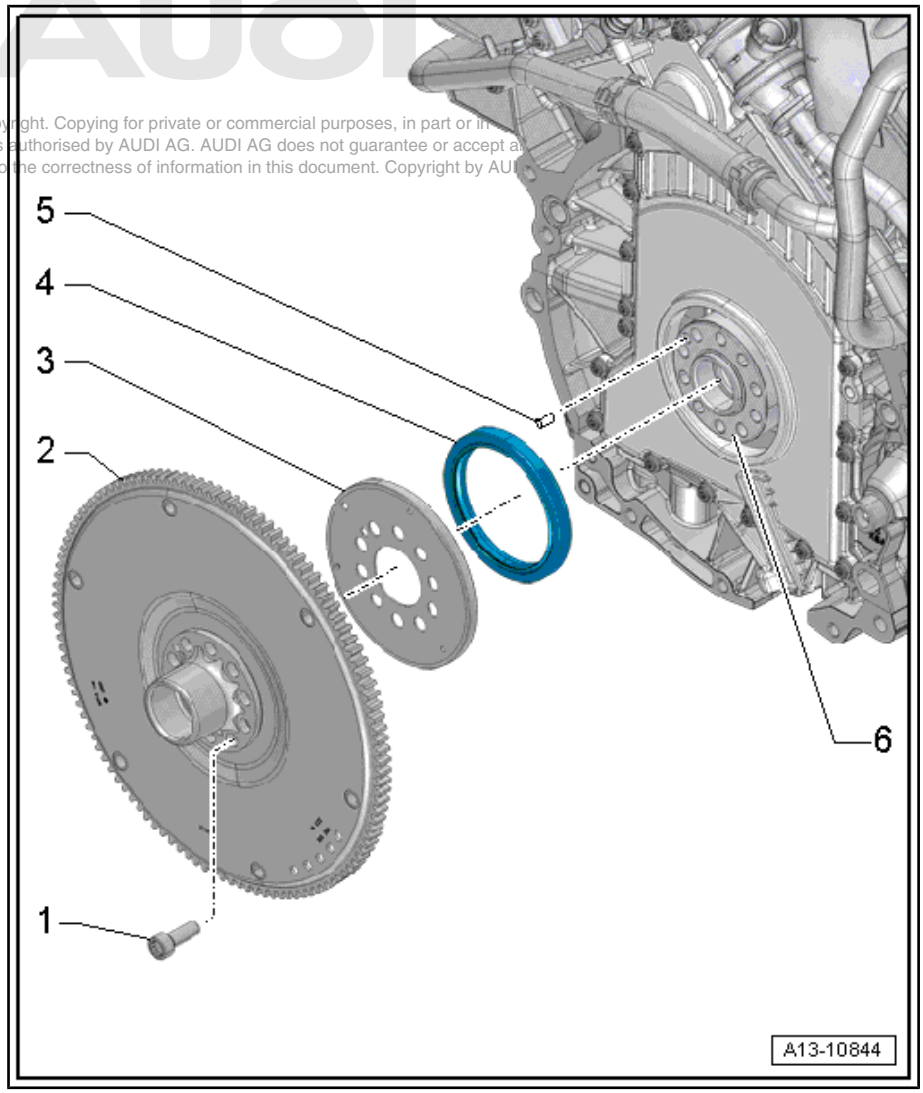

2.2 Removing and installing drive plate

Special tools and workshop equipment required

♦ Counterhold tool - T10172- with pins -T10172/1-

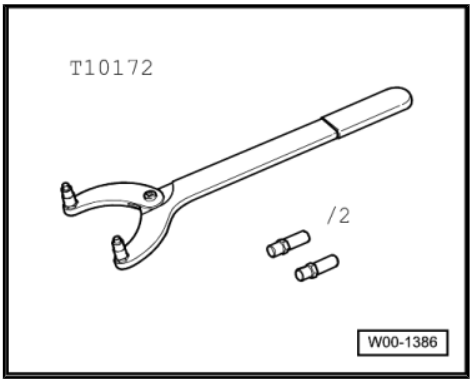

Removing

- Gearbox removed ⇒ Rep. gr. 37 ; Removing and installing gearbox; Removing gearbox .

> ⚠ **Caution**
>
> *Take care not to damage outer surface of bearing flange on drive plate.*
>
> ♦ *Use a multi-point socket bit with a length of at least 40 mm to slacken and tighten the drive plate bolts.*

– Loosen bolts -arrow- for drive plate.

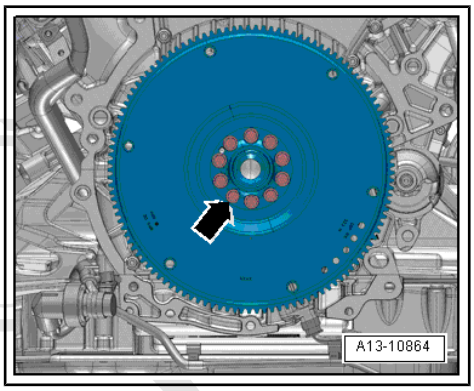

Protected by copyright. Copying for private or commercial purposes, in part or in whole, is not permitted unless authorised by AUDI AG. AUDI AG does not guarantee or accept any liability with respect to the correctness of information in this document. Copyright by AUDI AG.

– For this step a second mechanic must apply counterhold tool - T10172- with pins -T10172/1- to vibration damper for support.
– Remove bolts for drive plate and take off drive plate and sender wheel.

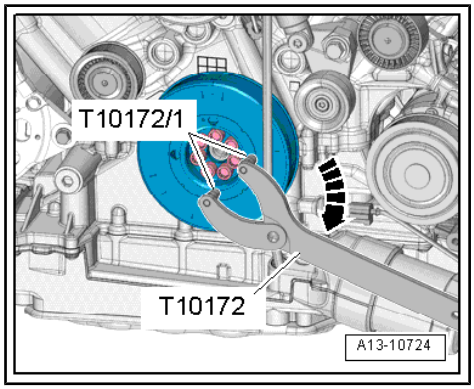

Note

Disregard -arrow-.

Installing

Installation is carried out in the reverse order; note the following:

Note

Renew the bolts tightened with specified tightening angle.

– Pay attention to dowel pin when installing drive plate.
– To tighten bolts, apply counterhold tool - T10172- with pins - T10172/1- to vibration damper for support.

Tightening torques

♦ ⇒ “2.1 Exploded view - cylinder block (gearbox end)”, page 76

2.3 Removing and installing sender wheel

Copyright by AUDI AG. Copying for private or commercial purposes, in part or in whole, is not permitted unless authorised by AUDI AG. AUDI AG does not guarantee or accept any liability with respect to the correctness of information in this document. Copyright by AUDI AG.

Removing

• Gearbox removed ⇒ Rep. gr. 37 ; Removing and installing gearbox; Removing gearbox .
– Remove drive plate ⇒ page 76 .
– Detach sender wheel -arrow-.

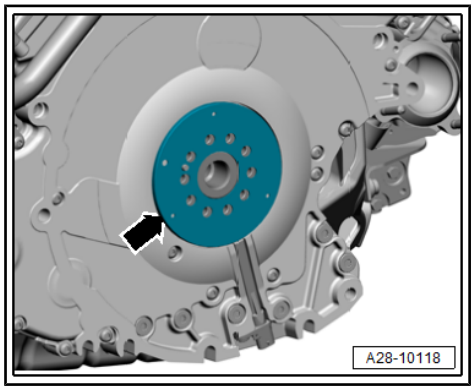

Installing

Installation is carried out in the reverse order; note the following:

– Install drive plate ⇒ page 76 .
– After renewing sender wheel, misfire adaptions must be reset. To do so, select “01 - Reset adaptions misfires” in `Guided Functions` mode of ⇒ Vehicle diagnostic tester.

2.4 Checking sender wheel

Special tools and workshop equipment required

♦ Magnetic lens - T10473-

Procedure

• Sender wheel removed

– Check whole circumference of sender wheel using magnetic lens - T10473- as shown in illustration.

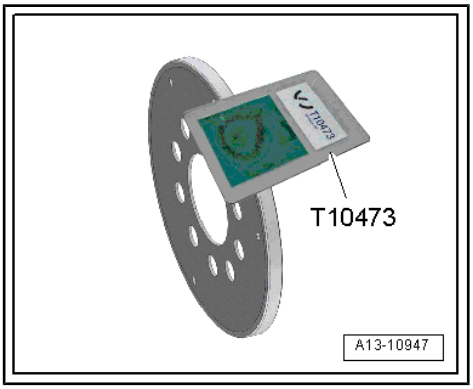

Inspection image of sender wheel

A - Sender wheel OK

B - Sender wheel defective

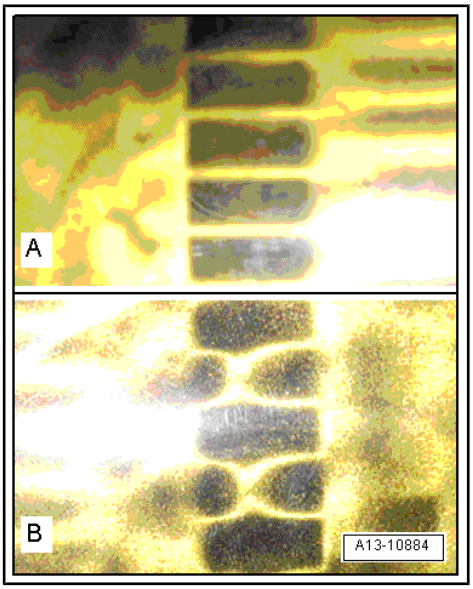

Audi

2.5 Renewing crankshaft oil seal (gearbox end)

Protected by copyright. Copying or distribution is not permitted unless authorised by AUDI AG. AUDI AG does not guarantee or accept any liability with respect to the correctness of information in this document. Copyright by AUDI AG.

Special tools and workshop equipment required

♦ Fitting tool - T10122-

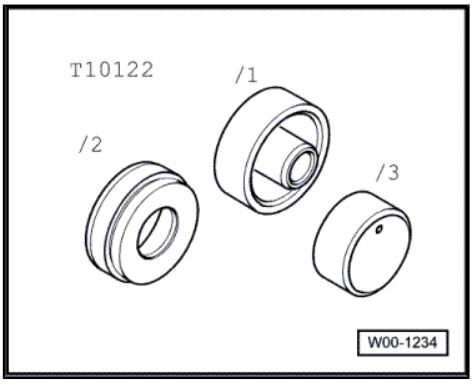

♦ Extractor tool - T20143/2-

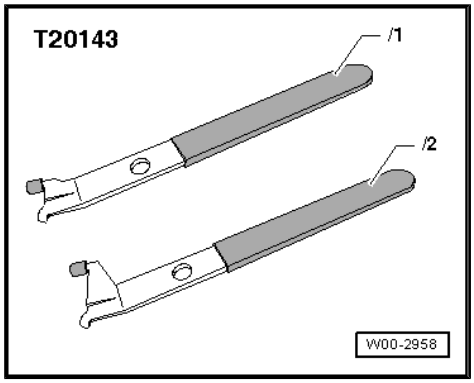

Procedure

- Gearbox removed ⇒ Rep. gr. 37 ; Removing and installing gearbox; Removing gearbox .

– Remove drive plate ⇒ page 76 .

– Pry out oil seal using extractor tool -T20143/2- .

– Clean contact surface and sealing surface.

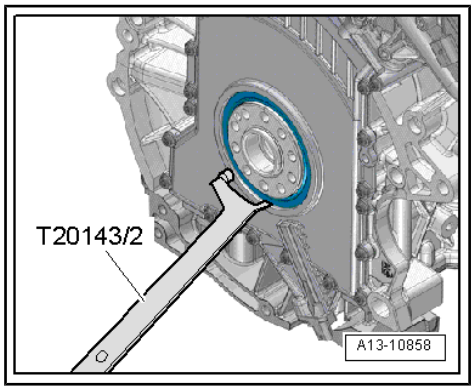

– Fit assembly aid -T10122/1- onto assembly sleeve -T10122/2- and slide oil seal -A- onto assembly sleeve.

– Detach assembly aid.

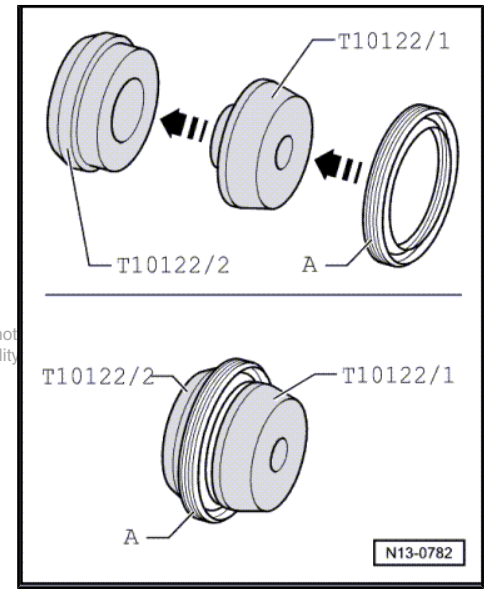

Protected by copyright. Copying for private or commercial purposes, in part or in whole, is not permitted unless authorised by AUDI AG. AUDI AG does not guarantee or accept any liability with respect to the correctness of information in this document. Copyright by AUDI AG.

– Fit assembly sleeve -T10122/2- with oil seal -1- onto crankshaft.

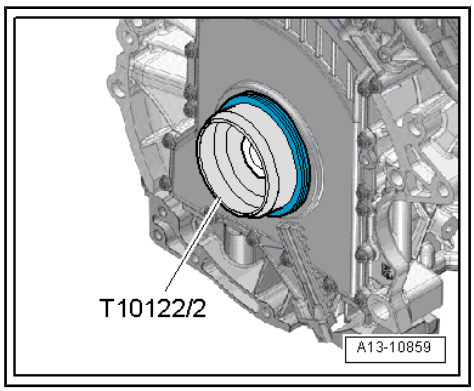

– Drive in oil seal uniformly until flush all round using thrust piece -T10122/4- .

– Install drive plate ⇒ page 76 .

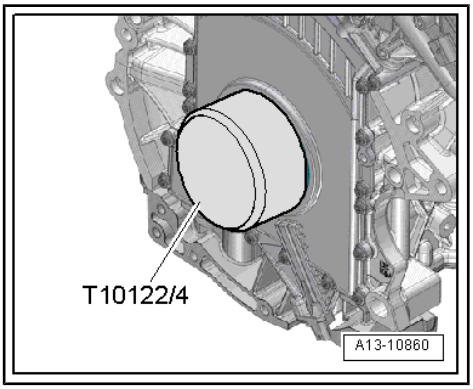

Protected by copyright. Copying for private or commercial purposes, in part or in whole, is not permitted unless authorised by AUDI AG. AUDI AG does not guarantee or accept any liability with respect to the correctness of information in this document. Copyright by AUDI AG.

15 – Cylinder head, valve gear

1 Timing chain cover

⇒ "1.1 Exploded view - timing chain cover", page 82
⇒ "1.2 Renewing seals for studs", page 84
⇒ "1.3 Removing and installing timing chain cover", page 85

1.1 Exploded view - timing chain cover

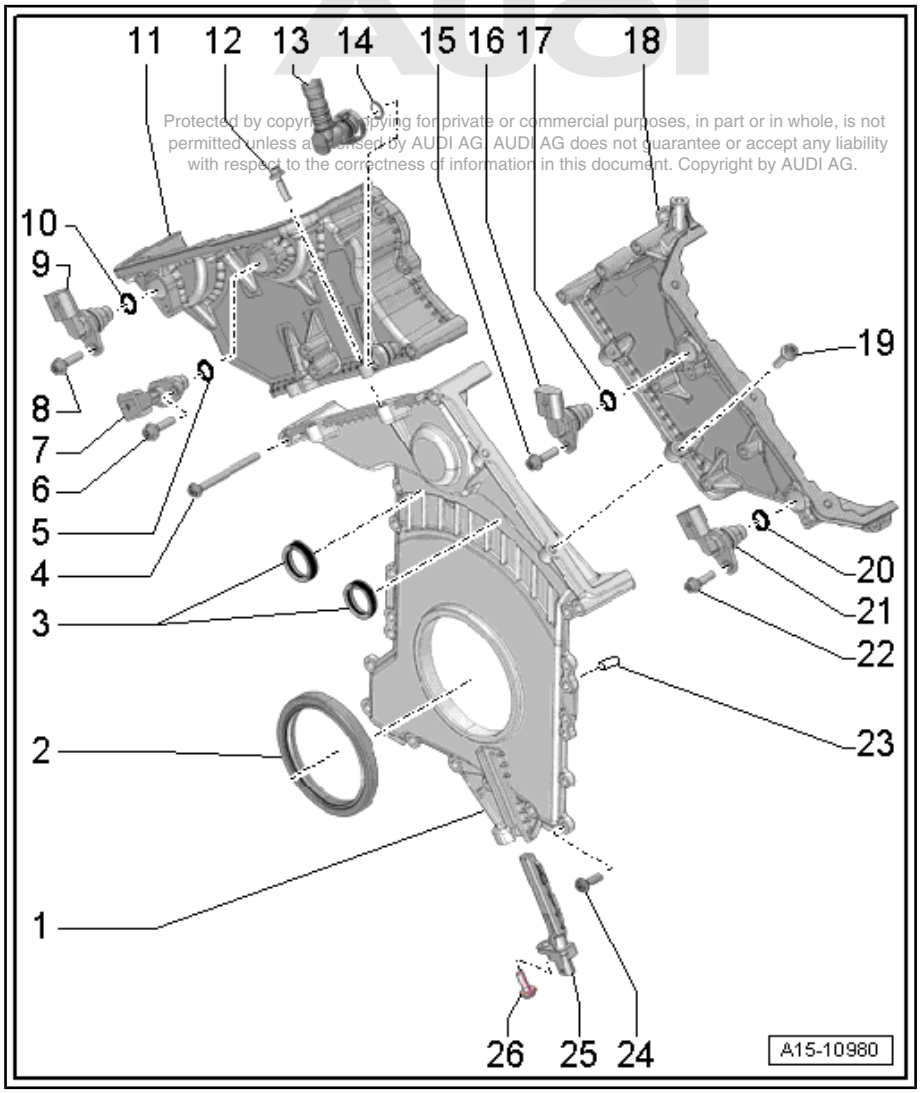

Protected by copyright. Copying for private or commercial purposes, in part or in whole, is not permitted unless authorised by AUDI AG. AUDI AG does not guarantee or accept any liability with respect to the correctness of information in this document. Copyright by AUDI AG.

1 - Timing chain cover (bottom)
- ❑ Removing and installing ⇒ page 89

2 - Oil seal
- ❑ For crankshaft (gearbox end)
- ❑ Renewing ⇒ page 79

3 - Seals
- ❑ For studs
- ❑ Renewing ⇒ page 84

4 - Bolt
- ❑ Tightening torque and sequence ⇒ page 84

5 - O-ring
- ❑ Renew

6 - Bolt
- ❑ Tightening torque ⇒ Item 5 (page 312)

7 - Hall sender 2 - G163-
- ❑ For inlet camshaft, cylinder bank 2 (left-side)
- ❑ Removing and installing ⇒ page 316

8 - Bolt
- ❑ Tightening torque ⇒ Item 10 (page 313)

9 - Hall sender 4 - G301-
- ❑ For exhaust camshaft, cylinder bank 2 (left-side)
- ❑ With heat insulation sleeve
- ❑ Removing and installing ⇒ page 316

10 - O-ring
- ❑ Renew

11 - Timing chain cover (left-side)
- ❑ Removing and installing ⇒ page 85

12 - Bolt
- ❑ Tightening torque and sequence ⇒ page 83

13 - Oil return line

14 - O-ring

- ❑ Renew

15 - Bolt

- ❑ Tightening torque ⇒ Item 5 (page 312)

16 - Hall sender - G40-

- ❑ For inlet camshaft, cylinder bank 1 (right-side)
- ❑ Removing and installing ⇒ page 316

17 - O-ring

- ❑ Renew

18 - Timing chain cover (right-side)

- ❑ Removing and installing ⇒ page 85

19 - Bolt

- ❑ Tightening torque and sequence ⇒ page 84

20 - O-ring

- ❑ Renew

21 - Hall sender 3 - G300-

- ❑ For exhaust camshaft, cylinder bank 1 (right-side)
- ❑ With heat insulation sleeve
- ❑ Removing and installing ⇒ page 316

22 - Bolt

- ❑ Tightening torque ⇒ Item 10 (page 313)

23 - Dowel sleeve

- ❑ 2x

24 - Bolt

- ❑ Tightening torque and sequence ⇒ page 84

25 - Engine speed sender - G28-

- ❑ Removing and installing ⇒ page 317

26 - Bolt

- ❑ Tightening torque ⇒ Item 14 (page 313)

Timing chain cover (left-side) - tightening torque and sequence

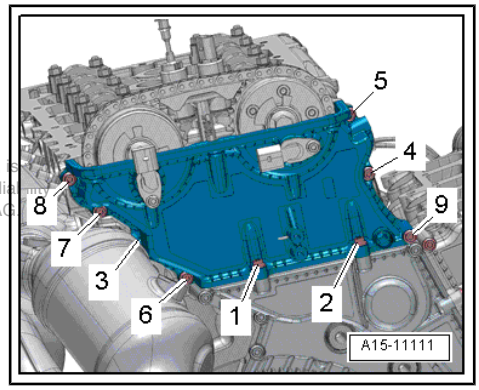

Note

Renew the bolts tightened with specified tightening angle.

Copyright by AUDI AG. ... part or in whole, is not permitted unless authorised by AUDI AG. AUDI AG does not guarantee or accept any liability with respect to the correctness of information in this document. Copyright by AUDI AG.

– Tighten bolts in 3 stages as follows:

Stage	Bolts	Tightening torque/angle specification
1.	-1 … 9-	4 Nm
2.	-1 … 8-	Turn 45° further
3.	-9-	Turn 180° further

Timing chain cover (right-side) - tightening torque and sequence

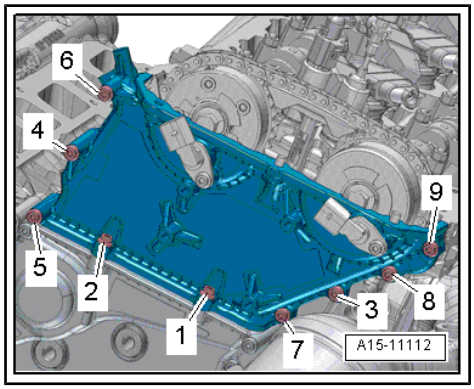

Note

Renew the bolts tightened with specified tightening angle.

– Tighten bolts in 3 stages as follows:

Stage	Bolts	Tightening torque/angle specification
1.	-1 … 9-	4 Nm
2.	-1 … 3- and -7 … 9-	Turn 45° further
3.	-4 … 6-	Turn 180° further

Timing chain cover (bottom) - tightening torque and sequence

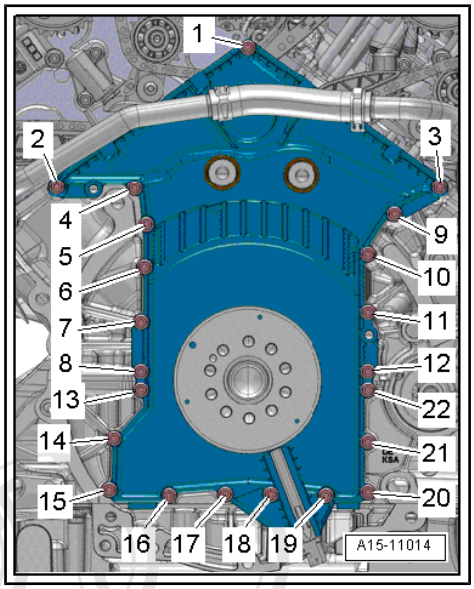

Note

Renew the bolts tightened with specified tightening angle.

– Tighten bolts in 3 stages as follows:

Stage	Bolts	Tightening torque/angle specification
1.	-1 … 22-	4 Nm
2.	-1 … 3-	Turn 180° further
3.	-4 … 22-	Turn 45° further

1.2 Renewing seals for studs

Special tools and workshop equipment required

- Extractor tool -T20143 A/1-

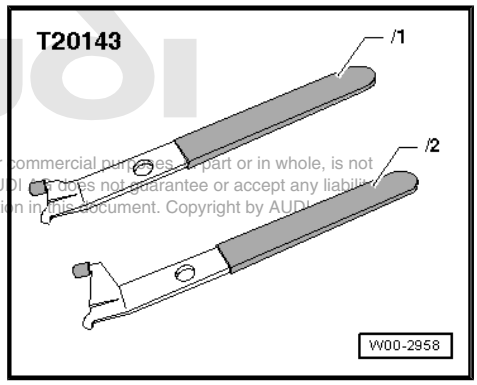

Protected by copyright. Copying for private or commercial purposes, in part or in whole, is not permitted unless authorised by AUDI AG. AUDI AG does not guarantee or accept any liability with respect to the correctness of information in this document. Copyright by AUDI AG.

Procedure

- Gearbox removed ⇒ Rep. gr. 37 ; Removing and installing gearbox; Removing gearbox .

– Remove drive plate ⇒ page 76 .

– Pry out seals -1- using extractor tool - T20143 A/1- .

– Clean surfaces; they must be free of oil and grease.

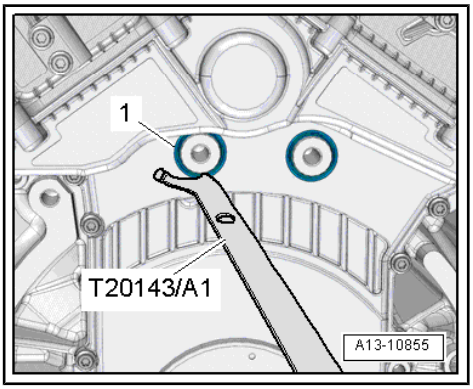

– Carefully drive in seals using 24 mm socket -item 1-, ensuring they are flush.

– Install drive plate ⇒ page 76 .

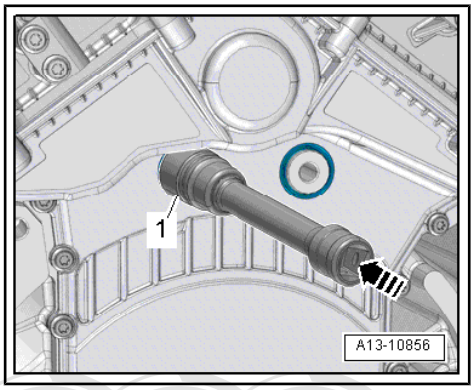

1.3 Removing and installing timing chain cover

⇒ "1.3.1 Removing and installing timing chain covers (left/right)", page 85

⇒ "1.3.2 Removing and installing timing chain cover (bottom)", page 89

1.3.1 Removing and installing timing chain covers (left/right)

Special tools and workshop equipment required

- ♦ Electric drill with plastic brush
- ♦ Safety goggles
- ♦ Sealant ⇒ Electronic parts catalogue

Protected by copyright. Copying for private or commercial purposes, in part or in whole, is not permitted unless authorised by AUDI AG. AUDI AG does not guarantee or accept any liability with respect to the correctness of information in this document. Copyright by AUDI AG.

Removing

Note

Fit all heat insulation sleeves in the original position when installing.

Timing chain cover (left-side):

– Remove coolant pipe (rear left) ⇒ page 216 .

– Remove air cleaner housing (left-side) ⇒ page 245 .

– Remove Lambda probe 4 - G286- ⇒ page 276 .

– Unscrew bolts -1 and 3- and detach combination valve (left-side) with secondary air pipe.

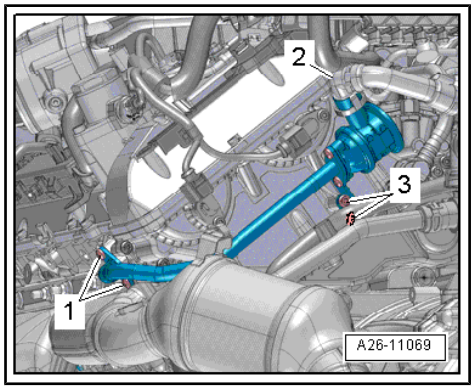

Note

Disregard -item 2-.

– Detach heat shield sleeve.

– Unplug electrical connectors -2- for Hall sender 2 - G163- and -1- for Hall sender 4 - G301- .

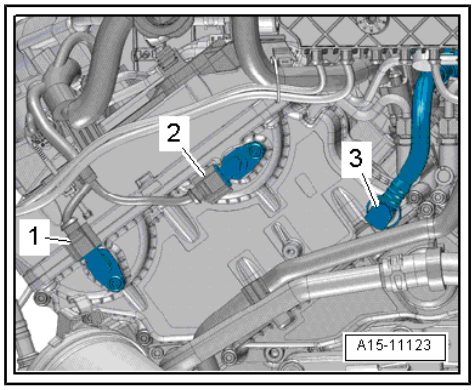

Note

Place a cloth underneath to catch escaping engine oil.

– Press release tabs and disconnect oil return hose -3-.

– Remove cylinder head cover (left-side) ⇒ page 127 .

– Slacken and remove bolts in the sequence: -9 ... 1-.

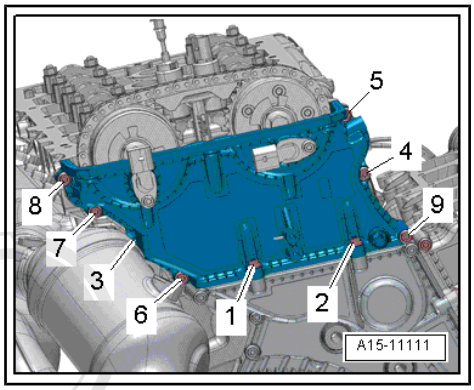

Timing chain cover (right-side):

– Remove secondary air pump motor -V101- / -V189- with bracket ⇒ page 296 .

– Remove Lambda probe 2 - G108- ⇒ page 275 .

– Unscrew bolts -2 and 3- and detach combination valve (left-side) with secondary air pipe.

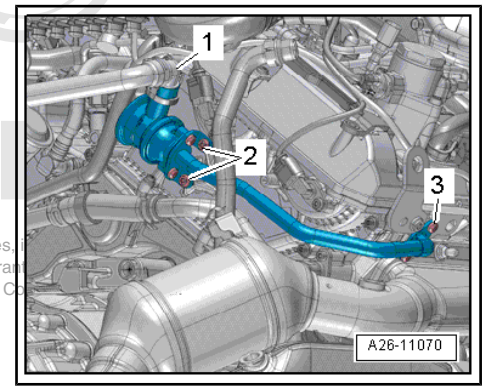

Protected by copyright. Copying for private or commercial purposes, permitted unless authorised by AUDI AG. AUDI AG does not guaran with respect to the correctness of information in this document. Co

Note

Disregard -item 1-.

– Remove bolt -1- for coolant pipe (rear right).
– Detach heat shield sleeve.
– Unplug electrical connectors -2- for Hall sender - G40- and -3- for Hall sender 3 - G300- .
– Remove cylinder head cover (right-side) ⇒ page 127 .

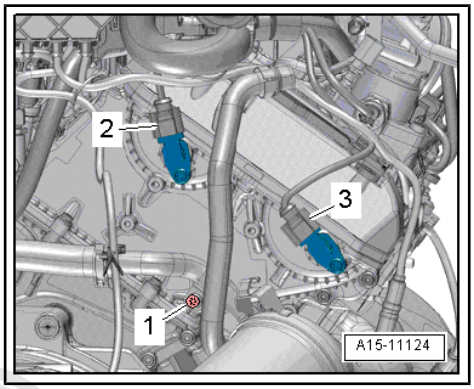

– Slacken and remove bolts in the sequence: -9 ... 1-.

Continuation for both sides:

– Carefully release timing chain covers from bonded joints and remove covers.

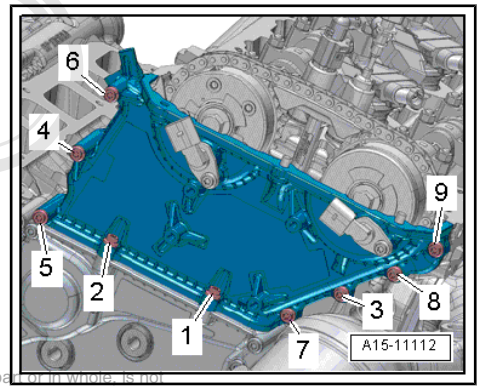

> ⚠ **Caution**
>
> *Risk of irreparable damage to engine.*
>
> ♦ *Block off the opening in the valve timing housing with a clean cloth to prevent small items from dropping into the engine.*

Protected by copyright. Copying for private or commercial purposes, in part or in whole, is not permitted unless authorised by AUDI AG. AUDI AG does not guarantee or accept any liability with respect to the correctness of information in this document. Copyright by AUDI AG.

Installing

– Remove old sealant from grooves on timing chain cover and from sealing surfaces.

> ⚠ **Caution**
>
> *Protect lubrication system against contamination.*
>
> ♦ *Cover exposed parts of the engine.*

> ⚠ **WARNING**
>
> *Risk of eye injury.*
>
> ♦ *Wear safety goggles.*

– Remove remaining sealant on timing chain cover and cylinder head using rotating plastic brush or similar.
– Clean surfaces; they must be free of oil and grease.

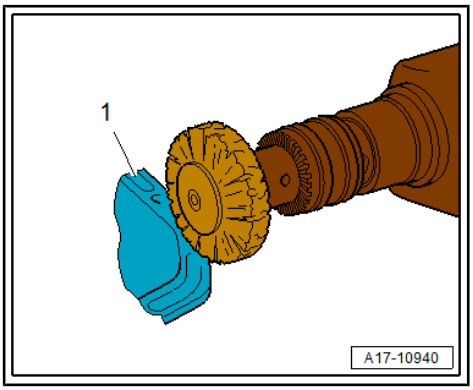

Note

Note the use-by date of the sealant.

– Cut off nozzle of tube at front marking (nozzle ∅ approx. 1.5 mm).

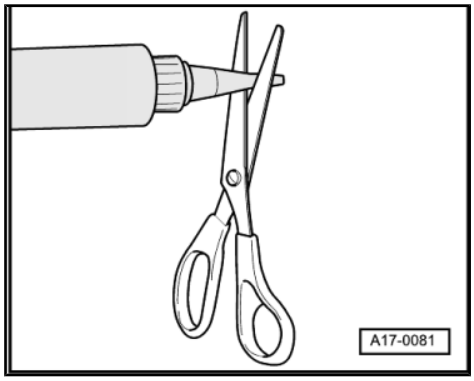

– Apply a thin bead of sealant -arrows- to the edges between the timing chain cover (bottom) and the timing chain covers (right/left).

Caution

Make sure lubrication system is not clogged by excess sealant.

- ***The bead of sealant must not be thicker than specified.***

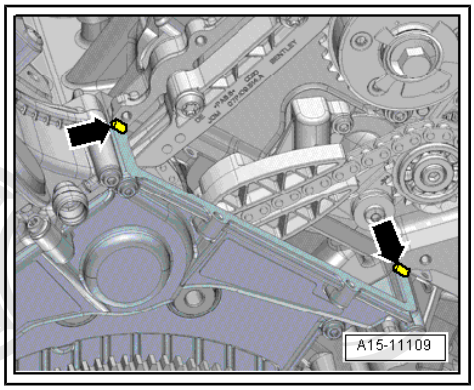

– Apply sealant bead -arrow- onto clean sealing surfaces of timing chain cover (left-side) as illustrated.

- Thickness of sealant bead: 1.5 ... 2.0 mm

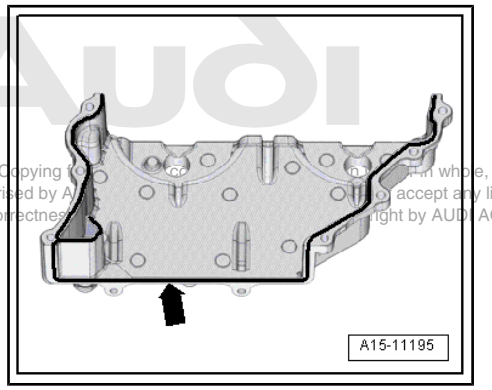

Protected by copyright. Copying for private or commercial purposes, in whole or in part, is not permitted unless authorised by AUDI AG. AUDI AG does not accept any liability with respect to the correctness and completeness of this document. Copyright by AUDI AG.

– Apply sealant bead -arrow- onto clean sealing surfaces of timing chain cover (right-side) as illustrated.

- Thickness of sealant bead: 1.5 ... 2.0 mm

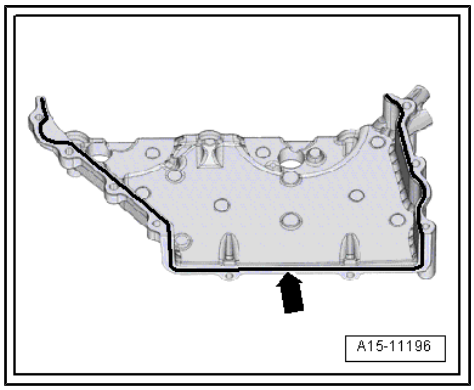

Note

The timing chain covers must be installed within 5 minutes after applying the sealant.

– Install timing chain cover (left-side) and tighten bolts ⇒ page 83 .

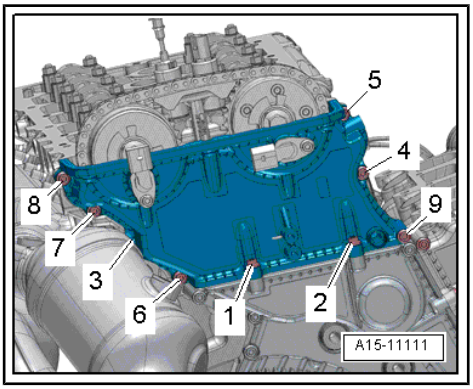

– Install timing chain cover (right-side) and tighten bolts ⇒ page 84 .
– Install cylinder head covers ⇒ page 127 .
– Secure coolant pipe (rear right) ⇒ “3.1 Exploded view - coolant pipes”, page 206 .
– Install combination valves for secondary air ⇒ page 298 .
– Install Lambda probes ⇒ page 275 .
– Install air cleaner housing ⇒ page 244 .
– Install coolant pipe (rear left) ⇒ page 216 .

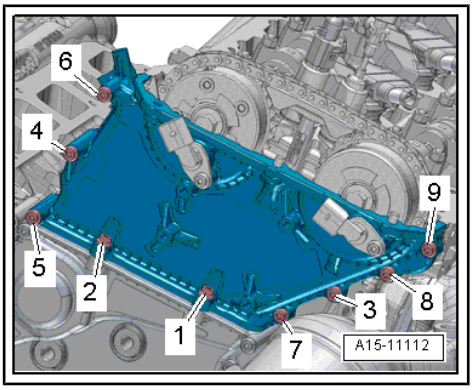

Tightening torques

♦ ⇒ Fig. ““Timing chain cover (left-side) - tightening torque and sequence”“ , page 83 .

♦ ⇒ Fig. ““Timing chain cover (right-side) - tightening torque and sequence”“ , page 84 .

1.3.2 Removing and installing timing chain cover (bottom)

Special tools and workshop equipment required

♦ Sealant ⇒ Electronic parts catalogue

♦ Electric drill with plastic brush attachment

♦ Safety goggles

Removing

• Gearbox removed ⇒ Rep. gr. 37 ; Removing and installing gearbox; Removing gearbox .

– Remove drive plate ⇒ page 76 .
– Remove timing chain covers (left and right) ⇒ page 85 .

Protected by copyright. Copying for private or commercial purposes, in part or in whole, is not permitted unless authorised by AUDI AG. AUDI AG does not guarantee or accept any liability with respect to the correctness of information in this document. Copyright by AUDI AG.

– Slacken and remove bolts in the sequence: -22 ... 1-.

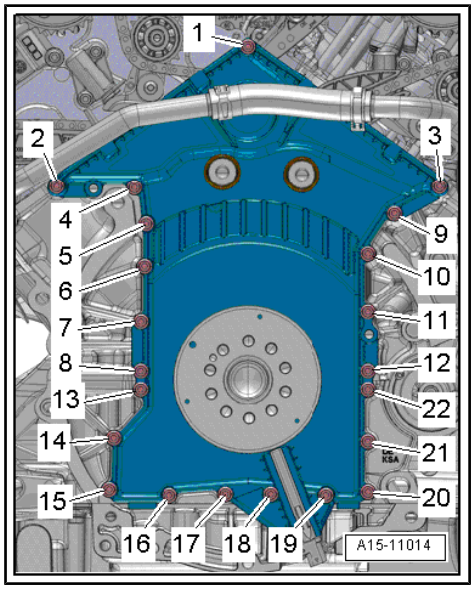

– Carefully release timing chain cover (bottom) from bonded joint -arrows-; to do so, apply two screwdrivers at lugs of casting on both sides.

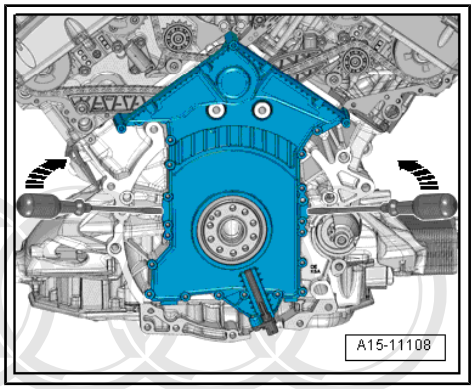

– Detach timing chain cover (bottom) and press out crankshaft oil seal -1- (gearbox end).

– Press out seals -2 and 3- for studs.

Installing

Installation is carried out in the reverse order; note the following:

Protected by copyright. Copying for private ... whole, is not permitted unless authorised by AUDI AG. ... accept any liability with respect to the correctness of inform... right by AUDI AG.

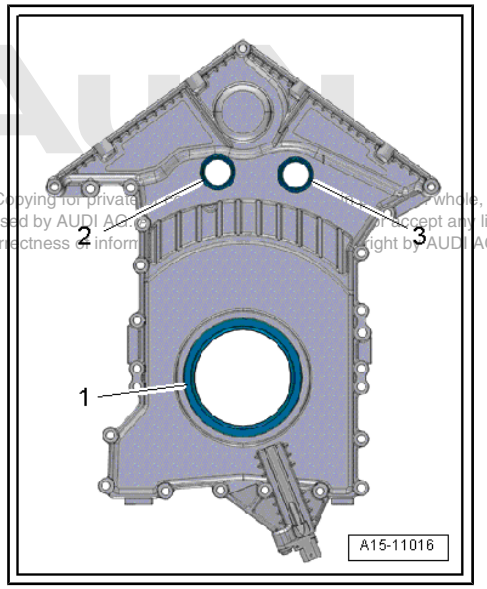

Note

Renew gaskets, seals and O-rings.

– Remove remaining sealant on timing chain cover and cylinder block/cylinder head using rotating plastic brush or similar.

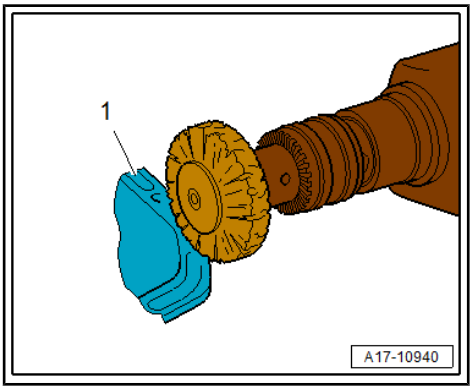

WARNING

Risk of eye injury.

- *Wear safety goggles.*

– Clean surfaces; they must be free of oil and grease.

Note

Note the use-by date of the sealant.

– Cut off nozzle of tube at front marking (nozzle ∅ approx. 1.5 mm).

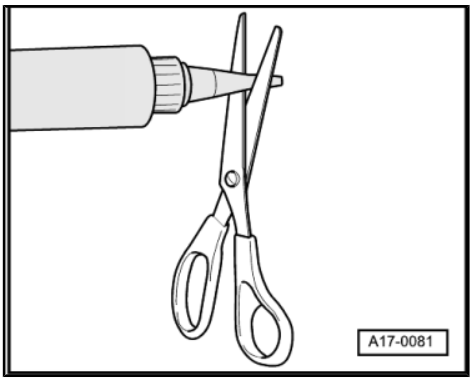

Caution

Make sure lubrication system is not clogged by excess sealant.

- *The bead of sealant must not be thicker than specified.*

– Apply sealant beads -arrows- to clean sealing surfaces of timing chain cover (bottom) as illustrated.

• Thickness of sealant beads: 1.5 ... 2.0 mm

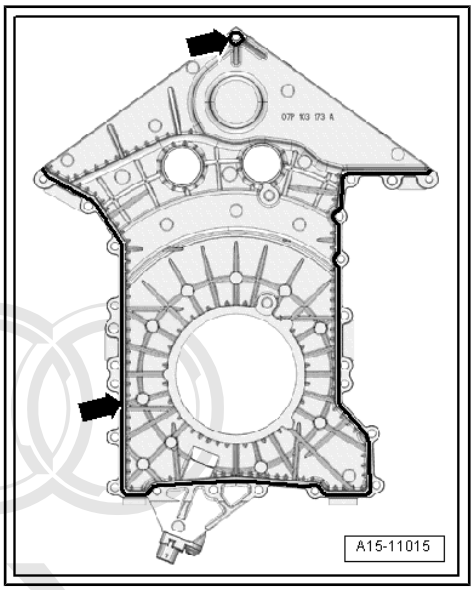

Note

The timing chain cover must be installed within 5 minutes after applying the sealant.

Protected by copyright. Copying for private or commercial purposes, in part or in whole, is not permitted unless authorised by AUDI AG. AUDI AG does not guarantee or accept any liability with respect to the correctness of information in this document. Copyright by AUDI AG.

– Install timing chain cover (bottom) and tighten bolts ⇒ page 84 .
– Install crankshaft oil seal (gearbox end) ⇒ page 79 .
– Install seals for studs ⇒ page 84 .
– Install timing chain covers (left and right) ⇒ page 85 .
– Install drive plate ⇒ page 76 .

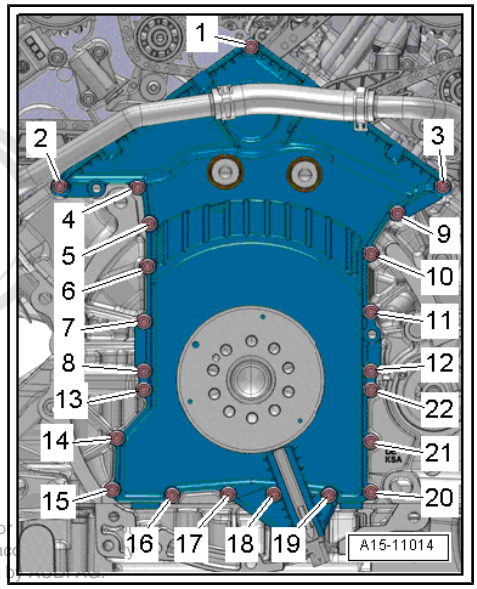

Protected by copyright. Copying for private or commercial purposes, in part o
permitted unless authorised by AUDI AG. AUDI AG does not guarantee or ac
with respect to the correctness of information in this document. Copyright

2 Chain drive

⇒ “2.1 Exploded view - camshaft timing chains”, page 93

⇒ “2.2 Exploded view - drive chain for valve gear”, page 96

⇒ “2.3 Removing camshaft timing chain from camshafts”, page 96

⇒ “2.4 Removing and installing camshaft timing chain”, page 105

⇒ “2.5 Removing and installing drive chain for valve gear”, page 114

2.1 Exploded view - camshaft timing chains

Cylinder bank 1 (right-side)

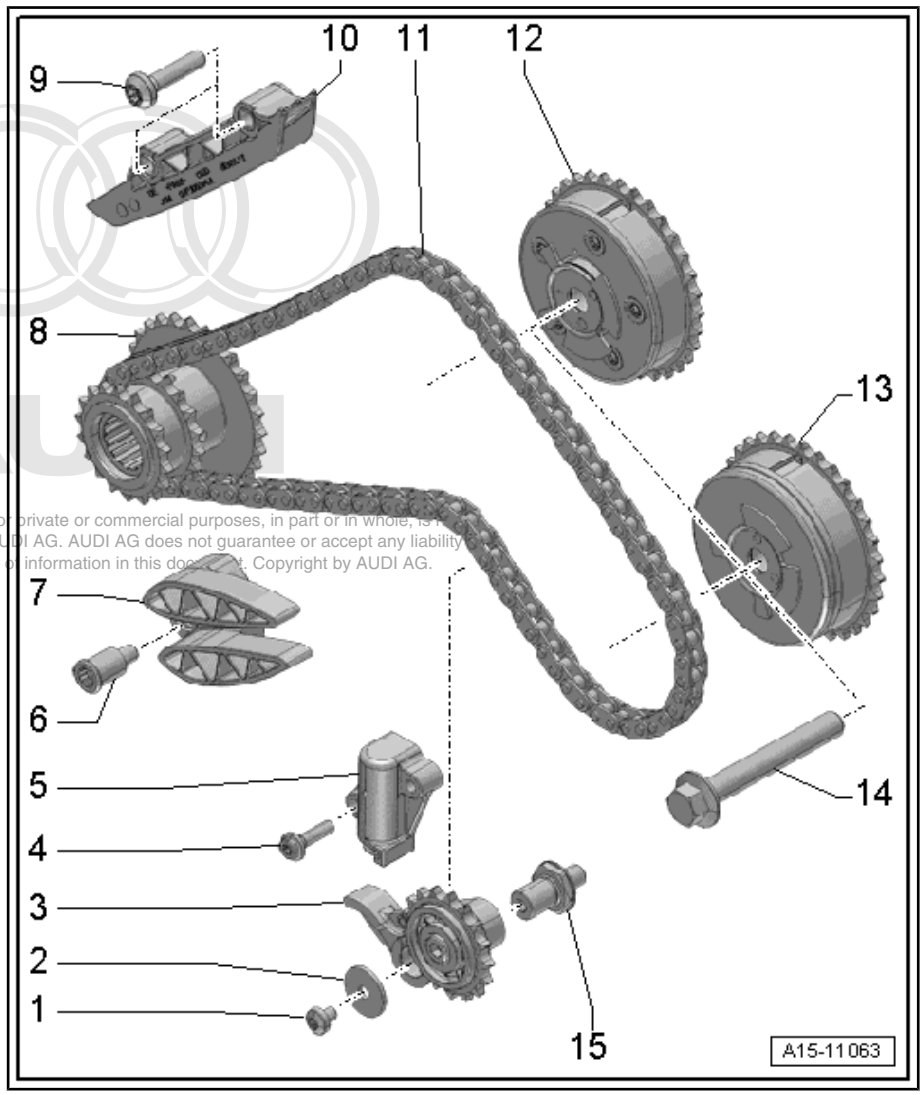

Protected by copyright. Copying for private or commercial purposes, in part or in whole, is not permitted unless authorised by AUDI AG. AUDI AG does not guarantee or accept any liability with respect to the correctness of information in this document. Copyright by AUDI AG.

1 - Bolt
- ❑ 8 Nm

2 - Washer

3 - Tensioning lever
- ❑ For chain tensioner

4 - Bolt
- ❑ Renew
- ❑ 4 Nm + turn 90° further

5 - Chain tensioner
- ❑ For camshaft timing chain

6 - Mounting pin
- ❑ For guide rail
- ❑ 20 Nm

7 - Guide rail
- ❑ For camshaft timing chain

8 - Drive chain sprocket
- ❑ For camshaft timing chains

9 - Bolt
- ❑ Renew
- ❑ 8 Nm + turn 90° further

10 - Guide rail
- ❑ For camshaft timing chain

11 - Camshaft timing chain
- ❑ Removing from camshafts ⇒ page 96
- ❑ Removing and installing ⇒ page 105

12 - Camshaft adjuster (inlet)
- ❑ Identification: B1 / metal end face
- ❑ Removing and installing ⇒ “4.5.1 Removing and installing camshaft adjuster”, page 147
- ❑ The contact surfaces between camshaft adjuster and camshaft, as well as bolt head and camshaft adjuster must be free of oil.

13 - Camshaft adjuster (exhaust)

- ❑ Identification: B1 / plastic end face
- ❑ Removing and installing ⇒ “4.5.1 Removing and installing camshaft adjuster”, page 147
- ❑ The contact surfaces between camshaft adjuster and camshaft, as well as bolt head and camshaft adjuster must be free of oil.

14 - Bolt

- ❑ Renew
- ❑ The contact surfaces between camshaft adjuster and camshaft, as well as bolt head and camshaft adjuster must be free of oil.
- ❑ 60 Nm + turn 90° further

15 - Bearing pin

- ❑ For tensioning lever
- ❑ 42 Nm

Cylinder bank 2 (left-side)

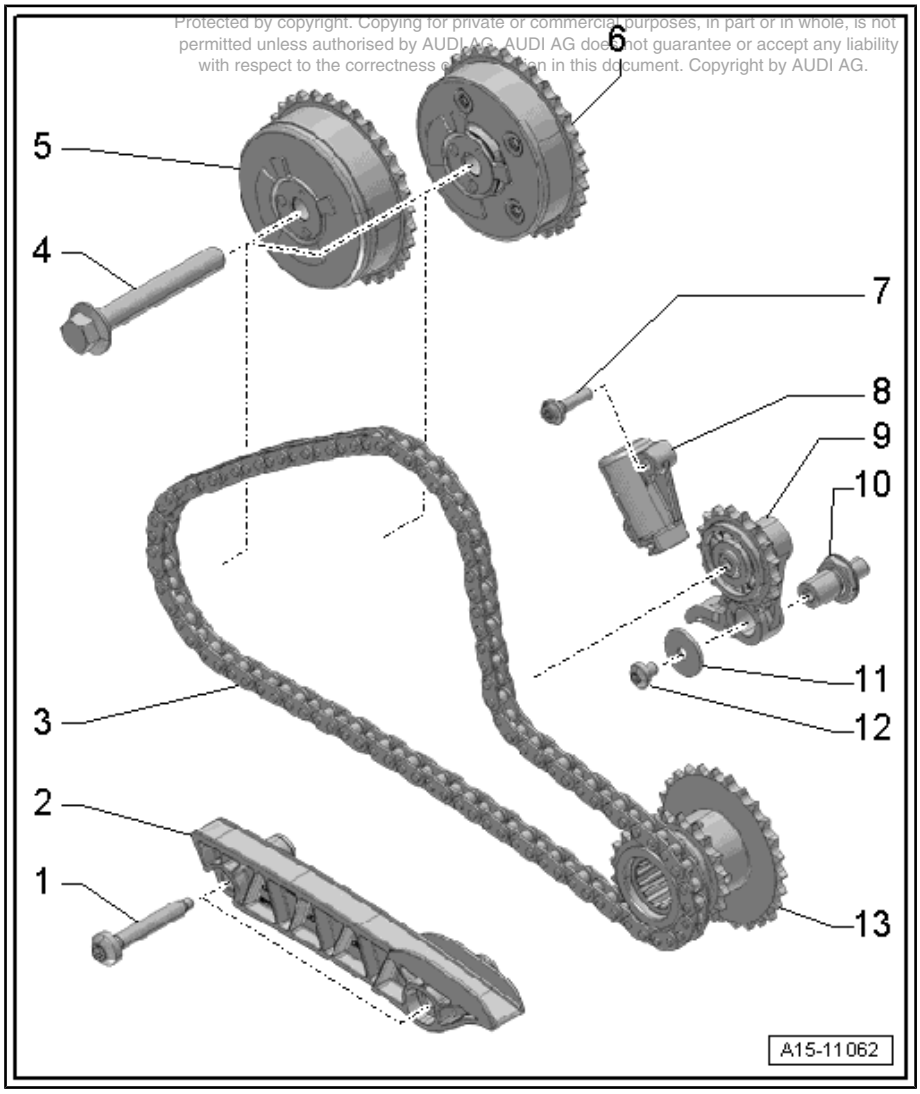

Protected by copyright. Copying for private or commercial purposes, in part or in whole, is not permitted unless authorised by AUDI AG. AUDI AG does not guarantee or accept any liability with respect to the correctness of information in this document. Copyright by AUDI AG.

1 - Bolt

- ❑ Renew
- ❑ 8 Nm + turn 90° further

2 - Chain tensioner

- ❑ For camshaft timing chain

3 - Camshaft timing chain

- ❑ Removing from camshafts ⇒ page 96
- ❑ Removing and installing ⇒ page 105

4 - Bolt

- ❑ Renew
- ❑ The contact surfaces between camshaft adjuster and camshaft, as well as bolt head and camshaft adjuster must be free of oil.
- ❑ 60 Nm + turn 90° further

5 - Camshaft adjuster (exhaust)

- ❑ Identification ⇒ page 95
- ❑ Counterhold camshaft with open-end spanner (24 mm) when loosening and tightening
- ❑ Removing and installing ⇒ page 147
- ❑ The contact surfaces between camshaft adjuster and camshaft, as well as bolt head and camshaft adjuster must be free of oil.

6 - Camshaft adjuster (inlet)

- ❑ Identification ⇒ page 95

- ❑ Counterhold camshaft with open-end spanner (24 mm) when loosening and tightening
- ❑ Removing and installing ⇒ page 147
- ❑ The contact surfaces between camshaft adjuster and camshaft, as well as bolt head and camshaft adjuster must be free of oil.

7 - Bolt

- ❑ Renew
- ❑ 4 Nm + turn 90° further

8 - Chain tensioner

- ❑ For camshaft timing chain

9 - Tensioning lever

- ❑ For chain tensioner

10 - Bearing pin

- ❑ For tensioning lever
- ❑ 42 Nm

11 - Washer

12 - Bolt

- ❑ 8 Nm

13 - Drive chain sprocket

- ❑ For camshaft timing chains

Identification for camshaft adjusters

The camshaft adjusters are marked as follows:

Camshaft adjuster (inlet)

- ♦ For cylinder bank 1 (right-side), identification: B1 -arrow 2-/ metal end face -arrow 1-
- ♦ For cylinder bank 2 (left-side), identification: B2 / metal end face -arrow 1-

Protected by copyright. Copying for private or commercial purposes, in part or in whole, is not permitted unless authorised by AUDI AG. AUDI AG does not guarantee or accept any liability with respect to the correctness of information in this document. Copyright by AUDI AG.

Camshaft adjuster (exhaust)

- ♦ For cylinder bank 1 (right-side), identification: B1 -arrow 2-/ plastic end face -arrow 1-
- ♦ For cylinder bank 2 (left-side), identification: B2 / plastic end face -arrow 1-

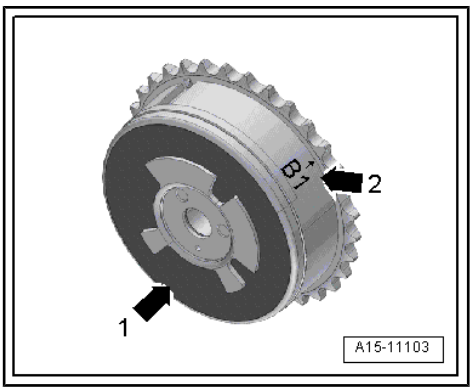

Plug for “TDC” marking - tightening torque

Note

Renew seal.

– Tighten plug -arrow- to 30 Nm.

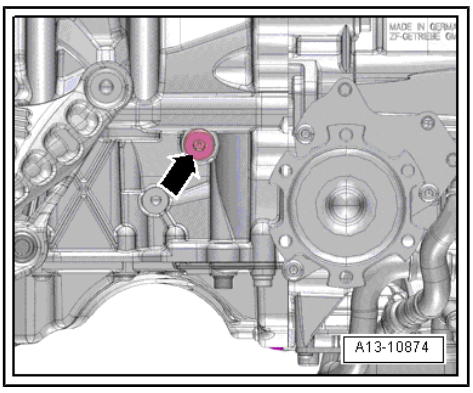

2.2 Exploded view - drive chain for valve gear

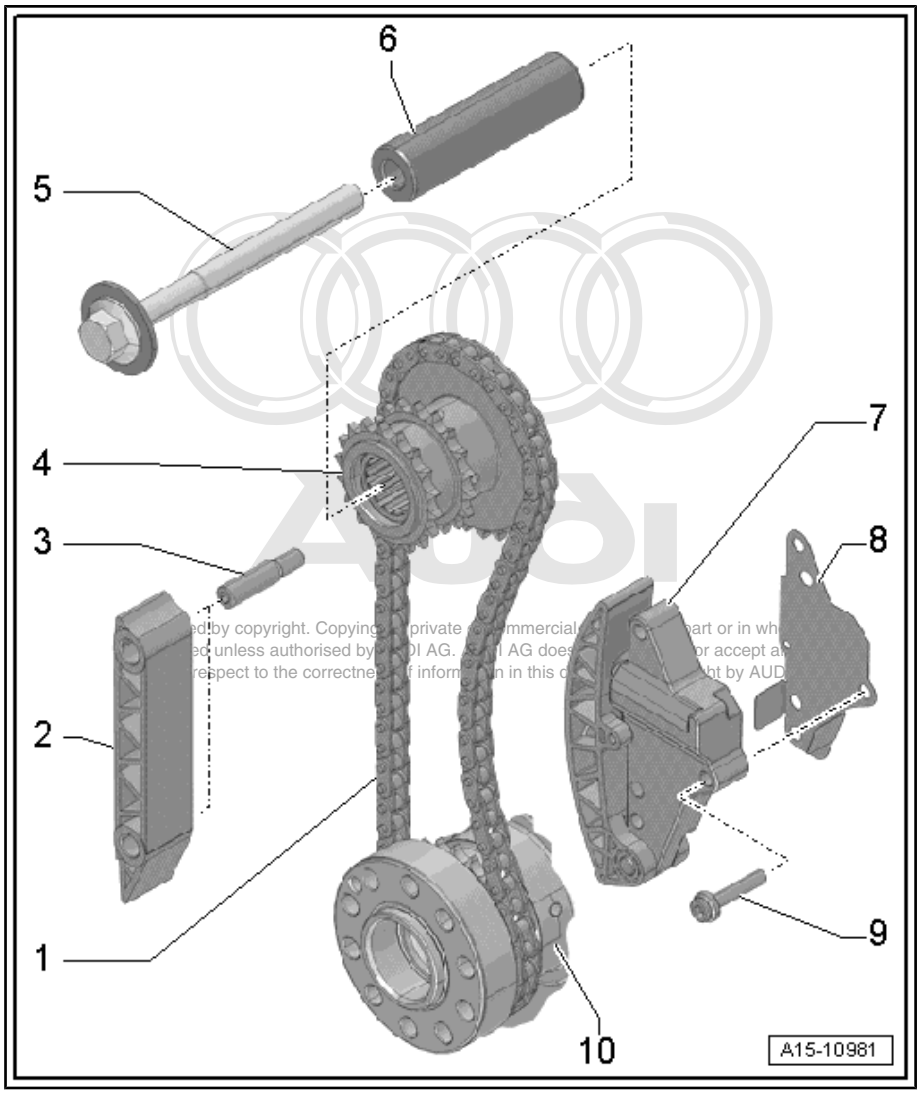

1 - Drive chain

- ❑ For timing drive
- ❑ Before removing, mark running direction with paint
- ❑ Removing and installing ⇒ page 114

2 - Guide rail

3 - Mounting pin

- ❑ For guide rail
- ❑ 15 Nm

4 - Chain sprocket

- ❑ For camshaft drive
- ❑ With needle bearings
- ❑ Renew chain sprocket if needle bearings are defective
- ❑ Removing and installing ⇒ "2.5 Removing and installing drive chain for valve gear", page 114

5 - Bolt

- ❑ Renew
- ❑ 90 Nm + turn 135° further

6 - Bearing pin

- ❑ For chain sprocket for camshaft drive

7 - Chain tensioner

- ❑ With tensioning rail for drive chain

8 - Gasket

- ❑ Renew

9 - Bolt

- ❑ 9 Nm

10 - Crankshaft

- ❑ With crankshaft chain sprocket

2.3 Removing camshaft timing chain from camshafts

Special tools and workshop equipment required

- Locking pin - 3242-

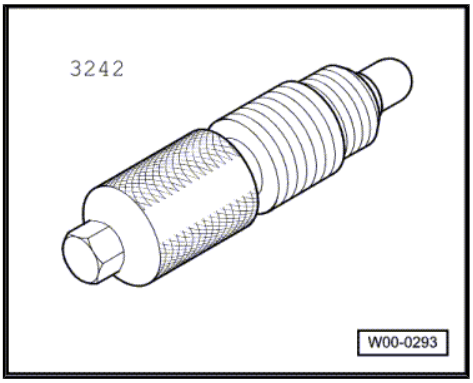

- Locking pin - T03006-

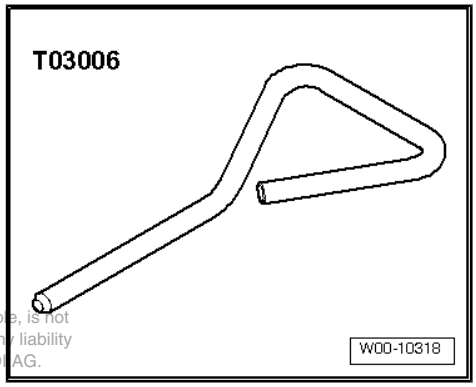

Protected by copyright. Copying for private or commercial purposes, in part or in whole, is not permitted unless authorised by AUDI AG. AUDI AG does not guarantee or accept any liability with respect to the correctness of information in this document. Copyright by AUDI AG.

- Camshaft bar - T10068 A-

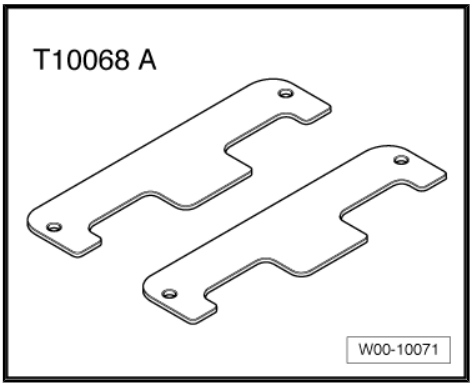

- Counterhold tool - T10172- with pins -T10172/1-

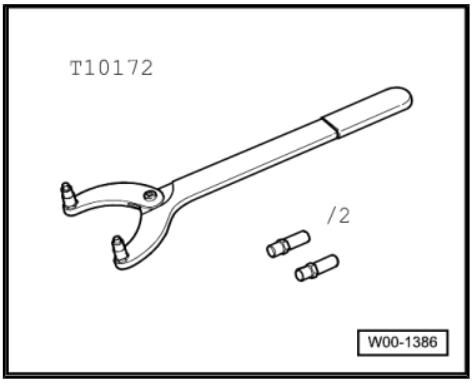

Removing

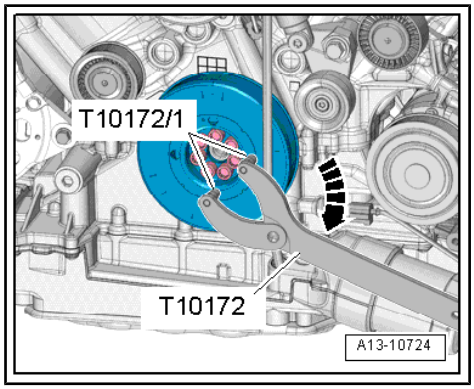

Note

The following describes the removal and installation procedures for both cylinder banks. The timing chains can also be removed from one cylinder bank only.

– Remove cylinder head cover (left and right) ⇒ page 127 .

– Turn crankshaft in normal direction of engine rotation -arrow- to “TDC” position using counterhold tool - T10172- and pins - T10172/1- .

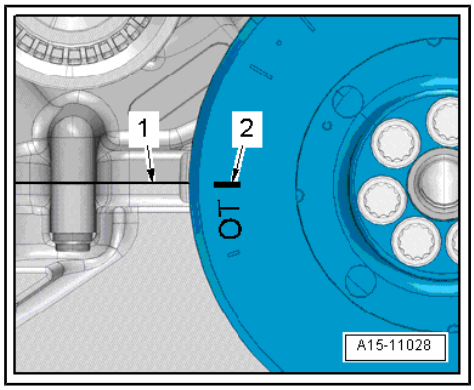

• Marking -2- on vibration damper must align with housing joint -1-.

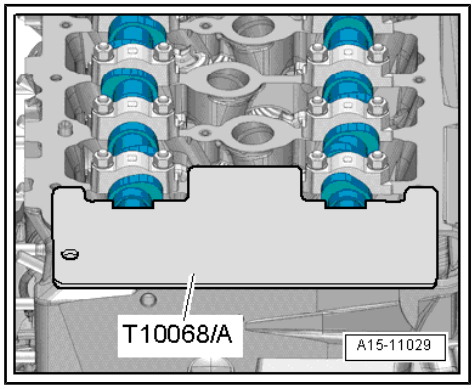

• It should then be possible to insert camshaft bar - T10068 A- in slots in both camshafts (both cylinder heads).

Caution

Avoid damage to camshafts.

- ***The camshaft bar - T10068 A- is only used for locking the camshafts at “TDC”. Use a 24 mm open-end spanner to counterhold at hexagon flats of camshaft.***

– If necessary, turn crankshaft one turn further.

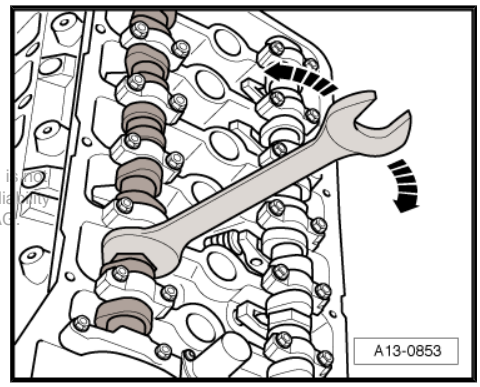

Note

It may be necessary to turn the camshafts back and forth slightly using a 24 mm open-end spanner. The camshaft bar - T10068 A- must not be in place when doing this.

Reproduction for private or commercial purposes, in part or in whole, is not permitted unless authorised by AUDI AG. AUDI AG does not guarantee or accept any liability with respect to the correctness of information in this document. Copyright by AUDI AG.

– Remove front wheel housing liner (left-side) completely ⇒ General body repairs, exterior; Rep. gr. 66 ; Wheel housing liner; Removing and installing front wheel housing liner .

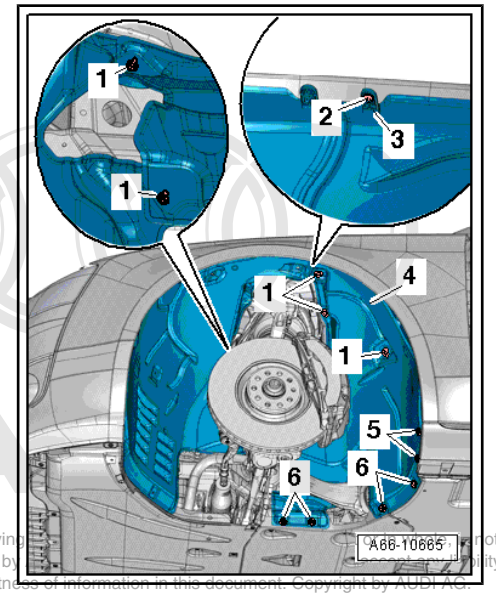

Protected by copyright. Copying for private or commercial purposes, in part or not permitted unless authorised by AUDI AG. AUDI AG does not guarantee or assume any liability with respect to the correctness of information in this document. Copyright by AUDI AG.

– Remove bolts -arrows- and detach heat shield for drive shaft (left-side).

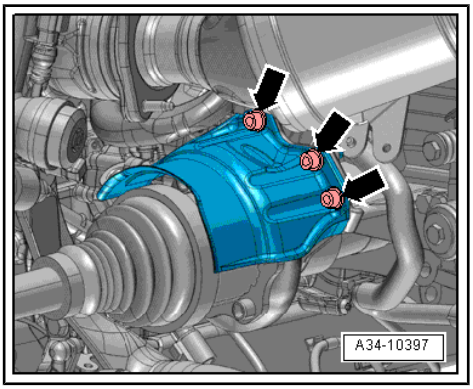

– Unbolt drive shaft (left-side) from gearbox flange shaft ⇒ Running gear, axles, steering; Rep. gr. 40 ; Drive shaft; Removing and installing drive shaft .

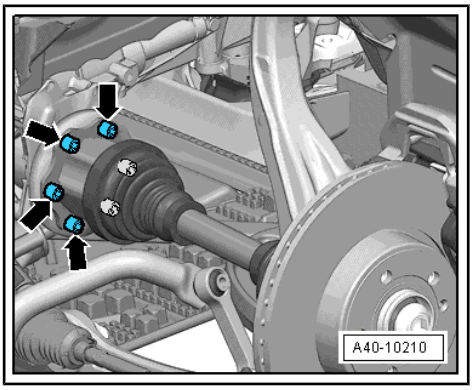

– Unscrew plug -arrow- for “TDC” marking from cylinder block.

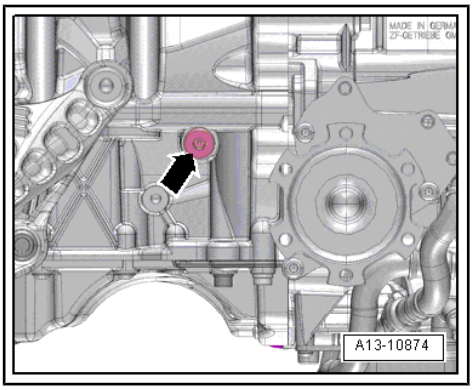

– Screw locking pin - 3242- into hole and tighten to 20 Nm.
– Remove timing chain covers (left and right) ⇒ page 85 .

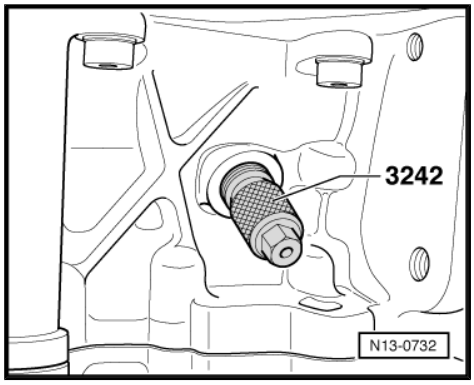

– To slacken camshaft timing chain (cylinder bank 2, left-side), turn tensioning lever in direction of -arrow-.
– Lock piston of chain tensioner with locking pin -T03006- .

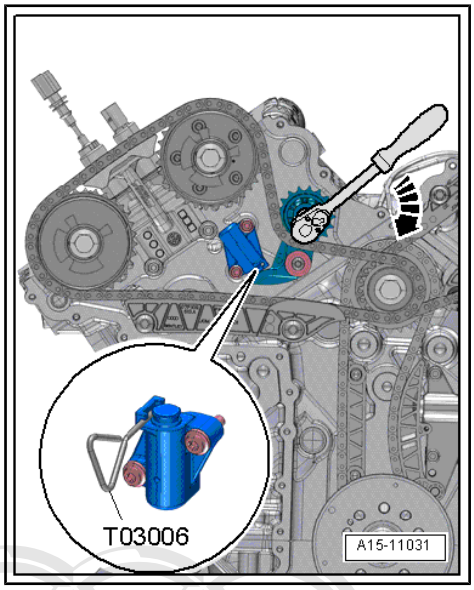

– Counterhold at hexagon flats of inlet camshaft using 24 mm open-end spanner -item 2- and unscrew bolt -1-.
– Remove inlet camshaft adjuster -3-.
– Move camshaft timing chain (cylinder bank 2, left-side) to one side and secure it to prevent it from dropping.

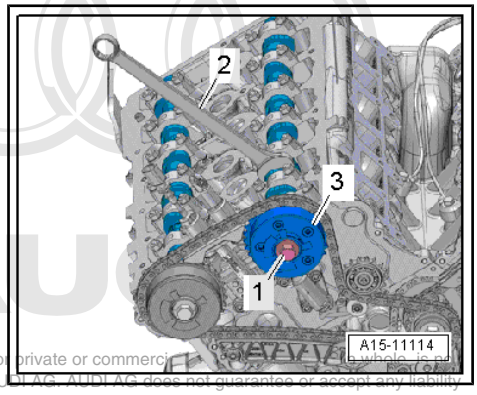

Protected by copyright. Copying for private or commercial purposes, in whole or in part, is not permitted unless authorised by AUDI AG. AUDI AG does not guarantee or accept any liability with respect to the correctness of information in this document. Copyright by AUDI AG.

– To slacken camshaft timing chain (cylinder bank 1, right-side), turn tensioning lever in direction of -arrow-.
– Lift guide rail slightly and lock piston of chain tensioner with locking pin -T03006- .
– Unscrew bolts -1- and remove guide rail.

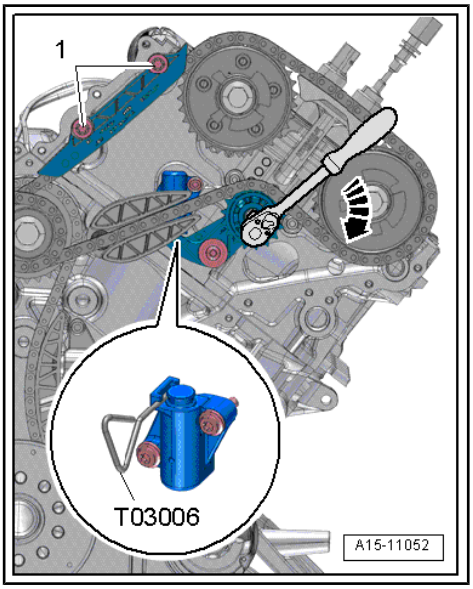

– Counterhold at hexagon flats of exhaust camshaft using 24 mm open-end spanner -item 2- and unscrew bolt -1-.
– Remove exhaust camshaft adjuster -3-.
– Move camshaft timing chain (cylinder bank 1, right-side) to one side and secure it to prevent it from dropping.

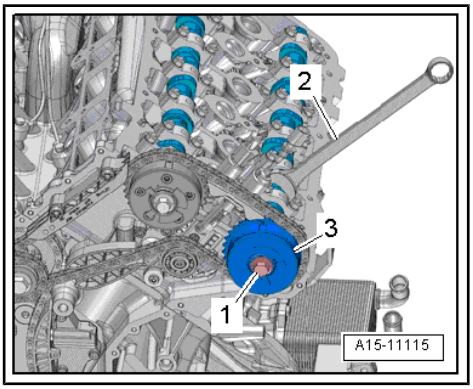

Installing

• Both camshafts locked in “TDC” position with camshaft bar - T10068 A- .

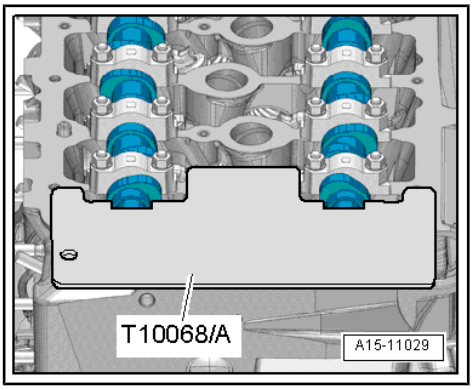

• Crankshaft locked in “TDC” position with locking pin - 3242- .

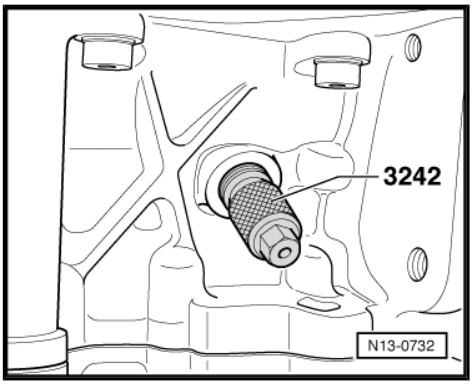

Note

Renew the bolts tightened with specified tightening angle.

Protected by copyright. Copying for private or commercial purposes, in part or in whole, is not permitted unless authorised by AUDI AG. AUDI AG does not guarantee or accept any liability with respect to the correctness of information in this document. Copyright by AUDI AG.

Cylinder bank 1 (right-side):

– First fit timing chain for cylinder bank 1 (right-side) onto camshaft drive chain sprocket and then onto inlet camshaft adjuster -1- so it is taut.

• Camshaft timing chain must not hang loosely between camshaft drive chain sprocket and inlet camshaft adjuster -arrow- but must be taut.

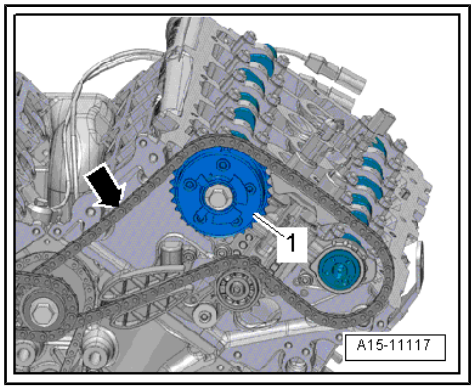

– Insert exhaust camshaft adjuster -1- in camshaft timing chain and fit on exhaust camshaft -2-.

• Dowel pin in exhaust camshaft adjuster must be inserted in locating hole in exhaust camshaft -arrow-.

• Camshaft timing chain must not hang loosely between camshaft adjusters but must be taut.

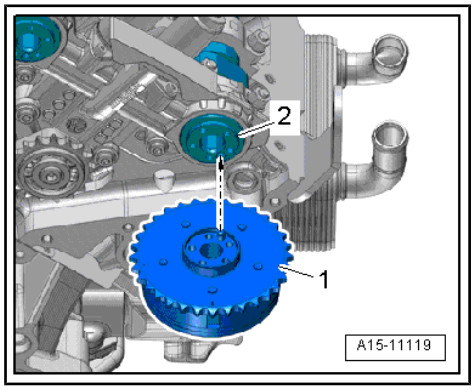

– Counterhold at hexagon flats of exhaust camshaft with 24 mm open-end spanner -item 2- and tighten bolt -1- for exhaust camshaft adjuster -3-

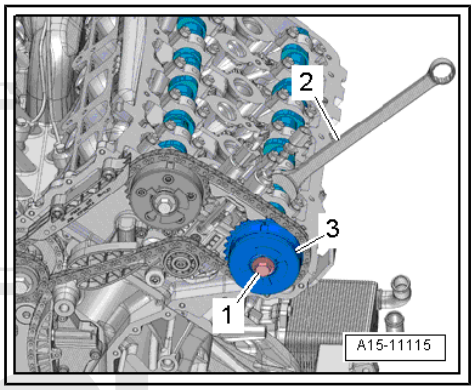

– To release chain tensioner, turn tensioning lever in direction of -arrow- and pull off locking pin -T03006- .

Protected by copyright. Copying for private or commercial purposes, in part or in whole, is not permitted unless authorised by AUDI AG. AUDI AG does not make any representation or warranty with respect to the correctness of information in this document.

Note

Disregard -item 1-.

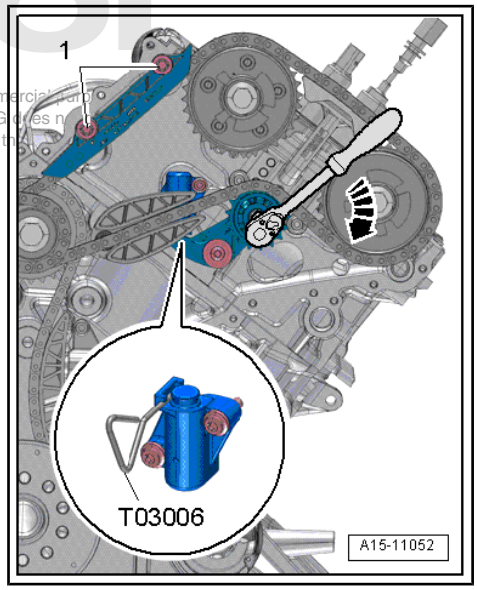

Cylinder bank 2 (left-side):

– First fit timing chain for cylinder bank 2 (left-side) onto camshaft drive chain sprocket and then onto exhaust camshaft adjuster -1- so it is taut.

• Camshaft timing chain must not hang loosely between camshaft drive chain sprocket and exhaust camshaft adjuster -arrow- but must be taut.

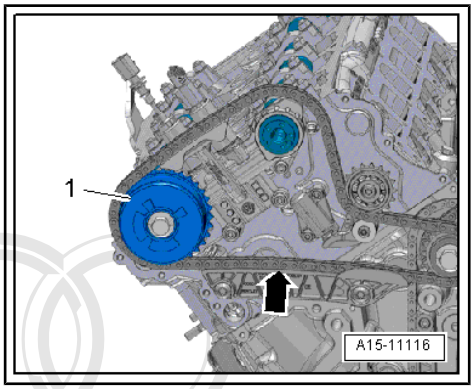

– Insert inlet camshaft adjuster -1- in camshaft timing chain and fit on inlet camshaft -2-.

• Dowel pin in inlet camshaft adjuster must be inserted in locating hole in inlet camshaft -arrow-.

• Camshaft timing chain must not hang loosely between camshaft adjusters but must be taut.

Protected by copyright. Copying for private or commercial purposes, in part or in whole, is not permitted unless authorised by AUDI AG. AUDI AG does not guarantee or assume any liability with respect to the correctness of information in this document. Copyright by AUDI AG.

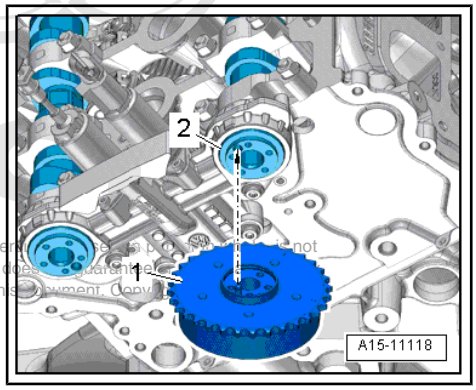

– Counterhold at hexagon flats of inlet camshaft with 24 mm open-end spanner -item 2- and tighten bolt -1- for inlet camshaft adjuster -3-

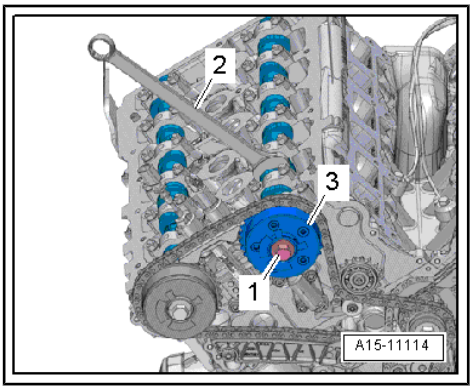

– To release chain tensioner, turn tensioning lever in direction of -arrow- and pull off locking pin -T03006- .

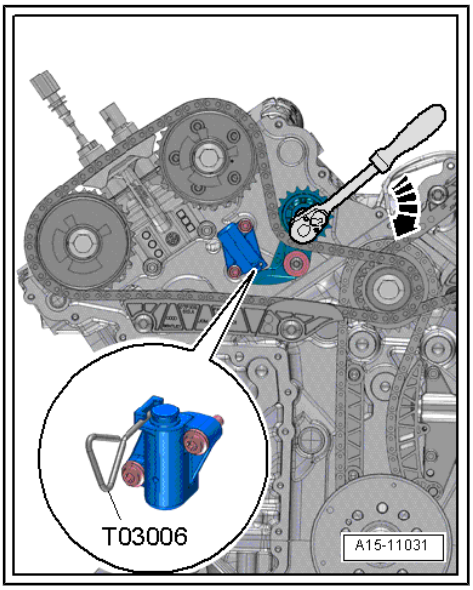

Continued for both cylinder banks:

– Remove camshaft bar - T10068 A- from both cylinder heads.

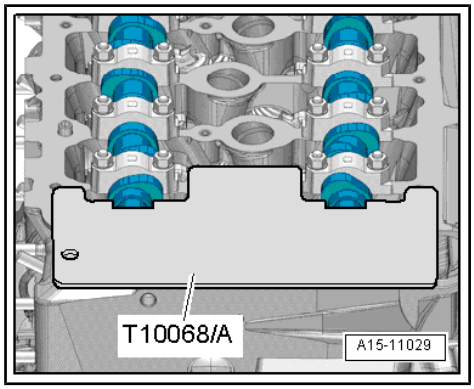

– Remove locking pin - 3242- .

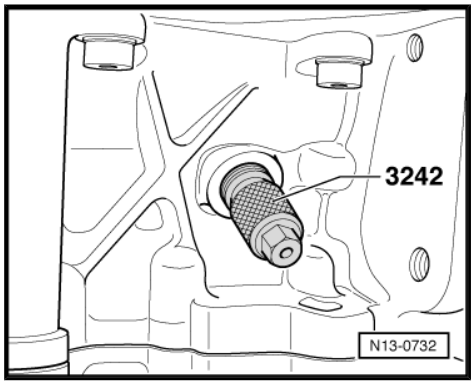

– Turn crankshaft two rotations in direction of engine rotation -arrow-.

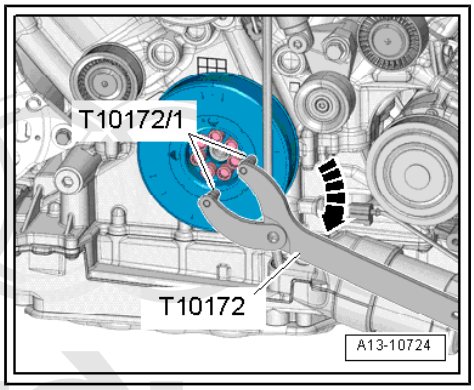

• Marking -2- on vibration damper must align with housing joint -1-.

Protected by copyright. Copying for private or c
permitted unless authorised by AUDI AG. AUD
with respect to the correctness of information

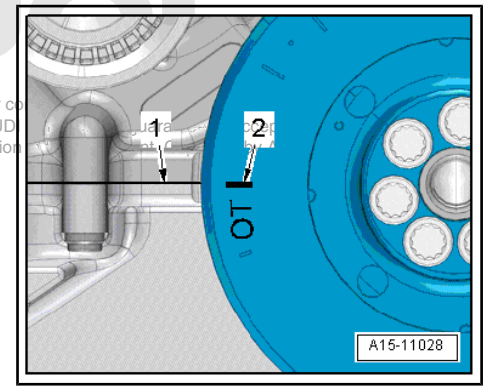

– Screw locking pin - 3242- into hole and tighten to 20 Nm.

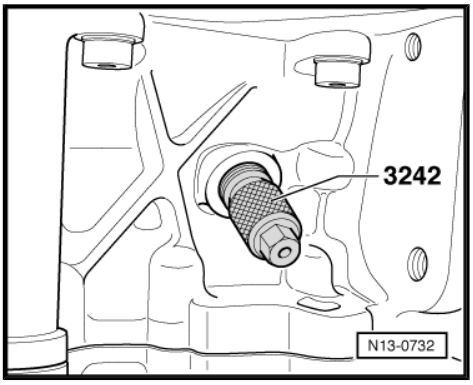

• It should be possible to insert the camshaft bar - T10068 A- in the slots in both camshafts.

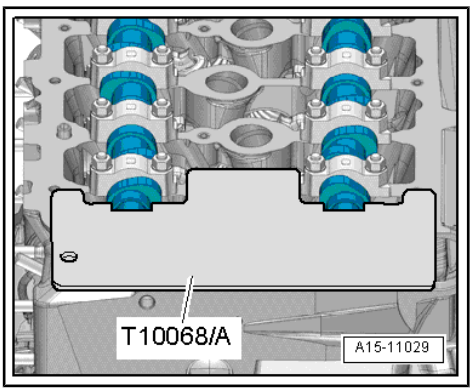

Protected by copyright. Copying for private or commercial purposes, in part or in whole, is not permitted unless authorised by AUDI AG. AUDI AG does not guarantee or accept any liability with respect to the correctness of information in this document. Copyright by AUDI AG.

Note

It may be necessary to turn the camshafts back and forth slightly using a 24 mm open-end spanner. The camshaft bar - T10068 A- must not be in place when doing this.

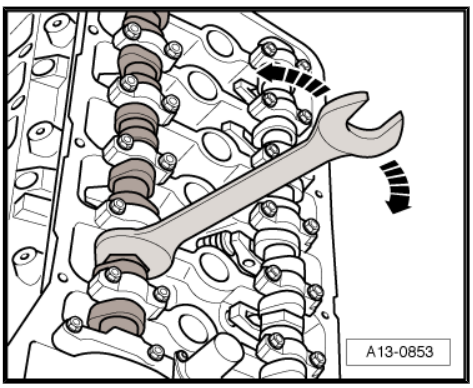

– Remove camshaft bar - T10068 A- from both cylinder heads.

– Remove locking pin - 3242- .

– Tighten plug for “TDC” marking ⇒ page 95 .

Remaining installation steps are carried out in reverse sequence; note the following:

– Install timing chain covers (left and right) ⇒ page 85 .

– Install cylinder head covers ⇒ page 127 .

Tightening torques

♦ ⇒ “2.1 Exploded view - camshaft timing chains”, page 93

♦ ⇒ Running gear, axles, steering; Rep. gr. 40 ; Drive shaft; Exploded view - drive shaft

♦ ⇒ General body repairs, exterior; Rep. gr. 66 ; Wheel housing liner; Exploded view - wheel housing liner (front)

2.4 Removing and installing camshaft timing chain

Special tools and workshop equipment required

- Locking pin - 3242-

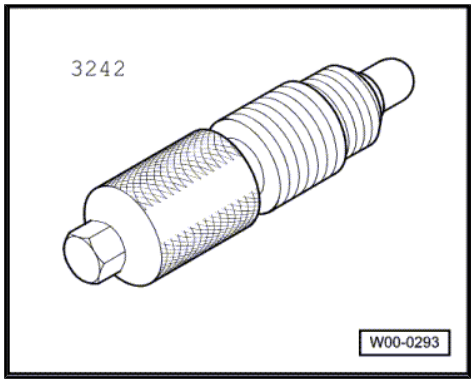

- Locking pin -T03006-

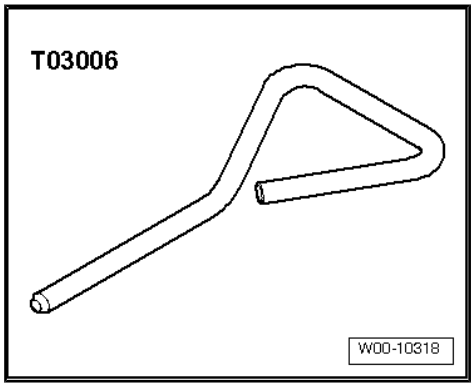

- Camshaft bar - T10068 A-

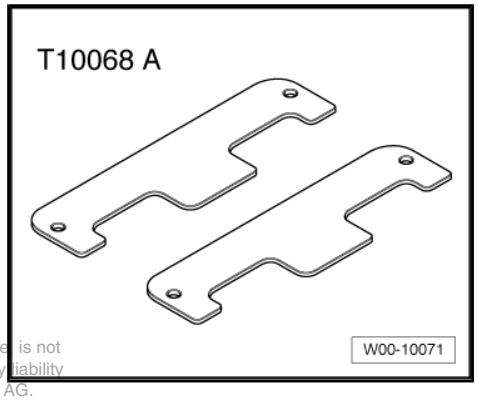

Protected by copyright. Copying for private or commercial purposes, in part or in whole is not permitted unless authorised by AUDI AG. AUDI AG does not guarantee or accept any liability with respect to the correctness of information in this document. Copyright by AUDI AG.

- Counterhold tool - T10172- with pins -T10172/1-

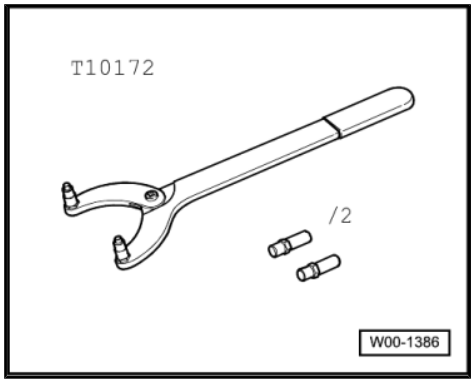

Removing

- Gearbox removed ⇒ Rep. gr. 37 ; Removing and installing gearbox; Removing gearbox .

– Remove drive plate ⇒ page 76 .

– Remove cylinder head cover (left and right) ⇒ page 127 .

– Turn crankshaft in normal direction of engine rotation -arrow- to “TDC” position using counterhold tool - T10172- and pins - T10172/1- .

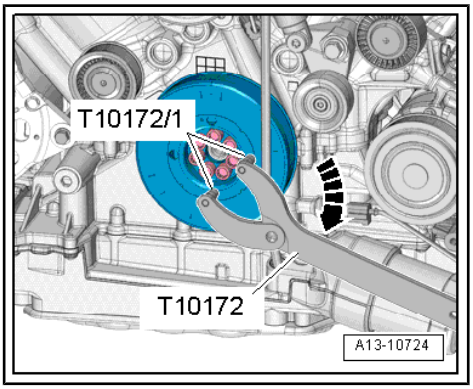

• Marking -2- on vibration damper must align with housing joint -1-.

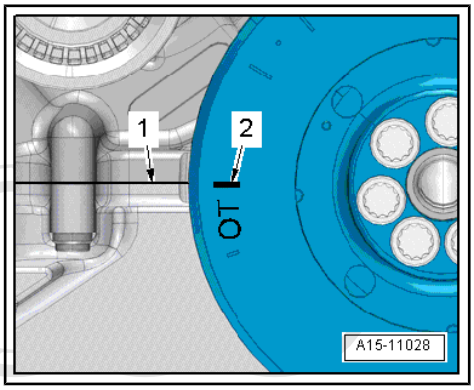

• It should then be possible to insert camshaft bar - T10068 A- in slots in both camshafts (both cylinder heads).

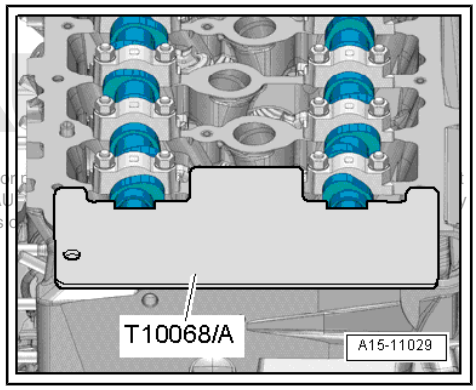

Caution

Avoid damage to camshafts.

- *The camshaft bar - T10068 A- is only used for locking the camshafts at “TDC”. Use a 24 mm open-end spanner to counterhold at hexagon flats of camshaft.*

Protected by copyright. Copying for p
permitted unless authorised by AU
correctness o

– If necessary, turn crankshaft one turn further.

Note

It may be necessary to turn the camshafts back and forth slightly using a 24 mm open-end spanner. The camshaft bar - T10068 A- must not be in place when doing this.

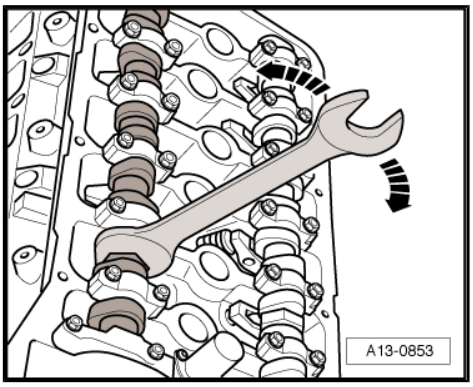

– Unscrew plug -arrow- for “TDC” marking from cylinder block.

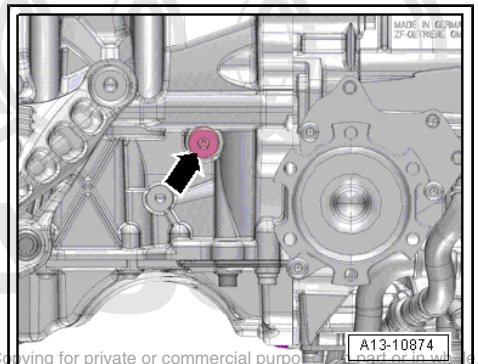

Protected by copyright. Copying for private or commercial purposes, in part or in whole, is not permitted unless authorised by AUDI AG. AUDI AG does not guarantee or accept any liability with respect to the correctness of information in this document. Copyright by AUDI AG.

– Screw locking pin - 3242- into hole and tighten to 20 Nm.

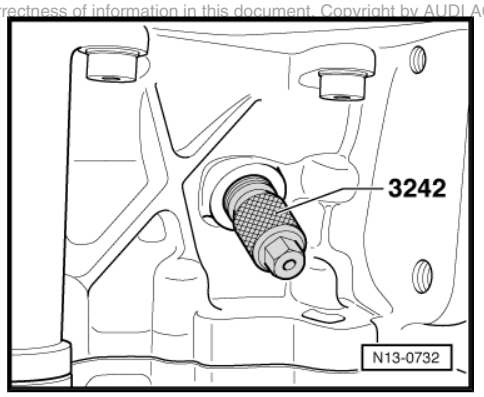

– Remove all timing chain covers ⇒ page 89 .

> ⚠ **Caution**
>
> *If a used timing chain rotates in the opposite direction when it is refitted, this can cause breakage.*
>
> ♦ *Mark running direction and allocation of camshaft timing chains with coloured arrows for re-installation.*

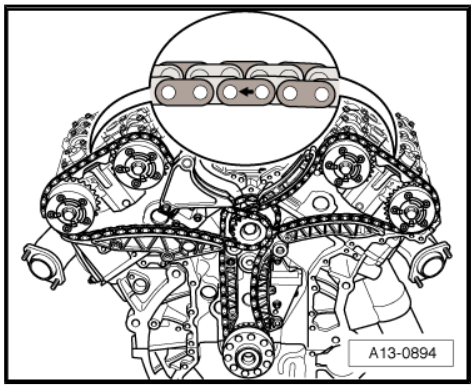

– To slacken camshaft timing chain (cylinder bank 2, left-side), turn tensioning lever in direction of -arrow-.

– Lock piston of chain tensioner with locking pin -T03006- .

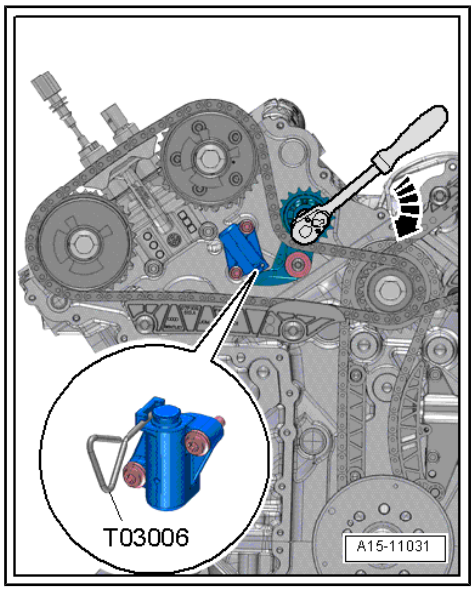

– Counterhold at hexagon flats of inlet camshaft using 24 mm open-end spanner -item 2- and unscrew bolt -1-.
– Remove inlet camshaft adjuster -3-.
– Remove camshaft timing chain for cylinder bank 2 (left-side).

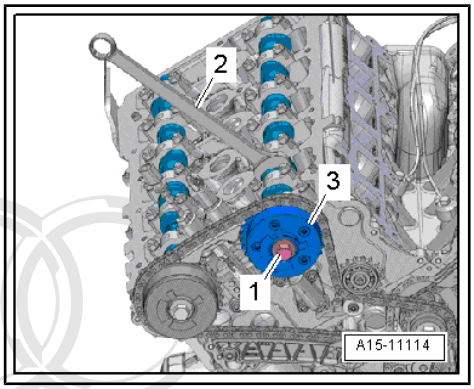

– To slacken camshaft timing chain (cylinder bank 1, right-side), turn tensioning lever in direction of -arrow-.
– Lift guide rail slightly and lock piston of chain tensioner with locking pin -T03006- .
– Unscrew bolts -1- and remove guide rail.

Protected by copyright. Copying for private or commercial
permitted unless authorised by AUDI AG. AUDI AG does
with respect to the correctness of information in this d

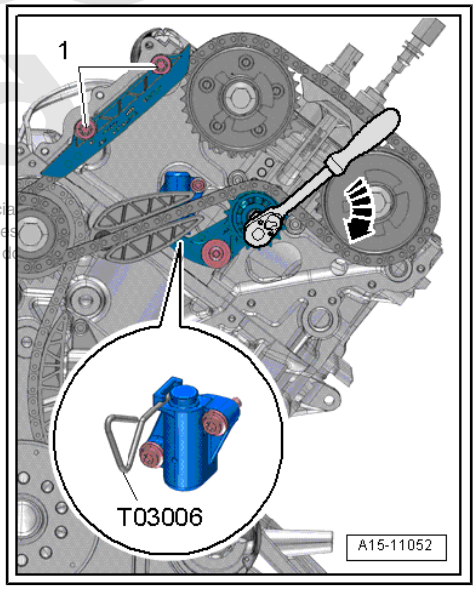

– Counterhold at hexagon flats of exhaust camshaft using 24 mm open-end spanner -item 2- and unscrew bolt -1-.
– Remove exhaust camshaft adjuster -3-.
– Remove camshaft timing chain for cylinder bank 1 (right-side).

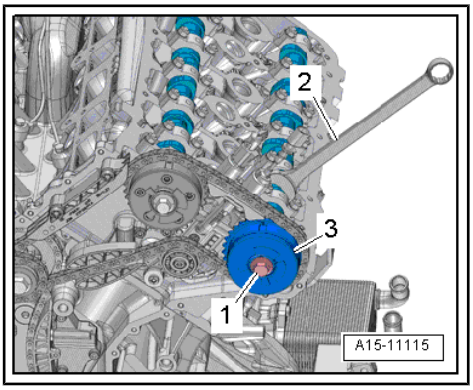

Installing

• Both camshafts locked in “TDC” position with camshaft bar -T10068 A- .

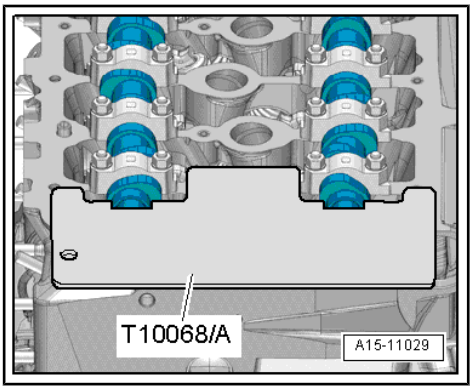

- Crankshaft locked in “TDC” position with locking pin - 3242- .
- Drive chain for valve gear installed ⇒ page 114

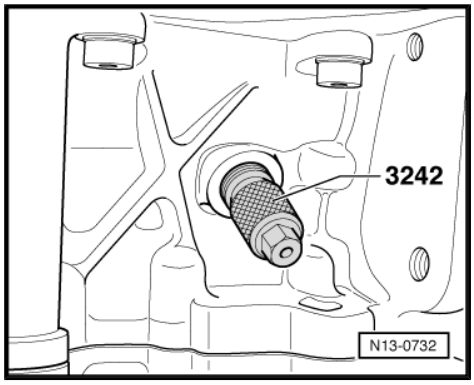

Note

Renew the bolts tightened with specified tightening angle.

Cylinder bank 1 (right-side):

– Using markings made during removal as a reference, first fit timing chain for cylinder bank 1 (right-side) onto camshaft drive chain sprocket and then onto inlet camshaft adjuster -1- so it is taut.

- Camshaft timing chain must not hang loosely between camshaft drive chain sprocket and inlet camshaft adjuster -arrow- but must be taut.

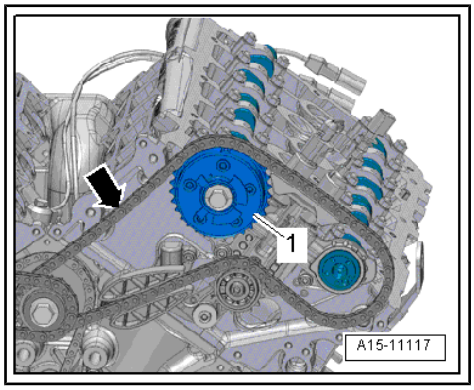

– Insert exhaust camshaft adjuster -1- in camshaft timing chain and fit on exhaust camshaft -2-.

- Dowel pin in exhaust camshaft adjuster must be inserted in locating hole in exhaust camshaft -arrow-.
- Camshaft timing chain must not hang loosely between camshaft adjusters but must be taut.

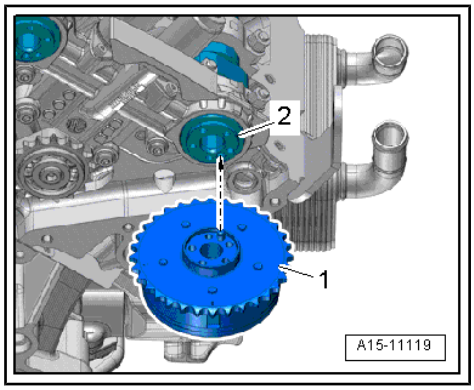

– Counterhold at hexagon flats of exhaust camshaft with 24 mm open-end spanner -item 2- and tighten bolt -1- for exhaust camshaft adjuster -3-

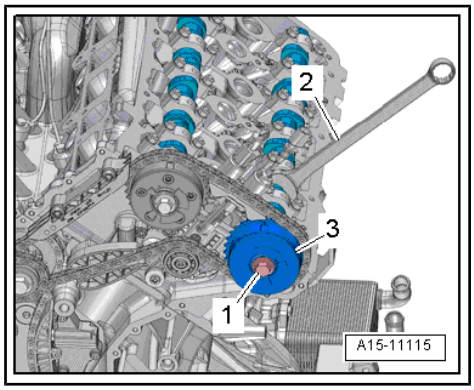

Protected by copyright. Copying for private or commercial purposes, in part or in whole, is not permitted unless authorised by AUDI AG. AUDI AG does not guarantee or accept any liability with respect to the correctness of information in this document. Copyright by AUDI AG.

– To release chain tensioner, turn tensioning lever in direction of -arrow- and pull off locking pin -T03006- .

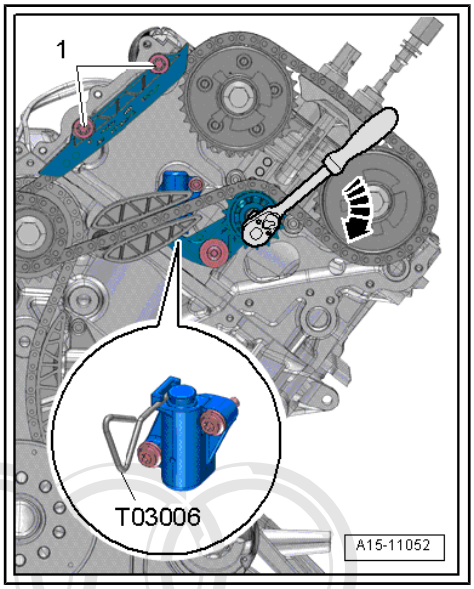

Note

Disregard -item 1-.

Cylinder bank 2 (left-side):

– Using markings made during removal as a reference, first fit timing chain for cylinder bank 2 (left-side) onto camshaft drive chain sprocket and then onto exhaust camshaft adjuster -1- so it is taut.

• Camshaft timing chain must not hang loosely between camshaft drive chain sprocket and exhaust camshaft adjuster -arrow- but must be taut.

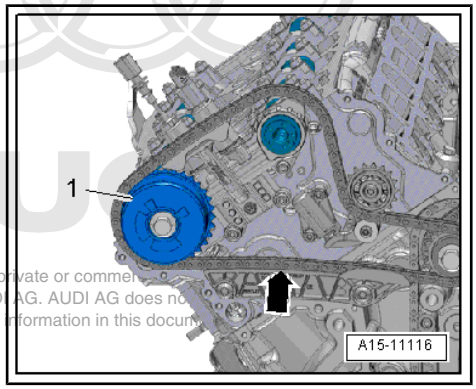

Protected by copyright. Copying for private or commer
permitted unless authorised by AUDI AG. AUDI AG does no
with respect to the correctness of information in this docum

– Insert inlet camshaft adjuster -1- in camshaft timing chain and fit on inlet camshaft -2-.

• Dowel pin in inlet camshaft adjuster must be inserted in locating hole in inlet camshaft -arrow-.

• Camshaft timing chain must not hang loosely between camshaft adjusters but must be taut.

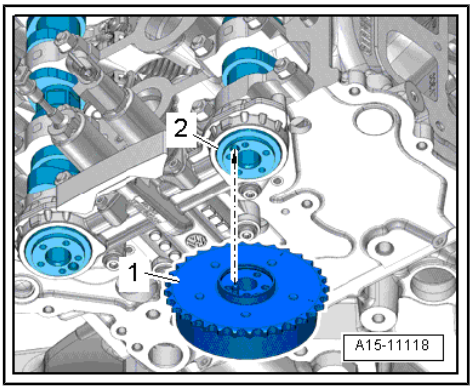

– Counterhold at hexagon flats of inlet camshaft with 24 mm open-end spanner -item 2- and tighten bolt -1- for inlet camshaft adjuster -3-

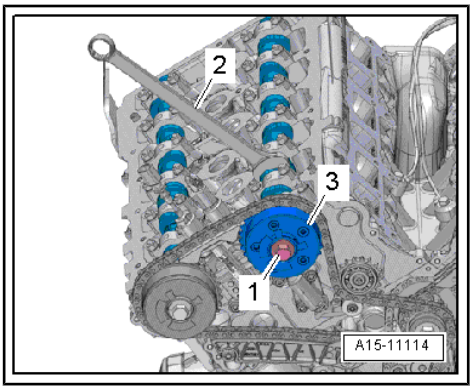

– To release chain tensioner, turn tensioning lever in direction of -arrow- and pull off locking pin -T03006- .

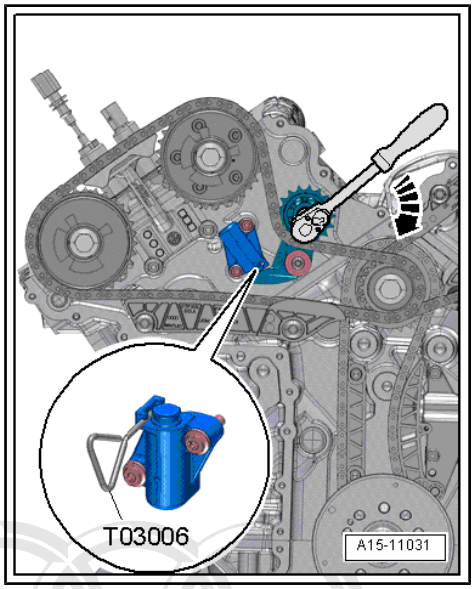

Continued for both cylinder banks:

– Remove camshaft bar - T10068 A- from both cylinder heads.

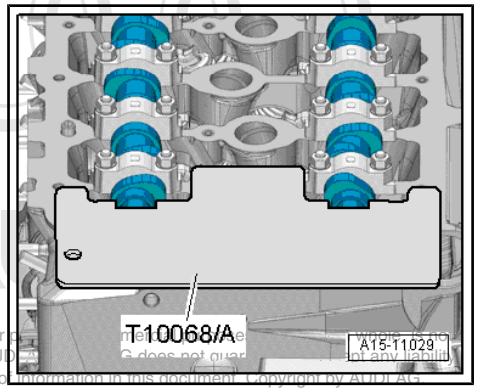

Protected by copyright. Copying for private or commercial purposes, in part or in whole, is not permitted unless authorised by AUDI AG. AUDI AG does not guarantee the accuracy or completeness of information in this document. Copyright by AUDI AG.

– Remove locking pin - 3242- .

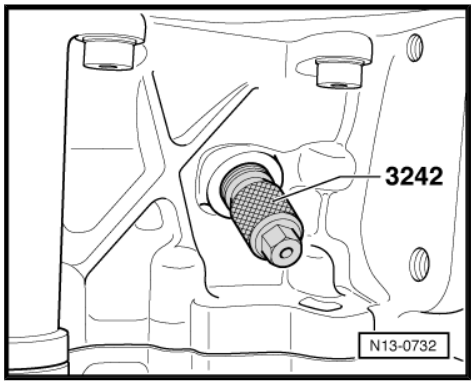

– Turn crankshaft two rotations in direction of engine rotation -arrow-.

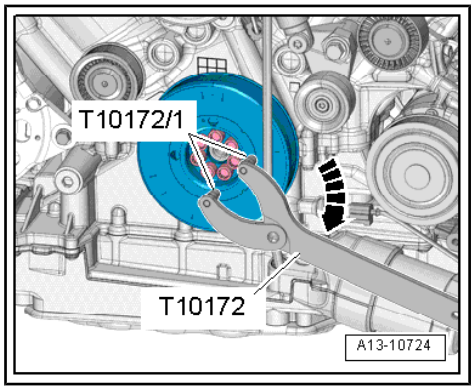

- Marking -2- on vibration damper must align with housing joint -1-.

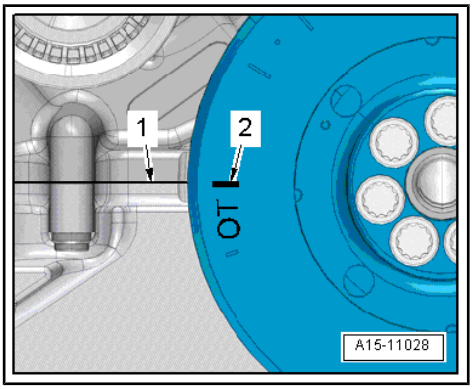

– Screw locking pin - 3242- into hole and tighten to 20 Nm.

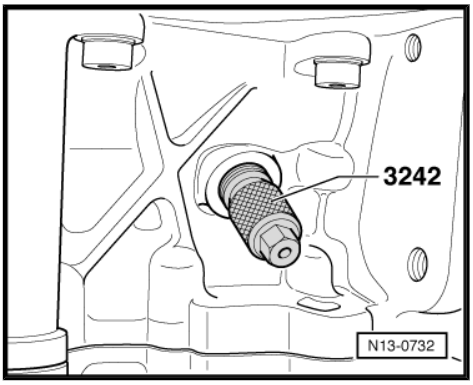

- It should be possible to insert the camshaft bar - T10068 A- in the slots in both camshafts.

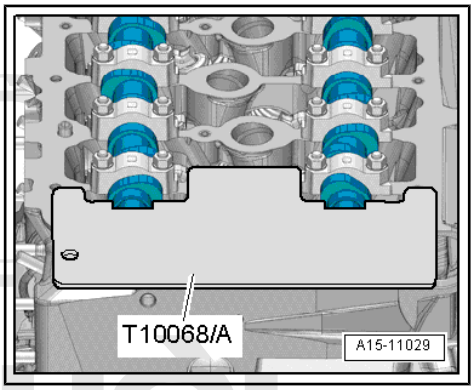

Note

It may be necessary to turn the camshafts back and forth slightly using a 24 mm open-end spanner. The camshaft bar - T10068 A- must not be in place when doing this.

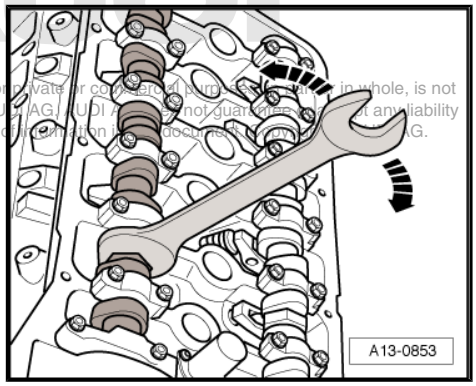

Protected by copyright. Copying for private or commercial purposes, in whole, is not permitted unless authorised by AUDI AG. AUDI AG does not guarantee or assume any liability with respect to the correctness of information in this document. Copyright by AUDI AG.

– Remove camshaft bar - T10068 A- from both cylinder heads.

– Remove locking pin - 3242- .

– Tighten plug for “TDC” marking ⇒ page 95 .

Remaining installation steps are carried out in reverse sequence; note the following:

– Install timing chain covers ⇒ page 89 .

– Install cylinder head covers ⇒ page 127 .

– Install drive plate ⇒ page 76 .

Tightening torques

♦ ⇒ “2.1 Exploded view - camshaft timing chains”, page 93

2.5 Removing and installing drive chain for valve gear

Special tools and workshop equipment required

- Locking pin -T03006-

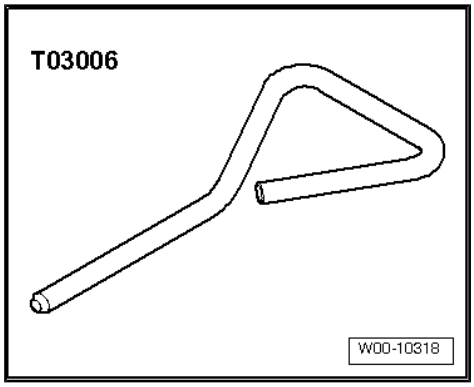

Removing

- Gearbox removed ⇒ Rep. gr. 37 ; Removing and installing gearbox; Removing gearbox .
- Remove camshaft timing chains (left and right) ⇒ page 105 .
- Remove bolt -arrow-.

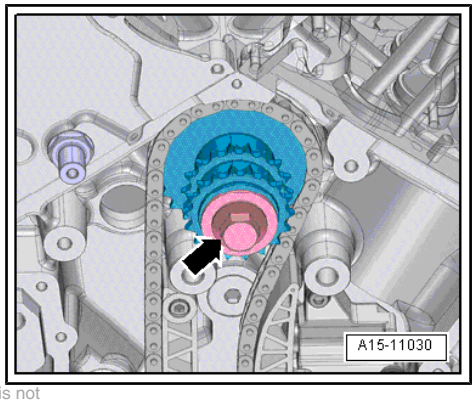

> **Caution**
>
> *If a used drive chain rotates in the opposite direction when it is refitted, this can cause breakage.*
>
> - *Mark running direction of drive chain with coloured arrows for re-installation.*

Copyright by AUDI AG. Any reproduction or distribution, in whole or in parts, is not authorised by AUDI AG. AUDI AG does not guarantee or accept any liability with respect to the correctness of information in this document. Copyright by AUDI AG.

- Press down chain tensioner -5- for drive chain and lock in place using locking pin -T03006- .
- Remove bolts -4- and take off chain tensioner and gasket underneath.
- Pull guide rail -1- off mounting pins.
- Pull out bearing pin -2- and detach chain sprocket for camshaft drive -3-.

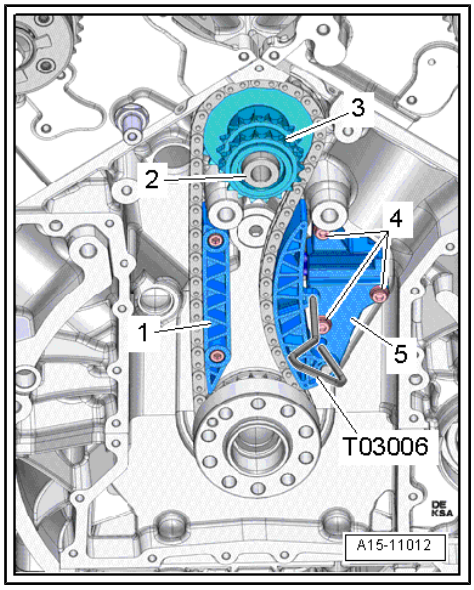

Installing

- Crankshaft locked in “TDC” position with locking pin - 3242- .

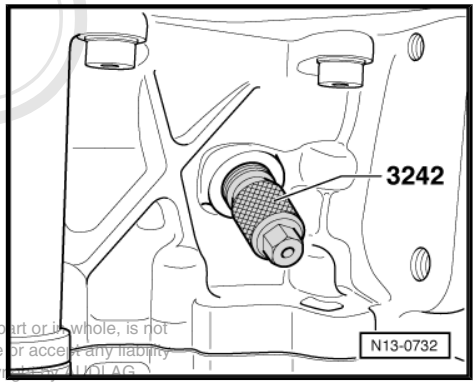

Note

Renew gasket.

Protected by copyright. Copying for private or commercial purposes, in part or in whole, is not permitted unless authorised by AUDI AG. AUDI AG does not guarantee or accept any liability with respect to the correctness of information in this document. Copyright by AUDI AG.

– Fit drive chain onto crankshaft chain sprocket and camshaft drive chain sprocket (according to markings made during removal).

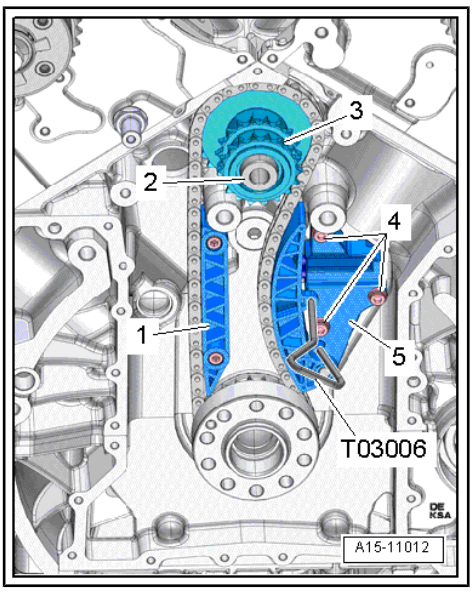

Note

Position of copper-coloured chain links can be disregarded.

– When attaching camshaft drive chain sprocket -3-, insert bearing pin -2- into sprocket and cylinder block.
– Position guide rail -1- on mounting pins.
– Fit gasket for chain tensioner -5-.
– Tighten bolts -4- for chain tensioner.
– Pull out locking pin -T03006- to release chain tensioner.

Remaining installation steps are carried out in reverse sequence; note the following:

– Install camshaft timing chains ⇒ page 105 .

Tightening torques

♦ ⇒ “2.2 Exploded view - drive chain for valve gear”, page 96

3 Cylinder head

⇒ “3.1 Exploded view - cylinder head”, page 116
⇒ “3.2 Removing and installing cylinder head”, page 119
⇒ “3.3 Removing and installing cylinder head cover”, page 127
⇒ “3.4 Checking compression”, page 131

3.1 Exploded view - cylinder head

Note

Illustration shows the cylinder head for cylinder bank 1 (right-side).

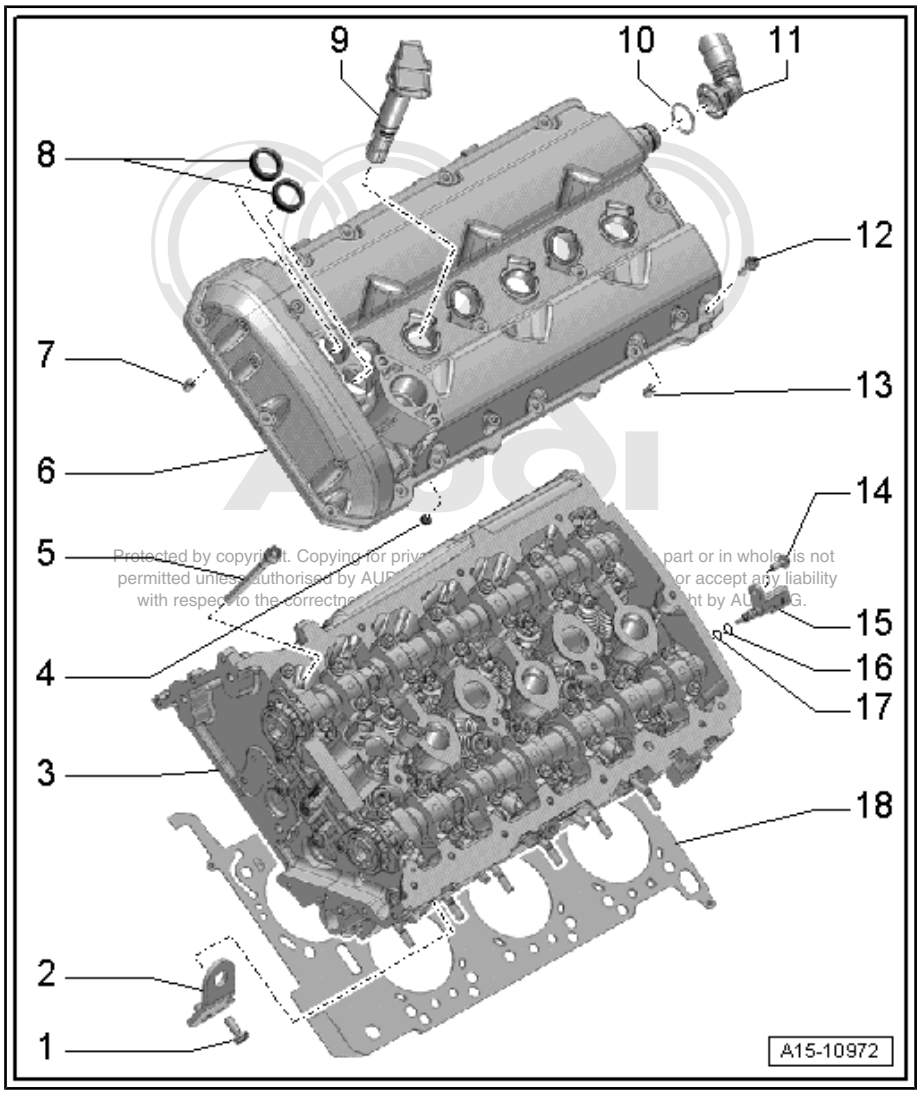

1 - Bolt
- ❑ 23 Nm

2 - Engine lifting eye

3 - Cylinder head
- ❑ Removing and installing ⇒ page 119
- ❑ Checking for distortion ⇒ page 117
- ❑ If renewed, change coolant and engine oil

4 - Sealing sleeve
- ❑ Inserted into cylinder head cover
- ❑ Renew

5 - Bolt
- ❑ Renew
- ❑ Different lengths; long bolts for centre line of holes
- ❑ Note correct sequence when loosening: cylinder head (right-side) ⇒ page 120 , cylinder head (left-side) ⇒ page 121
- ❑ Tightening torque and tightening sequence: cylinder head (right-side) ⇒ page 119 , cylinder head (left-side) ⇒ page 118

6 - Cylinder head cover
- ❑ Removing and installing ⇒ page 127

7 - Dowel sleeve
- ❑ Insert into cylinder head
- ❑ Renew

8 - Seals
- ❑ Renew if damaged or leaking

9 - Ignition coil

- ❑ Removing and installing ⇒ page 313

10 - O-ring

- ❑ Renew

11 - Crankcase breather pipe

12 - Bolt

- ❑ Renew aluminium bolts
- ❑ Tightening torque and tightening sequence: cylinder head cover (left-side) ⇒ page 118 , cylinder head cover (right-side) ⇒ page 118

13 - Dowel sleeve

- ❑ Renew
- ❑ Insert into cylinder head

14 - Bolt

- ❑ Tightening torque ⇒ Item 1 (page 206)

15 - Coolant temperature sender - G62-

- ❑ Removing and installing ⇒ page 204

16 - O-ring

- ❑ Renew

17 - Support ring

18 - Cylinder head gasket

- ❑ Allocation ⇒ Electronic parts catalogue
- ❑ Renewing ⇒ “3.2 Removing and installing cylinder head”, page 119
- ❑ Installation position: part number must face cylinder head
- ❑ If renewed, change coolant and engine oil

Checking cylinder head for distortion

– Use straight edge 500 mm - VAS 6075- and feeler gauge to measure cylinder head for distortion at several points.

• Max. permissible distortion: 0.05 mm

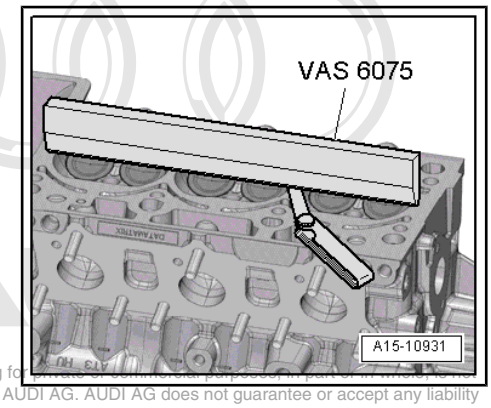

Protected by copyright. Copying for commercial purposes, in part or in whole, is not permitted unless authorised by AUDI AG. AUDI AG does not guarantee or accept any liability with respect to the correctness of information in this document. Copyright by AUDI AG.

Cylinder head cover (left-side) - tightening torque and sequence

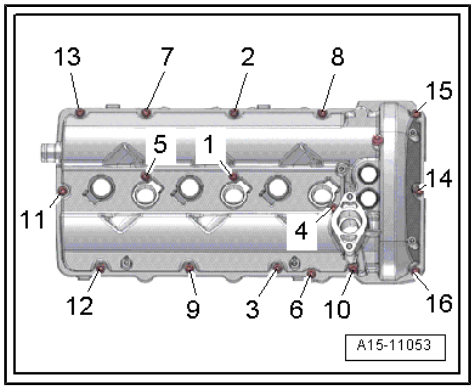

Note

Renew aluminium bolts -14, 15, 16- tightened to a specified tightening angle.

– Tighten bolts in 3 stages in the sequence shown:

Stage	Bolts	Tightening torque/angle specification
1.	-1 … 13-	8 Nm
2.	-14, 15, 16-	4 Nm
3.	-14, 15, 16-	Turn 90° further

Cylinder head cover (right-side) - tightening torque and sequence

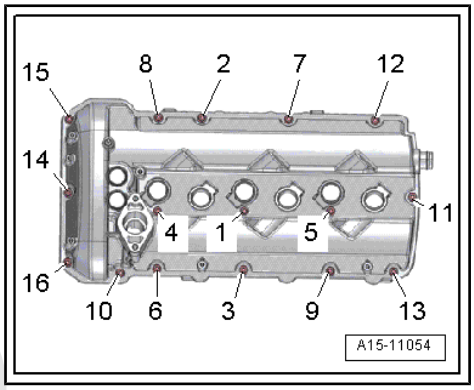

Note

Renew aluminium bolts -14, 15, 16- tightened to a specified tightening angle.

– Tighten bolts in 3 stages in the sequence shown:

Stage	Bolts	Tightening torque/angle specification
1.	-1 … 13-	8 Nm
2.	-14, 15, 16-	4 Nm
3.	-14, 15, 16-	Turn 90° further

Cylinder head (left-side) - tightening torque and sequence

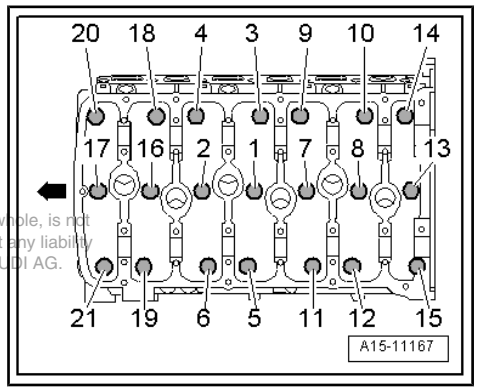

Note

Renew the bolts tightened with specified tightening angle.

– Tighten bolts in 4 stages in the sequence shown:

Protected by copyright. Copying for private or commercial purposes, in part or in whole, is not permitted unless authorised by AUDI AG. AUDI AG does not guarantee or accept any liability with respect to the correctness of information in this document. Copyright by AUDI AG.

Stage	Bolts	Tightening torque/angle specification
1.	-1 … 21-	23 Nm
2.	-1 … 21-	37 Nm
3.	-1 … 21-	Turn 90° further
4.	-1 … 21-	Turn 90° further

Cylinder head (right-side) - tightening torque and sequence

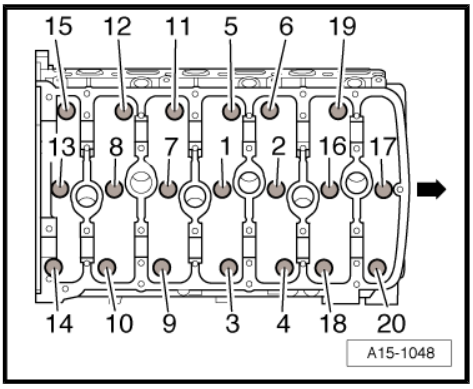

Note

Renew the bolts tightened with specified tightening angle.

– Tighten bolts in 4 stages in the sequence shown:

Stage	Bolts	Tightening torque/angle specification
1.	-1 … 20-	23 Nm
2.	-1 … 20-	37 Nm
3.	-1 … 20-	Turn 90° further
4.	-1 … 20-	Turn 90° further

3.2 Removing and installing cylinder head

Removing

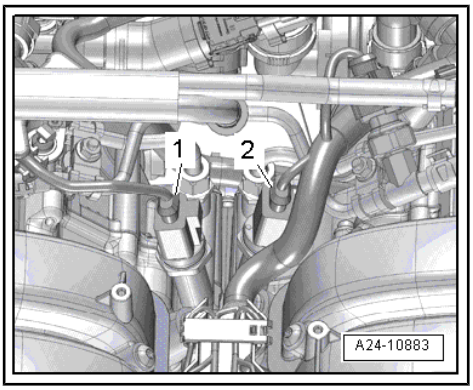

– Remove thermostat housing ⇒ page 202 .

– Remove timing chain from camshafts on relevant side ⇒ page 96 .

– Unplug electrical connector -1- for fuel pressure sender - G247- / electrical connector -2- for fuel pressure sender 2 - G624- .

– Unplug electrical connectors at injectors.

Cylinder bank 1 (right-side):

– Remove exhaust manifolds (right-side) with catalytic converters from cylinder head ⇒ “3.2 Renewing exhaust manifold gaskets”, page 301 .

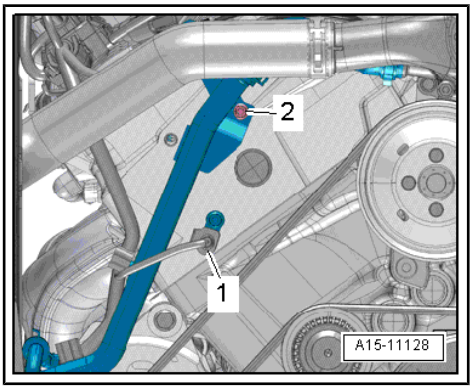

– Unplug electrical connector -1- at coolant temperature sender - G62- .

– Unscrew bolt -2- from coolant pipe (front right).

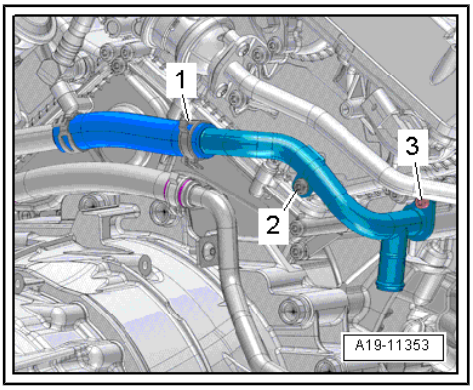

– Unscrew bolt -3- from coolant pipe (rear right).

Note

Disregard -items 1, 2-.

Protected by copyright. Copying for private or commercial purposes, in part or in whole, is not permitted unless authorised by AUDI AG. AUDI AG does not guarantee or accept any liability with respect to the correctness of information in this document. Copyright by AUDI AG.

– Slacken cylinder head bolts in the sequence -1 ... 20-.

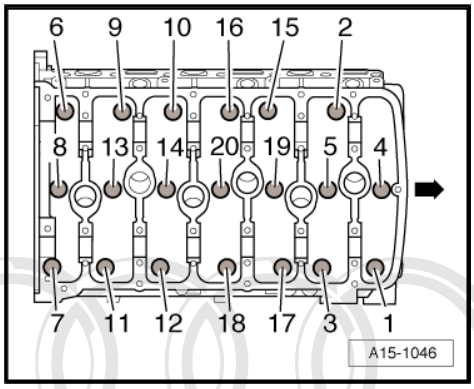

Note

The -arrow- points in direction of travel.

– Remove camshaft bar - T10068 A- .

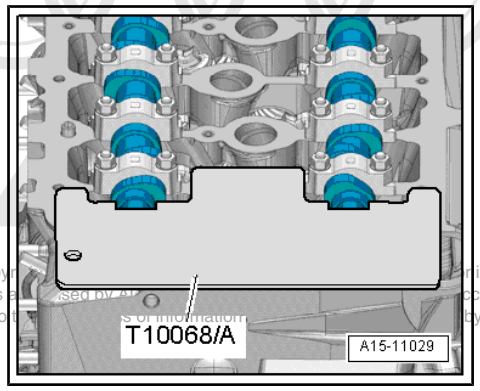

Protected by copy
permitted unless
with respect to
in whole, is not
cept any liability
by AUDI AG.

Note

Exhaust camshaft must be turned before bolt -7- for cylinder head can be removed.

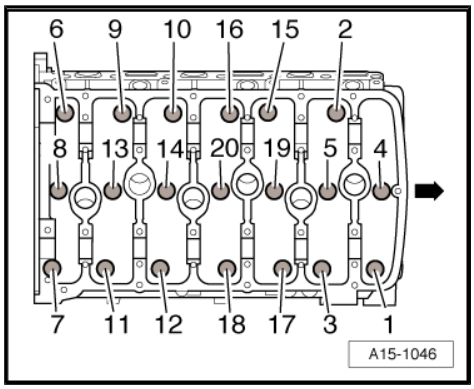

– Apply 24 mm open-end spanner to hexagon flats of exhaust camshaft -1- and turn max. 30° in direction of engine rotation.

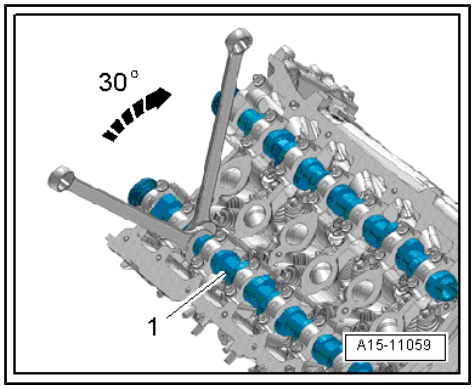

Caution

Risk of damage to exhaust camshaft.

- ***Make sure bolt -7- ⇒ page 120 is not wedged in when turning the exhaust camshaft.***

– Pull out bolt -7-; to do so, slightly turn exhaust camshaft back and forth so that bolt can be guided out between cam for roller rocker finger and cam for high-pressure pump.

– Turn exhaust camshaft back to “TDC” position.

– Lock camshafts in “TDC” position with camshaft bar - T10068 A- .
– Take off cylinder head carefully; at the same time disconnect coolant pipe (rear right)
– Place cylinder head onto soft surface (foam plastic).

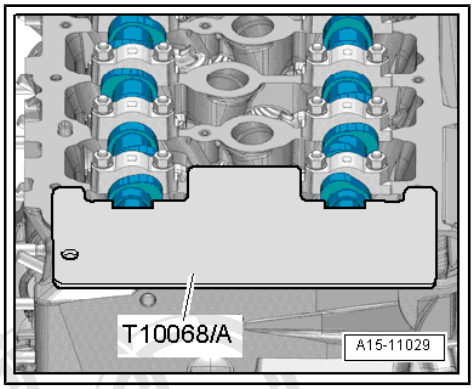

Cylinder bank 2 (left-side):

– Remove exhaust manifolds (left-side) with catalytic converters from cylinder head
⇒ “3.2 Renewing exhaust manifold gaskets”, page 301 .
– Remove bolt -arrow- for guide rail.

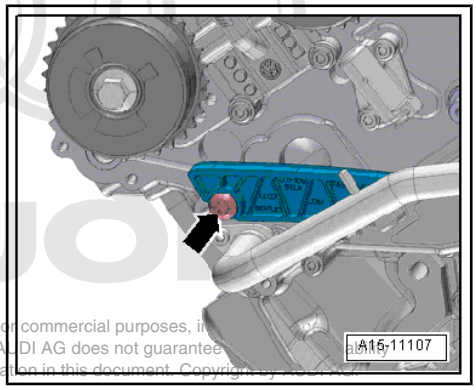

Protected by copyright. Copying for private or commercial purposes, in part or in whole, is not permitted unless authorised by AUDI AG. AUDI AG does not guarantee or assume any liability with respect to the correctness of information in this document. Copyright by AUDI AG.

– Slacken cylinder head bolts in the sequence -1 ... 21-.

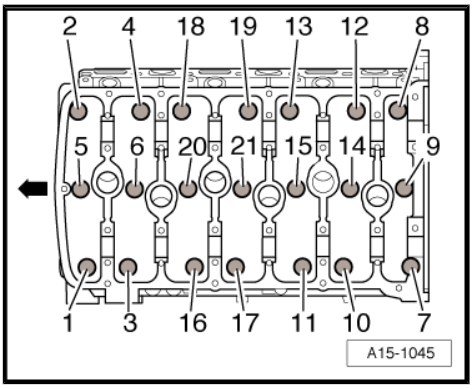

Note

The -arrow- points in direction of travel.

– Remove camshaft bar - T10068 A- .

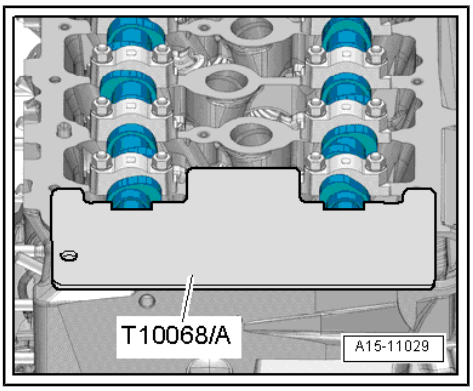

Note

Camshafts must be turned before bolts -1, 3, 7, 13 and 19- for cylinder head can be removed.

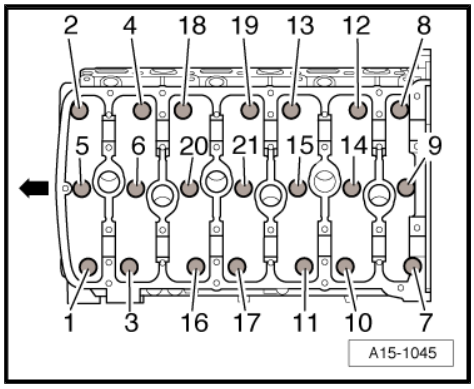

- Apply 24 mm open-end spanner to hexagon flats of exhaust camshaft -1- and turn max. 30° in direction of engine rotation.
- Pull out bolt -7- ⇒ page 122 .
- Turn exhaust camshaft back to "TDC" position.
- Now turn 24 mm open-end spanner max. 30° in opposite direction of engine rotation.
- Pull out bolts -1 and 3-.
- Turn exhaust camshaft back to "TDC" position.

Protected by copyright. Copying for private or commercial purposes, in part or in whole, is not permitted unless authorised by AUDI AG. AUDI AG does not guarantee or accept any liability with respect to the correctness of information in this document. Copyright by AUDI AG.

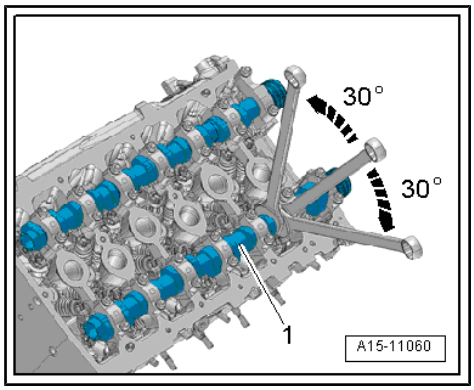

- Apply 24 mm open-end spanner to hexagon flats of inlet camshaft -1- and turn max. 45° in direction of engine rotation.
- Pull out bolts -13 and 19- ⇒ page 122 .
- Turn inlet camshaft back to "TDC" position.

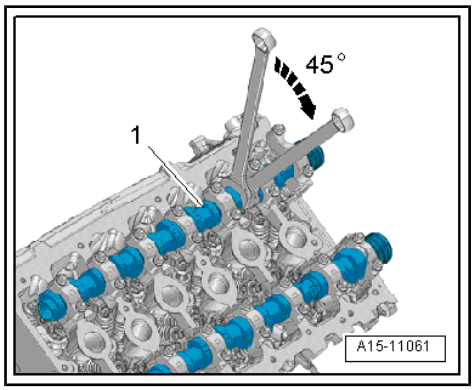

- Lock camshafts in "TDC" position with camshaft bar - T10068 A- .

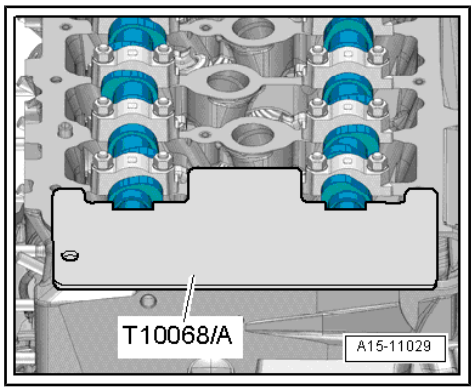

– Unscrew bolts -arrows- and detach chain tensioner.

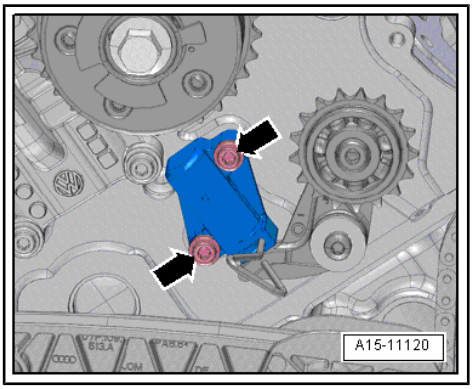

Note

By removing the chain tensioner, you can prevent the locking pin -T03006- from getting caught in the camshaft timing chain when the cylinder head is removed.

– Carefully take off cylinder head and set it down on a soft surface (foam plastic).

Installing

Caution

Avoid damage to sealing surfaces.

- *Carefully remove sealant residue from cylinder head and cylinder block.*
- *Ensure that no long scores or scratches are made on the surfaces.*

Avoid damage to cylinder block.

- *No oil or coolant must be allowed to remain in the blind holes for the cylinder head bolts in the cylinder block.*

Risk of leaks at cylinder head gasket.

- *Carefully remove any sealant residue from the cylinder head and cylinder block. Ensure that no long scores or scratches are made on the surfaces.*
- *Carefully remove any remaining emery and abrasive material.*
- *Do not remove new cylinder head gasket from packaging until it is ready to be fitted.*
- *Handle the cylinder head gasket very carefully to prevent damage to the silicone coating or the indented area of the gasket.*

Avoid damage to open valves.

- *When installing an exchange cylinder head, the plastic protectors fitted to protect the open valves should not be removed until the cylinder head is ready to be fitted.*

Avoid damage to valves and piston crowns after working on valve gear.

- *Turn the engine carefully at least 2 rotations to ensure that none of the valves make contact when the starter is operated.*

Protected by copyright. Copying for private or commercial purposes, in part or in whole, is not permitted unless authorised by AUDI AG. AUDI AG does not guarantee or accept any liability with respect to the correctness of information in this document. Copyright by AUDI AG.

Note

- *Renew the bolts tightened with specified tightening angle.*
- *Renew gaskets, seals and O-rings.*
- *When installing an exchange cylinder head, the contact surfaces between the hydraulic compensation elements, roller rocker fingers and cams must be oiled before installing the cylinder head cover.*
- *Secure all hose connections with the correct type of hose clips (same as original equipment) ⇒ Electronic parts catalogue .*
- *After fitting a new cylinder head or cylinder head gasket, change the engine oil and the coolant in the entire cooling system.*

– Before installing cylinder heads, set crankshaft and camshafts to “TDC”:

• Camshafts on both cylinder heads locked in “TDC” position with camshaft bar - T10068 A- .

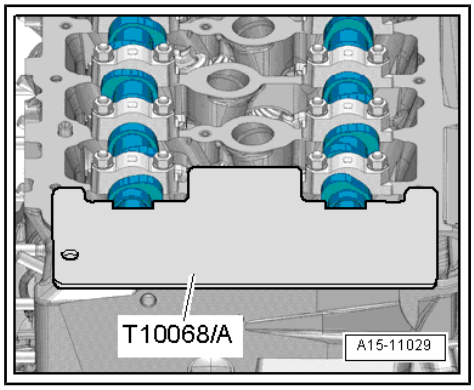

• Locking pin - 3242- screwed in.

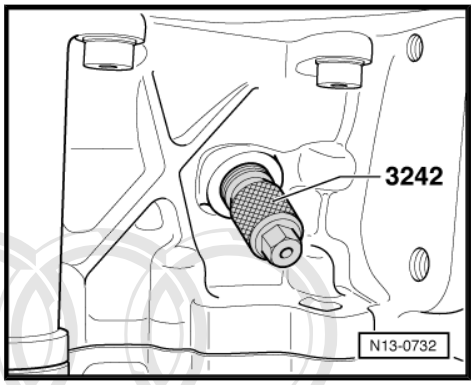

– Check that dowel sleeves -arrows- are inserted in cylinder block at positions indicated.

– Fit cylinder head gasket onto dowel sleeves in cylinder block.

• Installation position of cylinder head gasket: the word “oben” (top) or the part number should face towards the cylinder head.

– Fit cylinder head; when fitting cylinder head (right-side) guide coolant pipe (rear right) into cylinder head.

• Allocation: long bolts are screwed into centre line of holes.

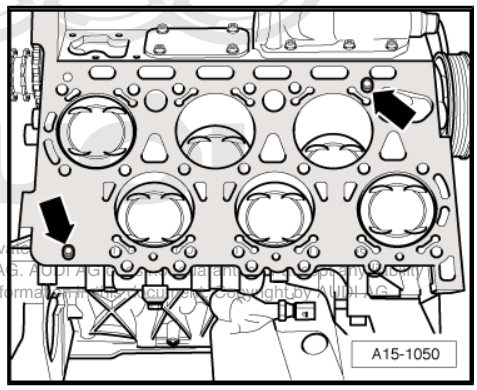

Protected by copyright. Copying for private or commercial purposes, in part or in whole, is not permitted unless authorised by AUDI AG. AUDI AG does not guarantee or assume any liability with respect to the correctness of information. All rights reserved by AUDI AG.

Cylinder bank 1 (right-side):

– Remove camshaft bar - T10068 A- .

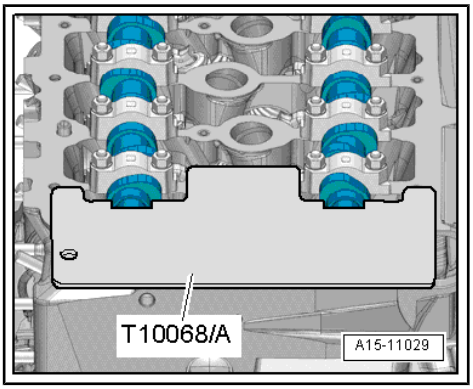

Note

- *Exhaust camshaft must be turned before bolt -7- for cylinder head can be inserted.*
- *The -arrow- points in direction of travel.*

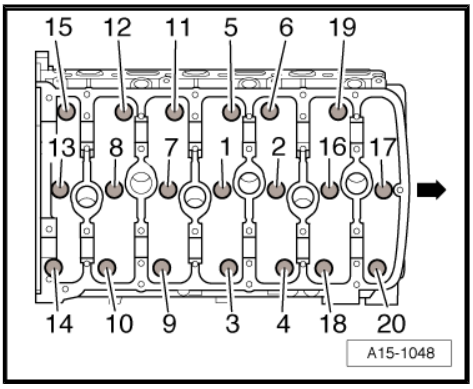

– Apply 24 mm open-end spanner to hexagon flats of exhaust camshaft -1- and turn max. 30° in direction of engine rotation.

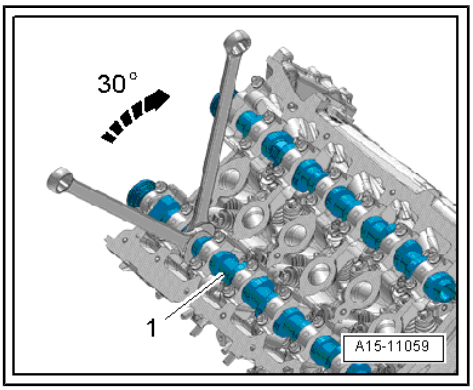

Caution

Risk of damage to exhaust camshaft.

- *Make sure bolt -7- ⇒ page 125 is not wedged in when turning the exhaust camshaft.*

Protected by copyright. Copying for private or commercial purposes, in part or in whole, is not permitted unless authorised by AUDI AG. AUDI AG does not guarantee or accept any liability with respect to the correctness of information in this document. Copyright by AUDI AG.

– Insert bolt -7-; to do so, slightly turn exhaust camshaft back and forth so that bolt can be inserted between cam for roller rocker finger and cam for high-pressure pump.

– Turn exhaust camshaft back to “TDC” position.

– Re-insert camshaft bar - T10068 A- .

– Tighten cylinder head bolts ⇒ page 119 .

Cylinder bank 2 (left-side):

– Remove camshaft bar - T10068 A- .

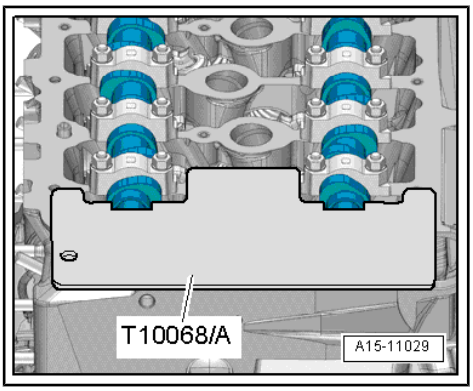

Note

- *Camshafts must be turned before bolts -1, 3, 7, 13 and 19- for cylinder head can be inserted.*
- *The -arrow- points in direction of travel.*

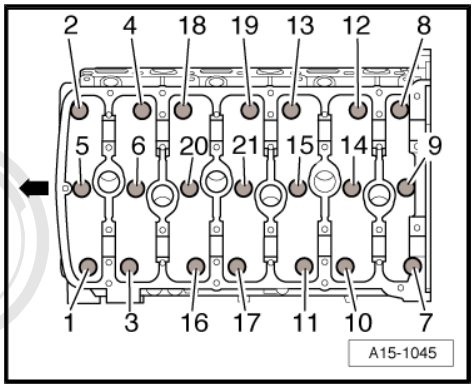

- Apply 24 mm open-end spanner to hexagon flats of exhaust camshaft -1- and turn max. 30° in direction of engine rotation.
- Insert bolt -7- ⇒ page 126 .
- Turn exhaust camshaft back to “TDC” position.
- Now turn 24 mm open-end spanner max. 30° in opposite direction of engine rotation.
- Insert bolts -1, 3-.
- Turn exhaust camshaft back to “TDC” position.

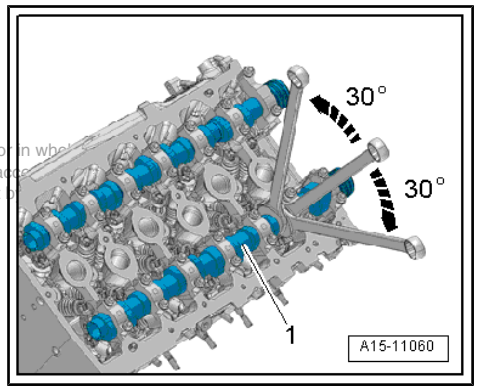

Protected by copyright. Copying for private or commercial purposes, in part or in whole, is not permitted unless authorised by AUDI AG. AUDI AG does not guarantee or accept any liability with respect to the correctness of information in this document. Copyright by AUDI AG.

- Apply 24 mm open-end spanner to hexagon flats of inlet camshaft -1- and turn max. 45° in direction of engine rotation.
- Insert bolts -13, 19- ⇒ page 126 .
- Turn inlet camshaft back to “TDC” position.
- Re-insert camshaft bar - T10068 A- .
- Tighten cylinder head bolts ⇒ page 118 .

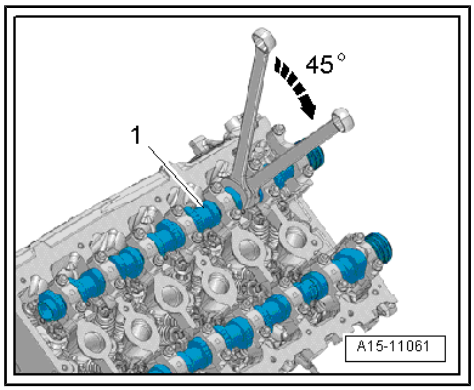

Continued for both cylinder banks:

Note

Cylinder head bolts do not have to be torqued down again later after repair work.

- Install exhaust manifolds with catalytic converters ⇒ “3.2 Renewing exhaust manifold gaskets”, page 301 .
- Secure coolant pipe (front right) ⇒ “3.1 Exploded view - coolant pipes”, page 206 .
- Install coolant pipe (rear right) ⇒ page 210 .
- Electrical connections and routing ⇒ Current flow diagrams, Electrical fault finding and Fitting locations.
- Install camshaft timing chains ⇒ page 96 .
- Install thermostat housing ⇒ page 202 .

Tightening torques

- ⇒ Fig. ““Cylinder head (left-side) - tightening torque and sequence”“ , page 118
- ⇒ Fig. ““Cylinder head (right-side) - tightening torque and sequence”“ , page 119

3.3 Removing and installing cylinder head cover

Special tools and workshop equipment required

- Electric drill with plastic brush
- Safety goggles
- Sealant ⇒ Electronic parts catalogue

Removing

– Remove corresponding air cleaner housing ⇒ page 245 .

– Remove corresponding ignition coils ⇒ page 313 .

– Remove corresponding high-pressure pump ⇒ page 265 .

– Remove corresponding high-pressure pipe ⇒ page 270 .

– Remove bolts -arrows- and push corresponding bracket -1- with electrical wiring to one side.

Reproduction or distribution, even in part, is not permitted unless authorised by AUDI AG. AUDI AG does not guarantee or accept any liability with respect to the correctness of information in this document. Copyright by AUDI AG.

Cylinder bank 1 (right-side):

– Remove bolt -2- for coolant pipes.

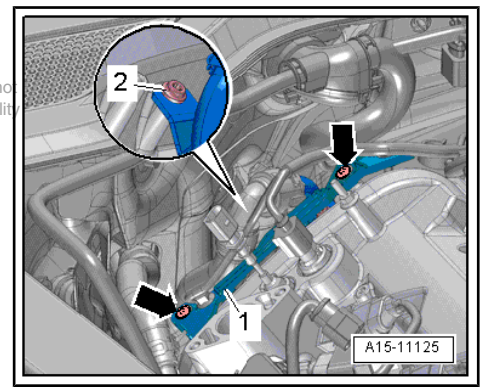

– Unplug connector -1- for camshaft control valve 1 - N205- and connector -3- for exhaust camshaft control valve 1 - N318- .

– Detach electrical connectors -2 and 4- from bracket and unplug.

– Remove bolts -arrows- and push wiring duct to the side.

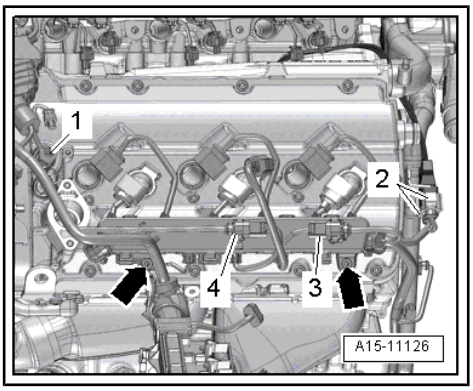

– Slacken cylinder head cover bolts in the sequence -16 ... 1- and remove.

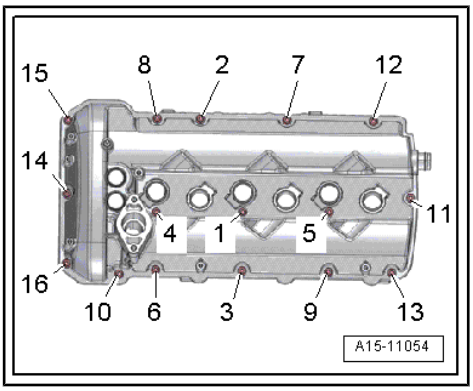

Cylinder bank 2 (left-side):

– Unplug electrical connector -2- for camshaft control valve 2 - N208- .

– Unplug electrical connector -1- for exhaust camshaft control valve 2 - N319- .

– Remove bolts -arrows- and push wiring duct to the side.

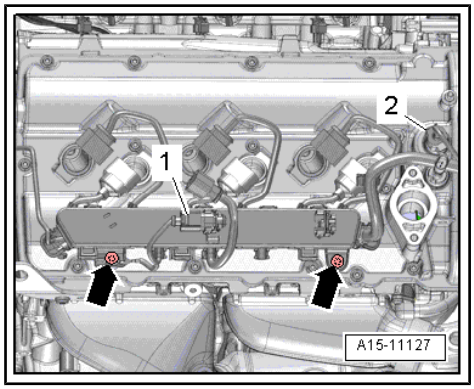

– Detach insulation.

– Remove bolt -arrow- and detach engine lifting eye.

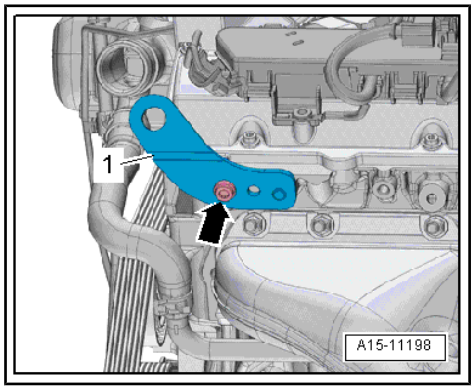

– Slacken cylinder head cover bolts in the sequence -16 ... 1- and remove.

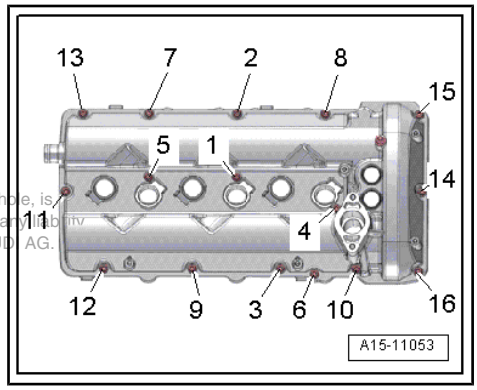

Protected by copyright. Copying for private or commercial purposes, in part or in whole, is not permitted unless authorised by AUDI AG. AUDI AG does not guarantee or accept any liability with respect to the correctness of information in this document. Copyright by AUDI AG.

Continuation for both sides:

– Carefully release cylinder head cover from bonded joint; to do so, apply screwdriver at lugs of casting -arrows-.

– Detach cylinder head cover.

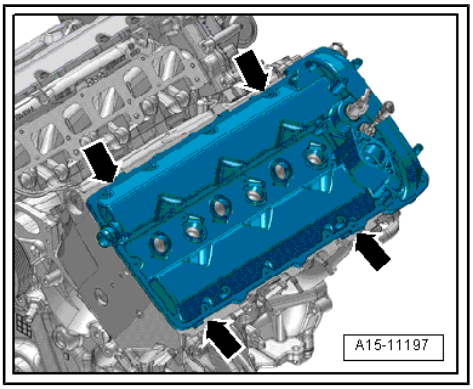

Installing

Installation is carried out in the reverse order; note the following:

Note

- *Renew aluminium bolts.*
- *Renew sealing sleeve and seals for camshaft control valves.*
- *Renew bolts for cylinder head cover if seals on bolts are damaged.*

Caution

Protect lubrication system and bearings against contamination.

- ***Cover exposed parts of the engine.***

– Remove old sealant from grooves in cylinder head cover and from sealing surfaces.

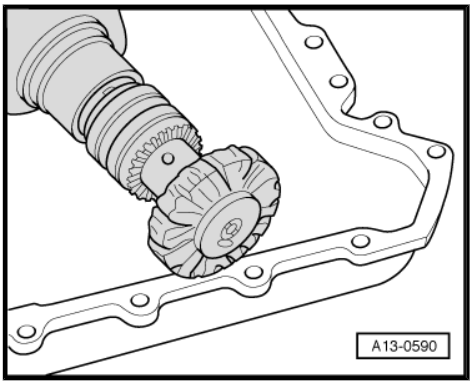

WARNING

Risk of eye injury.

- ***Wear safety goggles.***

– Remove remaining sealant from cylinder head cover and cylinder head using rotating plastic brush or similar.

– Clean surfaces; they must be free of oil and grease.

– Check that dowel sleeves -arrows- are inserted in cylinder head at positions indicated.

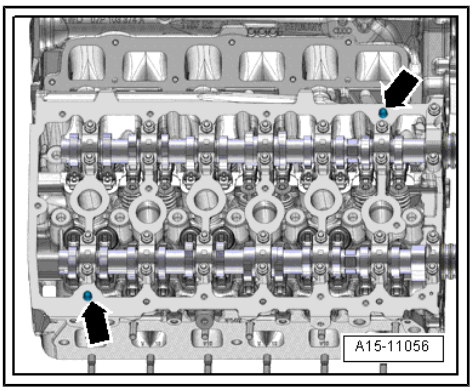

Protected by copyright. Copying for private or commercial purposes, in part or in whole, is not permitted unless authorised by AUDI AG. AUDI AG does not guarantee or accept any liability with respect to the correctness of information in this document. Copyright by AUDI AG.

– Insert sealing sleeve -2- in hole in cylinder head cover.
– Fit seals -1- for camshaft control valves.

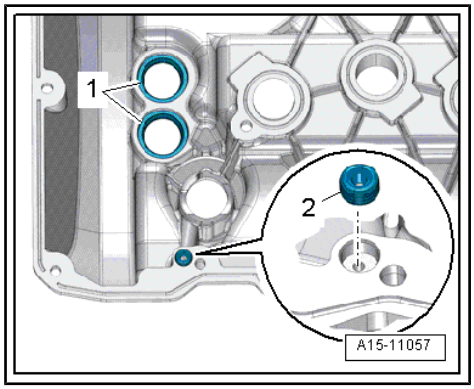

Note

Note the use-by date of the sealant.

– Cut off nozzle of tube at front marking (nozzle ∅ approx. 2.0 mm).

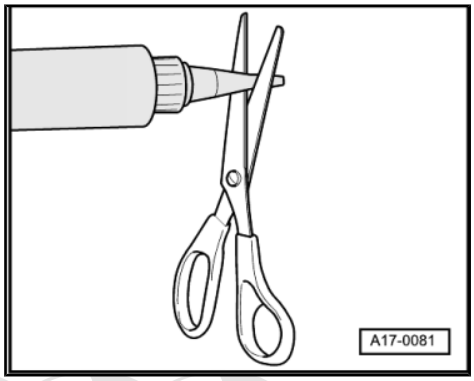

Caution

Make sure lubrication system is not clogged by excess sealant.

- ***The bead of sealant must not be thicker than specified.***

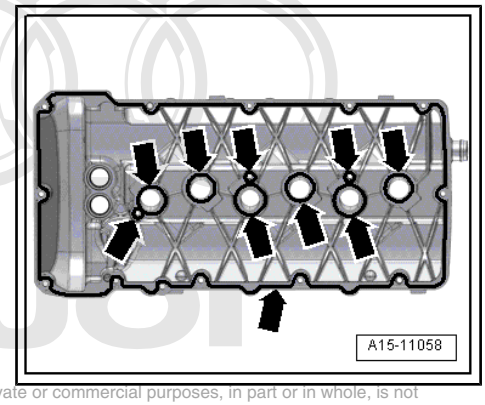

– Apply beads of sealant -arrows- onto sealing surface of cylinder head cover as shown in illustration.

- Width of sealant bead: 2.5 mm.

Protected by copyright. Copying for private or commercial purposes, in part or in whole, is not permitted unless authorised by AUDI AG. AUDI AG does not guarantee or accept any liability with respect to the correctness of information in this document. Copyright by AUDI AG.

Note

The cylinder head cover must be installed within 5 minutes after applying the sealant.

– Fit cylinder head cover on cylinder bank 1 (right-side) and tighten bolts ⇒ page 118 .

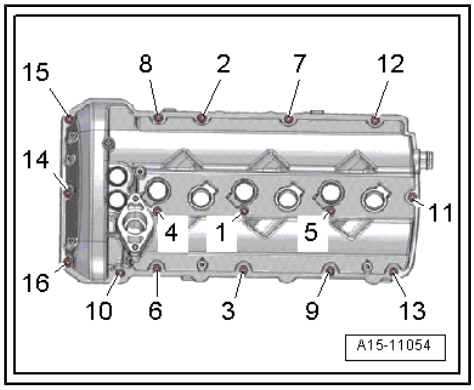

– Fit cylinder head cover on cylinder bank 2 (left-side) and tighten bolts ⇒ page 118 .
– Install refrigerant line with internal heat exchanger ⇒ Heating, air conditioning; Rep. gr. 87 ; Refrigerant circuit; Removing and installing refrigerant lines with internal heat exchanger .
– Install high-pressure pipe ⇒ page 270 .
– Install high-pressure pump ⇒ page 265 .
– Install ignition coils with ignition harness ⇒ page 313 ⇒ page 313 .
– Install air cleaner housing ⇒ page 245 .

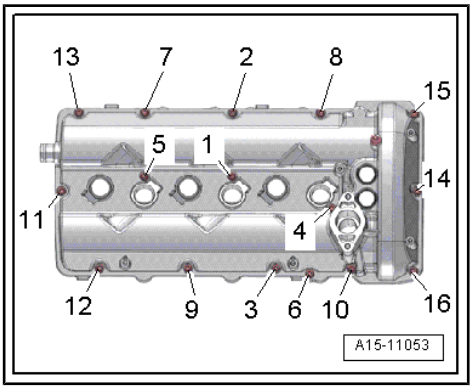

Tightening torques

- ⇒ Fig. ""Cylinder head cover (left-side) - tightening torque and sequence"" , page 118
- ⇒ Fig. ""Cylinder head cover (right-side) - tightening torque and sequence"" , page 118

3.4 Checking compression

Special tools and workshop equipment required

- Spark plug socket and extension - 3122 B-

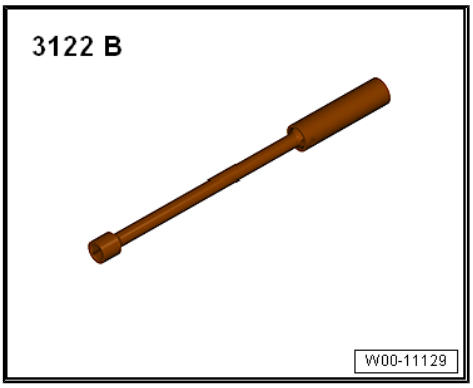

- Compression tester - V.A.G 1763-

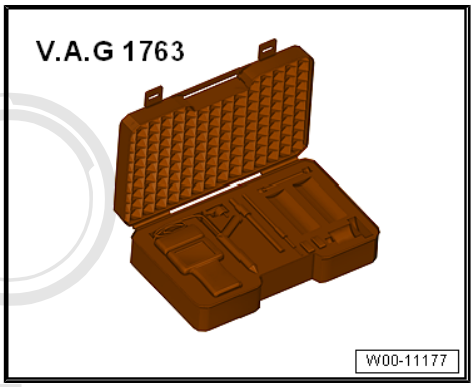

Procedure

- Engine oil temperature at least 30 °C.
- Battery voltage at least 12.5 V.

Protected by copyright. Copying for private or commercial purposes, in part or in whole, is not permitted unless authorised by AUDI AG. AUDI AG does not guarantee or accept any liability with respect to the correctness of information in this document. Copyright by AUDI AG.

– Remove ignition coils ⇒ page 313 .
– Release and unplug electrical connectors at injectors.
– Remove spark plugs with spark plug socket and extension - 3122 B- .
– Check compression pressure with compression tester - V.A.G 1763- .

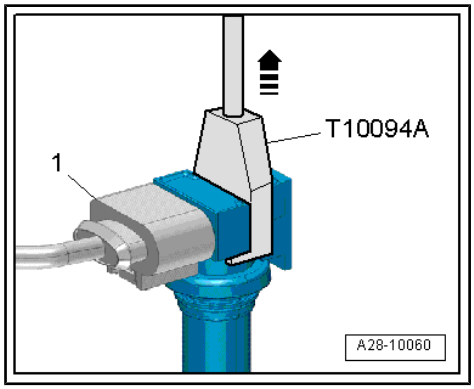

Note

Using the compression tester ⇒ Operating instructions .

– Have a second mechanic operate starter until tester shows no further pressure increase.
– Repeat procedure on each cylinder.

Compression pressure	bar
When new	11.0 … 13.0
Wear limit	10.0
Maximum difference between cylinders	3.0

– Install spark plugs ⇒ Maintenance ; Booklet 410 .
– Install ignition coils ⇒ page 313 .
– Entries are stored in the event memory of the engine control units because electrical connectors have been unplugged and engine started: `Generate readiness code` in `Guided Functions` ⇒ Vehicle diagnostic tester .

Protected by copyright. Copying for private or commercial purposes, in part or in whole, is not permitted unless authorised by AUDI AG. AUDI AG does not guarantee or accept any liability with respect to the correctness of information in this document. Copyright by AUDI AG.

4 Valve gear

⇒ "4.1 Exploded view - valve gear", page 133
⇒ "4.2 Measuring axial clearance of camshaft", page 137
⇒ "4.3 Measuring radial clearance of camshaft", page 138
⇒ "4.4 Removing and installing camshaft", page 138
⇒ "4.5 Removing and installing camshaft adjuster", page 147
⇒ "4.6 Removing and installing valve stem oil seals", page 149

4.1 Exploded view - valve gear

Note

- *Cylinder heads which have cracks between the valve seats or between a valve seat insert and the spark plug thread can be re-installed without reducing service life, provided the cracks are only slight and do not exceed a maximum of 0.3 mm in width, and no more than the first 4 turns of the spark plug threads are cracked.*
- *Illustration shows the cylinder head for cylinder bank 1 (right-side).*
- *Lubricate contact surfaces of components when installing.*

1 - Bolt
- ❑ Renew
- ❑ 4 Nm + turn 90° further

2 - Valve timing housing
- ❑ For variable valve timing
- ❑ Removing and installing ⇒ page 148
- ❑ When installing, lightly oil contact surfaces of rectangular section seals

3 - O-rings
- ❑ Renew

4 - Bolt
- ❑ 2.4 Nm

5 - Camshaft control valve
- ❑ Cylinder bank 1 (right-side): camshaft control valve 1 - N205-
- ❑ Cylinder bank 2 (left-side): camshaft control valve 2 - N208-

6 - Exhaust camshaft control valve
- ❑ Cylinder bank 1 (right-side): exhaust camshaft control valve 1 - N318-
- ❑ Cylinder bank 2 (left-side): exhaust camshaft control valve 2 - N319-

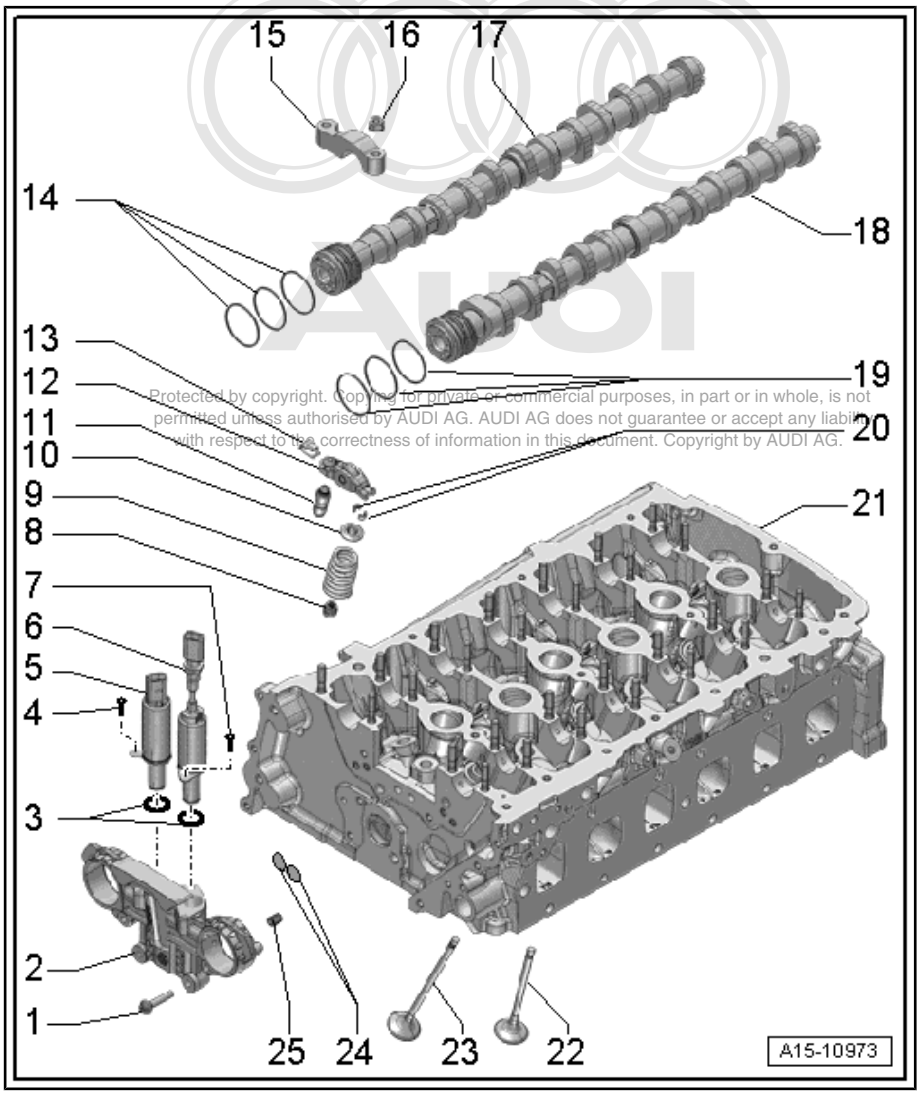

Protected by copyright. Copying for private or commercial purposes, in part or in whole, is not permitted unless authorised by AUDI AG. AUDI AG does not guarantee or accept any liability with respect to the correctness of information in this document. Copyright by AUDI AG.

7 - Bolt

- ❑ 2.4 Nm

8 - Valve stem oil seal

- ❑ Removing and installing ⇒ page 149

9 - Valve spring

- ❑ Installation position ⇒ page 137

10 - Valve spring plate

11 - Hydraulic valve compensation element

- ❑ Clipped into roller rocker finger -item 12-
- ❑ Mark installation position for re-installation with a coloured pen

12 - Roller rocker finger

- ❑ Mark installation position for re-installation with a coloured pen
- ❑ Check roller bearings for ease of movement
- ❑ Lubricate contact surface before installing
- ❑ Attach to hydraulic compensation element -item 11- using securing clip -item 13-

13 - Securing clip

- ❑ Not supplied separately
- ❑ Check for firm attachment

14 - Rectangular section seals

- ❑ For camshaft adjuster
- ❑ Offset gaps by 120°
- ❑ Lubricate contact surfaces
- ❑ When inserting, only spread rectangular section seals slightly

Protected by copyright. Copying for private or commercial purposes, in part or in whole, is not permitted unless authorised by AUDI AG. AUDI AG does not guarantee or accept any liability with respect to the correctness of information in this document. Copyright by AUDI AG.

15 - Bearing cap

- ❑ Mark bearing caps “6” and “9”
- ❑ Installation position and tightening sequence for cylinder head 1 (right-side) ⇒ page 136
- ❑ Installation position and tightening sequence for cylinder head 2 (left-side) ⇒ page 136
- ❑ Lubricating outer surfaces of bearing caps for axial bearings ⇒ page 136

16 - Nut

- ❑ Tightening torque and sequence for cylinder head 1 (right-side) ⇒ page 136
- ❑ Tightening torque and sequence for cylinder head 2 (left-side) ⇒ page 136

17 - Inlet camshaft

- ❑ Measuring axial clearance ⇒ page 137
- ❑ Measuring radial clearance ⇒ page 138
- ❑ Runout: max. 0.01 mm
- ❑ Removing and installing ⇒ page 147
- ❑ Identification ⇒ page 135

18 - Exhaust camshaft

- ❑ Measuring axial clearance ⇒ page 137
- ❑ Measuring radial clearance ⇒ page 138
- ❑ Runout: max. 0.01 mm
- ❑ Removing and installing ⇒ page 147
- ❑ Identification ⇒ page 135

19 - Rectangular section seals

- ❑ For camshaft adjuster
- ❑ Offset gaps by 120°
- ❑ Lubricate contact surfaces

- ❑ When inserting, only spread rectangular section seals slightly

20 - Valve cotters

21 - Cylinder head

- ❑ Checking valve guides ⇒ page 157

22 - Exhaust valve

- ❑ Different lengths
- ❑ Mark installation position
- ❑ Must not be machined; only grinding-in is permissible
- ❑ Valve dimensions ⇒ page 158
- ❑ Checking valve guides ⇒ page 157

23 - Inlet valve

- ❑ Different lengths
- ❑ Mark installation position
- ❑ Must not be machined; only grinding-in is permissible
- ❑ Valve dimensions ⇒ page 158
- ❑ Checking valve guides ⇒ page 157

24 - Filters

- ❑ Clean

25 - Dowel sleeve

- ❑ 2x

Identification of camshafts, cylinder bank 1 (right-side)

A - Inlet camshaft; identification 07P - index 102 G

B - Exhaust camshaft; identification 07P - index 104 H

Protected by copyright. Copying for private or commercial purposes, in part or in whole, is not permitted unless authorized by AUDI AG. AUDI AG does not guarantee or accept any liability with respect to the correctness of information in this document. Copyright by AUDI AG.

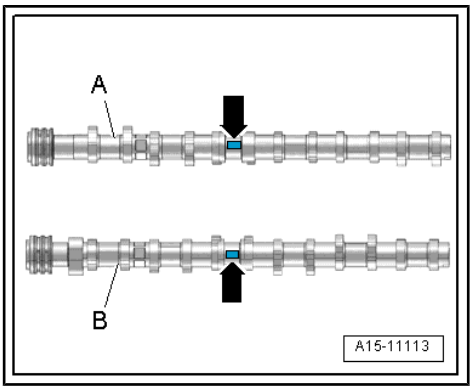

Identification of camshafts, cylinder bank 2 (left-side)

A - Inlet camshaft; identification 07P - index 101 H

B - Exhaust camshaft; identification 07P - index 103 H

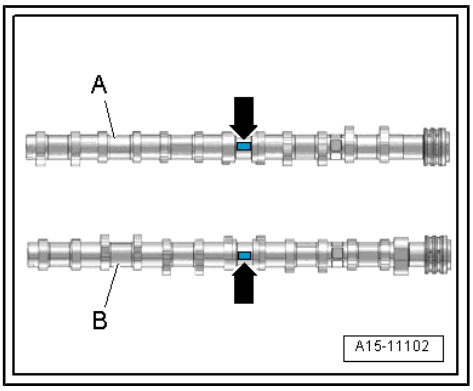

Lubricating outer surfaces of bearing caps for axial bearings

– Lightly coat outside surface -hatched area- of bearing caps “7, 8, 27 and 28” with lubricating paste; for lubricating paste refer to ⇒ Electronic parts catalogue .

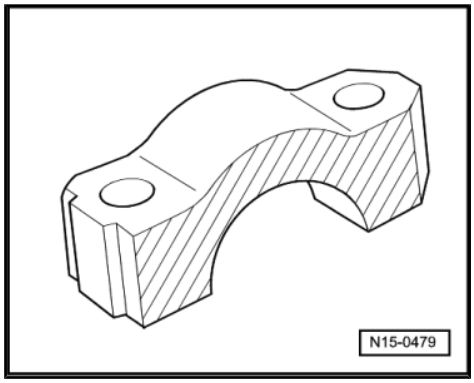

Bearing caps, cylinder bank 1 (right-side) - installation sequence and tightening torque

Protected by copyright. Copying for private or commercial purposes, in part or in whole, is not permitted unless authorised by AUDI AG. AUDI AG does not guarantee or accept any liability with respect to the correctness of information in this document. Copyright by AUDI AG.

Stage	Nuts for bearing cap	Tightening torque/angle specification
Inlet camshaft -A-		
1.	-3, 11-	Screw in by hand until they make contact (alternately and in diagonal sequence)
2.	-3, 11-	5 Nm + turn 45° further
3.	-7-	5 Nm + turn 45° further
4.	-5, 9-	5 Nm + turn 45° further
5.	-1, 13-	5 Nm + turn 45° further
Exhaust camshaft -B-		
6.	-4, 12-	Screw in by hand until they make contact (in diagonal sequence)
7.	-4, 12-	5 Nm + turn 45° further
8.	-8-	5 Nm + turn 45° further
9.	-6, 10-	5 Nm + turn 45° further
10.	-2, 14-	5 Nm + turn 45° further

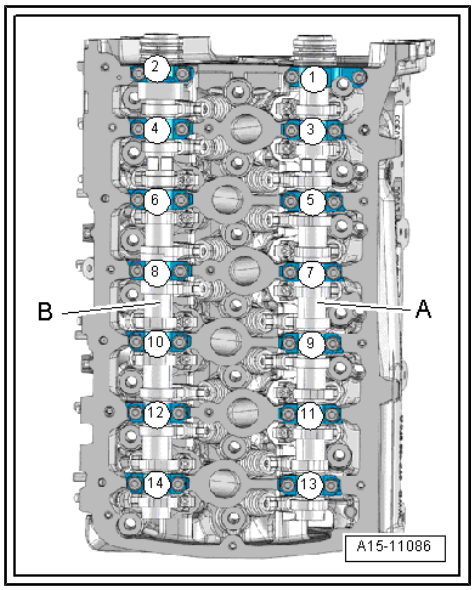

Bearing caps, cylinder bank 2 (left-side) - installation sequence and tightening torque

Stage	Nuts for bearing cap	Tightening torque/angle specification
Inlet camshaft -A-		
1.	-23, 31-	Screw in by hand until they make contact (alternately and in diagonal sequence)
2.	-23, 31-	5 Nm + turn 45° further
3.	-27-	5 Nm + turn 45° further
4.	-25, 29-	5 Nm + turn 45° further
5.	-21, 33-	5 Nm + turn 45° further
Exhaust camshaft -B-		
6.	-24, 32-	Screw in by hand until they make contact (in diagonal sequence)
7.	-24, 32-	5 Nm + turn 45° further
8.	-28-	5 Nm + turn 45° further
9.	-26, 30-	5 Nm + turn 45° further
10.	-22, 34-	5 Nm + turn 45° further

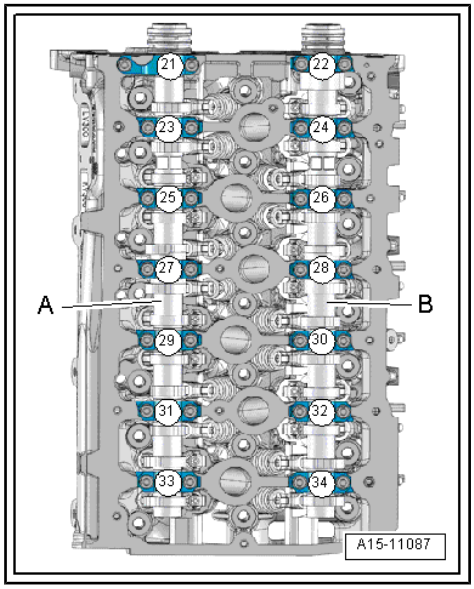

Position of valve spring

- The smaller ∅ -a- faces the valve spring plate.
- The larger ∅ -b- faces the cylinder head.

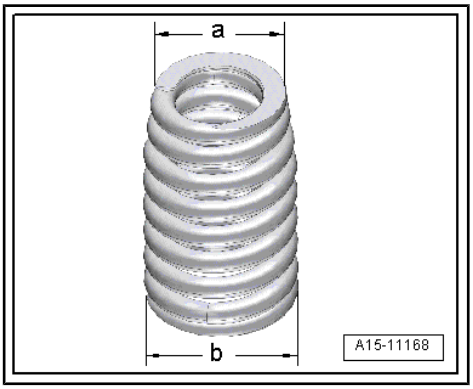

4.2 Measuring axial clearance of camshaft

Special tools and workshop equipment required

♦ Universal dial gauge bracket - VW 387-

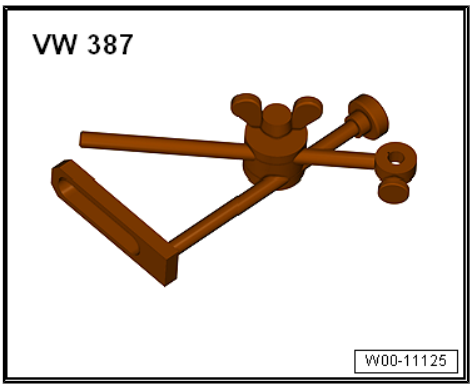

♦ Dial gauge - VAS 6079-

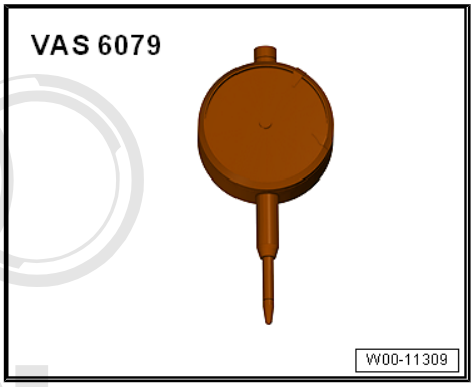

Protected by copyright. Copying for private or commercial purposes, in part or in whole, is not permitted unless authorised by AUDI AG. AUDI AG does not guarantee or accept any liability with respect to the correctness of information in this document. Copyright by AUDI AG.

Test sequence

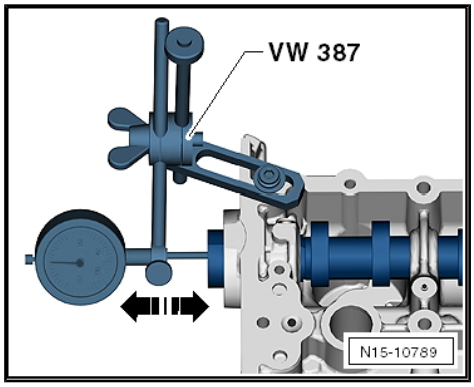

– Remove camshafts ⇒ page 147 .
– Mark original positions of roller rocker fingers and hydraulic compensation elements for re-installation.
– Remove roller rocker fingers and hydraulic compensation elements and place them on a clean surface.
– Insert camshaft that is to be tested in cylinder head and fit bearing cap for axial bearing.
– Attach dial gauge - VAS 6079- with dial gauge bracket - VW 387- to cylinder head.
– Press camshaft against dial gauge by hand.
– Set dial gauge to “0”.
– Press camshaft away from dial gauge and read off value:
• Axial clearance: wear limit: 0.1 mm

4.3 Measuring radial clearance of camshaft

Special tools and workshop equipment required

♦ Plastigage

Procedure

– Remove camshafts ⇒ page 147 .
– Mark original positions of roller rocker fingers and hydraulic compensation elements for re-installation.
– Remove roller rocker fingers and hydraulic compensation elements and place them on a clean surface.
– Clean bearings and bearing journals.
– Place a length of Plastigage corresponding to the width of the bearing on the bearing journal or bearing shell to be measured.
• The Plastigage must be positioned in the centre of the bearing.
– Re-insert camshafts, fit bearing caps and tighten (cylinder head 1, right-side ⇒ page 136 , cylinder head 2, left-side ⇒ page 136) without rotating camshafts.
– Remove bearing caps and camshafts again.
– Compare width of Plastigage with measurement scale.
• Radial clearance (wear limit): 0.1 mm
– When carrying out final assembly, use new nuts.

4.4 Removing and installing camshaft

Special tools and workshop equipment required

Protected by copyright. Copying for private or commercial purposes, in part or in whole, is not permitted unless authorised by AUDI AG. AUDI AG does not guarantee or accept any liability with respect to the correctness of information in this document. Copyright by AUDI AG.

- Counterhold tool - T10172- with pins -T10172/1-

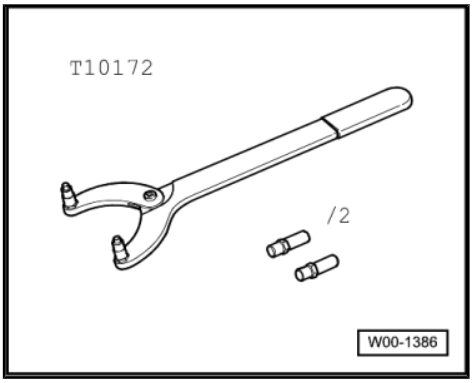

Removing

Caution

Risk of irreparable damage to engine.

- *The camshafts and crankshaft must not be turned when the timing drive is disassembled.*
- *The camshaft bar - T10068 A- is only used for locking the camshafts at TDC. Use a 24 mm open-end spanner to counterhold at hexagon flats of camshaft.*

– Remove housing for variable valve timing ⇒ page 148 .

– Remove locking pin - 3242- .

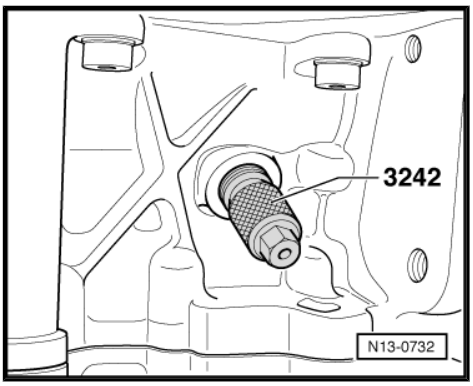

Protected by copyright. Copying for private or commercial purposes, in part or in whole, is not permitted unless authorised by AUDI AG. AUDI AG does not guarantee or accept any liability with respect to the correctness of information in this document. Copyright by AUDI AG.

Caution

Avoid damage to valves and piston crowns.

- *When performing the following steps, the crankshaft must not be at "TDC" position at any cylinder.*

– Turn crankshaft through 30° out of "TDC" position in opposite direction to normal rotation -arrow-.

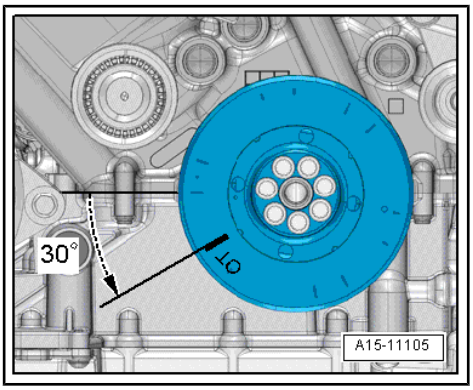

– Use counterhold tool - T10172- with pins -T10172/1- .

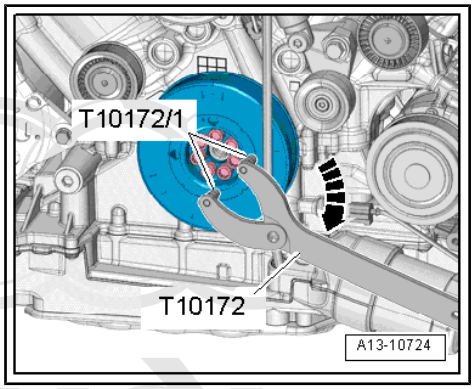

Note

Disregard -arrow-.

– Remove camshaft bar - T10068 A- from relevant cylinder head.

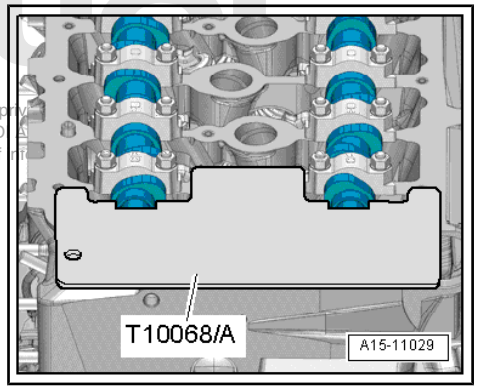

Caution

Risk of damage to valves.

- *Do not turn camshafts.*

Protected by copyright. Copying for priv
permitted unless authorised by AUD
with respect to the correctness of in

Cylinder head (right-side):

Stage	Bearing caps	Order of removal
Inlet camshaft -A-		
1.	-1, 13-	Unbolt
2.	-5, 9-	Unbolt
3.	-7-	Unbolt
4.	-3, 11-	Loosen alternately in diagonal sequence and remove
Exhaust camshaft -B-		
5.	-2, 14-	Unbolt
6.	-6, 10-	Unbolt
7.	-8-	Unbolt
8.	-4, 12-	Loosen alternately in diagonal sequence and remove

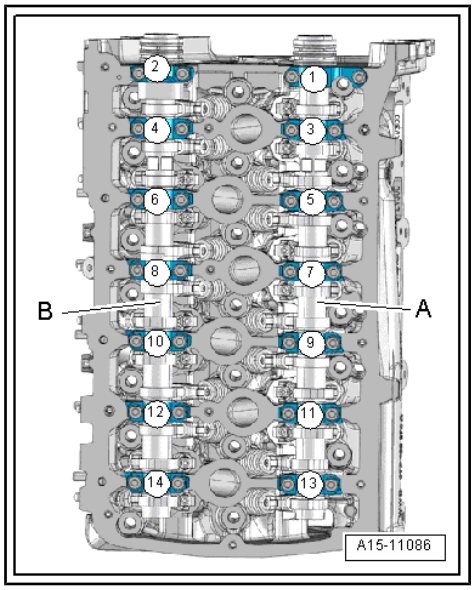

Cylinder head (left-side)

Stage	Bearing caps	Order of removal
Inlet camshaft -A-		
1.	-21, 33-	Unbolt
2.	-25, 29-	Unbolt
3.	-27-	Unbolt
4.	-23, 31-	Loosen alternately in diagonal sequence and remove
Exhaust camshaft -B-		
5.	-22, 34-	Unbolt
6.	-26, 30-	Unbolt
7.	-28-	Unbolt
8.	-24, 32-	Loosen alternately in diagonal sequence and remove

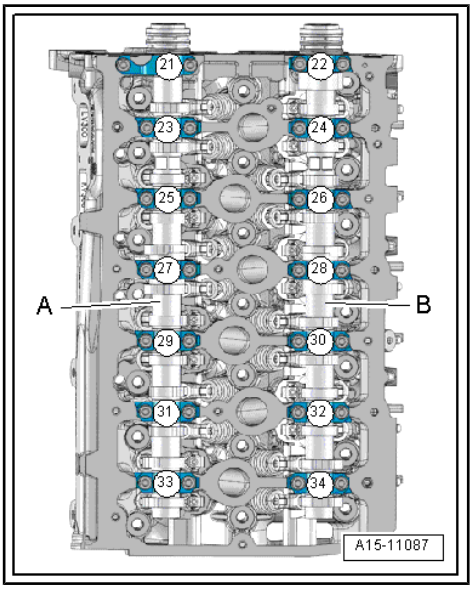

Continued for both cylinder heads

– Carefully remove the camshafts and place them down on a clean surface.

– If necessary, mark original positions of roller rocker fingers and hydraulic compensation elements for re-installation.

– Remove roller rocker fingers and hydraulic compensation elements and place them on a clean surface.

Installing

• Crankshaft turned through 30° out of “TDC” position in opposite direction to normal rotation -arrow-.

– Insert hydraulic compensation elements and roller rocker fingers in cylinder head according to markings made during removal.

– Install roller rocker fingers so that they rest on ends of valve stems.

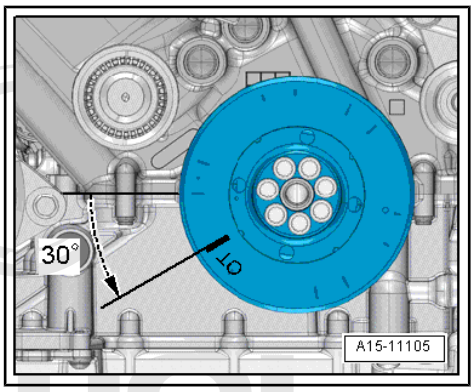

Cylinder head (right-side):

– Allocate camshafts; identification of camshafts ⇒ page 135.

Protected by copyright. Copying for private or commercial purposes, in part or in whole, is not permitted unless authorised by AUDI AG. AUDI AG does not guarantee or accept any liability with respect to the correctness of information in this document. Copyright by AUDI AG.

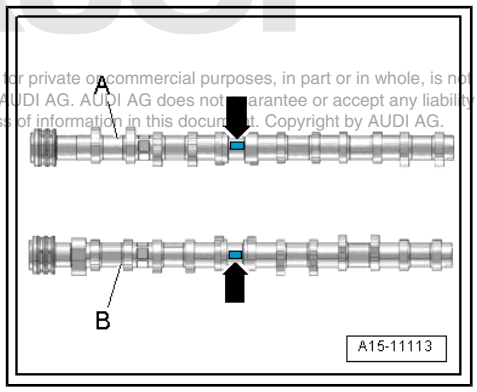

Caution

Risk of damage to valves.

- *Only insert the camshafts in the position shown in the illustration; this will ensure that the bearing caps can be installed so they are free of stress.*

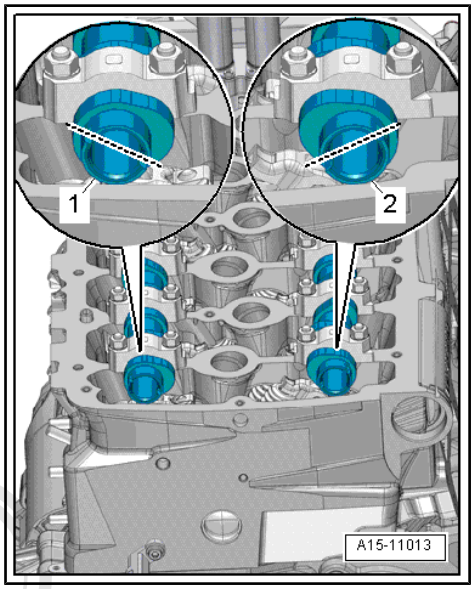

– Insert corresponding camshafts in camshaft bearings of cylinder head.

- The grooves (which are offset from the centre axis of the camshaft) must be at the top.
- The grooves run at an angle of approx. 30° to the top edge of the cylinder head (symmetrically opposite).

1 - Exhaust camshaft

2 - Inlet camshaft

– Grease outer surfaces of bearing caps for axial bearings ⇒ page 136 .

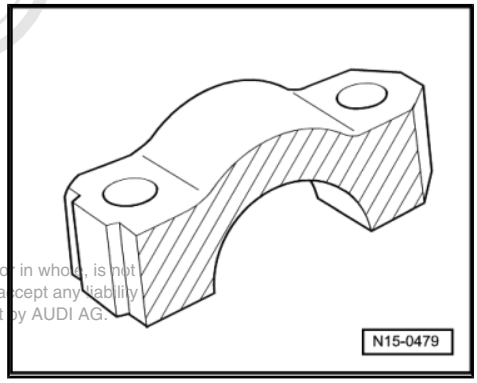

Protected by copyright. Copying for private or commercial purposes, in part or in whole, is not permitted unless authorised by AUDI AG. AUDI AG does not guarantee or accept any liability with respect to the correctness of information in this document. Copyright by AUDI AG.

– Fit all camshaft bearing caps according to their identification numbers:

- The pointed section -arrow A- of the bearing caps for inlet and exhaust camshafts faces outwards.
- The identification markings for the bearing caps are legible from the exhaust side.

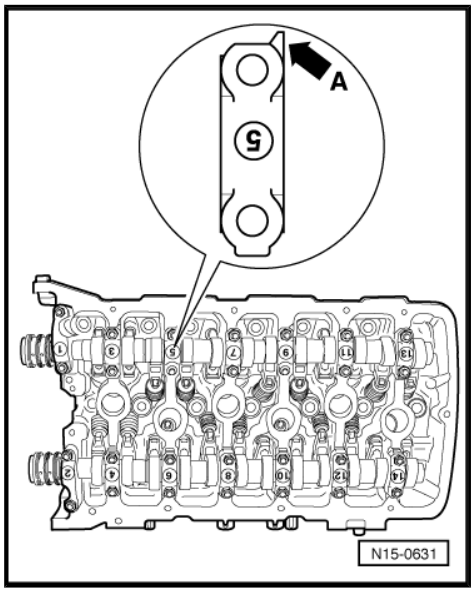

– Tighten bearing caps ⇒ page 136 .

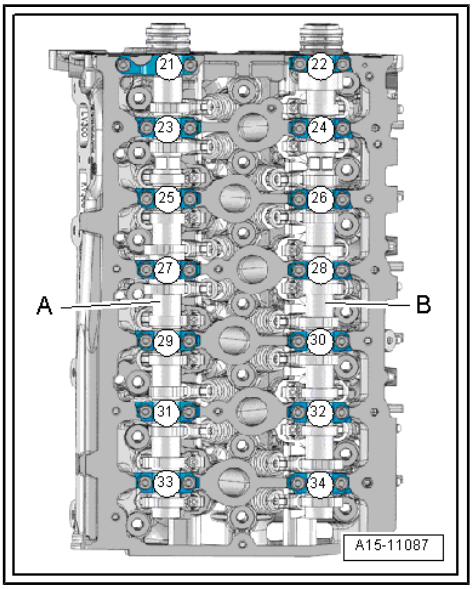

> ⚠ **Caution**
>
> *Risk of damage to valves.*
>
> ◆ *Rotate the camshafts only in the direction indicated in the illustration.*

– Rotate camshafts to “TDC” position:

1 - Rotate exhaust camshaft anti-clockwise.

2 - Rotate inlet camshaft clockwise.

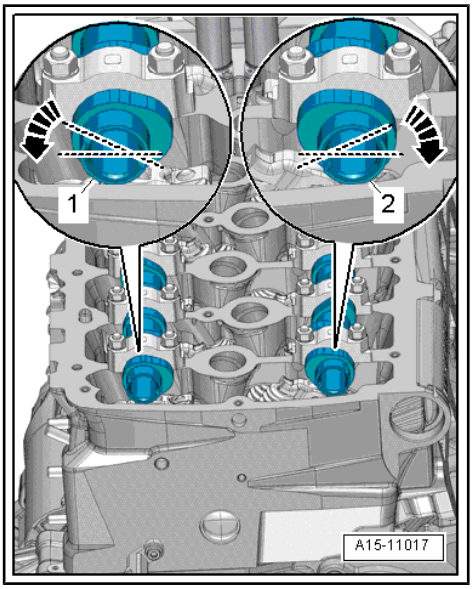

– To do so, apply 24 mm open-end spanner to hexagon flats of camshaft.

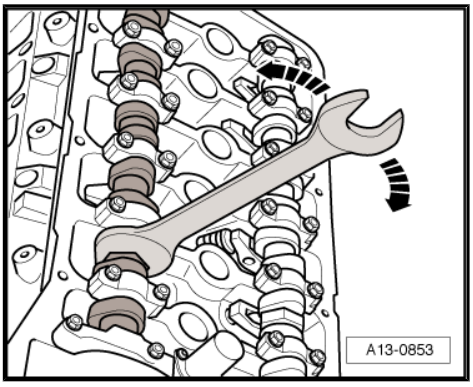

Protected by copyright. Copying for private or commercial purposes, in part or in whole, is not permitted unless authorised by AUDI AG. AUDI AG does not guarantee or accept any liability with respect to the correctness of information in this document. Copyright by AUDI AG.

- The grooves -arrows- at the front of the camshafts must be parallel to and above the top edge cylinder head.

– Insert camshaft bar - T10068 A- in camshafts.

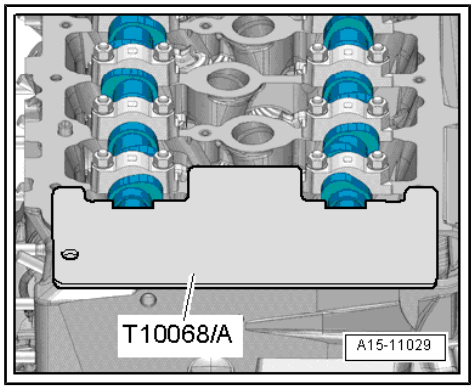

Cylinder head (left-side):

– Allocate camshafts; identification of camshafts ⇒ page 135 .

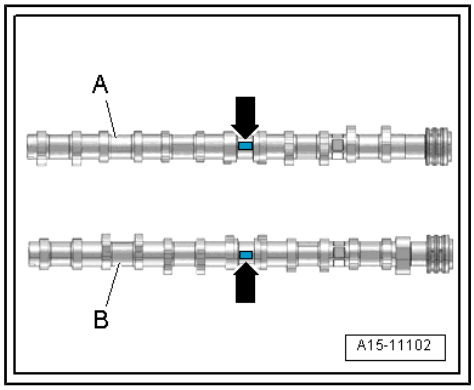

> **Caution**
>
> *Risk of damage to valves.*
>
> ◆ *Only insert the camshafts in the position shown in the illustration; this will ensure that the bearing caps can be installed so they are free of stress.*

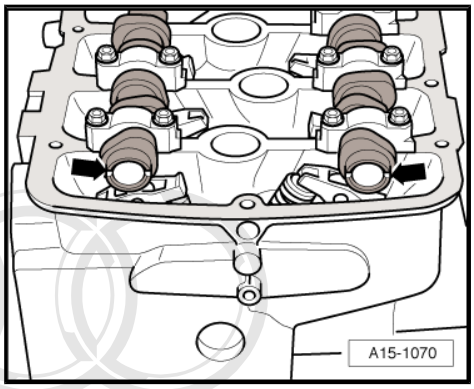

– Insert corresponding camshafts (in “TDC” position) in camshaft bearings of cylinder head.

- The grooves -arrows- (which are offset from the centre axis of the camshaft) must be parallel to and above the top edge of the cylinder head.

– Grease outer surfaces of bearing caps for axial bearings ⇒ page 136 .

Protected by copyright. Copying for private or commercial purposes, in part or in whole, is not permitted unless authorised by AUDI AG. AUDI AG does not guarantee or accept any liability with respect to the correctness of information in this document. Copyright by AUDI AG.

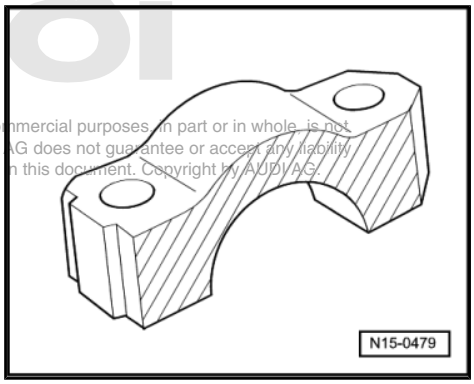

– Fit all camshaft bearing caps according to their identification numbers:

- The pointed section -arrow A- of the bearing caps for inlet and exhaust camshafts faces outwards.
- The identification markings for the bearing caps are legible from the exhaust side.

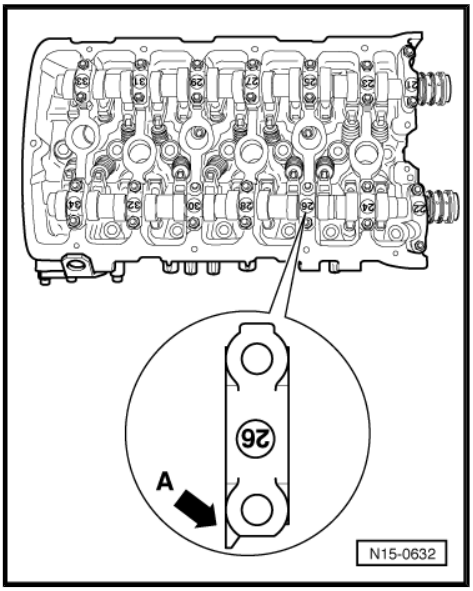

– Tighten bearing caps ⇒ page 136 .

Protected by copyright. Copying for private or commercial purposes, in part or in whole, is not permitted unless authorised by AUDI AG. AUDI AG does not guarantee or accept any liability with respect to the correctness of information in this document. Copyright by AUDI AG.

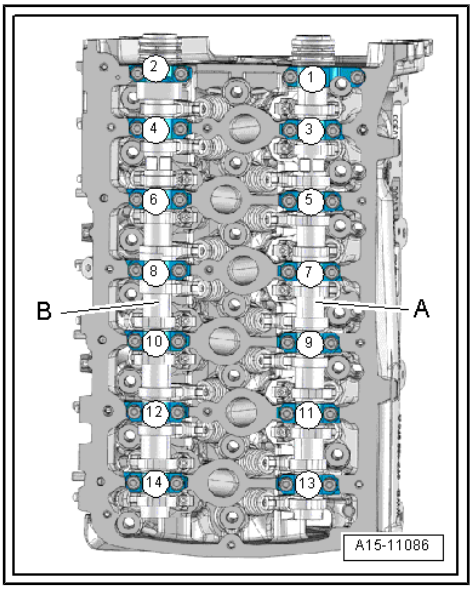

– Insert camshaft bar - T10068 A- in camshafts.

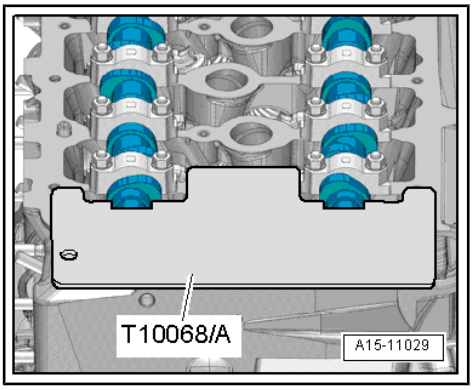

Note

If the camshaft bar - T10068 A- cannot be inserted, turn the camshaft back and forth slightly using a 24 mm open-end spanner.

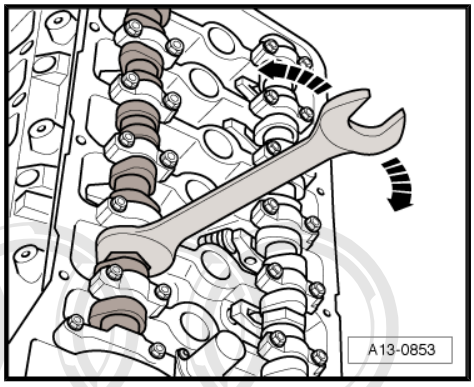

Continued for both cylinder heads

– Install housing for variable valve timing ⇒ page 148 .

– Turn crankshaft through 30° into “TDC” position in direction of normal rotation (clockwise) -arrow-.

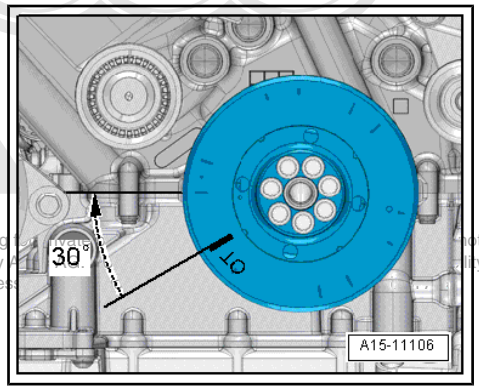

Protected by copyright. Copying for private or commercial purposes, in part or in whole, is not permitted unless authorised by AUDI AG. AUDI AG does not guarantee or accept any liability with respect to the correctness and completeness of this document.

– Use counterhold tool - T10172- with pins -T10172/1- .

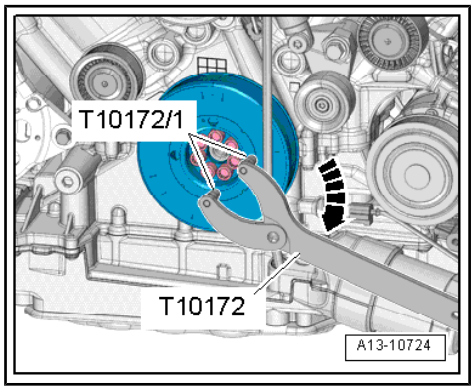

– Screw locking pin - 3242- into hole and tighten to 20 Nm.

– Install camshaft timing chains ⇒ page 105 .

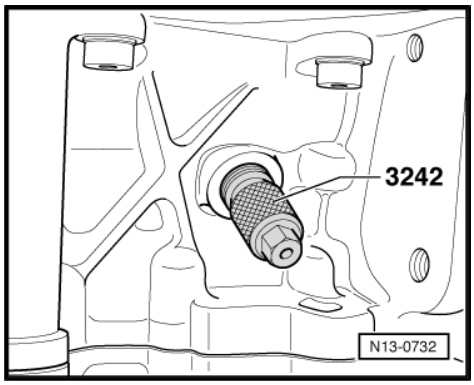

4.5 Removing and installing camshaft adjuster

⇒ "4.5.1 Removing and installing camshaft adjuster", page 147

⇒ "4.5.2 Removing and installing housing for variable valve timing", page 148

4.5.1 Removing and installing camshaft adjuster

Protected by copyright. Copying for private or commercial purposes, in part or in whole, is not permitted unless authorised by AUDI AG. AUDI AG does not guarantee or accept any liability with respect to the correctness of information in this document. Copyright by AUDI AG.

Removing

> ⚠ **Caution**
>
> *Risk of irreparable damage to engine.*
>
> - *The camshafts and crankshaft must not be turned when the timing drive is disassembled.*
> - *The camshaft bar - T10068 A- is only used for locking the camshafts at TDC. Use a 24 mm open-end spanner to counterhold at hexagon flats of camshaft.*

– Remove timing chains from camshafts ⇒ page 96 .

– Counterhold at hexagon flats -arrow- of camshaft using 24 mm open-end spanner and loosen bolt for camshaft adjuster.

– Remove bolt and detach camshaft adjuster.

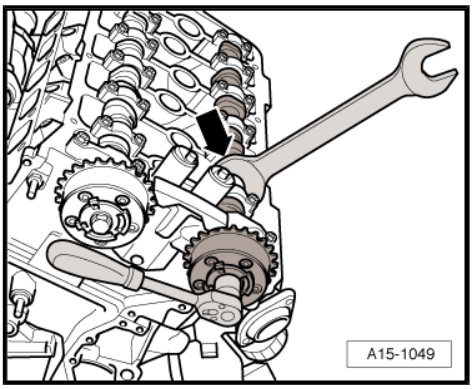

Installing

Installation is carried out in the reverse order; note the following:

> ℹ **Note**
>
> - *Renew the bolts tightened with specified tightening angle.*
> - *The contact surfaces between camshaft adjuster and camshaft, as well as bolt head and camshaft adjusters must be free of oil.*
> - *Note the dowel pin in camshaft adjuster.*

– Note identification of camshaft adjusters ⇒ page 95 .

– Counterhold at hexagon flats -arrow- of camshaft using 24 mm open-end spanner and tighten bolt for camshaft adjuster.

– Install camshaft timing chains ⇒ page 96 .

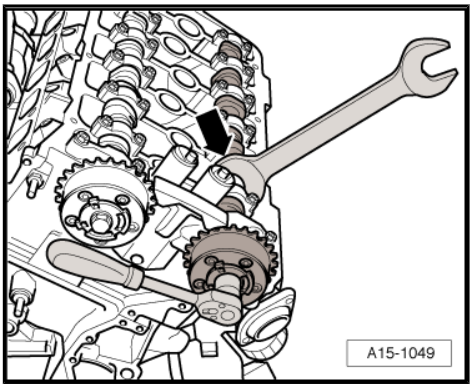

Tightening torques

- ⇒ "4.1 Exploded view - valve gear", page 133

4.5.2 Removing and installing housing for variable valve timing

Removing

Caution

Risk of irreparable damage to engine.

- *The camshafts and crankshaft must not be turned when the timing drive is disassembled.*
- *The camshaft bar - T10068 A- is only used for locking the camshafts at TDC. Use a 24 mm open-end spanner to counterhold at hexagon flats of camshaft.*

– Remove camshaft adjuster ⇒ page 147 .

– Unscrew bolts -arrows- and remove housing for variable valve timing.

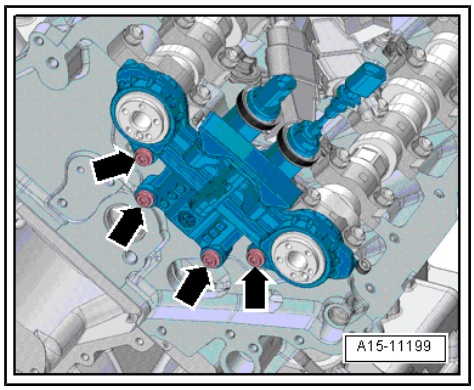

Installing

Installation is carried out in the reverse order; note the following.

– Check that dowel sleeves -1 and 3- are inserted in housing for variable valve timing at positions indicated.

– Clean filters -2- on back of housing for variable valve timing.

– Coat contact surface for rectangular section seals in housing for variable valve timing with oil.

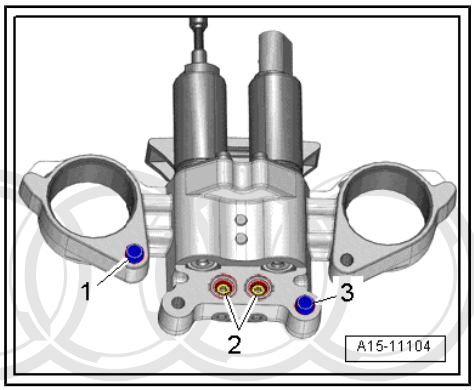

Note

- *Make sure that the rectangular section seals on the camshafts do not become damaged when installing the housing for variable valve timing.*
- *The ends of the rectangular section seals must be offset by 120°.*

– Install camshaft adjuster ⇒ page 147 .

Protected by copyright. Copying for private or commercial purposes, in part or in whole, is not permitted unless authorised by AUDI AG. AUDI AG does not guarantee or accept any liability with respect to the correctness of information in this document. Copyright by AUDI AG.

Tightening torques

- ⇒ “4.1 Exploded view - valve gear”, page 133

4.6 Removing and installing valve stem oil seals

⇒ “4.6.1 Removing and installing valve stem oil seals (cylinder head installed)”, page 149

⇒ “4.6.2 Removing and installing valve stem oil seals (cylinder head removed)”, page 152

4.6.1 Removing and installing valve stem oil seals (cylinder head installed)

Special tools and workshop equipment required

- Spark plug socket and extension - 3122 B-
- Valve stem seal puller - 3364-
- Valve stem seal fitting tool - 3365-
- Removal and installation device for valve cotters - VAS 5161- with drift - VAS 5161/3 A- , assembly cartridge -VAS 5161/8 A- and guide plate - VAS 5161/26-
- Adapter - T40012-

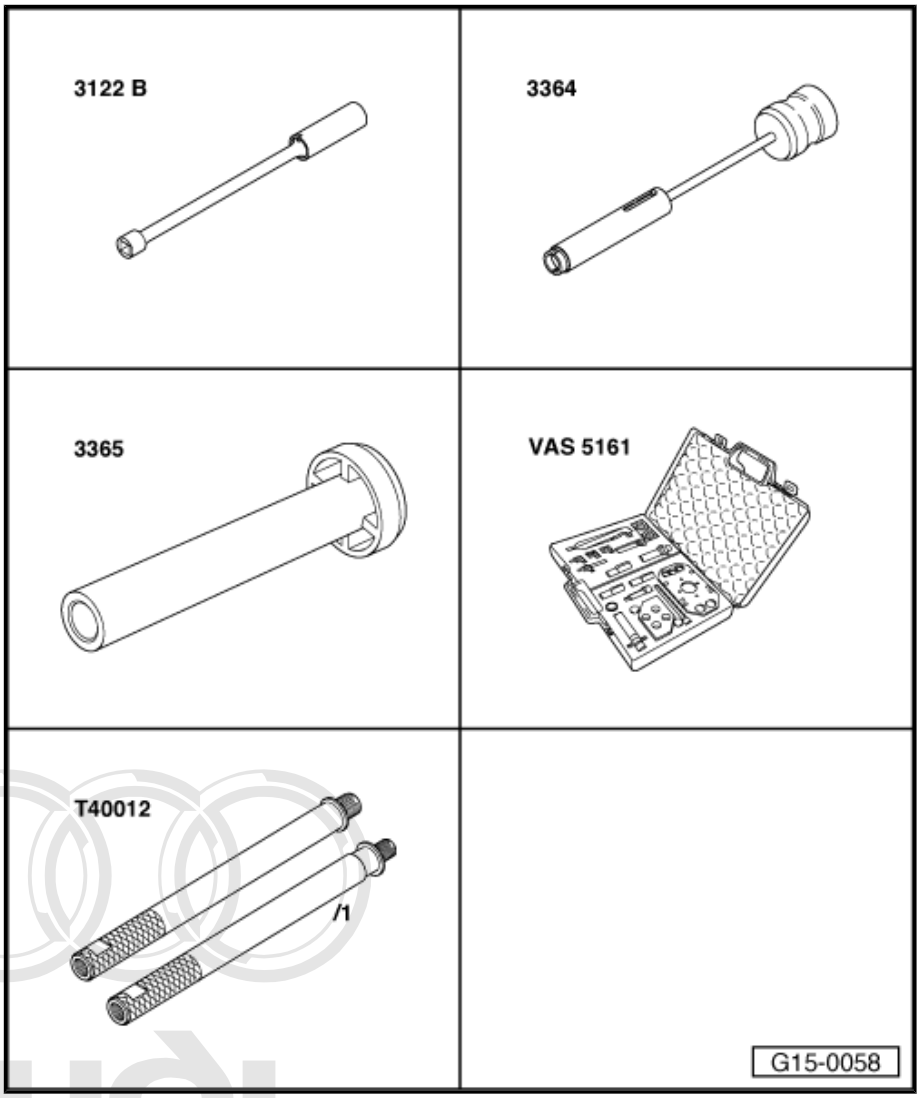

Procedure

Protected by copyright. Copying for private or commercial purposes, in part or in whole, is not permitted unless authorised by AUDI AG. AUDI AG does not guarantee or accept any liability with respect to the correctness of information in this document. Copyright by AUDI AG.

- Engine removed

– Remove camshafts ⇒ page 138 .

– Mark original positions of roller rocker fingers and hydraulic compensation elements for reinstallation.

– Remove roller rocker fingers together with hydraulic compensation elements and put down on a clean surface.

– Remove spark plugs with spark plug socket and extension - 3122 B- .

– Set piston of appropriate cylinder to “bottom dead centre”.

– Apply drift -VAS 5161/3 A- to valve spring plate and use plastic-headed hammer to release sticking valve cotters.

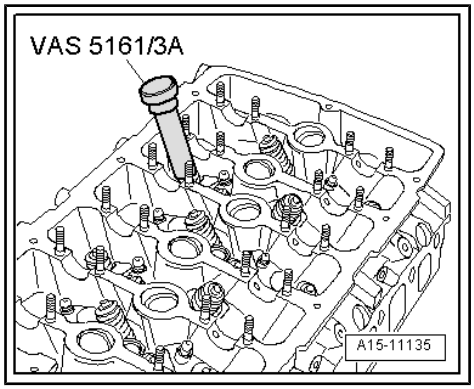

– Fit guide plate -VAS 5161/26- onto cylinder head in correct position:

• Mark “A” should face exhaust side; mark “E” should face inlet side.

– Secure guide plate with nut -1-.

– Screw adapter - T40012- with seal hand-tight into the corresponding spark plug thread.

– Connect adapter to compressed air line using a commercially available connection piece, and apply constant air pressure.

• Minimum pressure: 6 bar

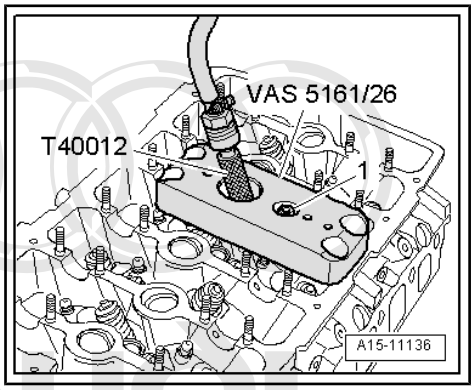

Procedure for outer rows of valves:

– Screw snap-in device -VAS 5161/6- with engaging fork -VAS 5161/5- into guide plate.

– Insert assembly cartridge -VAS 5161/8 A- in guide plate.

– Attach pressure fork -VAS 5161/2- to snap-in device and push assembly cartridge down.

– At the same time, turn knurled screw of assembly cartridge clockwise until tips engage in valve cotters.

– Move knurled screw back and forth slightly; the valve cotters are thus forced apart and taken up by the assembly cartridge.

– Release pressure fork.

– Take out assembly cartridge.

– Detach guide plate and turn to one side.

• The compressed air hose remains connected.

– Detach valve spring with valve spring plate.

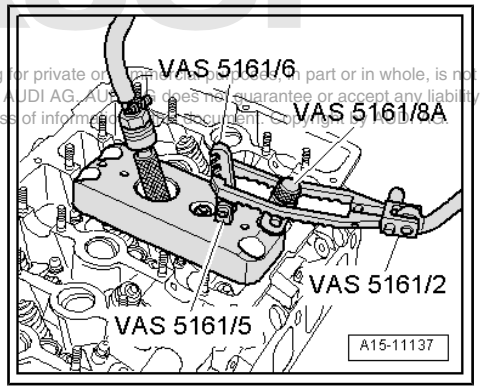

Protected by copyright. Copying for private or commercial purposes, in part or in whole, is not permitted unless authorised by AUDI AG. AUDI AG does not guarantee or accept any liability with respect to the correctness of information in this document. Copyright by AUDI AG.

Procedure for inner rows of valves:

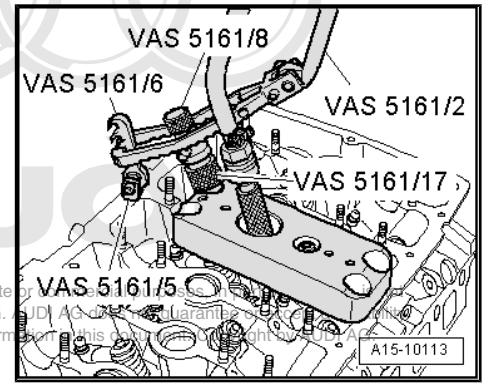

- Screw snap-in device -VAS 5161/6- with engaging fork -VAS 5161/5- into guide plate.
- Slide knurled spacer ring -VAS 5161/17- onto assembly cartridge -VAS 5161/8 A- .
- Insert assembly cartridge -VAS 5161/8 A- in guide plate.
- Attach pressure fork -VAS 5161/2- to snap-in device and push assembly cartridge down.
- At the same time, turn knurled screw of assembly cartridge clockwise until tips engage in valve cotters.
- Move knurled screw back and forth slightly; the valve cotters are thus forced apart and taken up by the assembly cartridge.
- Release pressure fork.
- Take out assembly cartridge.
- Detach guide plate and turn to one side.
- The compressed air hose remains connected.
- Detach valve spring with valve spring plate.

Protected by copyright. Copying for private or commercial purposes, in part or in whole, is not permitted unless authorised by AUDI AG. AUDI AG does not guarantee or assume any liability with respect to the correctness of information in this document. Copyright by AUDI AG.

All valves (continued):

- Pull off valve stem oil seal with valve stem seal puller - 3364- .

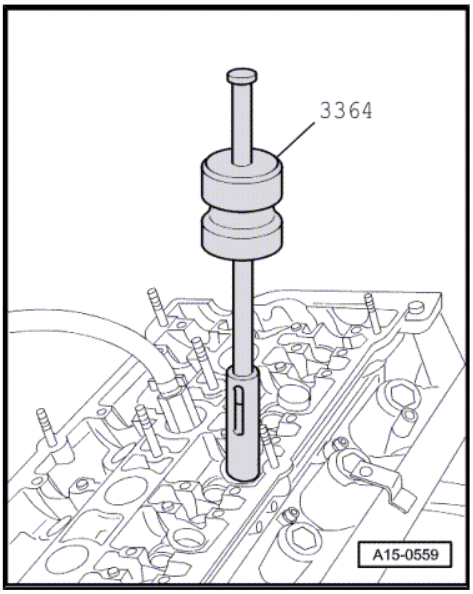

> ⚠ **Caution**
>
> *Make sure valve stem oil seals are not damaged when installing.*
>
> ♦ *New valve stem oil seals -B- are supplied with plastic sleeve; fit plastic sleeve -A- onto valve stem.*

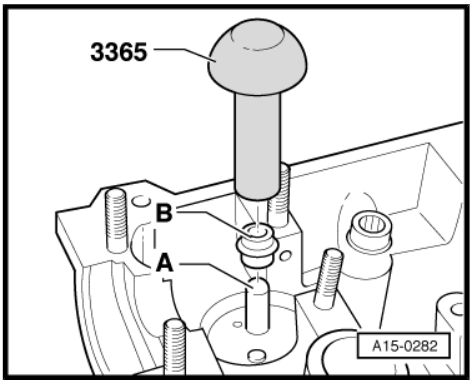

- Lightly oil sealing lip of valve stem oil seal.
- Slide valve stem oil seal onto plastic sleeve.
- Carefully press valve stem oil seal onto valve guide using valve stem seal fitting tool - 3365- .
- Remove plastic sleeve.

If valve cotters have been removed from assembly cartridge, they must first be inserted in insertion device -VAS 5161/18- .

- Larger diameter of valve cotters faces upwards.

– Press assembly cartridge onto insertion device from above and take up valve cotters.

– Insert valve spring and valve spring plate; installation position of valve spring ⇒ page 137 .

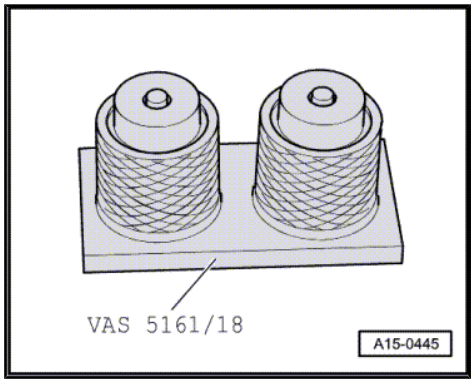

Procedure for outer rows of valves:

– Secure guide plate back onto cylinder head.

– Insert assembly cartridge in guide plate.

– Press down pressure fork and pull knurled screw upwards while turning screw in both directions - this will insert the valve cotters.

– Release pressure fork with knurled screw still in pulled position.

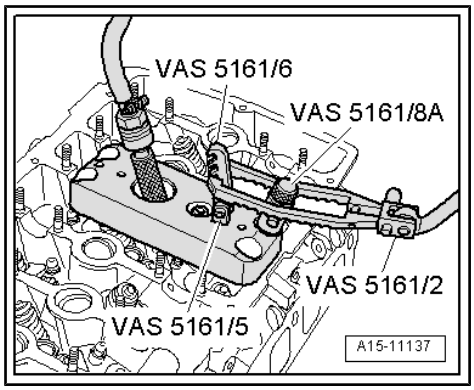

Procedure for inner rows of valves:

– Press down pressure fork and pull knurled screw upwards while turning screw in both directions - this will insert the valve cotters.

– Release pressure fork with knurled screw still in pulled position.

All valves (continued):

– Repeat procedure for each valve.

Assembling

– Ensure that all roller rocker fingers make contact with the ends of the valve stems correctly and are clipped onto their respective hydraulic compensation elements.

– Install camshafts ⇒ page 138 .

– Install spark plugs ⇒ Maintenance ; Booklet 410 .

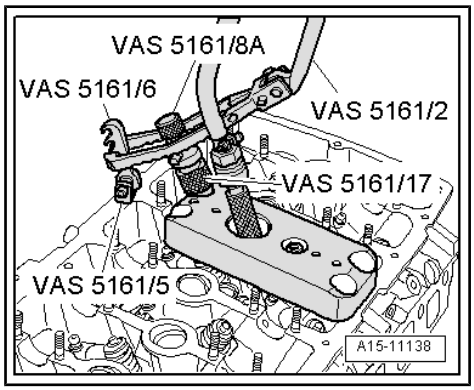

4.6.2 Removing and installing valve stem oil seals (cylinder head removed)

Protected by copyright. Copying for private or commercial purposes, in part or in whole, is not permitted unless authorised by AUDI AG. AUDI AG does not guarantee or accept any liability with respect to the correctness of information in this document. Copyright by AUDI AG.

Special tools and workshop equipment required

- ♦ Valve stem seal puller - 3364-
- ♦ Valve stem seal fitting tool - 3365-
- ♦ Removal and installation device for valve cotters - VAS 5161- with drift - VAS 5161/3 A- , assembly cartridge -VAS 5161/8 A- and guide plate - VAS 5161/26-
- ♦ Engine and gearbox support - VAS 6095-
- ♦ Cylinder head tensioning device - VAS 6419-

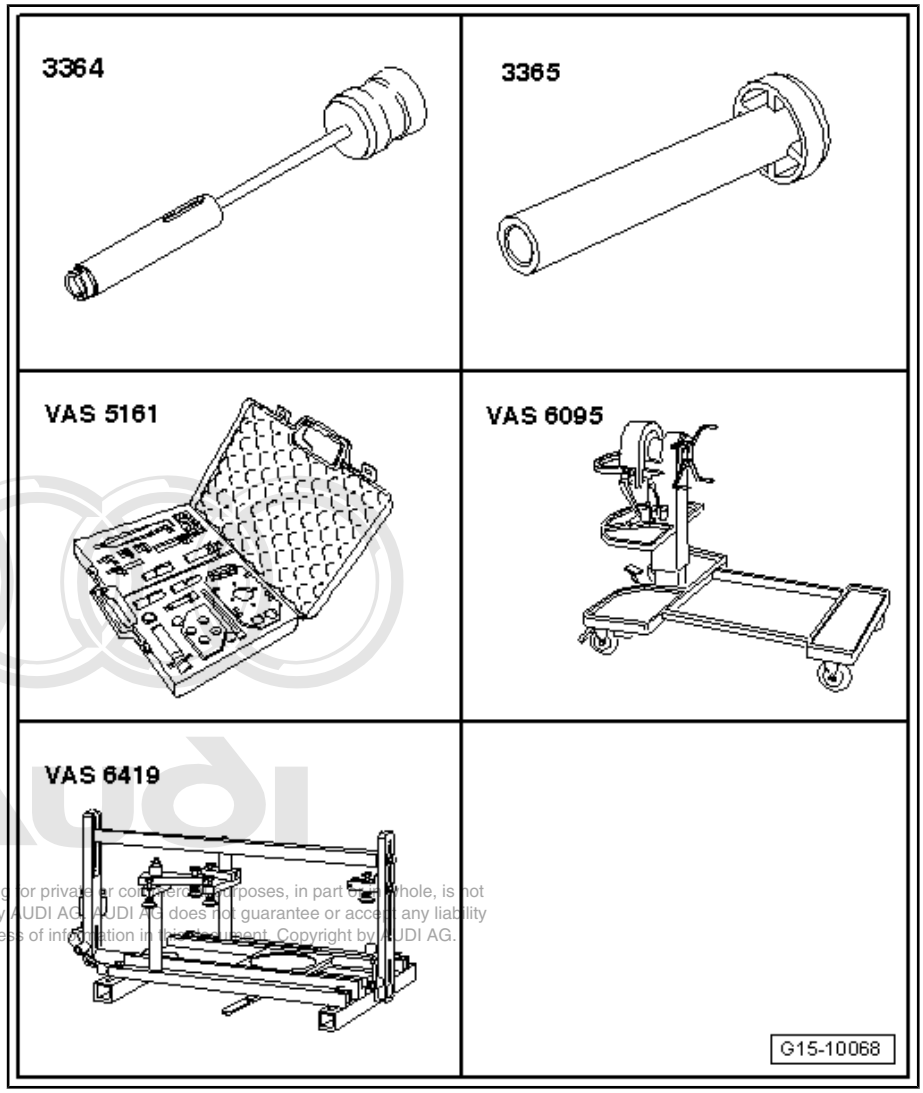

Protected by copyright. Copying for private or commercial purposes, in part or whole, is not permitted unless authorised by AUDI AG. AUDI AG does not guarantee or accept any liability with respect to the correctness of information in this document. Copyright by AUDI AG.

Procedure

- Engine removed

– Remove camshafts ⇒ page 138 .

– Mark original positions of roller rocker fingers and hydraulic compensation elements for reinstallation.

– Remove roller rocker fingers together with hydraulic compensation elements and put down on a clean surface.

– Insert cylinder head tensioning device - VAS 6419- into engine and gearbox support - VAS 6095- .

– Secure cylinder head in cylinder head tensioning device, as shown in illustration.

– Connect cylinder head tensioning device to compressed air.

– Using lever -arrow-, slide air pad under combustion chamber where valve stem oil seal is to be removed.

– Apply just enough compressed air to bring air pad into contact with valve heads.

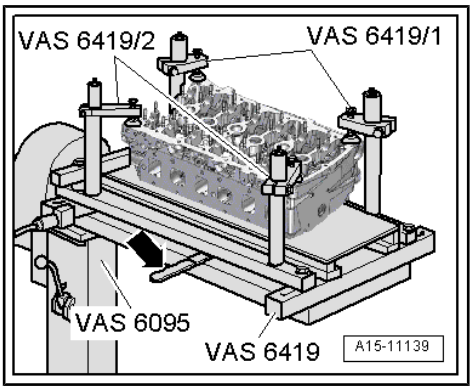

– Apply drift -VAS 5161/3 A- to valve spring plate and use plastic-headed hammer to release sticking valve cotters.

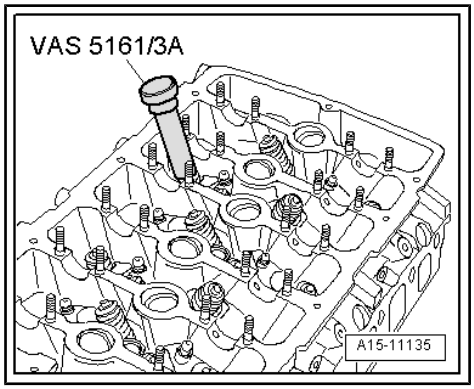

– Fit guide plate - VAS 5161/26- from removal and installation device for valve cotters - VAS 5161- on cylinder head.

• Mark “A” should face exhaust side; mark “E” should face inlet side.

– Secure guide plate with nut -1-.

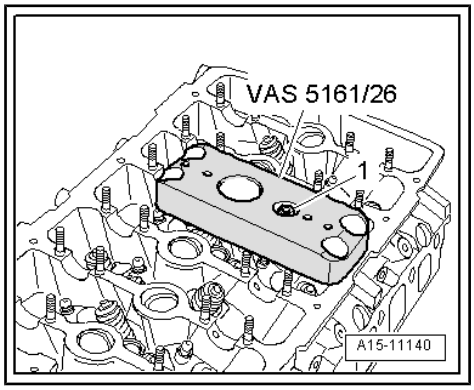

Procedure for outer rows of valves:

– Screw snap-in device -VAS 5161/6- with engaging fork - VAS 5161/5- into guide plate.

– Insert assembly cartridge -VAS 5161/8 A- in guide plate.

– Attach pressure fork -VAS 5161/2- to snap-in device and push assembly cartridge down.

– At the same time, turn knurled screw of assembly cartridge clockwise until tips engage in valve cotters.

– Move knurled screw back and forth slightly; the valve cotters are thus forced apart and taken up by the assembly cartridge.

– Release pressure fork.

– Take out assembly cartridge.

– Detach guide plate and turn to one side.

– Detach valve spring with valve spring plate.

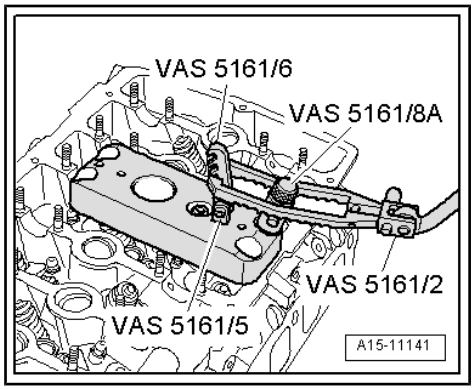

Audi
Production, reproduction or use for private or commercial purposes, in part or in whole, is not permitted unless authorised by AUDI AG. AUDI AG does not guarantee or accept any liability whatsoever with respect to the contents of this document. Copyright by AUDI AG.

Procedure for inner rows of valves:

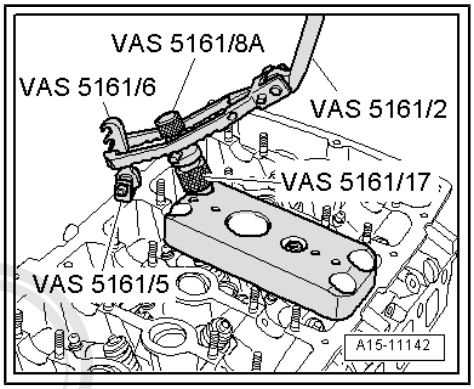

- Screw snap-in device -VAS 5161/6- with engaging fork -VAS 5161/5- into guide plate.
- Slide knurled spacer ring -VAS 5161/17- onto assembly cartridge -VAS 5161/8 A- .
- Insert assembly cartridge -VAS 5161/8 A- in guide plate.
- Attach pressure fork -VAS 5161/2- to snap-in device and push assembly cartridge down.
- At the same time, turn knurled screw of assembly cartridge clockwise until tips engage in valve cotters.
- Move knurled screw back and forth slightly; the valve cotters are thus forced apart and taken up by the assembly cartridge.
- Release pressure fork.
- Take out assembly cartridge.
- Detach guide plate and turn to one side.
- Detach valve spring with valve spring plate.

All valves (continued):

Protected by copyright. Copying for private or commercial purposes, in part or in whole, is not permitted unless authorised by AUDI AG. AUDI AG does not guarantee or accept any liability with respect to the correctness of information in this document. Copyright by AUDI AG.

- Pull off valve stem oil seal with valve stem seal puller - 3364- .

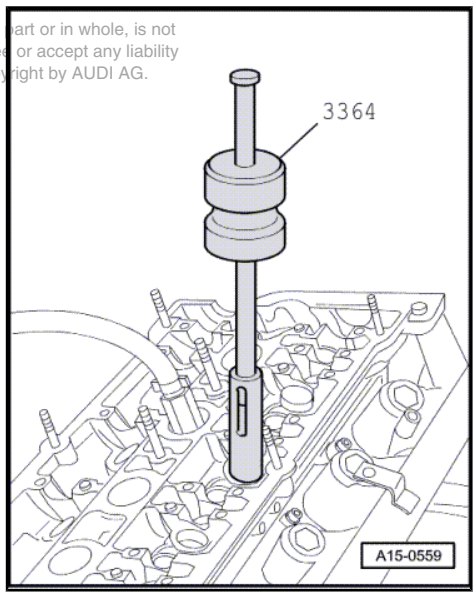

> **Caution**
>
> *Make sure valve stem oil seals are not damaged when installing.*
>
> ♦ *New valve stem oil seals -B- are supplied with plastic sleeve; fit plastic sleeve -A- onto valve stem.*

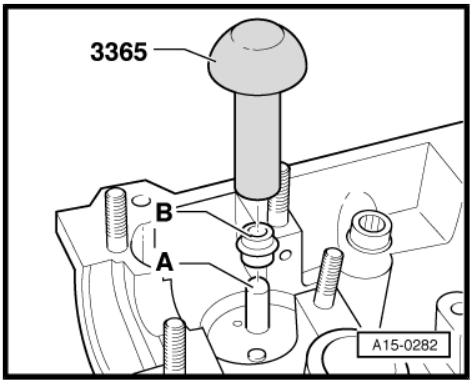

- Lightly oil sealing lip of valve stem oil seal.
- Slide valve stem oil seal onto plastic sleeve.
- Carefully press valve stem oil seal onto valve guide using valve stem seal fitting tool - 3365- .
- Remove plastic sleeve.

If valve cotters have been removed from assembly cartridge, they must first be inserted in insertion device -VAS 5161/18- .

- Larger diameter of valve cotters faces upwards.

– Press assembly cartridge onto insertion device from above and take up valve cotters.

– Insert valve spring and valve spring plate; installation position of valve spring ⇒ page 137 .

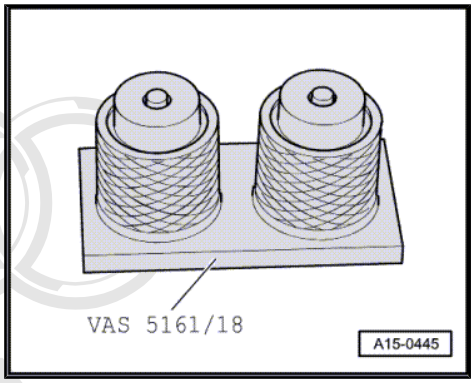

Procedure for outer rows of valves:

– Secure guide plate back onto cylinder head.

– Insert assembly cartridge in guide plate.

– Press down pressure fork and pull knurled screw upwards while turning screw in both directions - this will insert the valve cotters.

– Release pressure fork with knurled screw still in pulled position.

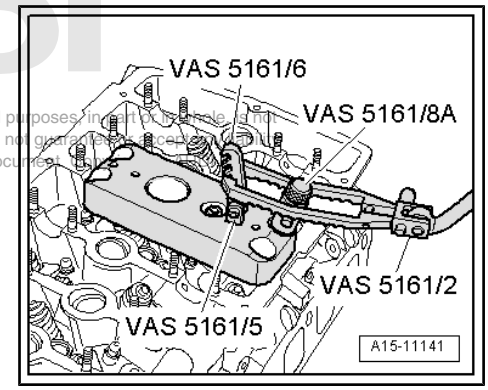

Procedure for inner rows of valves:

– Press down pressure fork and pull knurled screw upwards while turning screw in both directions - this will insert the valve cotters.

– Release pressure fork with knurled screw still in pulled position.

All valves (continued):

– Repeat procedure for each valve.

Assembling

Installation is carried out in the reverse order; note the following:

– Ensure that all roller rocker fingers make contact with the ends of the valve stems correctly and are clipped onto their respective hydraulic compensation elements.

– Install camshafts ⇒ page 138 .

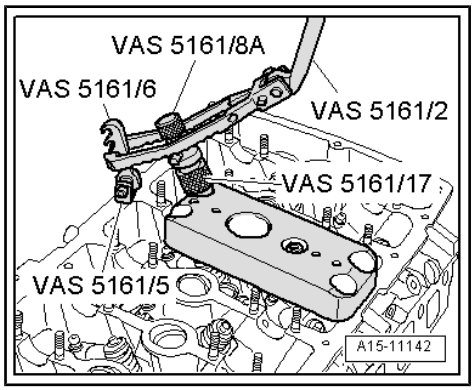

Protected by copyright. Copying for private or commercial purposes, in part or in whole, is not permitted unless authorised by AUDI AG. AUDI AG does not guarantee or accept any liability with respect to the correctness of information in this document.

5 Inlet and exhaust valves

⇒ “5.1 Checking valve guides”, page 157
⇒ “5.2 Checking valves”, page 158
⇒ “5.3 Valve dimensions”, page 158

5.1 Checking valve guides

Special tools and workshop equipment required

- Universal dial gauge bracket - VW 387-

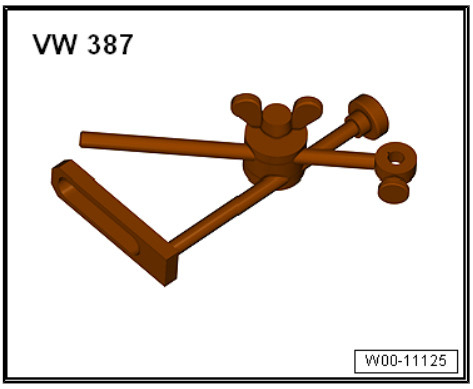

Protected by copyright. Copying for private or commercial purposes, in part or in whole, is not permitted unless authorised by AUDI AG. AUDI AG does not guarantee or accept any liability with respect to the correctness of information in this document. Copyright by AUDI AG.

- Dial gauge - VAS 6079-

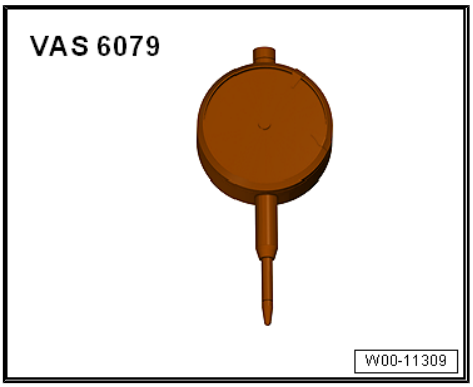

Procedure

Note

- *If the valve has to be renewed as part of a repair, use a new valve for the measurement.*
- *Only insert inlet valve into inlet valve guide and exhaust valve into exhaust valve guide, as the stem diameters are different.*

– Secure dial gauge - VAS 6079- to cylinder head with universal dial gauge bracket - VW 387- as shown in illustration.
– Insert valve into guide.
• End of valve stem must be flush with valve guide.
– Measure the amount of sideways play.
• Wear limit: 0.8 mm.
– If the wear limit is exceeded, repeat the measurement with new valves.
– Renew cylinder head if wear limit is still exceeded.

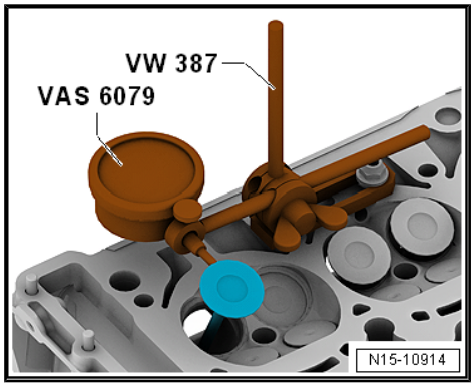

Note

Valve guides cannot be renewed.

5.2 Checking valves

– Visually inspect for scoring on valve stems and valve seat surfaces.
– Renew valve if scoring is clearly visible.

5.3 Valve dimensions

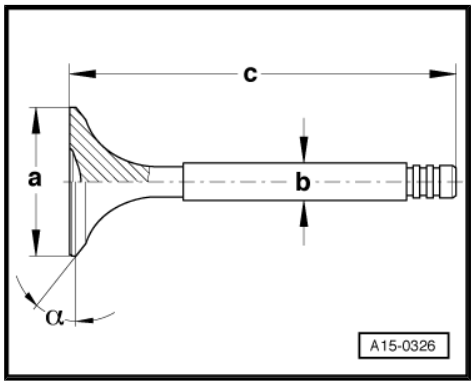

Note

Inlet and exhaust valves must not be machined. Only grinding-in is permitted.

Dimension		Short inlet valve	Long inlet valve	Short exhaust valve	Long exhaust valve
∅ a	mm	33.2	33.2	30.2	30.2
∅ b	mm	5.96	5.96	5.94	5.94
c	mm	102.2	136.4	102.2	136.1
α	∠°	45	45	45	45

WARNING

Care must be taken when disposing of old sodium-cooled exhaust valves - risk of injury.

- ***The valves must be sawn in two with a metal saw between the centre of the stem and valve head. When doing so, the valves must not come into contact with water.***
- ***Then throw a maximum of ten valves into a bucket of water and step away immediately.***
- ***A sudden chemical reaction will occur upon contact with water in which the sodium filling burns.***
- ***After performing these steps the valves can be disposed of in the normal way.***

Protected by copyright. Copying for private or commercial purposes, in part or in whole, is not permitted unless authorised by AUDI AG. AUDI AG does not guarantee or accept any liability with respect to the correctness of information in this document. Copyright by AUDI AG.

17 – Lubrication

1 Sump/oil pump

⇒ “1.1 Exploded view - sump/oil pump”, page 159

⇒ “1.2 Engine oil”, page 162

⇒ “1.3 Removing and installing sump (bottom section)”, page 162

⇒ “1.4 Removing and installing sump (top section)”, page 165

⇒ “1.5 Removing and installing oil pump”, page 175

⇒ “1.6 Removing and installing oil level and oil temperature sender G266 ”, page 176

1.1 Exploded view - sump/oil pump

Note

- *If large quantities of metal shavings or abrasion are found when performing engine repairs, this may be an indication of damage to the crankshaft or conrod bearings. To prevent further damage, the following steps are required after completion of repair work: clean the oil galleries carefully and renew the oil spray jets, engine oil cooler and oil filter.*
- *Refer to ⇒ Maintenance tables for engine oil capacity, oil specifications and viscosity grades.*

Protected by copyright. Copying for private or commercial purposes, in part or in whole, is not permitted unless authorised by AUDI AG. AUDI AG does not guarantee or accept any liability with respect to the correctness of information in this document. Copyright by AUDI AG.

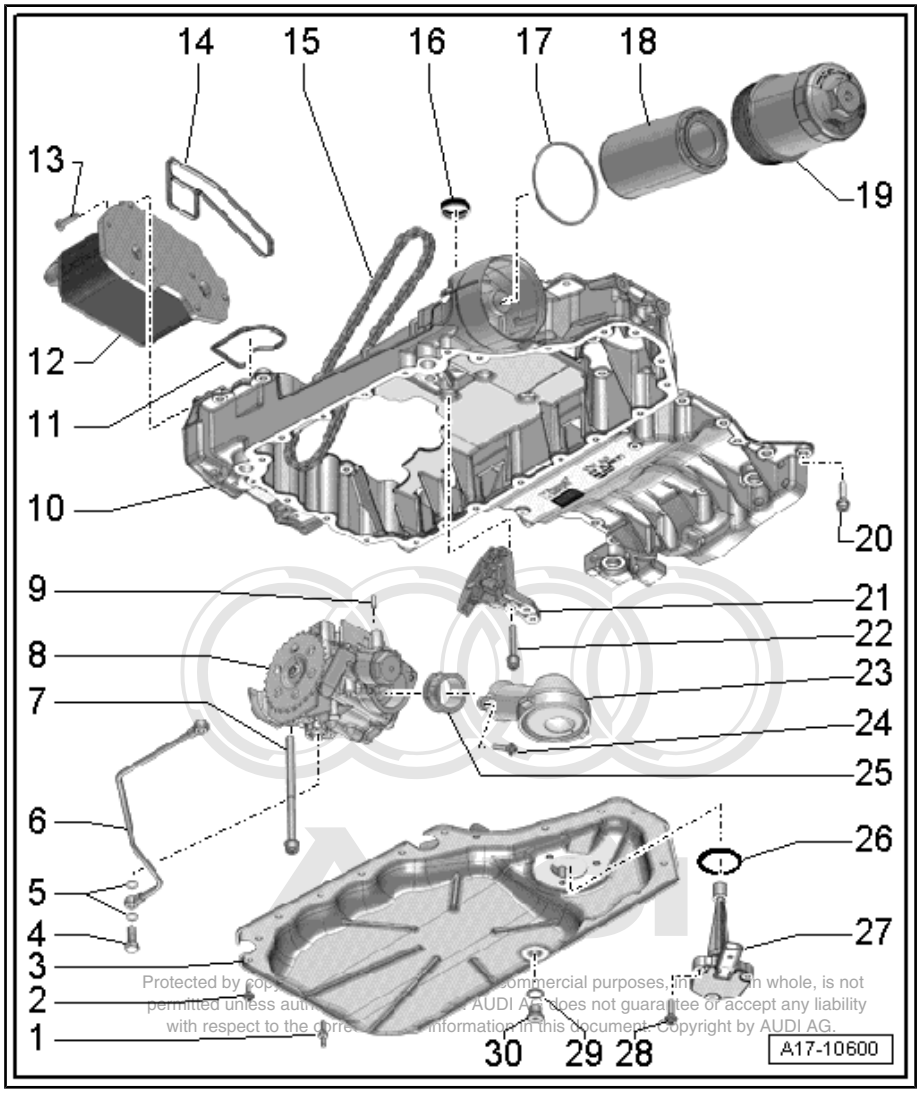

1 - Centre hex stud
- ❑ For bracket
- ❑ Renew
- ❑ Mark installation position for re-installation
- ❑ Tightening torque and sequence ⇒ page 161

2 - Bolt
- ❑ Renew
- ❑ Tightening torque and sequence ⇒ page 161

3 - Sump (bottom section)
- ❑ Removing and installing ⇒ page 162

4 - Banjo bolt
- ❑ 20 Nm

5 - Seals
- ❑ Renew

6 - Oil line

7 - Bolt
- ❑ 20 Nm

8 - Oil pump
- ❑ Do not dismantle
- ❑ With pressure control valve
- ❑ Different versions available; for allocation refer to ⇒ Electronic parts catalogue
- ❑ Removing and installing ⇒ page 175

9 - Dowel pin
- ❑ 2x

10 - Sump (top section)
- ❑ Removing and installing ⇒ page 165

11 - Gasket
- ❑ Renew

12 - Engine oil cooler
- ❑ Removing and installing ⇒ page 177

13 - Bolt
- ❑ 9 Nm

14 - Gasket
- ❑ Renew

15 - Drive chain
- ❑ For oil pump

16 - Seal
- ❑ Renew

17 - O-ring
- ❑ Renew

18 - Oil filter element

- ❑ Removing and installing ⇒ Maintenance ; Booklet 410

19 - Sealing cap

- ❑ 25 Nm

20 - Bolt

- ❑ Different lengths
- ❑ Tightening torque and sequence ⇒ page 162

21 - Chain tensioner

- ❑ Do not dismantle
- ❑ Removing and installing ⇒ “1.5 Removing and installing oil pump”, page 175

22 - Bolt

- ❑ M6: 8 Nm
- ❑ M8: 20 Nm

23 - Intake connecting pipe

- ❑ For oil pump

24 - Bolt

- ❑ 8 Nm

25 - Seal

- ❑ With pulsation damper

26 - Seal

- ❑ Renew

27 - Oil level and oil temperature sender - G266-

- ❑ Removing and installing ⇒ page 176

28 - Bolt

- ❑ 8 Nm

29 - Seal

- ❑ Renew

30 - Oil drain plug

- ❑ 30 Nm

Sump (bottom section) - tightening torque and sequence

Note

Renew the bolts tightened with specified tightening angle.

– Tighten bolts in 3 stages as follows:

Stage	Bolts	Tightening torque/angle specification
1.	-arrows-	Screw in by hand until contact is made
2.	-arrows-	4 Nm in diagonal sequence
3.	-arrows-	Turn 45° further in diagonal sequence

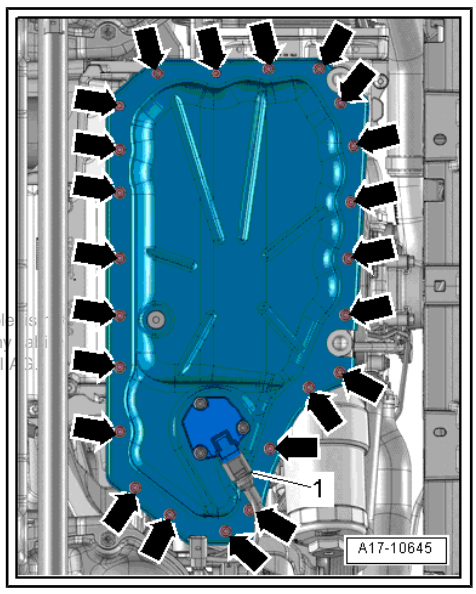

Protected by copyright. Copying for private or commercial purposes, in part or in whole, is not permitted unless authorised by AUDI AG. AUDI AG does not guarantee or accept any liability with respect to the correctness of information in this document. Copyright by AUDI AG.

Sump (top section) - tightening torque and sequence

– Tighten bolts in 3 stages in the sequence shown:

Stage	Bolts	Tightening torque
1.	-1 … 36-	Screw in by hand until contact is made
2.	-1 … 36-	8 Nm
3.	-1 … 8-	20 Nm

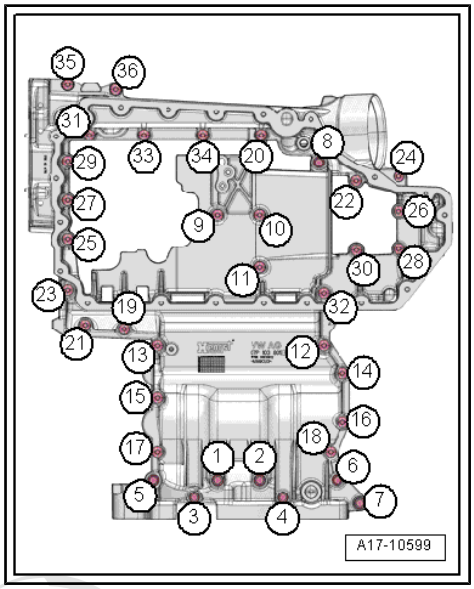

1.2 Engine oil

Refer to ⇒ Maintenance tables for engine oil capacity, oil specifications and viscosity grades.

Caution

Risk of damage to catalytic converter.

- *The oil level must not be above the "MAX" mark on the dipstick.*

1.3 Removing and installing sump (bottom section)

Protected by copyright. Copying for private or commercial purposes, in part or in whole, is not permitted unless authorised by AUDI AG. AUDI AG does not guarantee or accept any liability with respect to the correctness of information in this document. Copyright by AUDI AG.

Special tools and workshop equipment required

- Electric drill with plastic brush attachment
- Safety goggles
- Sealant ⇒ Electronic parts catalogue

Removing

- Engine oil drained ⇒ Maintenance ; Booklet 410 .

– Remove front wheel housing liner (left-side) ⇒ General body repairs, exterior; Rep. gr. 66 ; Wheel housing liners; Removing and installing front wheel housing liner .

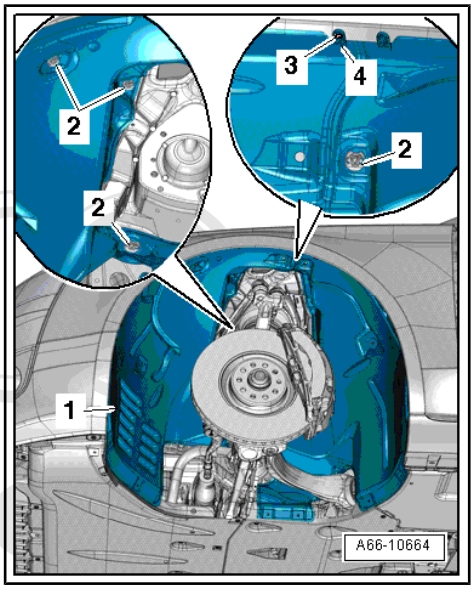

Protected by copyright. Copying for private or commercial purposes, in part or in whole, is not permitted unless authorised by AUDI AG. AUDI AG does not guarantee or assume any liability with respect to the correctness of information in this document.

– Remove bolt -1- at coolant pipe (bottom left).
– Loosen bolt -2-, but do not remove completely.

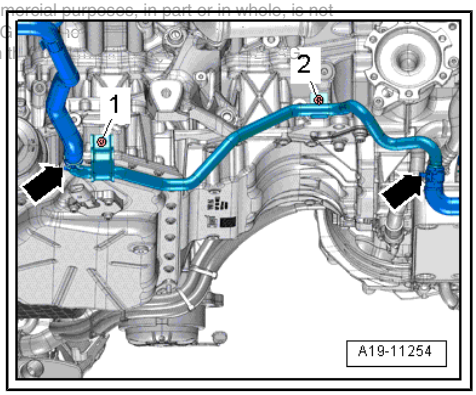

Note

Disregard -arrows-.

– Remove nuts -arrows- and lower anti-roll bar.

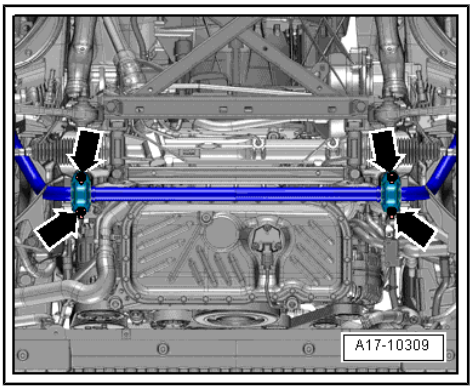

– Remove nuts -arrows- and push bracket -1- with B+ wire to one side.

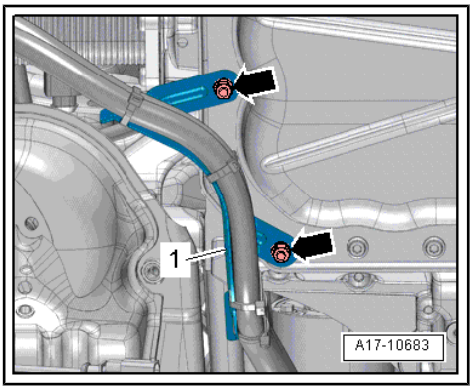

– Unplug electrical connector -1- at oil level and oil temperature sender - G266- .

Caution

Take care to keep components clean.

- *There will still be some oil in the sump (bottom section).*

– Loosen bolts -arrows- in diagonal sequence and remove.

– Carefully release sump (bottom section) from bonded joint and detach.

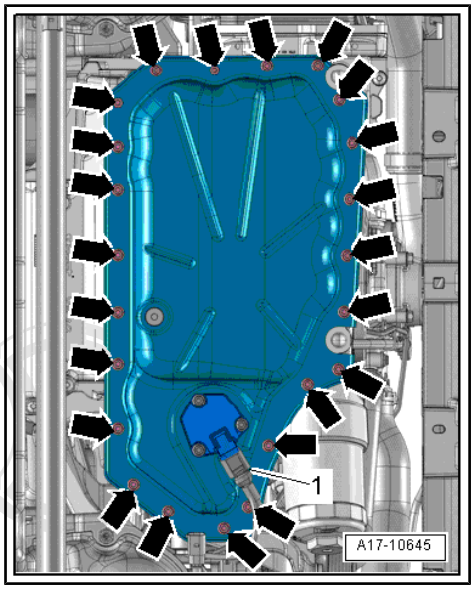

Installing

Caution

Protect lubrication system and bearings against contamination.

- *Cover exposed parts of the engine.*

Protected by copyright. Copying for private or commercial purposes, in part or in whole, is not permitted unless authorized by Audi. Audi does not guarantee or accept any liability with respect to the correctness of information in this document. Copyright by Audi.

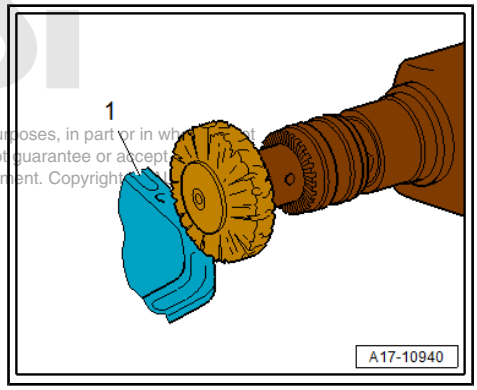

WARNING

Risk of eye injury.

- *Wear safety goggles.*

– Remove sealant residue from sump (bottom section) and sump (top section) using rotating plastic brush or similar.

– Clean surfaces; they must be free of oil and grease.

Note

Note the use-by date of the sealant.

– Cut off nozzle of tube at front marking (nozzle ∅ approx. 2 mm).

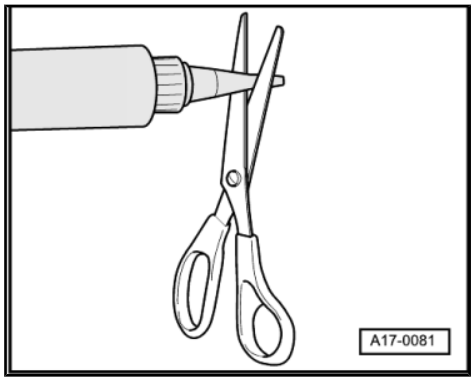

Caution

Make sure lubrication system is not clogged by excess sealant.

- *The bead of sealant must not be thicker than specified.*

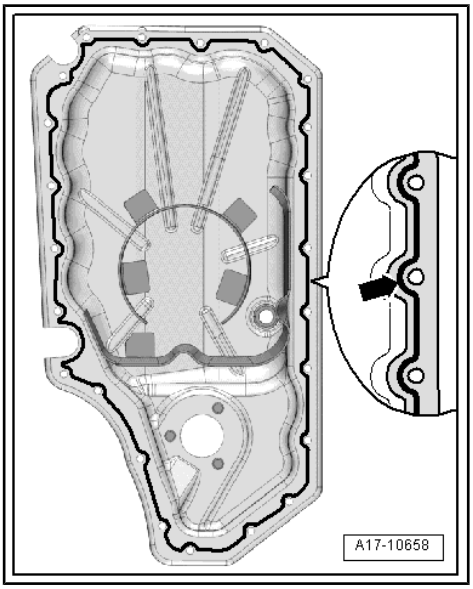

– Apply bead of sealant -arrow- onto clean sealing surface of sump (bottom section) as shown in illustration.

- The route of the bead of sealant is marked on the sump (bottom section).
- Width of sealant bead: 2.5 mm.

Note

The sump (bottom section) must be installed within 5 minutes after applying the sealant.

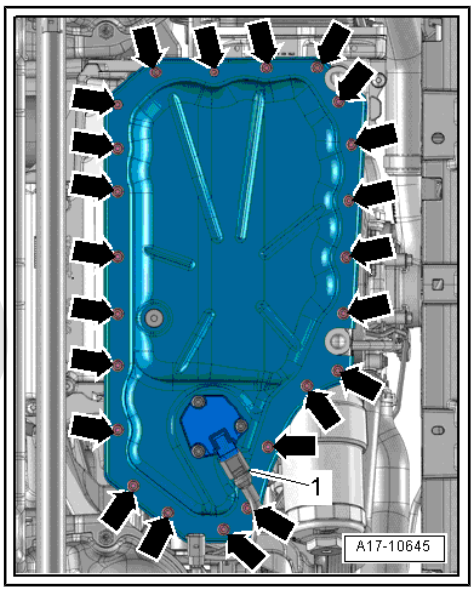

– Fit sump (bottom section), tighten bolts ⇒ page 161 and attach electrical connector -1-.

Remaining installation steps are carried out in reverse sequence; note the following:

– Install coolant pipe (bottom left) ⇒ page 206 .

– Fill with engine oil and check oil level ⇒ Maintenance ; Booklet 410 .

Tightening torques

- ⇒ Fig. ""Sump (bottom section) - tightening torque and sequence"" , page 161
- Anti-roll bar ⇒ Running gear, axles, steering; Rep. gr. 40 ; Subframe; Exploded view - subframe
- ⇒ General body repairs, exterior; Rep. gr. 66 ; Wheel housing liner; Exploded view - wheel housing liner (front)

1.4 Removing and installing sump (top section)

Protected by copyright. Copying for private or commercial purposes, in part or in whole, is not permitted unless authorised by AUDI AG. AUDI AG does not guarantee or accept any liability with respect to the correctness of information in this document. Copyright by AUDI AG.

Special tools and workshop equipment required

- Engine and gearbox jack - V.A.G 1383 A-

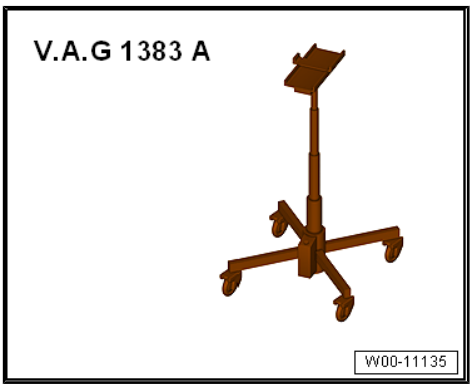

- Straightedge (500 mm) - VAS 6075-

- Electric drill with plastic brush attachment
- Safety goggles
- Sealant ⇒ Electronic parts catalogue

Removing

- Engine oil drained ⇒ Maintenance ; Booklet 410 .

Note

Fit all cable ties in the original positions when installing.

– Support engine in installation position ⇒ page 50 .

– Completely remove wheel housing liners (front left and front right) ⇒ General body repairs, exterior; Rep. gr. 66 ; Wheel housing liner; Removing and installing wheel housing liner (front) .

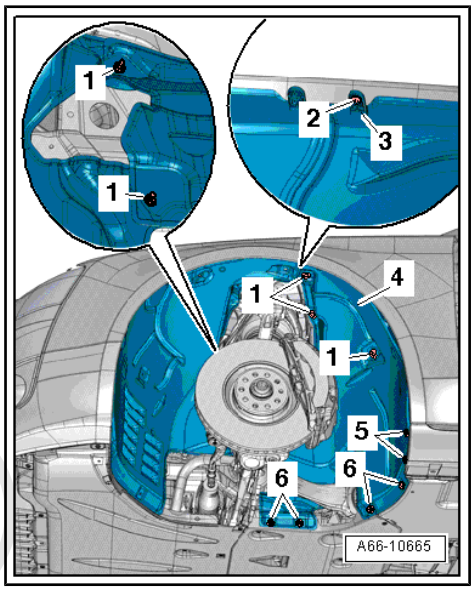

– Remove noise insulation panels -1- and -2- ⇒ General body repairs, exterior; Rep. gr. 66 ; Noise insulation; Removing and installing noise insulation .

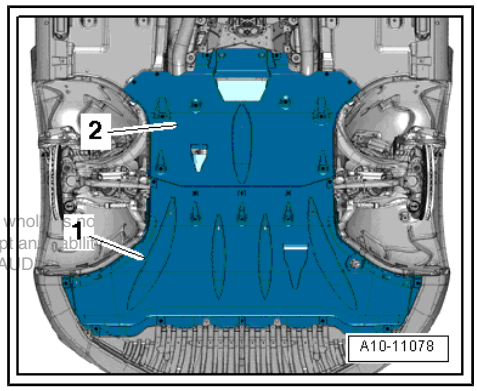

Protected by copyright. Copying for private or commercial purposes, in part or in whole, is not permitted unless authorised by AUDI AG. AUDI AG does not guarantee or accept any liability with respect to the correctness of information in this document. Copyright by AUDI

– Unbolt drive shaft (left and right) from gearbox flange shafts -arrows- ⇒ Running gear, axles, steering; Rep. gr. 40 ; Drive shaft; Removing and installing drive shaft .

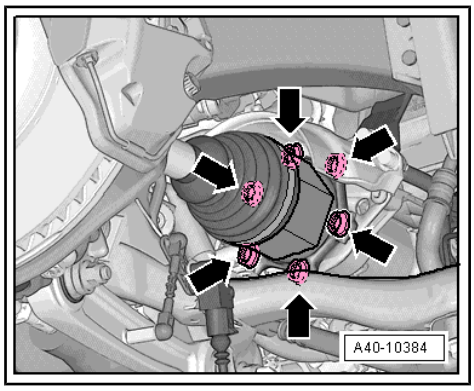

– Remove front underbody trim panels (left and right) -2- ⇒ General body repairs, exterior; Rep. gr. 66 ; Underbody trim; Removing and installing underbody trim .

– Remove longitudinal member (bottom left and right) -2- ⇒ General body repairs, exterior; Rep. gr. 50 ; Lock carrier; Exploded view - lock carrier .

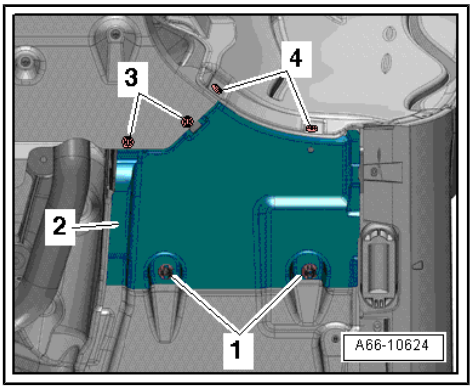

– If fitted, remove electrical connector -1- from bracket and unplug it.

– Detach electrical connector -2- for steering rack from bracket and unplug.

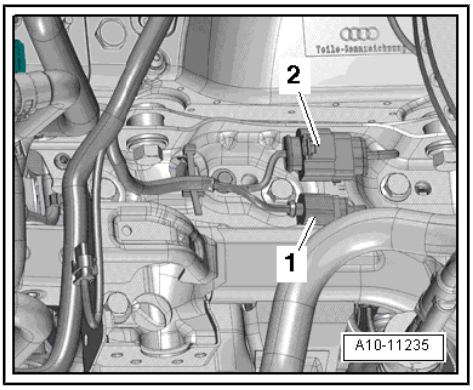

Protected by copyright. Copying for private or commercial purposes, in part or in whole, is not permitted unless authorised by AUDI AG. AUDI AG does not guarantee or accept any liability with respect to the correctness of information in this document. Copyright by AUDI AG.

– Unplug electrical connector -arrow- at front vehicle level sender -G78- / -G289- and move electrical wiring clear.

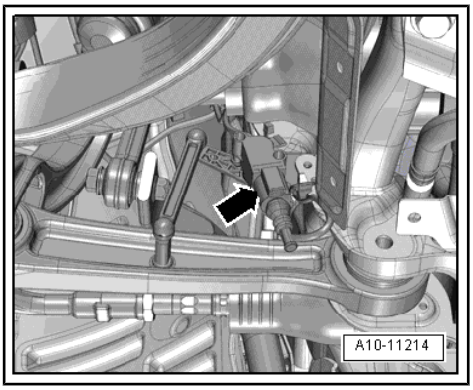

– Remove bolt -1- for anti-roll bar on both sides.

Note

Disregard -items 2, 3-.

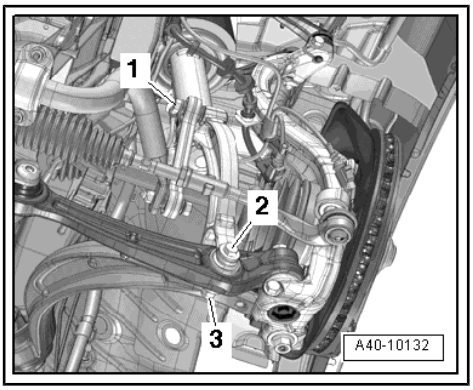

– Remove bolts (left and right) -3- securing gearbox mounting strut.

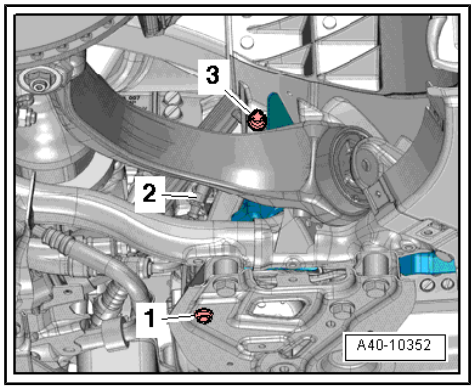

Note

Disregard -items 1, 2-.

– Remove bolts -1, 2- and nut -arrow-.

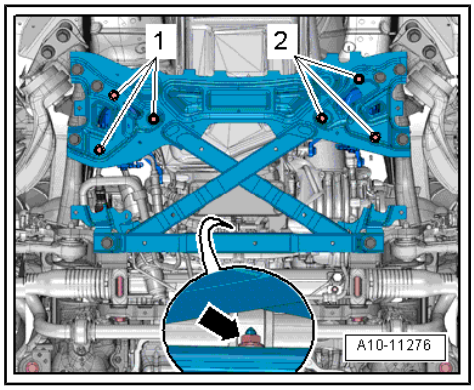

Caution

Risk of damage to running gear components.

- ***The vehicle must NOT be lowered onto its wheels if the engine/gearbox mountings, steering rack or subframe cross brace are not properly installed.***

– Detach intermediate steering shaft from steering rack and move clear by telescoping upwards ⇒ Running gear, axles, steering; Rep. gr. 48 ; Steering column; Removing and installing intermediate steering shaft .

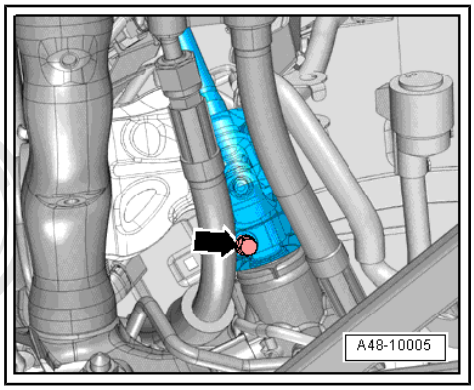

Note

Illustration shows vehicle version up to model year 2013.

Vehicles up to model year 2013:

– Remove bolt -arrow- for power steering hydraulic line.

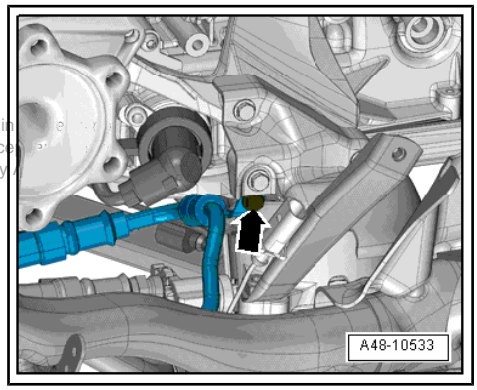

Protected by copyright. Copying for private or commercial purposes, in part or in
permitted unless authorised by AUDI AG. AUDI AG does not guarantee or acce
with respect to the correctness of information in this document. Copyright by

– Remove bolts -arrows- for hydraulic line.

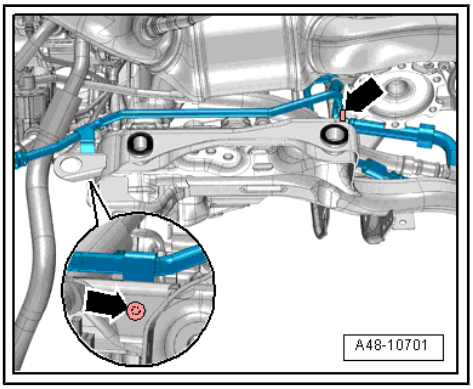

All vehicles (continued):

– Remove bolt -arrow- for engine mounting (left-side).

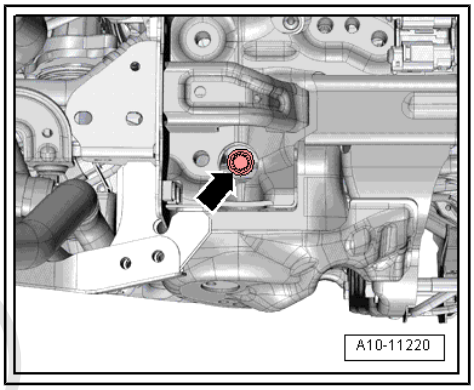

– Unplug electrical connector -1- on solenoid valve (right-side) for electro-hydraulic engine mounting - N145- and move clear.
– Remove bolt -2- for engine mounting (right-side).
– Remove bracket for power steering pump ⇒ page 70 .
– Drain coolant ⇒ page 188 .

Protected by copyright. Copying for private or commercial purposes, in part or in
permitted unless authorised by AUDI AG. AUDI AG does not guarantee or accept
with respect to the correctness of information in this document. Copyright by A

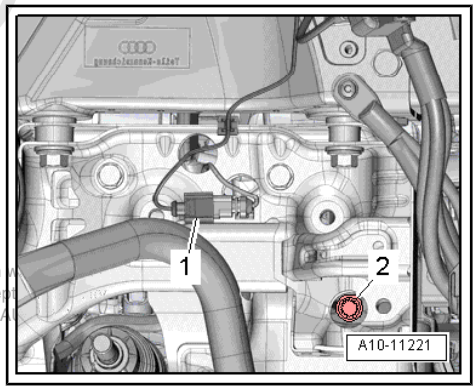

Note

Place a cloth underneath to catch escaping coolant.

– Release hose clip -3- and detach coolant hose.
– Move clear electrical wiring harness at ATF cooler.
– Remove bolts -arrows- and tie up ATF cooler -1- to side with coolant hose -2- attached.

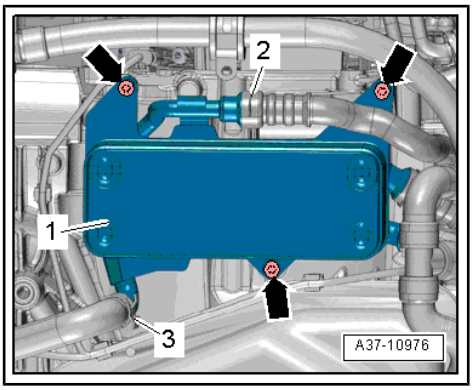

– Remove bolts -9 ... 13- securing gearbox to engine.
– Remove oil pump ⇒ page 175 .

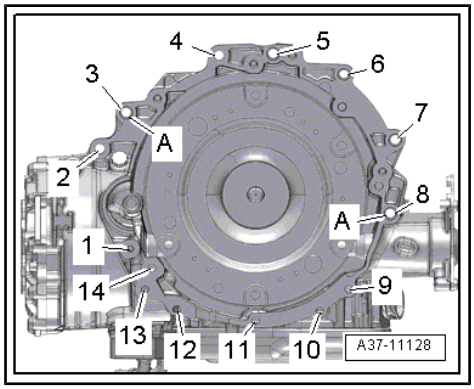

– Move clear electrical wiring harness at clips -1-.
– Remove bolt -2- and detach guide tube for oil dipstick.

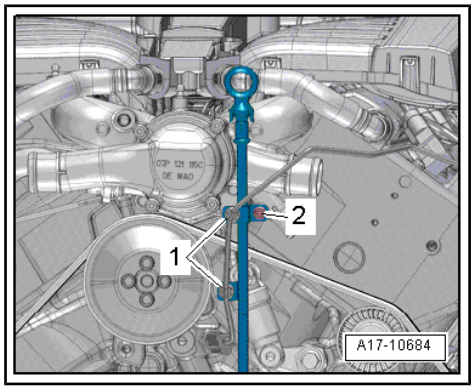

Note

Place a cloth underneath to catch escaping coolant and engine oil.

– Unscrew bolts -arrows- and detach engine oil cooler.

Note

Disregard -items 1 and 2- and -3094- .

– Place subframe cross brace in installation position and fit bolts.

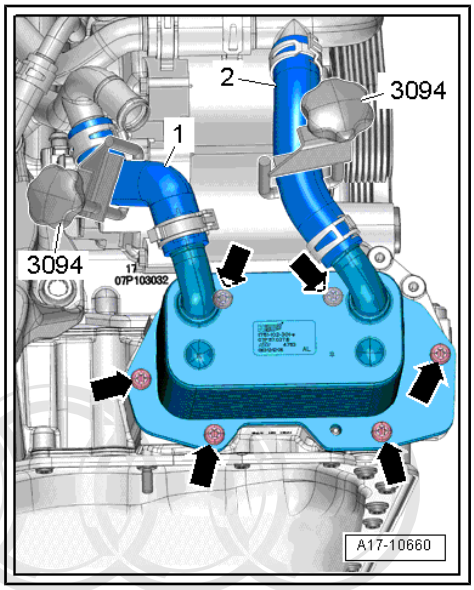

– Support subframe using engine and gearbox jack - V.A.G 1383 A- as illustrated.

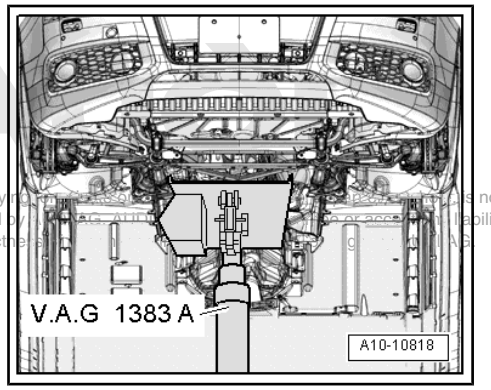

Protected by copyright. Copy[illegible] not permitted unless authorised by [illegible] liability with respect to the correct[illegible]

– Mark installation position of subframe on longitudinal members with felt-tip pen.

– Unscrew subframe bolts -1, 2, 3- on both sides in several stages and in diagonal sequence.

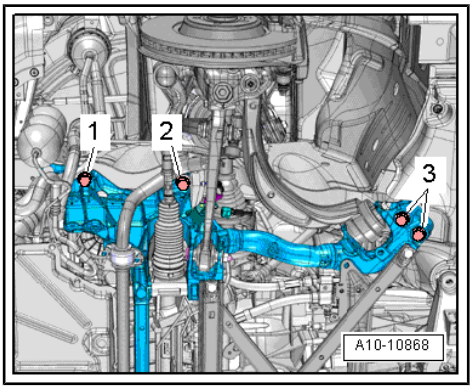

Caution

Risk of damage to running gear components.

- *The vehicle must NOT be lowered onto its wheels if the engine/gearbox mountings, steering rack or subframe cross brace are not properly installed.*

– Lower subframe using engine and gearbox jack - V.A.G 1383 A- just far enough so that all bolts for sump (top section) become accessible and sump (top section) can be removed.

Note

Make sure there is sufficient clearance for hydraulic hoses (left-side) and electrical wiring (right-side).

– Loosen and remove bolts for sump (top section) in the sequence -36 ... 1-.

– Carefully release sump (top section) from bonded joint and pry sump off dowel pins on cylinder block.

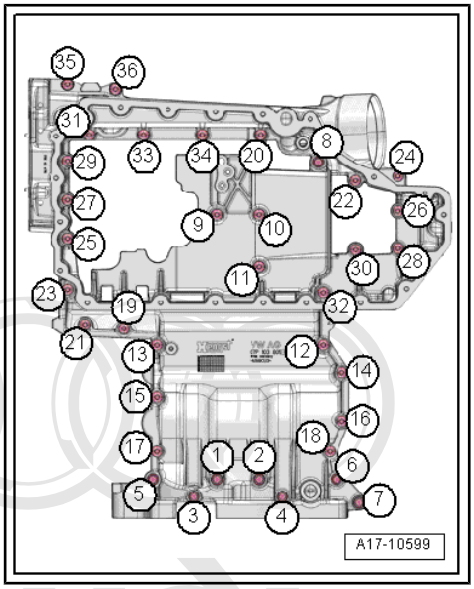

Installing

Note

Renew seal and gaskets.

Caution

Protect lubrication system and bearings against contamination.

- *Cover exposed parts of the engine.*

WARNING

Risk of eye injury.

- *Wear safety goggles.*

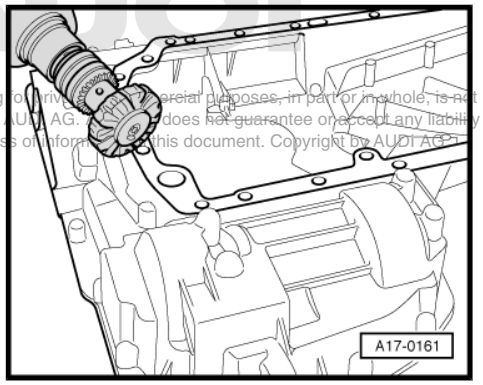

Protected by copyright. Copying for private or commercial purposes, in part or in whole, is not permitted unless authorised by AUDI AG. AUDI AG does not guarantee or accept any liability with respect to the correctness of information in this document. Copyright by AUDI AG.©

– Remove sealant residue from sump (top section) and retaining frame using rotating plastic brush or similar.

– Clean surfaces; they must be free of oil and grease.

Note

Note the use-by date of the sealant.

– Cut off nozzle of tube at front marking (nozzle ∅ approx. 1.5 mm).

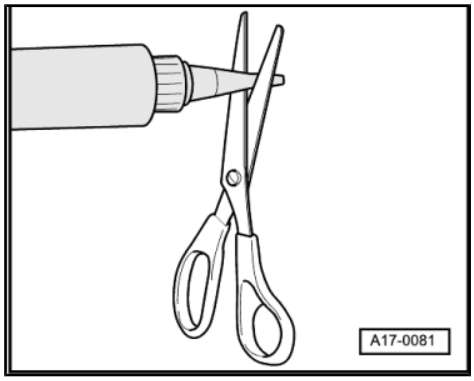

Caution

Make sure lubrication system is not clogged by excess sealant.

- ***The bead of sealant must not be thicker than specified.***

– Apply bead of sealant -arrow- onto clean sealing surface of sump (top section) as shown in illustration.

• Thickness of sealant bead: 1.5 ... 2 mm

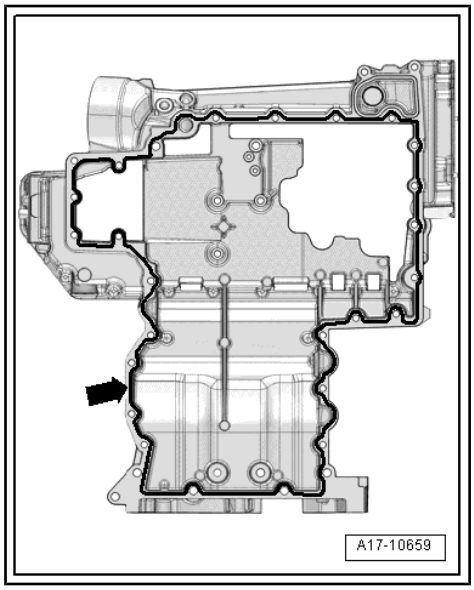

Note

The sump (top section) must be installed within 5 minutes after applying the sealant.

– Fix seal -arrow- in position in groove in crankshaft retaining frame (apply small amount of sealant).

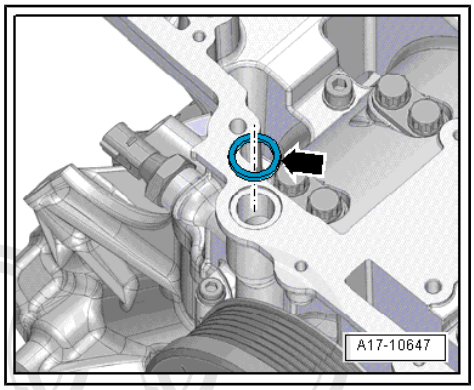

– Fit gasket -arrow- in groove on sump (top section).

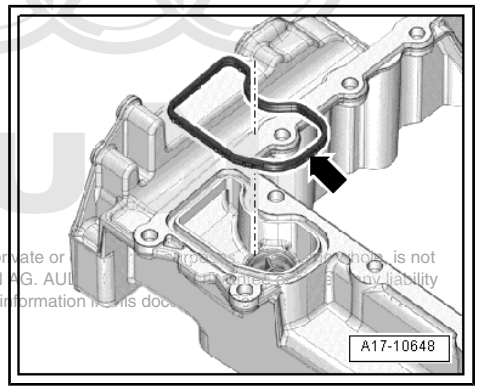

Protected by copyright. Copying for private or [illegible] is not permitted unless authorised by AUDI AG. AUDI [illegible] liability with respect to the correctness of information in this doc[illegible]

Note

When engine is removed, make sure that contact surfaces of cylinder block and sump (top section) align with gearbox -arrow- (use straightedge 500 mm - VAS 6075- -item 1-).

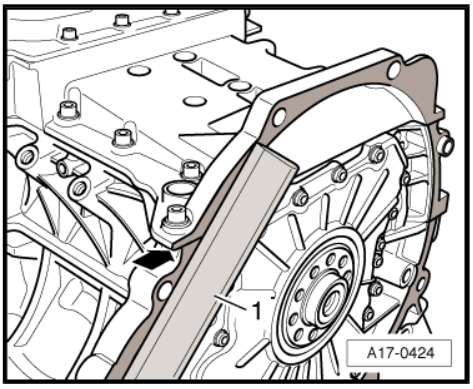

Protected by copyright. Copying for private or commercial purposes, in part or in whole, is not permitted unless authorised by AUDI AG. AUDI AG does not guarantee or accept any liability with respect to the correctness of information in this document. Copyright by AUDI AG.

– Fit sump (top section) and tighten bolts ⇒ page 162 .

Remaining installation steps are carried out in reverse sequence; note the following:

– Install oil pump ⇒ page 175 .

– Install subframe ⇒ Running gear, axles, steering; Rep. gr. 40 ; Subframe; Removing and installing subframe with steering rack .

– Install ATF cooler ⇒ Rep. gr. 37 ; ATF circuit; Removing and installing ATF cooler .

Protected by copyright. Copying for private or commercial purposes, in part or in whole, is not permitted unless authorised by AUDI AG. AUDI AG does not guarantee or accept any liability with respect to the correctness of information in this document. Copyright by AUDI AG.

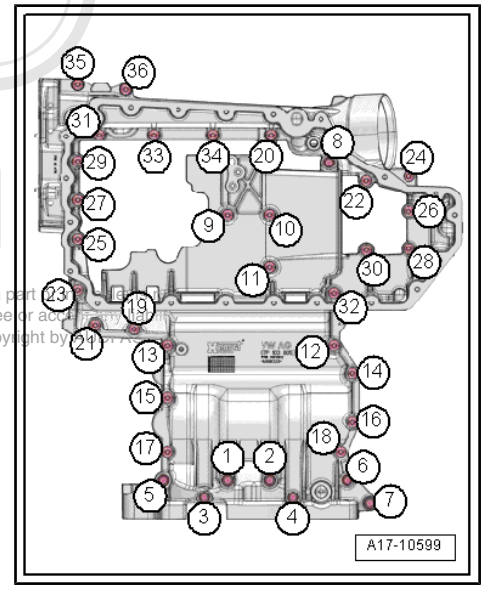

Vehicles up to model year 2013:

– Install power steering pump ⇒ Running gear, axles, steering; Rep. gr. 48 ; Hydraulic power steering; Removing and installing power steering pump .

– Install bracket for power steering pump ⇒ page 70 .

Note

After renewing sump (top section), check alignment of pulleys for power steering pump and air conditioner compressor ⇒ page 68 .

All vehicles (continued):

– Install poly V-belt ⇒ page 66 .

– Install engine mountings ⇒ page 48 .

– Secure intermediate steering shaft to steering rack ⇒ Running gear, axles, steering; Rep. gr. 48 ; Steering column; Removing and installing intermediate steering shaft .

– Install subframe cross brace and anti-roll bar ⇒ Running gear, axles, steering; Rep. gr. 40 ; Subframe; Exploded view - subframe .

Vehicles up to model year 2013:

– Install power steering hydraulic line ⇒ Running gear, axles, steering; Rep. gr. 48 ; Hydraulic power steering; Exploded view - hydraulic lines, reservoir .

All vehicles (continued):

– Install gearbox mounting strut ⇒ page 48 .

Tightening torques

- ⇒ Fig. ""Sump (top section) - tightening torque and sequence"" , page 162
- ⇒ "3.1 Exploded view - oil pressure switches/crankcase breather system", page 179
- ⇒ Rep. gr. 37 ; Removing and installing gearbox; Tightening torques for gearbox
- ⇒ Running gear, axles, steering; Rep. gr. 40 ; Drive shaft; Exploded view - drive shaft
- Lower longitudinal member ⇒ General body repairs, exterior; Rep. gr. 50 ; Lock carrier; Exploded view - lock carrier
- ⇒ General body repairs, exterior; Rep. gr. 66 ; Underbody trim; Exploded view - underbody trim
- ⇒ General body repairs, exterior; Rep. gr. 66 ; Noise insulation; Exploded view - noise insulation

- ⇒ General body repairs, exterior; Rep. gr. 66 ; Wheel housing liner; Exploded view - wheel housing liner (front)

1.5 Removing and installing oil pump

Special tools and workshop equipment required

- Locking pin -T03006-

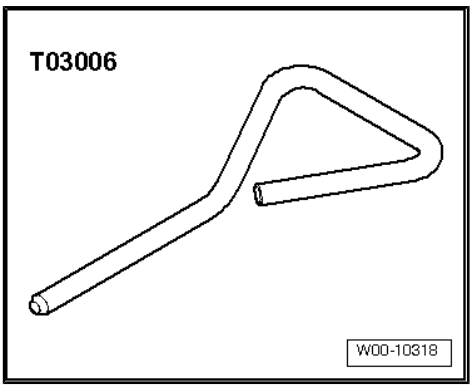

Removing

- Engine oil drained ⇒ Maintenance ; Booklet 410 .
- Remove sump (bottom section) ⇒ page 162 .
- Remove bolts -1, 2, 3- and detach oil line.

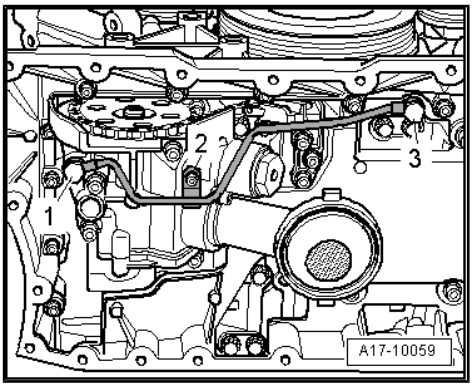

Protected by copyright. Copying for private or commercial purposes, in part or in whole, is not permitted unless authorised by AUDI AG. AUDI AG does not guarantee or accept any liability with respect to the correctness of information in this document. Copyright by AUDI AG.

- Press chain tensioner in direction of -arrow- and lock in place using locking pin -T03006- .
- Remove bolts -1 and 2- and take off chain tensioner.

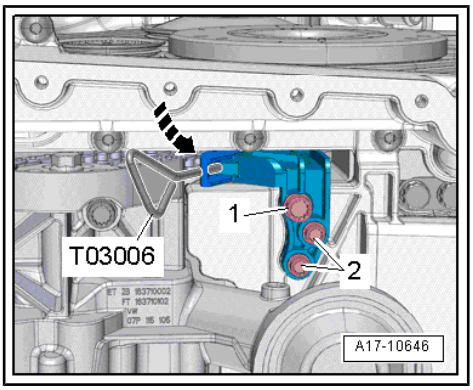

- Remove bolts -arrows-.
- Remove oil pump and drive chain for oil pump; to do so pivot oil pump to side.

Installing

Installation is carried out in the reverse order; note the following:

- Install sump (bottom section) ⇒ page 162 .

Tightening torques

- ⇒ “1.1 Exploded view - sump/oil pump”, page 159

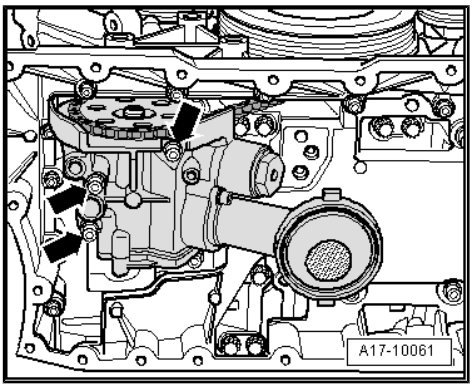

1.6 Removing and installing oil level and oil temperature sender - G266-

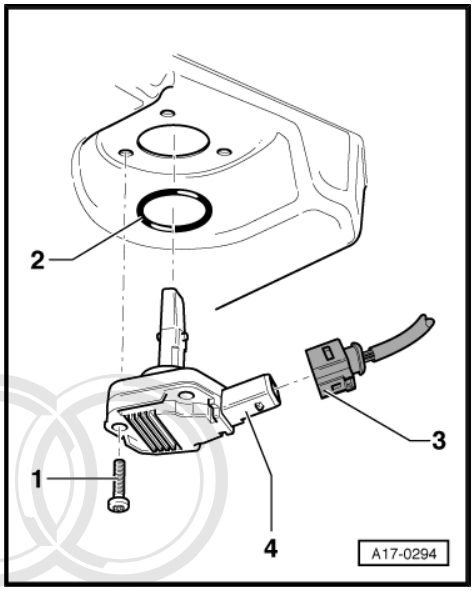

Removing

- Engine oil drained ⇒ Maintenance ; Booklet 410 .

– Unplug electrical connector -3-.

– Remove bolts -1- and detach oil level and oil temperature sender - G266- -item 4-.

Installing

Installation is carried out in the reverse order; note the following:

Note

Renew seal -2-.

– Fill with engine oil and check oil level ⇒ Maintenance ; Booklet 410 .

Tightening torques

♦ ⇒ “1.1 Exploded view - sump/oil pump”, page 159

Protected by copyright. Copying for private or commercial purposes, in part or in whole, is not permitted unless authorised by AUDI AG. AUDI AG does not guarantee or accept any liability with respect to the correctness of information in this document. Copyright by AUDI AG.

2 Engine oil cooler

⇒ “2.1 Removing and installing engine oil cooler”, page 177

2.1 Removing and installing engine oil cooler

Special tools and workshop equipment required

- Hose clamps, up to 25 mm - 3094-

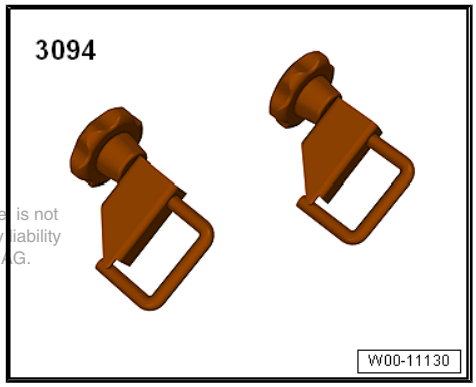

Protected by copyright. Copying for private or commercial purposes, in part or in whole, is not permitted unless authorised by AUDI AG. AUDI AG does not guarantee or accept any liability with respect to the correctness of information in this document. Copyright by AUDI AG.

- Drip tray for workshop hoist - VAS 6208-

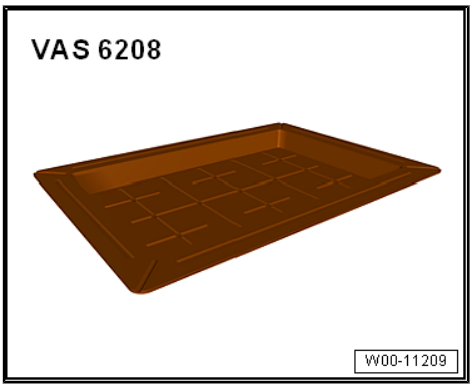

Removing

– Remove noise insulation (front) -1- ⇒ General body repairs, exterior; Rep. gr. 66 ; Noise insulation; Removing and installing noise insulation .

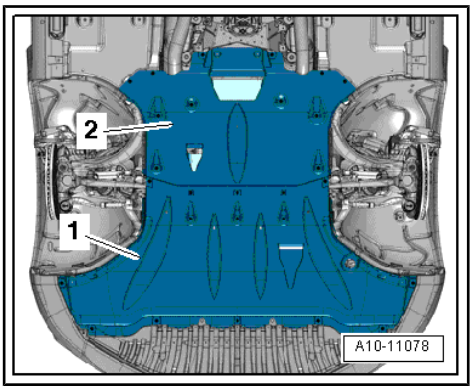

– Place drip tray for workshop hoist - VAS 6208- beneath engine.
– Clamp off coolant hoses -1- and -2- using hose clamps up to 25 mm - 3094- and disconnect coolant hoses (release hose clips).
– Unscrew bolts -arrows- and detach engine oil cooler.

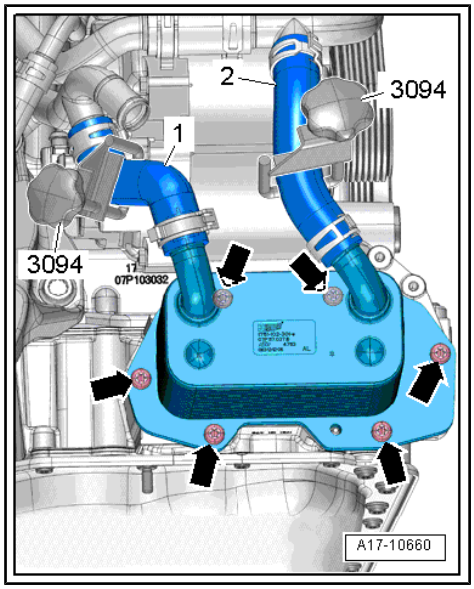

Note

Illustration shows a vehicle without auxiliary heater as an example.

Installing

Installation is carried out in the reverse order; note the following:

Note

- *Renew seals.*
- *Secure all hose connections with the correct type of hose clips (same as original equipment) ⇒ Electronic parts catalogue .*

– Check oil level ⇒ Maintenance ; Booklet 410 .

Tightening torques

- ⇒ “1.1 Exploded view - sump/oil pump”, page 159
- ⇒ General body repairs, exterior; Rep. gr. 66 ; Noise insulation; Exploded view - noise insulation

Protected by copyright. Copying for private or commercial purposes, in part or in whole, is not permitted unless authorised by AUDI AG. AUDI AG does not guarantee or accept any liability with respect to the correctness of information in this document. Copyright by AUDI AG.

3 Oil filter/oil pressure switches

⇒ “3.1 Exploded view - oil pressure switches/crankcase breather system”, page 179

⇒ “3.2 Removing and installing oil pressure switch F22 ”, page 180

⇒ “3.3 Removing and installing oil pressure switch for reduced oil pressure F378 ”, page 181

⇒ “3.4 Checking oil pressure”, page 182

3.1 Exploded view - oil pressure switches/crankcase breather system

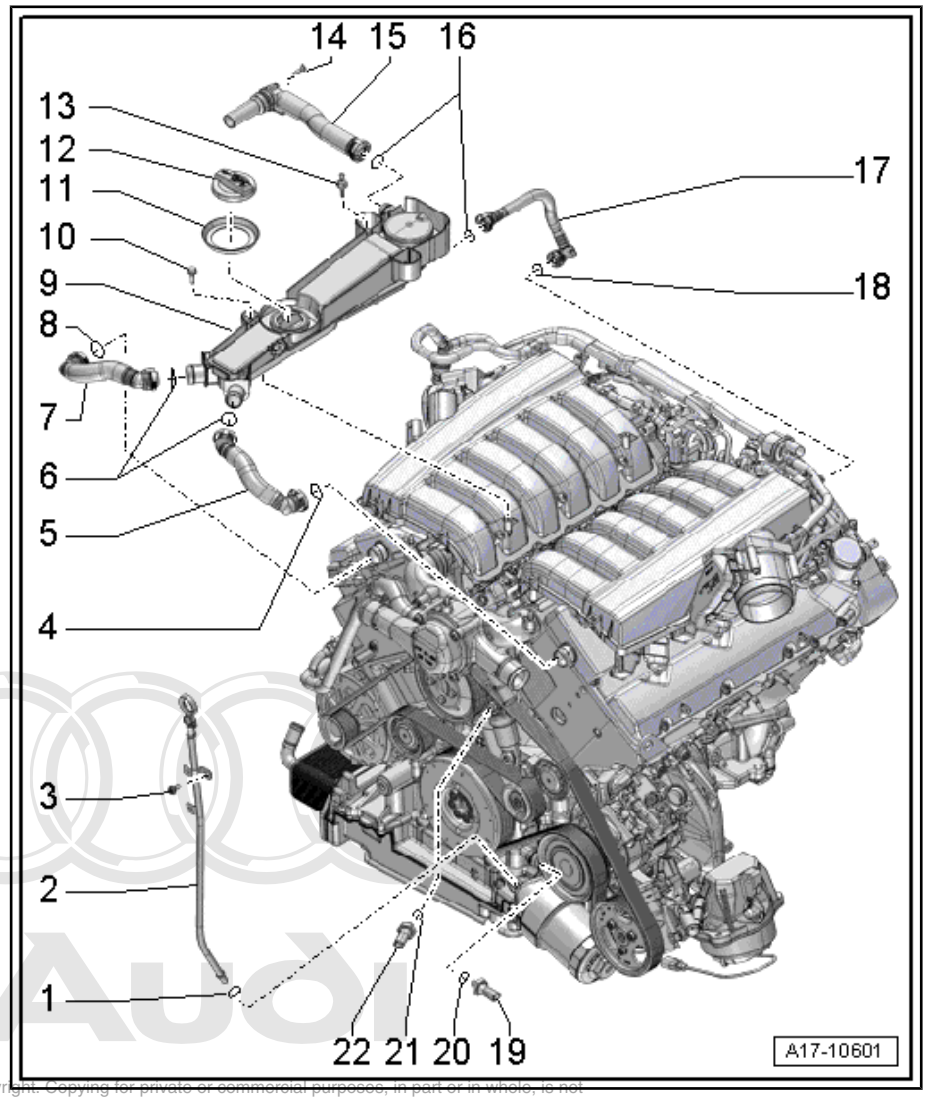

1 - O-ring
- ❑ Renew

2 - Guide tube
- ❑ For oil dipstick

3 - Bolt
- ❑ Renew
- ❑ 4 Nm + turn 45° further

4 - O-ring
- ❑ Renew

5 - Hose
- ❑ For crankcase breather

6 - O-rings
- ❑ Renew

7 - Hose
- ❑ For crankcase breather

8 - O-ring
- ❑ Renew

9 - Housing
- ❑ For oil filler neck and pressure control valve of crankcase breather system

10 - Bolt
- ❑ 8 Nm

11 - Grommet

12 - Filler cap

13 - Ball stud
- ❑ For engine cover
- ❑ 8 Nm

Protected by copyright. Copying for private or commercial purposes, in part or in whole, is not permitted unless authorised by AUDI AG. AUDI AG does not guarantee or accept any liability with respect to the correctness of information in this document. Copyright by AUDI AG.

14 - Bolt
- ❑ 8 Nm

15 - Hose
- ❑ For crankcase breather
- ❑ With heater element for crankcase breather - N79-

16 - O-rings
- ❑ Renew

17 - Hose

- ❑ For crankcase breather

18 - O-ring

- ❑ Renew

19 - Oil pressure switch for reduced oil pressure - F378-

- ❑ Opening/closing pressure 1.2 ... 1.6 bar
- ❑ Black insulation
- ❑ Checking in `Guided Fault Finding` ⇒ vehicle diagnostic tester
- ❑ Removing and installing ⇒ page 181
- ❑ 20 Nm

20 - Seal

- ❑ Renew

21 - Seal

- ❑ Renew

22 - Oil pressure switch - F22-

- ❑ Opening/closing pressure 3.8 ... 4.6 bar
- ❑ White insulation
- ❑ Checking in `Guided Fault Finding` ⇒ vehicle diagnostic tester
- ❑ Removing and installing ⇒ page 180
- ❑ 20 Nm

3.2 Removing and installing oil pressure switch - F22-

Removing

– Remove engine cover panel ⇒ page 62 .

– Remove bolt -2- and swivel dipstick guide tube slightly to the side.

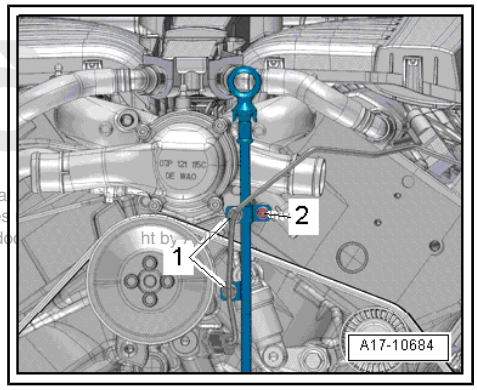

Protected by copyright. Copying for private or commercia
permitted unless authorised by AUDI AG. AUDI AG does
with respect to the correctness of information in this do

Note

Disregard -item 1-.

– Remove noise insulation (front) -1- ⇒ General body repairs, exterior; Rep. gr. 66 ; Noise insulation; Removing and installing noise insulation .

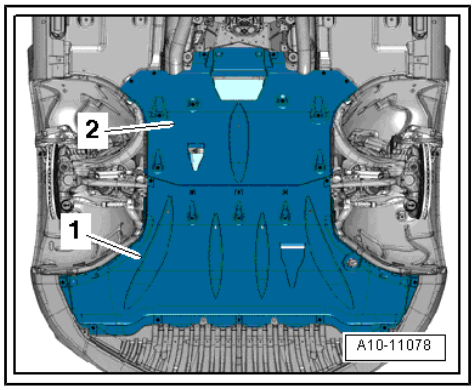

– Unplug electrical connector -arrow-.

– Unscrew oil pressure switch - F22- .

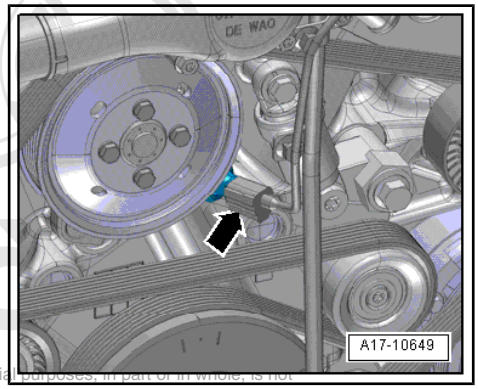

Installing

Installation is carried out in the reverse order; note the following:

Note

Renew seal.

– Install engine cover panel ⇒ page 62 .

Protected by copyright. Copying for private or commercial purposes, in part or in whole, is not permitted unless authorised by AUDI AG. AUDI AG does not guarantee or accept any liability with respect to the correctness of information in this document. Copyright by AUDI AG.

Tightening torques

- ⇒ “3.1 Exploded view - oil pressure switches/crankcase breather system”, page 179
- ⇒ General body repairs, exterior; Rep. gr. 66 ; Noise insulation; Exploded view - noise insulation

3.3 Removing and installing oil pressure switch for reduced oil pressure - F378-

Special tools and workshop equipment required

- Articulated wrench, 24 mm - T40175-

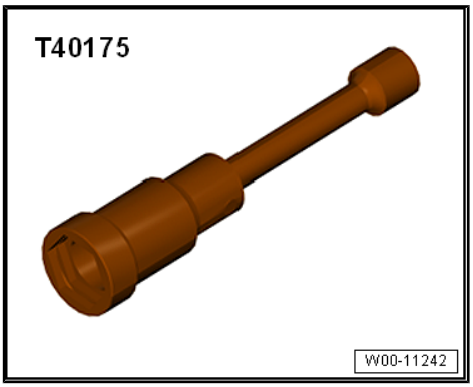

Removing

– Remove noise insulation (front) -1- ⇒ General body repairs, exterior; Rep. gr. 66 ; Noise insulation; Removing and installing noise insulation .

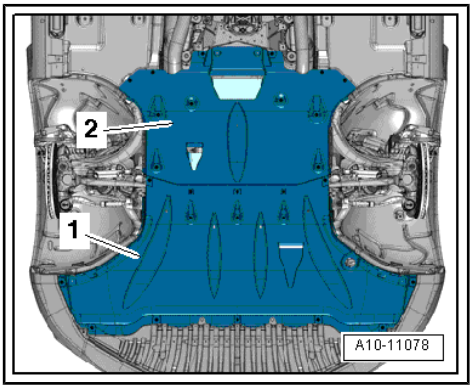

– Unplug electrical connector -arrow-.

– Use articulated wrench, 24 mm - T40175- to remove oil pressure switch for reduced oil pressure - F378- .

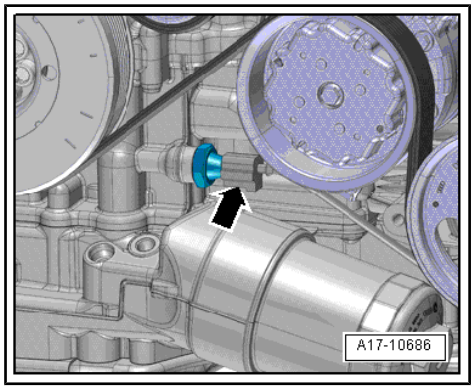

Note

Illustration shows vehicle version up to model year 2013.

Installing

Installation is carried out in the reverse order; note the following:

Note

Renew seal.

Tightening torques

- ⇒ "3.1 Exploded view - oil pressure switches/crankcase breather system", page 179
- ⇒ General body repairs, exterior; Rep. gr. 66 ; Noise insulation; Exploded view - noise insulation

3.4 Checking oil pressure

Special tools and workshop equipment required

- Oil pressure tester - V.A.G 1342-

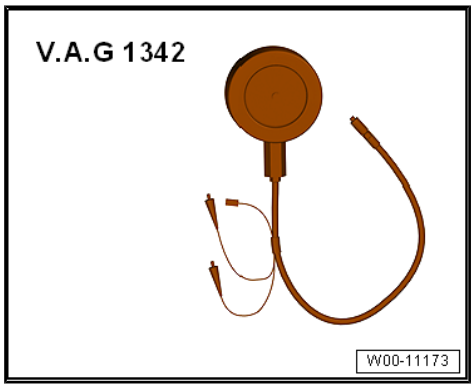

Procedure

- Oil level OK
- Engine oil temperature approx. 80 °C.

– Remove oil pressure switch for reduced oil pressure - F378- ⇒ page 181 .

– Connect oil pressure tester - V.A.G 1342- to bore for oil pressure switch.

– Screw oil pressure switch for reduced oil pressure - F378- into oil pressure tester.

– Start engine.

- Minimum oil pressure at idling speed: 0.8 bar.
- Minimum oil pressure at 3000 rpm: 3.5 bar.

Protected by copyright. Copying for private or commercial purposes, in part or in whole, is not permitted unless authorised by AUDI AG. AUDI AG does not guarantee or accept any liability with respect to the correctness of information in this document. Copyright by AUDI AG.

Assembling

– Install oil pressure switch for reduced oil pressure - F378- ⇒ page 181 .

19 – Cooling

1 Cooling system/coolant

⇒ “1.1 Connection diagram - coolant hoses”, page 183

⇒ “1.2 Checking cooling system for leaks”, page 186

⇒ “1.3 Draining and filling cooling system”, page 188

1.1 Connection diagram - coolant hoses

⇒ “1.1.1 Connection diagram - coolant hoses, vehicles without auxiliary heater”, page 183

⇒ “1.1.2 Connection diagram - coolant hoses, vehicles with auxiliary heater”, page 185

1.1.1 Connection diagram - coolant hoses, vehicles without auxiliary heater

Note

- *Blue = Large coolant circuit.*
- *Red = Small coolant circuit.*
- *Orange = Coolant circuit for ATF.*
- *Brown = Heating circuit.*
- *Green = Coolant circuit for auxiliary radiator (left-side).*

Protected by copyright. Copying for private or commercial purposes, in part or in whole, is not permitted unless authorised by AUDI AG. AUDI AG does not guarantee or accept any liability with respect to the correctness of information in this document. Copyright by AUDI AG.

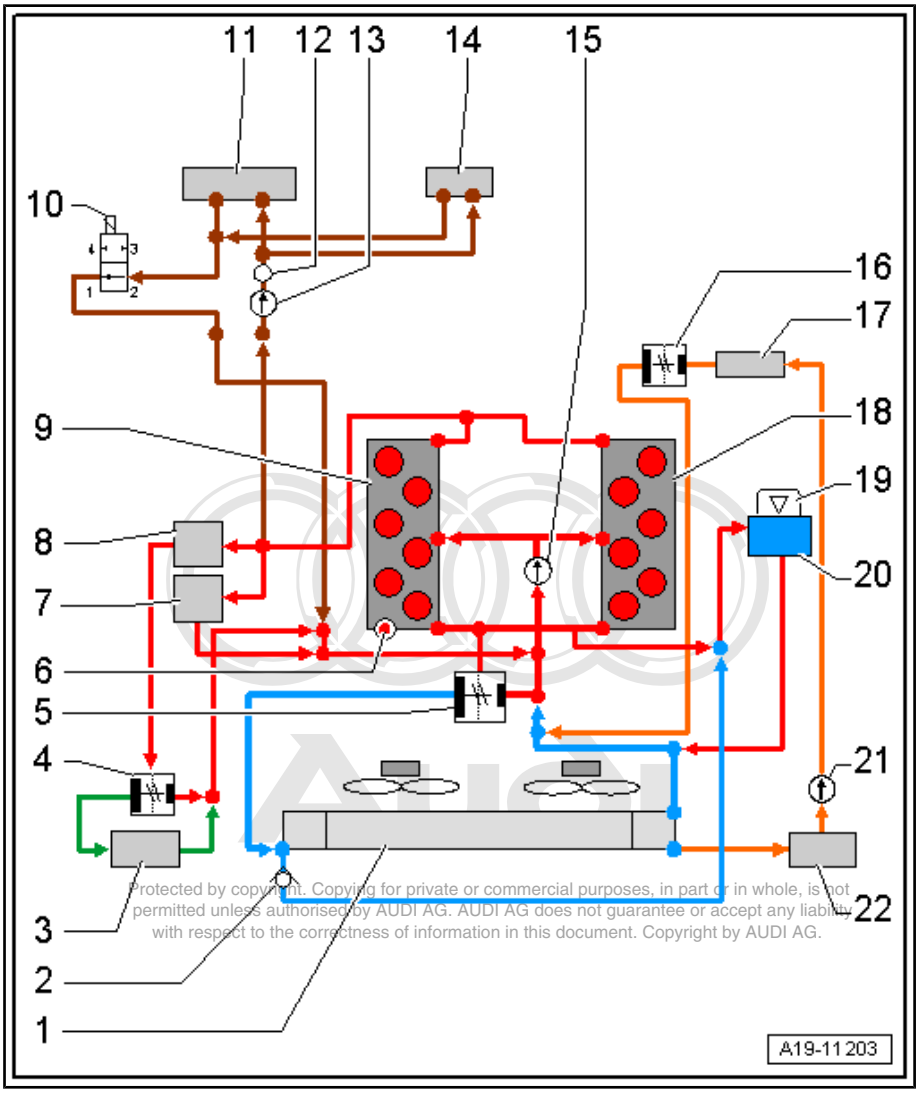

Protected by copyright. Copying for private or commercial purposes, in part or in whole, is not permitted unless authorised by AUDI AG. AUDI AG does not guarantee or accept any liability with respect to the correctness of information in this document. Copyright by AUDI AG.

1 - Radiator

2 - Non-return valve

3 - Auxiliary radiator (right-side)

- ❑ Optional equipment

4 - Thermostat

- ❑ For auxiliary radiator (right-side)

5 - Thermostat

6 - Coolant temperature sender - G62-

7 - Alternator

8 - Engine oil cooler

9 - Cylinder head

- ❑ Cylinder bank 1 (right-side)

10 - Heater coolant shut-off valve - N279-

- ❑ Removing and installing ⇒ Auxiliary heater, supplementary heater; Rep. gr. 82 ; Coolant circuit with auxiliary/supplementary heater; Removing and installing heater coolant shut-off valve

11 - Heat exchanger for heater (front)

- ❑ Removing and installing ⇒ Heating, air conditioning; Rep. gr. 87 ; Front air conditioning unit; Removing and installing heat exchanger

12 - Bleeder screw

13 - Coolant circulation pump - V50-

- ❑ Removing and installing ⇒ Heating, air conditioning; Rep. gr. 87 ; Coolant circuit

14 - Heat exchanger for heater (rear)

- ❑ Removing and installing ⇒ Heating, air conditioning; Rep. gr. 87 ; Rear air conditioning unit; Removing and installing heat exchanger

15 - Coolant pump

16 - Thermostat

- ❑ For coolant circuit for ATF

17 - ATF cooler

18 - Cylinder head

- ❑ Cylinder bank 2 (left-side)

19 - Filler cap

- ❑ Checking pressure relief valve ⇒ page 188

20 - Coolant expansion tank

21 - Continued coolant circulation pump - V51-

22 - Auxiliary radiator (left-side)

1.1.2 Connection diagram - coolant hoses, vehicles with auxiliary heater

Note

- *Blue = Large coolant circuit.*
- *Red = Small coolant circuit.*
- *Orange = Coolant circuit for ATF.*
- *Brown = Heating circuit.*
- *Green = Coolant circuit for auxiliary radiator (left-side).*

Protected by copyright. Copying for private or commercial purposes, in part or in whole, is not permitted unless authorised by AUDI AG. AUDI AG does not guarantee or accept any liability with respect to the correctness of information in this document. Copyright by AUDI AG.

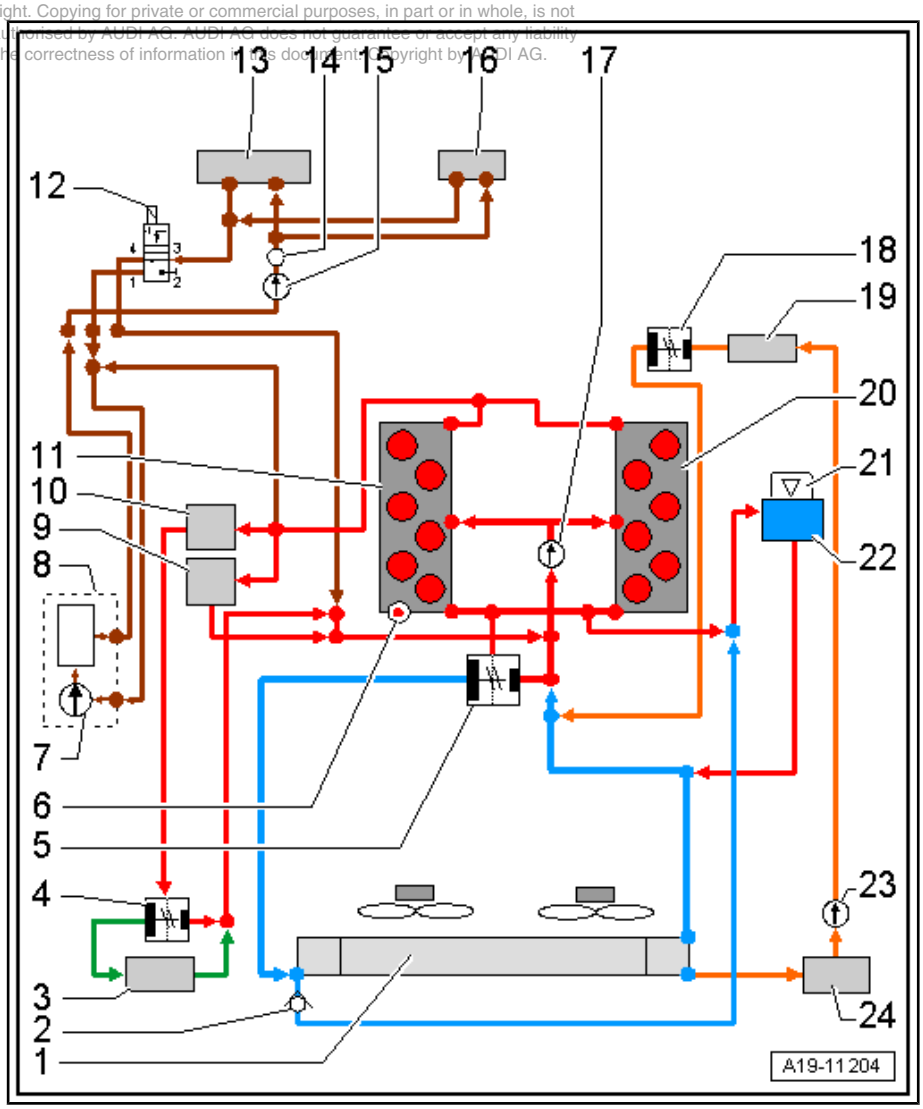

1 - Radiator

2 - Non-return valve

3 - Auxiliary radiator (right-side)

- ❑ Optional equipment

4 - Thermostat

- ❑ For auxiliary radiator (right-side)

5 - Thermostat

6 - Coolant temperature sender - G62-

7 - Alternator

8 - Circulation pump - V55-

- ❑ Removing and installing ⇒ Auxiliary heater, supplementary heater; Rep. gr. 82 ; Auxiliary/supplementary heater; Removing and installing auxiliary/supplementary heater

9 - Auxiliary heater

- ❑ Removing and installing ⇒ Auxiliary heater, supplementary heater; Rep. gr. 82 ; Auxiliary/supplementary heater; Removing and installing circulation pump - V55-

10 - Engine oil cooler

11 - Cylinder head

- ❑ Cylinder bank 1 (right-side)

12 - Heater coolant shut-off valve - N279-

- ❑ Removing and installing ⇒ Auxiliary heater, supplementary heater; Rep. gr. 82 ; Coolant circuit with auxiliary/supplementary heater; Removing and installing heater coolant shut-off valve

13 - Heat exchanger for heater (front)

- ❑ Removing and installing ⇒ Heating, air conditioning; Rep. gr. 87 ; Front air conditioning unit; Removing and installing heat exchanger

14 - Bleeder screw

15 - Coolant circulation pump - V50-

- ❑ Removing and installing ⇒ Heating, air conditioning; Rep. gr. 87 ; Coolant circuit

16 - Heat exchanger for heater (rear)

- ❑ Removing and installing ⇒ Heating, air conditioning; Rep. gr. 87 ; Rear air conditioning unit; Removing and installing heat exchanger

17 - Coolant pump

18 - Thermostat

- ❑ For coolant circuit for ATF

19 - ATF cooler

20 - Cylinder head

- ❑ Cylinder bank 2 (left-side)

21 - Filler cap

- ❑ Checking pressure relief valve ⇒ page 188

22 - Coolant expansion tank

23 - Continued coolant circulation pump - V51-

24 - Auxiliary radiator (left-side)

1.2 Checking cooling system for leaks

Special tools and workshop equipment required

- ♦ Cooling system tester - V.A.G 1274 B-

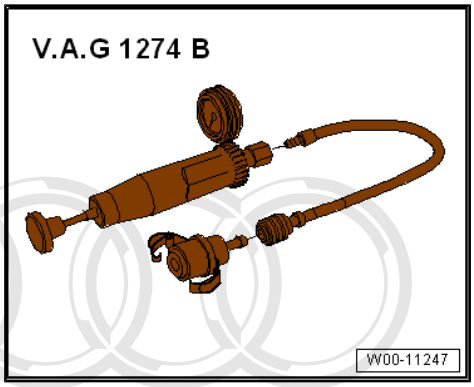

- ♦ Adapter for cooling system tester - V.A.G 1274/8-

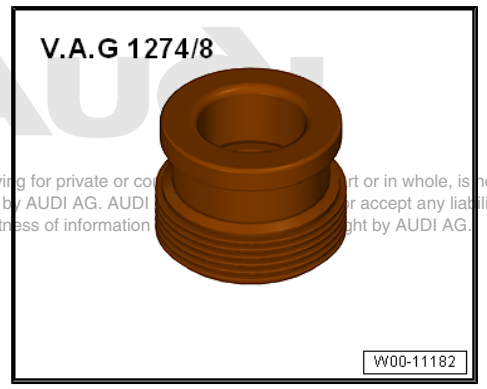

Protected by copyright. Copyi g for private or co rt or in whole, is not permitted unless authorised b AUDI AG. AUDI r accept any liat lity with respect to the correctness of information ght by AUDI AG.

- Adapter for cooling system tester - V.A.G 1274/9-

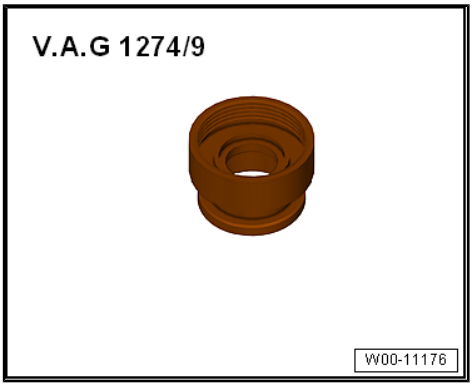

Protected by copyright. Copying for private or commercial purposes, in part or in whole, is not permitted unless authorised by AUDI AG. AUDI AG does not guarantee or accept any liability with respect to the correctness of information in this document. Copyright by AUDI AG.

Procedure

- Engine must be warm.

> ⚠ **WARNING**
>
> *Hot steam/hot coolant can escape - risk of scalding.*
>
> - *The cooling system is under pressure when the engine is hot.*
> - *Cover filler cap on coolant expansion tank with a cloth and open carefully to dissipate pressure.*

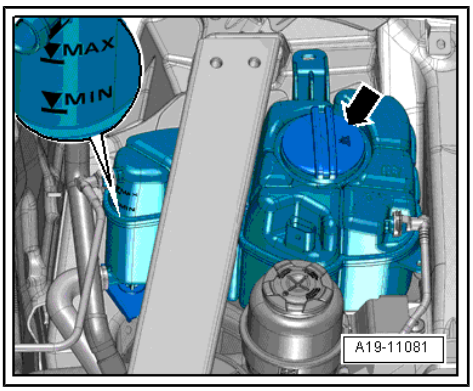

– Open filler cap -arrow- on coolant expansion tank.

– Fit cooling system tester - V.A.G 1274 B- with adapter - V.A.G 1274/8- onto coolant expansion tank.

– Using hand pump on cooling system tester, build up a pressure of approx. 1.0 bar.

– If this pressure is not maintained, locate and rectify leaks.

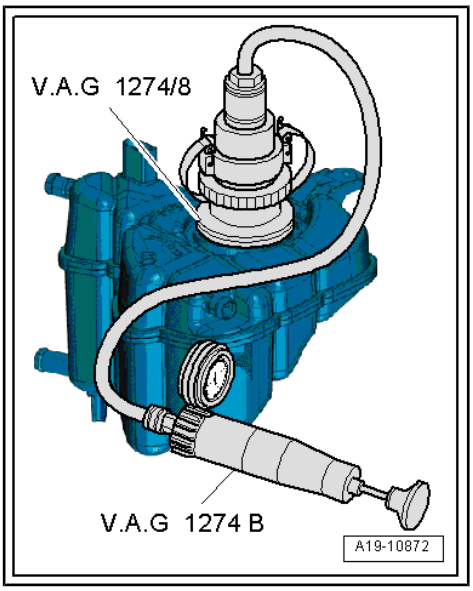

Checking pressure relief valve in filler cap

– Fit cooling system tester - V.A.G 1274 B- with adapter - V.A.G 1274/9- onto filler cap.

– Build up pressure with hand pump on cooling system tester.

• The pressure relief valve should open at a pressure of 1.4 ... 1.6 bar.

– Renew filler cap if pressure relief valve does not open as described.

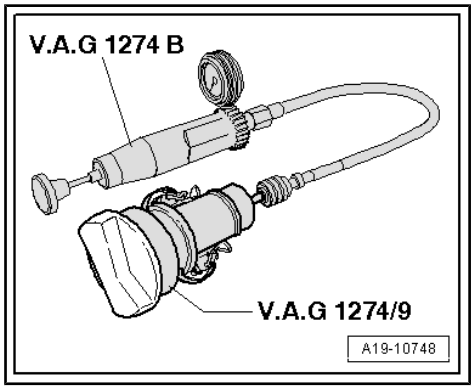

1.3 Draining and filling cooling system

Special tools and workshop equipment required

- Adapter for cooling system tester - V.A.G 1274/8-
- Pipe for cooling system tester - V.A.G 1274/10-
- Cooling system charge unit - VAS 6096-
- Drip tray for workshop hoist - VAS 6208-
- Hose clip pliers - VAS 6362-
- Refractometer - T10007 A-

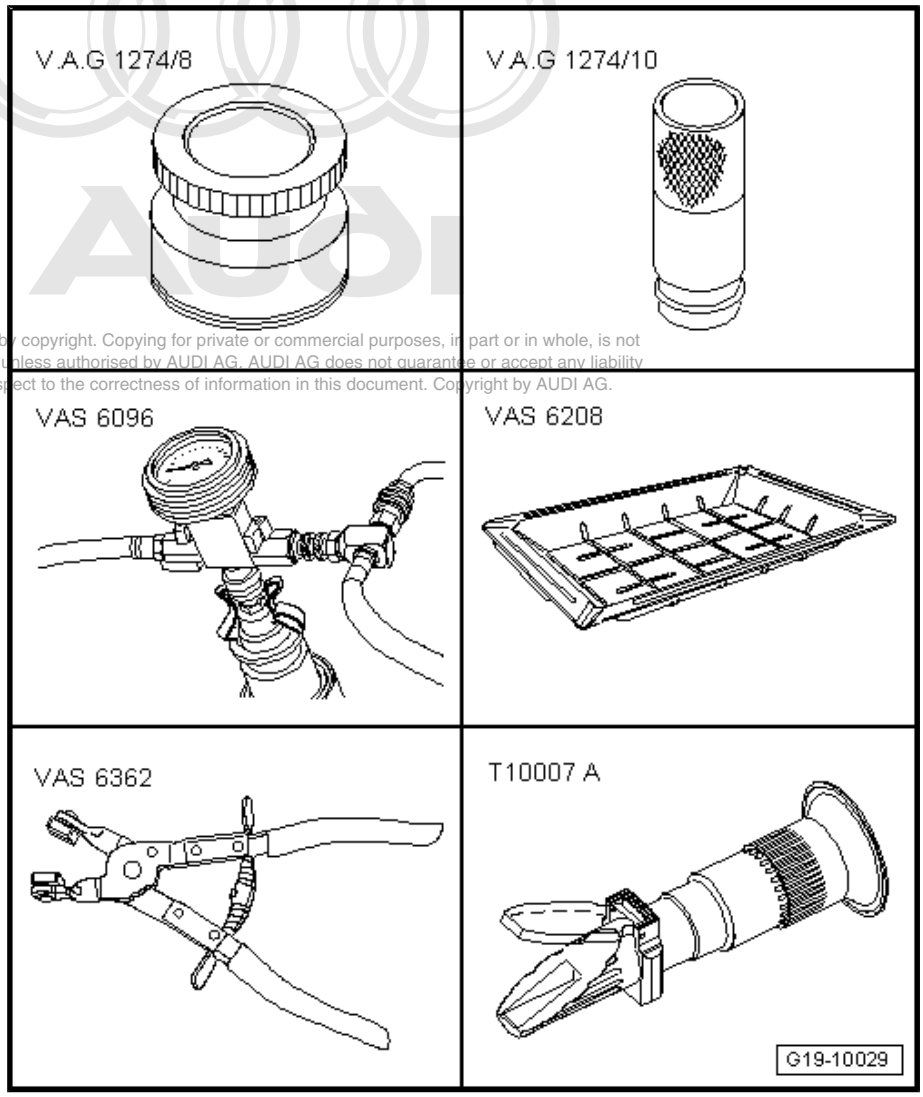

Protected by copyright. Copying for private or commercial purposes, in part or in whole, is not permitted unless authorised by AUDI AG. AUDI AG does not guarantee or accept any liability with respect to the correctness of information in this document. Copyright by AUDI AG.

Draining

WARNING

Hot steam/hot coolant can escape - risk of scalding.

- *The cooling system is under pressure when the engine is hot.*
- *To allow pressure to dissipate, cover filler cap on coolant expansion tank with cloth and open carefully.*

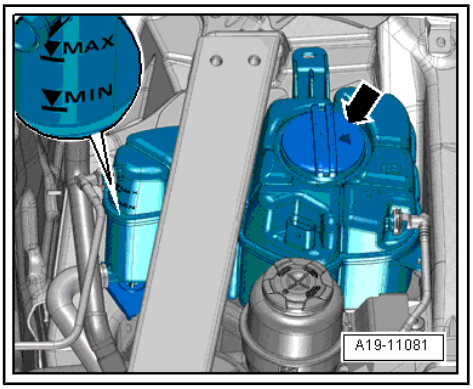

– Open filler cap -arrow- on coolant expansion tank.

– Remove noise insulation panels -1- and -2- ⇒ General body repairs, exterior; Rep. gr. 66 ; Noise insulation; Removing and installing noise insulation .

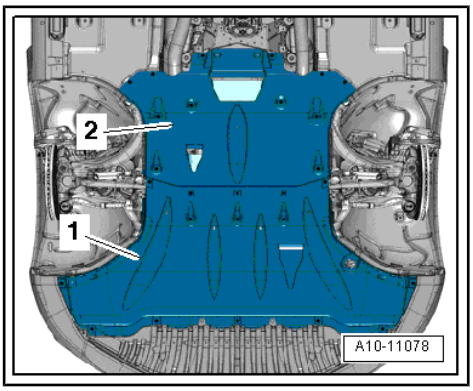

Note

Collect drained coolant in a clean container for re-use or disposal.

– Place drip tray for workshop hoist - VAS 6208- beneath engine.

– Release hose clip -arrow-, disconnect coolant hose from coolant pipe (bottom left) and drain off coolant.

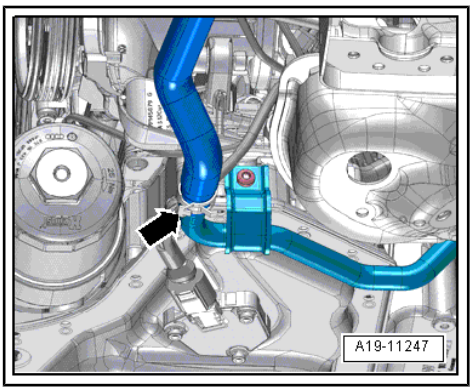

– Lift retaining clip -2-, disconnect coolant hose from radiator and drain off coolant.

Protected by copyright. Copying for private or commercial purposes, in part or in whole, is not permitted unless authorised by AUDI AG. AUDI AG does not guarantee or accept any liability with respect to the correctness of information in this document. Copyright by AUDI AG.

Note

Disregard -item 1-.

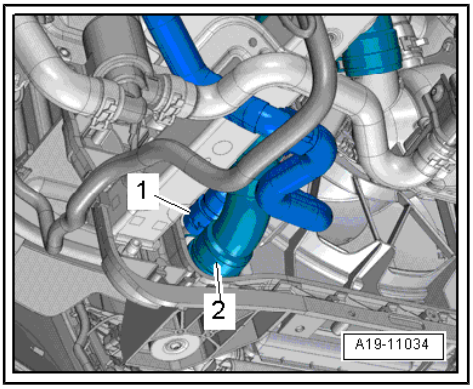

– Release hose clip -arrow-, disconnect coolant hose from engine oil cooler and drain off coolant.

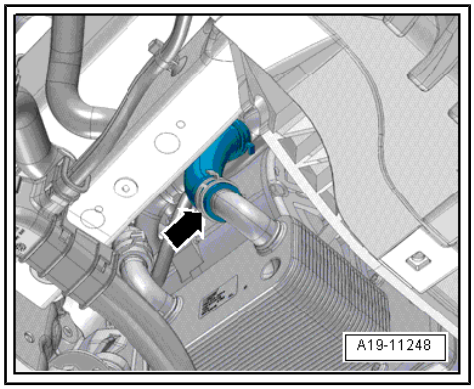

Filling

- Ignition off.

Caution

◆ *Always use cooling system charge unit - VAS 6096- when filling the cooling system. Otherwise, the automatic gearbox could malfunction.*

Caution

Always use distilled water for mixing coolant additives as this ensures optimum corrosion protection.

Protected by copyright. Copying for private or commercial purposes, in part or in whole, is not permitted unless authorised by AUDI AG. AUDI AG does not guarantee or accept any liability with respect to the correctness of information in this document. Copyright by AUDI AG.

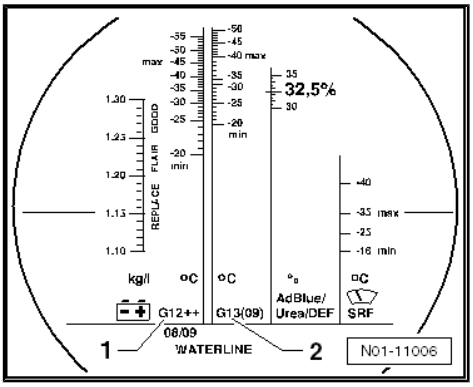

Note

- *The effectiveness of the coolant is greatly influenced by the quality of the water with which it is mixed. Because water may contain different substances depending on the country or even the region, the water quality to be used for cooling systems has been specified. Distilled water meets all the requirements and is therefore recommended for use when topping up or filling up with coolant.*
- *Use only coolant additives listed in the ⇒ Electronic parts catalogue (ETKA) . Other coolant additives could seriously impair in particular the anti-corrosion properties. The resulting damage could lead to loss of coolant and consequently to serious engine damage.*
- *Coolant with the recommended mixture ratio prevents frost and corrosion damage and stops scaling. At the same time it raises the boiling point of the fluid in the system. For this reason the cooling system must be filled all year round with the correct coolant additive.*
- *Because of its high boiling point, the coolant improves engine reliability under heavy loads, particularly in countries with tropical climates.*
- *The refractometer - T10007A- MUST be used to determine the current level of frost protection.*
- *The mixture must guarantee frost protection down to -25 °C (in countries with arctic climate: down to -36 °C). The amount of antifreeze can only be increased if greater frost protection is required in very cold climates. This must only be up to -48 °C, however, as otherwise the cooling efficiency of the coolant is impaired.*
- *The coolant concentration must not be reduced by adding water even in warmer seasons and in warmer countries. Frost protection must be provided to at least -25 °C.*
- *Read off the level of frost protection on the scale for the relevant coolant additive.*
- *The temperature indicated on the refractometer - T10007A- corresponds to the temperature at which the first ice crystals can form in the coolant.*
- *Do not reuse coolant.*
- *Only use water/coolant additive as a lubricant for coolant hoses.*

Recommended mixture ratio for coolant

- Coolant (40 %) and water (60 %) for frost protection to -25 °C
- Coolant (50 %) and water (50 %) for frost protection to -36 °C
- Coolant: ⇒ Electronic parts catalogue (ETKA)

Protected by copyright. Copying for private or commercial purposes, in part or in whole, is not permitted unless authorised by AUDI AG. AUDI AG does not guarantee or accept any liability with respect to the correctness of information in this document. Copyright by AUDI AG.

Procedure

– Connect coolant hose to coolant pipe (bottom left) with hose clip -arrow-.

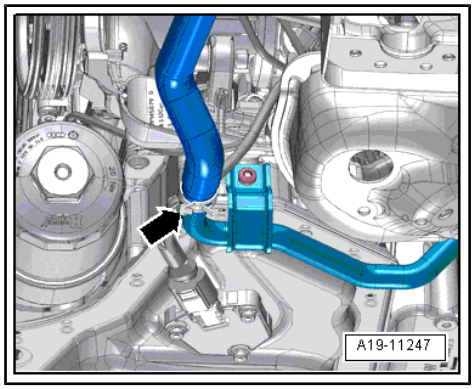

– Connect coolant hose (bottom left) -2- to radiator with plug-in connector ⇒ page 221 .

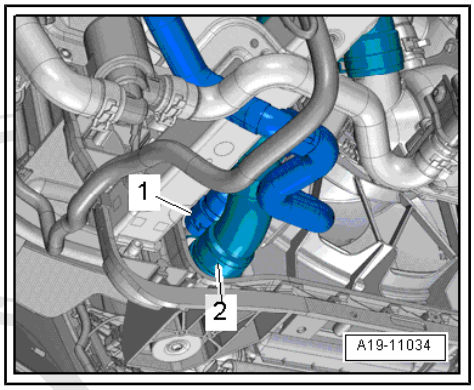

– Connect coolant hose to engine oil cooler with hose clip -arrow-.

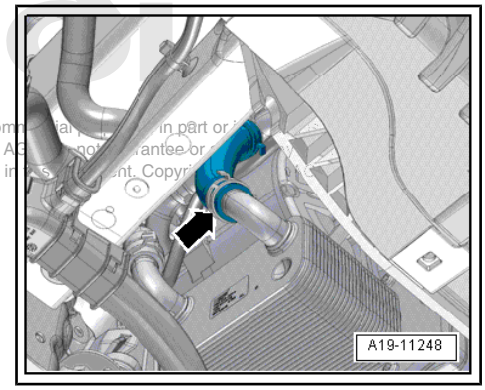

Protected by copyright. Copying for private or com
permitted unless authorised by AUDI AG. AUDI A
with respect to the correctness of information i

– Fill reservoir of -VAS 6096- with at least 15 litres of premixed coolant (according to recommended ratio).

– Fit adapter for cooling system tester - V.A.G 1274/8- onto coolant expansion tank.

– Attach cooling system charge unit - VAS 6096- to adapter - V.A.G 1274/8- .

– Run vent hose -1- into a small container -2-.

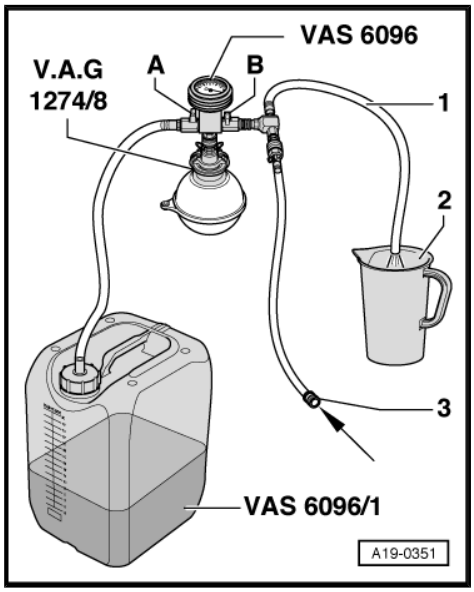

Note

The vented air draws along a small amount of coolant, which should be collected.

– Close both valves -A- and -B- (turn lever at right angles to direction of flow).

– Connect hose -3- to compressed air.

• Pressure: 6 ... 10 bar.

– Open valve -B- by setting lever in direction of flow.

• The suction jet pump generates a partial vacuum in the cooling system; the needle on the gauge should move into the green zone.

– Also briefly open valve -A- (turn lever in direction of flow) so that hose on reservoir of -VAS 6096- can fill with coolant.

– Close valve -A- again.

– Leave valve -B- open for another 2 minutes.

• The suction jet pump continues to generate a partial vacuum in the cooling system; the needle on the gauge should remain in the green zone.

– Close valve -B-.

• The needle on the gauge should stop in the green zone. The vacuum level in the cooling system is then sufficient for subsequent filling.

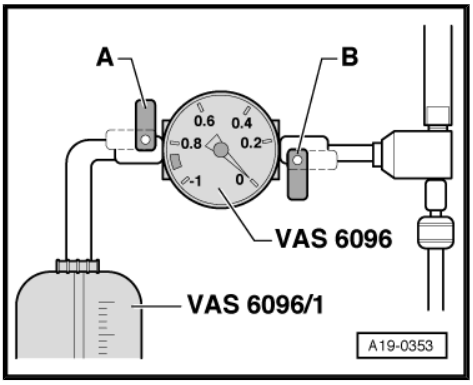

Note

♦ *If the needle does not reach the green zone, repeat the process.*

♦ *Check cooling system for leaks if the vacuum is not maintained.*

– Detach compressed air hose.

– Open valve -A-.

• The vacuum in the cooling system causes the coolant to be drawn out of the reservoir of -VAS 6096- ; the cooling system is then filled.

– Detach cooling system charge unit - VAS 6096- from adapter -V.A.G 1274/8- on coolant expansion tank.

Reproduction or copying for private or commercial purposes, in part or in whole, is not permitted unless authorised by AUDI AG. AUDI AG does not guarantee or accept any liability with respect to the correctness of information in this document. Copyright by AUDI AG.

– Attach pipe -V.A.G 1274/10- onto adapter -V.A.G 1274/8- .

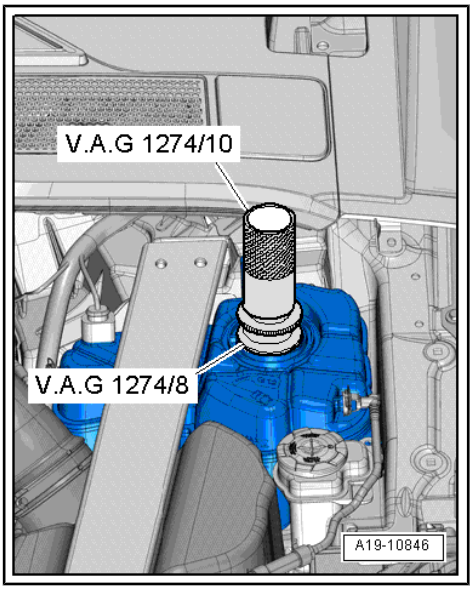

– Remove plenum chamber cover -2- ⇒ General body repairs, exterior; Rep. gr. 50 ; Bulkhead; Removing and installing plenum chamber cover .

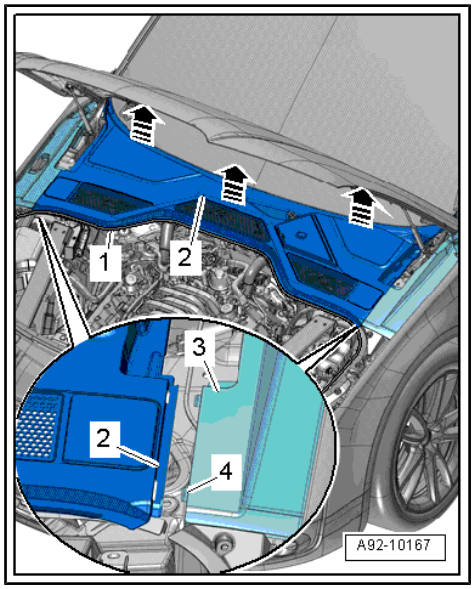

Vehicles up to model year 2013:

– Open bleeder screw -arrow-.

– Fill up with coolant until it flows out at bleeder hole in coolant hose.

– Close bleeder screw.

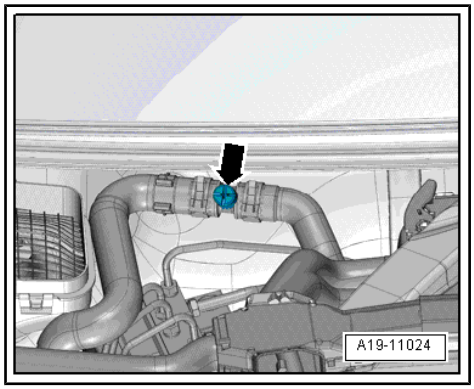

Vehicles from model year 2014 onwards:

– Open bleeder screw -1-.

– Fill up with coolant until it flows out at bleeder hole in coolant hose.

– Close bleeder screw.

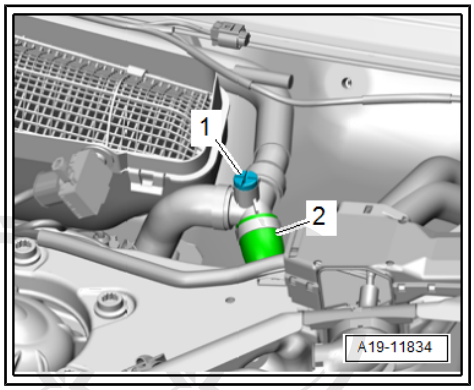

Note

Disregard -item 2-.

All vehicles (continued):

– On vehicles with auxiliary heater, switch heater on (for about 30 seconds) and then off again.

Protected by copyright. Copying for private or commercial purposes, in part or in whole, is not permitted unless authorised by AUDI AG. AUDI AG does not guarantee or accept any liability with respect to the correctness of information in this document. Copyright by AUDI AG.

– Tighten filler cap -arrow- on coolant expansion tank (make sure it engages).
– Start engine.

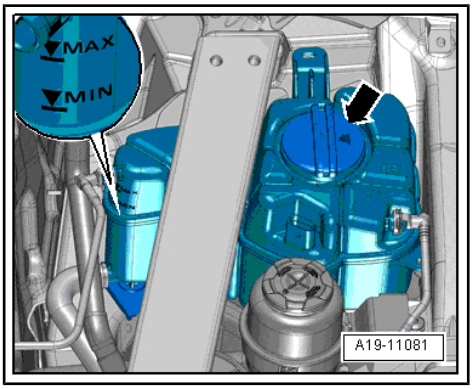

Protected by copyright. Copying for private or commercial purposes, in part or in whole, is not permitted unless authorised by AUDI AG. AUDI AG does not guarantee or accept any liability with respect to the correctness of information in this document. Copyright by AUDI AG.

Time period	Engine speed	Air conditioner / heater setting
3 minutes	2000 rpm	• AC “OFF”, LED in AC button not lit • Heating at “HI”, select lowest possible blower speed (= 0)
Until both large coolant hoses at radiator become warm	Idling	• AC “OFF” • Heating at “HI”
2 minutes	2000 rpm	• AC “OFF” • Heating at “HI”

– Switch off ignition and allow engine to cool down.
– Install plenum chamber cover ⇒ General body repairs, exterior; Rep. gr. 50 ; Bulkhead; Removing and installing plenum chamber cover .
– Check coolant level.
• The coolant level must be at the MAX marking when the engine is cold.
• The coolant level can be above the MAX marking when the engine is warm.

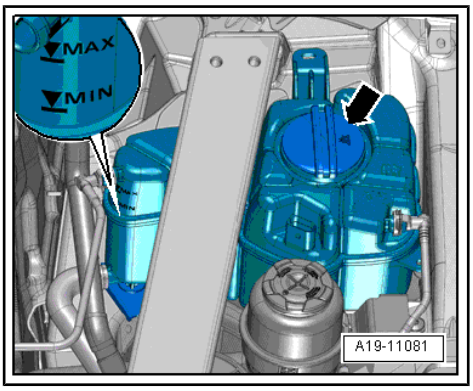

Tightening torques

♦ ⇒ General body repairs, exterior; Rep. gr. 66 ; Noise insulation; Exploded view - noise insulation

2 Coolant pump/thermostat assembly

⇒ “2.1 Exploded view - coolant pump”, page 196

⇒ “2.2 Exploded view - thermostat”, page 197

⇒ “2.3 Removing and installing electrical coolant pump”, page 197

⇒ “2.4 Removing and installing coolant pump”, page 198

⇒ “2.5 Removing and installing thermostat”, page 200

⇒ “2.6 Checking thermostat”, page 204

⇒ “2.7 Removing and installing coolant temperature sender G62 ”, page 204

2.1 Exploded view - coolant pump

1 - Coolant pump
- ❑ Removing and installing ⇒ page 198

2 - Poly V-belt pulley

3 - Bolt
- ❑ 8 Nm

4 - Bolt
- ❑ 10 Nm

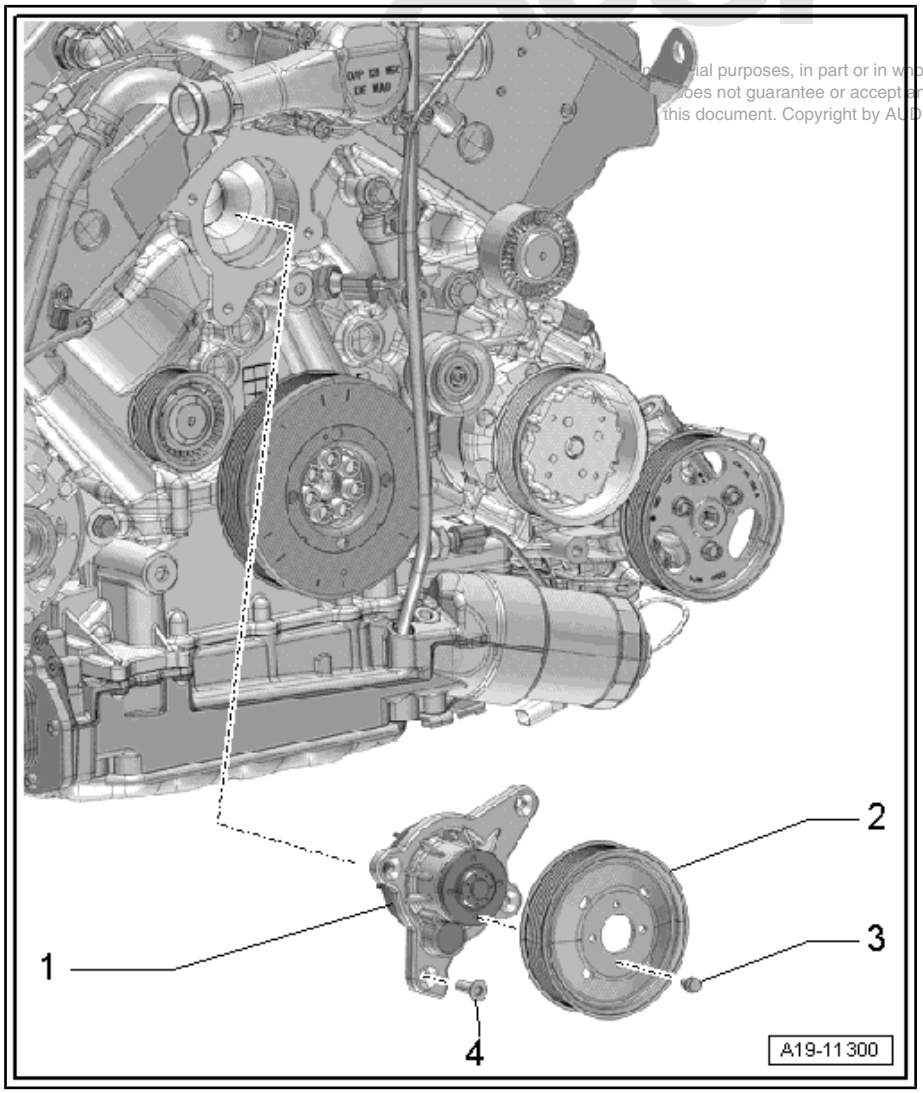

ial purposes, in part or in whole, is not
oes not guarantee or accept any liability
this document. Copyright by AUDI AG.

2.2 Exploded view - thermostat

1 - Bolt
- ❑ 9 Nm

2 - Cover
- ❑ For thermostat housing

3 - O-ring
- ❑ Renew

4 - Thermostat
- ❑ Removing and installing ⇒ page 200

5 - Scraper ring
- ❑ For thermostat
- ❑ Not supplied separately

6 - Compression spring
- ❑ Not supplied separately

7 - Mounting pin
- ❑ For engine cover
- ❑ 4.5 Nm

8 - Connecting pipe
- ❑ Renew after removing

9 - Seal
- ❑ Renew

10 - Housing
- ❑ For thermostat
- ❑ Removing and installing ⇒ page 202

11 - Bolt
- ❑ Renew
- ❑ 20 Nm

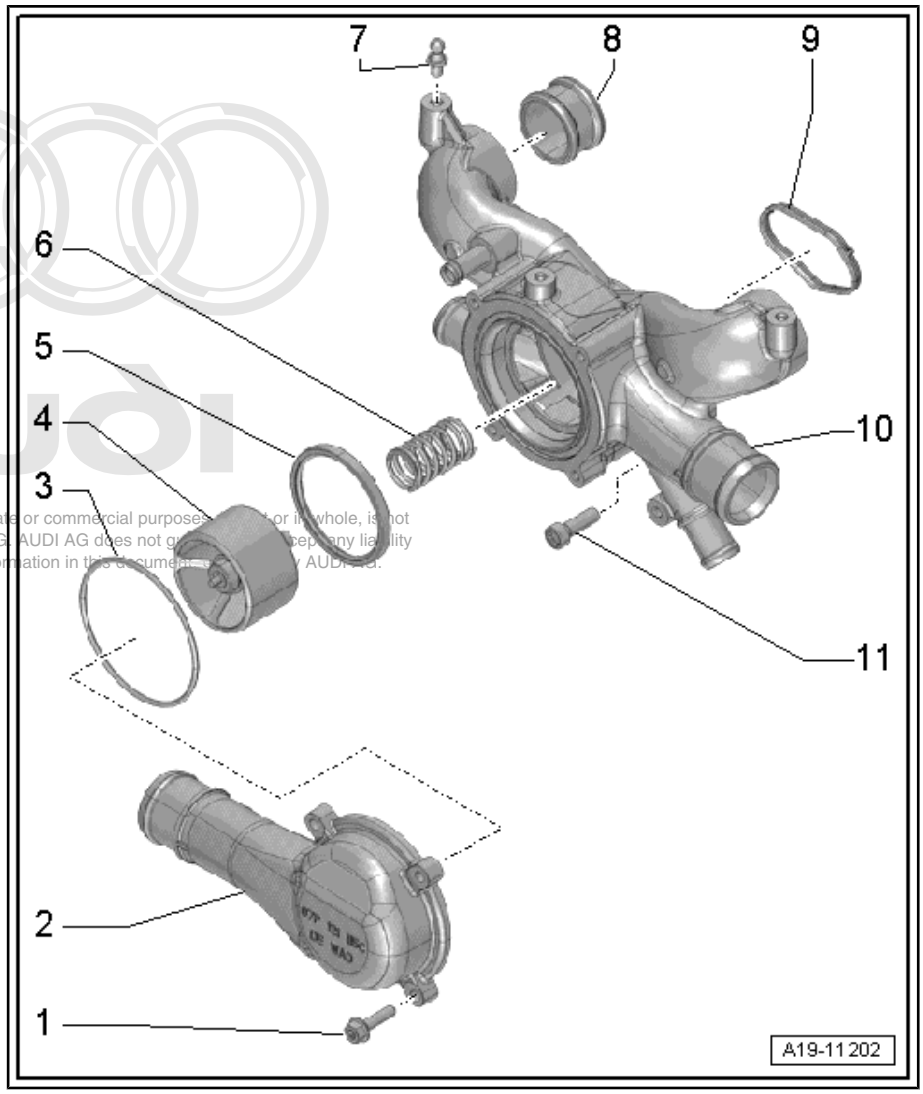

Protected by copyright. Copying for private or commercial purposes, in part or in whole, is not permitted unless authorised by AUDI AG. AUDI AG does not guarantee or accept any liability with respect to the correctness of information in this document. Copyright by AUDI AG.

2.3 Removing and installing electrical coolant pump

Special tools and workshop equipment required

- ♦ Hose clamps, up to 25 mm - 3094-

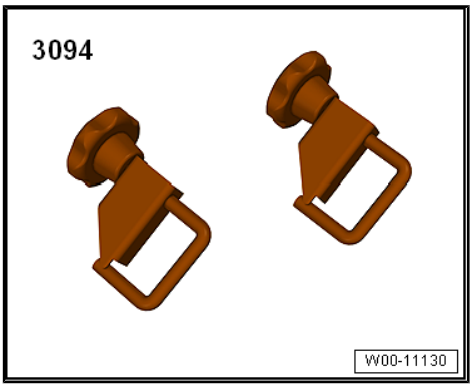

♦ Hose clip pliers - VAS 6362-

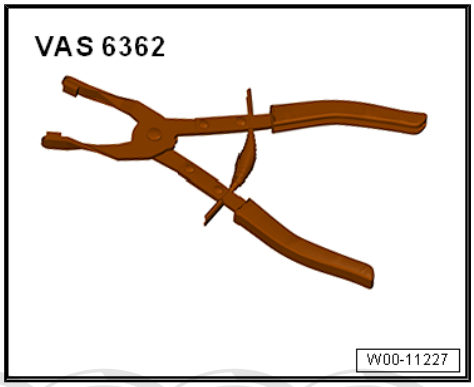

Removing

– Detach auxiliary radiator from bracket and move clear to the side ⇒ page 229 .

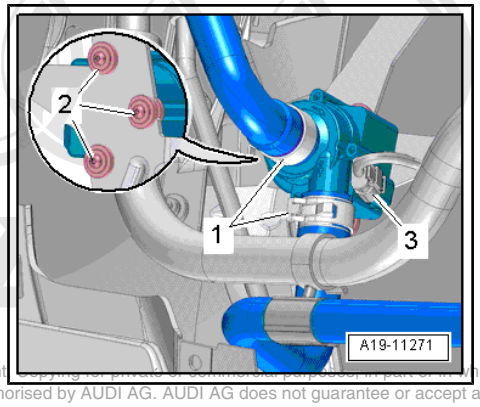

Note

Place a cloth underneath to catch escaping coolant and engine oil.

– Clamp off coolant hoses using hose clamps up to 25 mm - 3094- , release hose clips -1- and disconnect hoses.

– Unplug electrical connector -3-.

– Remove bolts -2- and detach continued coolant circulation pump - V51- .

Protected by copyright. Copying for private or commercial purposes, in part or in whole, is not permitted unless authorised by AUDI AG. AUDI AG does not guarantee or accept any liability with respect to the correctness of information in this document. Copyright by AUDI AG.

Installing

Installation is carried out in the reverse order; note the following:

– Install auxiliary radiator ⇒ page 229 .

– Check coolant level ⇒ page 195 .

Tightening torques

♦ ⇒ “4.1 Exploded view - radiator/radiator fans”, page 220

2.4 Removing and installing coolant pump

Special tools and workshop equipment required

♦ Pin wrench - 3212-

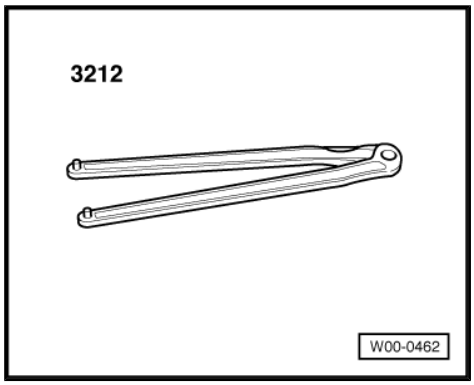

♦ Hose clip pliers - VAS 6362-

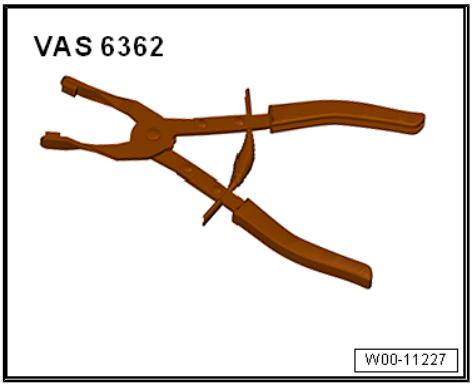

Removing

– Remove engine cover panel ⇒ page 62 .

– Drain coolant ⇒ page 188 .

– Release hose clips -arrows- and detach coolant hoses.

Copyright by AUDI AG. Distribution to third parties and any other use of this document, or of any part thereof, outside the company whole, is not permitted unless authorised by AUDI AG. AUDI AG does not guarantee or accept any liability with respect to the correctness of information in this document. Copyright by AUDI AG.

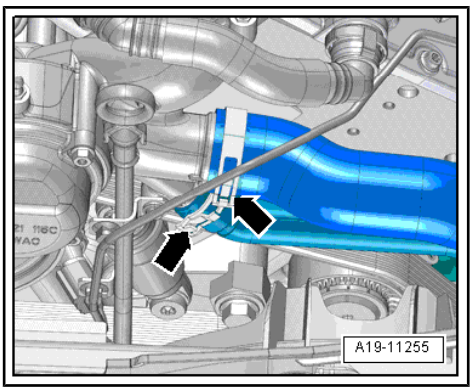

– To slacken poly V-belt turn tensioner in clockwise direction -arrow-.

– Remove poly V-belt from coolant pump and release tensioner.

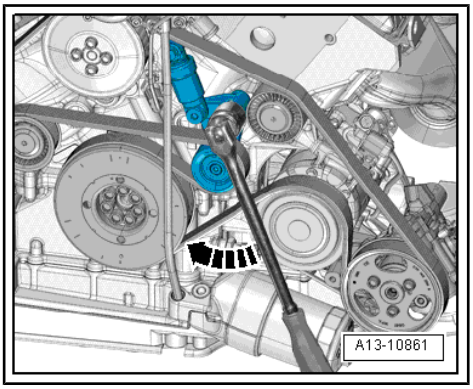

Note

Illustration shows vehicle version up to model year 2013.

– Loosen bolts -arrows- for coolant pump pulley (counterhold with pin wrench - 3212-).

– Remove bolts and take off poly V-belt pulley.

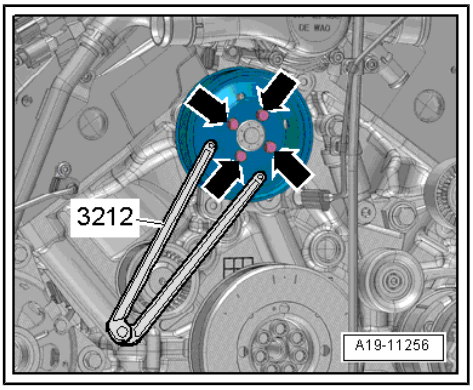

– Remove bolts -arrows- and detach coolant pump.

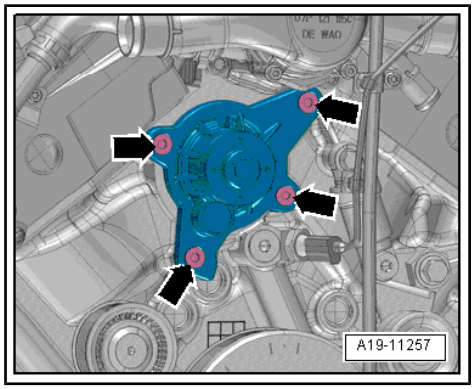

Installing

Installation is carried out in the reverse order; note the following:

Note

- *Renew seals and/or gaskets.*
- *Secure all hose connections with the correct type of hose clips (same as original equipment) ⇒ Electronic parts catalogue .*

– Clean surfaces; they must be free of oil and grease.

– Install poly V-belt ⇒ page 66 .

– Install engine cover panel ⇒ page 62 .

Note

Do not reuse coolant.

– Fill up with coolant ⇒ page 190 .

Protected by copyright. Copying for private or commercial purposes, in part or in whole, is not permitted unless authorised by AUDI AG. AUDI AG does not guarantee or accept any liability with respect to the correctness of information in this document. Copyright by AUDI AG.

2.5 Removing and installing thermostat

⇒ "2.5.1 Removing and installing thermostat", page 200

⇒ "2.5.2 Removing and installing thermostat housing", page 202

2.5.1 Removing and installing thermostat

Removing

– Remove engine cover panel ⇒ page 62 .

– Drain coolant ⇒ page 188 .

– Remove air cleaner housing (right-side) ⇒ page 245 .

– Lift retaining clip -1- and disconnect coolant hose (top right) from radiator.

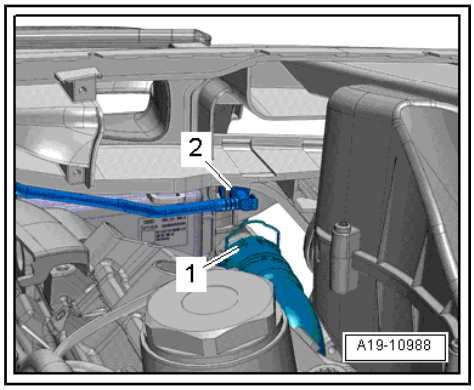

Note

Disregard -item 2-.

– Release fasteners -arrows-, detach release cable -1- from lock carrier and press down.

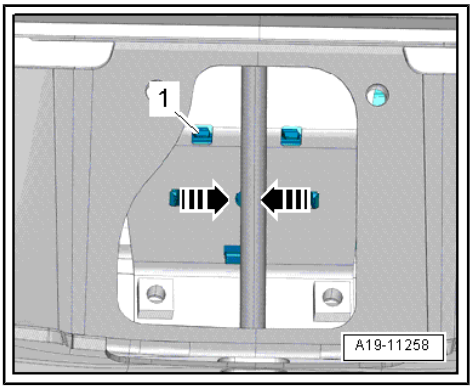

– Remove bolts -arrows- and detach cover -1-; to do so, press thermostat into housing.

– Detach thermostat.

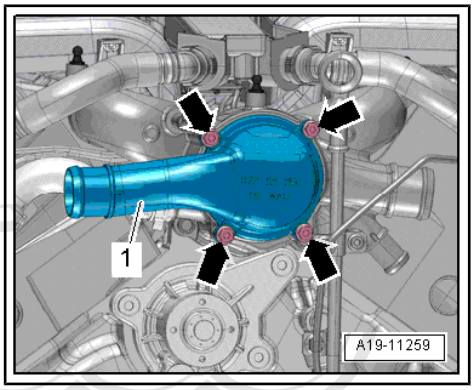

Installing

Installation is carried out in the reverse order; note the following:

Note

- *Fit new O-ring.*
- *Secure all hose connections with the correct type of hose clips (same as original equipment) ⇒ Electronic parts catalogue .*

– Position spring -1- centrally on guides -arrows-.

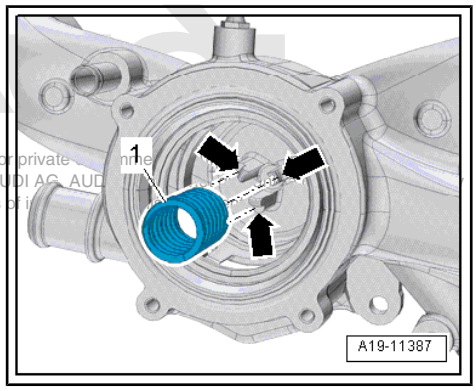

Protected by copyright. Copying for private or commercial purposes, in part, is not permitted unless authorised by AUDI AG. AUDI AG does not guarantee or assume any liability with respect to the correctness of information.

– Place cover -1- centrally onto housing -3-, ensuring that thermostat -2- is correctly seated.

– Install air cleaner housing (right-side) ⇒ page 245 .

– Connect coolant hose with plug-in connector ⇒ page 221 .

– Install engine cover panel ⇒ page 62 .

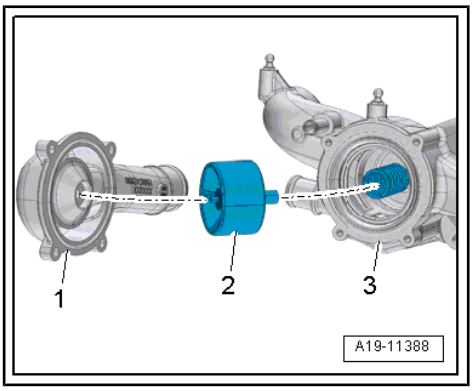

Note

Do not reuse coolant.

– Fill up with coolant ⇒ page 190 .

Tightening torques

- ⇒ “2.2 Exploded view - thermostat”, page 197

2.5.2 Removing and installing thermostat housing

Special tools and workshop equipment required

- Hose clip pliers - VAS 6340-

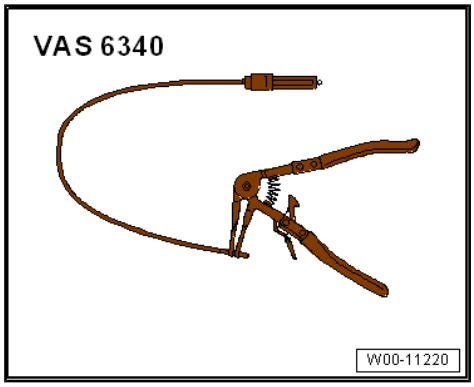

- Hose clip pliers - VAS 6362-

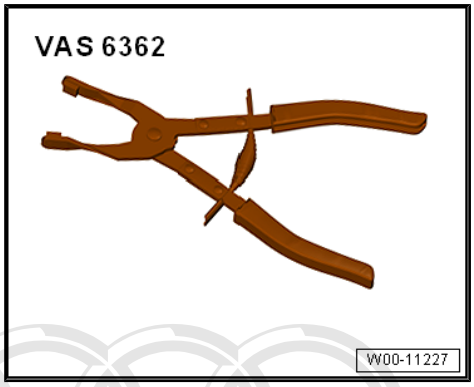

Removing

– Remove engine cover panel ⇒ page 62 .

– Drain coolant ⇒ page 188 .

– Remove air cleaner housing (right-side) ⇒ page 245 .

– Remove bolts -1- and ball studs -2-.

– Press release tabs and disconnect crankcase breather hoses -arrows-.

– Move housing for oil filler neck to side.

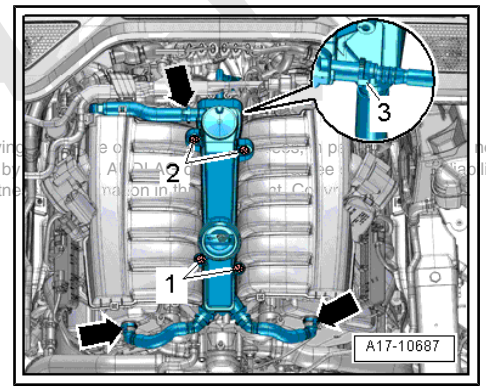

Protected by copyright. Copying permitted unless authorised by AUDI AG. No liability with respect to the correctness of information in this document.

Note

Disregard -item 3-.

– Remove bolt -2- and swivel dipstick guide tube slightly to the side.

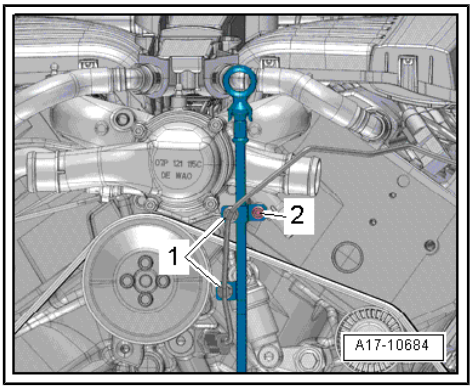

Note

Disregard -item 1-.

– Lift retaining clip -1- and disconnect coolant hose (top right) from radiator.

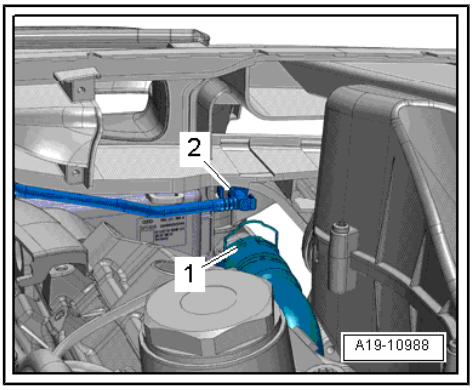

Note

Disregard -item 2-.

– Release fasteners -arrows-, detach release cable -1- from lock carrier and press down.

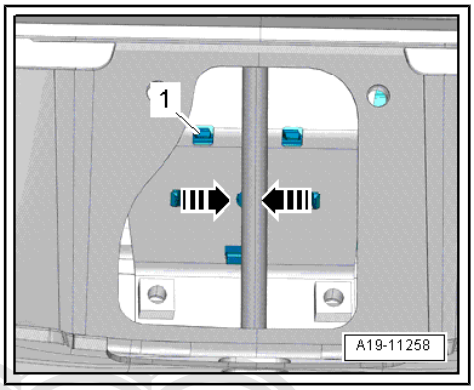

Protected by copyright. Copying for private or commercial purposes, in part or in whole, is not permitted unless authorised by AUDI AG. AUDI AG does not guarantee or accept any liability with respect to the correctness of information in this document. Copyright by AUDI AG.

– Release hose clips -1, 2, 3- and disconnect coolant hoses.

– Unscrew bolts -arrows-, pull thermostat housing towards front and remove.

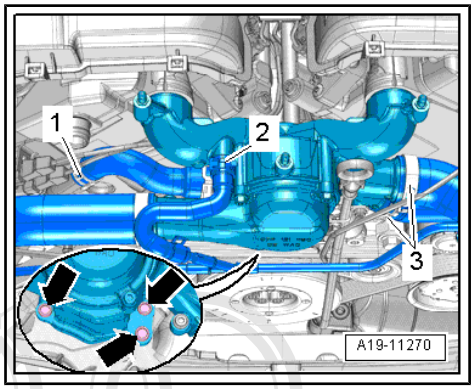

Installing

Installation is carried out in the reverse order; note the following:

Note

- *Renew connecting pipes and seal.*
- *Secure all hose connections with the correct type of hose clips (same as original equipment) ⇒ Electronic parts catalogue .*

– Install air cleaner housing (right-side) ⇒ page 245 .

– Connect coolant hose with plug-in connector ⇒ page 221 .

– Install engine cover panel ⇒ page 62 .

Note

Do not reuse coolant.

Protected by copyright. Copying for private or commercial purposes, in part or in whole, is not permitted unless authorised by AUDI AG. AUDI AG does not guarantee or accept any liability with respect to the correctness of information in this document. Copyright by AUDI AG.

– Fill up with coolant ⇒ page 190 .

Tightening torques

- ⇒ “2.2 Exploded view - thermostat”, page 197
- ⇒ “3.1 Exploded view - oil pressure switches/crankcase breather system”, page 179

2.6 Checking thermostat

– Heat removed thermostat in water bath.

Starts to open	Fully open	Opening travel
approx. 97 ± 3 °C	112 °C [1]	at least 8 mm at 112 °C
• [1] Cannot be tested.		

2.7 Removing and installing coolant temperature sender - G62-

Removing

- Engine cold.

– Open filler cap -arrow- on coolant expansion tank briefly to relieve residual pressure in cooling system.

– Remove air cleaner housing (right-side) ⇒ page 245 .

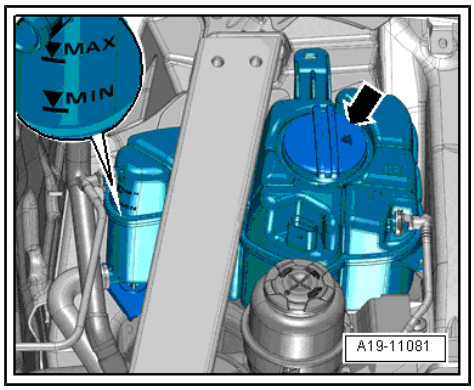

– Unplug electrical connector -1-.

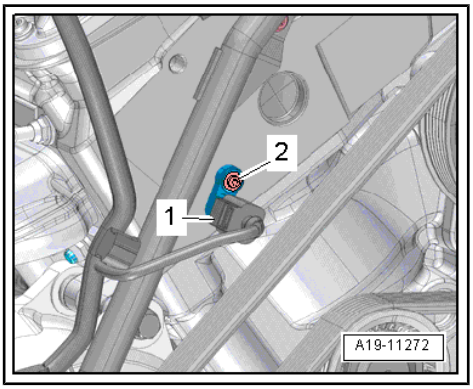

Note

Place a cloth underneath to catch escaping coolant and engine oil.

– Unscrew bolt -2- and pull off coolant temperature sender - G62- .

Installing

Installation is carried out in the reverse order; note the following:

Note

- *Renew O-ring and support ring.*
- *Insert new coolant temperature sender - G62- immediately into connection to avoid loss of coolant.*

– Install air cleaner housing (right-side) ⇒ page 245 .

– Check coolant level ⇒ page 195 .

Tightening torques

- ⇒ “3.1 Exploded view - coolant pipes”, page 206

Protected by copyright. Copying for private or commercial purposes, in part or in whole, is not permitted unless authorised by AUDI AG. AUDI AG does not guarantee or accept any liability with respect to the correctness of information in this document. Copyright by AUDI AG.

3 Coolant pipes

⇒ “3.1 Exploded view - coolant pipes”, page 206

⇒ “3.2 Removing and installing coolant pipes”, page 207

3.1 Exploded view - coolant pipes

Note

The arrow markings on coolant pipes and on ends of hoses must align.

Protected by copyright. Copying for private or commercial purposes, in part or in whole, is not permitted unless authorised by AUDI AG. AUDI AG does not guarantee or accept any liability with respect to the correctness of information in this document. Copyright by AUDI AG.

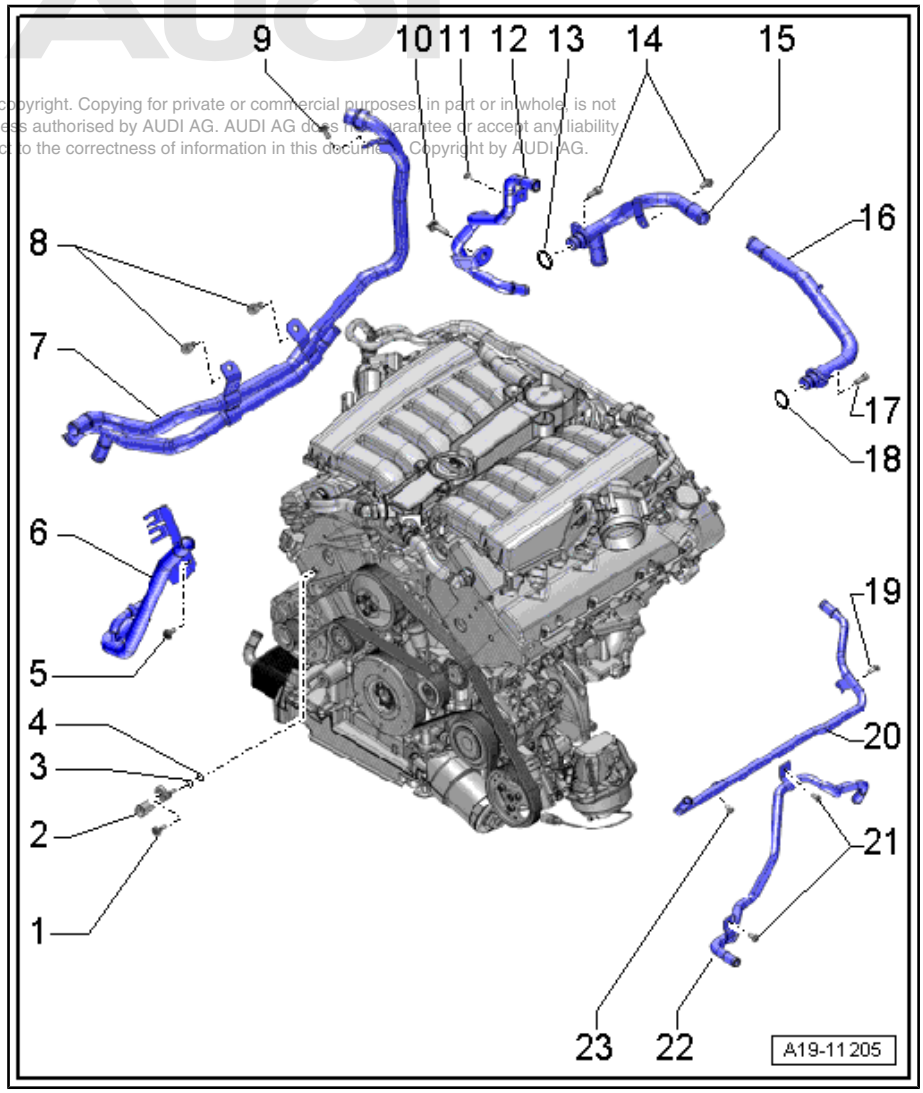

1 - Bolt
- ❑ Renew
- ❑ 4 Nm + turn 45° further

2 - Coolant temperature sender - G62-
- ❑ Removing and installing ⇒ page 204

3 - O-ring
- ❑ Renew

4 - Support ring
- ❑ Renew

5 - Bolt
- ❑ 9 Nm

6 - Coolant pipe (front right)
- ❑ Removing and installing ⇒ page 207

7 - Coolant pipes (right-side)
- ❑ Removing and installing ⇒ page 209

8 - Bolts
- ❑ 20 Nm

9 - Bolt
- ❑ 9 Nm

10 - Bolt
- ❑ 23 Nm

11 - Bolt
- ❑ 9 Nm

12 - Coolant pipe (right-side) on gearbox
- ❑ Removing and installing ⇒ page 217

13 - O-ring
- ❑ Renew

14 - Bolts
- ❑ 9 Nm

15 - Coolant pipe (rear right)
- ❑ Removing and installing ⇒ page 210

16 - Coolant pipe (rear left)

- ❑ Removing and installing ⇒ page 216

17 - Bolt

- ❑ 9 Nm

18 - O-ring

- ❑ Renew

19 - Bolt

- ❑ 9 Nm

20 - Coolant pipe (top left)

- ❑ Removing and installing ⇒ page 212

21 - Bolts

- ❑ 9 Nm

22 - Coolant pipe (bottom left)

- ❑ Removing and installing ⇒ page 214

23 - Bolt

- ❑ 9 Nm

Protected by copyright. Copying for private or commercial purposes, in part or in whole, is not permitted unless authorised by AUDI AG. AUDI AG does not guarantee or accept any liability with respect to the correctness of information in this document. Copyright by AUDI AG.

3.2 Removing and installing coolant pipes

⇒ "3.2.1 Removing and installing coolant pipe (front right)", page 207

⇒ "3.2.2 Removing and installing coolant pipes (right-side)", page 209

⇒ "3.2.3 Removing and installing coolant pipe (rear right)", page 210

⇒ "3.2.4 Removing and installing coolant pipe (top left)", page 212

⇒ "3.2.5 Removing and installing coolant pipe (bottom left)", page 214

⇒ "3.2.6 Removing and installing coolant pipe (rear left)", page 216

⇒ "3.2.7 Removing and installing coolant pipe (right-side) on gearbox", page 217

3.2.1 Removing and installing coolant pipe (front right)

Special tools and workshop equipment required

- ♦ Hose clip pliers - VAS 6362-

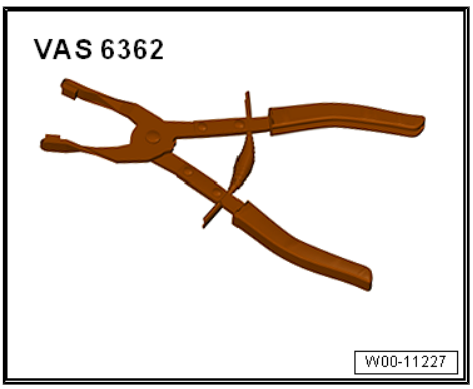

Removing

– Remove engine cover panel ⇒ page 62 .

– Drain coolant ⇒ page 188 .

– Remove air cleaner housing (right-side) ⇒ page 245 .

– Lift retaining clip -1- and disconnect coolant hose (top right) from radiator.

– Press coolant hose to the side.

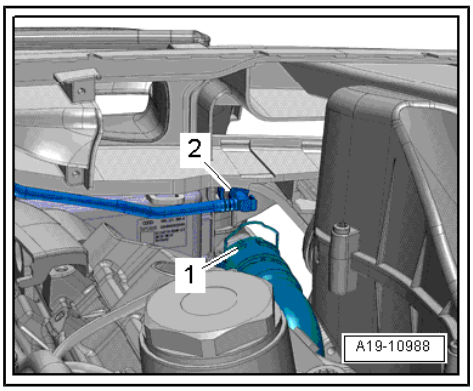

Note

Disregard -item 2-.

– Unplug electrical connector -1- and move wiring harness clear at coolant pipe (front right).

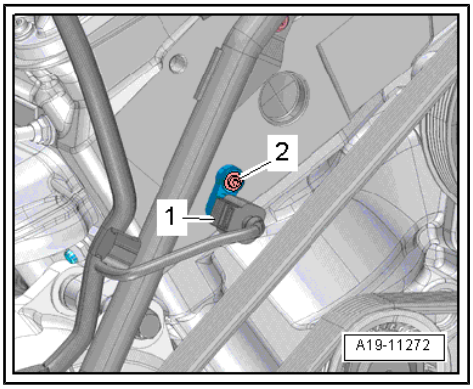

Note

Disregard -item 2-.

Protected by copyright. Copying for private or commercial purposes, in part or in whole, is not permitted unless authorised by AUDI AG. AUDI AG does not guarantee or accept any liability with respect to the correctness of information in this document. Copyright by AUDI AG.

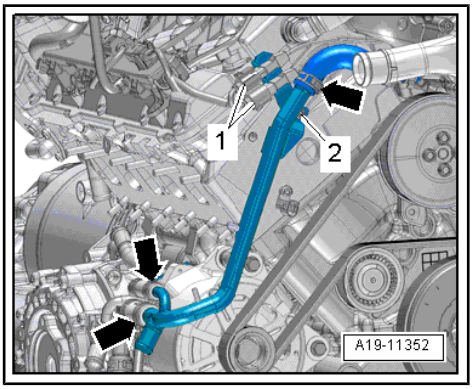

– Detach electrical connectors -1- from bracket.
– Remove bolt -2-.
– Release hose clips -arrows- and detach coolant hoses.
– Detach coolant pipe (front right).

Installing

Installation is carried out in the reverse order; note the following:

Note

Secure all hose connections with the correct type of hose clips (same as original equipment) ⇒ Electronic parts catalogue .

– Install air cleaner housing ⇒ page 245 .
– Connect coolant hose with plug-in connector ⇒ page 221 .
– Install engine cover panel ⇒ page 62 .

Note

Do not reuse coolant.

– Fill up with coolant ⇒ page 190 .

Tightening torques

♦ ⇒ “3.1 Exploded view - coolant pipes”, page 206

3.2.2 Removing and installing coolant pipes (right-side)

Special tools and workshop equipment required

♦ Hose clip pliers - VAS 6362-

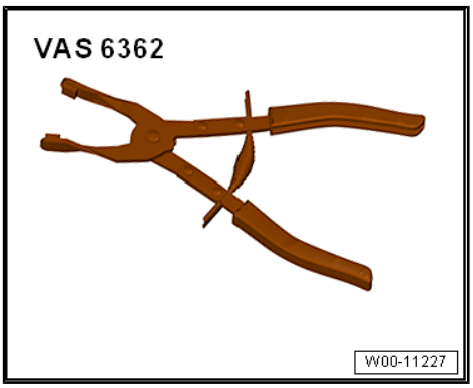

Protected by copyright. Copying for private or commercial purposes, in part or in whole, is not permitted unless authorised by AUDI AG. AUDI AG does not guarantee or accept any liability with respect to the correctness of information in this document. Copyright by AUDI AG.

Removing

- Gearbox removed ⇒ Rep. gr. 37 ; Removing and installing gearbox; Removing gearbox .

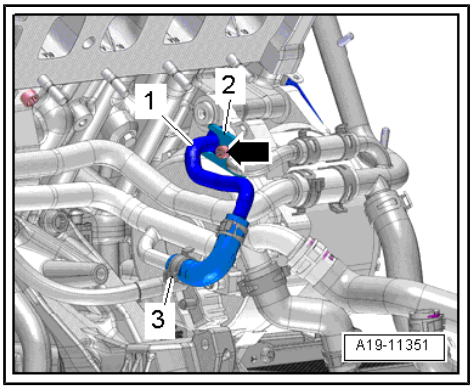

Note

Fit all heat insulation sleeves in the original position when installing.

– Remove exhaust manifolds with catalytic converters (right-side) ⇒ page 310 .

– Release hose clip -3- and detach coolant hose.

– Unscrew bolt -arrow- and remove coolant pipe -1- with bracket -2-.

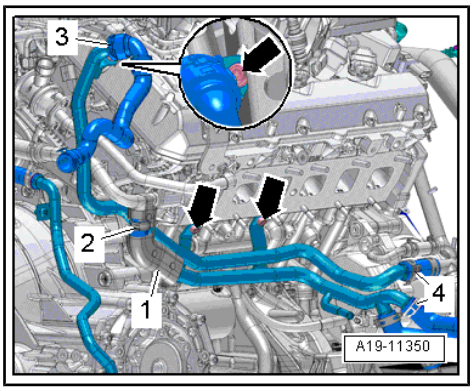

– Detach heat shield sleeve -1-.

– Remove bolts -arrows-.

– Release hose clips -2 and 4-, lift retaining clip -3- and detach coolant hoses.

– Detach coolant pipes.

Installing

Installation is carried out in the reverse order; note the following:

Note

♦ *Fit new O-ring.*

♦ *Secure all hose connections with the correct type of hose clips (same as original equipment) ⇒ Electronic parts catalogue .*

– Install alternator ⇒ Electrical system; Rep. gr. 27 ; Alternator; Removing and installing alternator .

– Install exhaust manifold with catalytic converters (right-side) ⇒ page 310 .

– Connect coolant hose with plug-in connector ⇒ page 221 .

Tightening torques

♦ ⇒ “3.1 Exploded view - coolant pipes”, page 206

3.2.3 Removing and installing coolant pipe (rear right)

Special tools and workshop equipment required

Protected by copyright. Copying for private or commercial purposes, in part or in whole, is not permitted unless authorised by AUDI AG. AUDI AG does not guarantee or accept any liability with respect to the correctness of information in this document. Copyright by AUDI AG.

♦ Hose clip pliers - VAS 6362-

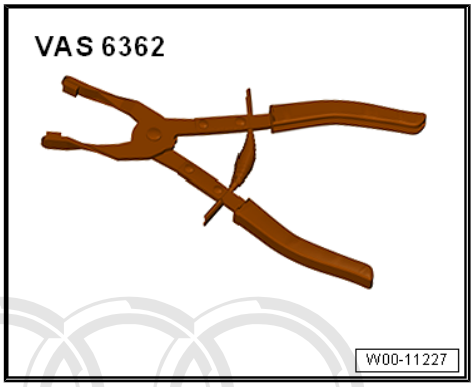

Removing

- Gearbox removed ⇒ Rep. gr. 37 ; Removing and installing gearbox; Removing gearbox .

Note

Fit all heat insulation sleeves in the original position when installing.

Protected by copyright. Copying for private or commercial purposes, in part or in whole, is not permitted unless authorised by AUDI AG. AUDI AG does not guarantee or accept any liability with respect to the correctness of information in this document. Copyright by AUDI AG.

– Remove exhaust manifolds with catalytic converters (right-side) ⇒ page 310 .

– Detach heat shield sleeve -1-.

– Remove bolts -arrows-.

– Release hose clip -2- and detach coolant hose.

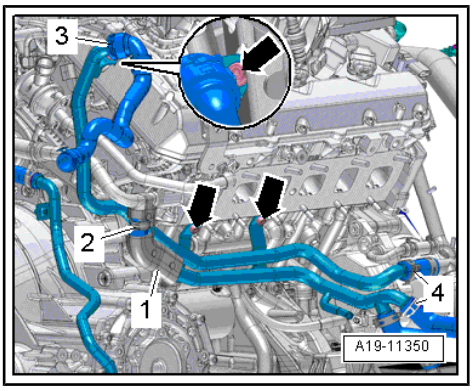

Note

Disregard -items 3, 4-.

– Release hose clip -1- and detach coolant hose.
– Remove bolts -2 and 3-.
– Detach coolant pipe (rear right) from cylinder head.

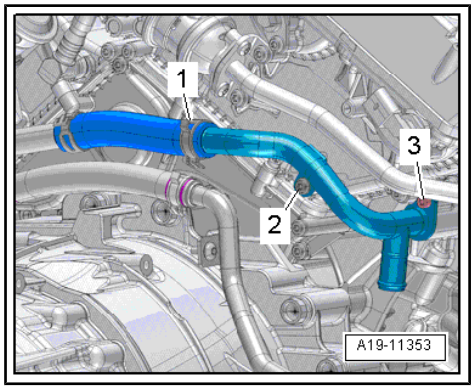

Installing

Installation is carried out in the reverse order; note the following:

Note

- *Fit new O-ring.*
- *Secure all hose connections with the correct type of hose clips (same as original equipment) ⇒ Electronic parts catalogue .*

– Clean and smoothen sealing surface for O-ring.
– Lubricate O-ring with coolant and slide onto coolant pipe.
– Install exhaust manifold with catalytic converters (right-side) ⇒ page 310 .

Tightening torques

- ⇒ “3.1 Exploded view - coolant pipes”, page 206

3.2.4 Removing and installing coolant pipe (top left)

Special tools and workshop equipment required

- Hose clamps, up to 25 mm - 3094-

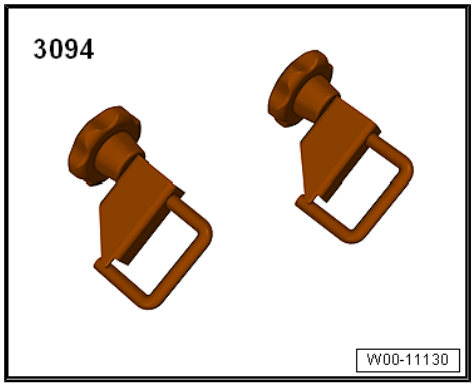

- Hose clip pliers - VAS 6362-

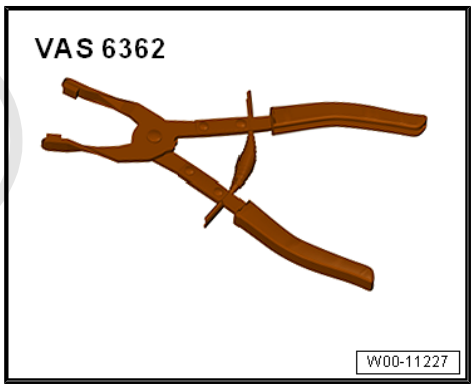

Removing

– Remove poly V-belt ⇒ page 66 .

Protected by copyright. Copying for private or commercial purposes, in part or in whole, is not permitted unless authorised by AUDI AG. AUDI AG does not guarantee or accept any liability with respect to the correctness of information in this document. Copyright by AUDI AG.

Vehicles up to model year 2013:

– Remove power steering pump ⇒ Running gear, axles, steering; Rep. gr. 48 ; Hydraulic power steering; Removing and installing power steering pump

– Remove bracket for power steering pump ⇒ page 70 .

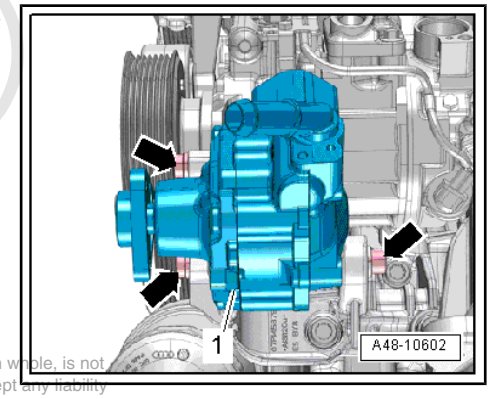

Protected by copyright. Copying for private or commercial purposes, in part or in whole, is not permitted unless authorised by AUDI AG. AUDI AG does not guarantee or accept any liability with respect to the correctness of information in this document. Copyright by AUDI AG.

All vehicles (continued):

– Detach electrical connector -1- from bracket and unplug.

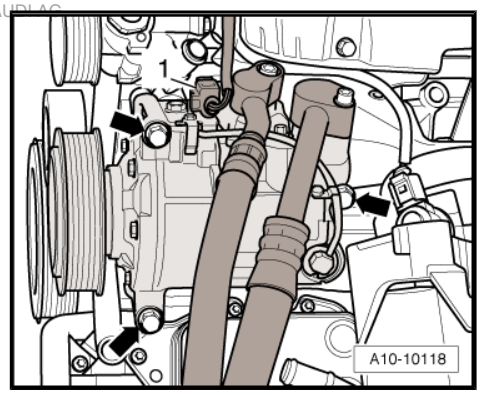

> ⚠ **Caution**
>
> *Danger of damage to refrigerant lines and hoses.*
>
> ♦ *Do NOT stretch, kink or bend refrigerant lines and hoses.*

– Remove bolts -arrows-, detach air conditioner compressor from bracket and tie up to left side.

– Remove secondary air pump motor -V101- / -V189- ⇒ page 296 .

– Remove bolt -1- for coolant pipe on gearbox (rear right).

– Remove bolts -arrows- on both sides and detach brackets for secondary air pumps.

– Remove exhaust manifold (rear left) with catalytic converter ⇒ page 303 .

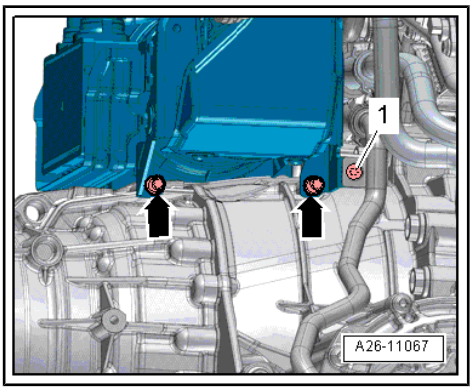

– Clamp off coolant hoses using hose clamps, up to 25 mm - 3094- , release hose clips -1 and 2- and disconnect hoses.

– Remove bolts -arrows- and detach coolant pipe (top left).

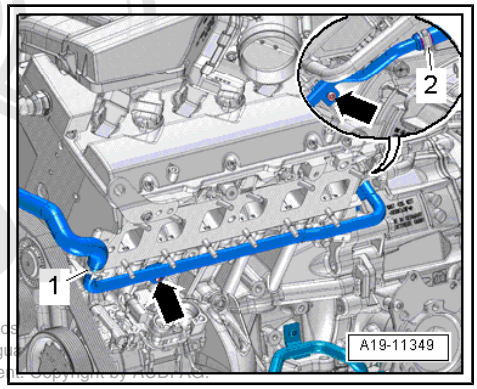

Installing

Installation is carried out in the reverse order; note the following:

Note

Secure all hose connections with the correct type of hose clips (same as original equipment) ⇒ Electronic parts catalogue .

Copyright by AUDI AG. For internal use only. For commercial purposes, distribution, transmission and reproduction of this document not permitted. Audi AG does not guarantee with respect to the correctness of information in this document. Copyright by AUDI AG.

– Install exhaust manifold (rear left) with catalytic converter ⇒ page 303 .

– Install secondary air pumps ⇒ page 296 .

– Install air conditioner compressor ⇒ Heating, air conditioning; Rep. gr. 87 ; Air conditioner compressor; Detaching and attaching air conditioner compressor at bracket .

Vehicles up to model year 2013:

– Install bracket for power steering pump ⇒ page 70 .

– Install power steering pump ⇒ Running gear, axles, steering; Rep. gr. 48 ; Hydraulic power steering; Removing and installing power steering pump .

All vehicles (continued):

– Install poly V-belt ⇒ page 66 .

– Check coolant level ⇒ page 195 .

Tightening torques

♦ ⇒ “3.1 Exploded view - coolant pipes”, page 206

3.2.5 Removing and installing coolant pipe (bottom left)

Removing

Special tools and workshop equipment required

♦ Hose clamps, up to 25 mm - 3094-

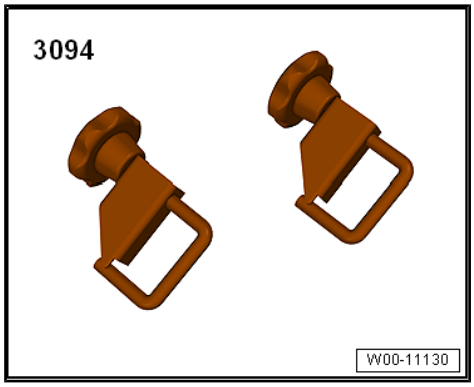

♦ Hose clip pliers - VAS 6362-

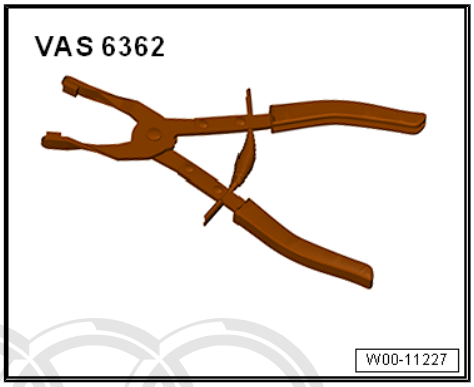

Removing

– Remove front wheel housing liner (left-side) completely ⇒ General body repairs, exterior; Rep. gr. 66 ; Wheel housing liner; Removing and installing front wheel housing liner .

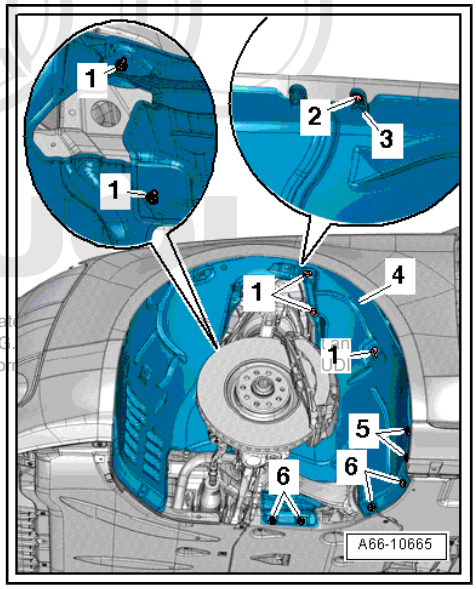

Protected by copyright. Copying for privat
permitted unless authorised by AUDI AG.
with respect to the correctness of infor

– Remove noise insulation panels -1- and -2- ⇒ General body repairs, exterior; Rep. gr. 66 ; Noise insulation; Removing and installing noise insulation .

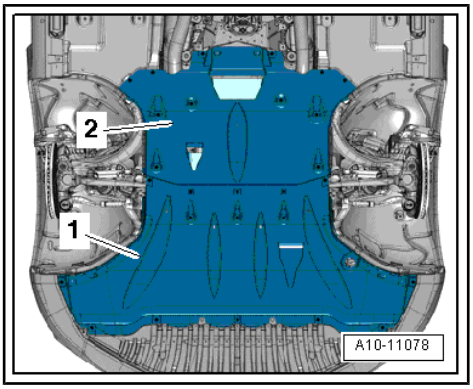

– Remove bolts -arrows- and detach heat shield for drive shaft (left-side).

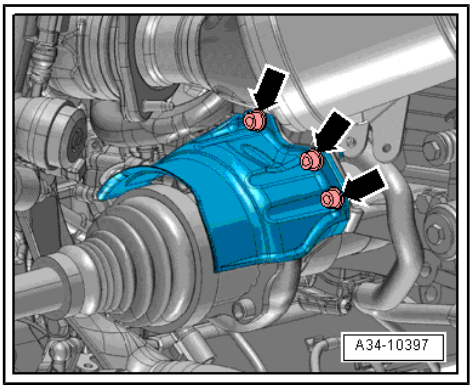

Note

Place a cloth underneath to catch escaping coolant.

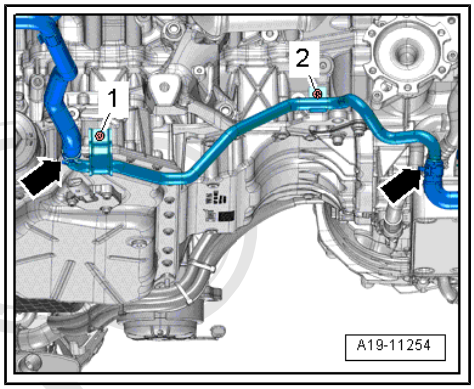

– Clamp off coolant hoses using hose clamps up to 25 mm - 3094- , release hose clips -arrows- and disconnect hoses.

– Remove bolts -1 and 2- and detach coolant pipe (bottom left).

Installing

Installation is carried out in the reverse order; note the following:

Note

Secure all hose connections with the correct type of hose clips (same as original equipment) ⇒ Electronic parts catalogue .

Protected by copyright. Copying for private or commercial purposes, in part or in whole, is not permitted unless authorised by AUDI AG. AUDI AG does not guarantee or accept any liability with respect to the correctness of information in this document. Copyright by AUDI AG.

– Check coolant level ⇒ page 195 .

Tightening torques

- ⇒ “3.1 Exploded view - coolant pipes”, page 206
- Heat shield for drive shaft ⇒ Running gear, axles, steering; Rep. gr. 40 ; Drive shaft; Exploded view - drive shaft
- ⇒ General body repairs, exterior; Rep. gr. 66 ; Noise insulation; Exploded view - noise insulation
- ⇒ General body repairs, exterior; Rep. gr. 66 ; Wheel housing liner; Exploded view - wheel housing liner (front)

3.2.6 Removing and installing coolant pipe (rear left)

Special tools and workshop equipment required

- Hose clip pliers - VAS 6362-

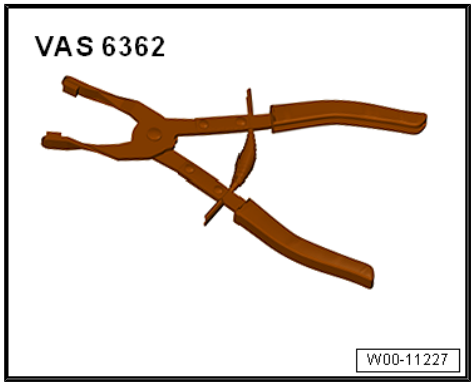

Removing

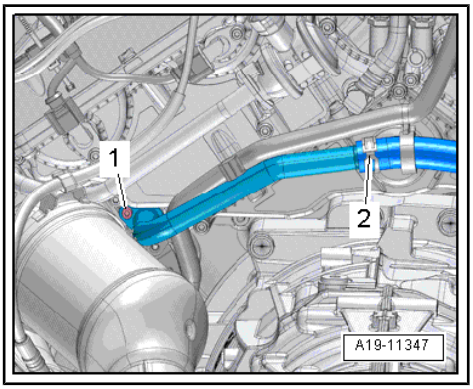

– Drain coolant ⇒ page 188 .
– Remove secondary air pump motor -V101- / -V189- ⇒ page 296 .
– Remove bolt -1- and detach coolant pipe (rear left) from cylinder head.
– Release hose clip -2- and detach coolant hose.

Installing

Installation is carried out in the reverse order; note the following:

Note

Protected by copyright. Copying for private or commercial purposes, in part or in whole, is not permitted unless authorised by AUDI AG. AUDI AG does not guarantee or accept any liability with respect to the correctness of information in this document. Copyright by AUDI AG.

- *Fit new O-ring.*
- *Secure all hose connections with the correct type of hose clips (same as original equipment) ⇒ Electronic parts catalogue .*

– Clean and smoothen sealing surface for O-ring.
– Lubricate O-ring with coolant and slide onto coolant pipe.
– Install secondary air pumps ⇒ page 296 .

Note

Do not reuse coolant.

– Fill up with coolant ⇒ page 190 .

Tightening torques

- ⇒ “3.1 Exploded view - coolant pipes”, page 206

3.2.7 Removing and installing coolant pipe (right-side) on gearbox

Special tools and workshop equipment required

- Hose clamps, up to 25 mm - 3094-

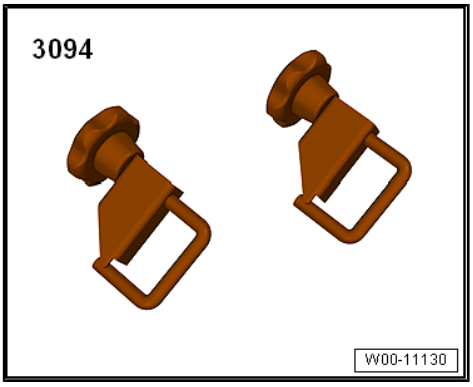

♦ Hose clip pliers - VAS 6362-

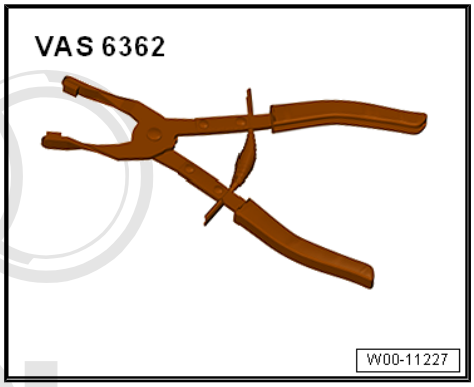

Protected by copyright. Copying for private or commercial purposes, in part or in whole, is not permitted unless authorised by AUDI AG. AUDI AG does not guarantee or assume liability with respect to the correctness of information in this document.

Removing

– Remove secondary air pump motor -V101- / -V189- ⇒ page 296 .

– Remove front wheel housing liner (right-side) completely ⇒ General body repairs, exterior; Rep. gr. 66 ; Wheel housing liner; Removing and installing front wheel housing liner .

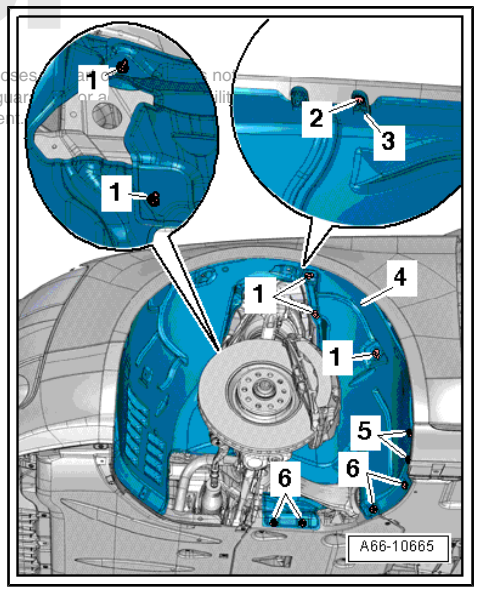

– Remove rear noise insulation -2- ⇒ General body repairs, exterior; Rep. gr. 66 ; Noise insulation; Removing and installing noise insulation .

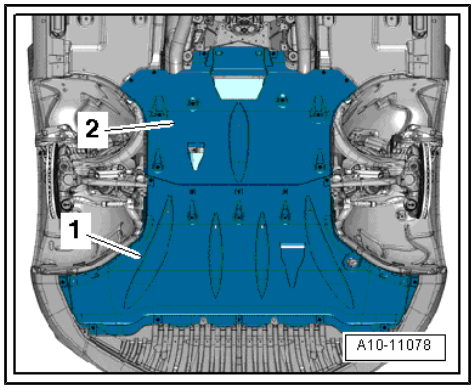

– Remove bolts -1 and 2-.

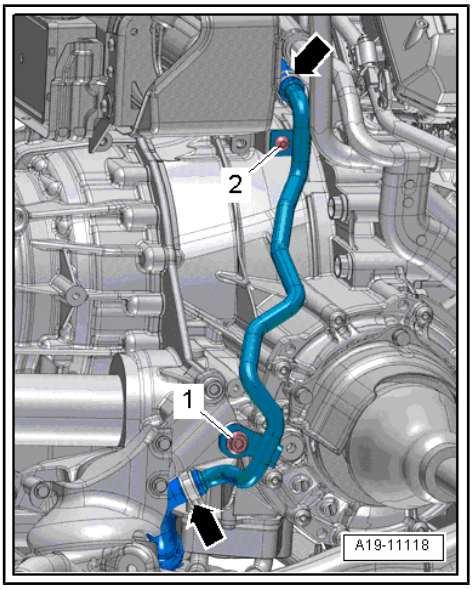

Note

Place a cloth underneath to catch escaping coolant and engine oil.

– Clamp off coolant hoses using hose clamps up to 25 mm - 3094- , release hose clips -arrows- and disconnect hoses.

– Detach coolant pipe (right-side) from gearbox.

Installing

Installation is carried out in the reverse order; note the following:

Note

Secure all hose connections with the correct type of hose clips (same as original equipment) ⇒ Electronic parts catalogue .

– Install secondary air pumps ⇒ page 296 .

– Check coolant level ⇒ page 195 .

Tightening torques

- ⇒ “3.1 Exploded view - coolant pipes”, page 206
- ⇒ General body repairs, exterior; Rep. gr. 66 ; Noise insulation; Exploded view - noise insulation
- ⇒ General body repairs, exterior; Rep. gr. 66 ; Wheel housing liner; Exploded view - wheel housing liner (front)

Protected by copyright. Copying for private or commercial purposes, in part or in whole, is not permitted unless authorised by AUDI AG. AUDI AG does not guarantee or accept any liability with respect to the correctness of information in this document. Copyright by AUDI AG.

4 Radiators/radiator fans

⇒ “4.1 Exploded view - radiator/radiator fans”, page 220
⇒ “4.2 Exploded view - auxiliary radiator”, page 223
⇒ “4.3 Removing and installing radiator”, page 223
⇒ “4.4 Removing and installing radiator fans”, page 228
⇒ “4.5 Removing and installing auxiliary radiator”, page 229

4.1 Exploded view - radiator/radiator fans

Radiator

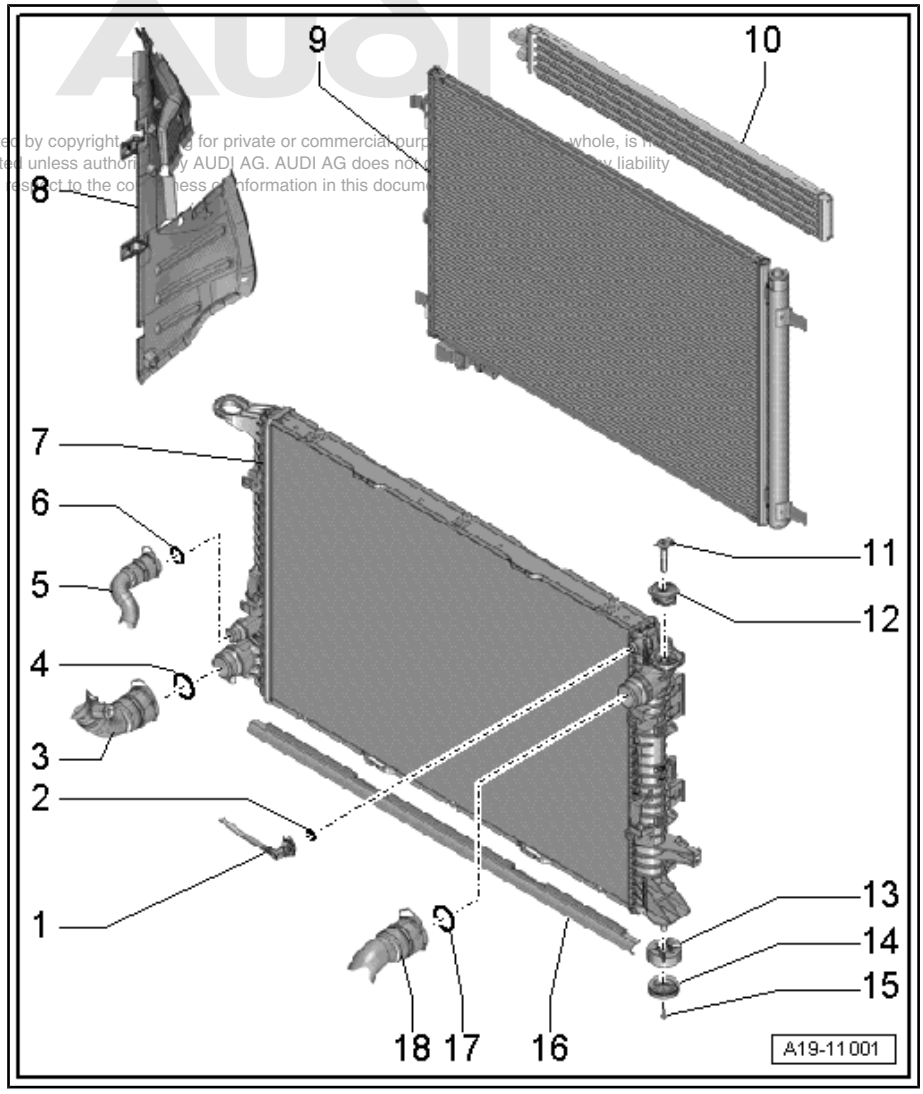

Protected by copyright. Copying for private or commercial purposes, in part or in whole, is not permitted unless authorized by AUDI AG. AUDI AG does not guarantee or assume any liability with respect to the correctness of information in this document.

1 - Coolant pipe
- ❑ To coolant expansion tank
- ❑ Lift retaining clip to detach
- ❑ Connecting ⇒ page 221

2 - O-ring
- ❑ Renew

3 - Coolant hose
- ❑ Lift retaining clip to detach
- ❑ Connecting ⇒ page 221

4 - O-ring
- ❑ Renew

5 - Coolant hose
- ❑ Lift retaining clip to detach
- ❑ Connecting ⇒ page 221

6 - O-ring
- ❑ Renew

7 - Radiator
- ❑ Removing and installing ⇒ page 223
- ❑ If renewed, refill system with fresh coolant

8 - Air duct

9 - Condenser
- ❑ Removing and installing ⇒ Heating, air conditioning; Rep. gr. 87 ; Refrigerant circuit; Removing and installing condenser

10 - Hydraulic fluid cooler
- ❑ For vehicles up to model year 2013
- ❑ Different versions available ⇒ Electronic parts catalogue
- ❑ Illustration shows version for vehicles with dynamic steering
- ❑ Removing and installing ⇒ Running gear, axles, steering; Rep. gr. 48 ; Hydraulic power steering; Removing and installing hydraulic fluid cooler

11 - Retaining pin

- ❑ Use screwdriver to release and pull off

12 - Rubber buffer

13 - Rubber bush

- ❑ For radiator

14 - Washer

15 - Bolt

- ❑ 3.5 Nm

16 - Air duct

17 - O-ring

- ❑ Renew

Protected by copyright. Copying for private or commercial purposes, in part or in whole, is not permitted unless authorised by AUDI AG. AUDI AG does not guarantee or accept any liability with respect to the correctness of information in this document. Copyright by AUDI AG.

18 - Coolant hose

- ❑ Lift retaining clip to detach
- ❑ Connecting ⇒ page 221

Connecting coolant hose with plug-in connector

– Remove old O-ring -2- from coolant hose -3-.

– Lightly lubricate new O-ring with coolant and fit O-ring in coolant hose.

– Press coolant hose onto connection -1- until it engages audibly.

– Press coolant hose in again and then pull to check that plug-in connector is correctly engaged.

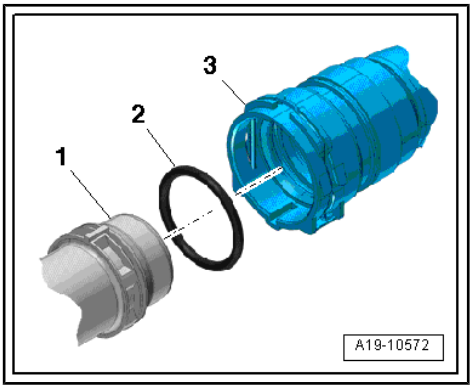

Radiator cowl and radiator fans

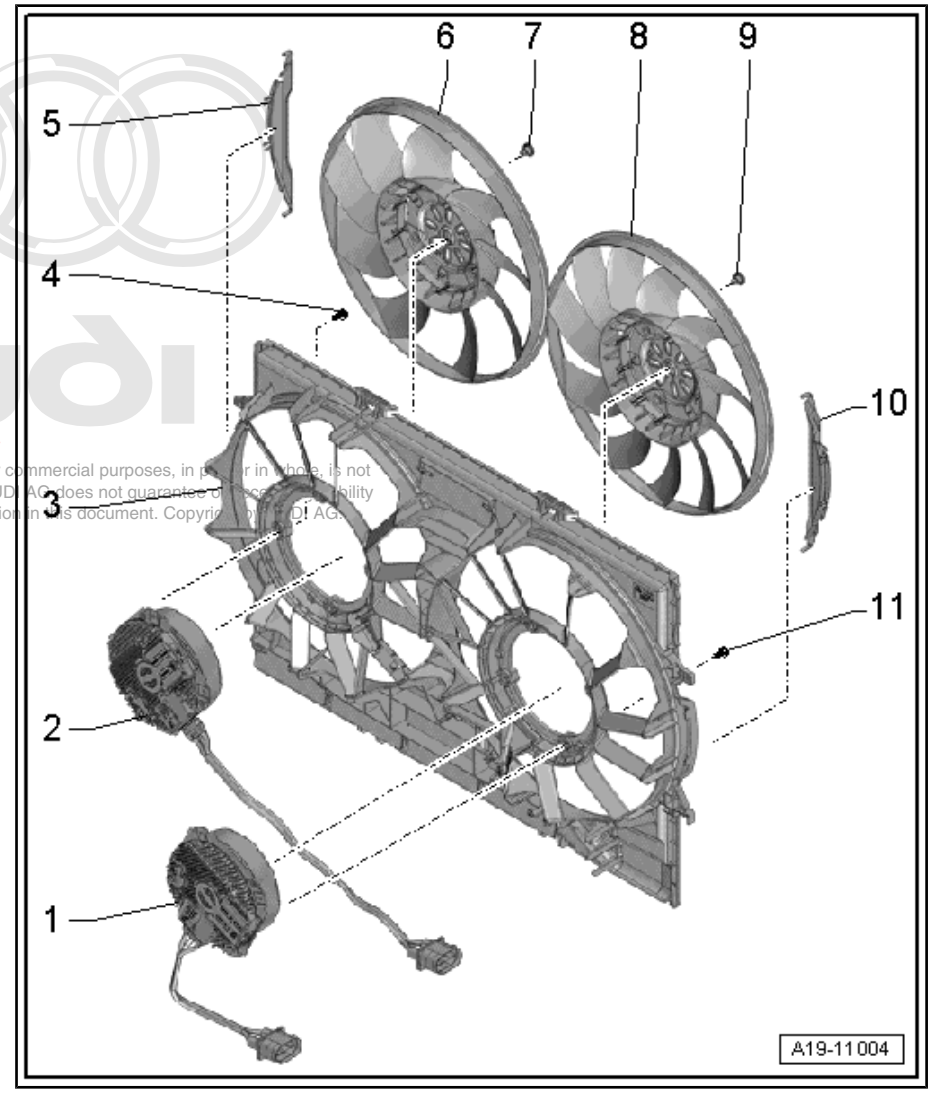

1 - Radiator fan 2 - V177-

- ❑ With radiator fan control unit 2 - J671-
- ❑ Removing and installing ⇒ page 228

2 - Radiator fan - V7-

- ❑ With radiator fan control unit - J293-
- ❑ Removing and installing ⇒ page 228

3 - Radiator cowl

- ❑ Removing and installing ⇒ “4.3 Removing and installing radiator”, page 223

Protected by copyright. Copying for private or commercial purposes, in part or in whole, is not permitted unless authorised by AUDI AG. AUDI AG does not guarantee or assume liability with respect to the correctness of information in this document. Copyright by AUDI AG.

4 - Bolt

- ❑ 3.5 Nm

5 - Air duct (left-side)

6 - Fan wheel

- ❑ Pin must engage in hole

7 - Bolt

- ❑ 5 Nm

8 - Fan wheel

- ❑ Pin must engage in hole

9 - Bolt

- ❑ 5 Nm

10 - Air duct (right-side)

11 - Bolt

- ❑ 3.5 Nm

4.2 Exploded view - auxiliary radiator

Note

The illustration shows the auxiliary radiator (left-side); it is similar on the right-side.

1 - Air duct

2 - Auxiliary radiator
- ❑ Removing and installing ⇒ page 229

3 - Coolant hoses

4 - Bolt
- ❑ 9 Nm

5 - Bracket
- ❑ For auxiliary radiator

6 - Grommet

7 - Bolt
- ❑ 9 Nm

8 - Grommet

9 - Coolant hose

10 - Continued coolant circulation pump - V51-
- ❑ Removing and installing ⇒ page 197

11 - Coolant hose

12 - Bolt
- ❑ 9 Nm

13 - Grommet

14 - Bolt
- ❑ With washer
- ❑ 9 Nm

15 - Air duct

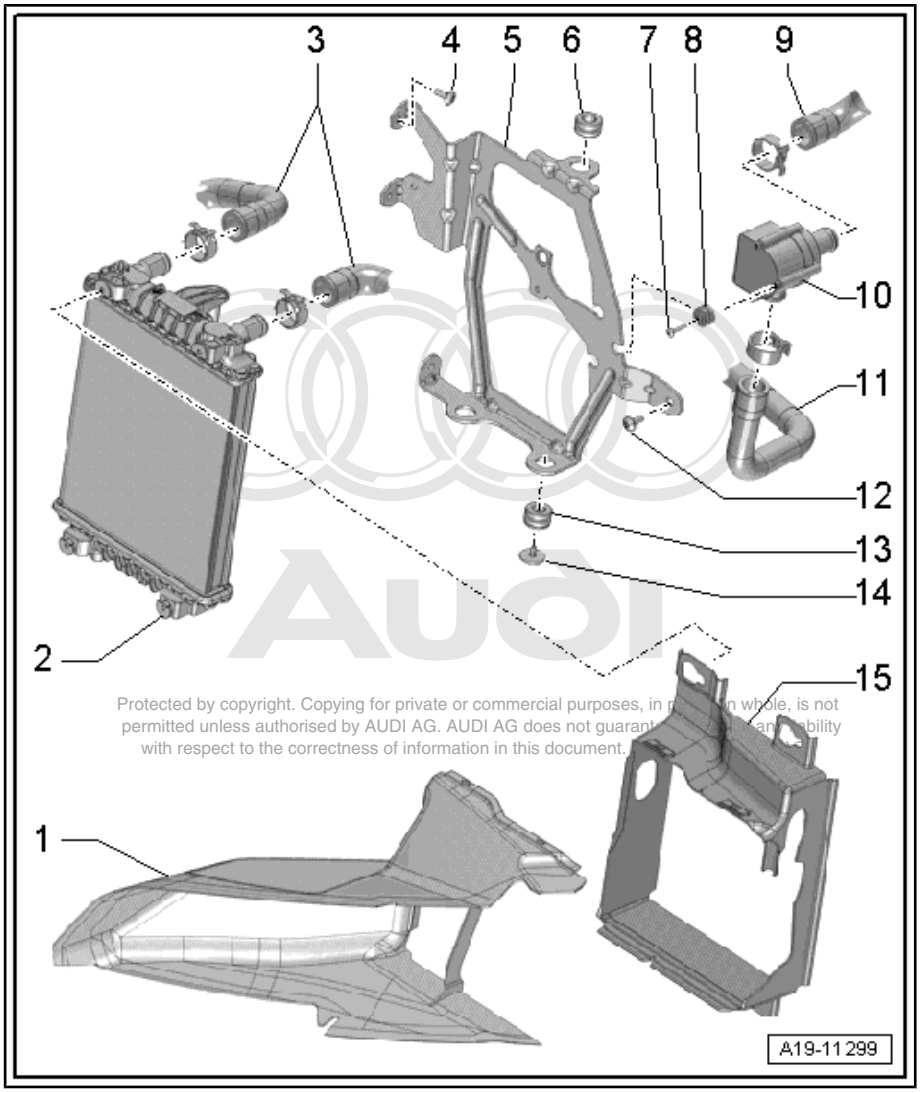

Protected by copyright. Copying for private or commercial purposes, in part or in whole, is not permitted unless authorised by AUDI AG. AUDI AG does not guarantee or assume any liability with respect to the correctness of information in this document.

4.3 Removing and installing radiator

Note

Radiator can only be removed and installed together with radiator cowl.

Removing

– Drain coolant ⇒ page 188 .

– Remove impact bar -1- ⇒ General body repairs, exterior; Rep. gr. 63 ; Bumper (front); Removing and installing impact bar .

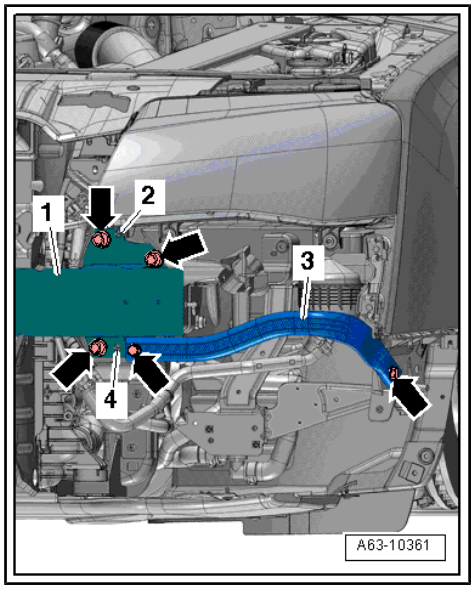

– Lift retaining clips -1 and 2- and disconnect coolant hoses from radiator.

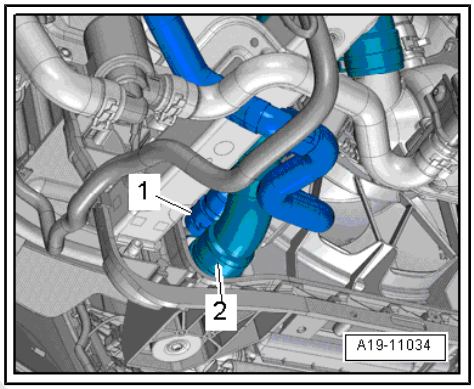

> ⚠ **WARNING**
>
> *Risk of injury as the radiator fans may start up automatically.*
>
> ♦ *Unplug electrical connectors before starting to work in the area of radiator cowl.*

– Unplug electrical connectors -1, 2- for radiator fan.

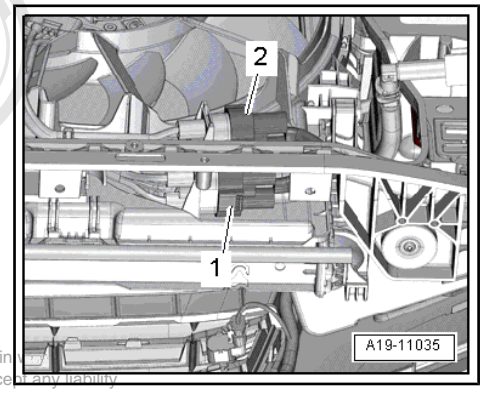

Protected by copyright. Copying for private or commercial purposes, in part or in
permitted unless authorised by AUDI AG. AUDI AG does not guarantee or accept any liability
with respect to the correctness of information in this document. Copyright by AUDI AG.

– Lift retaining clips -1 and 2- and disconnect coolant hose and coolant pipe (top right) from radiator.

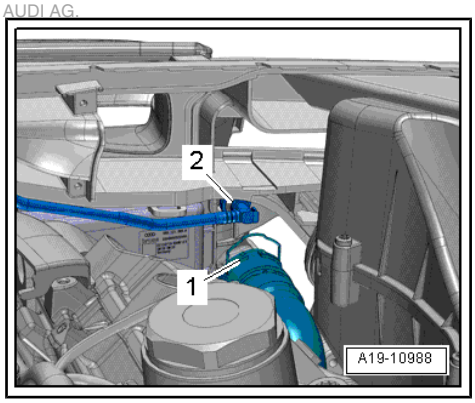

– Detach hose -4- for headlight washer system (remove clip -3-).

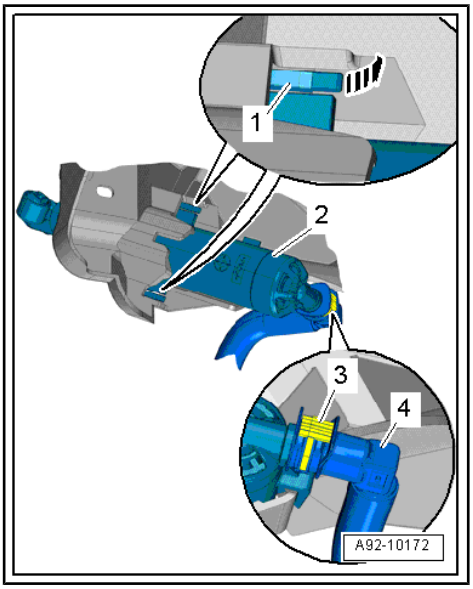

Note

Disregard -items 1, 2- and -arrow-.

– Remove bolt -arrow-, leave bracket with horns suspended.

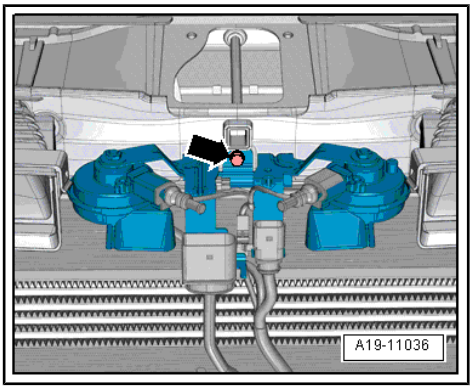

– Unclip cover -1- on both sides -arrows- and remove.

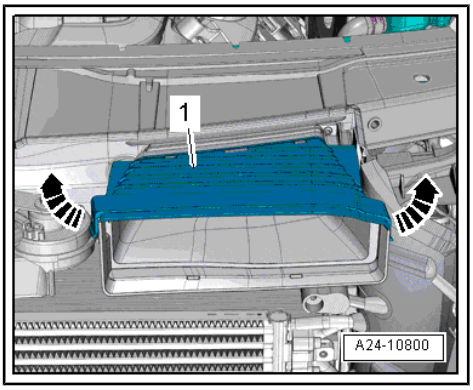

Protected by copyright. Copying for private or commercial purposes, in part or in whole, is not permitted unless authorised by AUDI AG. AUDI AG does not guarantee or accept any liability with respect to the correctness of information in this document. Copyright by AUDI AG.

– Remove bolts -arrows- on both sides, detach air duct -1- and -2- and remove.

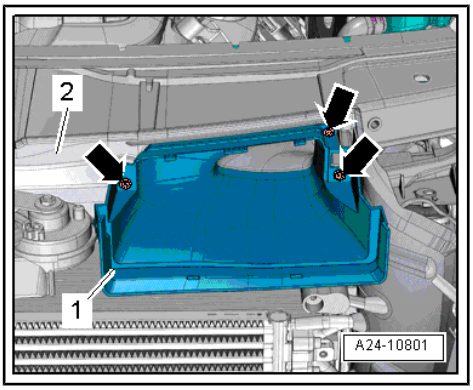

– Unclip air ducts -1 and 2-.

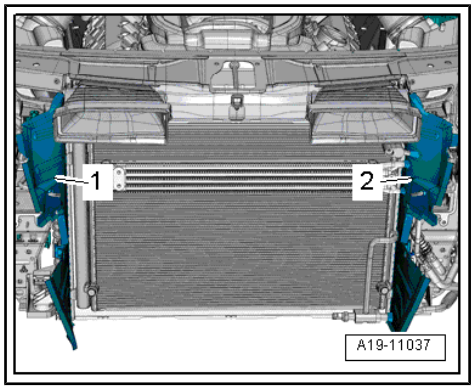

Vehicles up to model year 2013:

– Vehicles without dynamic steering: Remove bolts -arrows-, detach hydraulic fluid cooler for power steering to left side and tie it up to side.

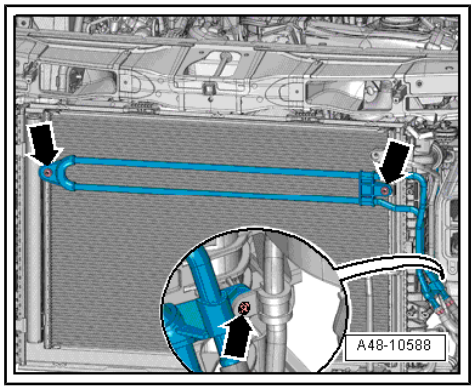

– Vehicles with dynamic steering: Remove bolts -arrows-, detach hydraulic fluid cooler -1- for power steering to left side and hook it up to side.

Protected by copyright. Copying for private or commercial purposes, in part or in whole, is not permitted unless authorised by AUDI AG. AUDI AG does not guarantee or accept any liability with respect to the correctness of information in this document. Copyright by AUDI AG.

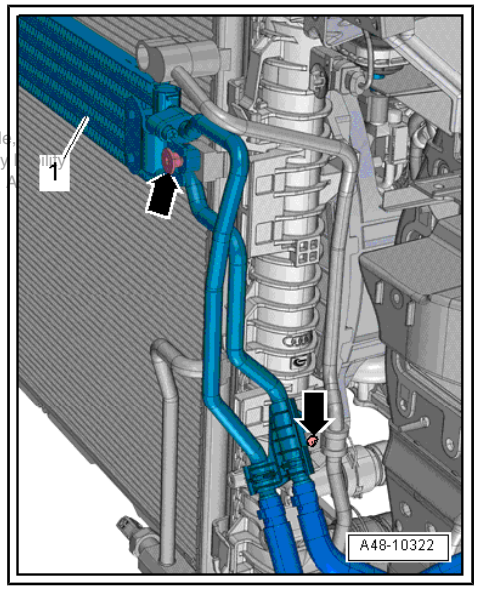

All vehicles (continued):

– Remove bolts -arrows- on both sides and detach support -1- from lock carrier.

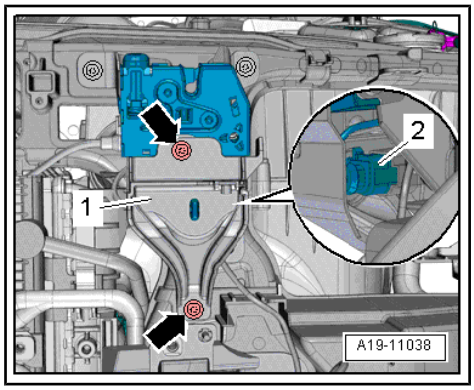

Note

Disregard -item 2-.

– Remove bolt -arrow- at bottom left and bottom right of radiator.

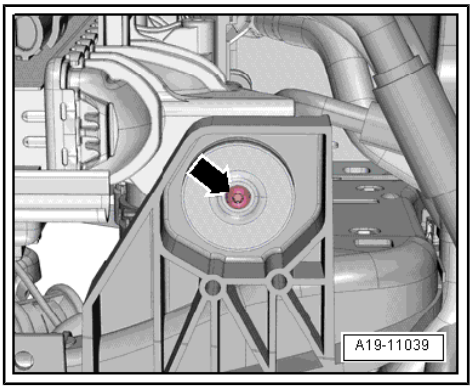

– Release retaining pins -1- for radiator on both sides -arrow- and pull out upwards.

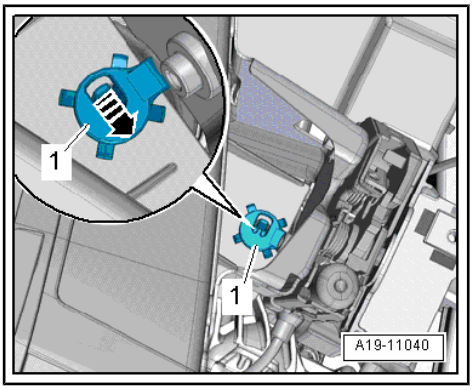

– Have a second mechanic release retaining clips -1- in direction of -arrow A- and lift condenser -2- out of mounts on radiator -arrows B-.

> ⚠ **Caution**
>
> ***Risk of damage to condenser, refrigerant lines and refrigerant hoses.***
>
> ♦ ***Do NOT stretch, kink or bend refrigerant lines and hoses.***

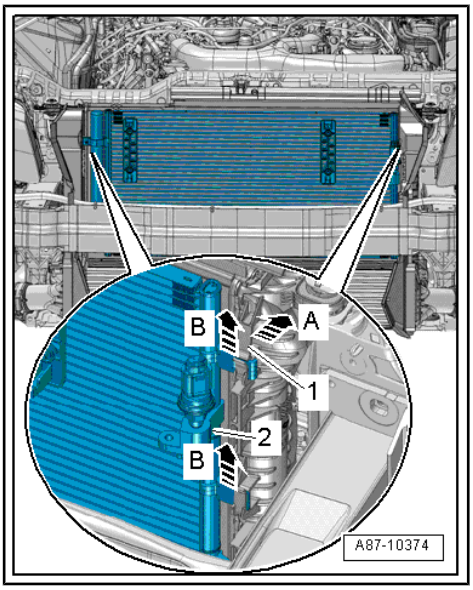

– Pivot condenser forwards with pipes/hoses attached.

– Detach radiator.

Protected by copyright. Copying for private or commercial purposes, in part or in whole, is not permitted unless authorised by AUDI AG. AUDI AG does not guarantee or accept any liability with respect to the correctness of information in this document. Copyright by AUDI AG.

– Press locking tabs on left and right sides of radiator cowl -arrow- and at the same time lift radiator cowl off radiator.

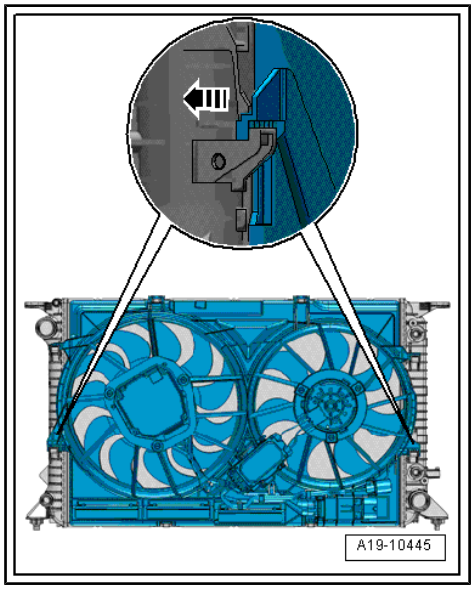

Installing

Installation is carried out in the reverse order; note the following:

Note

If there are slight impressions on the fins, refer to ⇒ page 9 .

Vehicles up to model year 2013:

– Install hydraulic fluid cooler ⇒ Running gear, axles, steering; Rep. gr. 48 ; Hydraulic power steering; Removing and installing hydraulic fluid cooler .

Protected by copyright. Copying for private or commercial purposes, in part or in whole, is not permitted unless authorised by AUDI AG. AUDI AG does not guarantee or assume any liability with respect to the correctness of information in this document.

All vehicles (continued):

Note

Do not reuse coolant.

– Connect coolant hose with plug-in connector ⇒ page 221 .

– Fill up with coolant ⇒ page 190 .

Tightening torques

- ⇒ “4.1 Exploded view - radiator/radiator fans”, page 220
- Support on lock carrier ⇒ General body repairs, exterior; Rep. gr. 50 ; Lock carrier; Exploded view - lock carrier
- Air ducts
  ⇒ “2.1 Exploded view - air cleaner housing”, page 244
- Bracket for horns ⇒ Electrical system; Rep. gr. 90 ; Horn; Exploded view - horn
- ⇒ General body repairs, exterior; Rep. gr. 63 ; Bumper (front); Exploded view - impact bar .

4.4 Removing and installing radiator fans

Removing

– Remove radiator with radiator cowl ⇒ page 223 .

– Remove bolts -1- or -2- and detach corresponding fan wheel.

– Remove bolts -arrows- on radiator fan.

– Move electrical wiring harness clear and detach radiator fan.

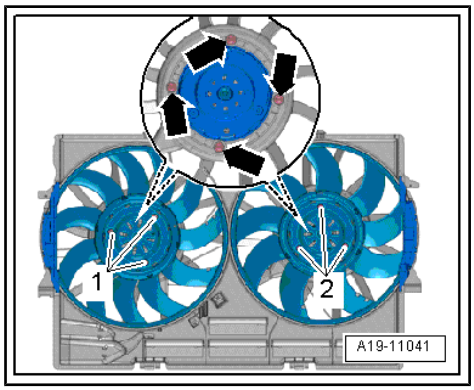

Installing

Installation is carried out in the reverse order; note the following:

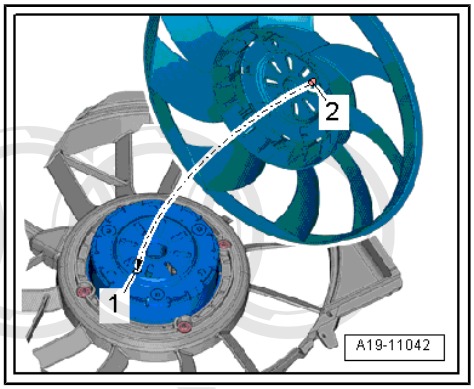

Note

Fit all cable ties in the original positions when installing.

– Note installation position of fan wheel:
• Pin -2- must engage in hole -1-.
– Install radiator with radiator cowl ⇒ page 223 .

Tightening torques

♦ ⇒ “4.1 Exploded view - radiator/radiator fans”, page 220

4.5 Removing and installing auxiliary radiator

Protected by copyright. Copying for private or commercial purposes, in part or in whole, is not permitted unless authorised by AUDI AG. AUDI AG does not guarantee or accept any liability with respect to the correctness of information in this document. Copyright by AUDI AG.

Note

The following description corresponds to the removal and installation of the auxiliary radiator (left-side). The procedure for the right side is similar.

Special tools and workshop equipment required

♦ Hose clamps, up to 25 mm - 3094-

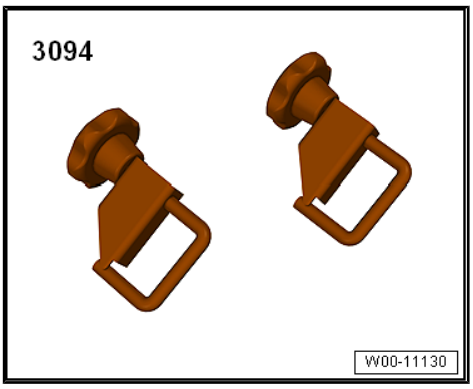

♦ Hose clip pliers - VAS 6362-

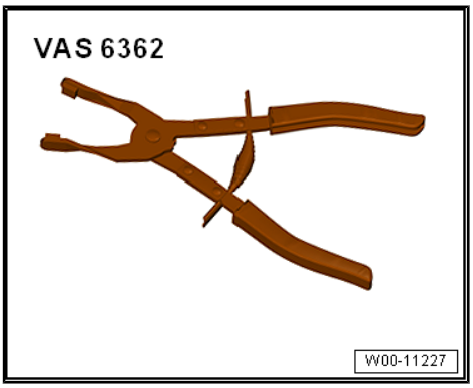

♦ Drip tray for workshop hoist - VAS 6208-

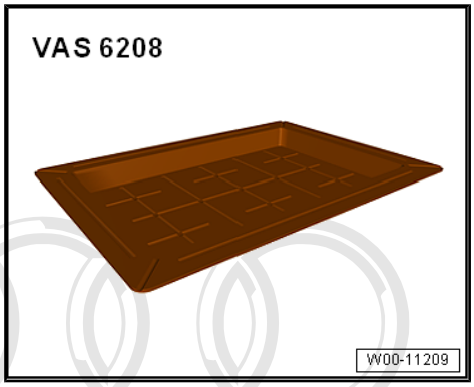

Removing

– Remove bumper cover (front) ⇒ General body repairs, exterior; Rep. gr. 63 ; Bumper (front); Removing and installing bumper cover .

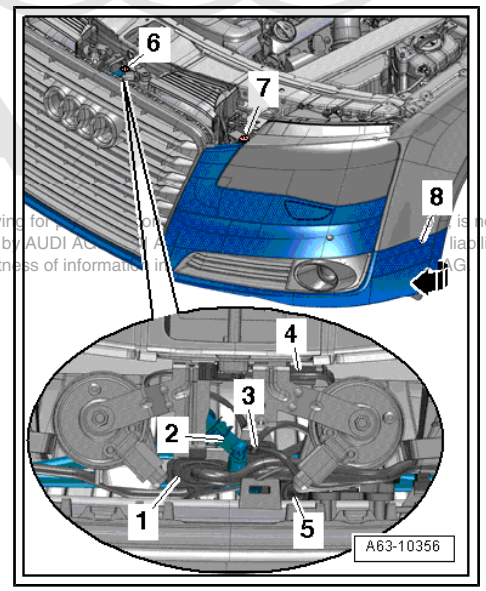

Protected by copyright. Copying for private or commercial purposes, in part or in whole, is not permitted unless authorised by AUDI AG. AUDI AG does not guarantee or assume any liability with respect to the correctness of information in this document.

– Remove connecting piece -3- for impact bar ⇒ General body repairs, exterior; Rep. gr. 63 ; Bumper (front); Exploded view - bumper cover .

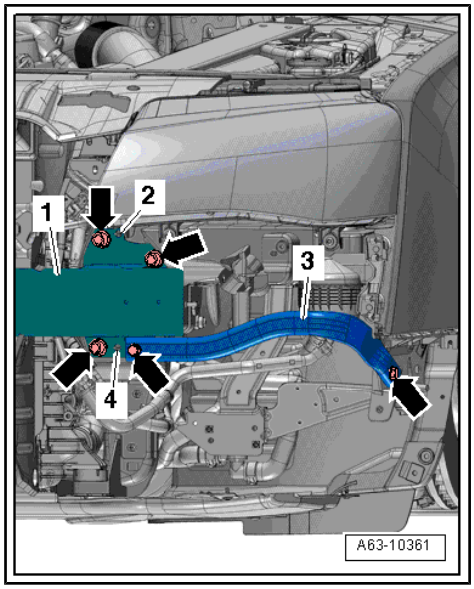

– Unclip air duct -2- for auxiliary radiator (left-side) towards left side of vehicle and remove.

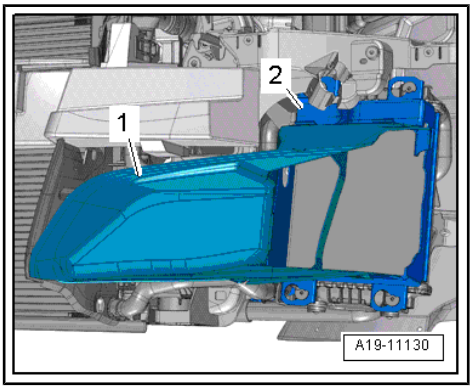

Note

Disregard -item 1-.

– Place drip tray for workshop hoist - VAS 6208- under auxiliary radiator (left-side).

– Clamp off coolant hoses using hose clamps up to 25 mm - 3094- , release hose clips -2- and disconnect coolant hoses from auxiliary radiator (left-side).

– Remove bolts -1-, lift to disengage auxiliary radiator (left-side) and detach.

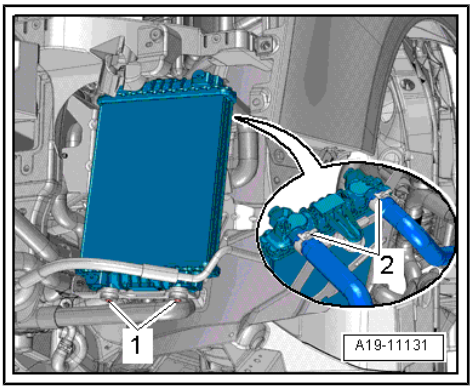

Installing

Installation is carried out in the reverse order; note the following:

Note

- *If there are slight impressions on the fins, refer to ⇒ page 9 .*
- *Secure all hose connections with the correct type of hose clips (same as original equipment) ⇒ Electronic parts catalogue .*

– Install bumper cover (front) ⇒ General body repairs, exterior; Rep. gr. 63 ; Bumper (front); Exploded view - bumper cover .

– Check coolant level ⇒ page 195 .

Tightening torques

- ⇒ “4.2 Exploded view - auxiliary radiator”, page 223
- ⇒ General body repairs, exterior; Rep. gr. 63 ; Bumper (front); Exploded view - impact bar .

Protected by copyright. Copying for private or commercial purposes, in part or in whole, is not permitted unless authorised by AUDI AG. AUDI AG does not guarantee or accept any liability with respect to the correctness of information in this document. Copyright by AUDI AG.

24 – Mixture preparation - injection

1 Injection system

⇒ "1.1 Overview of fitting locations - injection system", page 232

⇒ "1.2 Reducing pressure in high-pressure section of injection system", page 241

⇒ "1.3 Filling and bleeding fuel system", page 241

⇒ "1.4 Checking fuel system for leaks", page 242

Copyright by AUDI AG. Reproduction and distribution, or disclosure to third parties or use for competitive purposes, in part or in whole, is not permitted unless authorised by AUDI AG. AUDI AG does not guarantee or accept any liability with respect to the correctness of information in this document. Copyright by AUDI AG.

1.1 Overview of fitting locations - injection system

Engine compartment

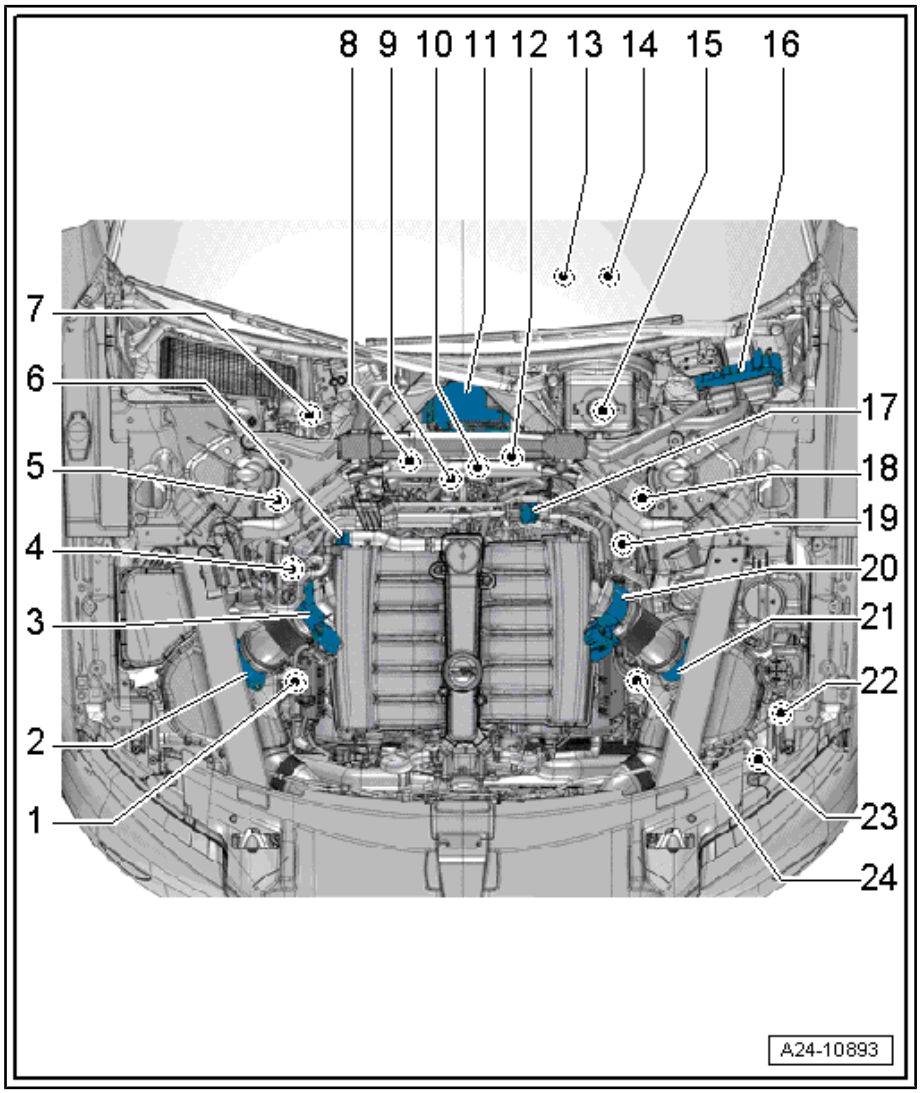

1 - Lambda probe - G39- (before catalytic converter)

- ❑ With Lambda probe heater - Z19-
- ❑ Exploded view ⇒ page 274

2 - Air mass meter - G70- / intake air temperature sender - G42-

- ❑ Exploded view ⇒ page 244

3 - Throttle valve module - J338-

- ❑ Including throttle valve drive for electric throttle - G186- , throttle valve drive angle sender 1 for electric throttle - G187- and throttle valve drive angle sender 2 for electric throttle - G188-
- ❑ Exploded view ⇒ page 248

4 - Lambda probe after catalytic converter - G130-

- ❑ With Lambda probe 1 heater after catalytic converter - Z29-
- ❑ Exploded view ⇒ page 274

5 - Lambda probe 2 - G108- (before catalytic converter)

- ❑ With Lambda probe heater 2 - Z28-
- ❑ Exploded view ⇒ page 274

6 - Heating element for crankcase breather - N79-

7 - Lambda probe 2 after catalytic converter - G131-

- ❑ With Lambda probe 2 heater after catalytic converter - Z30-
- ❑ Exploded view ⇒ page 274

8 - Secondary air pump motor 2 - V189-

- ❑ Exploded view ⇒ page 293

9 - Sender 2 for secondary air pressure - G610-

- ❑ Exploded view ⇒ page 293

10 - Sender 1 for secondary air pressure - G609-

- ❑ Exploded view ⇒ page 293

11 - Engine control unit 2 - J624-

- ❑ Fitting location ⇒ page 238

12 - Secondary air pump motor - V101-

- ❑ Exploded view ⇒ page 293

13 - Accelerator position sender - G79- and accelerator position sender 2 - G185-

- ❑ Fitting location ⇒ page 238

14 - Brake light switch - F-

- ❑ Fitting location ⇒ page 238

15 - Lambda probe 4 after catalytic converter - G288-

- ❑ With Lambda probe 4 heater after catalytic converter - Z65-
- ❑ Exploded view ⇒ page 274

16 - Engine control unit - J623-

- ❑ Fitting location ⇒ page 237

17 - Activated charcoal filter solenoid valve

- ❑ Activated charcoal filter solenoid valve (engine code CEJA); fitting location ⇒ page 239
- ❑ Activated charcoal filter solenoid valves (engine code CTNA); fitting location ⇒ page 239

18 - Lambda probe 3 after catalytic converter - G287-

- ❑ With Lambda probe 3 heater after catalytic converter - Z64-
- ❑ Exploded view ⇒ page 274

19 - Lambda probe 4 - G286- (before catalytic converter)

- ❑ With Lambda probe heater 4 - Z63-
- ❑ Exploded view ⇒ page 274

Protected by copyright. Copying for private or commercial purposes, in part or in whole, is not permitted unless authorised by AUDI AG. AUDI AG does not guarantee or accept any liability with respect to the correctness of information in this document. Copyright by AUDI AG.

20 - Throttle valve module 2 - J544-

- ❑ With throttle valve drive 2 - G296-, angle sender 1 for throttle valve drive 2 - G297- and angle sender 2 for throttle valve drive 2 - G298-
- ❑ Exploded view ⇒ page 248

21 - Air mass meter 2 - G246- / intake air temperature sender 2 - G299-

- ❑ Exploded view ⇒ page 244

22 - Brake vacuum pump - V192-

23 - Continued coolant circulation pump - V51-

24 - Lambda probe 3 - G285- (before catalytic converter)

- ❑ With Lambda probe heater 3 - Z62-
- ❑ Exploded view ⇒ page 274

Engine (from above)

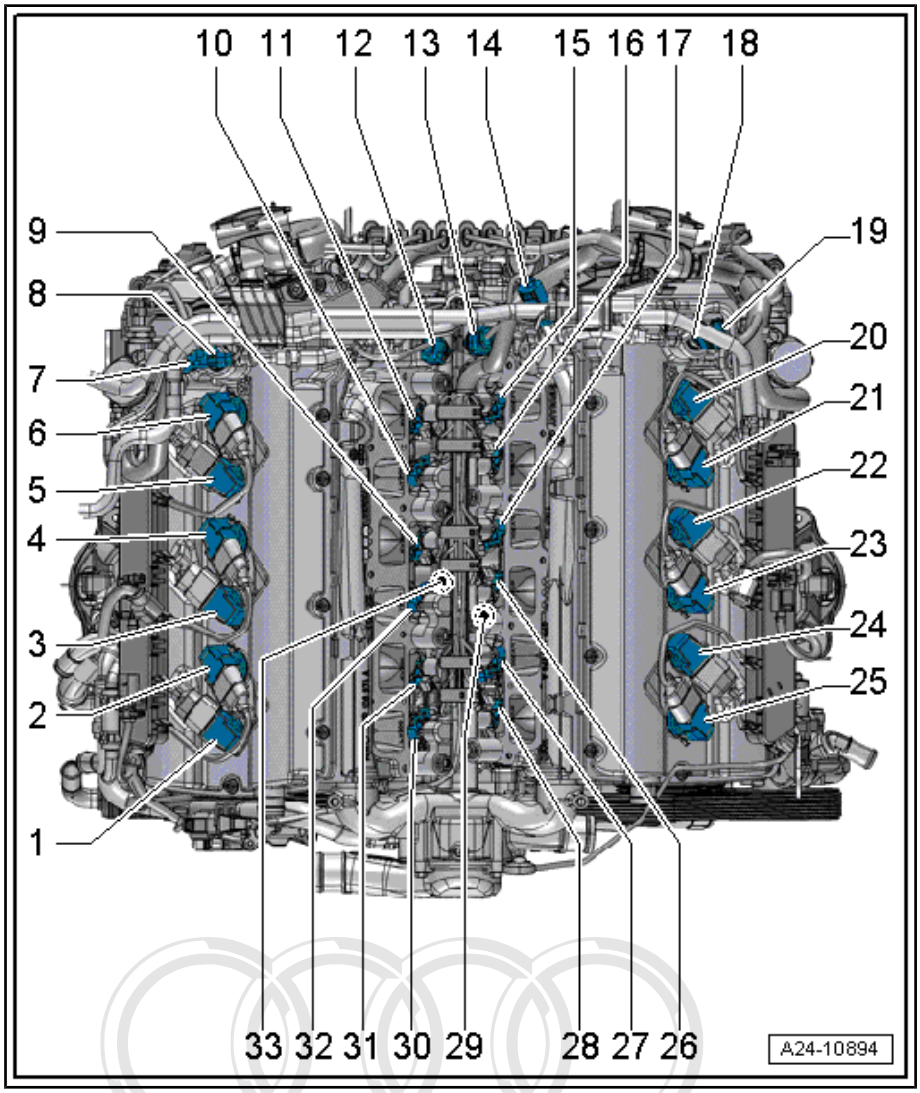

1 - Ignition coil 1 with output stage - N70-
- ❑ Exploded view ⇒ page 312

2 - Ignition coil 2 with output stage - N127-
- ❑ Exploded view ⇒ page 312

3 - Ignition coil 3 with output stage - N291-
- ❑ Exploded view ⇒ page 312

4 - Ignition coil 4 with output stage - N292-
- ❑ Exploded view ⇒ page 312

5 - Ignition coil 5 with output stage - N323-
- ❑ Exploded view ⇒ page 312

6 - Ignition coil 6 with output stage - N324-
- ❑ Exploded view ⇒ page 312

7 - Exhaust camshaft control valve 1 - N318-

8 - Camshaft control valve 1 - N205-

9 - Injector, cylinder 4 - N33-
- ❑ Exploded view ⇒ page 252

10 - Injector, cylinder 5 - N83-
- ❑ Exploded view ⇒ page 252

11 - Injector, cylinder 6 - N84-
- ❑ Exploded view ⇒ page 252

12 - Fuel pressure sender - G247-
- ❑ Exploded view ⇒ page 252

13 - Fuel pressure sender 2 - G624-

14 - Fuel pressure sender for low pressure - G410-

Protected by copyright. Copying for private or commercial purposes, in part or in whole, is not permitted unauthorised by AUDI AG. AUDI AG does not guarantee or accept any liability with respect to the correctness of information in this document. Copyright by AUDI AG.

15 - Injector, cylinder 12 - N302-
- ❑ Exploded view ⇒ page 252

16 - Injector, cylinder 11 - N301-
- ❑ Exploded view ⇒ page 252

17 - Injector, cylinder 10 - N300-
- ❑ Exploded view ⇒ page 252

18 - Camshaft control valve 2 - N208-

19 - Exhaust camshaft control valve 2 - N319-

20 - Ignition coil 12 with output stage - N330-
- ❑ Exploded view ⇒ page 312

21 - Ignition coil 11 with output stage - N329-
- ❑ Exploded view ⇒ page 312

22 - Ignition coil 10 with output stage - N328-
- ❑ Exploded view ⇒ page 312

23 - Ignition coil 9 with output stage - N327-
- ❑ Exploded view ⇒ page 312

24 - Ignition coil 8 with output stage - N326-
- ❑ Exploded view ⇒ page 312

25 - Ignition coil 7 with output stage - N325-
- ❑ Exploded view ⇒ page 312

26 - Injector, cylinder 9 - N299-
- ❑ Exploded view ⇒ page 252

27 - Injector, cylinder 8 - N86-
- ❑ Exploded view ⇒ page 252

28 - Injector, cylinder 7 - N85-
- ❑ Exploded view ⇒ page 252

29 - Knock sensor 2 - G66-
- ❑ Exploded view ⇒ page 312

30 - Injector, cylinder 1 - N30-
- ❑ Exploded view ⇒ page 252

31 - Injector, cylinder 2 - N31-
- ❑ Exploded view ⇒ page 252

32 - Injector, cylinder 3 - N32-
- ❑ Exploded view ⇒ page 252

33 - Knock sensor 3 - G198-
- ❑ Exploded view ⇒ page 312

Engine (shown from front)

Protected by copyright. Copying for private or commercial purposes, in part or in whole, is not permitted unless authorised by AUDI AG. AUDI AG does not guarantee or accept any liability with respect to the correctness of information in this document. Copyright by AUDI AG.

1 - Right electrohydraulic engine mounting solenoid valve - N145-

2 - Coolant temperature sender - G62-

3 - Electrical connector

- ❑ For knock sensor 3 - G198-
- ❑ Orange

4 - Electrical connector

- ❑ For knock sensor 2 - G66-
- ❑ Grey

5 - Oil pressure switch - F22-

- ❑ Exploded view ⇒ page 179

6 - Oil pressure switch for reduced oil pressure - F378-

- ❑ Exploded view ⇒ page 179

7 - Left electrohydraulic engine mounting solenoid valve - N144-

8 - Oil level and oil temperature sender - G266-

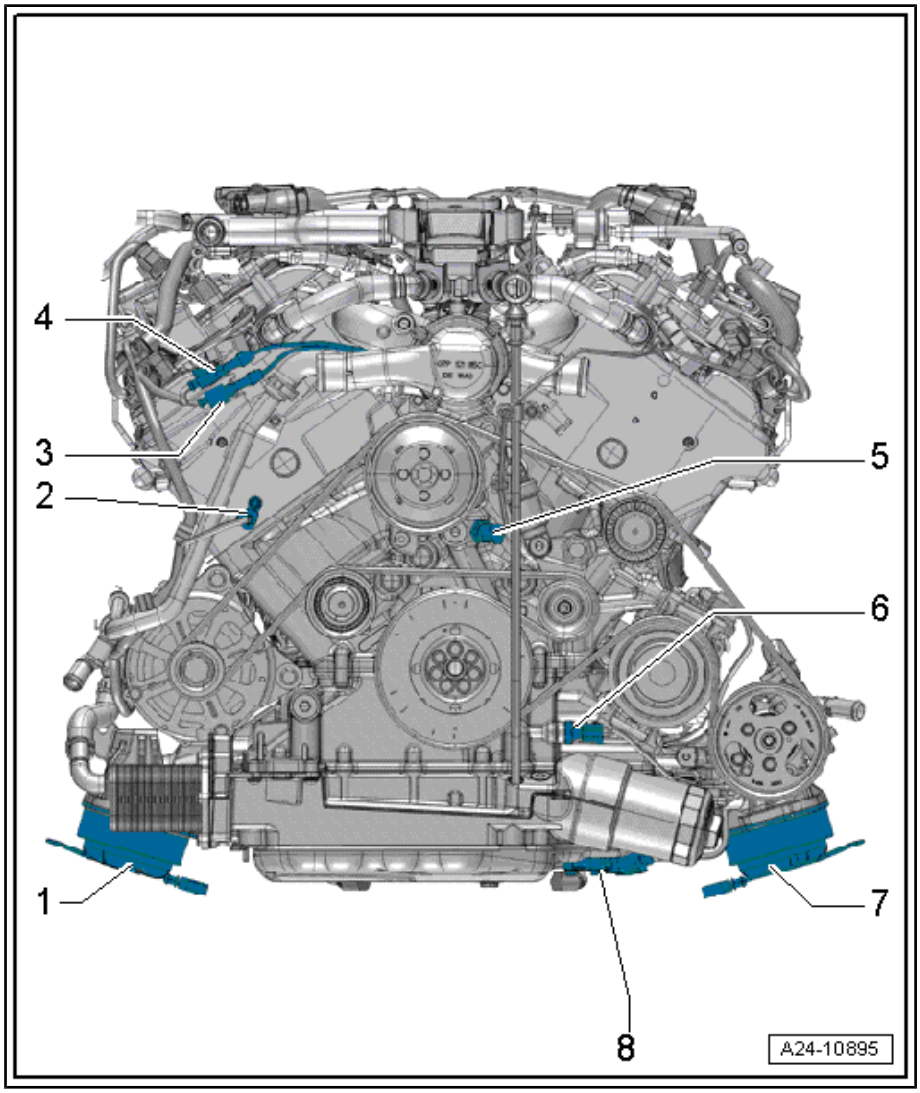

Engine (shown from rear)

Protected by copyright. Copying for private or commercial purposes, in part or in whole, is not permitted unless authorised by AUDI AG. AUDI AG does not guarantee or accept any liability with respect to the correctness of information in this document. Copyright by AUDI AG.

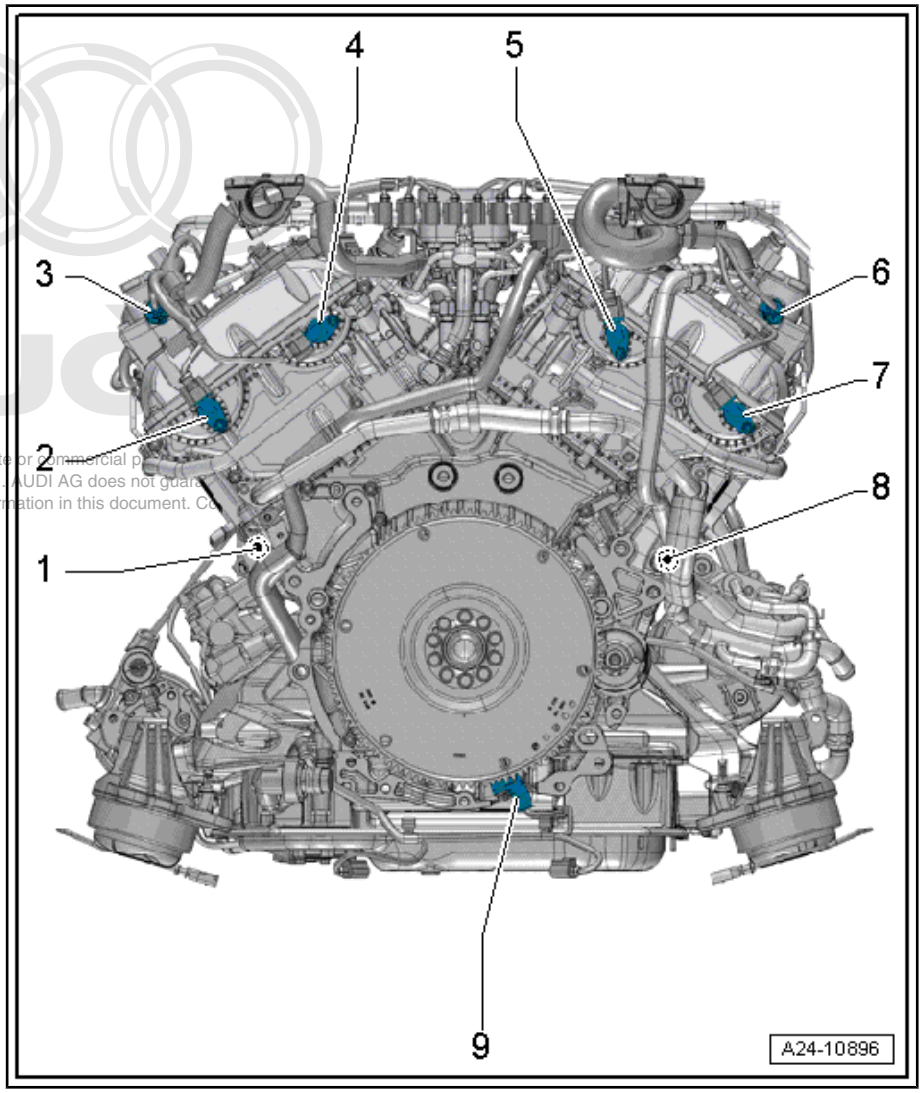

1 - Knock sensor 4 - G199-
- ❑ Exploded view ⇒ page 312

2 - Hall sender 4 - G301-
- ❑ Exploded view ⇒ page 312

3 - Fuel metering valve 2 - N402-
- ❑ Combined with high-pressure pump in one unit
- ❑ Cylinder bank 2
- ❑ Exploded view ⇒ page 264

Protected by copyright. Copying for private or commercial purposes, in part or in whole, is not permitted unless authorised by AUDI AG. AUDI AG does not guarantee the accuracy of information in this document. Copyright by AUDI AG.

4 - Hall sender 2 - G163-
- ❑ Exploded view ⇒ page 312

5 - Hall sender - G40-
- ❑ Exploded view ⇒ page 312

6 - Fuel metering valve - N290-
- ❑ Combined with high-pressure pump in one unit
- ❑ Cylinder bank 1
- ❑ Exploded view ⇒ page 264

7 - Hall sender 3 - G300-
- ❑ Exploded view ⇒ page 312

8 - Knock sensor 1 - G61-
- ❑ Exploded view ⇒ page 312

9 - Engine speed sender - G28-
- ❑ Exploded view ⇒ page 312

Fitting location of engine control unit - J623-

♦ In plenum chamber

Removing and installing ⇒ page 282

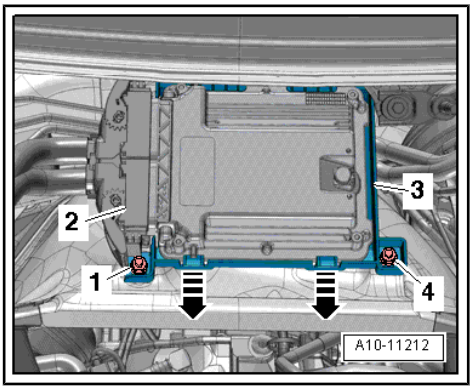

Fitting location of engine control unit 2 - J624-

♦ In plenum chamber

Removing and installing ⇒ page 282

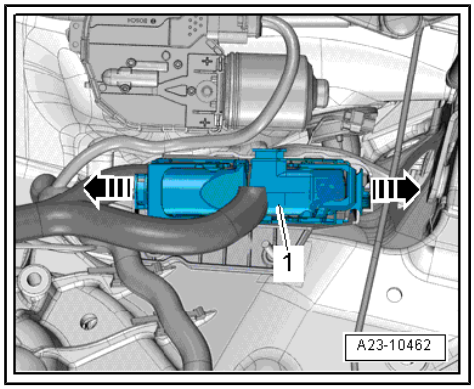

Protected by copyright. Copying for private or commercial purposes, in part or in whole, is not permitted unless authorised by AUDI AG. AUDI AG does not guarantee or assume any liability with respect to the correctness of information in this document. Copyright by AUDI AG.

Fitting location of accelerator position sender - G79- / accelerator position sender 2 - G185-

♦ In accelerator pedal module

Note

The accelerator position sender - G79- and accelerator position sender 2 - G185- are integrated in the accelerator pedal module and cannot be renewed individually.

Removing and installing ⇒ Fuel supply system, petrol engines; Rep. gr. 20 ; Accelerator mechanism; Removing and installing accelerator pedal module with accelerator position sender -G79- / -G185- .

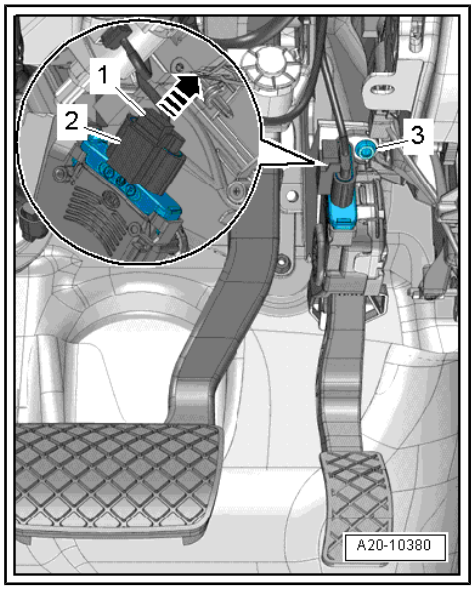

Fitting location of brake light switch - F-

♦ In footwell on brake pedal

Removing and installing ⇒ Brake system; Rep. gr. 45 ; Sensors; Removing and installing brake light switch

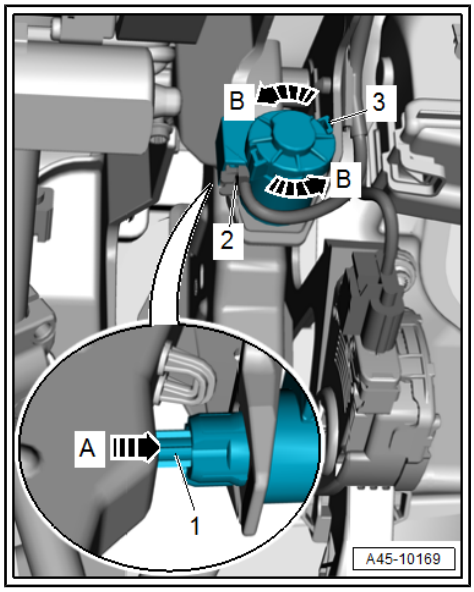

Engine speed sender - G28-

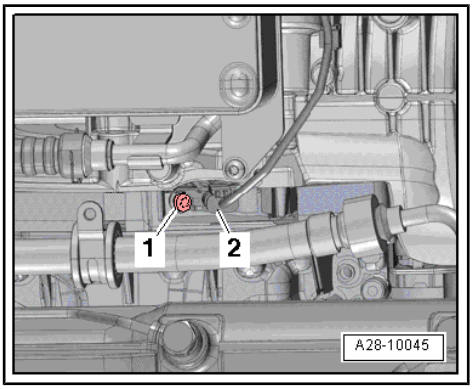

Connectors for Lambda probes

1 - Lambda probe - G39-

2 - Lambda probe 2 - G108-

3 - Lambda probe after catalytic converter - G130-

4 - Lambda probe 2 after catalytic converter - G131-

5 - Lambda probe 3 after catalytic converter - G287-

6 - Lambda probe 4 after catalytic converter - G288-

7 - Lambda probe 3 - G285-

8 - Lambda probe 4 - G286-

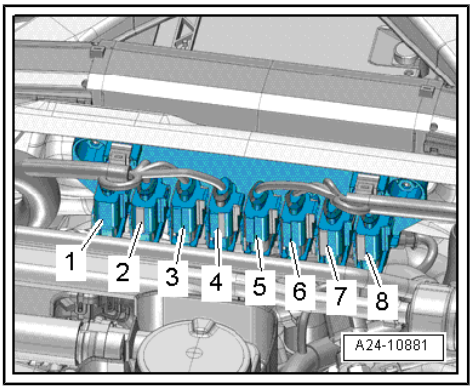

Activated charcoal filter solenoid valve 1 - N80- (engine code CE-JA)

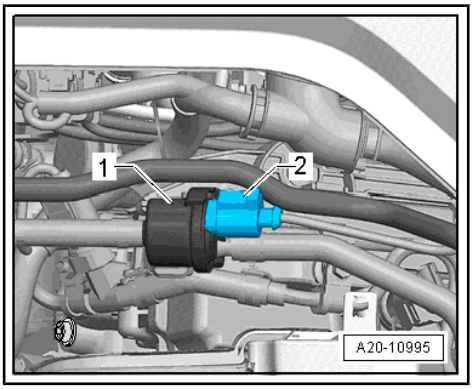

Activated charcoal filter solenoid valves (engine code CTNA)

1 - Activated charcoal filter solenoid valve 1 - N80-

2 - Activated charcoal filter solenoid valve 2 - N115-

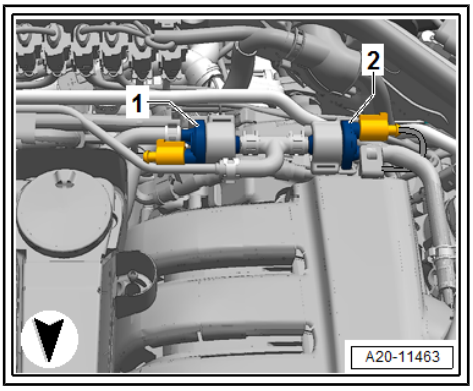

Protected by copyright. Copying for private or commercial purposes, in part or in whole, is not permitted unless authorised by AUDI AG. AUDI AG does not guarantee or accept any liability with respect to the correctness of information in this document. Copyright by AUDI AG.

Lambda probes on cylinder bank (right-side)

1 - Lambda probe 2 after catalytic converter - G131-

2 - Lambda probe after catalytic converter - G130-

3 - Lambda probe 2 - G108-

4 - Lambda probe - G39-

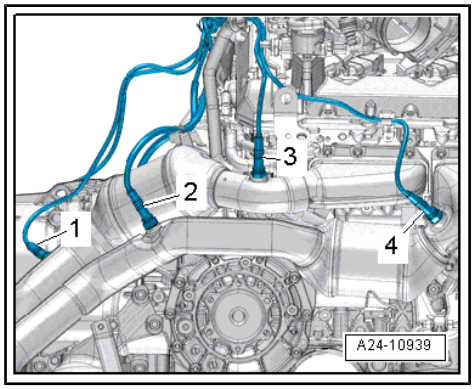

Lambda probes on cylinder bank (left-side)

1 - Lambda probe 3 - G285-

2 - Lambda probe 4 - G286-

3 - Lambda probe 3 after catalytic converter - G287-

4 - Lambda probe 4 after catalytic converter - G288-

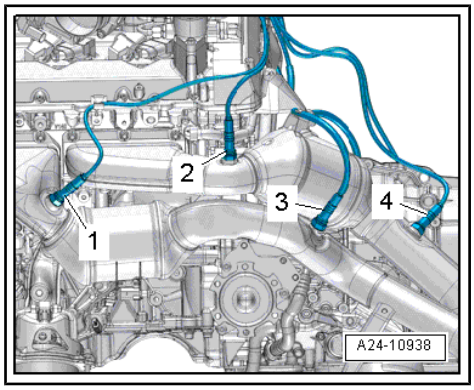

Exhaust flap on exhaust system (rear right) for vehicles up to model year 2013

1 - Exhaust flap 1 valve - N321-

2 - Vacuum unit

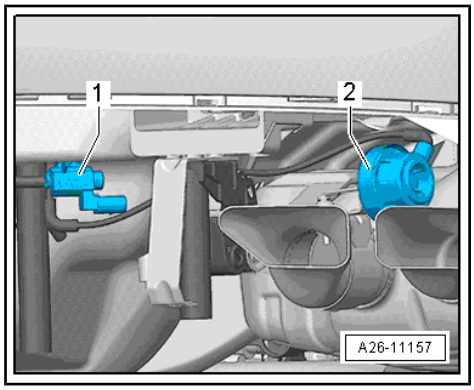

Exhaust flap on exhaust system (rear left) for vehicles up to model year 2013

1 - Exhaust flap 2 valve - N322-

2 - Vacuum unit

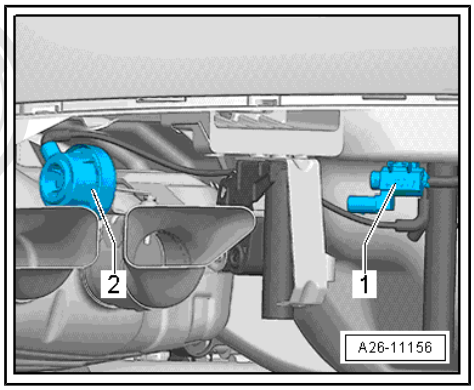

Protected by copyright. Copying for private or commercial purposes, in part or in whole, is not permitted unless authorised by AUDI AG. AUDI AG does not guarantee or accept any liability with respect to the correctness of information in this document. Copyright by AUDI AG.

Exhaust flap control unit - J883- / exhaust flap control unit 2 - J945- for vehicles from model year 2014 onwards

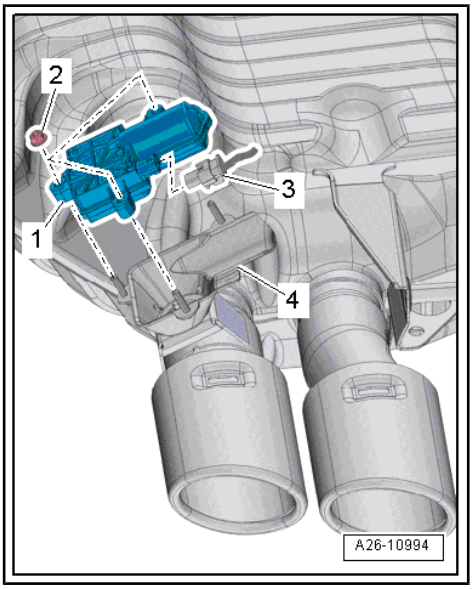

1.2 Reducing pressure in high-pressure section of injection system

WARNING

The fuel system operates at extremely high pressure. This can cause injury.

- *The fuel pressure in the high-pressure section of the injection system must be reduced to a residual pressure prior to opening the system.*

Protected by copyright. Copying for private or commercial purposes, in part or in whole, is not permitted unless authorised by AUDI AG. AUDI AG does not guarantee or accept any liability with respect to the correctness of information in this document. Copyright by AUDI AG.

The procedure is described in the ⇒ Vehicle diagnostic tester under Guided Functions, “Relieve fuel high pressure”.

WARNING

There is a risk of injury: avoid skin contact with fuel.

- *Wear safety goggles and protective clothing when opening the fuel system.*
- *Before opening the high-pressure section of the fuel system, place a clean cloth around the connection to catch escaping fuel.*

– The high-pressure system must be opened »immediately« after reducing the fuel pressure; wrap a clean cloth around the connection. Catch the escaping fuel.

Note

The pressure will increase again due to the effect of residual heat if the high-pressure system is not opened immediately.

1.3 Filling and bleeding fuel system

- Due to the design of the engine, with a fuel system pressurisation pump located in the fuel tank, it is not necessary to bleed the fuel system.

- The fuel system bleeds itself when the starter is operated.

Note

On vehicles with auxiliary heater, it is important to bleed the fuel supply line leading to the metering pump after working on the fuel delivery unit.

Special tools and workshop equipment required

- Diesel extractor - VAS 5226-

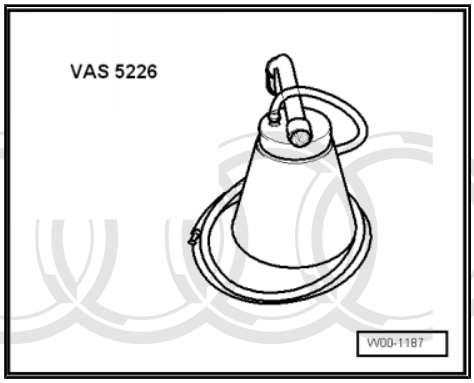

- Hand vacuum pump - VAS 6213-

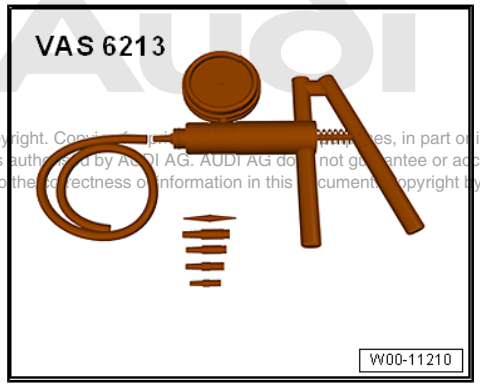

Protected by copyright. Copying for private or commercial purposes, in part or in whole, is not permitted unless authorised by AUDI AG. AUDI AG does not guarantee or accept any liability with respect to the correctness of information in this document. Copyright by AUDI AG.

Procedure

- Auxiliary heater switched off.
- Connect diesel extractor - VAS 5226- to compressed air.
- Remove fuel supply line -2- from fuel tank at metering pump -1-.
- Connect diesel extractor - VAS 5226- to fuel supply line with adapter from hand vacuum pump - VAS 6213- and bleed fuel supply line by operating extractor briefly.
- Re-attach fuel supply line to metering pump.
- Switch auxiliary heating on and run at full load for approx. 10 minutes.

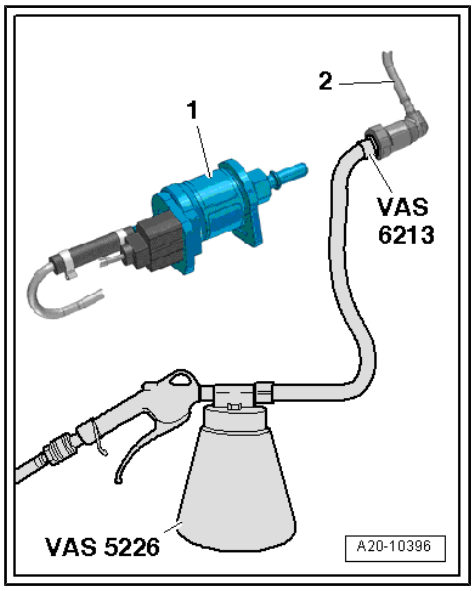

1.4 Checking fuel system for leaks

- Allow engine to run for several minutes at moderate rpm.
- Switch off ignition.

– Check complete fuel system for leaks.
– If leaks are found although the connections have been tightened to the correct torque, the relevant component must be renewed.
– Road-test vehicle and accelerate with full throttle at least once.
– Then inspect high-pressure section again for leaks.

Protected by copyright. Copying for private or commercial purposes, in part or in whole, is not permitted unless authorised by AUDI AG. AUDI AG does not guarantee or accept any liability with respect to the correctness of information in this document. Copyright by AUDI AG.

2 Air cleaner

⇒ “2.1 Exploded view - air cleaner housing”, page 244

⇒ “2.2 Removing and installing air cleaner housing”, page 245

2.1 Exploded view - air cleaner housing

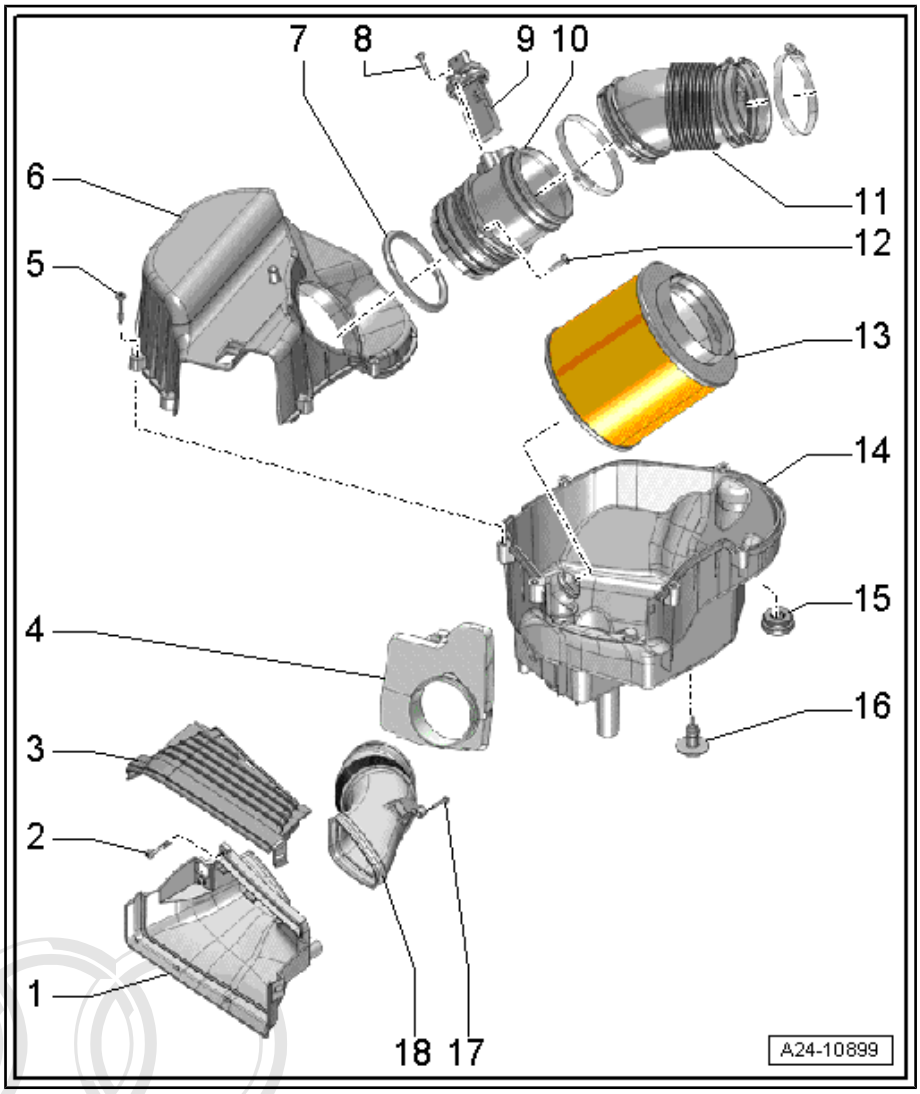

1 - Air duct

- ❑ Clean out salt deposits, dirt and leaves, etc.

2 - Bolt

- ❑ 1.5 Nm

3 - Cover

- ❑ For air duct

4 - Sealing element

5 - Bolt

- ❑ 2.5 Nm

6 - Air cleaner (top section)

- ❑ Clean out salt deposits, dirt and leaves, etc.

7 - O-ring

- ❑ Renew if damaged

8 - Bolt

- ❑ 1.5 Nm

9 - Air mass meter/intake air temperature sender

- ❑ Cylinder bank 1 (right-side): air mass meter - G70- / intake air temperature sender - G42-
- ❑ Cylinder bank 2 (left-side): air mass meter 2 - G246- / intake air temperature sender 2 - G299-
- ❑ Removing and installing ⇒ page 262

10 - Housing

11 - Air pipe

12 - Bolt

- ❑ 1.5 Nm

13 - Air filter element

- ❑ Use genuine air filter element ⇒ Electronic parts catalogue
- ❑ Change intervals ⇒ Maintenance tables
- ❑ Removing and installing ⇒ Maintenance ; Booklet 410

Protected by copyright. Copying for private or commercial purposes, in part or in whole, is not permitted unless authorized by AUDI AG. AUDI AG does not guarantee or assume any liability with respect to the correctness of information in this document. Copyright by AUDI AG.

14 - Air cleaner (bottom section)

- ❑ Clean out salt deposits, dirt and leaves, etc.
- ❑ Removing and installing ⇒ “2.2 Removing and installing air cleaner housing”, page 245

15 - Rubber grommet

16 - Mounting

- ❑ For air cleaner housing

17 - Bolt

- ❑ 2.5 Nm

18 - Air pipe

- ❑ Clean out salt deposits, dirt and leaves, etc.

Installing air hoses with screw-type clips

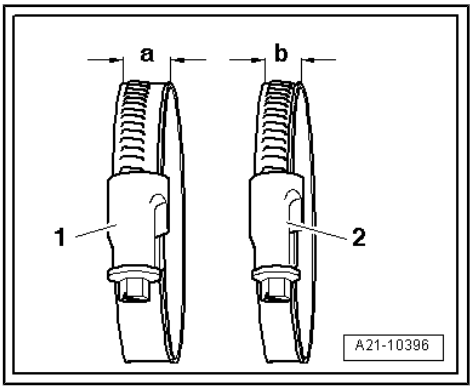

Note

- *Hose connections and air pipes and hoses must be free of oil and grease before assembly.*
- *Secure all hose connections with the correct type of hose clips (same as original equipment) ⇒ Electronic parts catalogue .*
- *To ensure that the air hoses can be properly secured at their connections, spray rust remover onto the worm thread of used hose clips before installing.*

Tightening torque for

1 - Hose clip -a- = 13 mm wide: 5.5 Nm

2 - Hose clip -b- = 9 mm wide: 3.4 Nm

2.2 Removing and installing air cleaner housing

Removing

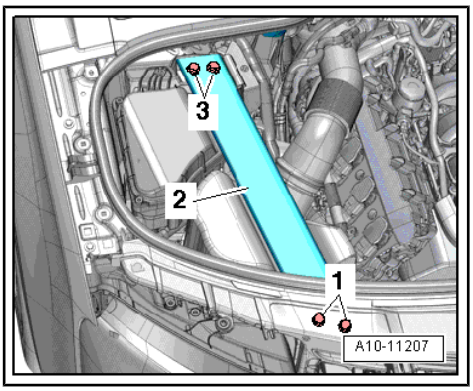

– Remove engine cover panel ⇒ page 62 .

– Remove longitudinal member (top right) -2- ⇒ General body repairs, exterior; Rep. gr. 50 ; Lock carrier; Exploded view - lock carrier .

Audi
Copyright by AUDI AG. Reproduction and use for commercial purposes, in part or in whole, is not permitted unless authorised by AUDI AG. AUDI AG does not guarantee or accept any liability with respect to the correctness of information in this document. Copyright by AUDI AG.

Air cleaner housing on left side:

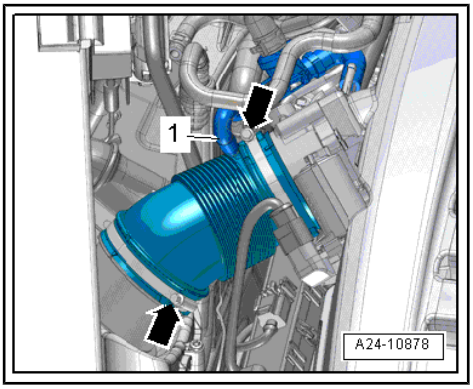

– Detach vacuum hose -1-.

– Release hose clips -arrows- and remove air pipe.

– Unplug electrical connector -3- from air mass meter - G70- .
– Detach air hose -4- and lift off air cleaner housing.
– If fitted, disconnect vacuum hose -2- and move clear -arrow-.
– If fitted, release fasteners and detach change-over valve -1- from air cleaner housing.

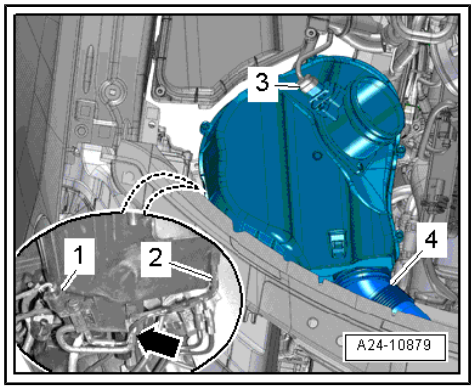

Air cleaner housing on right side:

– Release hose clips -arrows- and remove air pipe.

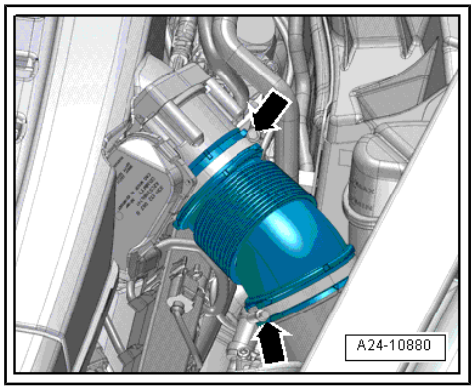

Protected by copyright. Copying for private or commercial purposes, in part or in whole, is not permitted unless authorised by AUDI AG. AUDI AG does not guarantee or accept any liability with respect to the correctness of information in this document. Copyright by AUDI AG.

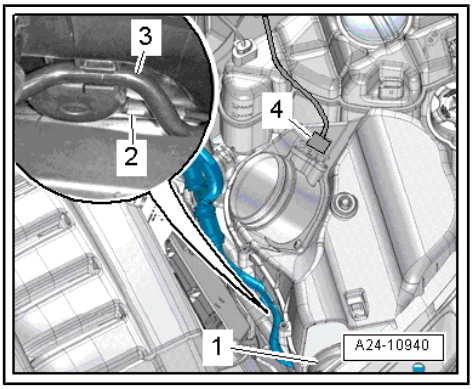

– Disconnect vacuum hose -2- and move clear vacuum line -3-.

– Unplug electrical connector -4- from air mass meter 2 - G246- .

– Detach air hose -1- and lift off air cleaner housing.

Installing

Note

- *The air cleaner housing MUST be clean.*
- *To prevent malfunctions, cover critical parts of the engine air intake (air mass meter, air pipes, etc.) with a clean cloth when blowing out the air cleaner housing with compressed air.*
- *Hose connections and air pipes and hoses must be free of oil and grease before assembly.*
- *Use a silicone-free lubricant when installing the air hoses.*
- *Secure all hose connections with the correct type of hose clips (same as original equipment) ⇒ Electronic parts catalogue .*

– Check for salt residue, dirt and leaves in air pipe (engine intake side).

– Check for dirt and leaves in air duct going from lock carrier to air cleaner housing.

Remaining installation steps are carried out in reverse sequence; note the following:

– Install engine cover panel ⇒ page 62 .

Tightening torques

- ⇒ Fig. ""Installing air hoses with screw-type clips"" , page 245
- ⇒ "2.1 Exploded view - air cleaner housing", page 244
- Upper longitudinal member ⇒ General body repairs, exterior; Rep. gr. 50 ; Lock carrier; Exploded view - lock carrier

Protected by copyright. Copying for private or commercial purposes, in part or in whole, is not permitted unless authorised by AUDI AG. AUDI AG does not guarantee or accept any liability with respect to the correctness of information in this document. Copyright by AUDI AG.

3 Intake manifold

⇒ “3.1 Exploded view - intake manifold”, page 248

⇒ “3.2 Removing and installing intake manifold”, page 249

⇒ “3.3 Removing and installing throttle valve module J338 / J544 ”, page 250

3.1 Exploded view - intake manifold

Note

Protected by copyright. Copying for private or commercial purposes, in part or in whole, is not permitted unless authorised by AUDI AG. AUDI AG does not guarantee or accept any liability with respect to the correctness of information in this document. Copyright by AUDI AG.

Illustration shows intake manifold (left-side).

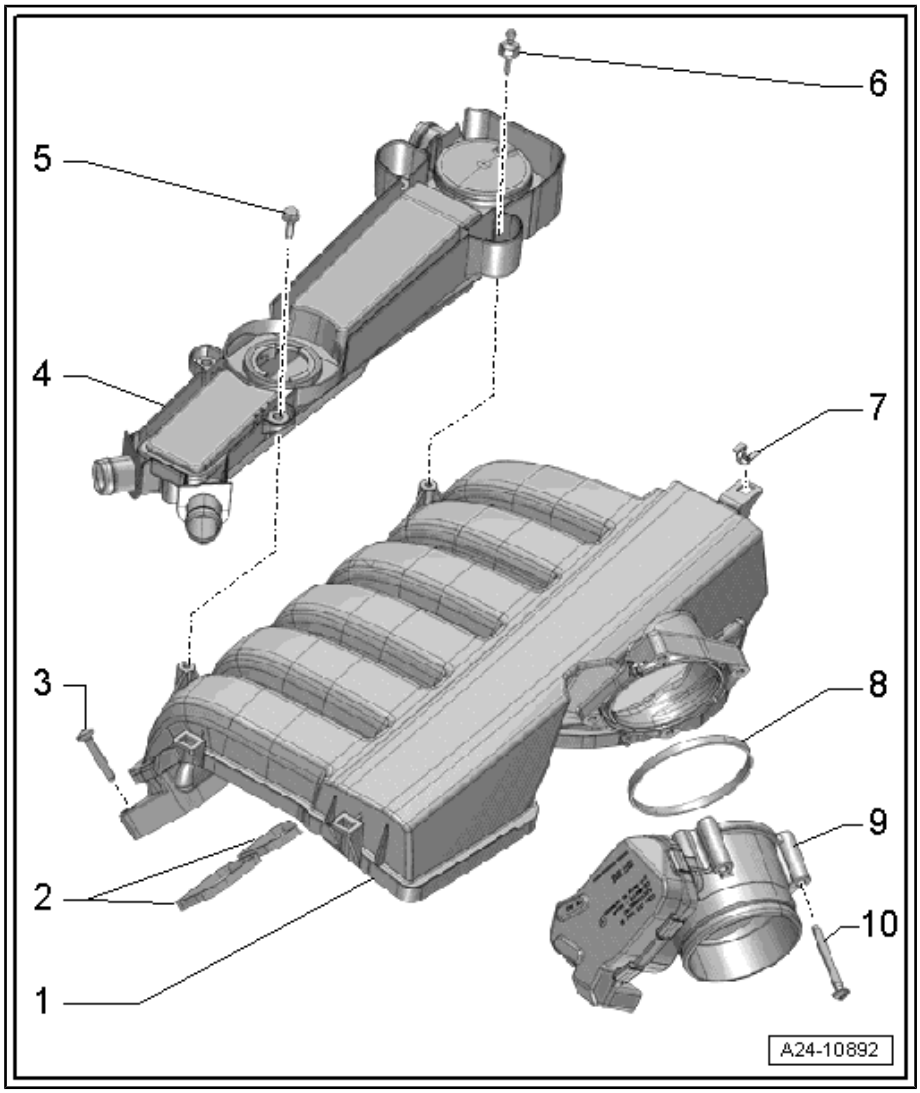

1 - Intake manifold
- ❑ Removing and installing ⇒ page 249

2 - Gaskets
- ❑ For intake manifold
- ❑ Renew

3 - Bolt
- ❑ Tighten mountings from centre outwards
- ❑ 9 Nm

4 - Housing
- ❑ For oil filler neck and pressure control valve of crankcase breather system

5 - Bolt
- ❑ Tightening torque ⇒ Item 10 (page 179)

6 - Ball stud
- ❑ For engine cover
- ❑ Tightening torque ⇒ Item 13 (page 179)

7 - Clip

8 - Seal
- ❑ Check for damage and renew if necessary

9 - Throttle valve module
- ❑ Right-side: throttle valve module - J338-
- ❑ Left-side: throttle valve module 2 - J544-
- ❑ Removing and installing ⇒ page 250
- ❑ “Adaption” must be performed after this component has been renewed; use a ⇒ Vehicle diagnostic tester

10 - Bolt
- ❑ Renew
- ❑ 9 Nm

3.2 Removing and installing intake manifold

Removing

– Remove engine cover panel ⇒ page 62 .

– Remove bolts -1- and ball studs -2-.

– Press release tabs and disconnect crankcase breather hoses -arrows-.

– Press release tabs and detach housing for oil filler neck to disconnect hose -3-.

– Remove insulating material.

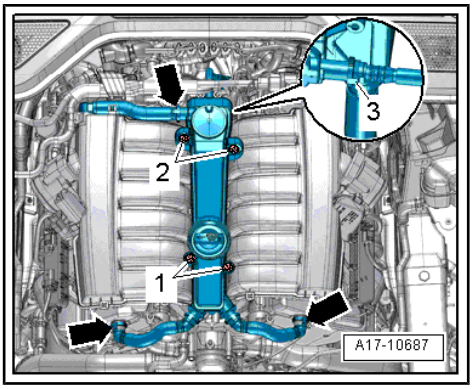

– Release hose clip and detach vacuum hose -1-.

– Release hose clips -arrows- and remove air pipes (left and right).

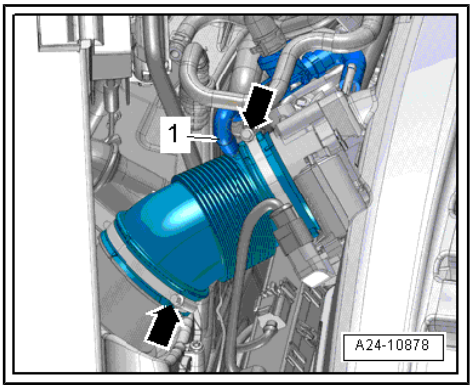

– Unplug electrical connectors (left and right) -1- for throttle valve modules -J338- / -J544- .

Note

Disregard -items 2, 3-.

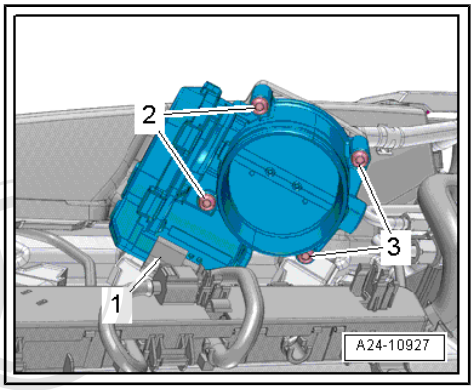

– Release hose clip -arrow- and detach vacuum hose (left and right).

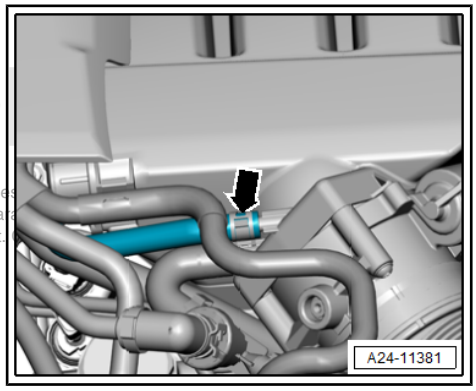

Protected by copyright. Copying for private or commercial purposes
permitted unless authorised by AUDI AG. AUDI AG does not guar
with respect to the correctness of information in this document.

Intake manifold (right-side):

– Release hose clip -2- and detach vacuum hose.

– Move clear fuel hose -1- and unplug electrical connector -3- for heater element for crankcase breather - N79- .

Continuation for both sides:

– Slacken bolts -arrows-, working from outside inwards and remove.

– Detach intake manifold.

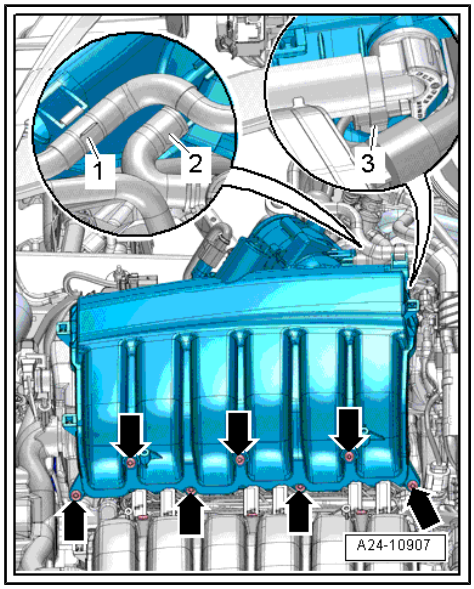

> **Caution**
>
> *Risk of irreparable damage to engine.*
>
> ♦ *Block off the intake ports with clean cloths to prevent small objects from dropping into the engine through the intake ports in the cylinder heads.*

– Remove insulating material.

Installing

Installation is carried out in the reverse order; note the following:

> **Note**
>
> ♦ *Renew seals and/or gaskets.*
>
> ♦ *Secure all hose connections with the correct type of hose clips (same as original equipment) ⇒ Parts catalogue.*

– Make sure seals and/or gaskets in intake manifold are positioned correctly.

– Install air hoses with screw-type clips ⇒ page 245 .

– Make sure that hoses and electrical wires are not trapped.

– Install engine cover panel ⇒ page 62 .

Tightening torques

♦ ⇒ “3.1 Exploded view - intake manifold”, page 248

3.3 Removing and installing throttle valve module -J338- / -J544-

Removing

– Remove engine cover panel ⇒ page 62 .

Protected by copyright. Copying for private or commercial purposes, in part or in whole, is not permitted unless authorised by AUDI AG. AUDI AG does not guarantee or accept any liability with respect to the correctness of information in this document. Copyright by AUDI AG.

Throttle valve module - J338- :

– Release hose clip and detach vacuum hose -1-.

Continuation for both sides:

– Release hose clips -arrows- and remove relevant air pipe.

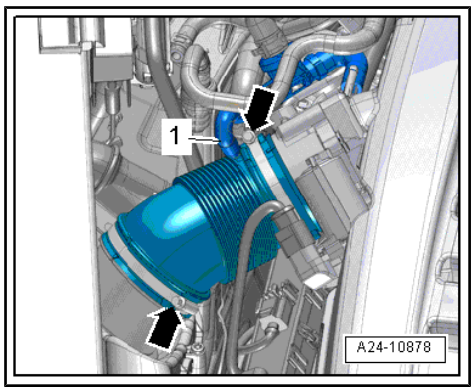

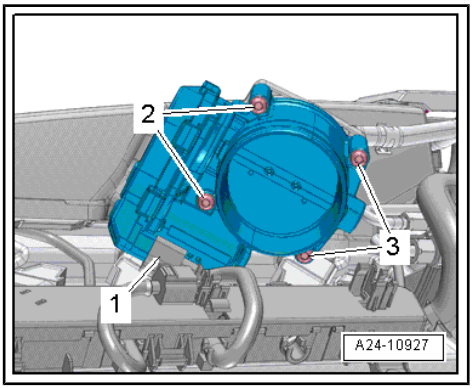

– Unplug electrical connector -1-.

– Remove bolts -2 and 3- and detach throttle valve module - J338- / -J544- .

Installing

Installation is carried out in the reverse order; note the following:

Note

- *Renew seals and/or gaskets.*
- *Hose connections and air pipes and hoses must be free of oil and grease before assembly.*
- *Secure all hose connections with the correct type of hose clips (same as original equipment) ⇒ Electronic parts catalogue .*
- *To secure the air hoses at their connections, spray rust remover onto the worm thread of the used hose clips before installing.*

– Install engine cover panel ⇒ page 62 .

"Adaption" must be performed after this component has been renewed; use a ⇒ Vehicle diagnostic tester.

Tightening torques

- ⇒ "3.1 Exploded view - intake manifold", page 248

Protected by copyright. Copying for private or commercial purposes, in part or in whole, is not permitted unless authorised by AUDI AG. AUDI AG does not guarantee or accept any liability with respect to the correctness of information in this document. Copyright by AUDI AG.

4 Injectors

⇒ “4.1 Exploded view - fuel rail with injectors”, page 252
⇒ “4.2 Removing and installing injectors”, page 253
⇒ “4.3 Cleaning injectors”, page 260

4.1 Exploded view - fuel rail with injectors

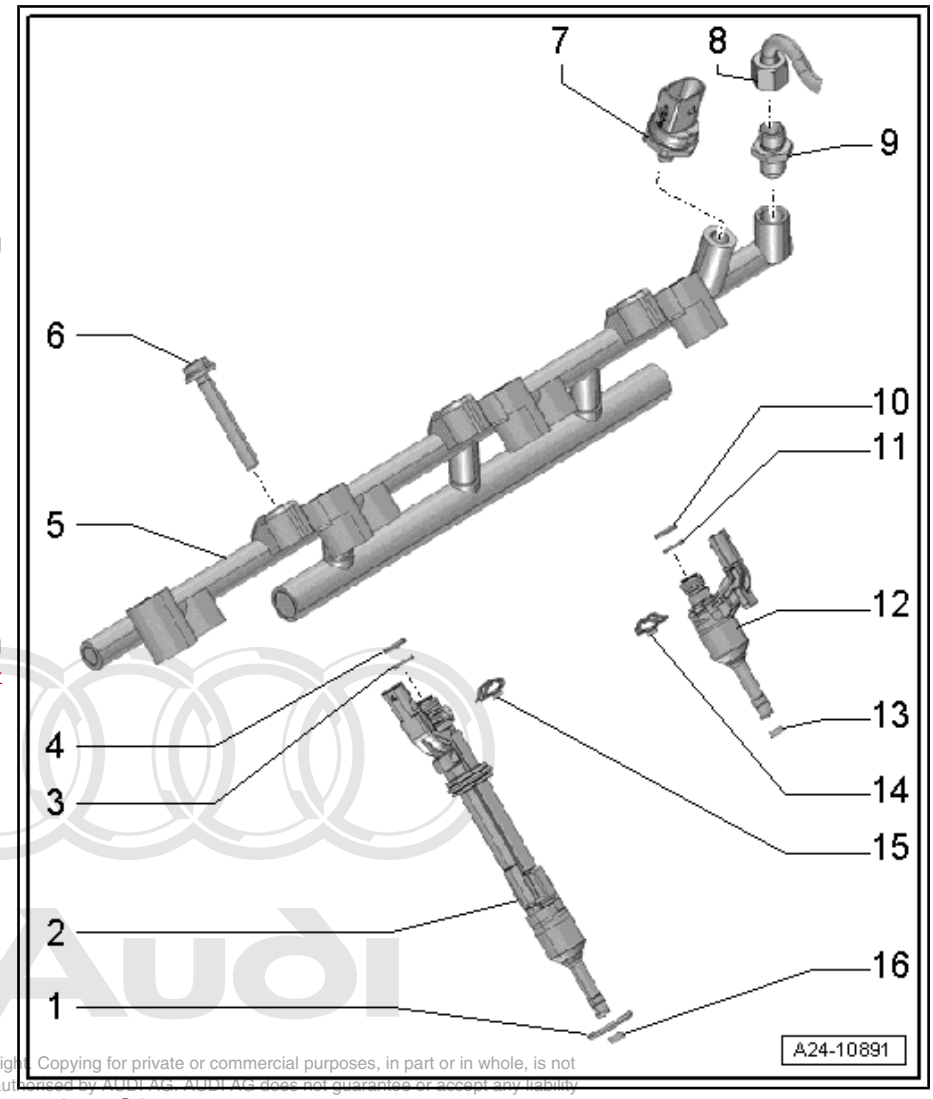

1 - O-ring
- ❑ Renew
- ❑ Lubricate lightly with clean engine oil

2 - Injector
- ❑ Long version
- ❑ Removing and installing ⇒ page 253

3 - Support ring
- ❑ Renew
- ❑ Make sure it is correctly seated

4 - O-ring
- ❑ Renew
- ❑ Lubricate lightly with clean engine oil

5 - Fuel rail
- ❑ Removing and installing ⇒ “4.2 Removing and installing injectors”, page 253
- ❑ Spring elements for injectors must be renewed before installation

6 - Bolt
- ❑ Renew
- ❑ 30 Nm + 90°
- ❑ Tighten mountings from centre outwards

7 - Fuel pressure sender
- ❑ Right-side fuel pressure sender - G247-
- ❑ Left-side fuel pressure sender 2 - G624-
- ❑ Removing and installing ⇒ page 262
- ❑ Lubricate sealing surface and threads lightly with clean engine oil
- ❑ 27 Nm

Protected by copyright. Copying for private or commercial purposes, in part or in whole, is not permitted unless authorised by AUDI AG. AUDI AG does not guarantee or accept any liability with respect to the correctness of information in this document. Copyright by AUDI AG.

8 - High-pressure pipe

> ⚠ **WARNING**
> *The fuel system operates at extremely high pressure. This can cause injury.*
> *The fuel pressure in the high-pressure section of the injection system must be reduced to a residual pressure prior to opening the system* ⇒ page 241 *.*

- ❑ Removing and installing ⇒ page 270
- ❑ Do not alter shape
- ❑ Check for damage before re-installing
- ❑ To loosen and tighten high-pressure pipe, counterhold at pipe connection -item 9-
- ❑ Lubricate threads of union nuts with fuel
- ❑ 27 Nm

9 - Connection

- ❑ 40 Nm

10 - O-ring

- ❑ Renew
- ❑ Lubricate lightly with clean engine oil

11 - Support ring

- ❑ Renew
- ❑ Make sure it is correctly seated

12 - Injector

- ❑ Short version
- ❑ Removing and installing ⇒ page 253

13 - Combustion chamber ring seal

- ❑ Renewing after injector has been removed ⇒ “4.2 Removing and installing injectors”, page 253
- ❑ Do not apply grease or use any other lubricants

14 - Spring element

- ❑ Make sure it is correctly seated
- ❑ Always renew if fuel rail is removed

15 - Spring element

- ❑ Make sure it is correctly seated
- ❑ Always renew if fuel rail is removed

16 - Combustion chamber ring seal

- ❑ Renewing after injector has been removed ⇒ “4.2 Removing and installing injectors”, page 253
- ❑ Do not apply grease or use any other lubricants

Copyright by AUDI AG. Copying for private or commercial purposes, in part or in whole, is not permitted unless authorised by AUDI AG. AUDI AG does not guarantee or accept any liability with respect to the correctness of information in this document. Copyright by AUDI AG.

4.2 Removing and installing injectors

Special tools and workshop equipment required

- Tool set for FSI engines - T10133-

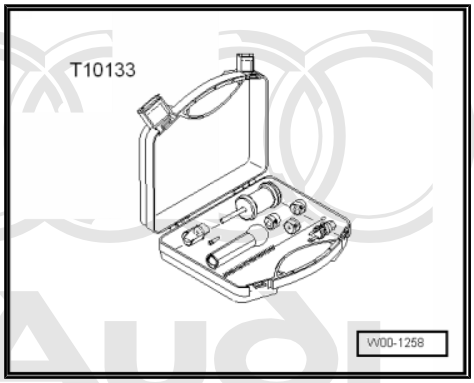

Removing

Protected by copyright. Copying for private or commercial purposes, in part or in whole, is not permitted unless authorised by AUDI AG. AUDI AG does not guarantee or accept any liability with respect to the correctness of information in this document. Copyright by AUDI AG.

WARNING

The fuel system operates at extremely high pressure. This can cause injury.

- *The fuel pressure in the high-pressure section of the injection system must be reduced to a residual pressure prior to opening the system* ⇒ page 241 *.*

– Remove intake manifolds ⇒ page 249 .

– Detach electrical connectors -1 and 2- from bracket.

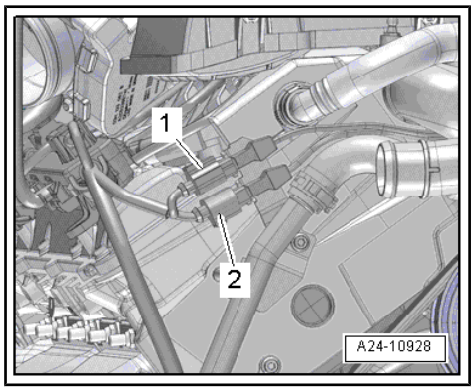

– Remove nuts -arrows- on both sides and union nut -2-.

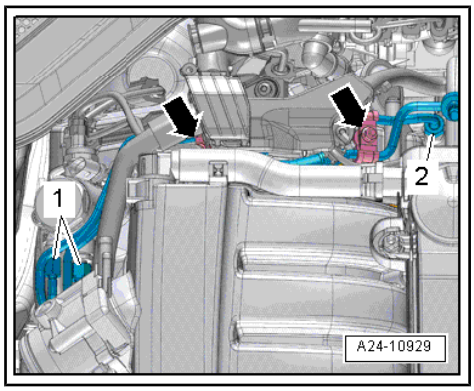

Note

Disregard -item 1-.

– Unplug electrical connector -1- for fuel pressure sender - G247- or connector -2- for fuel pressure sender 2 - G624- .
– Unplug electrical connectors at injectors that are to be removed.

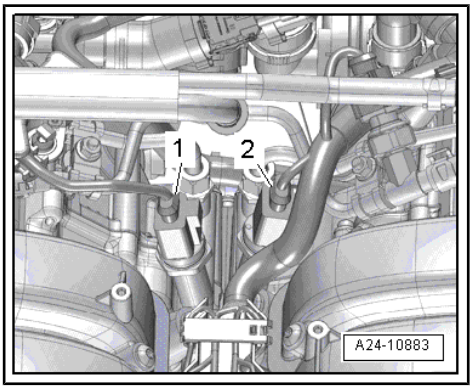

– Unscrew bolts -arrows- for fuel rail that is to be removed.
– Pull out fuel rail -1 or 2-, as required.

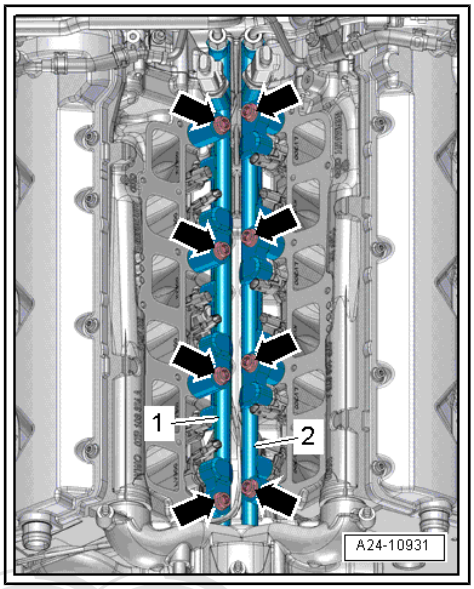

Note

When detaching fuel rails, make sure injectors remain in cylinder head.

– Press O-ring by hand upwards (as illustrated) and remove from injector.
– Screw striker - T10133/3- onto puller - T10133/15- .

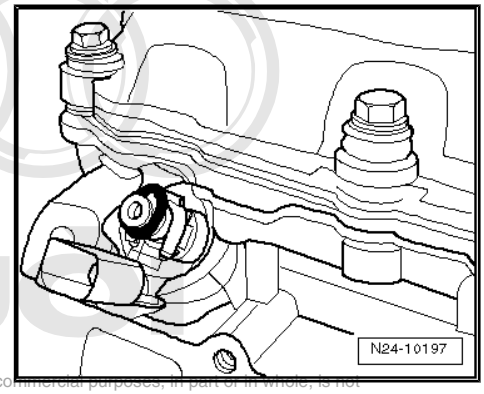

Protected by copyright. Copying for private or commercial purposes, in part or in whole, is not permitted unless authorised by AUDI AG. AUDI AG does not guarantee or accept any liability with respect to the correctness of information in this document. Copyright by AUDI AG.

– Then guide puller - T10133/15- into groove -arrow- on injector.

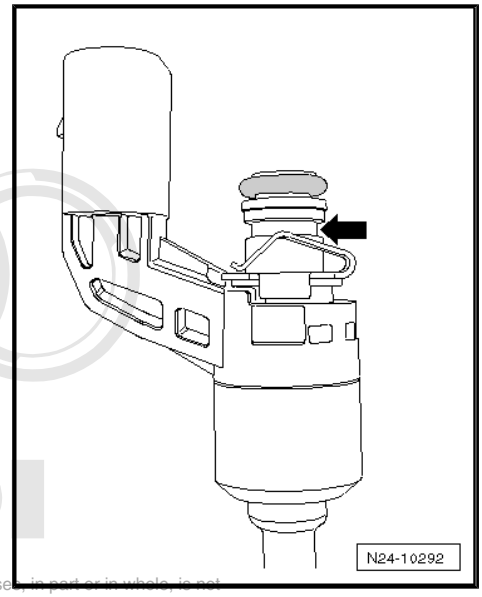

Protected by copyright. Copying for private or commercial purposes, in part or in whole, is not permitted unless authorised by AUDI AG. AUDI AG does not guarantee or accept any liability with respect to the correctness of information in this document. Copyright by AUDI AG.

Note

The spring element -arrow- must not be removed before the injectors are pulled out.

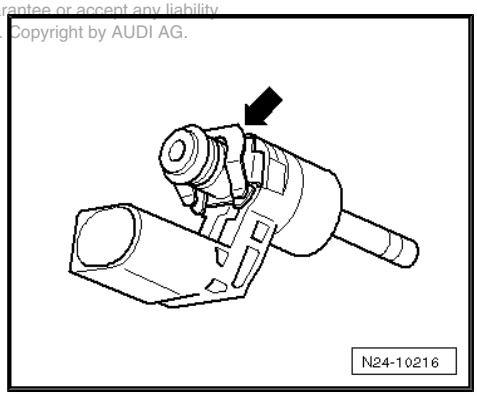

– Pull out injector by knocking carefully.

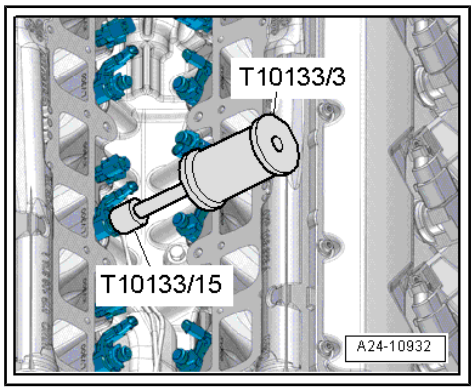

– Carefully remove old combustion chamber ring seal -arrow-. To do so, cut open combustion chamber ring seal using knife or prise open with small screwdriver and then pull off forwards.

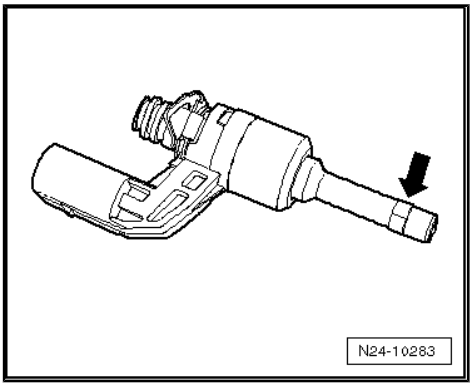

Note

Take care not to damage groove on injector. The injector must be renewed if the groove is damaged.

Installing

Note

- *Renew combustion chamber ring seal, support ring, spring element and O-ring.*
- *Lubricate O-rings of injectors lightly with clean engine oil.*
- *The injectors must be re-installed on the same cylinders.*

– Clean bore in cylinder head with nylon brush - T10133/4- .

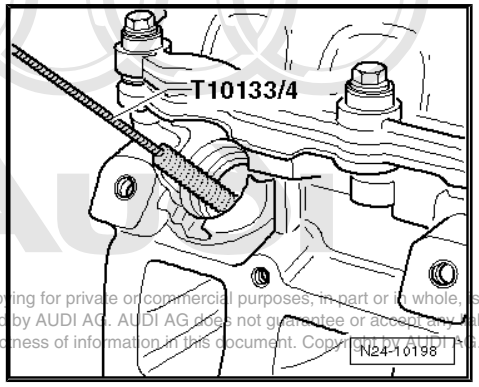

Protected by copyright. Copying for private or commercial purposes, in part or in whole, is not permitted unless authorised by AUDI AG. AUDI AG does not guarantee or accept any liability with respect to the correctness of information in this document. Copyright by AUDI AG.

– Remove old seal and clean ring groove where seal was located -arrow-. Remove any carbon deposits with a brass wire brush.

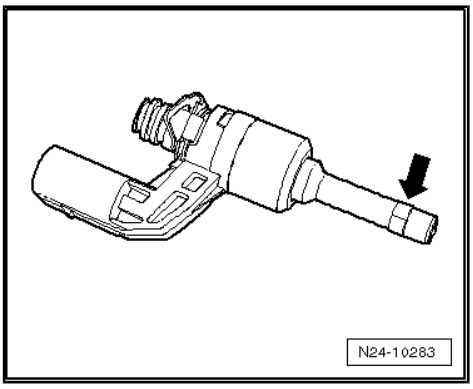

– Fit new seal -1- onto assembly cone - T10133/5- . Push seal lightly onto assembly cone - T10133/5- as far as possible using assembly sleeve - T10133/6- (knurled side faces towards seal -1-).

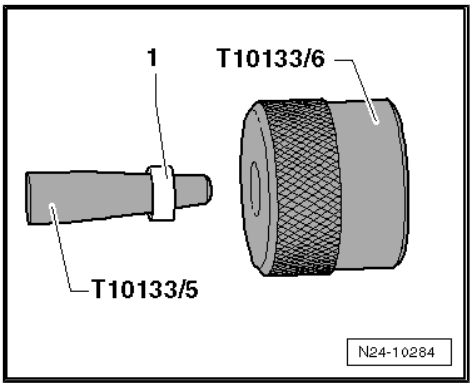

– Turn round assembly sleeve - T10133/6- (knurled side no longer faces towards seal) and push seal -1- up to end of assembly cone - T10133/5- .

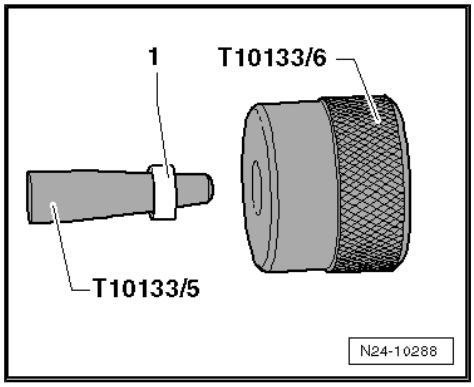

– Now fit assembly cone - T10133/5- with seal from the front onto injector. Push seal further onto injector using assembly sleeve - T10133/6- .

The seal is not yet in its groove.

– Remove assembly sleeve - T10133/6- and assembly cone - T10133/5- .

– Slide seal by hand into ring groove.

– Fit spacer sleeve - T10133/11- onto body of injector.

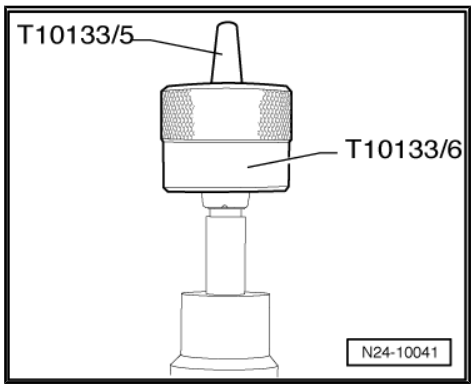

Note

The combustion chamber ring seal is widened when it is pushed onto the injector. After pushing it on, it therefore has to be compressed again. This is done in two stages, as described below.

– Now push calibration sleeve - T10133/7- over seal until it makes contact with spacer sleeve - T10133/11- .

– Pull calibration sleeve - T10133/7- off again.

– Now push calibration sleeve - T10133/8- over seal until it makes contact with spacer sleeve - T10133/11- .

– Pull calibration sleeve - T10133/8- off again.

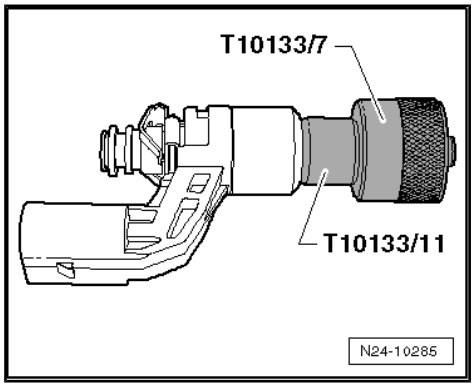

The teflon ring seal is now installed in the correct position.

Renewing support ring:

– Remove O-ring -3-.

– Cut open support ring -2- with small side-cutting pliers and remove support ring.

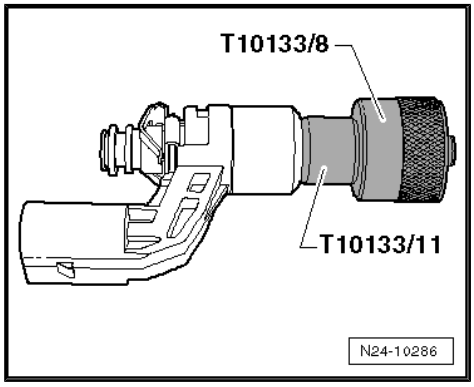

Protected by copyright. Copying for private or commercial purposes, in part or in whole, is not permitted unless authorised by AUDI AG. AUDI AG does not guarantee or accept any liability with respect to the correctness of information in this document. Copyright by AUDI AG.

– Detach spring element -1- from injector and fit locking plate - T10133/12- in place of spring element.
– Fit a new support ring -1- onto assembly cone - T10133/13- and fit onto injector (as illustrated).

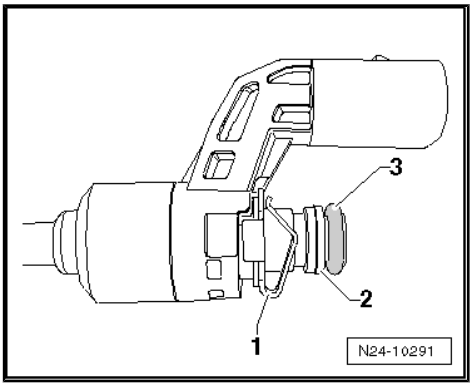

– Using calibration sleeve - T10133/14- (knurled side faces towards injector), push support ring -1- into first groove -arrow- on injector.
– Then turn round calibration sleeve - T10133/14- (knurled side now faces away from injector). Push calibration sleeve over support ring -1- in direction of -arrow- until it makes contact with locking plate - T10133/12- .
– Pull calibration sleeve - T10133/14- off again.

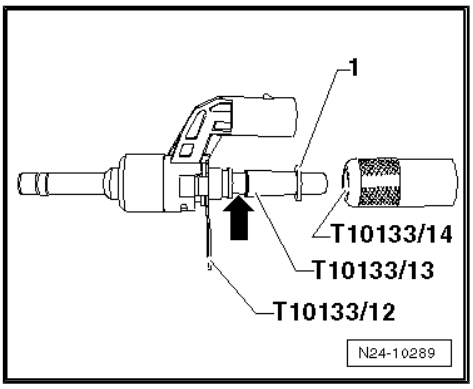

Support ring now has its correct installation depth.

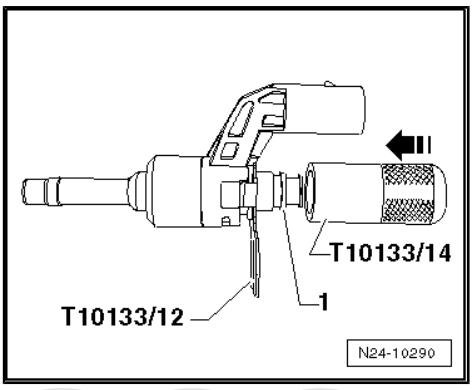

Protected by copyright. Copying for private or commercial purposes, in part or in whole, is not permitted unless authorised by AUDI AG. AUDI AG does not guarantee or accept any liability with respect to the correctness of information in this document. Copyright by AUDI AG.

– Then fit a new spring element -1- in place of locking plate - T10133/12- and fit a new O-ring -3- against support ring -2-.

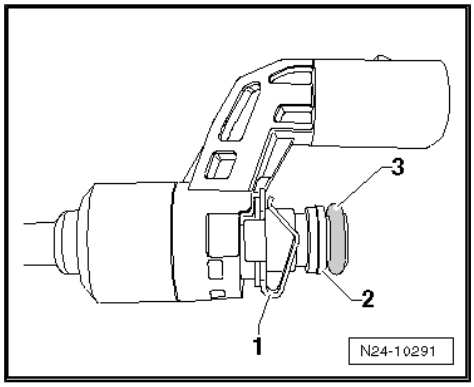

Note

Do not apply grease to combustion chamber ring seal or use any other lubricants.

– To make it easier to install injector in fuel rail, lubricate new O-ring lightly with clean engine oil before installing it.

– Push injector by hand as far as it will go into aperture in cylinder head (do not use oil or grease). Ensure that the injector is properly seated in the cylinder head.

Note

It should be possible to insert injector easily. If necessary wait until the combustion chamber ring seal has contracted sufficiently.

• Electrical connector of injector must engage in recess in cylinder head.

Remaining installation steps are carried out in reverse sequence; note the following:

– Install intake manifolds ⇒ page 249 .

Tightening torques

♦ ⇒ “4.1 Exploded view - fuel rail with injectors”, page 252

4.3 Cleaning injectors

Special tools and workshop equipment required

♦ Ultrasonic cleaning unit - VAS 6418-

♦ Mounting plate for injection modules - VAS 6418/1-

♦ Cleaning fluid ⇒ Electronic parts catalogue

Cleaning

– Remove injectors ⇒ page 253 .

Note

Observe safety precautions and operating instructions for ultrasonic unit.

– Ultrasonic unit must be filled with cleaning fluid.

Protected by copyright. Copying for private or commercial purposes, in part or in whole, is not permitted unless authorised by AUDI AG. AUDI AG does not guarantee or accept any liability with respect to the correctness of information in this document. Copyright by AUDI AG.

Note

Ultrasonic unit must be filled with cleaning fluid up to top edge of apertures (see detail in illustration).

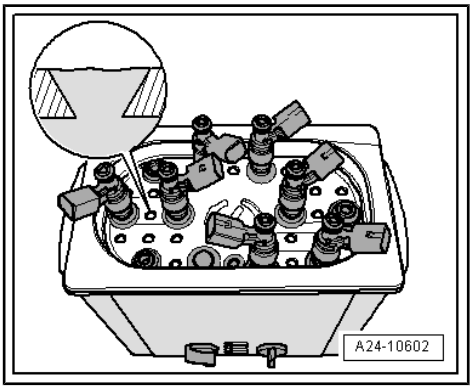

- Insert injectors -1- all the way into mounting plate for injection modules - VAS 6418/1- -2-.
- Set rotary knob -4- to a temperature of 50°C.
- Select a cleaning time of 30 minutes with rotary knob -5-.
- Switch on ultrasonic unit with button -3-.

Protected by copyright. Copying for private or commercial purposes, in part or in whole, is not permitted unless authorised by AUDI AG. AUDI AG does not guarantee or accept any liability with respect to the correctness of information in this document. Copyright by AUDI AG.

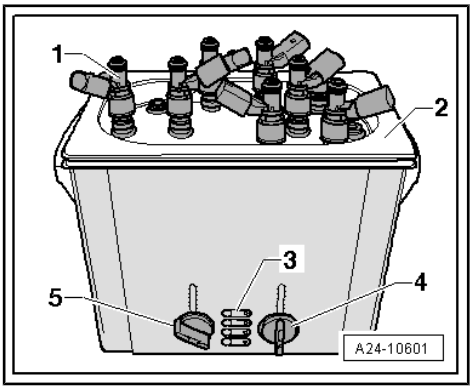

Note

The time set starts to elapse as soon as a cleaning temperature of 50°C has been reached.

- Install injectors with new combustion chamber seal ⇒ page 253 .

5 Senders and sensors

⇒ “5.1 Removing and installing fuel pressure sender G247 / G624 ”, page 262

⇒ “5.2 Removing and installing air mass meter”, page 262

⇒ “5.3 Removing and installing fuel pressure sender for low pressure G410 ”, page 263

5.1 Removing and installing fuel pressure sender -G247- / -G624-

Removing

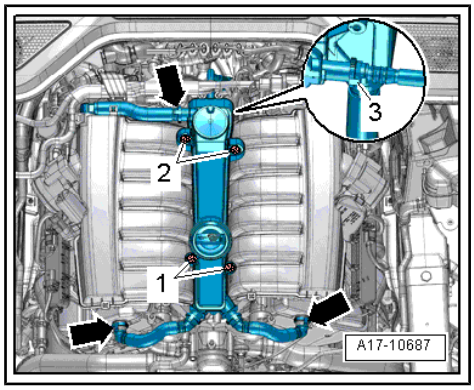

- Remove engine cover panel ⇒ page 62 .
- Remove bolts -1- and ball studs -2-.
- Press release tabs and disconnect crankcase breather hoses -arrows-.
- Press release tabs and detach housing for oil filler neck to disconnect hose -3-.

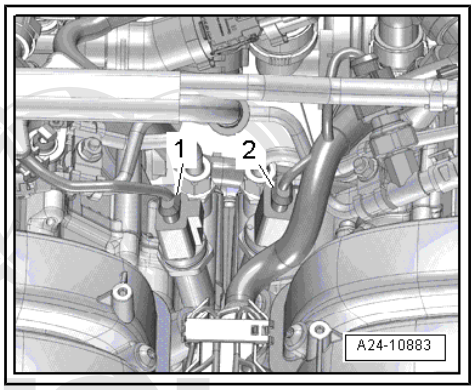

- Unplug electrical connector -1- for fuel pressure sender - G247- and connector -2- for fuel pressure sender 2 - G624- .
- Unscrew relevant fuel pressure sender.

Installing

Installation is carried out in the reverse order; note the following:

- Install housing for oil filler neck ⇒ page 179 .
- Install engine cover panel ⇒ page 62 .

Tightening torques

♦ ⇒ “4.1 Exploded view - fuel rail with injectors”, page 252

5.2 Removing and installing air mass meter

Protected by copyright. Copying for private or commercial purposes, in part or in whole, is not permitted unless authorised by AUDI AG. AUDI AG does not guarantee or accept any liability with respect to the correctness of information in this document. Copyright by AUDI AG.

Note

The following description shows the removal and installation of the air mass meter - G70- on cylinder bank 1 (right-side); the procedure for the other side is similar.

Removing

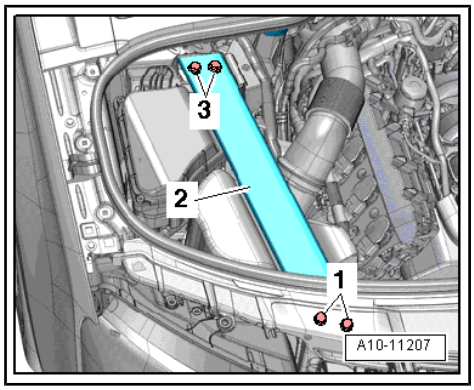

- Remove longitudinal member (top right) -2- ⇒ General body repairs, exterior; Rep. gr. 50 ; Lock carrier; Exploded view - lock carrier .

– Unplug electrical connector -1-.

– Unscrew bolts -arrows- and detach air mass meter - G70- .

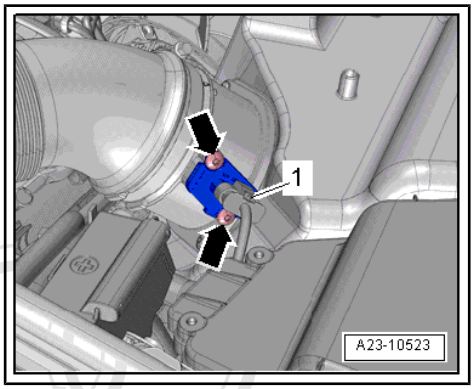

Installing

To ensure that the air mass meter functions properly, it is important to observe the following notes and instructions.

Note

If the air filter element is very dirty or wet, dirt or water could reach the air mass meter and affect the air mass value. This would lead to loss of power, since a smaller injection quantity is calculated.

The remaining installation steps are carried out in the reverse sequence.

Tightening torques

- ⇒ “2.1 Exploded view - air cleaner housing”, page 244
- Upper longitudinal member ⇒ General body repairs, exterior; Rep. gr. 50 ; Lock carrier; Exploded view - lock carrier

Protected by copyright. Copying for private or commercial purposes, in part or in whole, is not permitted unless authorised by AUDI AG. AUDI AG does not guarantee or accept any liability with respect to the correctness of information in this document. Copyright by AUDI AG.

5.3 Removing and installing fuel pressure sender for low pressure - G410-

Removing

Caution

Risk of damage caused by particles of dirt.

- *Observe rules for cleanliness ⇒ page 8 .*

– Remove engine cover panel ⇒ page 62 .

– Unplug electrical connector -3-.

– Unscrew fuel pressure sender for low pressure - G410- -item 2-; to do so, counterhold at fuel supply line -1-.

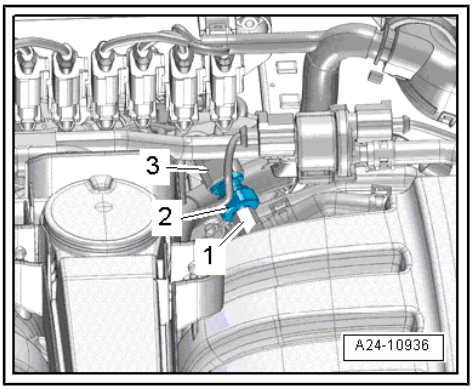

Installing

Installation is carried out in the reverse order; note the following:

– Check fuel system for leaks ⇒ page 242 .

– Install engine cover panel ⇒ page 62 .

Tightening torques

- ⇒ “6.1 Exploded view - high-pressure pump”, page 264

6 High-pressure pump

⇒ "6.1 Exploded view - high-pressure pump", page 264
⇒ "6.2 Removing and installing high-pressure pump", page 265
⇒ "6.3 Removing and installing high-pressure pipe", page 270

6.1 Exploded view - high-pressure pump

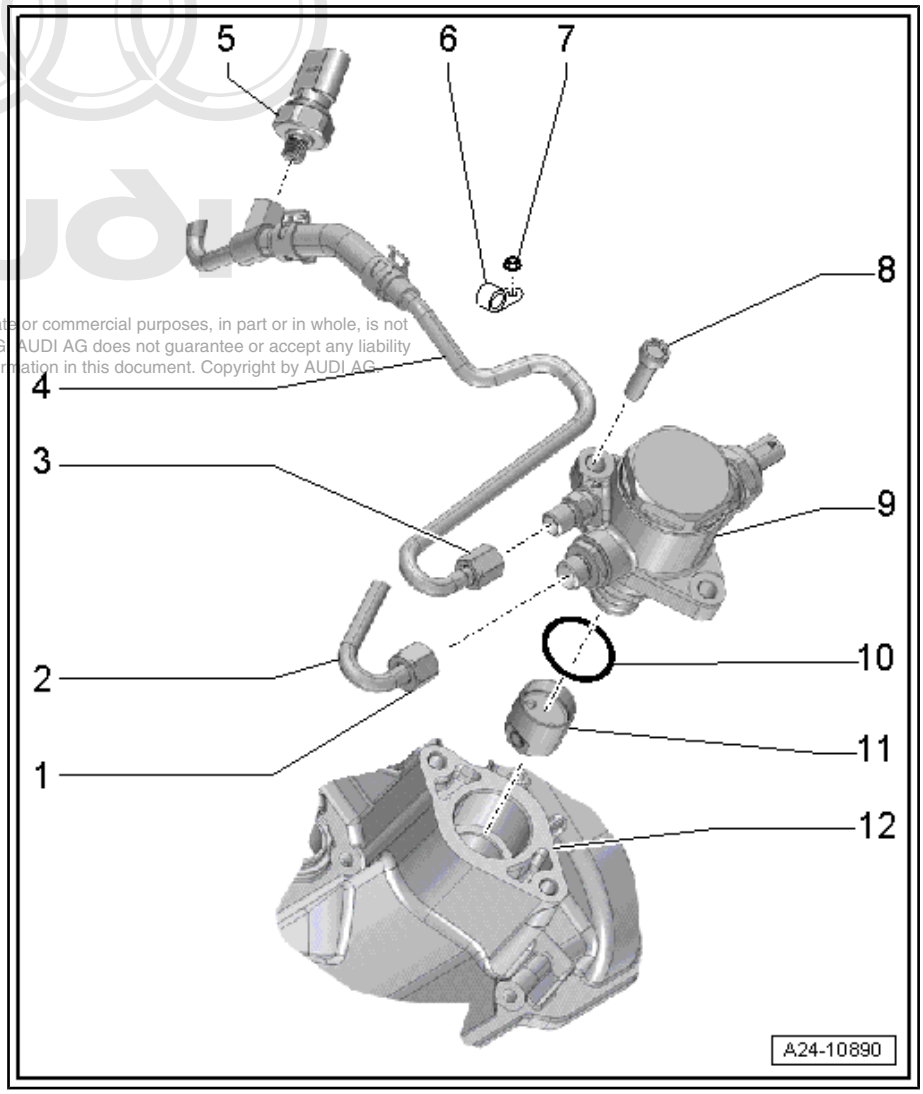

Protected by copyright. Copying for private or commercial purposes, in part or in whole, is not permitted unless authorised by AUDI AG. AUDI AG does not guarantee or accept any liability with respect to the correctness of information in this document. Copyright by AUDI AG.

1 - Union nut

- ❑ Connections must not be damaged
- ❑ 27 Nm

2 - High-pressure pipe

> ⚠ **WARNING**
> *The fuel system operates at extremely high pressure. This can cause injury.*
> *The fuel pressure in the high-pressure section of the injection system must be reduced to a residual pressure prior to opening the system ⇒ page 241 .*

- ❑ Removing and installing ⇒ page 270
- ❑ Do not alter shape

3 - Union nut

- ❑ Connections must not be damaged
- ❑ Lubricate thread lightly with fuel
- ❑ 22 Nm

4 - Fuel supply line

5 - Fuel pressure sender for low pressure - G410-

- ❑ Removing and installing ⇒ page 263
- ❑ 15 Nm

6 - Retaining clamp

7 - Nut

- ❑ 9 Nm

8 - Bolt

- ❑ Tightening torque and sequence ⇒ page 265

9 - High-pressure pump

- ❑ Right side (cylinder bank 1) with fuel metering valve - N290-
- ❑ Left side (cylinder bank 2) with fuel metering valve 2 - N402-
- ❑ Removing and installing ⇒ page 265
- ❑ Tighten connection for high-pressure pipe to high-pressure pump to 30 Nm

10 - O-ring

- ❑ Renew
- ❑ Lubricate lightly with clean engine oil before installing

11 - Roller tappet

- ❑ Can only be installed in one position
- ❑ Lubricate lightly with clean engine oil before installing

12 - Cylinder head cover

High-pressure pump - tightening torque and sequence

– Tighten bolts in stages as follows:

Stage	Bolts	Tightening torque
1.	-arrows-	Screw in by hand until contact is made
2.	-arrows-	5 Nm
3.	-arrows-	Tighten in stages and alternately; final torque 20 Nm

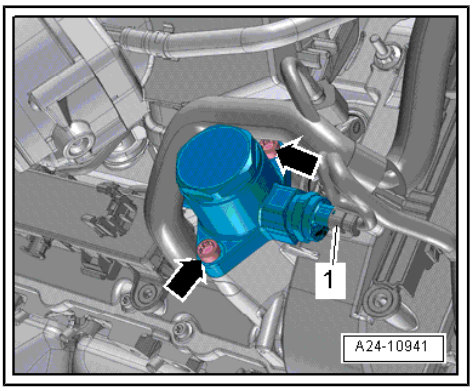

6.2 Removing and installing high-pressure pump

⇒ "6.2.1 Removing and installing high-pressure pump (left-side)", page 265

⇒ "6.2.2 Removing and installing high-pressure pump (right-side)", page 268

6.2.1 Removing and installing high-pressure pump (left-side)

Special tools and workshop equipment required

♦ Counterhold tool - T10172- with pins -T10172/1-

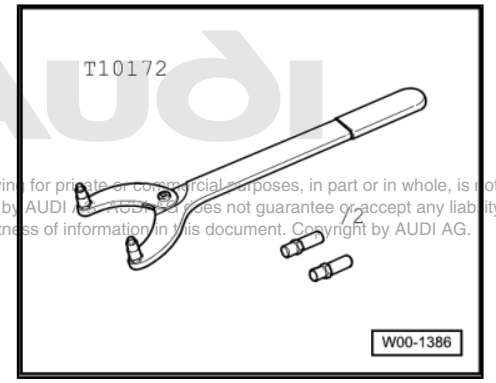

Protected by copyright. Copying for private or commercial purposes, in part or in whole, is not permitted unless authorised by AUDI AG. AUDI AG does not guarantee or accept any liability with respect to the correctness of information in this document. Copyright by AUDI AG.

Removing

– Remove engine cover panel ⇒ page 62 .

WARNING

The fuel system operates at extremely high pressure. This can cause injury.

- *The fuel pressure in the high-pressure section of the injection system must be reduced to a residual pressure prior to opening the system* ⇒ page 241 .

– Remove bolt -arrow- and detach bracket -1-.

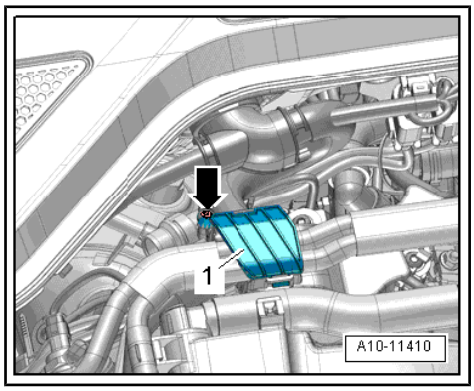

– Release hose clips -arrows- and detach hoses.
– Move clear vacuum pipe -1- and swivel to left side.

Caution

Risk of damage caused by particles of dirt.

- *Observe rules for cleanliness* ⇒ page 8 .

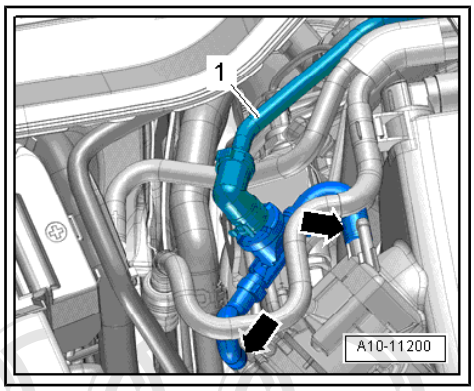

– Remove nuts -arrows- and union nuts -2-.
– Remove bolts -arrows-.

Note

Disregard -item 1-.

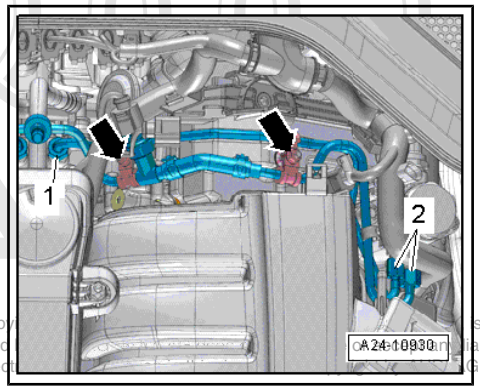

Protected by copyright. Copy
permitted unless authorised
with respect to the correc
s not
ability
G.

– Unplug electrical connector -1-.
– Remove bolts -arrows-.
– Carefully pull out high-pressure pump. It is possible that the roller tappet may remain lodged inside.

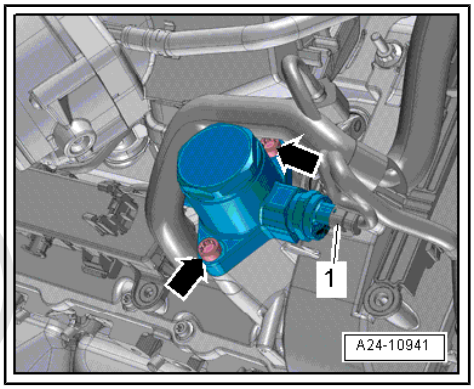

Note

Do not attempt to bend high-pressure pipe to a different shape.

Installing

Installation is carried out in the reverse order; note the following:

Note

- *Fit new O-ring.*
- *The connections of the high-pressure pipe must not be damaged.*
- *Do not attempt to bend high-pressure pipe to a different shape.*

Protected by copyright. Copying for private or commercial purposes, in part or in whole, is not permitted unless authorised by AUDI AG. AUDI AG does not guarantee or accept any liability with respect to the correctness of information in this document. Copyright by AUDI AG.

– Check roller tappet -1- for damage and renew if necessary.
– Lightly lubricate roller tappet with oil and insert it so that lug -arrow A- slides into guide notch -arrow B-.

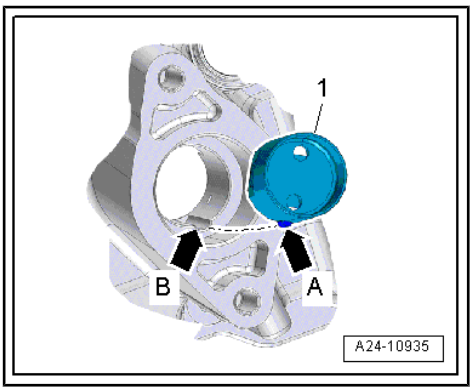

Note

The roller tappet must be positioned at the lowest point when installing the high-pressure pump.

– Remove noise insulation (front) -1- ⇒ General body repairs, exterior; Rep. gr. 66 ; Noise insulation; Removing and installing noise insulation .

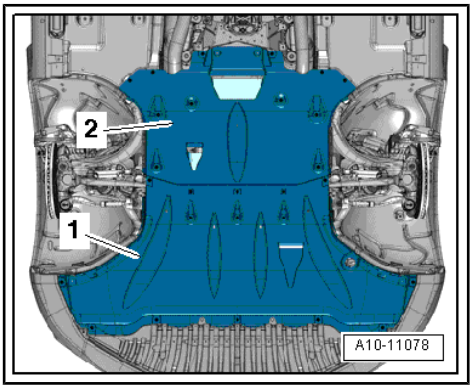

– Rotate crankshaft in direction of engine rotation -arrow- using counterhold tool - T10172- with pins -T10172/1- , and at the same time press roller tappet into cylinder head until it reaches its lowest point.
– Insert high-pressure pump into housing.
– Press high-pressure pump down by hand as far as possible onto stop.

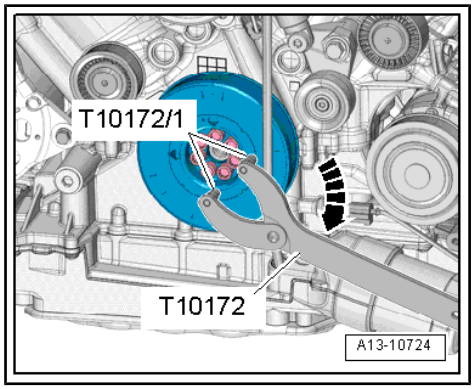

– Hand-tighten the bolts -arrows- as far as the flange.
– Tighten bolts; for procedure refer to ⇒ page 265 .

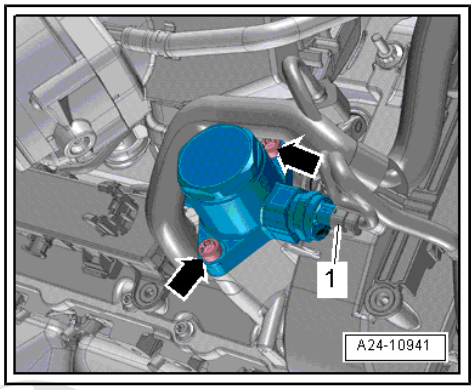

Note

The pump can be damaged if it is tightened too much on one side (keep it straight).

– Install high-pressure pipe ⇒ page 270 .
– Install engine cover panel ⇒ page 62 .
– Check fuel system for leaks ⇒ page 242 .

Tightening torques

♦ ⇒ “6.1 Exploded view - high-pressure pump”, page 264
♦ ⇒ General body repairs, exterior; Rep. gr. 66 ; Noise insulation; Exploded view - noise insulation

6.2.2 Removing and installing high-pressure pump (right-side)

Special tools and workshop equipment required

♦ Counterhold tool - T10172- with pins -T10172/1-

Protected by copyright. Copying for private or commercial purposes, in part or in whole, is not permitted unless authorised by AUDI AG. AUDI AG does not guarantee or accept any liability with respect to the correctness of information in this document. Copyright by AUDI AG.

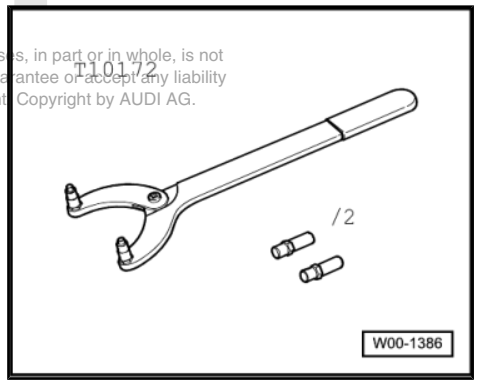

Removing

WARNING

The fuel system operates at extremely high pressure. This can cause injury.

- *The fuel pressure in the high-pressure section of the injection system must be reduced to a residual pressure prior to opening the system* ⇒ page 241 .

– Remove high-pressure pipe (right-side) ⇒ page 270 .
– Unplug electrical connector -1-.
– Remove bolts -arrows-.
– Carefully pull out high-pressure pump. It is possible that the roller tappet may remain lodged inside.

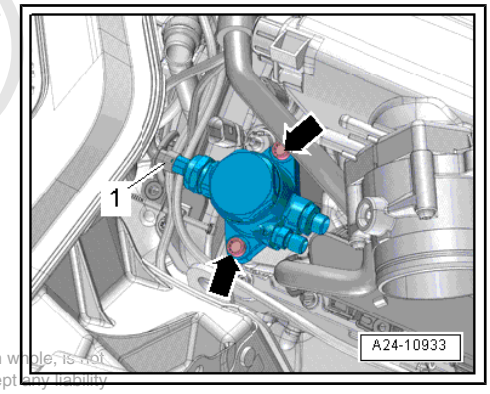

Note

Do not attempt to bend high-pressure pipe to a different shape.

Installing

Protected by copyright. Copying for private or commercial purposes, in part or in whole, is not permitted unless authorised by AUDI AG. AUDI AG does not guarantee or accept any liability with respect to the correctness of information in this document. Copyright by AUDI AG.

Installation is carried out in the reverse order; note the following:

Note

- *Fit new O-ring.*
- *The connections of the high-pressure pipe must not be damaged.*
- *Do not attempt to bend high-pressure pipe to a different shape.*

– Check roller tappet -1- for damage and renew if necessary.
– Lightly lubricate roller tappet with oil and insert it so that lug -arrow A- slides into guide notch -arrow B-.

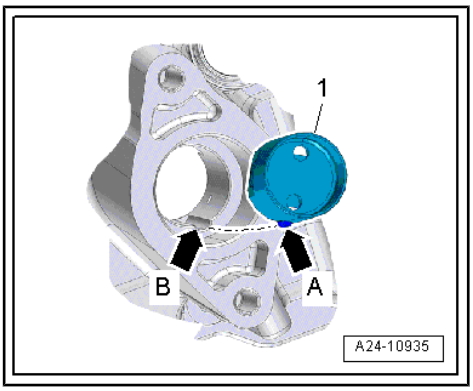

Note

The roller tappet must be positioned at the lowest point when installing the high-pressure pump.

– Remove noise insulation (front) -1- ⇒ General body repairs, exterior; Rep. gr. 66 ; Noise insulation; Removing and installing noise insulation .

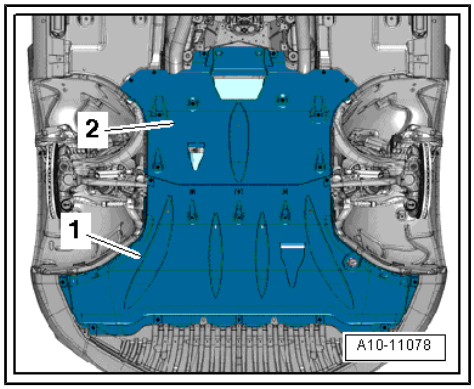

– Rotate crankshaft in direction of engine rotation -arrow- using counterhold tool - T10172- with pins -T10172/1- , and at the same time press roller tappet into cylinder head until it reaches its lowest point.
– Insert high-pressure pump into housing.
– Press high-pressure pump down by hand as far as possible onto stop.

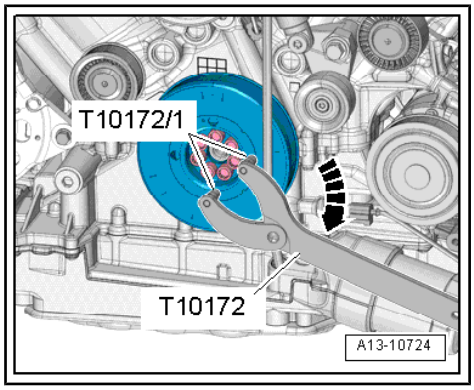

– Hand-tighten the bolts -arrows- as far as the flange.
– Tighten bolts; for procedure refer to ⇒ page 265 .

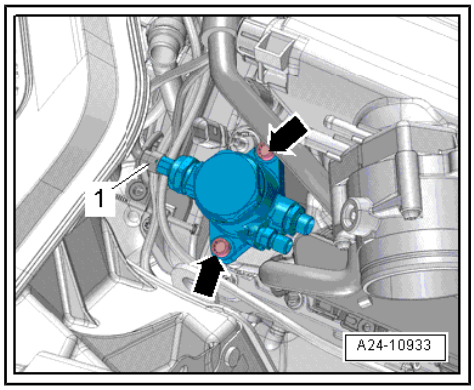

Note

The pump can be damaged if it is tightened too much on one side (keep it straight).

– Install high-pressure pipe ⇒ page 270 .
– Check fuel system for leaks ⇒ page 242 .

Tightening torques

♦ ⇒ “6.1 Exploded view - high-pressure pump”, page 264
♦ ⇒ General body repairs, exterior; Rep. gr. 66 ; Noise insulation; Exploded view - noise insulation

6.3 Removing and installing high-pressure pipe

Special tools and workshop equipment required

Protected by copyright. Copying for private or commercial purposes, in part or in whole, is not permitted unless authorised by AUDI AG. AUDI AG does not guarantee or accept any liability with respect to the correctness of information in this document. Copyright by AUDI AG.

- Open-end spanner insert, 17 mm - V.A.G 1331/6- or crow-foot ring spanner, 17 mm (commercially available)

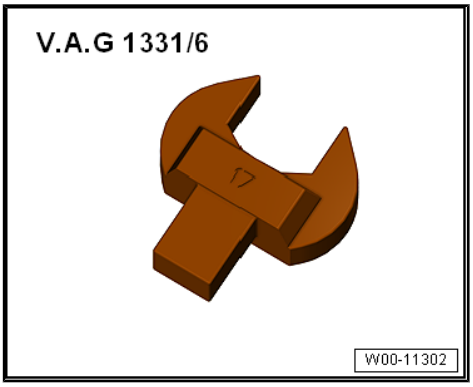

- Socket - T40055-

Protected by copyright. Copying for private or commercial purposes, in part or in whole, is not permitted unless authorised by AUDI AG. AUDI AG does not guarantee or accept any liability with respect to the correctness of information in this document. Copyright by AUDI AG.

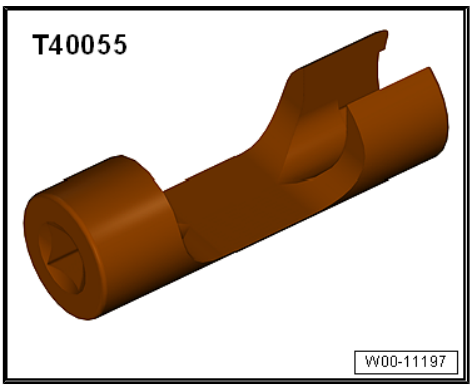

- Flared ring spanner tool insert, 14 mm - V.A.G 1331/8- or crow-foot ring spanner, 14 mm (commercially available)

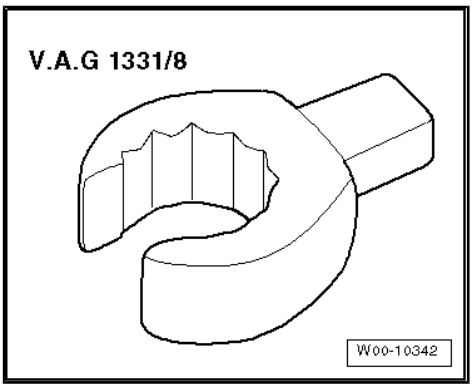

Removing

– Remove engine cover panel ⇒ page 62 .

WARNING

The fuel system operates at extremely high pressure. This can cause injury.

- *The fuel pressure in the high-pressure section of the injection system must be reduced to a residual pressure prior to opening the system* *⇒ page 241* *.*

– Remove bolt -arrow- and detach bracket -1-.

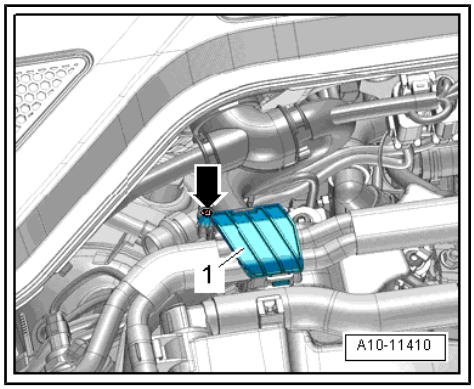

– Release hose clips -arrows- and detach hoses.
– Move clear vacuum pipe -1- and swivel to left side.

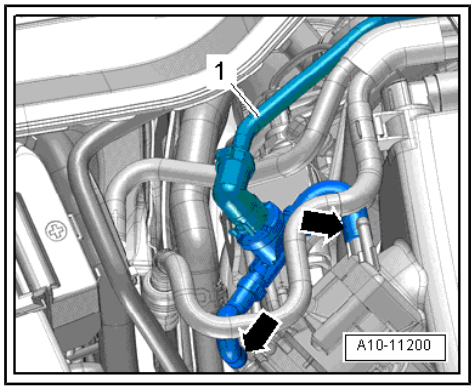

> ⚠ **Caution**
>
> ***Risk of damage caused by particles of dirt.***
>
> ♦ ***Observe rules for cleanliness*** ⇒ page 8 .

Protected by copyright. Copying for private or commercial purposes, in part or in whole, is not permitted unless authorised by AUDI AG. AUDI AG does not guarantee or accept any liability with respect to the correctness of information in this document. Copyright by AUDI AG.

High-pressure pipe (right-side):

– Remove throttle valve module - J338- ⇒ page 250 .
– Push down protective sleeve -1- and disconnect fuel line.

– First press hose connector -2- downwards -arrow A-, then press release tabs -arrow B-.
– Pull off hose connector, keeping release tabs depressed.
– Release hose clip -3- and detach hose for activated charcoal filter.
– Move clear hoses and push to left side.

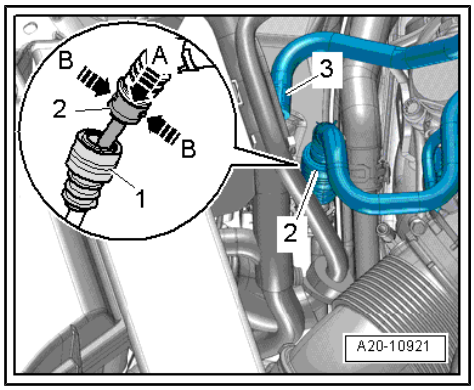

– Remove bolts -arrows- and push bracket -1- slightly to one side.

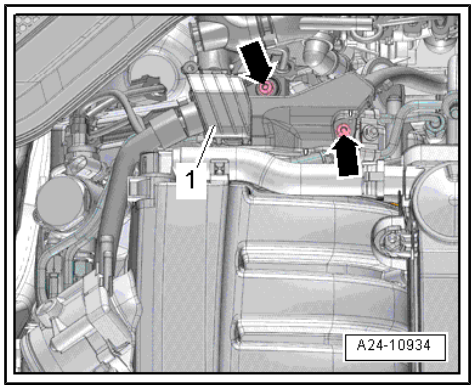

– Remove nuts -arrows-.

– Remove union nuts -1 and 2- and detach high-pressure pipe (right-side).

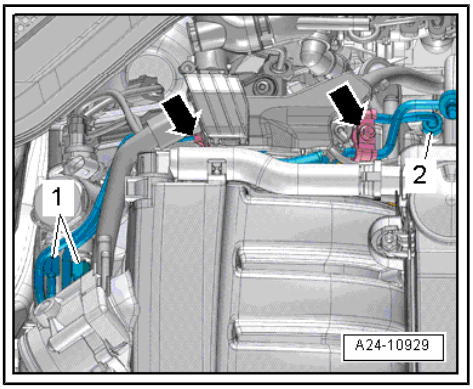

High-pressure pipe (left-side):

– Remove nuts -arrows-.

– Remove union nuts -1 and 2- and detach high-pressure pipe (left-side).

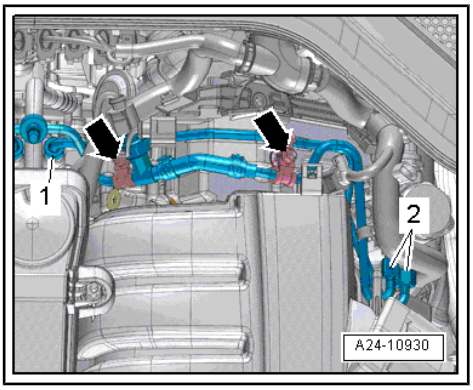

Installing

Note

♦ *The connections of the high-pressure pipe must not be damaged.*

♦ *Do not attempt to bend high-pressure pipe to a different shape.*

– Tighten connection for high-pressure pipe to high-pressure pump ⇒ Item 9 (page 264) .

– First tighten union nut by hand until it makes contact, making sure that high-pressure pipe is not under tension.

Protected by copyright. Copying for private or commercial purposes, in part or in whole, is not permitted unless authorised by AUDI AG. AUDI AG does not guarantee or accept any liability with respect to the correctness and completeness of this document. Copyright by AUDI AG.

– Tighten union nut with torque wrench - V.A.G 1331- and open-end spanner insert, 17 mm - V.A.G 1331/8- or crow-foot ring spanner, 17 mm; to do so, counterhold at hexagon flats of threaded connection on fuel rail with an open-end spanner.

– Tighten union nut with torque wrench - V.A.G 1331- and flared ring spanner tool insert, 14 mm - V.A.G 1331/8- or crow-foot ring spanner, 14 mm; to do so, counterhold at hexagon flats of threaded connection on fuel rail with an open-end spanner.

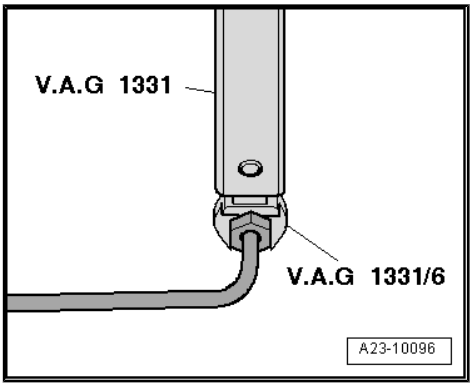

– Do not tighten bolt for retainer until high-pressure pipe has been tightened.

– Install throttle valve module - J338- ⇒ page 250 .

– Install engine cover panel ⇒ page 62 .

Tightening torques

♦ ⇒ “6.1 Exploded view - high-pressure pump”, page 264

7 Lambda probe

⇒ “7.1 Exploded view - Lambda probe”, page 274

⇒ “7.2 Removing and installing Lambda probe”, page 275

7.1 Exploded view - Lambda probe

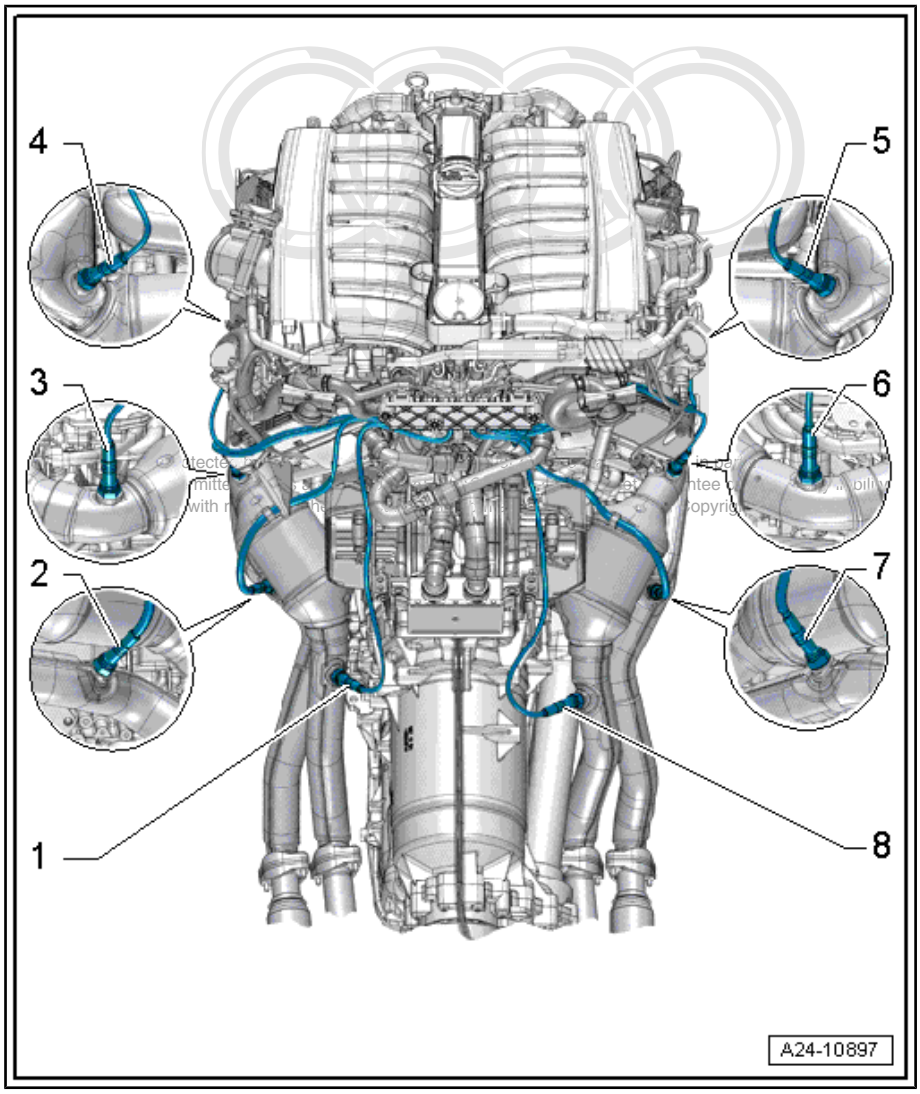

1 - Lambda probe 4 after catalytic converter - G288-

- With Lambda probe 4 heater after catalytic converter - Z65-
- Removing and installing ⇒ page 278
- 52 Nm

2 - Lambda probe 3 after catalytic converter - G287-

- With Lambda probe 3 heater after catalytic converter - Z64-
- Removing and installing ⇒ page 278
- 52 Nm

3 - Lambda probe 4 - G286- (before catalytic converter)

- With Lambda probe heater 4 - Z63-
- Removing and installing ⇒ page 276
- 52 Nm

4 - Lambda probe 3 - G285- (before catalytic converter)

- With Lambda probe heater 3 - Z62-
- Removing and installing ⇒ page 276
- 52 Nm

5 - Lambda probe - G39- (before catalytic converter)

- With Lambda probe heater - Z19-
- Removing and installing ⇒ page 275
- 52 Nm

6 - Lambda probe 2 - G108- (before catalytic converter)

- With Lambda probe heater 2 - Z28-
- Removing and installing ⇒ page 275
- 52 Nm

7 - Lambda probe after catalytic converter - G130-

- With Lambda probe 1 heater after catalytic converter - Z29-
- Removing and installing ⇒ page 278
- 52 Nm

8 - Lambda probe 2 after catalytic converter - G131-

- With Lambda probe 2 heater after catalytic converter - Z30-

- ❑ Removing and installing ⇒ page 278
- ❑ 52 Nm

7.2 Removing and installing Lambda probe

⇒ "7.2.1 Removing and installing Lambda probe G39 / G108 ", page 275

⇒ "7.2.2 Removing and installing Lambda probe G285 / G286 ", page 276

⇒ "7.2.3 Removing and installing Lambda probe after catalytic converter G130 / G131 / G287 / G288 ", page 278

7.2.1 Removing and installing Lambda probe -G39- / -G108-

Special tools and workshop equipment required

- ♦ Lambda probe open ring spanner set - 3337-

Protected by copyright. Copying for private or commercial purposes, in part or in whole, is not permitted unless authorised by AUDI AG. AUDI AG does not guarantee or accept any liability with respect to the correctness of information in this document. Copyright by AUDI AG.

Removing

Note

All cable ties which are released or cut open when removing must be fitted in the same position when installing.

– Remove air cleaner housing (right-side) ⇒ page 245 .

– Detach electrical connectors from bracket, unplug and move electrical wires clear:

1 - Lambda probe - G39-

2 - Lambda probe 2 - G108-

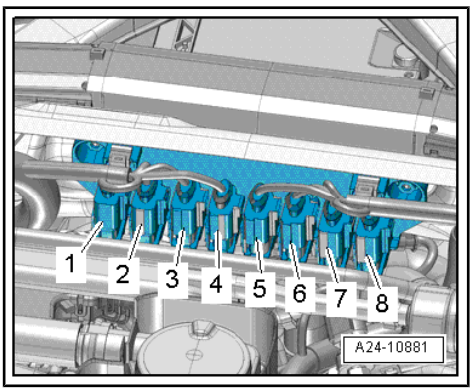

Note

Disregard -items 3 to 8-.

– Unscrew Lambda probe - G39- -4- using tool from Lambda probe open ring spanner set - 3337- .

– Unscrew Lambda probe 2 - G108- -3- using tool from Lambda probe open ring spanner set - 3337- .

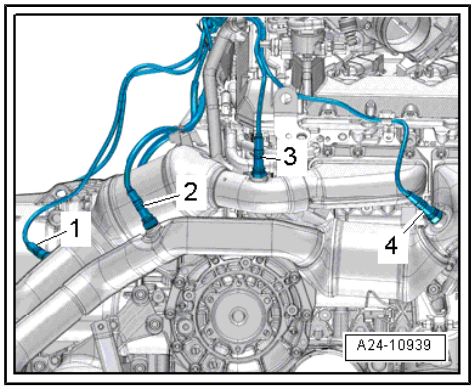

Note

- *Disregard -items 1 and 2-.*
- *For illustration purposes, the installation position is shown with the engine removed.*

Installing

Installation is carried out in the reverse order; note the following:

Protected by copyright. Copying for private or commercial purposes, in part or in whole, is not permitted unless authorised by AUDI AG. AUDI AG does not guarantee or accept any liability with respect to the correctness of information in this document. Copyright by AUDI AG.

Note

- *Threads of new Lambda probes are already coated with assembly paste; the paste must not get into the slots on the probe body.*
- *In the case of a used Lambda probe grease only the thread with high-temperature paste. The paste must not get into the slots on the Lambda probe body. High-temperature paste ⇒ Parts catalogue*
- *When installing, the Lambda probe wire must always be reattached at the same locations to prevent it from coming into contact with the exhaust pipe.*
- *Fit all cable ties in the original positions when installing.*

– Install air cleaner housing ⇒ page 245 .

Tightening torques

- ⇒ “7.1 Exploded view - Lambda probe”, page 274

7.2.2 Removing and installing Lambda probe -G285- / -G286-

Special tools and workshop equipment required

- Lambda probe open ring spanner set - 3337-

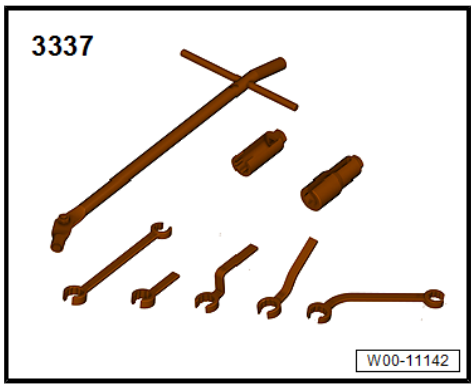

Removing

Note

All cable ties which are released or cut open when removing must be fitted in the same position when installing.

– Detach electrical connectors from bracket, unplug and move electrical wires clear:

7 - For Lambda probe 3 - G285-

8 - For Lambda probe 4 - G286-

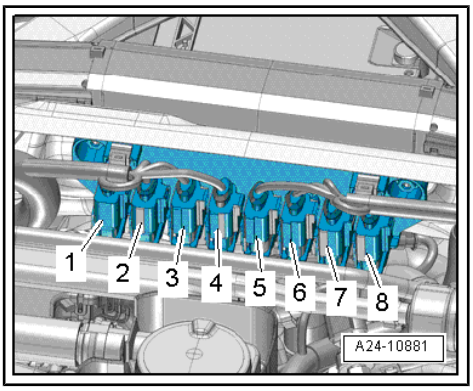

Note

Disregard items -1 ... 6-.

Lambda probe 3 - G285- :

– Remove air cleaner housing (right-side) ⇒ page 245 .

Lambda probe 4 - G286- :

– Detach vacuum hose -1- at plenum chamber partition panel, move clear at clip -arrow- and push to one side.

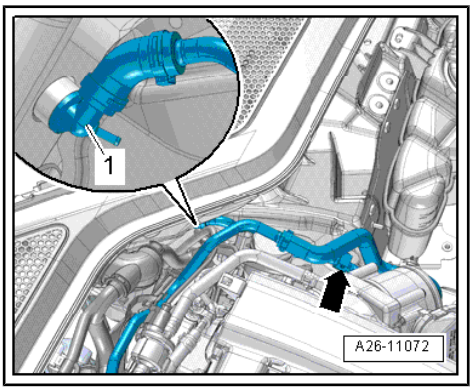

Protected by copyright. Copying for private or commercial purposes, in part or in whole, is not permitted unless authorised by AUDI AG. AUDI AG does not guarantee or accept any liability with respect to the correctness of information in this document. Copyright by AUDI AG.

Continuation for both Lambda probes:

– Unscrew Lambda probe 3 - G285- -1- using tool from Lambda probe open ring spanner set - 3337- .

– Unscrew Lambda probe 4 - G286- -2- using tool from Lambda probe open ring spanner set - 3337- .

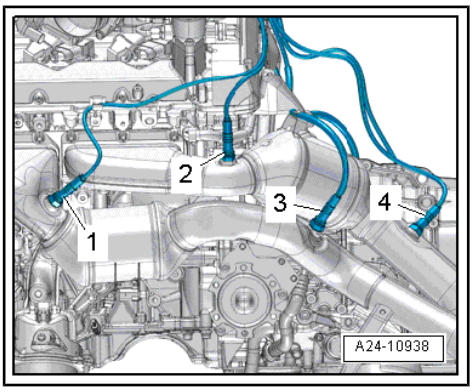

Note

- *Disregard -items 3 and 4-.*
- *For illustration purposes, the installation position is shown with the engine removed.*

Installing

Installation is carried out in the reverse order; note the following:

– Install air cleaner housing ⇒ page 245 .

Tightening torques

- ⇒ “7.1 Exploded view - Lambda probe”, page 274

7.2.3 Removing and installing Lambda probe after catalytic converter -G130- / -G131- / -G287- / -G288-

Special tools and workshop equipment required

- Lambda probe open ring spanner set - 3337-

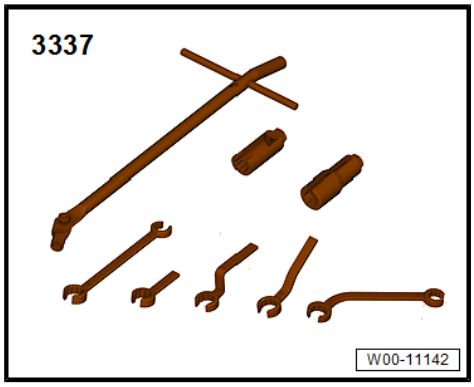

Removing

Note

All cable ties which are released or cut open when removing must be fitted in the same position when installing.

– Remove secondary air pumps -V101- / -V189- ⇒ page 296 .

– Remove bolt -1- for coolant pipe on gearbox (rear right).

– Remove bolts -arrows- on both sides and detach brackets for secondary air pumps.

Protected by copyright. Copying for private or commercial purposes, in part or in whole, is not permitted unless authorised by AUDI AG. AUDI AG does not guarantee or assume liability with respect to the correctness of information in this document.

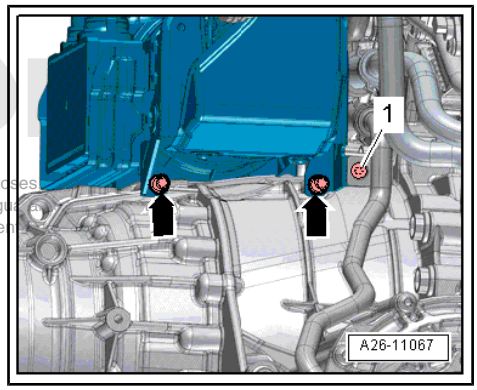

– Detach electrical connectors from bracket, unplug and move electrical wires clear:

3 - For Lambda probe after catalytic converter - G130-

4 - For Lambda probe 2 - G131- (after catalytic converter)

5 - For Lambda probe 3 - G287- (after catalytic converter)

6 - For Lambda probe 4 - G288- (after catalytic converter)

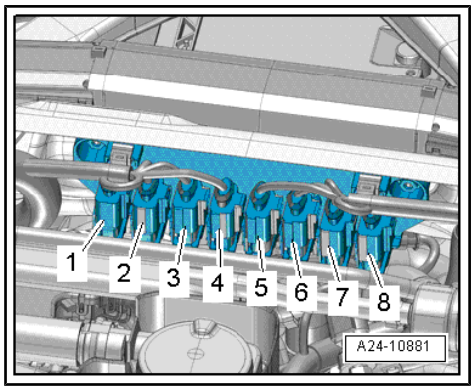

– Unscrew Lambda probe after catalytic converter - G130- -2- using tool from Lambda probe open ring spanner set - 3337- .

– Unscrew Lambda probe 2 after catalytic converter - G131- -1- using tool from Lambda probe open ring spanner set - 3337- .

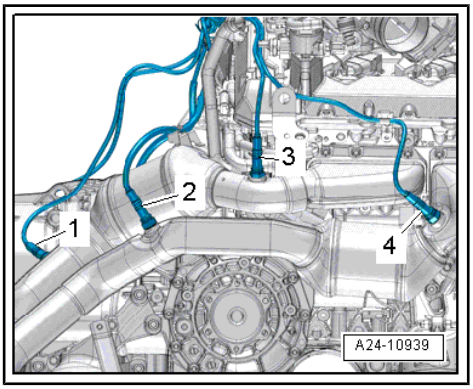

Note

- *Disregard -items 3 and 4-.*
- *For illustration purposes, the installation position is shown with the engine removed.*

– Unscrew Lambda probe 3 after catalytic converter - G287- -3- using tool from Lambda probe open ring spanner set - 3337- .

– Unscrew Lambda probe 4 after catalytic converter - G288- -4- using tool from Lambda probe open ring spanner set - 3337- .

– Unscrew Lambda probe 4 after catalytic converter - G288- -item 4- with ring spanner -3337/1- .

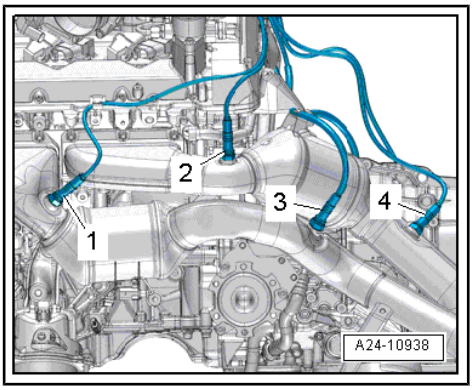

Note

- *Disregard -items 1 and 2-.*
- *For illustration purposes, the installation position is shown with the engine removed.*

Installing

Installation is carried out in the reverse order; note the following:

Note

- *Threads of new Lambda probes are already coated with assembly paste; the paste must not get into the slots on the probe body.*
- *In the case of a used Lambda probe grease only the thread with high-temperature paste. The paste must not get into the slots on the Lambda probe body. High-temperature paste ⇒ Parts catalogue*
- *When installing, the Lambda probe wire must always be reattached at the same locations to prevent it from coming into contact with the exhaust pipe.*
- *Fit all cable ties in the original positions when installing.*

Protected by copyright. Copying for private or commercial purposes, in part or in whole, is not permitted unless authorised by AUDI AG. AUDI AG does not guarantee or accept any liability with respect to the correctness of information in this document. Copyright by AUDI AG.

– Install secondary air pumps -V101- / -V189- ⇒ page 296 .

Tightening torques

- ⇒ “7.1 Exploded view - Lambda probe”, page 274

8 Engine control unit

⇒ “8.1 Wiring and component check”, page 280

⇒ “8.2 Removing and installing engine control unit J623 / J624 ”, page 282

8.1 Wiring and component check

Special tools and workshop equipment required

- Adapter cable - V.A.G 1598/39-1-
- Adapter cable - V.A.G 1598/39-2-
- Test box - V.A.G 1598/42-

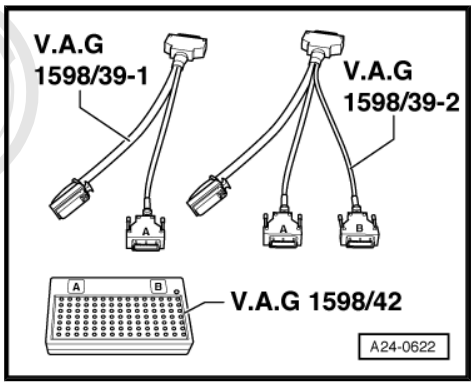

Protected by copyright. Copying for private or commercial purposes, in part or in whole, is not permitted unless authorised by AUDI AG. AUDI AG does not guarantee or accept any liability with respect to the correctness of information in this document. Copyright by AUDI AG.

- ⇒ Vehicle diagnostic tester

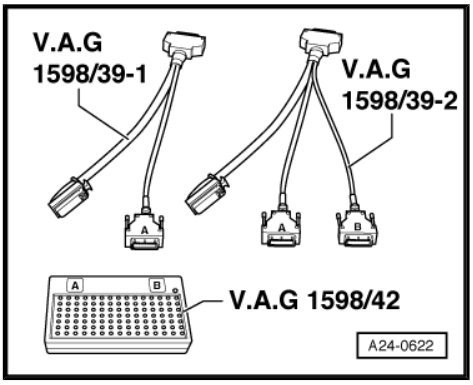

Note

- *The test box - V.A.G 1598/42- has 105 sockets. It can be connected to the engine control unit via 2 different adapter cables.*
- *The engine control unit is connected to the vehicle's wiring harness via two connectors, one of which has 60 pins, the other has 94 pins.*
- *To carry out tests on the 60-pin wiring harness connector, the adapter cable - V.A.G 1598/39-1- is connected to connector -A- on the test box. For components connected to 60-pin wiring harness connector ⇒ Current flow diagrams, Electrical fault finding and Fitting locations.*
- *To carry out tests on the 94-pin wiring harness connector, the adapter cable - V.A.G 1598/39-2- must be connected to connectors -A- and -B- on the test box. For components connected to 94-pin wiring harness connector ⇒ Current flow diagrams, Electrical fault finding and Fitting locations.*
- *The test box - V.A.G 1598/42- is designed so it can be connected both to the wiring harness for the engine control unit and to the engine control unit itself at the same time. The advantage of this is that the electronic engine control system remains fully functional when the test box is connected (for example, for measuring signals when the engine is running).*
- *Always use auxiliary measuring set - V.A.G 1527B- to connect test equipment (e.g. voltage tester - V.A.G 1526E- , hand-held multimeter - V.A.G 1594C- etc.).*

The engine control unit has to be removed before connectors can be unplugged from engine control unit ⇒ page 282 .

Caution

Electronic components are susceptible to damage.

- ***Select the appropriate measuring range before connecting the test leads and observe test requirements.***

– Remove engine control unit ⇒ page 282 .
– Connect test box - V.A.G 1598/42- to wiring harness connector. The earth clip on the test box must be connected to the negative battery terminal. The instructions for performing the individual tests indicate whether or not the engine control unit itself also needs to be connected to the test box.
– Carry out test as described in appropriate repair procedures.

Installing engine control unit

Installation is performed in the reverse sequence.

Protected by copyright. Copying for private or commercial purposes, in part or in whole, is not permitted unless authorised by AUDI AG. AUDI AG does not guarantee or accept any liability with respect to the correctness of information in this document. Copyright by AUDI AG.

The procedure required after connecting the new engine control unit is described in the Guided Fault Finding or Guided Functions. Use ⇒ Vehicle diagnostic tester.

Note

After completion of the Guided Fault Finding routine, the ⇒ Vehicle diagnostic tester will attempt to erase the event memories of all control units. If this is not successful, the remaining events saved in the memories must be dealt with so that all event memory entries can be erased.

8.2 Removing and installing engine control unit -J623- / -J624-

- Electronic engine control for the 12-cylinder engine is handled by two engine control units.
- The two engine control units communicate via a separate CAN bus.
- Engine control unit - J623- (master control unit) informs engine control unit 2 - J624- (slave control unit) which functions it has to perform.

Removing

– When renewing engine control unit, select diagnosis object “Replace engine control unit” in “Guided Functions” mode of ⇒ Vehicle diagnostic tester.

– Switch off ignition and remove ignition key.

– Remove plenum chamber cover -2- ⇒ General body repairs, exterior; Rep. gr. 50 ; Bulkhead; Removing and installing plenum chamber cover .

Protected by copyright. Copying fo
permitted unless authorised by A
with respect to the correctness

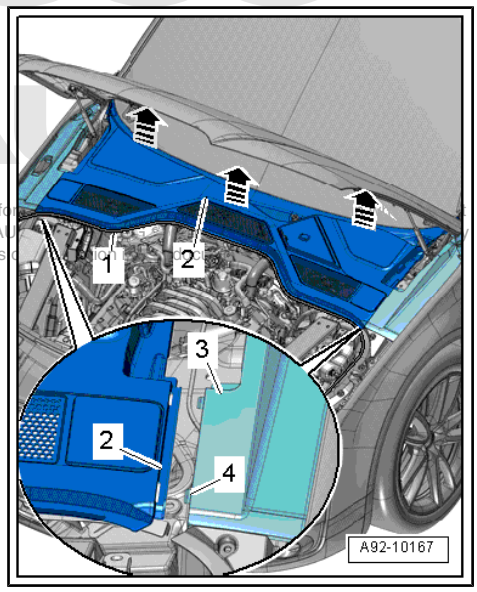

Engine control unit 2 - J624- :

– Release catches -arrows-, detach engine control unit 2 - J624- and move clear electrical wiring harness.

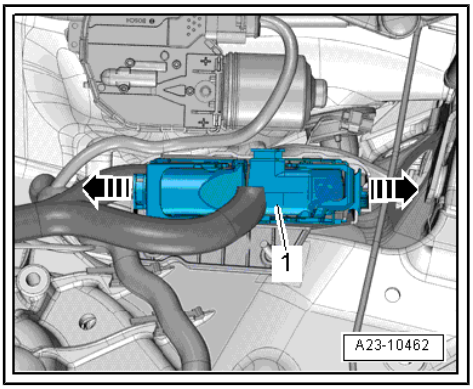

Engine control unit - J623- :

– Remove body brace ⇒ Running gear, axles, steering; Rep. gr. 40 ; Suspension strut, upper links; Removing and installing body brace .

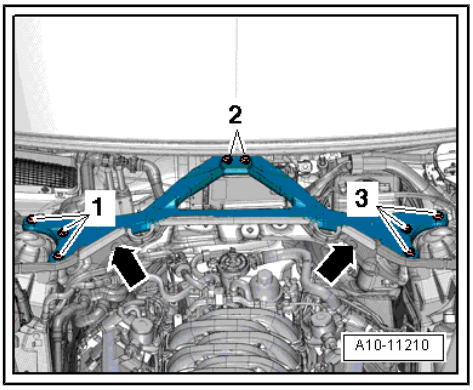

– Release clips -arrows- and take out engine control unit - J623- -2-.

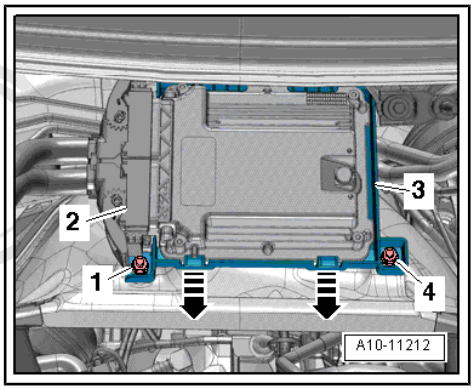

Note

Disregard -items 1, 3, 4-.

– Release connectors on engine control unit - J623- and unplug connectors.

Installing

Installation is carried out in the reverse order; note the following:

– Install plenum chamber cover ⇒ General body repairs, exterior; Rep. gr. 50 ; Bulkhead; Removing and installing plenum chamber cover .

Protected by copyright. Copying for private or commercial purposes, in part or in whole, is not permitted unless authorised by AUDI AG. AUDI AG does not guarantee or accept any liability with respect to the correctness of information. Copyright by AUDI AG.

The procedure required after connecting the new engine control unit is described in the Guided Fault Finding or Guided Functions. Use ⇒ Vehicle diagnostic tester.

Tightening torques

♦ Body brace ⇒ Running gear, axles, steering; Rep. gr. 40 ; Suspension strut, upper links; Exploded view - suspension strut, upper links

26 – Exhaust system

1 Exhaust pipes/silencers

⇒ “1.1 Exploded view - silencers”, page 284

⇒ “1.2 Separating exhaust pipes/silencers”, page 286

⇒ “1.3 Removing and installing front silencers”, page 287

⇒ “1.5 Stress-free alignment of exhaust system”, page 289

⇒ “1.6 Checking exhaust system for leaks”, page 290

⇒ “1.7 Checking vacuum unit for exhaust flap”, page 290

⇒ “1.8 Removing and installing exhaust flap control unit J883 / J945 ”, page 291

1.1 Exploded view - silencers

Note

The illustration shows the left part of the exhaust system.

1 - Centre silencer

- Combined in one unit with rear silencers as original equipment. Can be renewed individually for repair purposes
- Cutting point ⇒ page 286
- Align exhaust system so it is free of stress ⇒ page 289

2 - Rubber mounting

3 - Bolt

- 23 Nm

4 - Mounting

- Renew if damaged
- Check preload ⇒ “1.5 Stress-free alignment of exhaust system”, page 289

5 - Nut

- 23 Nm

6 - Front silencer

- With flexible joint; do not bend flexible joint more than 15° – otherwise it can be damaged
- Removing and installing ⇒ page 287
- Align exhaust system so it is free of stress ⇒ page 289

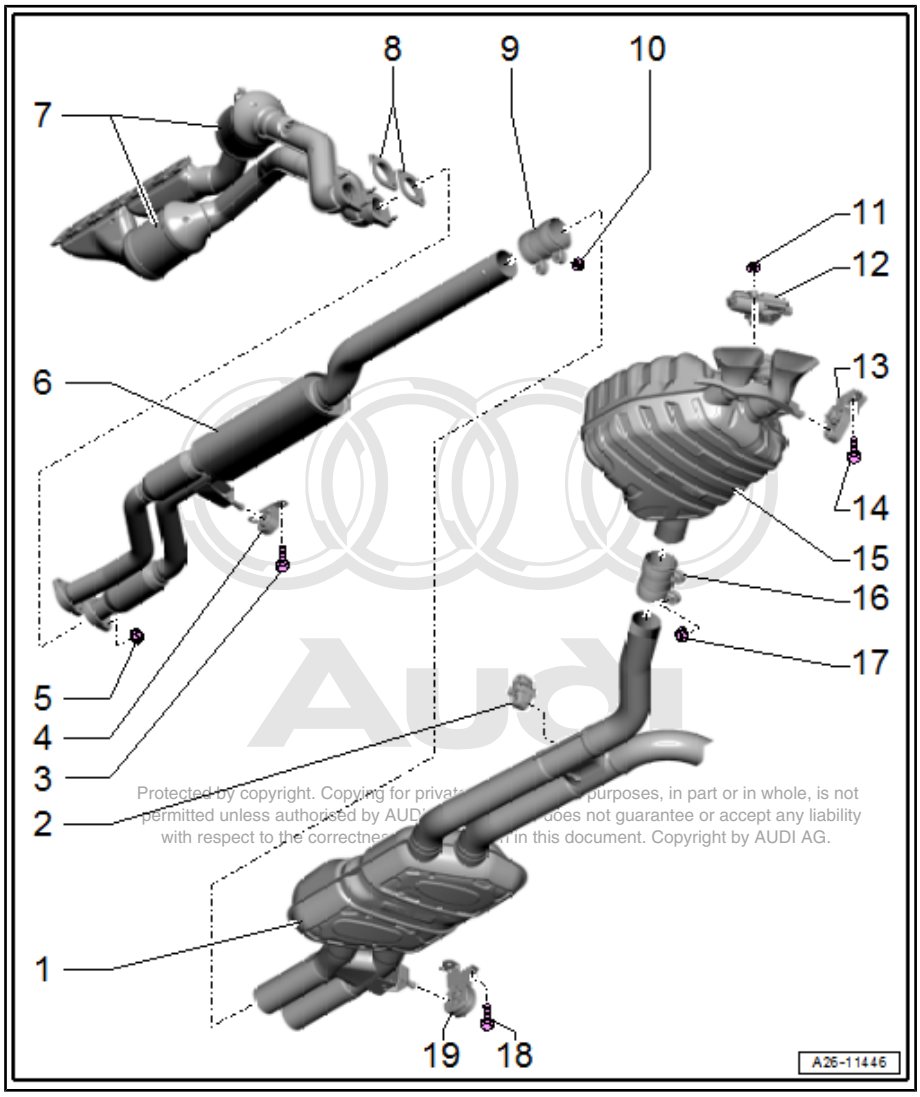

Protected by copyright. Copying for private purposes, in part or in whole, is not permitted unless authorised by AUDI AG. AUDI AG does not guarantee or accept any liability with respect to the correctness of information in this document. Copyright by AUDI AG.

7 - Catalytic converters

- ❑ Protect against knocks and impact
- ❑ Removing and installing: left-side
  ⇒ "3.3.1 Removing and installing exhaust manifold (rear left)", page 303 and
  ⇒ "3.3.2 Removing and installing exhaust manifold (front left)", page 307 , right-side
  ⇒ "3.3.3 Removing and installing exhaust manifolds (right-side)", page 310

8 - Gaskets

- ❑ Renew

9 - Clamp (front)

- ❑ Installation position ⇒ page 286
- ❑ Before tightening, align exhaust system so it is free of stress ⇒ page 289
- ❑ Tighten bolt connections evenly

10 - Nut

- ❑ 23 Nm

11 - Nut

- ❑ For vehicles from model year 2014 onwards
- ❑ 3 Nm

12 - Exhaust flap control unit

- ❑ For vehicles from model year 2014 onwards
- ❑ On left side: exhaust flap control unit 2 - J945- , on right side: exhaust flap control unit - J883-
- ❑ Removing and installing ⇒ page 291

13 - Mounting

- ❑ Renew if damaged
- ❑ Check preload ⇒ "1.5 Stress-free alignment of exhaust system", page 289

14 - Bolt

- ❑ 23 Nm

15 - Rear silencer

- ❑ Combined as one unit with centre silencer and tailpipes as original equipment
- ❑ Centre silencer and rear silencer can be renewed separately
- ❑ Cutting point: centre silencer / rear silencer ⇒ page 286
- ❑ Align exhaust system so it is free of stress ⇒ page 289

16 - Clamp (rear)

- ❑ For separate replacement of centre and rear silencers
- ❑ Installation position ⇒ page 286
- ❑ Before tightening, align exhaust system so it is free of stress ⇒ page 289
- ❑ Tighten bolt connections evenly

Protected by copyright. Copying for private or commercial purposes, in part or in whole, is not permitted unless authorised by AUDI AG. AUDI AG does not guarantee or accept any liability with respect to the correctness of information in this document. Copyright by AUDI AG.

17 - Nut

- ❑ Renew
- ❑ 20 Nm

18 - Bolt

- ❑ 23 Nm

19 - Mounting

- ❑ Renew if damaged
- ❑ Check preload ⇒ "1.5 Stress-free alignment of exhaust system", page 289

Installation position of front clamps

– Install clamps so that the bolt ends do not protrude beyond bottom of clamp.

• Installation position: bolt connections face outwards.

• Angle -α- = 45°

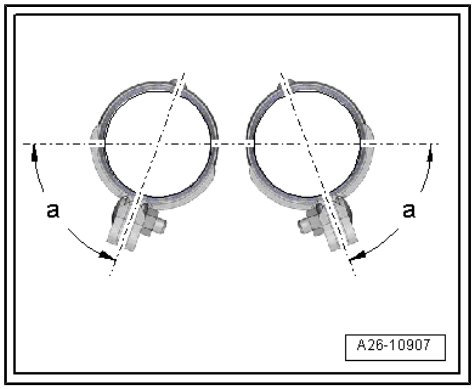

Installation position of rear clamps

– Install clamps so that the bolt ends do not protrude beyond bottom of clamp.

• Installation position: bolt connections face forwards.

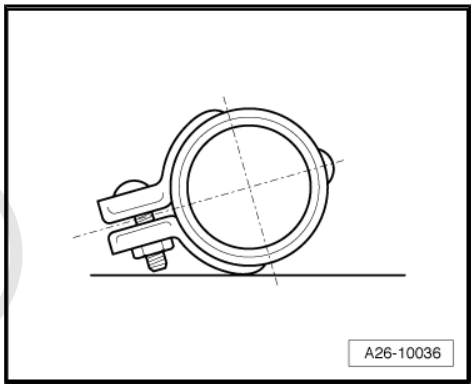

1.2 Separating exhaust pipes/silencers

♦ The connecting pipe can be cut through at the cutting location in order to renew the centre or rear silencer separately.

♦ The cutting point is marked by an indentation on the circumference of the exhaust pipe.

Protected by copyright. Copying for private or commercial purposes, in part or in whole, is not permitted unauthorised by AUDI AG. AUDI AG does not guarantee or accept any liability with respect to the correctness of information in this document. Copyright by AUDI AG.

Special tools and workshop equipment required

♦ Chain pipe cutter - VAS 6254-

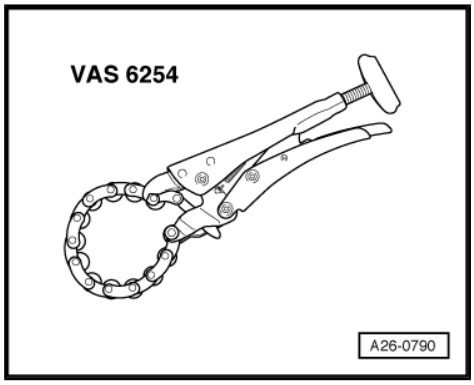

Procedure

– Cut through exhaust pipes at right angle at the position marked -arrows- using chain pipe cutter - VAS 6254- .

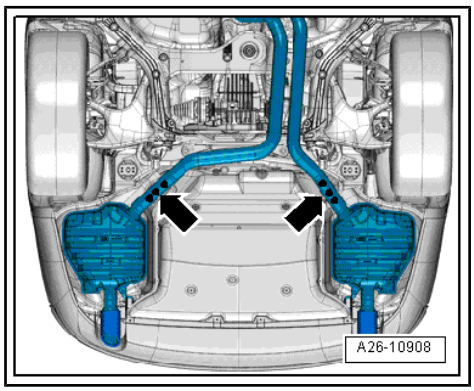

– Position centre of clamps -arrows- over cutting location.

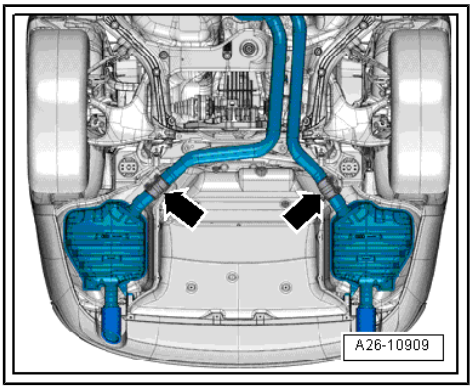

– Install clamps so that the bolt ends do not protrude beyond bottom of clamp.

• Installation position: bolt connections face forwards.

– Align the exhaust system so it is free of stress ⇒ page 289 .

Tightening torques

♦ ⇒ “1.1 Exploded view - silencers”, page 284

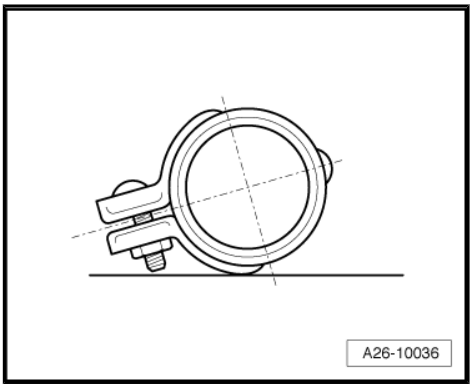

1.3 Removing and installing front silencers

Removing

Front silencer (left-side):

– Remove nuts -1- and bolts -2-.

Front silencer (right-side):

– Remove nuts -4- and bolts -3-.

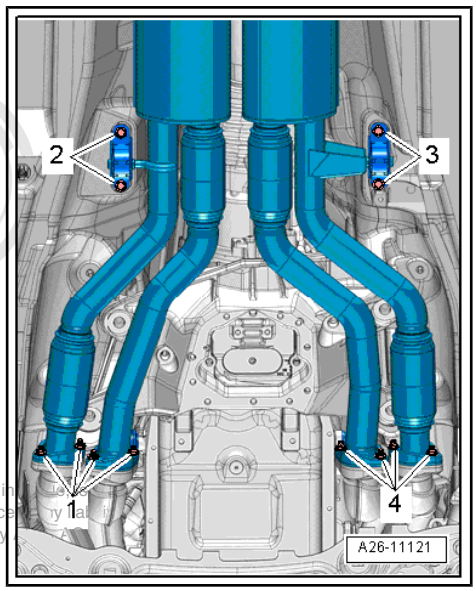

Protected by copyright. Copying for private or commercial purposes, in part or in
permitted unless authorised by AUDI AG. AUDI AG does not guarantee or acce
with respect to the correctness of information in this document. Copyright by

– Remove tunnel cross-piece -1- ⇒ General body repairs, exterior; Rep. gr. 66 ; Underbody trim; Removing and installing tunnel cross-piece .

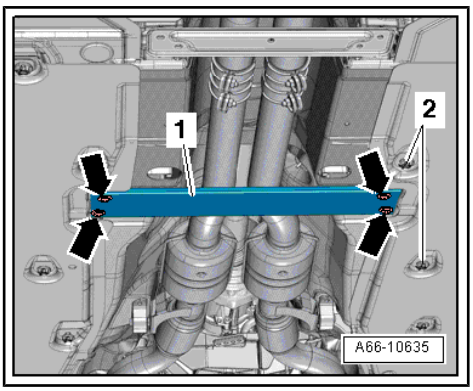

Continuation for both sides:

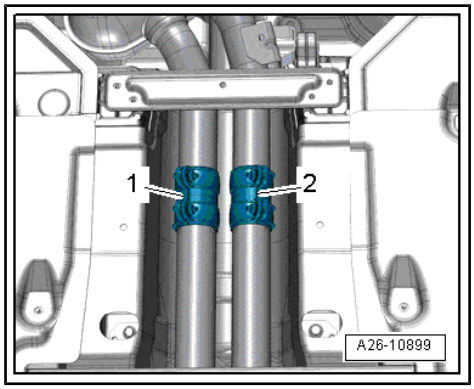

Caution

Avoid damage to flexible joint.

- *Do not bend flexible joint more than 15°.*
- *Install flexible joint so that it is not under tension.*
- *Take care not to damage wire mesh on flexible joint.*

– Release and push back clamp -1- or -2- and detach relevant front silencer.

Installing

Installation is carried out in the reverse order; note the following:

Note

Renew gaskets and self-locking nuts.

– Align the exhaust system so it is free of stress ⇒ page 289 .

Tightening torques

- ⇒ “1.1 Exploded view - silencers”, page 284
- Tunnel cross-piece ⇒ General body repairs, exterior; Rep. gr. 66 ; Underbody trim; Exploded view - underbody trim

1.4 Removing and installing silencers

Removing

– Remove tunnel cross-piece -1- ⇒ General body repairs, exterior; Rep. gr. 66 ; Underbody trim; Removing and installing tunnel cross-piece .

Protected by copyright. Copying for private or commercia
permitted unless authorised by AUDI AG. AUDI AG does
with respect to the correctness of information in this do

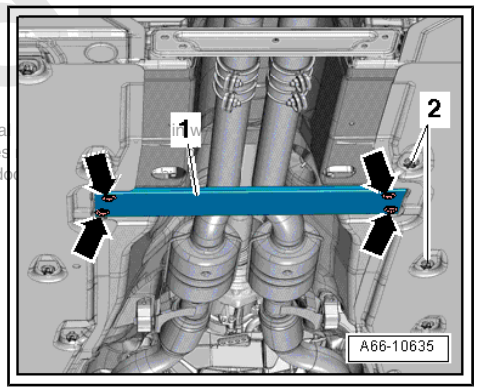

– Loosen clamps -1- and push to rear.

> ⚠ **WARNING**
>
> *Risk of accident caused by weight of silencers.*
>
> ♦ *A second mechanic is required for removal of the silencers.*

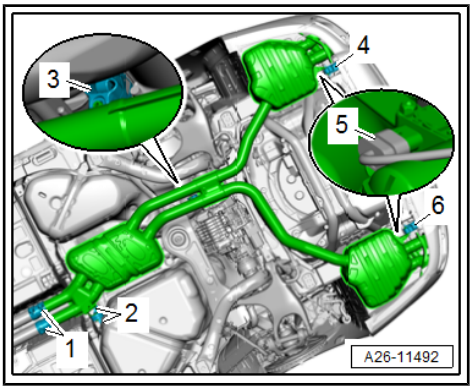

– Disengage rubber mounting -3-.

Vehicles up to model year 2013:

– Detach hose (left and right) from vacuum unit for exhaust flap on rear silencer.

Vehicles from model year 2014 onwards:

– Unplug electrical connectors (left and right) -5- at exhaust flap control unit.

All vehicles (continued):

– Unscrew bolts -2, 4, 6- and remove silencers.

Installing

Installation is carried out in the reverse order; note the following:

– Align the exhaust system so it is free of stress ⇒ page 289 .

Tightening torques

♦ ⇒ “1.1 Exploded view - silencers”, page 284

♦ Tunnel cross-piece ⇒ General body repairs, exterior; Rep. gr. 66 ; Underbody trim; Exploded view - underbody trim

1.5 Stress-free alignment of exhaust system

Procedure

• The exhaust system must be aligned when it is cool.

Vehicles without clamps between centre silencer and rear silencers

– Loosen bolt connections on front clamps.

– Push exhaust system towards front of vehicle -arrow- until mountings in front of centre silencer are preloaded by -a- = 6 ... 10 mm.

– Tighten bolt connections on clamps evenly.

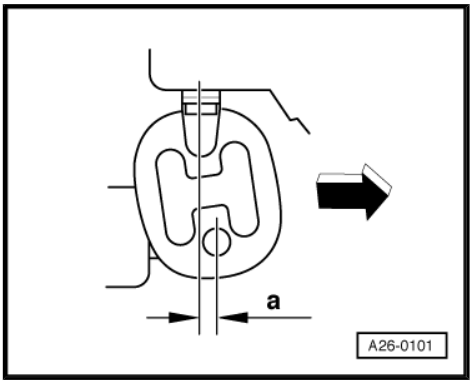

Protected by copyright. Copying for private or commercial purposes, in part or in whole, is not permitted unless authorised by AUDI AG. AUDI AG does not guarantee or accept any liability with respect to the correctness of information in this document. Copyright by AUDI AG.

Vehicles with clamps between centre silencer and rear silencers

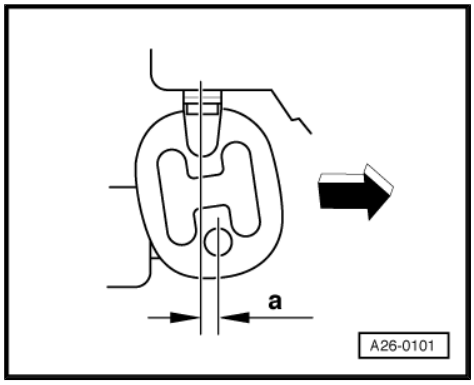

Note

On a vehicle with clamps fitted between the centre silencer and rear silencers, it is also necessary to align the centre silencer.

- Loosen bolt connections on front and rear clamps.
- Push exhaust system towards front of vehicle -arrow- until mountings in front of centre silencer are preloaded by -a- = 6 ... 10 mm.
- Tighten bolt connections on front clamps evenly.

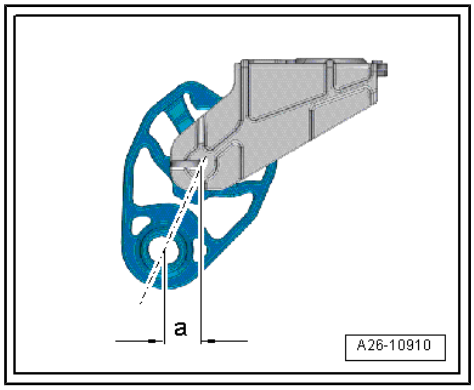

- Push rear section of exhaust system towards front of vehicle -arrow-, so that mountings (rear) for rear silencers are preloaded by -a- = 11 ... 15 mm.
- Align rear silencers so they are horizontal.
- Tighten bolt connections on rear clamps evenly.

Tightening torques

♦ ⇒ “1.1 Exploded view - silencers”, page 284

1.6 Checking exhaust system for leaks

- Start the engine and run at idling speed.
- Plug tailpipes during leak test (e.g. with cloth or plugs).
- Listen for noise at connections between cylinder head/exhaust manifold, exhaust manifold/front exhaust pipe, etc. to locate any leaks.
- Rectify any leaks that are found.

1.7 Checking vacuum unit for exhaust flap

Special tools and workshop equipment required

♦ Hand vacuum pump - VAS 6213-

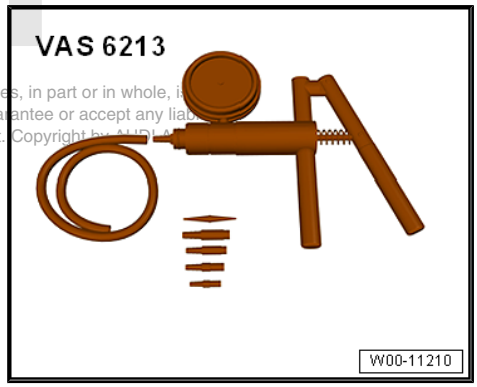

Protected by copyright. Copying for private or commercial purposes, in part or in whole, is not permitted unless authorised by AUDI AG. AUDI AG does not guarantee or accept any liability with respect to the correctness of information in this document. Copyright by AUDI AG

Procedure

– Detach hose from vacuum unit for exhaust flap on rear silencer.

– Connect hand vacuum pump - VAS 6213- to vacuum unit.

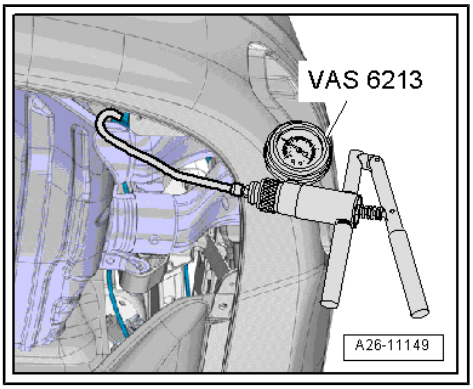

– Operate hand vacuum pump.

• The linkage should move upwards.

– Vent vacuum pump.

• The linkage should move.

– If linkage does not move, check linkage for ease of movement and check vacuum unit for leaks.

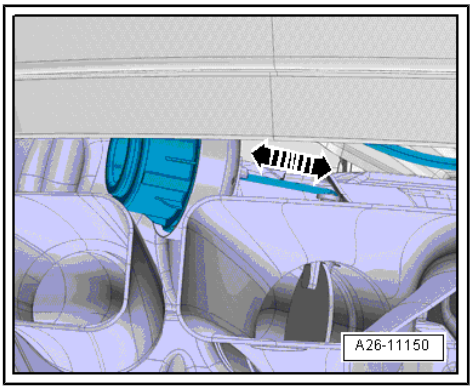

1.8 Removing and installing exhaust flap control unit -J883- / -J945-

Note

The following instructions describe the removal and installation procedures for the exhaust flap control unit on the left side. The procedure for the right side is similar.

Removing

– Remove silencer ⇒ page 288 .

– Lower rear exhaust system -4-.

– Remove nuts -2- and detach exhaust flap control unit -1-.

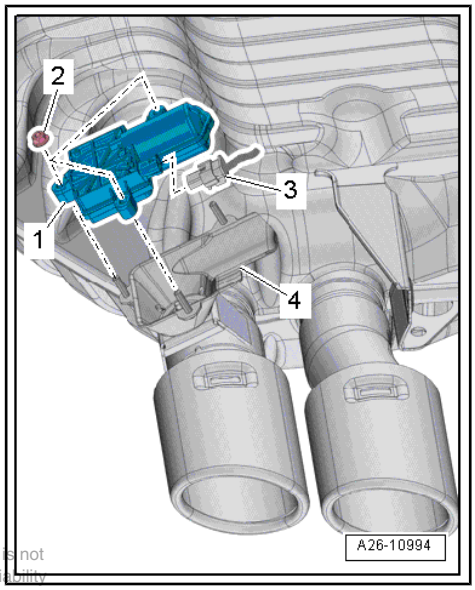

Note

Disregard -item 3-.

Installing

Installation is carried out in the reverse order; note the following:

Note

Renew the nuts.

Protected by copyright. Copying for private or commercial purposes, in part or in whole, is not permitted unless authorised by AUDI AG. AUDI AG does not guarantee or accept any liability with respect to the correctness of information in this document. Copyright by AUDI AG.

– Move exhaust flap control unit into installation position.

• Spring -2- must engage in grooves -arrows- on exhaust flap -1-.

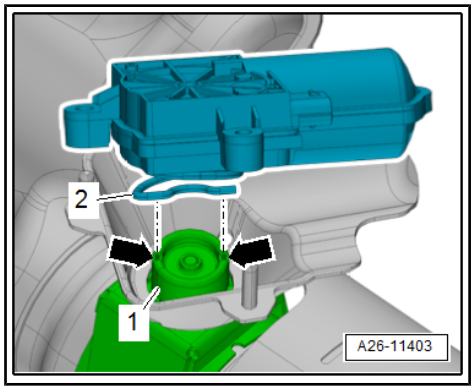

Tightening torques

◆ ⇒ “1.1 Exploded view - silencers”, page 284

Protected by copyright. Copying for private or commercial purposes, in part or in whole, is not permitted unless authorised by AUDI AG. AUDI AG does not guarantee or accept any liability with respect to the correctness of information in this document. Copyright by AUDI AG.

2 Secondary air system

⇒ "2.1 Exploded view - secondary air system", page 293

⇒ "2.2 Removing and installing secondary air pump motor V101 / V189 ", page 296

⇒ "2.3 Checking combination valve", page 296

⇒ "2.4 Removing and installing combination valve", page 298

⇒ "2.5 Removing and installing senders for secondary air pressure G609 / G610 ", page 298

2.1 Exploded view - secondary air system

Secondary air system

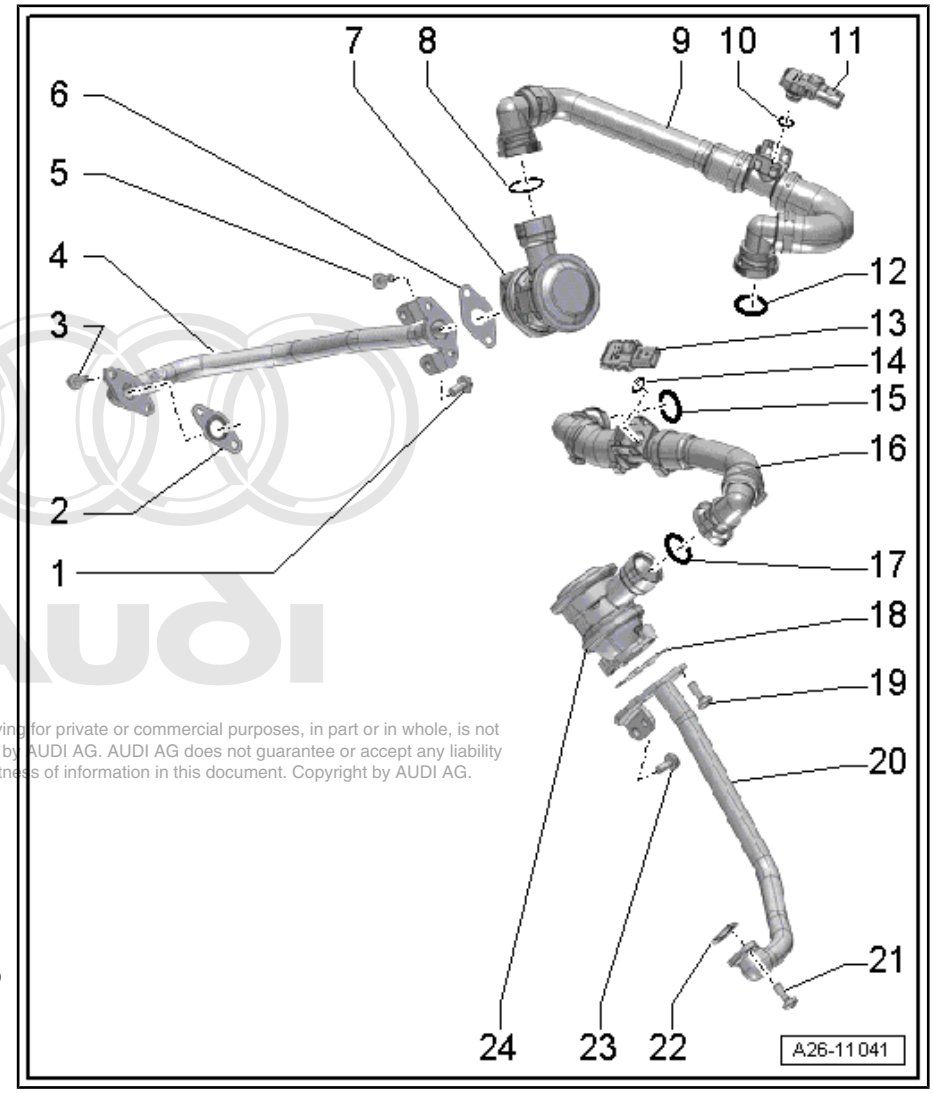

1 - Bolt
- ❑ Renew
- ❑ 4 Nm + turn 45° further

2 - Gasket
- ❑ Renew

3 - Bolt
- ❑ 8 Nm

4 - Pipe
- ❑ For secondary air

5 - Bolt
- ❑ 8 Nm

6 - Gasket
- ❑ Renew

7 - Combination valve for secondary air system (left-side)
- ❑ Fitting location: at rear of cylinder head
- ❑ Checking ⇒ page 296
- ❑ Removing and installing ⇒ page 298

8 - O-ring
- ❑ Renew

9 - Hose
- ❑ For secondary air
- ❑ From secondary air pump motor 2 - V189- to combination valve (left-side) for secondary air system

10 - O-ring
- ❑ Renew

11 - Sender 2 for secondary air pressure - G610-
- ❑ Removing and installing ⇒ page 298

12 - O-ring
- ❑ Renew

Protected by copyright. Copying for private or commercial purposes, in part or in whole, is not permitted unless authorised by AUDI AG. AUDI AG does not guarantee or accept any liability with respect to the correctness of information in this document. Copyright by AUDI AG.

13 - Sender 1 for secondary air pressure - G609-

- ❑ Removing and installing ⇒ page 298

14 - O-ring

- ❑ Renew

15 - O-ring

- ❑ Renew

16 - Hose

- ❑ For secondary air
- ❑ From secondary air pump motor - V101- to combination valve (right-side) for secondary air system

17 - O-ring

- ❑ Renew

18 - Gasket

- ❑ Renew

19 - Bolt

- ❑ 8 Nm

20 - Pipe

- ❑ For secondary air

21 - Bolt

- ❑ 8 Nm

22 - Gasket

- ❑ Renew

23 - Bolt

- ❑ Renew
- ❑ 4 Nm + turn 45° further

24 - Combination valve for secondary air system (right-side)

- ❑ Fitting location: at rear of cylinder head
- ❑ Checking ⇒ page 296
- ❑ Removing and installing ⇒ page 298

Secondary air pump motor

Note

The illustration shows the secondary air pump motor 2 - V189- for cylinder bank 2 (left-side); the other secondary air pump motor is similar.

Protected by copyright. Copying for private or commercial purposes, in part or in whole, is not permitted unless authorised by AUDI AG. AUDI AG does not guarantee or accept any liability with respect to the correctness of information in this document. Copyright by AUDI AG.

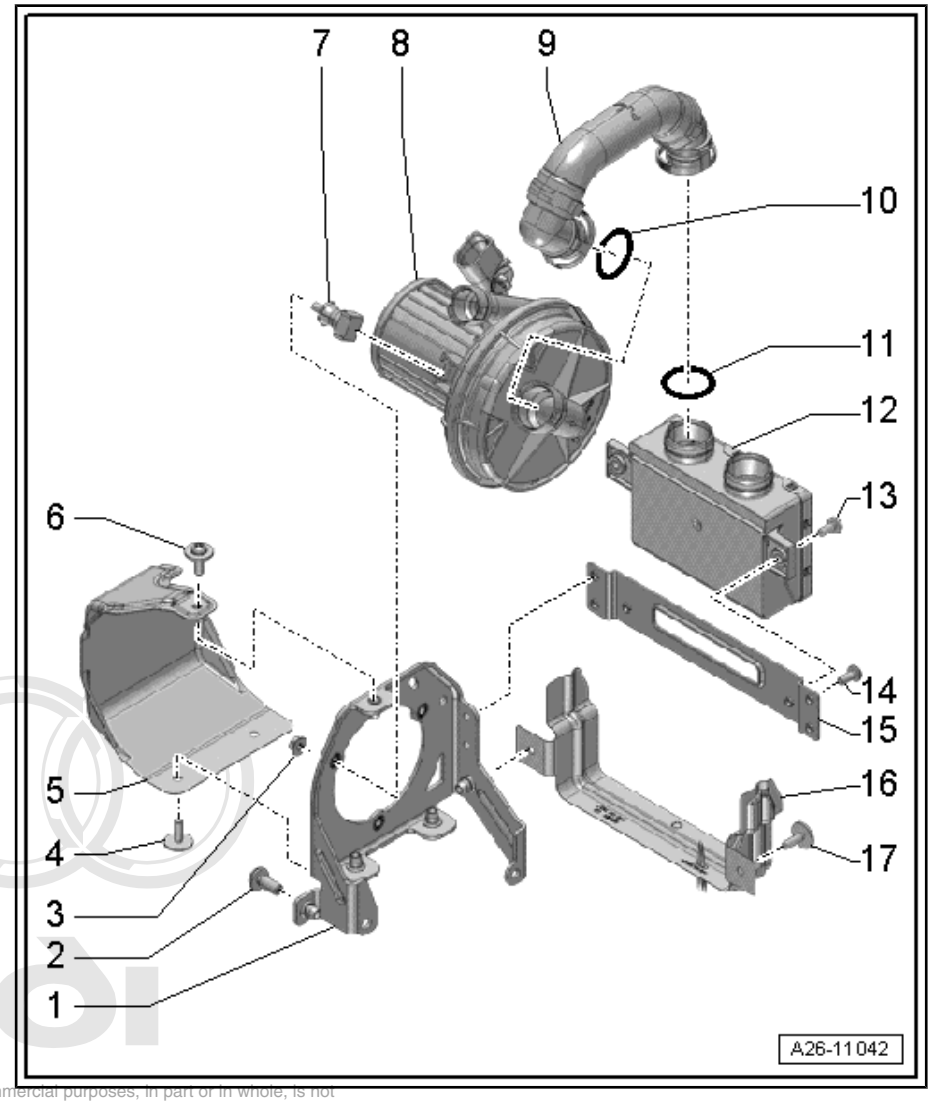

1 - Bracket

- ❑ For secondary air pump motor

2 - Bolt

- ❑ 20 Nm

3 - Nut

- ❑ 9 Nm

4 - Bolt

- ❑ 9 Nm

5 - Heat shield

6 - Bolt

- ❑ 9 Nm

7 - Bonded rubber mounting

8 - Secondary air pump motor

- ❑ Cylinder bank 1 (right-side): secondary air pump motor - V101-
- ❑ Cylinder bank 2 (left-side): secondary air pump motor 2 - V189-
- ❑ Fitting location: at front of gearbox
- ❑ Removing and installing ⇒ page 296
- ❑ Checking in Guided Fault Finding ⇒ vehicle diagnostic tester

9 - Hose

For secondary air from air cleaner

Protected by copyright. Copying for private or commercial purposes, in part or in whole, is not permitted unless authorised by AUDI AG. AUDI AG does not guarantee or accept any liability with respect to the correctness of information in this document. Copyright by AUDI AG.

10 - O-ring

- ❑ Renew

11 - O-ring

- ❑ Renew

12 - Air cleaner

- ❑ For secondary air system

13 - Bolt

- ❑ 9 Nm

14 - Bolt

- ❑ 9 Nm

15 - Bracket

16 - Bracket

- ❑ For air cleaner

17 - Bolt

- ❑ 9 Nm

2.2 Removing and installing secondary air pump motor -V101- / -V189-

Removing

– Remove plenum chamber partition panel ⇒ General body repairs, exterior; Rep. gr. 50 ; Bulkhead; Exploded view - bulkhead .

– Detach electrical connectors -1 and 2- from bracket and unplug.

– Press release tabs and disconnect secondary air hoses -arrows-.

– Move secondary air hoses to one side together with electrical wiring harness.

Protected by copyright. Copying or distribution is not permitted unless authorised by AUDI AG. AUDI AG does not guarantee or accept any liability with respect to the correctness of information in this document.

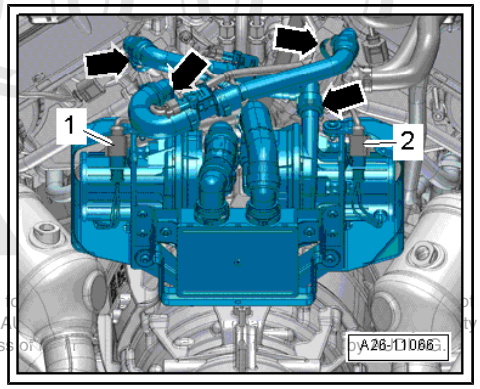

– Press release tabs and disconnect secondary air hoses -2-.

– Remove bolts -1 and 3- and press heat shields slightly to the side.

– Remove nuts -arrows-.

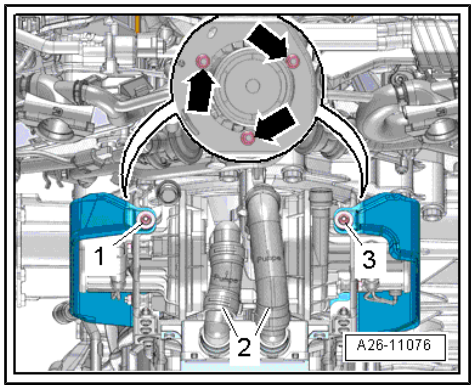

– Detach bonded rubber mountings -2- -arrow-.

– Press secondary air pump motor 2 - V189- -item 3- to right side and detach secondary air pump motor - V101- -item 1-.

– Detach -V189- .

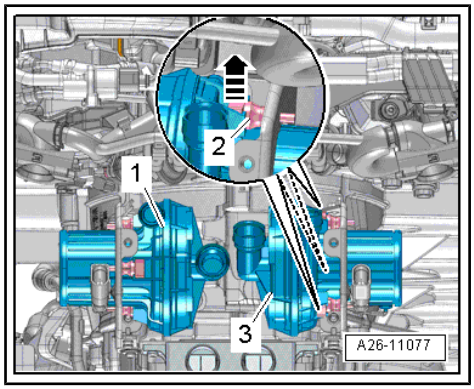

Installing

Installation is carried out in the reverse order; note the following:

Note

Fit new O-rings.

Tightening torques

♦ ⇒ “2.1 Exploded view - secondary air system”, page 293

♦ ⇒ General body repairs, exterior; Rep. gr. 50 ; Bulkhead; Exploded view - bulkhead

2.3 Checking combination valve

Procedure

- Vacuum hoses and hose connections do not leak.
- Vacuum hoses are not clogged.

– Remove engine cover panel ⇒ page 62 .

– If necessary, remove electrical connector -1- from bracket.

– Remove nuts -arrows- and detach bracket with electrical connectors from plenum chamber partition panel.

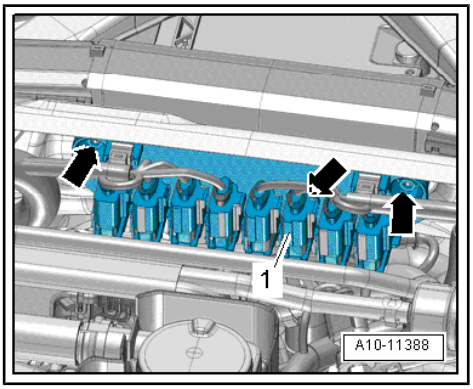

– Press release tabs and disconnect secondary air hose -2-.

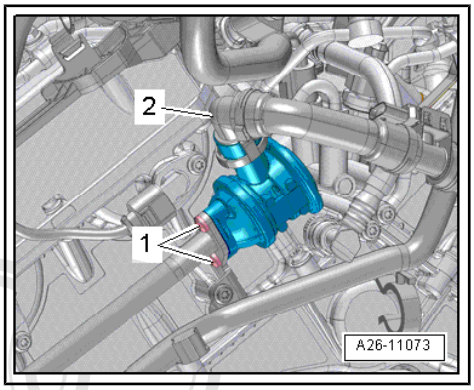

Note

Disregard -item 1-.

– Connect test hose -arrow- to combination valve for secondary air system.

– Blow lightly into secondary air hose with your mouth (do not use compressed air). Fit auxiliary hose if secondary air hose is not long enough.

• The combination valve for secondary air system should be closed; it should not be possible to blow through the hose.

– Blow more firmly (i.e. with greater pressure) into test hose with your mouth (do not use compressed air).

• The combination valve for secondary air system should open; it should now be possible to blow through the hose.

– Renew the relevant combination valve for secondary air if you cannot determine the switching point ⇒ page 298 .

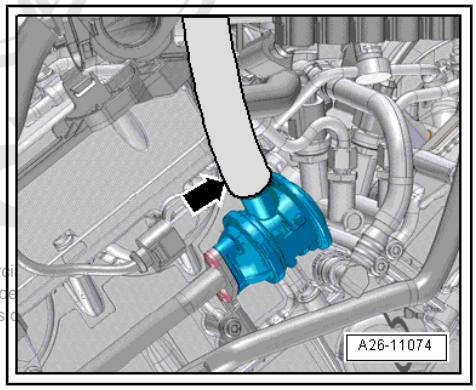

Protected by copyright. Copying for private or commercial purposes, in part or in whole, is not permitted unless authorised by AUDI AG. AUDI AG does not guarantee or accept any liability with respect to the correctness of information in this document.

Assembling

Installation is carried out in the reverse order; note the following:

Note

Fit new O-ring.

– Install engine cover panel ⇒ page 62 .

2.4 Removing and installing combination valve

Removing

Note

In the following the removal and installation procedures for the combination valve (left-side) for cylinder bank 2 (left-side) are described; they are similar on the right side.

– Remove engine cover panel ⇒ page 62 .

– Remove plenum chamber partition panel ⇒ General body repairs, exterior; Rep. gr. 50 ; Bulkhead; Exploded view - bulkhead .

– Press release tabs and disconnect secondary air hose -2-.

– Unscrew bolts -1- and detach combination valve for secondary air system.

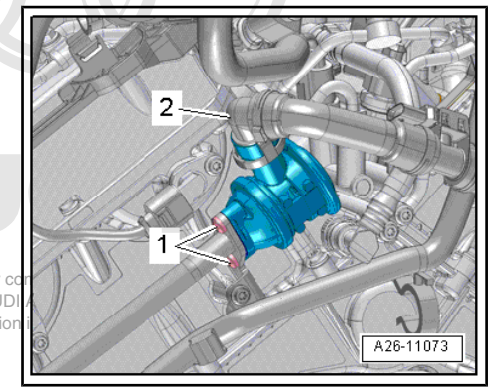

Installing

Installation is carried out in the reverse order; note the following:

Note

Renew gasket and O-ring.

Protected by copyright. Copying for private or co
permitted unless authorised by AUDI AG. AUDI A
with respect to the correctness of information

– Install engine cover panel ⇒ page 62 .

Tightening torques

♦ ⇒ “2.1 Exploded view - secondary air system”, page 293

♦ ⇒ General body repairs, exterior; Rep. gr. 50 ; Bulkhead; Exploded view - bulkhead

2.5 Removing and installing senders for secondary air pressure -G609- / -G610-

Note

In the following the procedures for removing and installing are described for the sender 1 for secondary air pressure - G609- for cylinder bank 1 (right-side); the procedures are similar on the other side.

Removing

– Remove engine cover panel ⇒ page 62 .

– If necessary, remove electrical connector -1- from bracket.
– Remove nuts -arrows- and detach bracket with electrical connectors from plenum chamber partition panel.

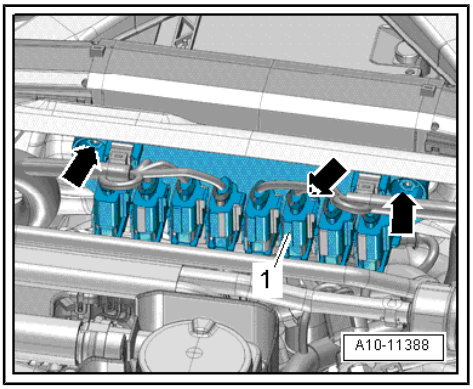

– Unplug electrical connector -1-.
– Release catches -2 and 3- and detach sender 1 for secondary air pressure - G609- .

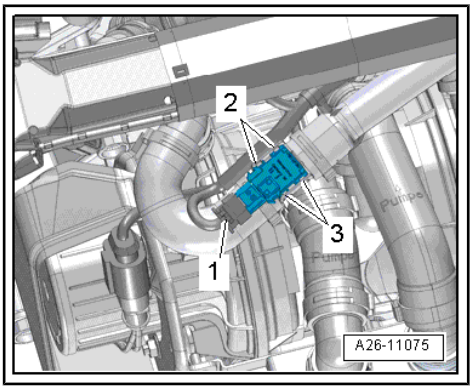

Installing

Installation is carried out in the reverse order; note the following:

Note

Fit new O-ring.

– Install engine cover panel ⇒ page 62 .

Protected by copyright. Copying for private or commercial purposes, in part or in whole, is not permitted unless authorised by AUDI AG. AUDI AG does not guarantee or accept any liability with respect to the correctness of information in this document. Copyright by AUDI AG.

3 Exhaust manifolds

⇒ "3.1 Exploded view - exhaust manifold", page 300
⇒ "3.2 Renewing exhaust manifold gaskets", page 301
⇒ "3.3 Removing and installing exhaust manifold", page 303

3.1 Exploded view - exhaust manifold

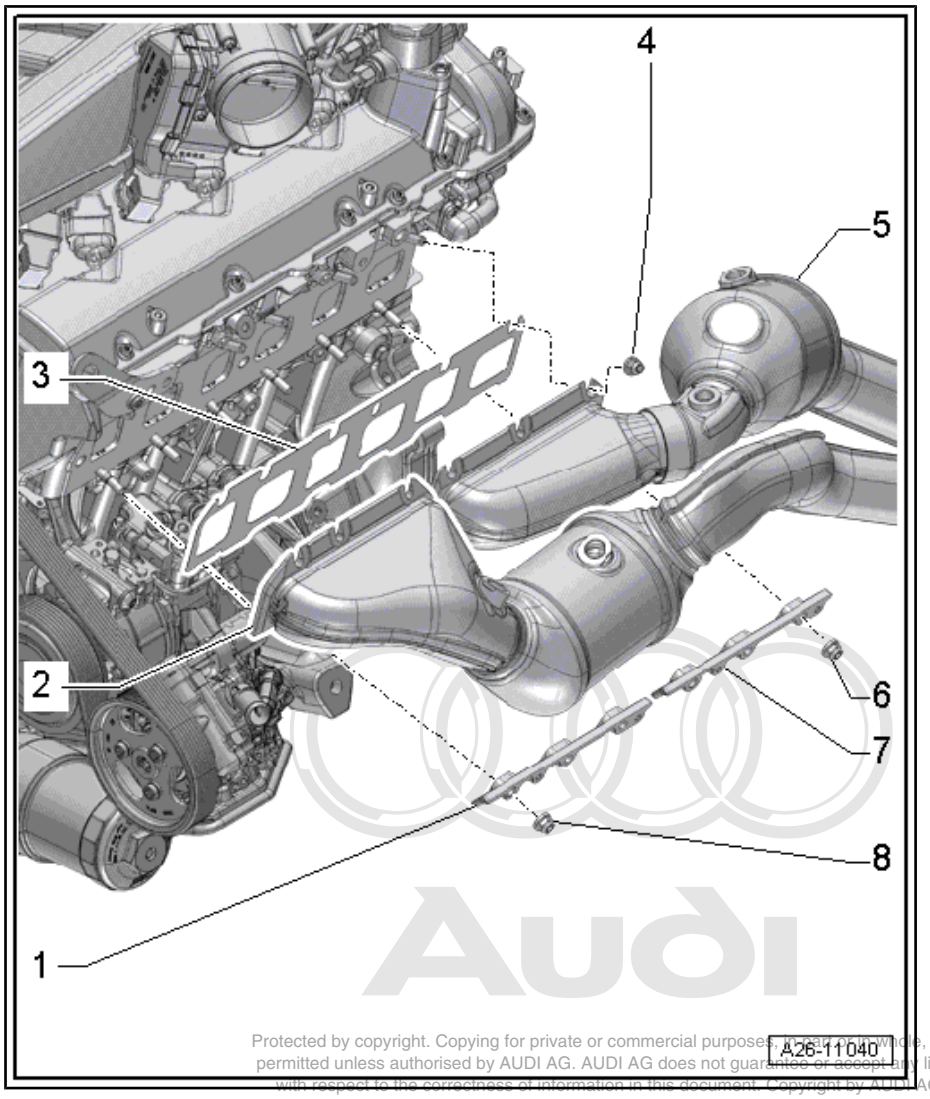

Protected by copyright. Copying for private or commercial purposes, in part or in whole, is not permitted unless authorised by AUDI AG. AUDI AG does not guarantee or accept any liability with respect to the correctness of information in this document. Copyright by AUDI AG.

1 - Mounting strip

- ❑ Remains installed when exhaust manifold with catalytic converter is removed

2 - Exhaust manifold (front) with catalytic converter

- ❑ Removing and installing: left-side ⇒ page 307 , right-side ⇒ page 310

3 - Gasket

- ❑ Renewing ⇒ page 301

4 - Nut

- ❑ Renew
- ❑ Coat thread with high-temperature paste; for high-temperature paste refer to ⇒ Electronic parts catalogue
- ❑ Tightening torque and tightening sequence: left-side ⇒ page 301 ; right-side ⇒ page 301

5 - Exhaust manifold (rear) with catalytic converter

- ❑ Removing and installing: left-side ⇒ page 303 , right-side ⇒ page 310

6 - Nut

- ❑ Renew
- ❑ Coat thread with high-temperature paste; for high-temperature paste refer to ⇒ Electronic parts catalogue
- ❑ 23 Nm

7 - Mounting strip

- ❑ Remains installed when exhaust manifold with catalytic converter is removed

8 - Nut

- ❑ Renew
- ❑ Coat thread with high-temperature paste; for high-temperature paste refer to ⇒ Electronic parts catalogue
- ❑ 23 Nm

Exhaust manifolds (left-side) with catalytic converters - tightening torque and sequence

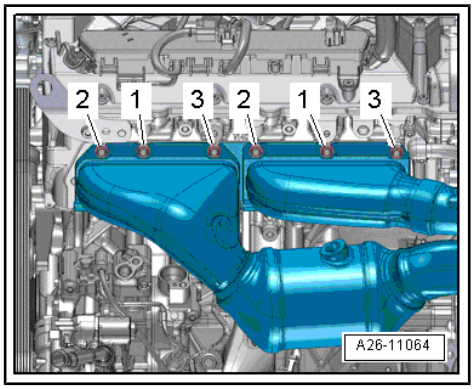

Note

- *Renew the nuts.*
- *Coat threads of nuts with high-temperature paste; for high temperature paste refer to ⇒ Electronic parts catalogue .*

– Tighten nuts for each exhaust manifold with catalytic converter in 3 stages in the sequence shown:

Stage	Nuts	Tightening torque
1.	-1, 2, 3-	Screw in by hand until contact is made
2.	-1, 2, 3-	15 Nm
3.	-1, 2, 3-	23 Nm

Exhaust manifolds (right-side) with catalytic converters - tightening torque and sequence

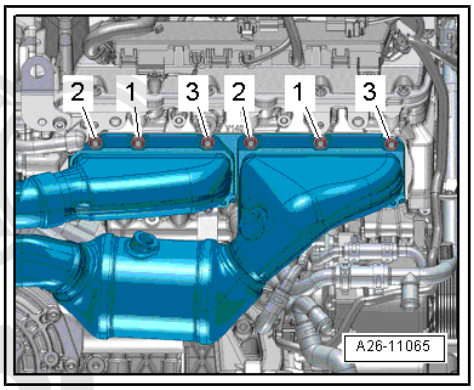

Note

- *Renew the nuts.*
- *Coat threads of nuts with high-temperature paste; for high temperature paste refer to ⇒ Electronic parts catalogue .*

– Tighten nuts for each exhaust manifold with catalytic converter in 3 stages in the sequence shown:

Stage	Nuts	Tightening torque
1.	-1, 2, 3-	Screw in by hand until contact is made
2.	-1, 2, 3-	15 Nm
3.	-1, 2, 3-	23 Nm

Protected by copyright. Copying for private or commercial purposes, in part or in whole, is not permitted unless authorised by AUDI AG. AUDI AG does not guarantee or accept any liability with respect to the correctness of information in this document. Copyright by AUDI AG.

3.2 Renewing exhaust manifold gaskets

Procedure

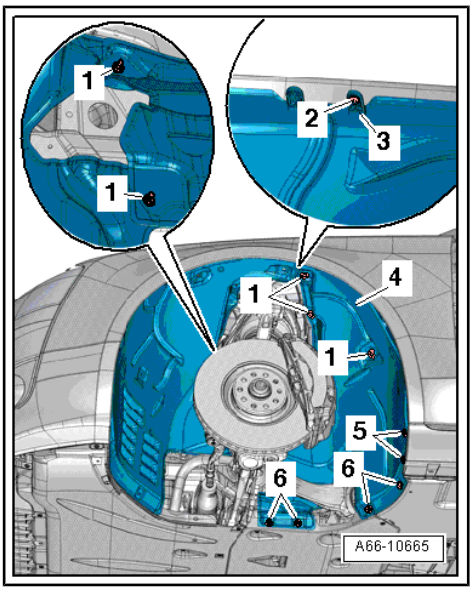

– Remove front silencer on relevant side ⇒ page 287 .

– Fully remove relevant front wheel housing liner ⇒ General body repairs, exterior; Rep. gr. 66 ; Wheel housing liner; Removing and installing wheel housing liner (front) .

– Remove corresponding air cleaner housing ⇒ page 245 .

Exhaust manifolds (left-side):

– Detach vacuum hose -1- from plenum chamber partition panel, move clear at clip -arrow- and move to right side.

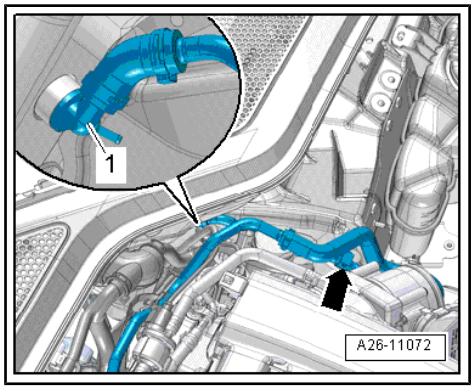

– Loosen sets of nuts in the sequence -3 ... 1-.

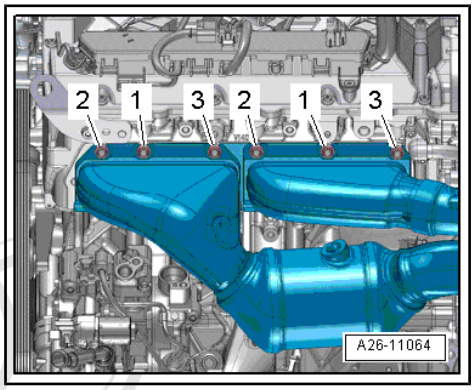

Note

- *For illustration purposes, the installation position is shown with the engine removed.*
- *Mounting strips remain installed.*

– Unscrew nuts, detach exhaust manifolds (left-side, front and rear) from mounting strips, detach from cylinder head and place down.

Protected by copyright. Copying for private or commercial purposes, in part or in whole, is not permitted unless authorised by AUDI AG. AUDI AG does not guarantee or accept any liability with respect to the correctness of information in this document. Copyright by AUDI AG.

Exhaust manifolds (right-side):

– Loosen sets of nuts in the sequence -3 ... 1-.

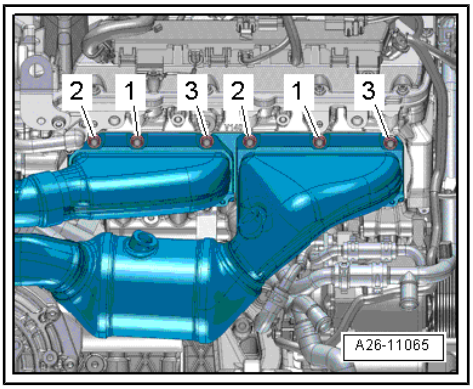

Note

- *For illustration purposes, the installation position is shown with the engine removed.*
- *Mounting strips remain installed.*

– Unscrew nuts, detach exhaust manifolds (right-side, front and rear) from mounting strips, detach from cylinder head and place down.

Continuation for both sides:

– Detach exhaust manifold gasket.

Note

- *Renew the nuts.*
- *Coat threads of nuts with high-temperature paste; for high temperature paste refer to ⇒ Electronic parts catalogue .*

– Install air cleaner housing ⇒ page 245 .

Tightening torques

- ⇒ Fig. ""Exhaust manifolds (left-side) with catalytic converters - tightening torque and sequence"" , page 301
- ⇒ Fig. ""Exhaust manifolds (right-side) with catalytic converters - tightening torque and sequence"" , page 301
- ⇒ "1.1 Exploded view - silencers", page 284
- ⇒ General body repairs, exterior; Rep. gr. 66 ; Wheel housing liner; Exploded view - wheel housing liner (front)

3.3 Removing and installing exhaust manifold

⇒ "3.3.1 Removing and installing exhaust manifold (rear left)", page 303

⇒ "3.3.2 Removing and installing exhaust manifold (front left)", page 307

⇒ "3.3.3 Removing and installing exhaust manifolds (right-side)", page 310

Any use of this document, or any part of it, for private or commercial purposes, in part or in whole, is not permitted unless authorised by AUDI AG. AUDI AG does not guarantee or accept any liability with respect to the correctness of information in this document. Copyright by AUDI AG.

3.3.1 Removing and installing exhaust manifold (rear left)

Special tools and workshop equipment required

- Engine and gearbox jack - V.A.G 1383 A-

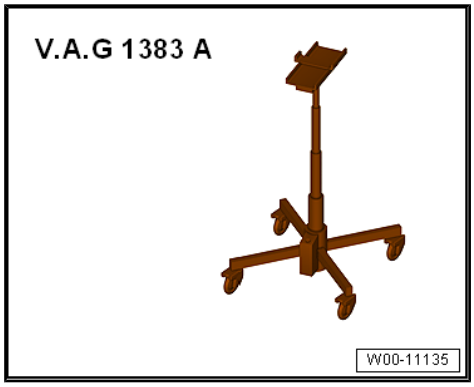

- Gearbox support - T10337-

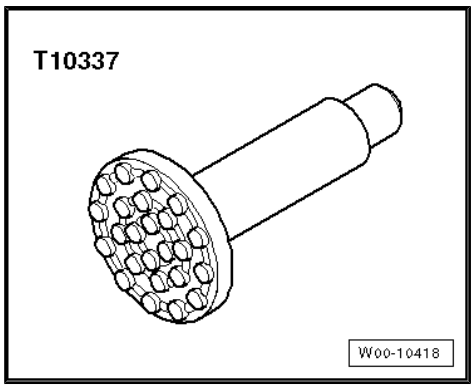

Removing

– Remove plenum chamber partition panel ⇒ General body repairs, exterior; Rep. gr. 50 ; Bulkhead; Exploded view - bulkhead .

– Remove exhaust manifold gasket (left-side) ⇒ page 301 .

– Remove Lambda probes -G286- -item 2-, -G287- -item 3- and -G288- -item 4- ⇒ page 275 .

– Remove front silencer (right-side) ⇒ page 287 .

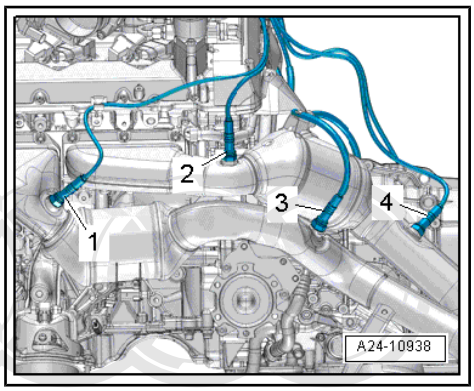

– Remove subframe cross brace ⇒ Running gear, axles, steering; Rep. gr. 40 ; Subframe; Removing and installing subframe cross brace .

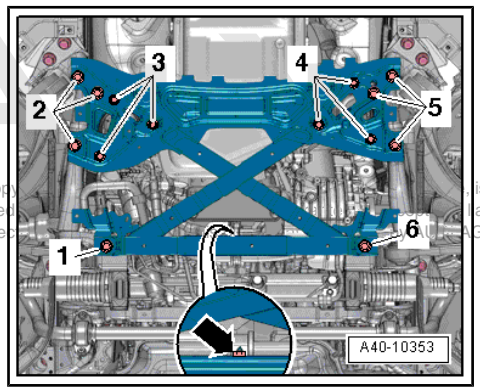

> **Caution**
>
> *Risk of damage to running gear components.*
>
> - *The vehicle must NOT be lowered onto its wheels if the engine/gearbox mountings, steering rack or subframe cross brace are not properly installed.*

Protected by copyright. Copy ... is not permitted unless authorised ... liability with respect to the corre... AG.

– Detach intermediate steering shaft from steering rack and move clear by telescoping upwards ⇒ Running gear, axles, steering; Rep. gr. 48 ; Steering column; Removing and installing intermediate steering shaft .

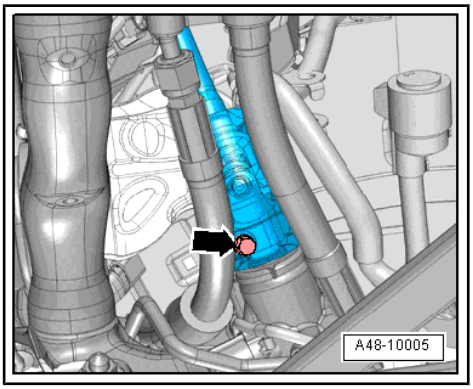

Note

Illustration shows vehicle version up to model year 2013.

– Remove bolts -arrows- and detach heat shield for drive shaft (left-side).

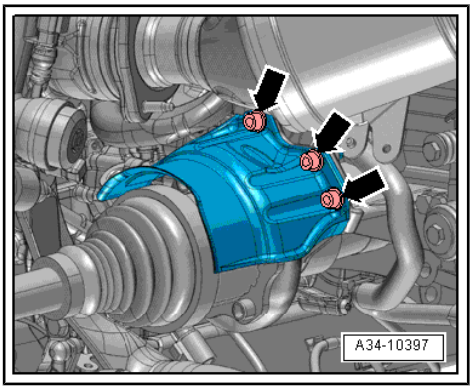

– Unplug electrical connector -2- for gearbox mounting valve 2 - N263- .

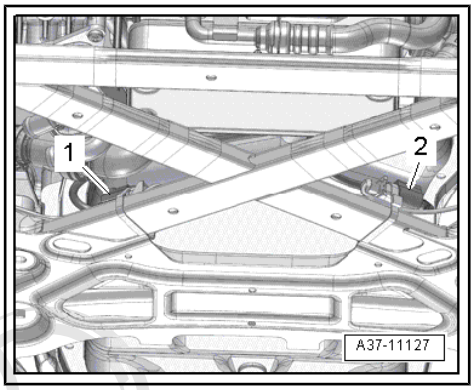

Note

- *The illustration shows the installation position with the sub-frame cross brace installed.*
- *Disregard -item 1-.*

– Unscrew bolt -3- and detach gearbox mounting strut.

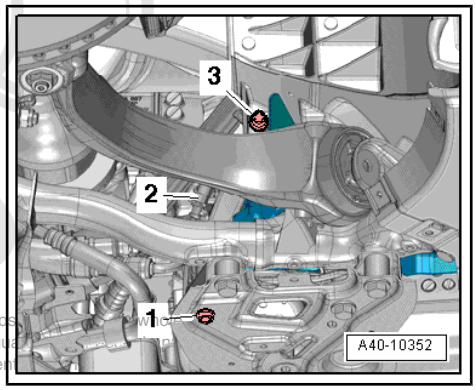

Note

Disregard -items 1, 2-.

Protected by copyright. Copying for private or commercial purposes, in whole or in part, is not permitted unless authorised by AUDI AG. AUDI AG does not guarantee or assume any liability with respect to the correctness of information in this document.

– Remove bolts -arrows- from gearbox mounting (left-side) and detach heat shield -1-.

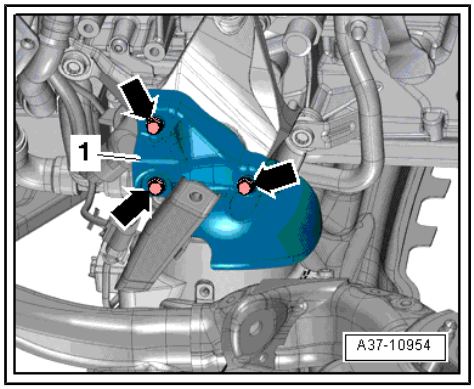

– Remove bolt -1- on bracket for hydraulic line.

– Remove bolts -arrows- and detach gearbox mounting (left-side) with gearbox support.

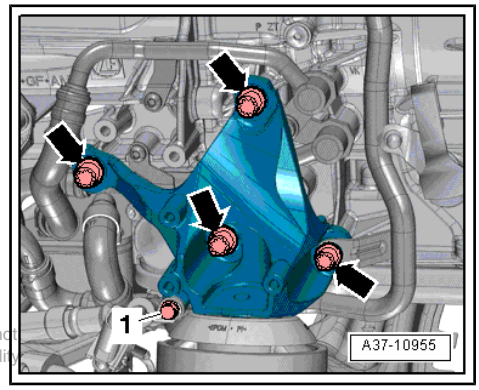

Protected by copyright. Copying for private or commercial purposes, in part or in whole, is not permitted unless authorised by AUDI AG. AUDI AG does not guarantee or accept any liability with respect to the correctness of information in this document. Copyright by AUDI AG.

– Fit gearbox support - T10337- onto engine and gearbox jack - V.A.G 1383 A- and position underneath gearbox.

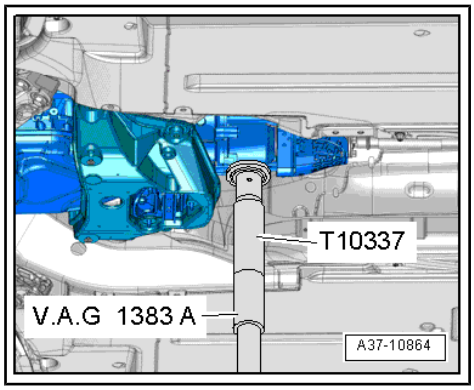

– Raise gearbox slightly using engine and gearbox jack - V.A.G 1383 A- .

> ⚠ **WARNING**
>
> *Risk of accident.*
>
> ◆ *Engine and gearbox jack - V.A.G 1383 A- must remain in position when work is being carried out and must not be left unattended.*

– Remove bolts -arrows- for tunnel cross member.

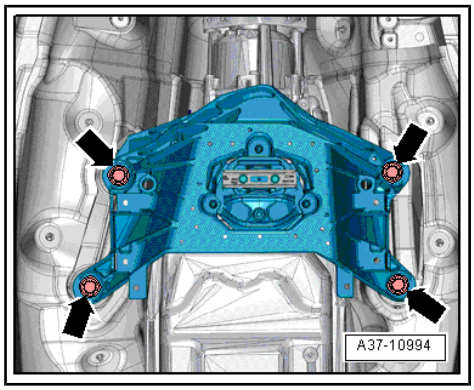

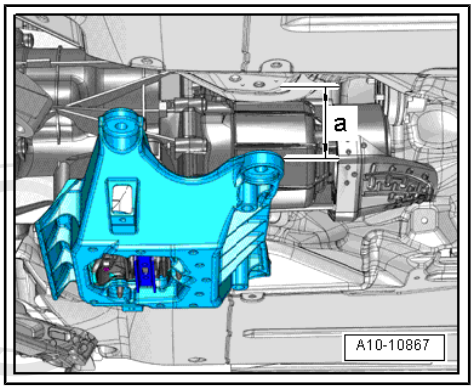

– Lower tunnel cross member as far as distance -a- using engine and gearbox jack - V.A.G 1383 A- .

• Dimension -a- = 75 mm (maximum).

– Remove exhaust manifold (rear left) with catalytic converter.

Installing

Installation is carried out in the reverse order; note the following:

Note

♦ *Renew gasket and nuts.*

♦ *Coat threads of nuts with high-temperature paste; for high temperature paste refer to ⇒ Electronic parts catalogue .*

♦ *Fit all cable ties in the original positions when installing.*

– Secure intermediate steering shaft to steering rack ⇒ Running gear, axles, steering; Rep. gr. 48 ; Steering column; Removing and installing intermediate steering shaft .

– Install Lambda probes -G286- , -G287- and -G288- ⇒ page 275 .

– Electrical connections and routing ⇒ Current flow diagrams, Electrical fault finding and Fitting locations.

– Install exhaust manifold gasket (left-side) ⇒ page 301 .

Tightening torques

♦ ⇒ “1.1 Exploded view - silencers”, page 284

♦ ⇒ “2.1 Exploded view - assembly mountings”, page 48

♦ Heat shield for drive shaft ⇒ Running gear, axles, steering; Rep. gr. 40 ; Drive shaft; Exploded view - drive shaft

♦ Subframe cross brace ⇒ Running gear, axles, steering; Rep. gr. 40 ; Subframe; Exploded view - subframe

♦ ⇒ “1.3 Removing and installing front silencers”, page 287

♦ ⇒ General body repairs, exterior; Rep. gr. 50 ; Bulkhead; Exploded view - bulkhead

3.3.2 Removing and installing exhaust manifold (front left)

Removing

– Remove plenum chamber partition panel ⇒ General body repairs, exterior; Rep. gr. 50 ; Bulkhead; Exploded view - bulkhead .

– Remove exhaust manifold gasket (left-side) ⇒ page 301 .

– Remove Lambda probe -G285- ⇒ page 275 .

Reproduction or copying of this document for commercial purposes, in part or in whole, is not permitted without prior consent by AUDI AG. AUDI AG does not guarantee or accept any liability with respect to the correctness of information in this document. Copyright by AUDI AG.

– Detach electrical connectors from bracket, unplug and move electrical wires clear:

5 - For Lambda probe 3 - G287- (after catalytic converter)

6 - For Lambda probe 4 - G288- (after catalytic converter)

8 - For Lambda probe 4 - G286-

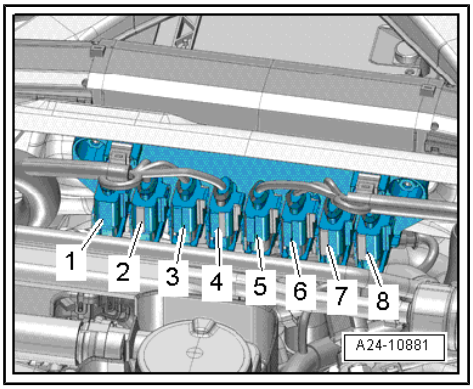

Note

Disregard items -1 ... 4-.

– Remove subframe ⇒ Running gear, axles, steering; Rep. gr. 40 ; Subframe; Removing and installing subframe with steering rack .

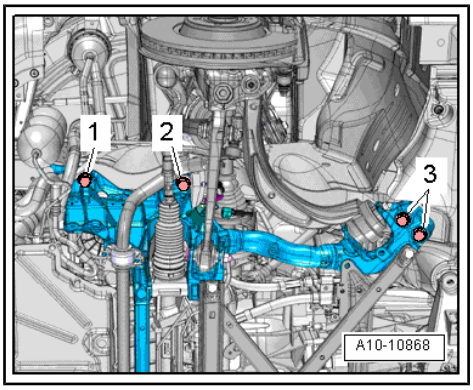

– Remove bolts -arrows- and detach heat shield for drive shaft (left-side).

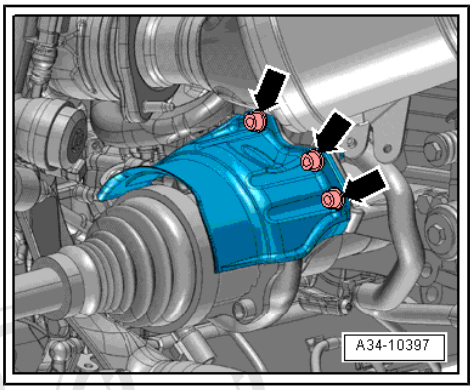

– Unbolt drive shaft (left-side) from gearbox flange shaft ⇒ Running gear, axles, steering; Rep. gr. 40 ; Drive shaft; Removing and installing drive shaft .

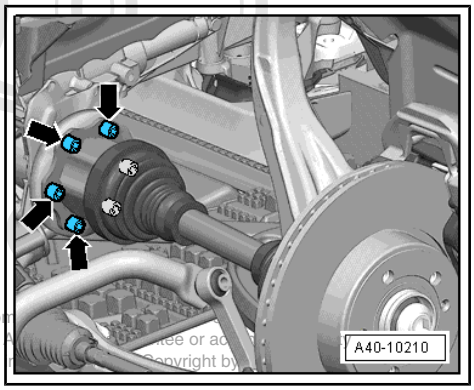

Protected by copyright. Copying for private or com
permitted unless authorised by AUDI AG. AUDI
with respect to the correctness of information

– Unplug electrical connector -2- for gearbox mounting valve 2 - N263- .

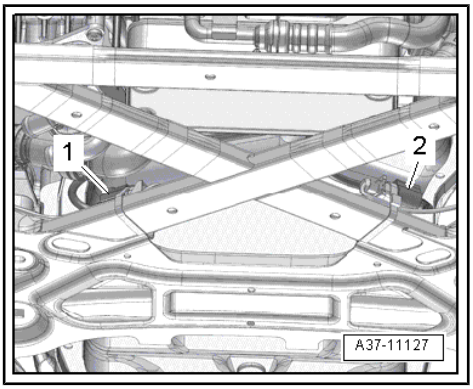

Note

- *The illustration shows the installation position with the sub-frame cross brace installed.*
- *Disregard -item 1-.*

– Remove bolts -arrows- from gearbox mounting (left-side) and detach heat shield -1-.

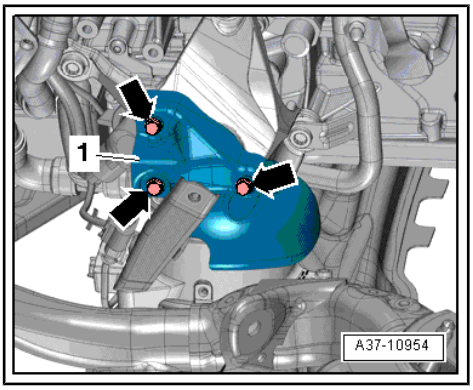

Protected by copyright. Copying for private or commercial purposes, in part or in whole, is not permitted unless authorised by AUDI AG. AUDI AG does not guarantee or accept any liability with respect to the correctness of information in this document. Copyright by AUDI AG.

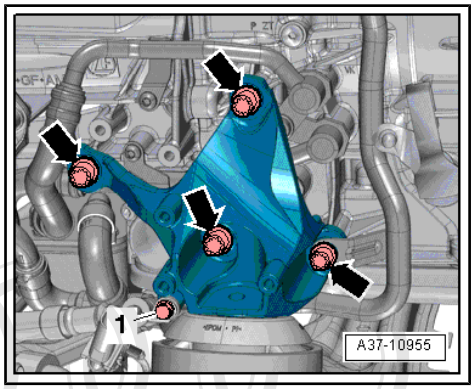

– Remove bolt -1- on bracket for hydraulic line.
– Remove bolts -arrows- and detach gearbox mounting (left-side) with gearbox support.
– Remove exhaust manifolds (left-side, front and rear) with catalytic converters.

Installing

Installation is carried out in the reverse order; note the following:

Note

- *Renew gasket and nuts.*
- *Coat threads of nuts with high-temperature paste; for high temperature paste refer to ⇒ Electronic parts catalogue .*
- *Fit all cable ties in the original positions when installing.*

– Insert exhaust manifolds in mounting strips.
– Tighten nuts for exhaust manifold ⇒ page 301 .
– Install Lambda probe -G285- ⇒ page 275 .
– Electrical connections and routing ⇒ Current flow diagrams, Electrical fault finding and Fitting locations.

Protected by copyright. Copying for private or commercial purposes, in part or in whole, is not permitted unless authorised by AUDI AG. AUDI AG does not guarantee or accept any liability with respect to the correctness of information in this document. Copyright by AUDI AG.

Tightening torques

- Tunnel cross-piece ⇒ Rep. gr. 37 ; Assembly mountings; Exploded view - assembly mountings
- ⇒ “2.1 Exploded view - assembly mountings”, page 48 .
- Drive shaft and heat shield ⇒ Running gear, axles, steering; Rep. gr. 40 ; Drive shaft; Exploded view - drive shaft
- ⇒ Running gear, axles, steering; Rep. gr. 40 ; Subframe; Exploded view - subframe
- ⇒ General body repairs, exterior; Rep. gr. 50 ; Bulkhead; Exploded view - bulkhead

3.3.3 Removing and installing exhaust manifolds (right-side)

Removing

- Gearbox removed ⇒ Rep. gr. 37 ; Removing and installing gearbox; Removing gearbox .

– Detach electrical connectors from bracket, unplug and move electrical wires clear:

1 - For Lambda probe - G39-

2 - For Lambda probe 2 - G108-

3 - For Lambda probe after catalytic converter - G130-

4 - For Lambda probe 2 - G131- (after catalytic converter)

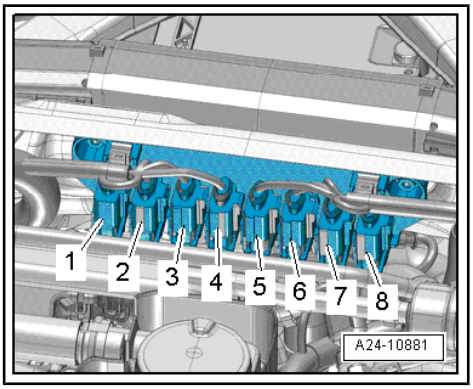

Note

Disregard items -5 ... 8-.

– Remove exhaust manifold gasket (right-side) ⇒ page 301 .

– Remove exhaust manifolds (right-side, front and rear) with catalytic converters.

Installing

Installation is carried out in the reverse order; note the following:

Note

- *Renew gasket and nuts.*
- *Coat threads of nuts with high-temperature paste; for high temperature paste refer to ⇒ Electronic parts catalogue .*
- *Fit all cable ties in the original positions when installing.*

– Electrical connections and routing ⇒ Current flow diagrams, Electrical fault finding and Fitting locations.

– Install exhaust manifold gasket (right-side) ⇒ page 301 .

Protected by copyright. Copying for private or commercial purposes, in part or in whole, is not permitted unless authorised by AUDI AG. AUDI AG does not guarantee or accept any liability with respect to the correctness of information in this document. Copyright by AUDI AG.

28 – Ignition system

1 Ignition system

⇒ “1.1 Exploded view - ignition system”, page 312

⇒ “1.2 Test data, spark plugs”, page 313

⇒ “1.3 Removing and installing ignition coils with output stages”, page 313

⇒ “1.4 Removing and installing knock sensor”, page 314

⇒ “1.5 Removing and installing Hall senders”, page 316

⇒ “1.6 Removing and installing engine speed sender G28 ”, page 317

1.1 Exploded view - ignition system

Protected by copyright. Copying for private or commercial purposes, in part or in whole, is not permitted unless authorised by AUDI AG. AUDI AG does not guarantee or accept any liability with respect to the correctness of information in this document. Copyright by AUDI AG.

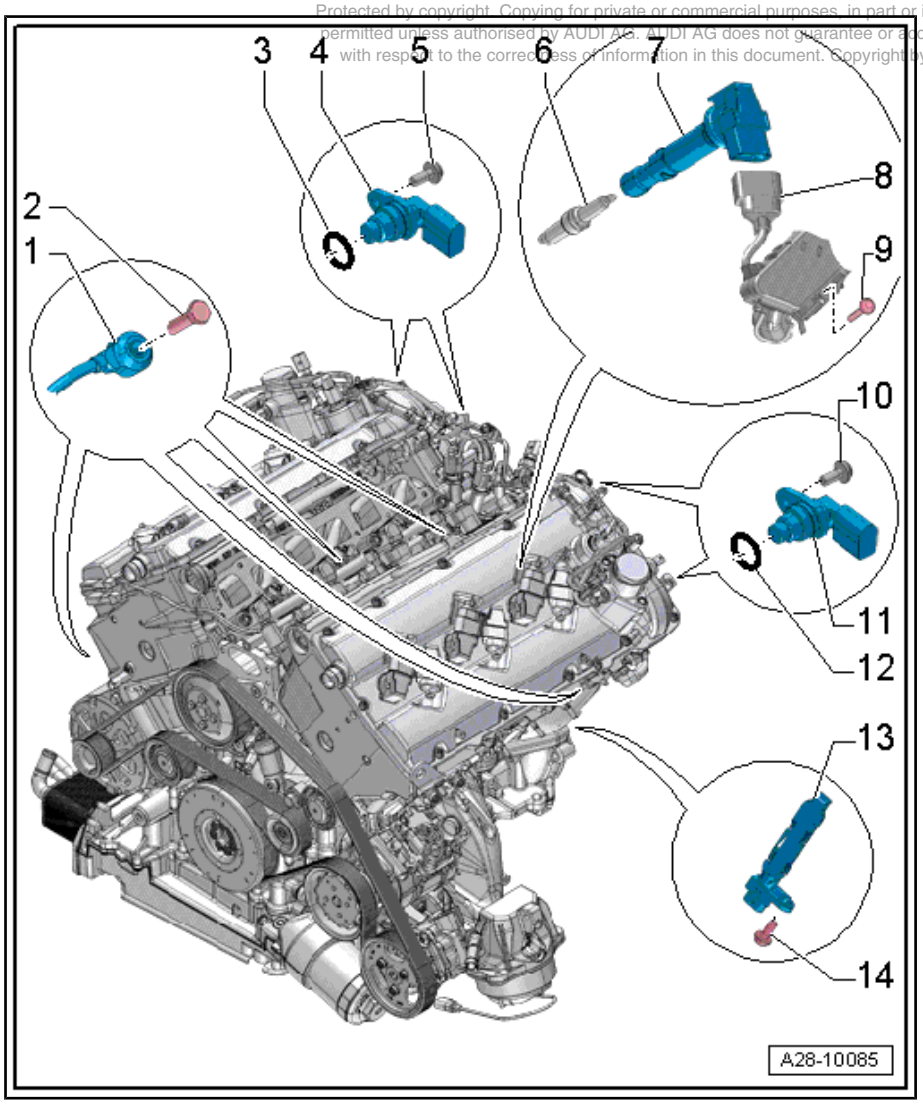

1 - Knock sensor

- ❑ Cylinder bank 1 (right-side): knock sensor 1 - G61- and knock sensor 2 - G66-
- ❑ Cylinder bank 2 (left-side): knock sensor 3 - G198- and knock sensor 4 - G199-
- ❑ Removing and installing ⇒ page 314

2 - Bolt

- ❑ 20 Nm

3 - O-ring

- ❑ Renew

4 - Hall sender

- ❑ Inlet side: Hall sender - G40-
- ❑ Exhaust side: Hall sender 2 - G163-
- ❑ Removing and installing ⇒ page 316

5 - Bolt

- ❑ 9 Nm

6 - Spark plug

- ❑ Change interval ⇒ Maintenance tables
- ❑ Tightening torque ⇒ Maintenance ; Booklet 410

7 - Ignition coil

- ❑ Removing and installing ⇒ page 313

8 - Electrical connector

9 - Bolt

- ❑ 5 Nm

10 - Bolt

- ❑ 9 Nm

11 - Hall sender

- ❑ Inlet side: Hall sender 3 - G300-
- ❑ Exhaust side: Hall sender 4 - G301-
- ❑ Removing and installing ⇒ page 316

12 - O-ring

- ❑ Renew

13 - Engine speed sender - G28-

- ❑ Removing and installing ⇒ page 317

14 - Bolt

- ❑ Renew
- ❑ 4 Nm + 45°

Protected by copyright. Copying for private or commercial purposes, in part or in whole, is not permitted unless authorised by AUDI AG. AUDI AG does not guarantee or accept any liability with respect to the correctness of information in this document. Copyright by AUDI AG.

1.2 Test data, spark plugs

Test data		6.3 ltr. / 4-valve engine
Idling speed		Cannot be adjusted; regulated by idling speed stabilisation
Ignition timing		Not adjustable (determined by control unit)
Ignition system		Multi-coil system with 12 ignition coils (output stages integrated) connected directly to spark plugs via spark plug connectors
Spark plugs	Designations	⇒ Electronic parts catalogue
	Tightening torque	⇒ Maintenance ; Booklet 410
Firing order		1-12-5-8-3-10-6-7-2-11-4-9

1.3 Removing and installing ignition coils with output stages

Special tools and workshop equipment required

- ♦ Puller - T10094 A-

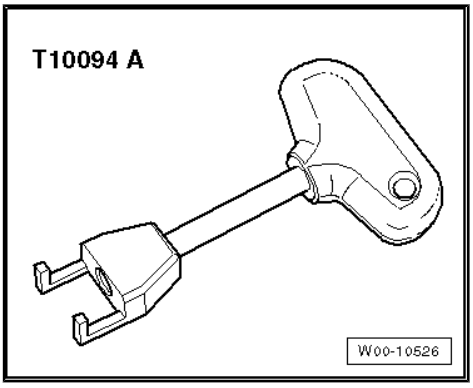

Removing

– Remove relevant intake manifold ⇒ page 249 .

– Unplug electrical connector -1- at ignition coil.

– Remove ignition coils using puller - T10094 A- -arrow-.

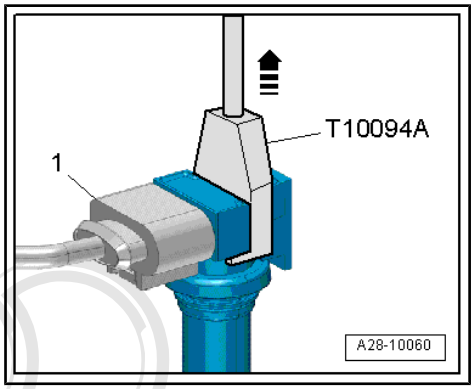

Installing

– Align ignition coils -2- with recesses -1- in cylinder head cover, as shown in illustration.

– Press ignition coils onto spark plugs by hand (do NOT use tool).

Remaining installation steps are carried out in reverse sequence; note the following:

– Install intake manifold ⇒ page 249 .

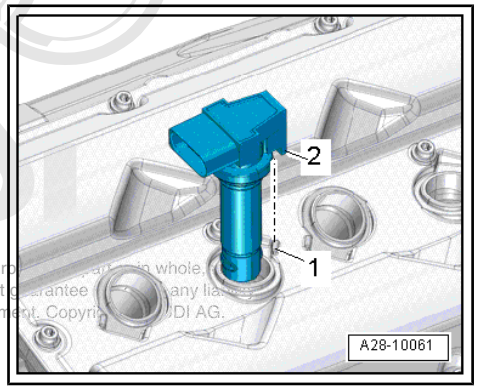

Protected by copyright. Copying for private or commercial purposes, in whole or in part, is not permitted unless authorised by AUDI AG. AUDI AG does not guarantee or assume any liability with respect to the correctness of information in this document. Copyright by AUDI AG.

1.4 Removing and installing knock sensor

Removing

Fitting locations
⇒ “1.1 Exploded view - ignition system”, page 312

Note

Fit all cable ties and heat insulation sleeves in the original positions when installing.

Knock sensor 1 - G61- :

– Remove alternator ⇒ Electrical system; Rep. gr. 27 ; Alternator; Removing and installing alternator .

– Unplug electrical connector -1-.

– Unscrew bolt -2- and remove knock sensor 1 - G61- .

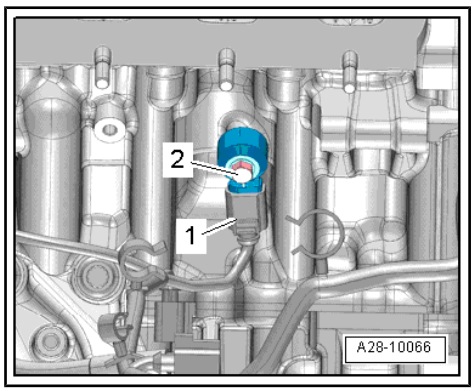

Knock sensor 2 - G66- / knock sensor 3 - G198- :

– Unplug electrical connectors -1 and 2-.

– Remove fuel rails (left and right)
⇒ “4.2 Removing and installing injectors”, page 253 .

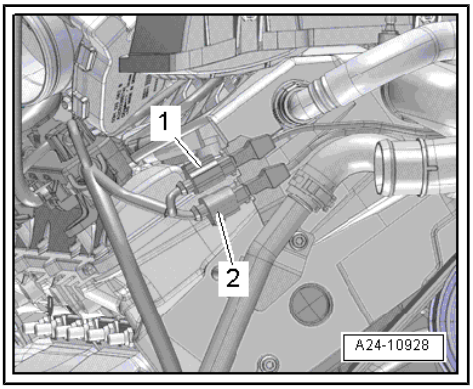

– Unscrew bolt and remove relevant knock sensor:

1 - Knock sensor 2 - G66-

2 - Knock sensor 3 - G198-

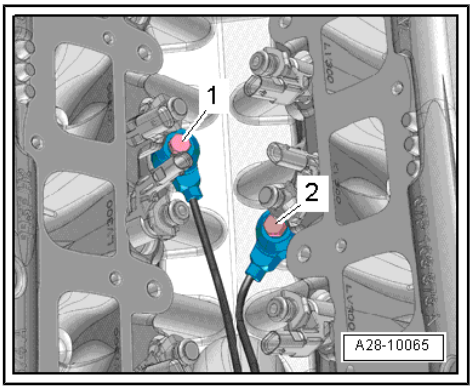

Knock sensor 4 - G199- :

– Remove front wheel housing liner (left-side) completely ⇒ General body repairs, exterior; Rep. gr. 66 ; Wheel housing liner; Removing and installing front wheel housing liner .

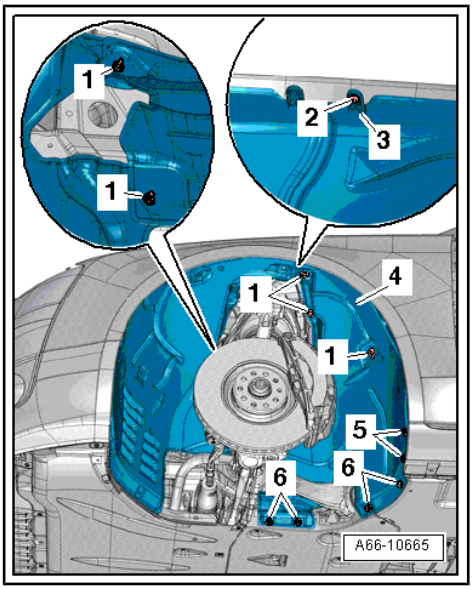

– Remove bolts -arrows- and detach heat shield for drive shaft (left-side).

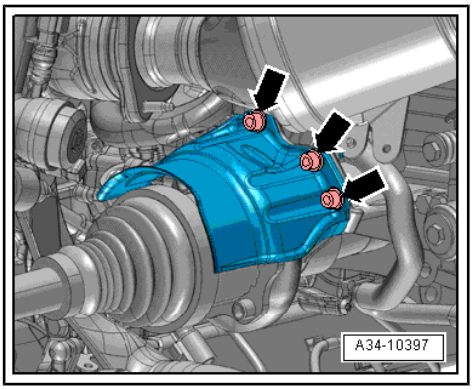

Protected by copyright. Copying for private or commercial purposes, in part or in whole, is not permitted unless authorised by AUDI AG. AUDI AG does not guarantee or accept any liability with respect to the correctness of information in this document. Copyright by AUDI AG.

– Unbolt drive shaft (left-side) from gearbox flange shaft ⇒ Running gear, axles, steering; Rep. gr. 40 ; Drive shaft; Removing and installing drive shaft .

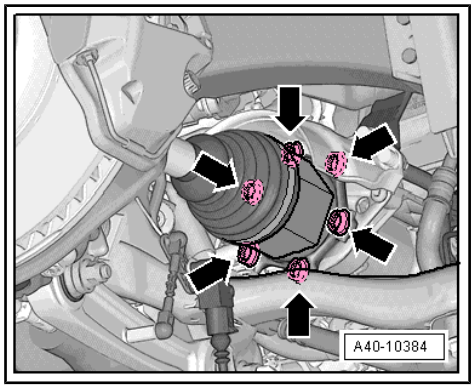

– Cut through cable tie and remove heat insulation sleeve -1-.
– Unplug electrical connector -3-.
– Unscrew bolt -2- and remove knock sensor 4 - G199- .

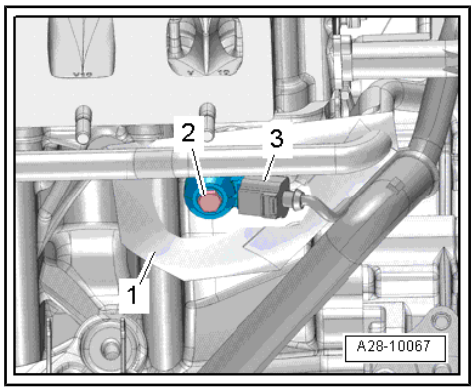

Installing

Installation is carried out in the reverse order; note the following:

Note

The tightening torque influences the function of the knock sensor.

– Install alternator ⇒ Electrical system; Rep. gr. 27 ; Alternator; Removing and installing alternator .

Tightening torques

- ⇒ “1.1 Exploded view - ignition system”, page 312
- Drive shaft and heat shield ⇒ Running gear, axles, steering; Rep. gr. 40 ; Drive shaft; Exploded view - drive shaft
- ⇒ General body repairs, exterior; Rep. gr. 66 ; Wheel housing liner; Exploded view - wheel housing liner (front)

1.5 Removing and installing Hall senders

Removing

Protected by copyright. Copying for private or commercial purposes, in part or in whole, is not permitted unless authorised by AUDI AG. AUDI AG does not guarantee or accept any liability with respect to the correctness of information in this document. Copyright by AUDI AG.

Note

Fit all cable ties and heat insulation sleeves in the original positions when installing.

Hall sender -G40- / -G163- :

– Detach all electrical connectors from bracket.
– Remove nuts -arrows- and detach bracket for electrical connectors from plenum chamber partition panel.

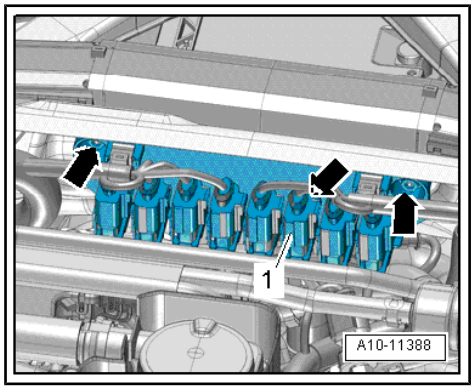

– Press release tabs and disconnect relevant secondary air hose -2-.

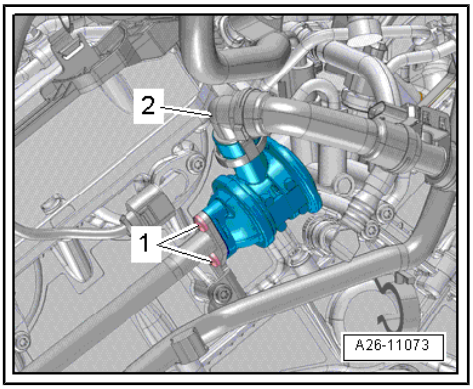

Note

Disregard -item 1-.

– Unplug electrical connector -1-.

– Unscrew bolt -2- and detach relevant Hall sender.

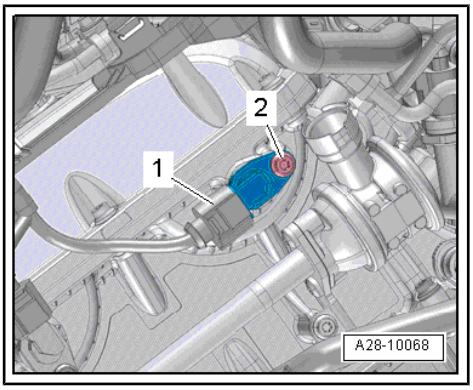

Hall sender -G300- / -G301- :

– Remove plenum chamber partition panel ⇒ General body repairs, exterior; Rep. gr. 50 ; Bulkhead; Exploded view - bulkhead .

– Cut through cable tie and remove heat insulation sleeve -1-.

– Unplug electrical connector -2-.

– Unscrew bolt -3- and detach relevant Hall sender.

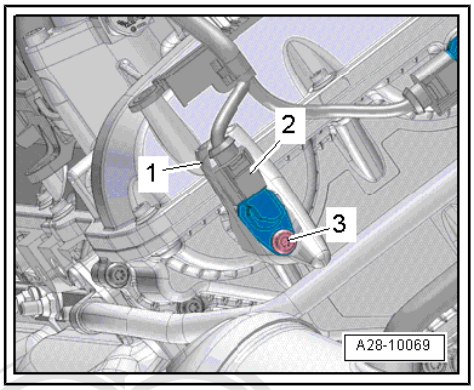

Installing

Installation is carried out in the reverse order; note the following:

Tightening torques

♦ ⇒ "1.1 Exploded view - ignition system", page 312

♦ ⇒ General body repairs, exterior; Rep. gr. 50 ; Bulkhead; Exploded view - bulkhead

1.6 Removing and installing engine speed sender - G28-

Removing

– Remove noise insulation panels -1- and -2- ⇒ General body repairs, exterior; Rep. gr. 66 ; Noise insulation; Removing and installing noise insulation .

Protected by copyright. Copying for private or commercial purposes, in part, is not permitted unless authorised by AUDI AG. AUDI AG does not guarantee or assume any liability with respect to the correctness of information in this document.

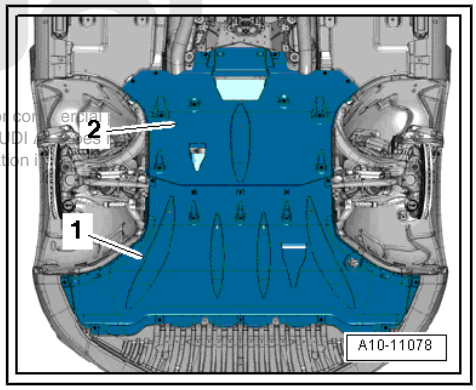

– Unplug electrical connector -2-.

– Unscrew bolt -1- and remove engine speed sender - G28- .

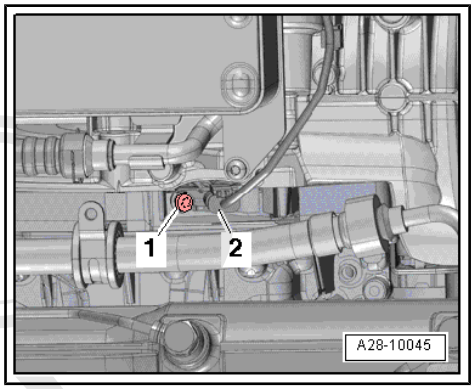

Installing

Install in reverse order.

Tightening torques

♦ ⇒ “1.1 Exploded view - ignition system”, page 312

♦ ⇒ General body repairs, exterior; Rep. gr. 66 ; Noise insulation; Exploded view - noise insulation

Protected by copyright. Copying for private or commercial purposes, in part or in whole, is not permitted unless authorised by AUDI AG. AUDI AG does not guarantee or accept any liability with respect to the correctness of information in this document. Copyright by AUDI AG.