Workshop Manual

Audi A8 2010 ➤

Direct petrol injection and ignition system (8-cyl. 4.2 ltr. 4-valve)									
Engine ID	CDR A								

Edition 04.2010

Protected by copyright. Copying for private or commercial purposes, in part or in whole, is not permitted unless authorised by AUDI AG. AUDI AG does not guarantee or accept any liability with respect to the correctness of information in this document. Copyright by AUDI AG.

List of Workshop Manual Repair GroupsList of Workshop Manual Repair GroupsList of Workshop Manual Repair Groups

Repair Group

24 - Mixture preparation - injection

28 - Ignition system

Protected by copyright. Copying for private or commercial purposes, in part or in whole, is not permitted unless authorised by AUDI AG. AUDI AG does not guarantee or accept any liability with respect to the correctness of information in this document. Copyright by AUDI AG.

Technical information should always be available to the foremen and mechanics, because their careful and constant adherence to the instructions is essential to ensure vehicle road-worthiness and safety. In addition, the normal basic safety precautions for working on motor vehicles must, as a matter of course, be observed.

All rights reserved.
No reproduction without prior agreement from publisher.

Copyright © 2010 Audi AG, Ingolstadt

D3E802534A3

Contents

24 - Mixture preparation - injection . . . 1
- **1 Safety precautions and rules for cleanliness** . . . 1
- 1.1 General notes on self-diagnosis . . . 1
- 1.2 Safety precautions when working on vehicles with start/stop system . . . 1
- 1.3 Safety precautions . . . 2
- 1.4 Rules for cleanliness when working on the injection system . . . 3
- 1.5 Important: Required procedure prior to opening high-pressure injection system . . . 3
- 1.6 Checking vacuum system . . . 4
- **2 Technical data** . . . 6
- **3 Overview of fitting locations** . . . 7
- **4 Air cleaner** . . . 17
- 4.1 Air cleaner - exploded view . . . 17
- 4.2 Removing and installing engine cover panel . . . 18
- 4.3 Removing and installing air filter element . . . 18
- 4.4 Removing and installing air cleaner housing . . . 20
- **5 Intake manifold and injectors** . . . 22
- 5.1 Intake manifold - exploded view . . . 22
- 5.2 Removing and installing intake manifold . . . 23
- 5.3 Removing and installing throttle valve module J338 . . . 27
- 5.4 Intake manifold (bottom section) with fuel rail - exploded view . . . 30
- 5.5 Injectors and fuel rail - exploded view . . . 31
- 5.6 Removing and installing intake manifold (bottom section) with fuel rail . . . 32
- 5.7 Removing and installing injectors . . . 35
- 5.8 Diagram of vacuum hose connections at intake manifold . . . 40
- **6 High-pressure pump** . . . 41
- 6.1 High-pressure pump - exploded view . . . 41
- 6.2 Removing and installing high-pressure pump . . . 43
- **7 Components of injection system** . . . 46
- 7.1 Removing and installing fuel pressure sender G247 . . . 46
- 7.2 Checking fuel pressure and residual pressure (up to high-pressure pump) . . . 46
- **8 Lambda probes** . . . 51
- 8.1 Lambda probes - overview . . . 51
- 8.2 Removing and installing Lambda probe G39 (before catalytic converter) . . . 51
- 8.3 Removing and installing Lambda probe after catalytic converter G130 . . . 54
- 8.4 Removing and installing Lambda probe 2 G108 (before catalytic converter) . . . 56
- 8.5 Removing and installing Lambda probe after catalytic converter G131 . . . 58
- **9 Engine control unit** . . . 60
- 9.1 Wiring and component check with break-out box VAS 6606 . . . 60
- 9.2 Removing and installing engine control unit J623 . . . 61

28 - Ignition system . . . 64
- **1 General notes and safety precautions** . . . 64
- 1.1 General notes on ignition system . . . 64
- 1.2 Safety precautions . . . 64
- **2 Servicing ignition system** . . . 66
- 2.1 Test data . . . 66
- 2.2 Ignition system - exploded view . . . 66
- 2.3 Removing and installing ignition coils . . . 67
- 2.4 Removing and installing knock sensors G61 , G66 , G198 , G199 . . . 69
- 2.5 Removing and installing Hall senders . . . 70
- 2.6 Removing and installing engine speed sender G28 . . . 71

Protected by copyright. Copying for private or commercial purposes, in part or in whole, is not permitted unless authorised by AUDI AG. AUDI AG does not guarantee or accept any liability with respect to the correctness of information in this document. Copyright by AUDI AG.

Protected by copyright. Copying for private or commercial purposes, in part or in whole, is not permitted unless authorised by AUDI AG. AUDI AG does not guarantee or accept any liability with respect to the correctness of information in this document. Copyright by AUDI AG.

24 – Mixture preparation - injection

1 Safety precautions and rules for cleanliness

1.1 General notes on self-diagnosis

- The engine control unit has an event memory.
- Interrogate the event memory before carrying out any repairs or Fault Finding.
- The vacuum hoses and connections must be checked (to prevent unmetered air).
- Fuel hoses in engine compartment must only be secured with spring-type clips. O-type clips or screw-type clips must not be used.
- A voltage of at least 11.5 V is required for proper operation of the electrical components.
- Do not use sealants containing silicone. Particles of silicone drawn into the engine will not be burnt in the engine and will damage the Lambda probe.
- The vehicles are fitted with a crash/fuel shut-off system. This function is designed to reduce the risk of a vehicle fire after a crash by deactivating the fuel pump via the fuel pump relay.

1.2 Safety precautions when working on vehicles with start/stop system

Protected by copyright. Copying for private or commercial purposes, in part or in whole, is not permitted unless authorised by AUDI AG. AUDI AG does not guarantee or accept any liability with respect to the correctness of information in this document. Copyright by AUDI AG.

WARNING

Risk of injury due to automatic engine start on vehicles with start/stop system.

- *On vehicles with activated start/stop system (this is indicated by a message in the instrument cluster display), the engine may start automatically on demand.*
- *Therefore it is important to ensure that the start/stop system is deactivated when performing repairs (switch off ignition, if required switch on ignition again).*

1.3 Safety precautions

Note the following if testers and measuring instruments have to be used during a road test:

WARNING

Accidents can be caused if the driver is distracted by test equipment while road-testing, or if test equipment is not properly secured.

Persons sitting in the front passenger's seat could be injured if the airbag is triggered in an accident.

- *The use of test equipment while driving causes distraction.*
- *There is an increased risk of injury if test equipment is not secured.*

◆ *Test equipment must always be secured on the rear seat with a strap and operated from the rear seat by a second person.*

To prevent injuries to persons and/or damage to the fuel injection and ignition system, the following must be noted:

WARNING

◆ *The fuel system operates under high pressure. The pressure in the high-pressure part of the injection system must be reduced to a residual pressure prior to opening the system* *⇒ page 3* *.*

◆ *A clean cloth must then be wrapped around the connection and the residual pressure dissipated by carefully loosening the connection.*

Caution

◆ *Observe notes on procedure for disconnecting the battery ⇒ Electrical system; Rep. Gr. 27 ; Battery; Disconnecting and connecting battery .*

Protected by copyright. Copying for private or commercial purposes, in part or in whole, is not permitted unless authorised by AUDI AG. AUDI AG does not guarantee or accept any liability with respect to the correctness of information in this document. Copyright by AUDI AG.

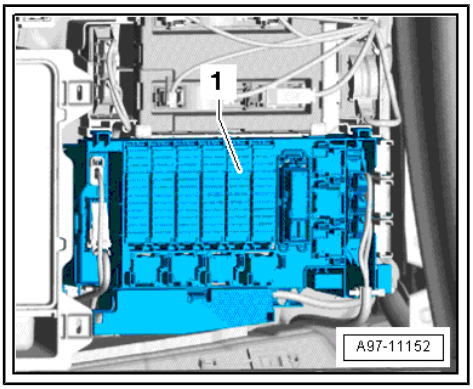

- If the battery is NOT disconnected, fuse in -relay and fuse holder in luggage compartment (right-side)- for the fuel pump relay -J17- / fuel pump control unit -J538- must be removed as a precautionary measure before opening the fuel system, because the fuel pump will otherwise be activated by the contact switch on the driver's door. For current assignment refer to ⇒ Current flow diagrams, Electrical fault finding and Fitting locations.
- Persons wearing a cardiac pacemaker must at all times maintain a safe distance from high-voltage components such as the ignition system and gas-discharge headlights.
- Do not open any fuel line connections while the engine is running.
- Always switch off the ignition before connecting or disconnecting injection or ignition system wiring or tester cables.
- If the engine is to be operated at cranking speed without it starting (e.g. compression test), unplug the connectors from the ignition coils and remove the fuse for the electric fuel pump.
- Certain tests may lead to a fault being detected by the control unit and stored. The event memory should therefore be interrogated and (if necessary) erased after completing the tests and any repair work that may be required.
- Always switch off the ignition before cleaning the engine.

Protected by copyright. Copying for private or commercial purposes, in part or in whole, is not permitted unless authorised by AUDI AG. AUDI AG does not guarantee or accept any liability with respect to the correctness and completeness of the information. Copyright by AUDI AG.

1.4 Rules for cleanliness when working on the injection system

Even small amounts of dirt can cause faults in the injection system. When working on the fuel supply/injection system, pay careful attention to the following basic rules:

- Carefully clean connection points and the surrounding area with engine cleaner or brake cleaner and dry thoroughly before opening.
- Plug open lines and connections with suitable protective caps immediately.
- Place parts that have been removed on a clean surface and cover them over. Do not use fluffy cloths.
- Only install clean components; replacement parts should only be unpacked immediately prior to installation. Do not use parts that have been previously unpacked and stored away loose (e.g. in toolboxes, etc.).
- When the system is open: Do not work with compressed air. Do not move the vehicle unless absolutely necessary.

1.5 Important: Required procedure prior to opening high-pressure injection system

Caution

The injection system consists of a high-pressure section (maximum approx. 140 bar) and a low-pressure section (approx. 7 bar).

Prior to opening the high-pressure section (e.g. when removing the high-pressure pump, fuel rail, injectors, fuel pipes or fuel pressure sender -G247-), the fuel pressure in the high-pressure section must be reduced to a residual pressure of approx. 7 bar. The procedure is described below.

Reducing fuel pressure in high-pressure section

– Connect a vehicle diagnostic tester.
– Start engine and run at idling speed.
– Select “Engine electronics” in vehicle self-diagnosis.
– Then select “Basic setting”.
– Select “Reducing fuel pressure in fuel rail” from the list.
– Then select “Measured values”.
– Select “Operating instructions” and “Fuel pressure” from the list.
– To activate basic setting, perform “Operating instructions” function.
– Observe fuel pressure displayed on vehicle diagnostic tester.
• Fuel pressure will drop to a specified value.
– Switch off engine with pedals depressed.

Protected by copyright. Copying for private or commercial purposes, in part or in whole, is not permitted unless authorised by AUDI AG. AUDI AG does not guarantee or accept any liability with respect to the correctness of information in this document. Copyright by AUDI AG.

WARNING

There is a risk of injury: avoid skin contact with fuel.

- *Wear safety goggles and protective clothing when opening the fuel system.*
- *Before opening the high-pressure section of the fuel system, place a clean cloth around the connection to catch escaping fuel.*

– The high-pressure system must be opened “immediately” after reducing the fuel pressure; wrap a clean cloth around the connection. Catch the escaping fuel.

Note

The pressure will increase again due to the effect of residual heat if the high-pressure system is not opened immediately.

Additional steps required

– Erase event memory and generate readiness code in engine control unit in “Guided Functions” mode.

1.6 Checking vacuum system

Special tools and workshop equipment required

- Hand vacuum pump -VAS 6213-

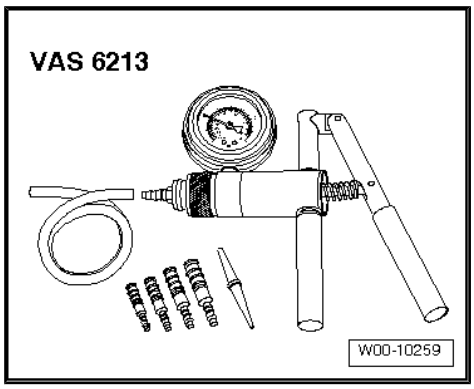

Procedure

– Check all vacuum lines in the complete vacuum system for:

- Cracks
- Traces of animal bites
- Kinked or crushed lines
- Lines porous or leaking

– Check vacuum line to solenoid valve and from solenoid valve to corresponding component.

– If a fault is stored in the event memory, check the vacuum lines leading to the corresponding component and also check the remaining vacuum lines leading to other components.

– If it is not possible to build up pressure with the hand vacuum pump -VAS 6213- or if the pressure drops again immediately, check the hand vacuum pump and connecting hoses for leaks.

Protected by copyright. Copying for private or commercial purposes, in part or in whole, is not permitted unless authorised by AUDI AG. AUDI AG does not guarantee or accept any liability with respect to the correctness of information in this document. Copyright by AUDI AG.

2 Technical data

Engine data	4.2 ltr. / 4V / 273 kW engine
Idling speed (not adjustable)	approx. 650 rpm [1)]
Fuel pressure after high-pressure pump	18 ... 120 bar
Fuel pressure before high-pressure pump	approx. 6 bar
• [1)] Depending on demands placed on engine control unit.	

Protected by copyright. Copying for private or commercial purposes, in part or in whole, is not permitted unless authorised by AUDI AG. AUDI AG does not guarantee or accept any liability with respect to the correctness of information in this document. Copyright by AUDI AG.

3 Overview of fitting locations

Engine compartment (right-side)

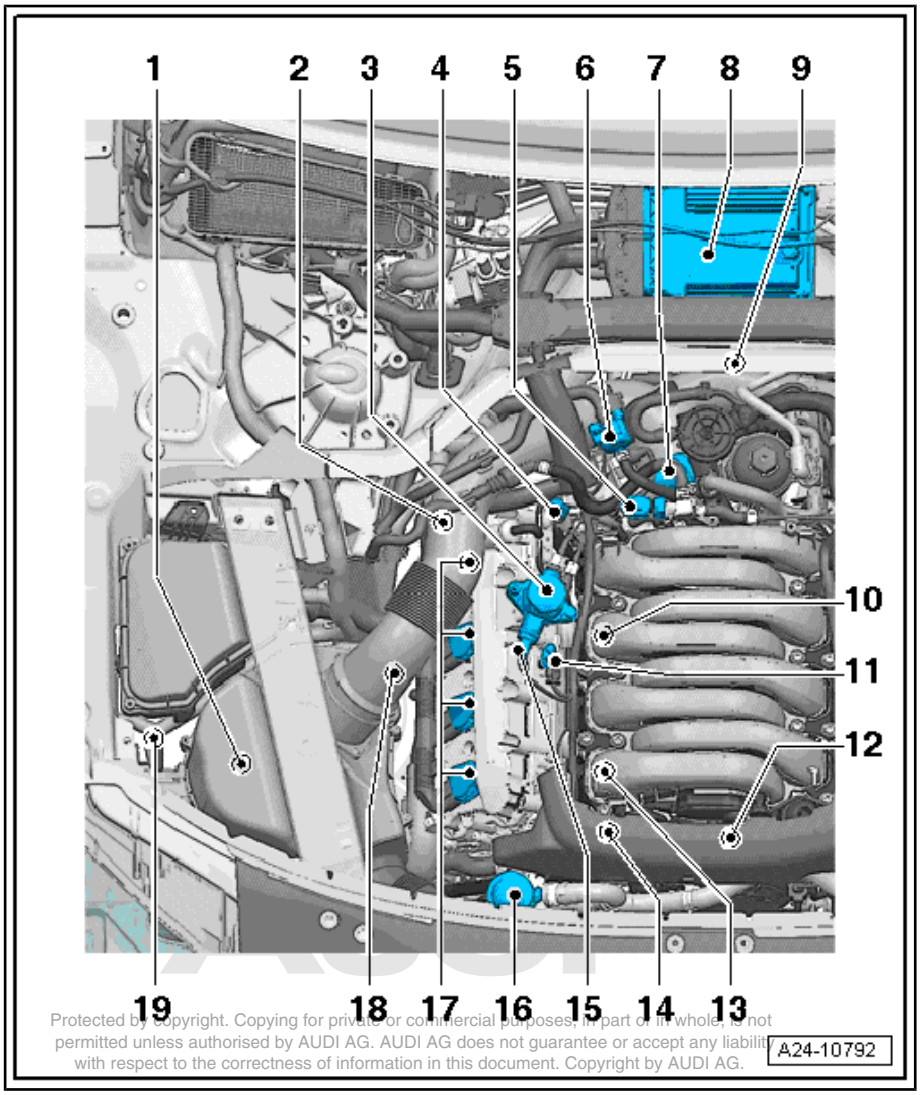

Protected by copyright. Copying for private or commercial purposes, in part or in whole, is not permitted unless authorised by AUDI AG. AUDI AG does not guarantee or accept any liability with respect to the correctness of information in this document. Copyright by AUDI AG.

1 - Variable intake manifold change-over valve -N335-

- ❑ Fitting location: refer to exploded view of air cleaner ⇒ page 17

2 - Exhaust camshaft control valve 1 -N318-

3 - High-pressure pump

- ❑ With fuel metering valve -N290-
- ❑ Removing and installing ⇒ page 43

4 - Camshaft control valve 1 - N205-

- ❑ Fitting location ⇒ page 13

5 - Fuel pressure sender for low pressure -G410-

- ❑ Fitting location ⇒ page 13

6 - Activated charcoal filter solenoid valve 1 -N80-

7 - Throttle valve module - J338-

- ❑ After renewing, perform “Adaption” in “Guided Functions” using vehicle diagnostic tester

8 - Engine control unit -J623-

- ❑ Fitting location ⇒ page 11
- ❑ Removing and installing ⇒ page 61

9 - Electrical connectors for Lambda probes, bank 1 and 2

- ❑ For Lambda probe before catalytic converter -G39- with Lambda probe heater -Z19-
- ❑ For Lambda probe after catalytic converter -G130- with Lambda probe 1 heater after catalytic converter -Z29-
- ❑ Fitting location ⇒ page 15
- ❑ For Lambda probe 2 before catalytic converter -G108- with Lambda probe 2 heater -Z28-
- ❑ For Lambda probe 2 after catalytic converter -G131- with Lambda probe 2 heater after catalytic converter -Z30-
- ❑ Fitting location ⇒ page 15

10 - Knock sensor 2 -G66-

- ❑ Fitting location ⇒ page 13
- ❑ Electrical connector ⇒ page 14
- ❑ Removing and installing ⇒ page 69
- ❑ 20 Nm

11 - Hall sender -G40-

- ❑ Fitting location ⇒ page 13

- ❑ Removing and installing ⇒ page 70

12 - Components at front of engine

- ❑ Fitting location ⇒ page 14

13 - Knock sensor 1 -G61-

- ❑ Fitting location ⇒ page 13
- ❑ Electrical connector ⇒ page 14
- ❑ Removing and installing ⇒ page 69
- ❑ 20 Nm

14 - Fuel pressure sender -G247-

- ❑ Fitting location ⇒ page 14
- ❑ 25 Nm
- ❑ Lubricate threads lightly with clean oil

15 - Fuel metering valve -N290-

16 - Combination valve for secondary air system

- ❑ Cylinder bank 1 (right-side)
- ❑ Removing, installing and testing ⇒ Rep. Gr. 26

17 - Ignition coils for cylinder bank 1

- ❑ Ignition coil 1 with output stage -N70-
- ❑ Ignition coil 2 with output stage -N127-
- ❑ Ignition coil 3 with output stage -N291-
- ❑ Ignition coil 4 with output stage -N292-
- ❑ Removing and installing ⇒ page 67

Protected by copyright. Copying for private or commercial purposes, in part or in whole, is not permitted unless authorised by AUDI AG. AUDI AG does not guarantee or accept any liability with respect to the correctness of information in this document. Copyright by AUDI AG.

18 - Hall sender 3 -G300-

- ❑ Secured to outside of cylinder head
- ❑ Fitting location ⇒ page 13
- ❑ Removing and installing ⇒ page 70

19 - Secondary air pump motor -V101-

- ❑ At front right, beneath headlight.
- ❑ For removing and installing refer to Engine, mechanics⇒ Rep. Gr. 26
- ❑ Fitting location ⇒ page 16

Engine compartment (left-side)

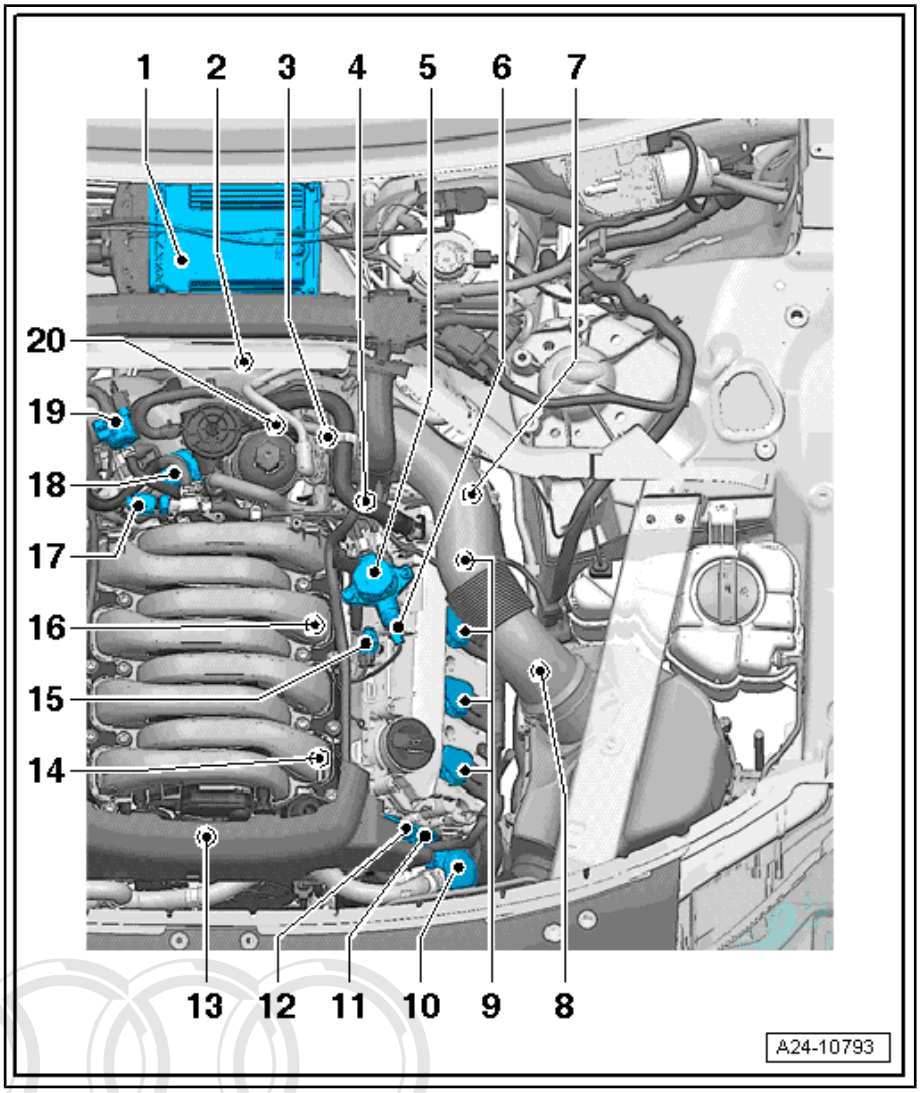

1 - Engine control unit -J623-

- ❑ Fitting location ⇒ page 11
- ❑ Removing and installing ⇒ page 61

2 - Electrical connectors

- ❑ For Lambda probe before catalytic converter -G39- with Lambda probe heater -Z19-
- ❑ For Lambda probe after catalytic converter -G130- with Lambda probe 1 heater after catalytic converter -Z29-
- ❑ Fitting location ⇒ page 15
- ❑ For Lambda probe 2 before catalytic converter -G108- with Lambda probe 2 heater -Z28-
- ❑ For Lambda probe 2 after catalytic converter -G131- with Lambda probe 2 heater after catalytic converter -Z30-
- ❑ Fitting location ⇒ page 15

3 - Coolant temperature sender -G62-

- ❑ Fitting location ⇒ page 12
- ❑ For removing and installing refer to Engine, mechanics⇒ Rep. Gr. 19

4 - Camshaft control valve 2 -N208-

- ❑ Fitting location ⇒ page 14

5 - High-pressure pump

- ❑ With fuel metering valve 2 -N402-
- ❑ Removing and installing ⇒ page 43

6 - Fuel metering valve 2 -N402-

- ❑ Combined with high-pressure pump in one unit

Protected by copyright. Copying for private or commercial purposes, in part or in whole, is not permitted unless authorised by AUDI AG. AUDI AG does not guarantee or accept any liability with respect to the correctness of information in this document. Copyright by AUDI AG.

7 - Exhaust camshaft control valve 2 -N319-

- ❑ Fitting location ⇒ page 13

8 - Hall sender 4 -G301-

- ❑ Fitting location ⇒ page 13
- ❑ Removing and installing ⇒ page 70

9 - Ignition coils for cylinder bank 2

- ❑ Ignition coil 5 with output stage -N323-
- ❑ Ignition coil 6 with output stage -N324-
- ❑ Ignition coil 7 with output stage -N325-
- ❑ Ignition coil 8 with output stage -N326-
- ❑ Fitting location ⇒ page 13
- ❑ Removing and installing ⇒ page 67

10 - Combination valve for secondary air system
- ❑ Cylinder bank 2 (left-side)
- ❑ Removing, installing and testing ⇒ Rep. Gr. 26

11 - Electrical connector for knock sensor 4 -G199-
- ❑ Fitting location ⇒ page 14

12 - Electrical connector for knock sensor 3 -G198-
- ❑ Fitting location ⇒ page 14

13 - Components at front of engine
- ❑ Fitting location ⇒ page 14

14 - Knock sensor 3 -G198-
- ❑ Fitting location ⇒ page 14
- ❑ Removing and installing ⇒ page 69
- ❑ 20 Nm

15 - Hall sender 2 -G163-
- ❑ Fitting location ⇒ page 14
- ❑ Removing and installing ⇒ page 70

16 - Knock sensor 4 -G199-
- ❑ Fitting location ⇒ page 14
- ❑ Removing and installing ⇒ page 69
- ❑ 20 Nm

17 - Fuel pressure sender for low pressure -G410-
- ❑ Fitting location ⇒ page 14

18 - Throttle valve module -J338-
- ❑ After renewing, perform “Adaption” in “Guided Functions” using vehicle diagnostic tester

19 - Activated charcoal filter solenoid valve 1 -N80-

20 - Oil pressure switch for reduced oil pressure -F378-
- ❑ Fitting location ⇒ page 14

A - Engine speed sender -G28-
- ❑ Fitting location ⇒ page 15

B - Valve for oil pressure control -N428-
- ❑ Fitting location ⇒ page 15
- ❑ For removing and installing refer to engine - mechanics ⇒ Rep. Gr. 17

B - Accelerator position sender -G79- and accelerator position sender 2 -G185-
- ❑ In footwell on accelerator pedal (both senders are accommodated in one housing)
- ❑ Fitting location ⇒ page 12
- ❑ For removing and installing refer to fuel supply system ⇒ Rep. Gr. 20

C - Kickdown switch -F8-
- ❑ In footwell on accelerator pedal
- ❑ For removing and installing refer to fuel supply system ⇒ Rep. Gr. 20

D - Brake light switch -F- / brake pedal switch -F47-
- ❑ In footwell on brake pedal
- ❑ For removing and installing refer to Brake system ⇒ Rep. Gr. 45

Protected by copyright. Copying for private or commercial purposes, in part or in whole, is not permitted unless authorised by AUDI AG. AUDI AG does not guarantee or accept any liability with respect to the correctness of information in this document. Copyright by AUDI AG.

E - Clutch pedal switch -F36-
- ❑ In footwell on clutch pedal

F - Fuel pump control unit -J538-
- ❑ Fitting location ⇒ page 12

- ❑ Removing, installing and testing ⇒ Rep. Gr. 20

G - Map-controlled engine cooling system thermostat -F265-

- ❑ Fitting location ⇒ page 16
- ❑ For removing and installing refer to Engine, mechanics⇒ Rep. Gr. 19

H - Coolant valve for gearbox -N488-

- ❑ Fitting location ⇒ page 12

I - Coolant valve for cylinder head -N489-

- ❑ Fitting location ⇒ page 13

J - Sender 1 for secondary air pressure -G609-

- ❑ Fitting location ⇒ page 16

K - Lambda probe before catalytic converter -G39- with Lambda probe heater -Z19-

- ❑ Fitting location ⇒ page 15
- ❑ Removing and installing ⇒ page 51
- ❑ 55 Nm

L - Lambda probe 2 before catalytic converter -G108- with Lambda probe 2 heater -Z28-

- ❑ Fitting location ⇒ page 15
- ❑ Removing and installing ⇒ page 56
- ❑ 55 Nm

M - Lambda probe after catalytic converter -G130- with Lambda probe 1 heater after catalytic converter -Z29-

- ❑ Fitting location ⇒ page 15
- ❑ Removing and installing ⇒ page 54
- ❑ 55 Nm

N - Lambda probe 2 after catalytic converter -G131- with Lambda probe 2 heater after catalytic converter -Z30-

- ❑ Fitting location ⇒ page 15
- ❑ Removing and installing ⇒ page 58
- ❑ 55 Nm

O - Control unit for fuel tank leak detection -J909-

- ❑ Only installed on USA vehicles
- ❑ Fitting location ⇒ page 16
- ❑ Removing and installing ⇒ Rep. Gr. 20

P - Tank pressure sensor -G400-

- ❑ Only installed on USA vehicles
- ❑ Fitting location ⇒ page 16
- ❑ Removing and installing ⇒ Rep. Gr. 20

Protected by copyright. Copying for private or commercial purposes, in part or in whole, is not permitted unless authorised by AUDI AG. AUDI AG does not guarantee or accept any liability with respect to the correctness of information in this document. Copyright by AUDI AG.

Fitting location of engine control unit -J623-

Removing and installing ⇒ page 61

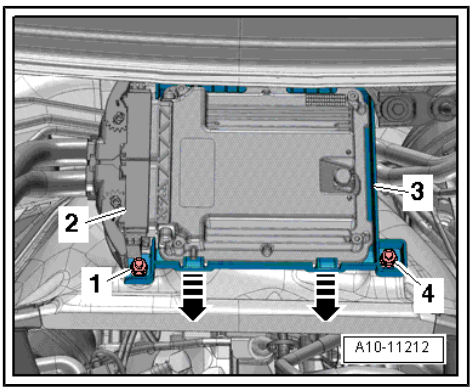

Fitting location of accelerator position sender -G79- / accelerator position sender 2 -G185-

Removing and installing, fuel supply system ⇒ Rep. Gr. 20

Note

The accelerator position sender -G79- and accelerator position sender 2 -G185- are integrated in the accelerator pedal module and cannot be renewed individually.

Protected by copyright. Copying for private or commercial purposes, in part or in whole, is not permitted unless authorised by AUDI AG. AUDI AG does not guarantee or accept any liability with respect to the correctness of information in this document. Copyright by AUDI AG.

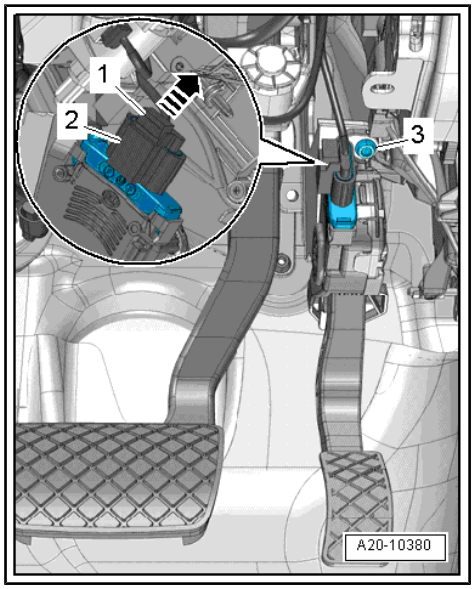

Fuel pump control unit -J538- -1-

Removing and installing, fuel supply system ⇒ Rep. Gr. 20

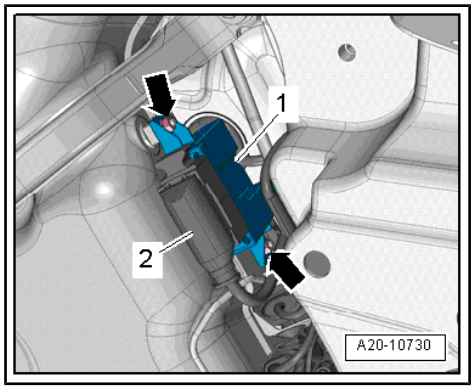

Fitting location of coolant temperature sender -G62- -1-

On rear coolant pipe (right-side)

Removing and installing ⇒ Rep. Gr. 19

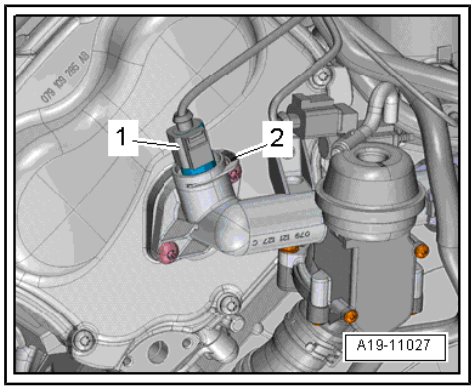

Coolant valve for gearbox -N488- -1-

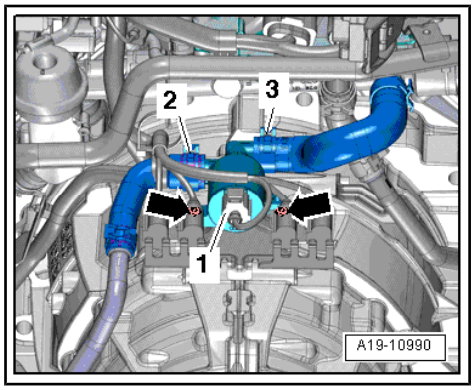

Thermostat

2 - Coolant temperature sender -G62-

3 - Coolant valve for cylinder head -N489-

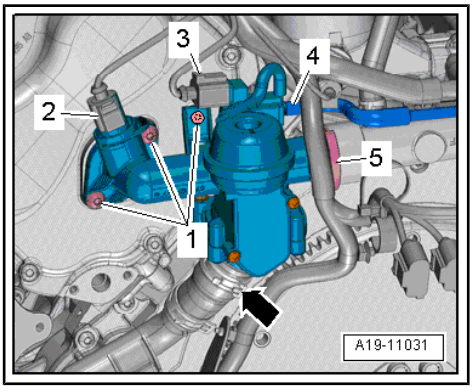

Fitting locations on cylinder bank 1 (right-side)

1 - Hall sender 3 -G300-

2 - Exhaust camshaft control valve 1 -N318-

3 - Ignition coil 4 with output stage -N292-

4 - Ignition coil 3 with output stage -N291-

5 - Ignition coil 2 with output stage -N127-

6 - Ignition coil 1 with output stage -N70-

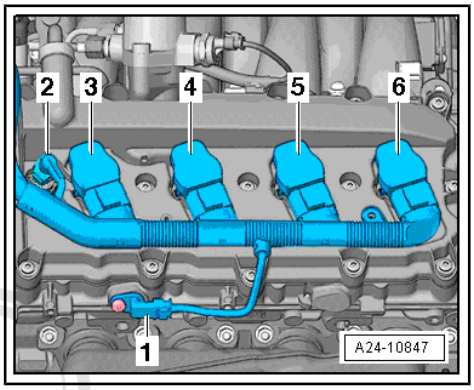

Fitting locations on cylinder bank 2 (left-side)

1 - Ignition coil 5 with output stage -N323-

2 - Ignition coil 6 with output stage -N324-

3 - Ignition coil 7 with output stage -N325-

4 - Ignition coil 8 with output stage -N326-

5 - Exhaust camshaft control valve 2 -N319-

6 - Hall sender 4 -G301-

Protected by copyright. Copying for private or commercial purposes, in pa
permitted unless authorised by AUDI AG. AUDI AG does not guarantee
with respect to the correctness of information in this document. Copyr

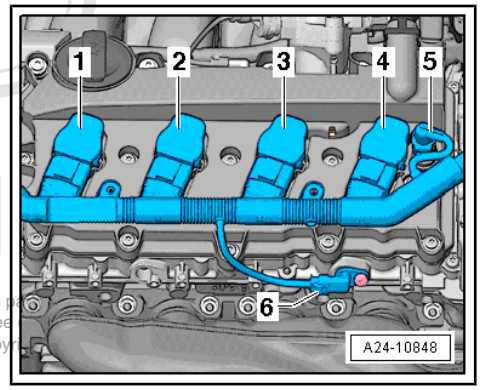

Fitting locations: components on inside of right cylinder head

1 - Intake manifold flap potentiometer -G336-

2 - Hall sender -G40-

3 - Fuel metering valve -N290-

4 - Camshaft control valve 1 -N205-

5 - Fuel pressure sender for low pressure -G410-

6 - Injector, cylinder 4 -N33-

7 - Injector, cylinder 3 -N32-

8 - Injector, cylinder 2 -N31-

9 - Injector, cylinder 1 -N30-

10 - Fuel pressure sender -G247-

11 - Intake manifold flap valve -N316-

12 - Knock sensor 1 -G61-

13 - Knock sensor 2 -G66-

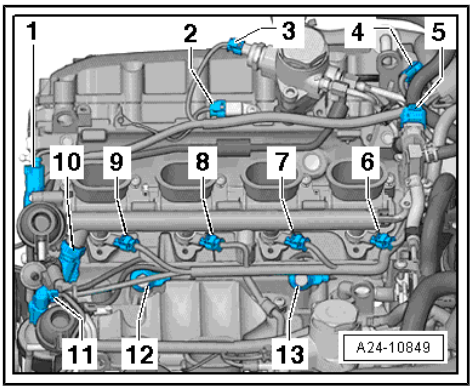

Fitting locations: components on inside of left cylinder head

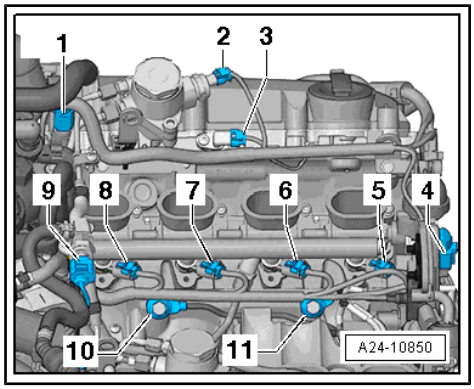

1 - Camshaft control valve 2 -N208-

2 - Fuel metering valve 2 -N402-

3 - Hall sender 2 -G163-

4 - Intake manifold flap potentiometer 2 -G512-

5 - Injector, cylinder 5 -N83-

6 - Injector, cylinder 6 -N84-

7 - Injector, cylinder 7 -N85-

8 - Injector, cylinder 8 -N86-

9 - Fuel pressure sender for low pressure -G410-

10 - Knock sensor 4 -G199-

11 - Knock sensor 3 -G198-

Fitting location: at front of engine

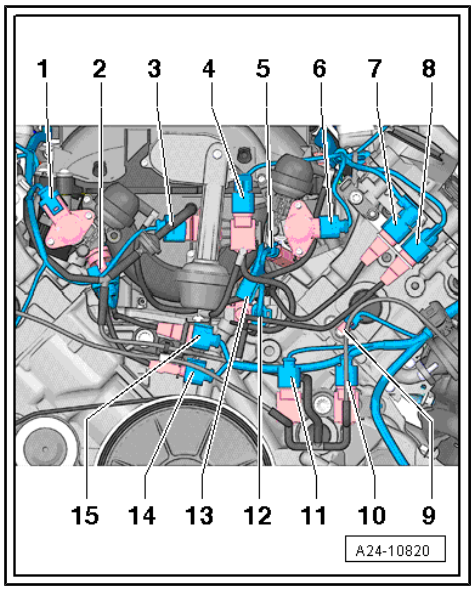

1 - Intake manifold flap potentiometer -G336-

2 - Fuel pressure sender -G247-

3 - Intake manifold pressure sender -G71- with intake air temperature sender -G42-

4 - Variable intake manifold change-over valve -N156-

5 - Electrical connector for injector for cylinder 5 -N83-

6 - Intake manifold flap potentiometer 2 -G512-

7 - Electrical connector for knock sensor 3 -G198-

8 - Electrical connector for knock sensor 4 -G199-

9 - Temperature sender for engine temperature regulation -G694-

10 - Secondary air inlet valve 2 -N320-

11 - Secondary air inlet valve -N112-

12 - Intake manifold flap valve -N316-

13 - Oil pressure switch -F22-

14 - Electrical connector for knock sensor 2 -G66-

15 - Electrical connector for knock sensor 1 -G61-

Protected by copyright. Copying for private or commercial purposes, in part or in whole, is not permitted unless authorised by AUDI AG. AUDI AG does not guarantee or accept any liability with respect to the correctness of information in this document. Copyright by AUDI AG.

Oil pressure switch for reduced oil pressure -F378-

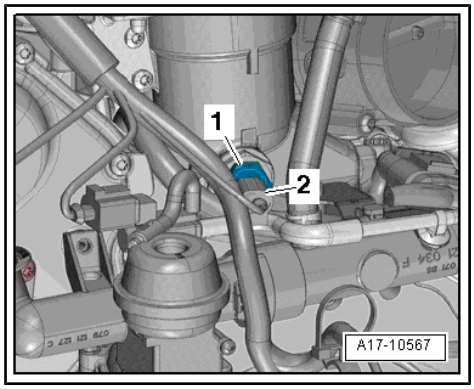

Fitting location of Lambda probes on cylinder bank 1 (right-side)

1 - Electrical connector for Lambda probe after catalytic converter -G130-

2 - Electrical connector for Lambda probe -G39-

3 - Lambda probe after catalytic converter -G130-

4 - Lambda probe -G39-

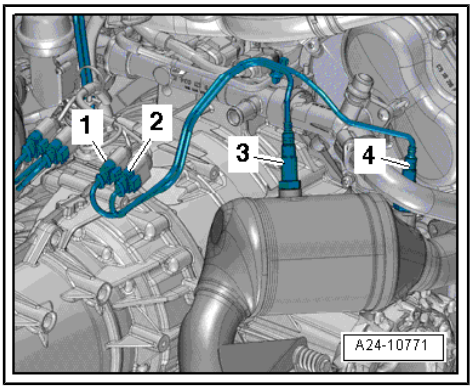

Fitting location of Lambda probes on cylinder bank 2 (left-side)

1 - Lambda probe 2 -G108-

2 - Lambda probe 2 after catalytic converter -G131-

3 - Electrical connector for Lambda probe 2 -G108-

4 - Electrical connector for Lambda probe 2 after catalytic converter -G131-

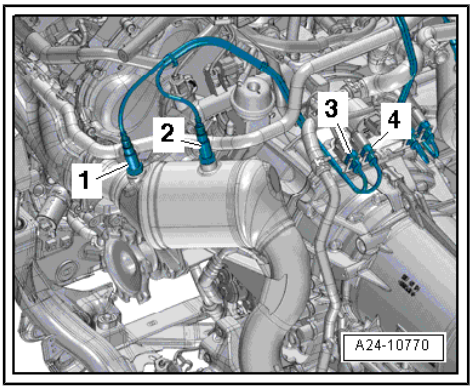

Engine speed sender -G28- -2-

Protected by copyright. Copying for private or commercial purposes, in part or in whole, is not permitted unless authorised by AUDI AG. AUDI AG does not guarantee or accept any liability with respect to the correctness of information in this document. Copyright by AUDI AG.

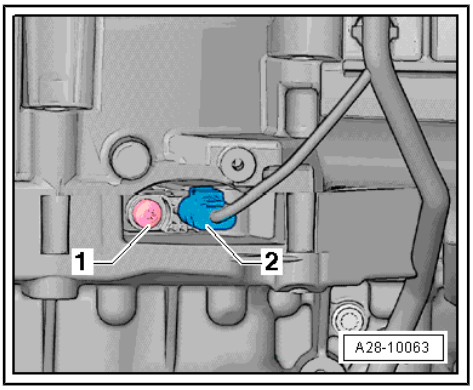

Valve for oil pressure control -N428-

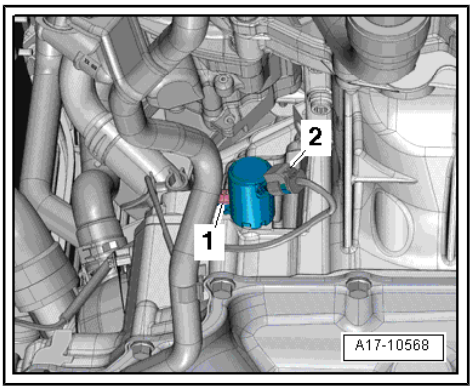

Map-controlled engine cooling system thermostat -F265-

♦ On engine (front left)

1 - Map-controlled engine cooling system thermostat -F265-

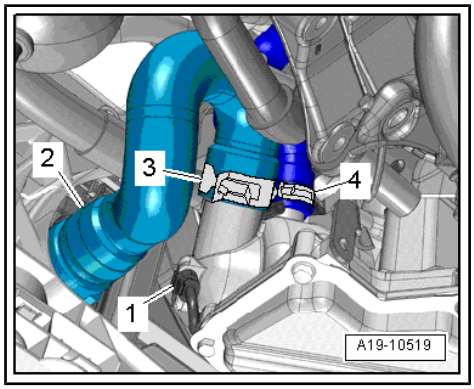

Sender 1 for secondary air pressure -G609- -2-

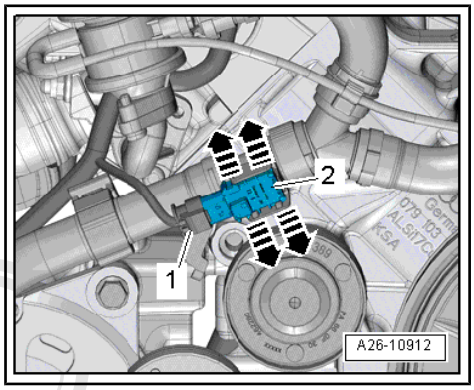

Secondary air pump motor -V101-

At front right, beneath headlight

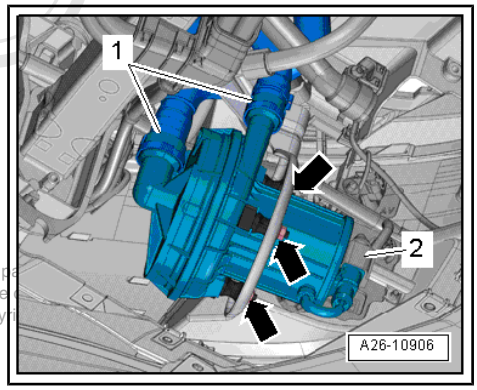

Protected by copyright. Copying for private or commercial purposes, in p
permitted unless authorised by AUDI AG. AUDI AG does not guarantee
with respect to the correctness of information in this document. Copy

Fuel tank leak detection system

1 - Tank pressure sensor -G400-

Fitting location: in wheel housing liner (rear right) in area of fuel filler neck

2 - Control unit for fuel tank leak detection -J909-

Fitting location: on fuel tank (rear right)

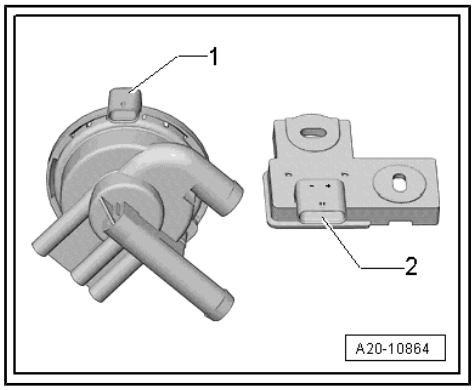

4 Air cleaner

4.1 Air cleaner - exploded view

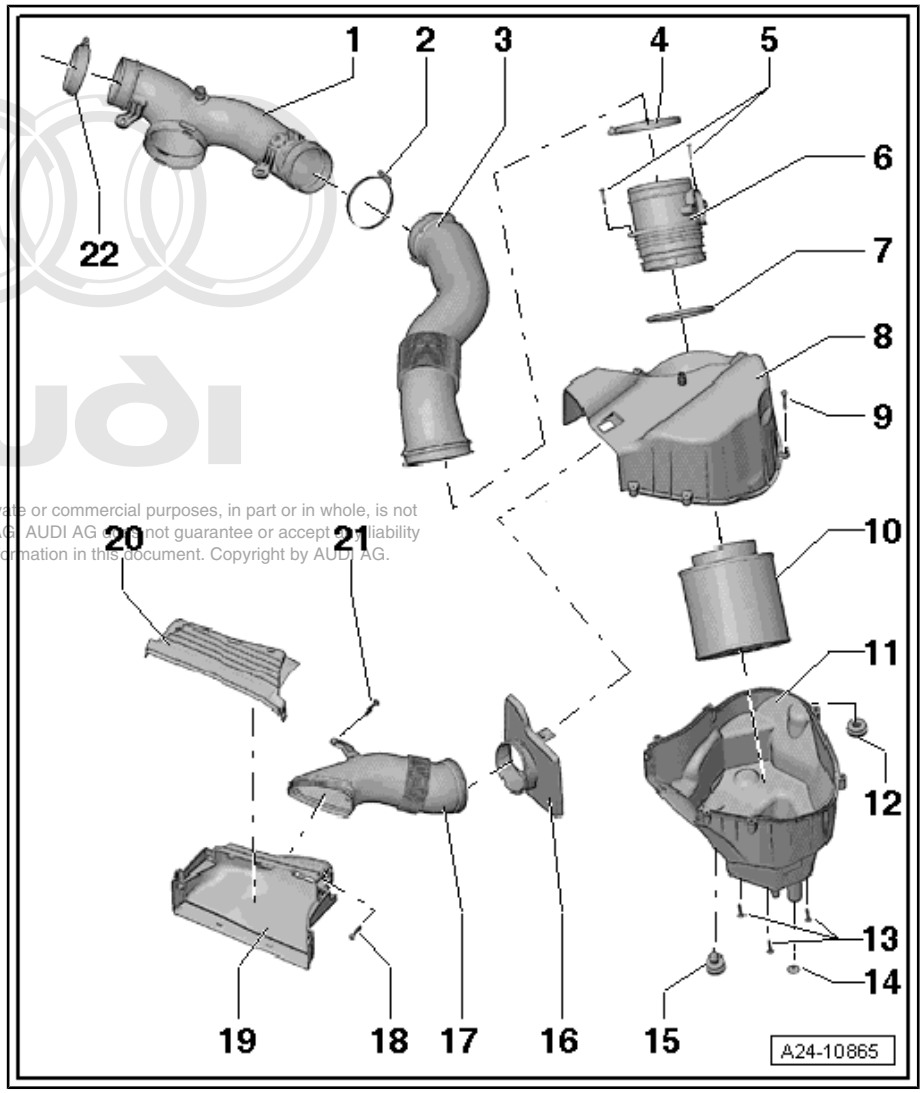

1 - Intake connecting pipe

2 - Hose clip

3 - Air hose

4 - Hose clip

5 - Bolt
- ❑ 1.5 Nm

6 - Adapter

7 - O-ring
- ❑ Renew if damaged

8 - Air cleaner (top section)
- ❑ Clean any salt residue, leaves and dirt out of air cleaner (top section)

Protected by copyright. Copying for private or commercial purposes, in part or in whole, is not permitted unless authorised by AUDI AG. AUDI AG does not guarantee or accept any liability with respect to the correctness of information in this document. Copyright by AUDI AG.

9 - Bolts
- ❑ 1.5 Nm

10 - Air filter element
- ❑ Always use genuine part for air filter element
- ❑ Maintenance intervals ⇒ Maintenance ; Booklet 410
- ❑ Removing and installing ⇒ page 18
- ❑ Also clean snow screen (if fitted)

11 - Air cleaner (bottom section)
- ❑ Clean any salt residue, leaves and dirt out of air cleaner (bottom section)
- ❑ Important: Check for dirt in water drain and clean if necessary

12 - Rubber grommet

13 - Bolt
- ❑ 1.5 Nm

14 - Flutter valve for water drain
- ❑ Clean any leaves and dirt out of water drain

15 - Rubber grommet

16 - Cover

17 - Air duct
- ❑ Clean dirt and leaves out of air duct

18 - Bolt
- ❑ 1.5 Nm

19 - Air duct

- ❑ To lock carrier
- ❑ Clean dirt and leaves out of air duct

20 - Cover for air duct

- ❑ To lock carrier

21 - Bolt

- ❑ 1.5 Nm

4.2 Removing and installing engine cover panel

Removing

– Carefully pull engine cover panel off four retaining pins one after the other -arrows-. Do not jerk the cover panel away, and do not try to pull on one side only.

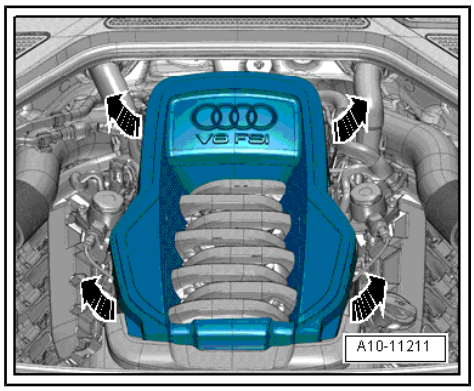

Installing

– To avoid damage, do not strike the engine cover panel with your fist or with any kind of tool.

– Press engine cover panel with both hands into the rubber grommets at the rear and then into the grommets at the front.

4.3 Removing and installing air filter element

Removing

Note

The procedure for removal is described on air cleaner housing (right-side).

– Remove lock carrier cover -2-.

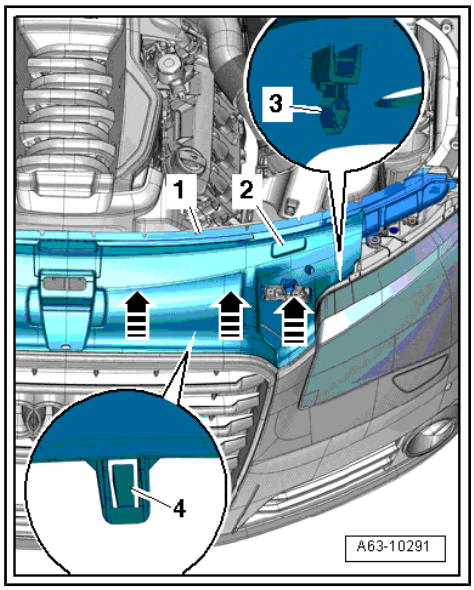

Protected by copyright. Copying for private or commercial purposes, in part or in whole, is not permitted unless authorised by AUDI AG. AUDI AG does not guarantee or accept any liability with respect to the correctness of information in this document. Copyright by AUDI AG.

– Remove bolts -1 and 3- and take out longitudinal member -2-.

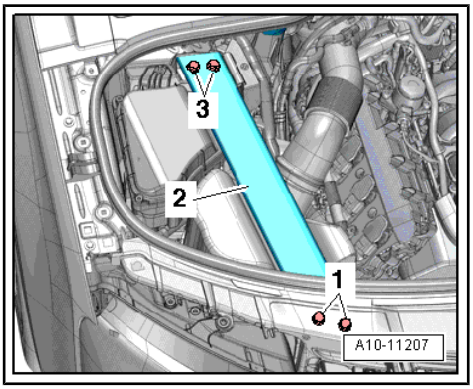

– Open hose clip -1- and disconnect air intake hose from air cleaner housing.
– Release retainer and disconnect air duct from front of air cleaner housing.
– Pull air cleaner housing slightly upwards and disconnect air hose for secondary air pump from bottom of air cleaner housing.

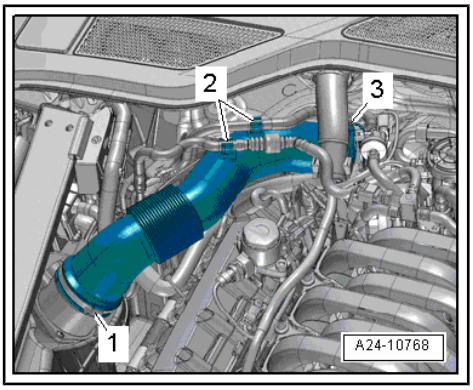

Note

The air hose for the secondary air pump must only be disconnected from the air cleaner housing on the right side.

– Lift out entire air cleaner housing.
– Unbolt air cleaner housing (top section).

– Turn air filter element in anti-clockwise direction -arrow A- and detach it.

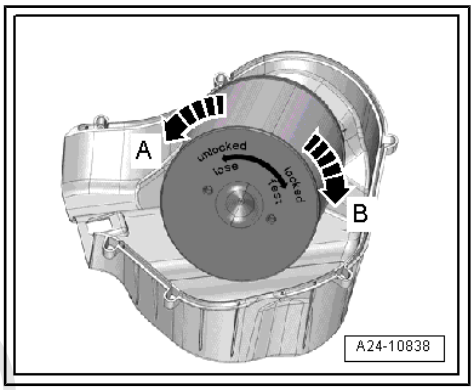

Installing

Note

- *Always use genuine part for air filter element.*
- *The air cleaner housing MUST be clean.*
- *Secure all hose connections with the correct type of hose clips (same as original equipment) ⇒ Parts catalogue.*
- *Please observe requirements for disposal.*

– Blow out water drain (small hole in bottom section of air cleaner -1-) with compressed air.
– Clean salt residue, dirt and leaves out of air cleaner housing (top and bottom sections); use a vacuum cleaner if necessary.
– Check for salt residue, dirt and leaves in air intake hose (engine intake side).
– Check for dirt and leaves in air duct going from lock carrier to air cleaner housing.
– Make sure that O-ring is not damaged when installing air filter element (renew if damaged).

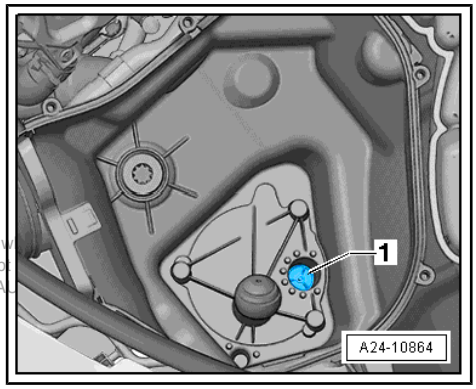

Protected by copyright. Copying for private or commercial purposes, in part or in w
permitted unless authorised by AUDI AG. AUDI AG does not guarantee or accep
with respect to the correctness of information in this document. Copyright by AU

– When installing air filter element, check that it is properly centred in retainer in air cleaner (top section).
– Turn air filter element in clockwise direction -arrow B- so that it engages.
– Fit the top section of the air cleaner carefully on the bottom section, without using force. Risk of air leak.

The remaining installation steps are carried out in the reverse sequence.

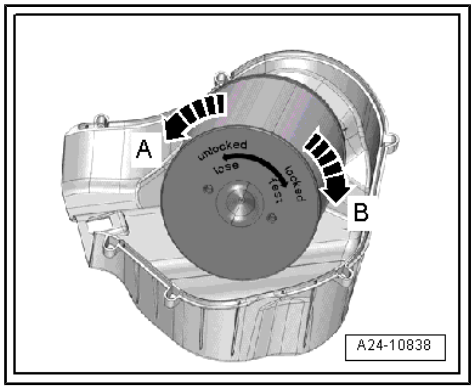

4.4 Removing and installing air cleaner housing

Removing

Note

The procedure for removal is described on air cleaner housing (right-side).

– Remove lock carrier cover -2-.

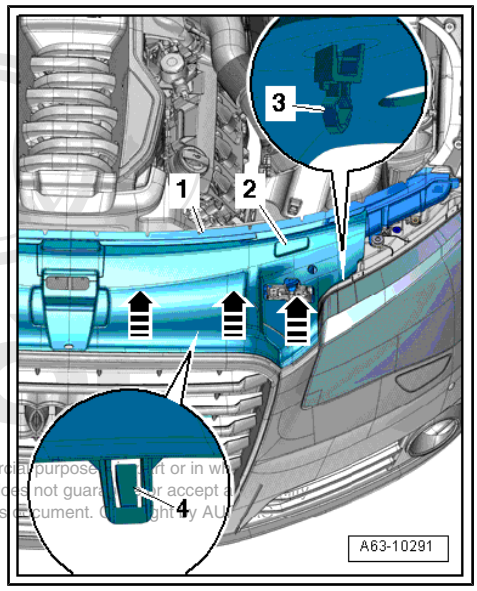

Protected by copyright. Copying for private or commercial purposes, in part or in whole, is not permitted unless authorised by AUDI AG. AUDI AG does not guarantee or accept any liability with respect to the correctness of information in this document. Copyright by AUDI AG.

– Remove bolts -1 and 3- and take out longitudinal member -2-.

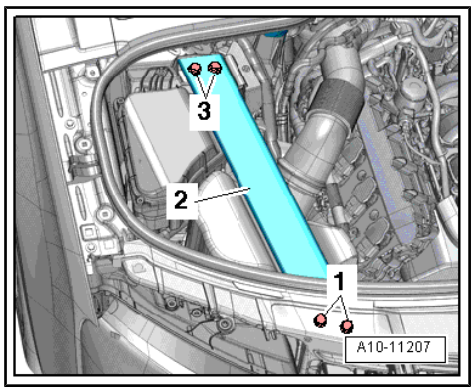

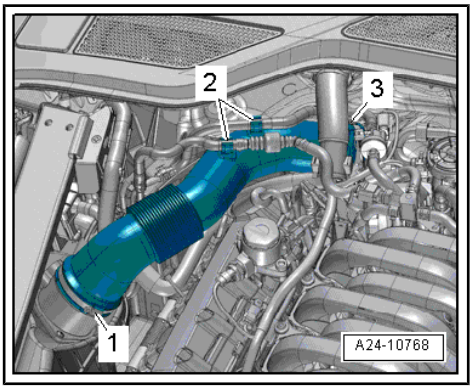

– Open hose clip -1- and disconnect air intake hose from air cleaner housing.
– Release retainer and disconnect air duct from front of air cleaner housing.
– Pull air cleaner housing slightly upwards and disconnect air hose for secondary air pump from bottom of air cleaner housing.

Note

The air hose for the secondary air pump must only be disconnected from the air cleaner housing on the right side.

– Lift out entire air cleaner housing.

Installing

Install in reverse order.

Note

Make sure air hose for secondary air pump is secured properly.

Protected by copyright. Copying for private or commercial purposes, in part or in whole, is not permitted unless authorised by AUDI AG. AUDI AG does not guarantee or accept any liability with respect to the correctness of information in this document. Copyright by AUDI AG.

5 Intake manifold and injectors

5.1 Intake manifold - exploded view

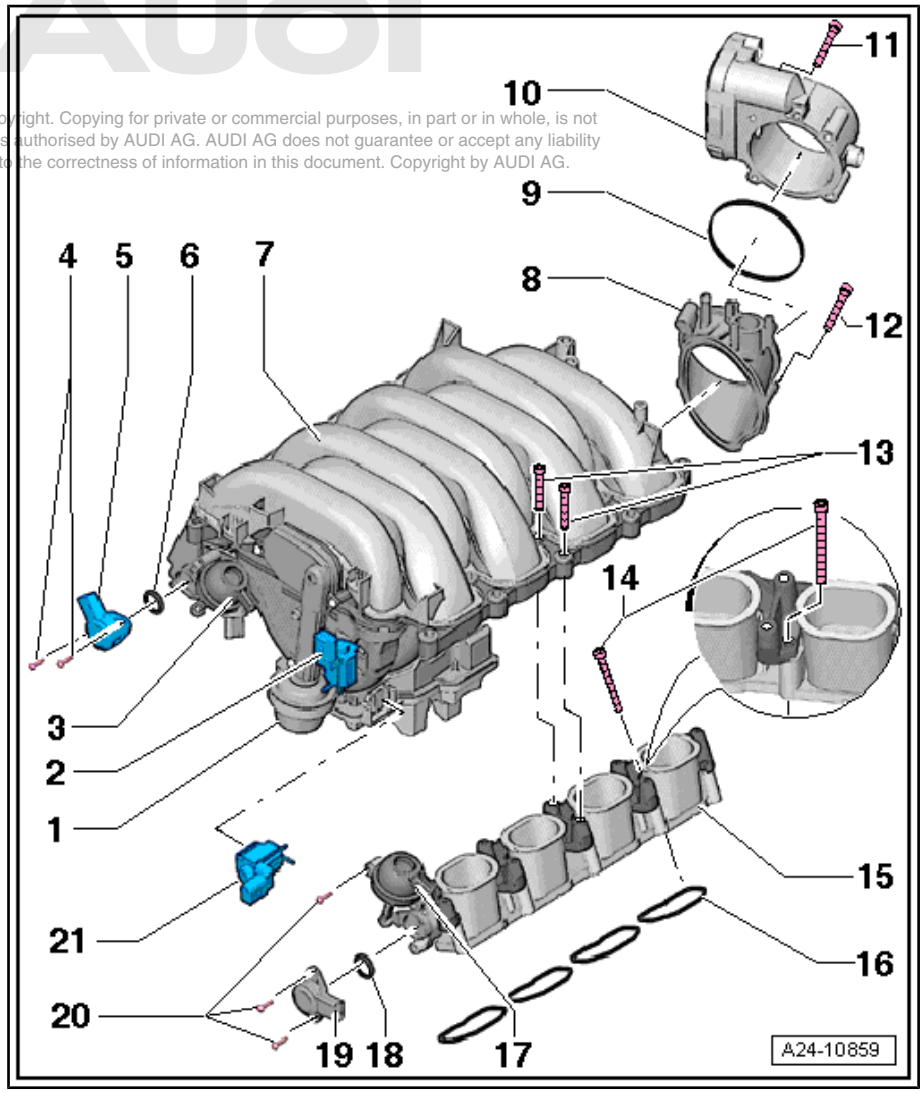

Protected by copyright. Copying for private or commercial purposes, in part or in whole, is not permitted unless authorised by AUDI AG. AUDI AG does not guarantee or accept any liability with respect to the correctness of information in this document. Copyright by AUDI AG.

1 - Vacuum unit for intake manifold change-over

2 - Variable intake manifold change-over valve -N156-

3 - Vacuum unit for intake manifold flaps (cylinder bank 1)

- ❑ For CVTS tumble flaps (cylinder bank 1)

4 - Bolt

- ❑ 2.5 Nm

5 - Intake manifold flap potentiometer -G336-

- ❑ Cylinder bank 1
- ❑ After renewing, perform “Adaption” in “Guided Functions” using vehicle diagnostic tester

6 - Seal

- ❑ Renew if damaged
- ❑ Open side faces towards potentiometer

7 - Intake manifold

- ❑ Removing and installing ⇒ page 23

8 - Intermediate flange

9 - O-ring

- ❑ Renew

10 - Throttle valve module - J338-

- ❑ Removing and installing ⇒ page 27
- ❑ After renewing, perform “Adaption” in “Guided Functions” using vehicle diagnostic tester

11 - Bolt

- ❑ 9 Nm

12 - Bolt

- ❑ 9 Nm

13 - Bolts for intake manifold

- ❑ For tightening torque and tightening sequence, refer to ⇒ page 23

14 - Bolts for intake manifold (bottom section)

- ❑ For tightening torque and tightening sequence, refer to ⇒ page 23

15 - Intake manifold (bottom section)

16 - Intake manifold gasket

- ❑ Renew

17 - Vacuum unit for intake manifold flaps (cylinder bank 2)

- ❑ For CVTS tumble flaps (cylinder bank 2)

18 - Seal

- ❑ Renew if damaged
- ❑ Open side faces towards potentiometer

19 - Intake manifold flap potentiometer 2 -G512-

- ❑ Cylinder bank 2
- ❑ After renewing, perform “Adaption” in “Guided Functions” using vehicle diagnostic tester

20 - Bolt

- ❑ 2.5 Nm

21 - Intake manifold flap valve -N316-

Tightening torque and tightening sequence for intake manifold

– Tighten bolts for intake manifold in the sequence -1 to 16-.

- ♦ Tighten initially to 8 Nm
- ♦ Subsequently tighten to 11 Nm

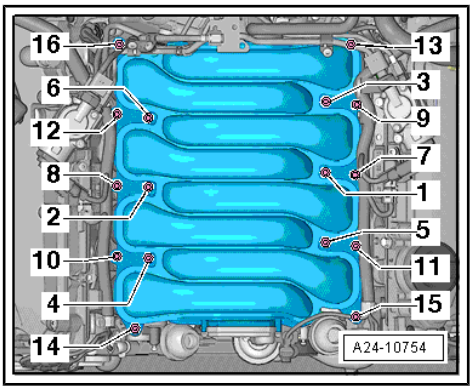

Intake manifold (bottom section) - tightening torque

– Tighten bolts -arrows- for intake manifold (bottom section) in diagonal sequence and in stages.

- 10 Nm

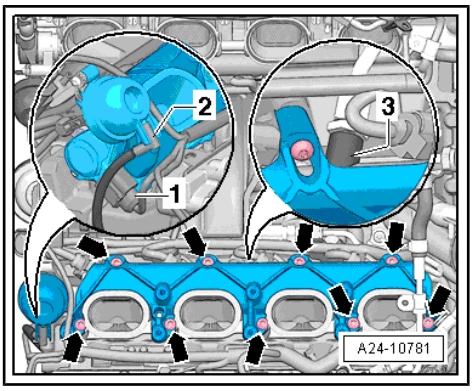

5.2 Removing and installing intake manifold

Special tools and workshop equipment required

- ♦ Torque wrench -V.A.G 1331-
- ♦ Tool insert, AF 17 -V.A.G 1331/6-
- ♦ Socket insert AF 14, flared ring spanner -V.A.G 1331/8-
- ♦ Assembly tool -T10118-

Protected by copyright. Copying for private or commercial purposes, in part or in whole, is not permitted unless authorised by AUDI AG. AUDI AG does not guarantee or accept any liability with respect to the correctness of information in this document. Copyright by AUDI AG.

Removing

WARNING

- *The fuel system operates under high pressure. The pressure in the high-pressure part of the injection system must be reduced to a residual pressure prior to opening the system* *⇒ page 3* *.*
- *A clean cloth must then be wrapped around the connection and the residual pressure dissipated by carefully loosening the connection.*

Note

All cable ties which are released or cut open when removing must be fitted in the same position when installing.

– Disconnect earth wire at battery with ignition switched off.
– Pull off engine cover panel.
– Pull cover -1- towards front and lift off.

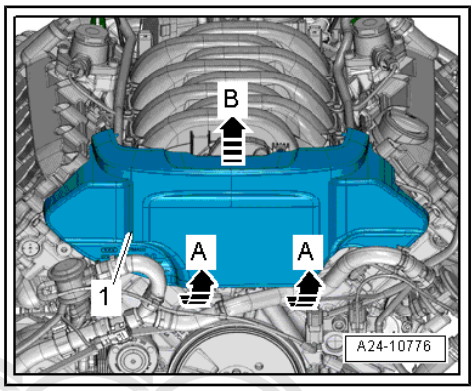

– Unplug electrical connectors -3 and 4-.
– Detach vacuum line from intake manifold (front).

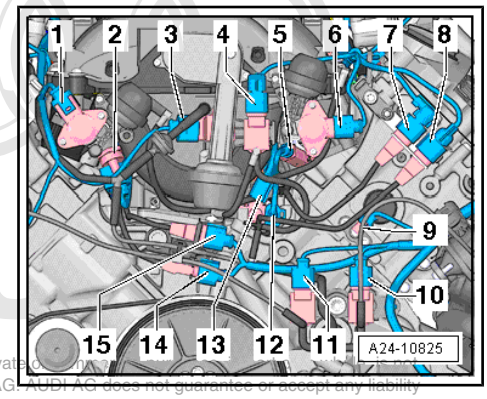

Protected by copyright. Copying for private or commercial purposes, in part or in whole, is not permitted unless authorised by AUDI AG. AUDI AG does not guarantee or accept any liability with respect to the correctness of information in this document. Copyright by AUDI AG.

– Loosen hose clips -1 and 2- and remove air pipe (right-side).

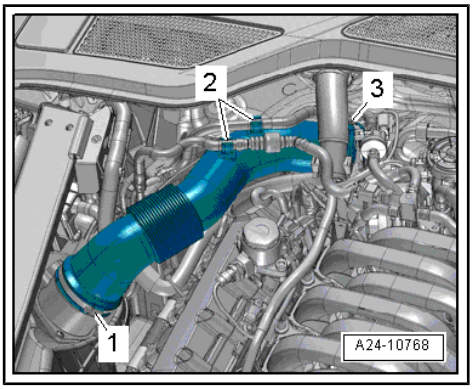

– Loosen hose clips -1 and 2- and remove air pipe (left-side).
– Disconnect vacuum lines -arrows- from air pipe.

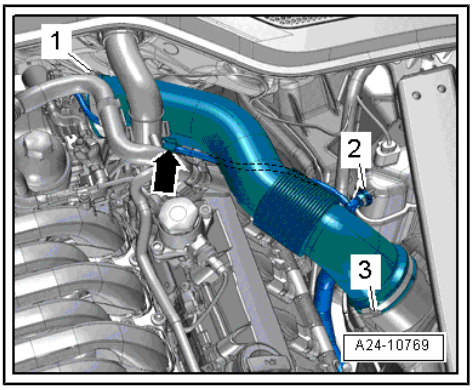

– Remove bolts -4- and move crankcase breather to one side.
– Detach hose -2- from activated charcoal filter solenoid valve 1 -N80- .
– Unplug electrical connectors -1 and 3-.

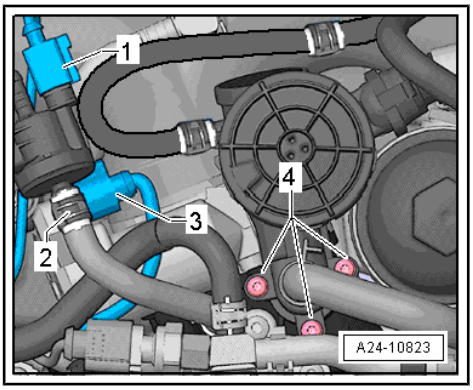

– Detach activated charcoal filter solenoid valve 1 -N80- from bracket and move it clear to the side.
– Release hose clip on intake connecting pipe.

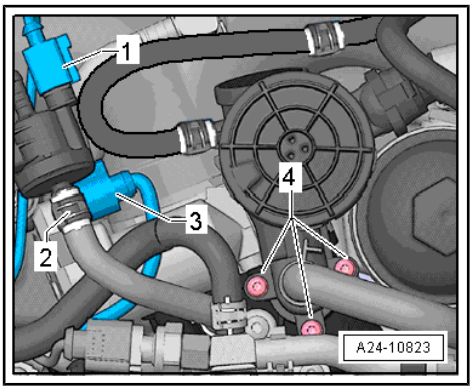

Protected by copyright. Copying for private or commercial purposes, in part or in whole, is not permitted unless authorised by AUDI AG. AUDI AG does not guarantee or accept any liability with respect to the correctness of information in this document. Copyright by AUDI AG.

– Remove both bolts -arrows- from intake connecting pipe.
– Remove both retaining clips on fuel lines -1 and 2-.
– Press intake connecting pipe off throttle valve module -J338- to the rear.

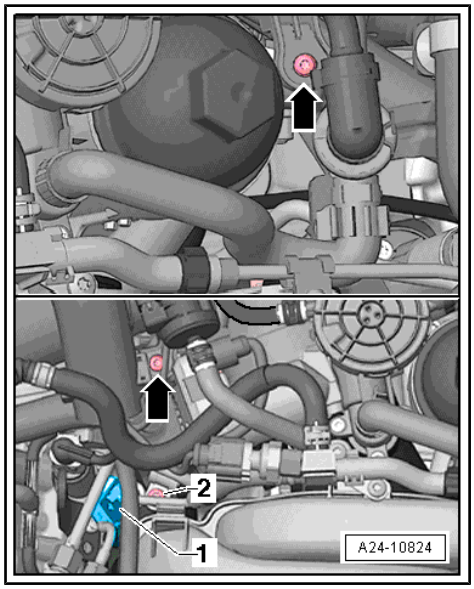

– Disconnect fuel lines -1 and 4- at high-pressure pumps.
– Remove bolts -2 and 3-.

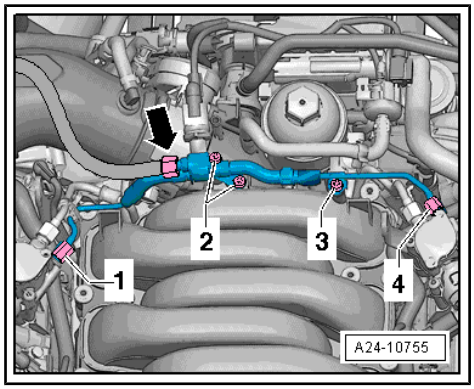

– Remove bolts for intake manifold in the sequence -16 to 1-.
– Remove intake manifold from engine compartment.

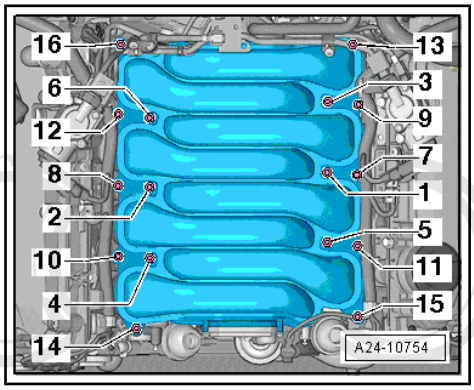

Note

Seal intake ports on cylinder heads with clean cloths.

Installing

Note

- *Renew gaskets, seals and O-rings.*
- *Secure all hose connections with the correct type of hose clips (same as original equipment) ⇒ Parts catalogue.*
- *Fit all cable ties in the original positions when installing.*

– Check seals in intake manifold for damage and make sure they are positioned correctly.
– Make sure that hoses and wires are not trapped.

Protected by copyright. Copying for private or commercial purposes, in part or in whole, is not permitted unless authorised by AUDI AG. AUDI AG does not guarantee or accept any liability with respect to the correctness of information in this document. Copyright by AUDI AG.

– Tighten bolts for intake manifold in the sequence -1 to 16-.

• Tightening torques: refer to exploded view of intake manifold ⇒ page 22 .

• Tightening torques: refer to exploded view of injectors and fuel rail ⇒ page 31 .

The remaining installation steps are carried out in the reverse sequence.

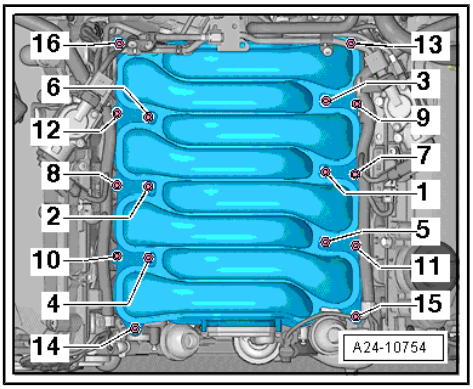

Note

♦ *The connections of the high-pressure pipes must not be damaged.*

♦ *Do not attempt to bend high-pressure pipes to a different shape.*

– Tighten union nuts on high-pressure pipes hand-tight initially.

– Install retaining clips for high-pressure pipes.

– Ensure that high-pressure pipes are not under tension.

– To tighten union nuts (14 mm) for high-pressure pipes, use torque wrench -V.A.G 1331- with socket insert AF 14, flared ring spanner -V.A.G 1331/8- .

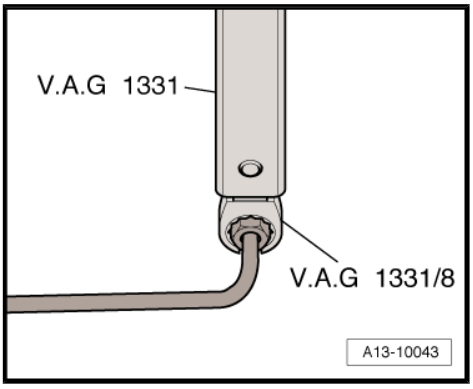

– To tighten union nuts (17 mm) for high-pressure pipes, use torque wrench -V.A.G 1331- with tool insert (17 mm) -V.A.G 1331/6- .

• Tightening torque: refer to exploded view of high-pressure pump ⇒ page 41 .

– Observe notes on procedures required after connecting battery ⇒ Rep. Gr. 27 .

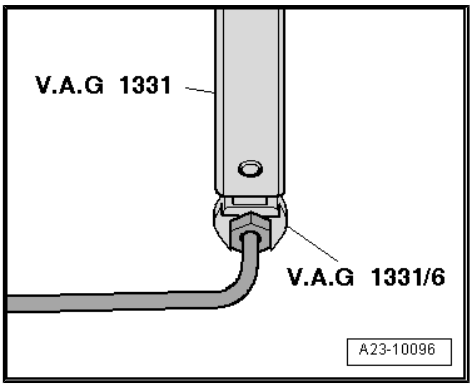

5.3 Removing and installing throttle valve module -J338-

Removing

Protected by copyright. Copying for private or commercial purposes, in part or in whole, is not permitted unless authorised by AUDI AG. AUDI AG does not guarantee or accept any liability with respect to the correctness of information in this document. Copyright by AUDI AG.

– Remove engine cover panel.

– Unclip fuel supply pipe -2-.

– Loosen hose clips -1 and 3- and remove air pipe (right-side).

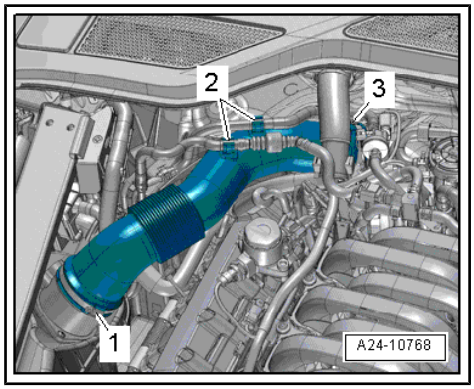

– Loosen hose clips -1 and 3- and remove air pipe (left-side).
– Disconnect vacuum lines -arrows- from intake connecting pipe.

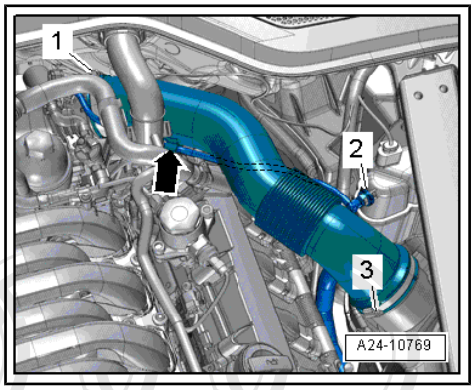

– Remove bolts -4- and detach crankcase breather.
– Detach hose -2- from activated charcoal filter solenoid valve 1 -N80- .
– Unplug electrical connectors -1 and 3-.

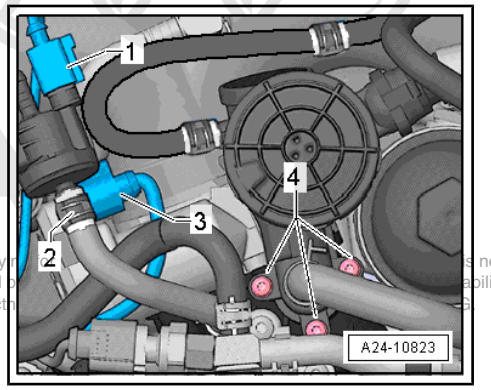

Protected by copyright. Copy
permitted unless authorised
with respect to the correct
s not
ability

– Detach activated charcoal filter solenoid valve 1 -N80- from bracket and move it clear to the side.
– Release hose clip on intake connecting pipe.

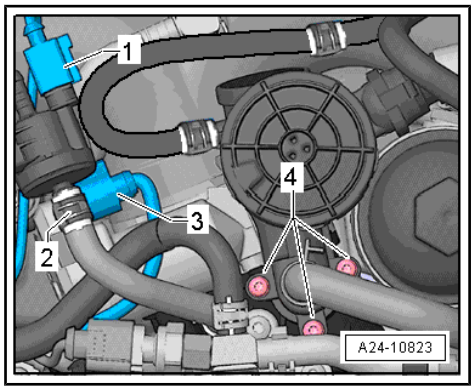

– Remove both bolts -arrows- from intake connecting pipe.
– Guide intake connecting pipe out from above.

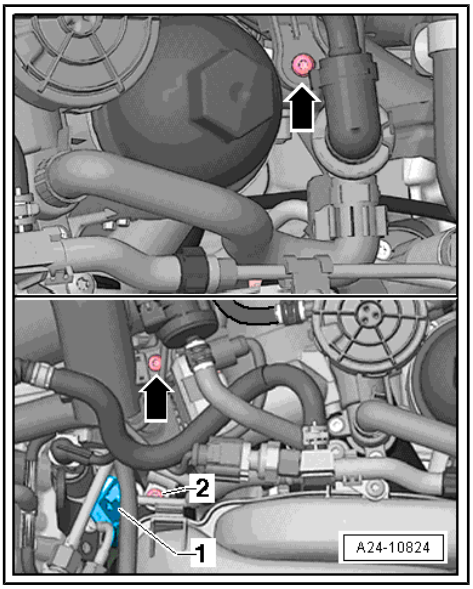

– Unscrew bolts -arrows- and remove throttle valve module - J338- .

Installing

Install in reverse order.

- Tightening torques: intake manifold - exploded view ⇒ page 22 .

After renewing, perform “Adaption” in “Guided Functions” using vehicle diagnostic tester.

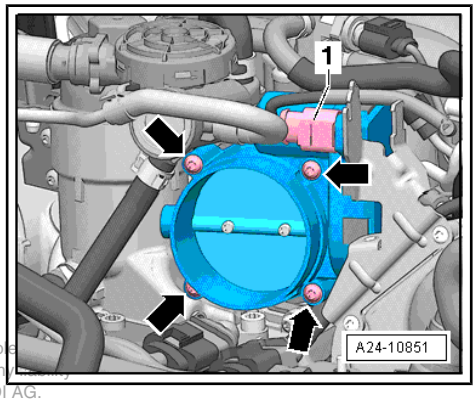

Protected by copyright. Copying for private or commercial purposes, in part or in whole, is not permitted unless authorised by AUDI AG. AUDI AG does not guarantee or accept any liability with respect to the correctness of information in this document. Copyright by AUDI AG.

5.4 Intake manifold (bottom section) with fuel rail - exploded view

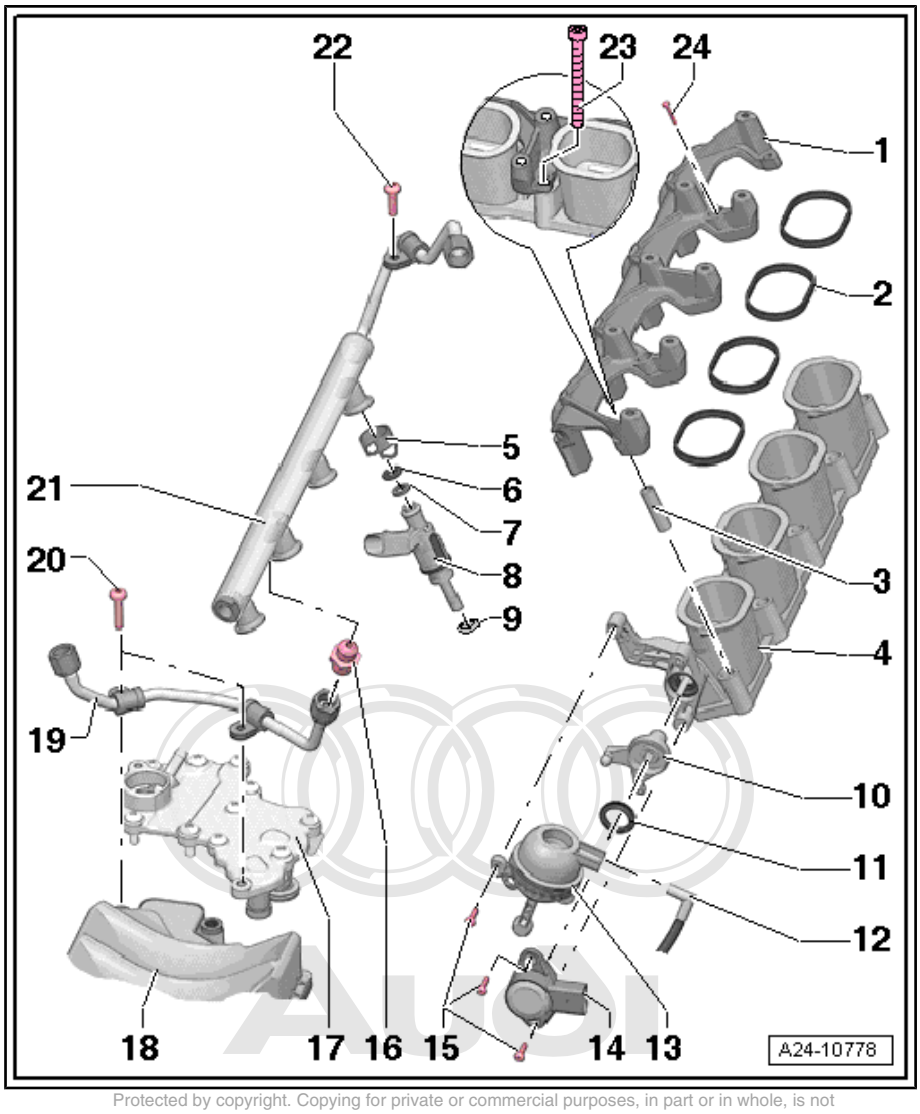

Protected by copyright. Copying for private or commercial purposes, in part or in whole, is not permitted unless authorised by AUDI AG. AUDI AG does not guarantee or accept any liability with respect to the correctness of information in this document. Copyright by AUDI AG.

1 - Bracket

2 - Seal

- ❑ Renew

3 - Sleeve

4 - Intake manifold (bottom section)

- ❑ When installing intake manifold (bottom section), intake manifold flaps must be in output position (intake channel fully open)
- ❑ Removing and installing ⇒ page 32
- ❑ 9 Nm

5 - Support ring

- ❑ Renew if damaged
- ❑ When installing, make sure it is seated correctly

6 - O-ring

- ❑ Renew
- ❑ Lubricate lightly with clean engine oil

7 - Spacer ring

- ❑ Renew if damaged

8 - Injector

- ❑ With support ring
- ❑ Removing and installing ⇒ page 35

9 - Combustion chamber ring seal

- ❑ Do not apply grease to ring seal or use any other lubricants
- ❑ Renew

10 - Operating lever

- ❑ For vacuum unit

11 - Seal

- ❑ Renew if damaged
- ❑ When renewing lever out with screwdriver
- ❑ Press in by hand

12 - Vacuum hose

- ❑ From intake manifold flap valve -N316-

13 - Vacuum unit for actuating intake manifold flaps

14 - Intake manifold flap potentiometer 2 -G512-

15 - Bolts

- ❑ 2.5 Nm

16 - Threaded connection

- ❑ 40 Nm

17 - Cover

- ❑ For spray nozzle valve and oil retention valve
- ❑ For removing and installing refer to Engine, mechanics⇒ Rep. Gr. 17

18 - Vacuum reservoir

19 - High-pressure fuel pipe

20 - Bolts

- ❑ 9 Nm

21 - Fuel rail

22 - Bolts

- ❑ 9 Nm

23 - Bolts

- ❑ 9 Nm

24 - Bolts

- ❑ 0.3 Nm

5.5 Injectors and fuel rail - exploded view

Note

The illustration shows the fuel rail (right-side) for cylinder bank 1.

Protected by copyright. Copying for private or commercial purposes, in part or in whole, is not permitted unless authorised by AUDI AG. AUDI AG does not guarantee or accept any liability with respect to the correctness of information in this document. Copyright by AUDI AG.

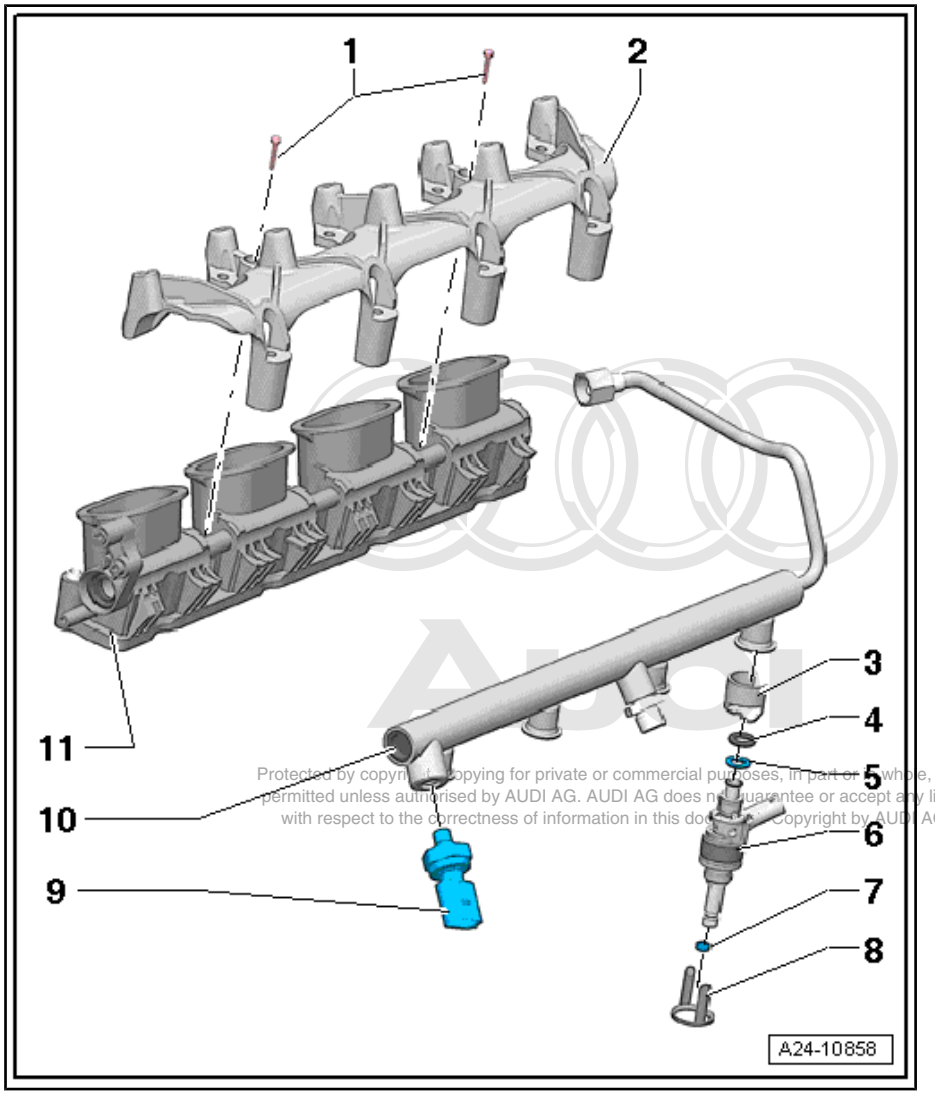

Protected by copyright. Copying for private or commercial purposes, in part or in whole, is not permitted unless authorised by AUDI AG. AUDI AG does not guarantee or accept any liability with respect to the correctness of information in this document. Copyright by AUDI AG.

1 - Bolts

- ❑ 0.3 Nm

2 - Bracket

3 - Radial compensation element

- ❑ Renew if damaged
- ❑ Clip onto support ring ⇒ Item 8 (page 32)

4 - O-ring

- ❑ Renew
- ❑ Lubricate lightly with clean engine oil

5 - Spacer ring

- ❑ Renew if damaged

6 - Injector

- ❑ Renewing ⇒ page 35

7 - Combustion chamber ring seal

- ❑ Do not apply grease to ring seal or use any other lubricants

8 - Support ring

- ❑ Renew
- ❑ Via this support ring, the fuel rail exerts the clamping force that holds the injector in the cylinder head

9 - Fuel pressure sender - G247-

- ❑ 25 Nm
- ❑ Lubricate threads lightly with clean oil
- ❑ Removing and installing ⇒ page 46

10 - Fuel rail

- ❑ Removing and installing ⇒ page 32

11 - Intake manifold (bottom section)

- ❑ Removing and installing ⇒ page 32
- ❑ 9 Nm

5.6 Removing and installing intake manifold (bottom section) with fuel rail

Special tools and workshop equipment required

- Torque wrench -V.A.G 1331-

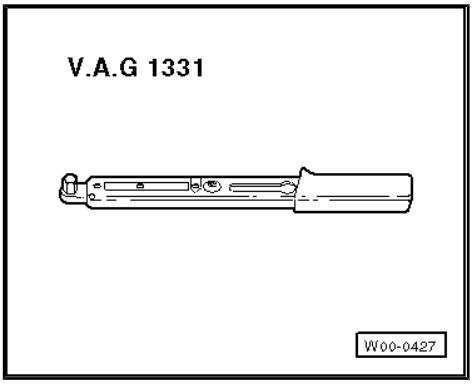

Protected by copyright. Copying for private or commercial purposes, in part or in whole, is not permitted unless authorised by AUDI AG. AUDI AG does not guarantee or accept any liability with respect to the correctness of information in this document. Copyright by AUDI AG.

- Tool insert (open-end ring spanner, 17 mm) -V.A.G 1331/2-
- Hand vacuum pump -VAS 6213-

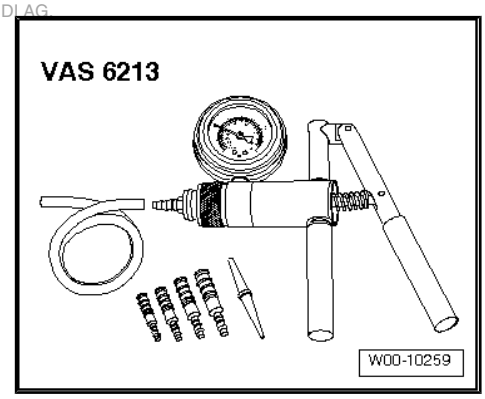

Removing

Note

The following description shows the removal and installation of the bottom section of the intake manifold (left-side). The procedure for the other side is more or less identical.

WARNING

- *The fuel system operates under high pressure. The pressure in the high-pressure part of the injection system must be reduced to a residual pressure prior to opening the system* ⇒ page 3 *.*
- *A clean cloth must then be wrapped around the connection and the residual pressure dissipated by carefully loosening the connection.*

– Remove intake manifold ⇒ page 23 .

– Detach vacuum hose from vacuum unit for intake manifold flaps.

– Unscrew union nut for high-pressure fuel pipe at high-pressure pump (counterhold threaded connection).

– Unplug electrical connector -1- at intake manifold flap potentiometer and pull off vacuum hose -2-.

– Unscrew union nut -3- (counterhold threaded connection).

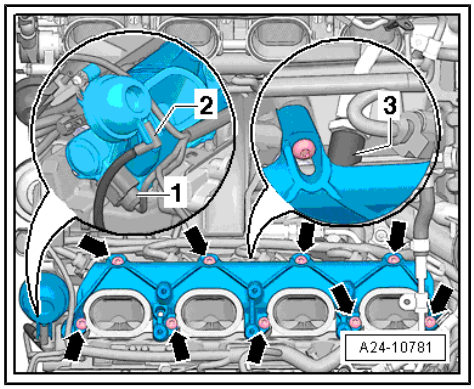

Note

To remove bottom section of intake manifold (right-side), unplug electrical connector for fuel pressure sender -G247- .

– Remove bolts -arrows- and detach intake manifold (bottom section) with fuel rail.

Caution

Risk of damage to engine.

- ***Block off the intake ports with clean cloths to prevent small objects from dropping into the engine through the intake ports in the cylinder heads.***

Installing

Installation is carried out in the reverse order; note the following:

Note

- *Renew gaskets and O-rings.*
- *Lubricate O-rings of injectors lightly with clean engine oil.*

When installing intake manifold (bottom section) move intake manifold flaps in direction of -arrow-.

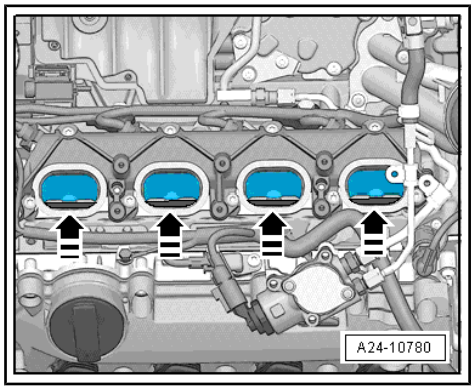

Protected by copyright. Copying for private or commercial purposes, in part or in whole, is not permitted unless authorised by AUDI AG. AUDI AG does not guarantee or accept any liability with respect to the correctness of information in this document. Copyright by AUDI AG.

– Connect hand vacuum pump -VAS 6213- to connection for vacuum unit for intake manifold flaps, as shown in illustration.

– Use hand vacuum pump to generate vacuum.

• This will cause the intake manifold flaps to open.

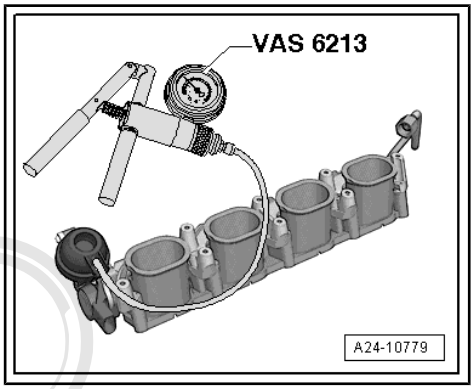

Note

If the intake manifold flaps are not opened, they can catch on the guide plates in the cylinder head when the intake manifold (bottom section) is installed.

– Then press intake manifold (bottom section) evenly onto injectors.

– Tighten bolts for intake manifold (bottom section) in diagonal sequence to specified torque.

• Tightening torque: intake manifold - exploded view ⇒ page 22

– Detach hand vacuum pump from connection for vacuum unit for intake manifold flaps.

Protected by copyright. Copying for private or commercial purposes, in part or in whole, is not permitted unless authorized by AUDI AG. AUDI AG does not guarantee or accept any liability with respect to the correctness of information in this document. Copyright by AUDI AG.

– Tighten union nut for high-pressure fuel pipe at high-pressure pump (counterhold threaded connection).

– Tighten union nut -3- (counterhold threaded connection).

• Tightening torque for high-pressure pump - refer to exploded view ⇒ page 41 .

– Ensure that high-pressure pipe is not under tension.

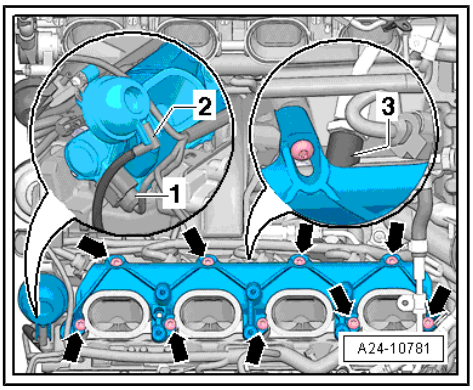

5.7 Removing and installing injectors

Special tools and workshop equipment required

♦ Tool set for FSI engines -T10133-

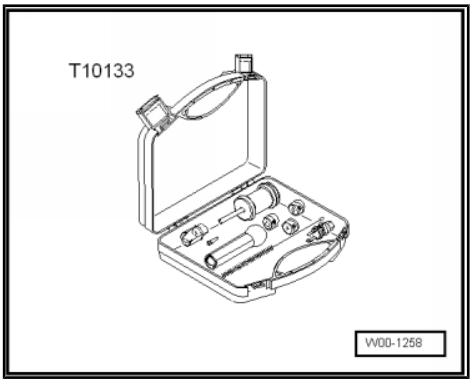

Removing

Note

The following description is for removing and installing the injectors on the left side (cylinder bank 2).

WARNING

- ***The fuel system operates under high pressure. The pressure in the high-pressure part of the injection system must be reduced to a residual pressure prior to opening the system ⇒ page 3 .***
- ***A clean cloth must then be wrapped around the connection and the residual pressure dissipated by carefully loosening the connection.***

– Remove intake manifold ⇒ page 23 .

– Remove intake manifold (bottom section) on relevant side ⇒ page 32 .

– Guide puller -T10133/2A- into groove on injector.

– Then attach removal tool -T10133/16- and pull out injector by turning bolt -1-.

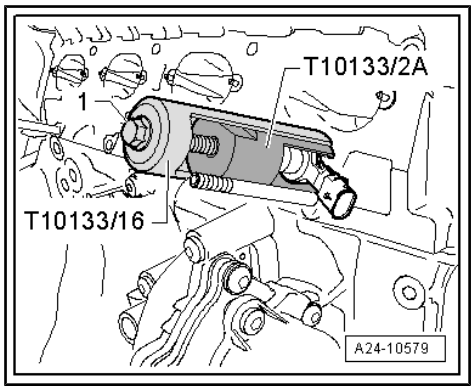

Note

When inserting the puller, there is a risk of destroying the radial compensation element due to the retainer tabs breaking.

– Carefully remove old combustion chamber ring seal -arrow-. To do so, cut open ring using knife or prise open ring with small screwdriver and then pull off forwards.

– Take care not to damage groove on injector. The injector must be renewed if the groove is damaged.

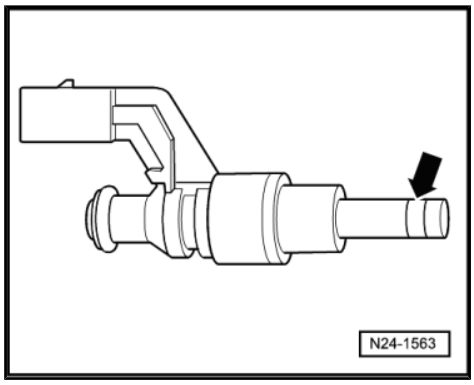

Installing

Note

- *Renew combustion chamber ring seal and O-ring.*
- *Renew spacer ring if damaged.*
- *Lightly lubricate O-rings for injectors with clean engine oil.*
- *The injectors must be re-installed on the same cylinders.*

Protected by copyright. Copying for private or commercial purposes, in part or in whole, is not permitted unless authorised by AUDI AG. AUDI AG does not guarantee or accept any liability with respect to the correctness of information in this document. Copyright by AUDI AG.

– Clean bore in cylinder head with nylon cylinder brush - T10133/4- .

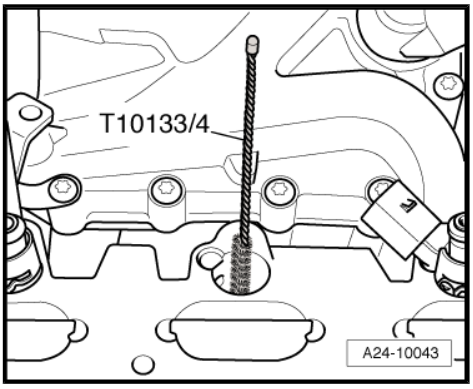

– Clip radial compensation element -1- into support ring -2-.
– When re-installing an injector, clean any combustion residue off groove for combustion chamber ring seal and injector stem with a clean cloth.

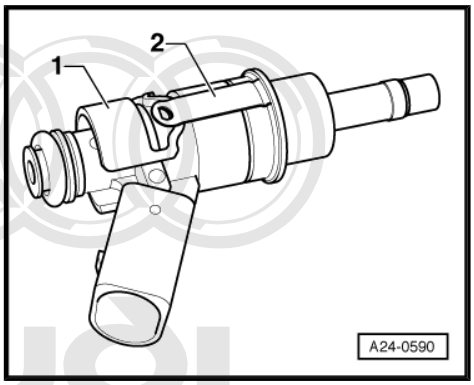

– Fit assembly cone -T10133/5- with new combustion chamber ring seal -1- onto injector -2-.

Protected by copyright. Copying for private or commercial purposes, in part or in whole, is not permitted unless authorised by AUDI AG. AUDI AG does not guarantee or accept any liability with respect to the correctness of information in this document. Copyright by AUDI AG.

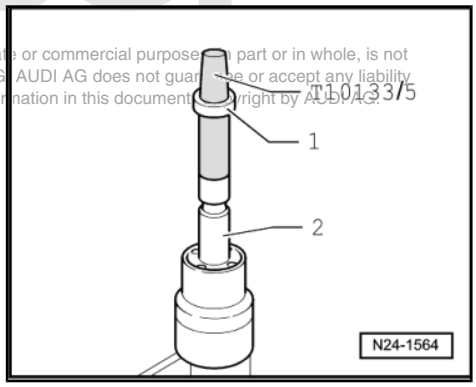

– Push combustion chamber ring seal onto assembly cone - T10133/5- as far as it will go using assembly sleeve - T10133/6- .
– Turn assembly sleeve -T10133/6- upside down and push combustion chamber ring seal into sealing ring groove.

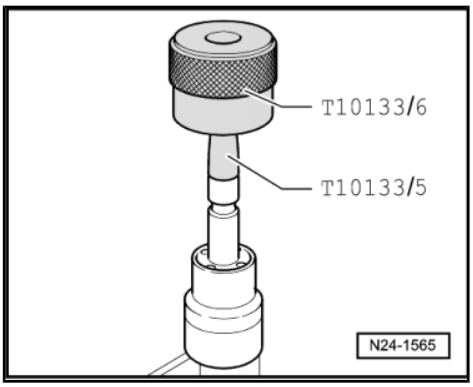

Note

The combustion chamber ring seal is widened when it is pushed onto the injector. After pushing it on, it therefore has to be compressed again. This is done in two stages, as described below.

– Push calibration sleeve -T10133/7- onto injector as far as it will go and simultaneously turn it slightly (approx. 180°).
– Pull calibration sleeve -T10133/7- off again by turning it in the opposite direction.

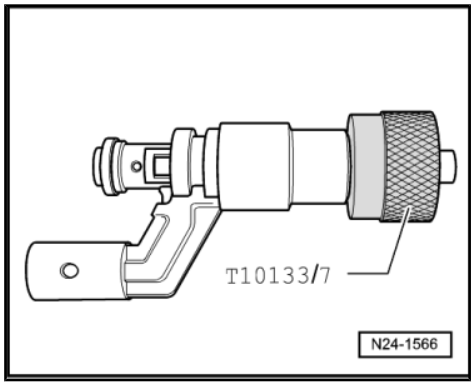

– Push calibration sleeve -T10133/8- onto injector as far as it will go and simultaneously turn it slightly (approx. 180°).
– Pull calibration sleeve -T10133/8- off again by turning it in the opposite direction.

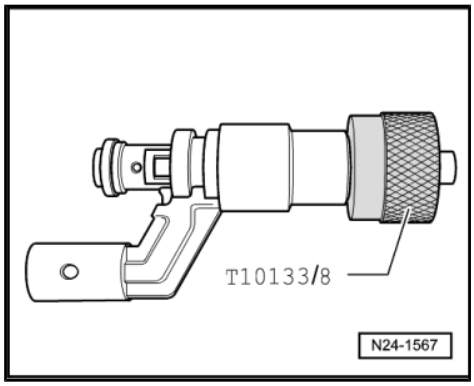

Note

The combustion chamber ring seal must not be lubricated.

– Push injector by hand as far as it will go into aperture in cylinder head (do not use oil or grease). Ensure that the injector is properly seated in the cylinder head.

Protected by copyright. Copying for private or commercial purposes, in part or in whole, is not permitted unless authorised by AUDI AG. AUDI AG does not guarantee or accept any liability with respect to the correctness of information in this document. Copyright by AUDI AG.

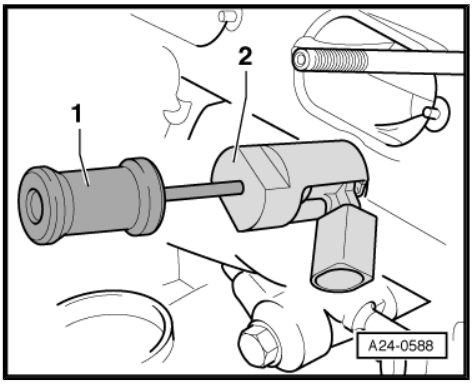

Note

- *It should be possible to insert injector easily. If necessary wait until the combustion chamber ring seal has contracted sufficiently.*
- *Note correct installation position and ensure that injectors are properly seated in cylinder head.*
- *If the injector cannot be pushed in by hand, use puller -T10133/2A- -2- with striker -T10133/3- to insert injector.*

- Electrical connector of injector must engage in recess in cylinder head.
- Coat O-rings of injectors with clean engine oil to facilitate insertion into fuel rail.
- Renew all seals.

Perform further installation in reverse order, paying attention to the following:

- Tightening torque: intake manifold - exploded view ⇒ page 22

Note

- *The connections of the high-pressure pipes must not be damaged.*
- *Do not attempt to bend high-pressure pipes to a different shape.*

Protected by copyright. Copying for private or commercial purposes, in part or in whole, is not permitted unless authorised by AUDI AG. AUDI AG does not guarantee or accept any liability with respect to the correctness of information in this document. Copyright by AUDI AG.

– Do not install mounting brackets until high-pressure pipes have been finally secured.
– Install relevant bottom section of intake manifold ⇒ page 32 .
– Install intake manifold ⇒ page 23 .

5.8 Diagram of vacuum hose connections at intake manifold

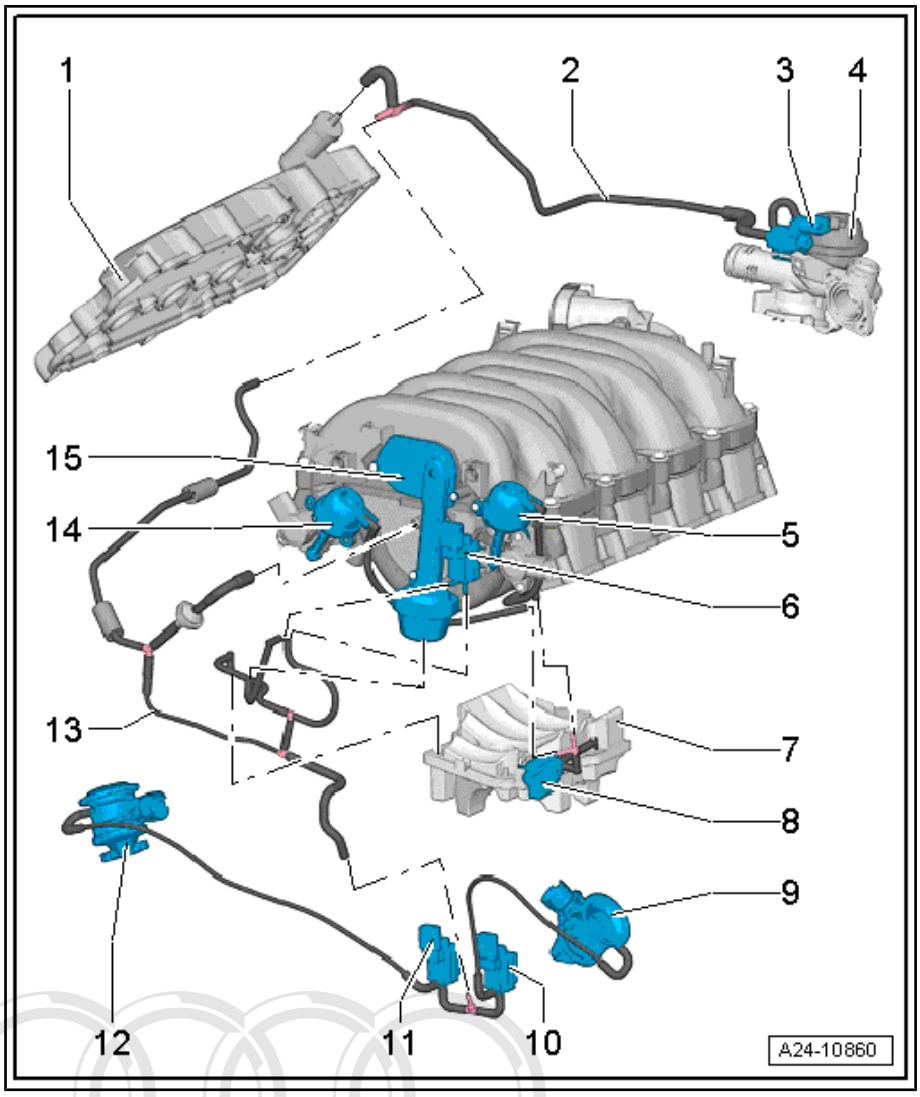

1 - Cylinder head cover, cylinder bank 1

2 - Vacuum hose

3 - Coolant valve for cylinder head -N489-

4 - Vacuum unit for coolant valve for cylinder head -N489-

5 - Vacuum unit for intake manifold flap, cylinder bank 2

- ❑ For cylinder bank 2
- ❑ Check with hand vacuum pump -VAS 6213-

6 - Variable intake manifold change-over valve -N156-

7 - Vacuum reservoir

- ❑ Fitting location: beneath intake manifold

8 - Intake manifold flap valve -N316-

- ❑ Take out intake manifold for removal and installation

9 - Combination valve for secondary air system (left-side)

- ❑ For removing and installing refer to Engine, mechanics⇒ Rep. Gr. 26
- ❑ Checking combination valves for secondary air system for correct operation and leakage, refer to Engine, mechanics ⇒ Rep. Gr. 26

10 - Secondary air inlet valve 2 -N320-

11 - Secondary air inlet valve -N112-

12 - Combination valve for secondary air system (right-side)

- ❑ For removing and installing refer to Engine, mechanics⇒ Rep. Gr. 26
- ❑ Checking combination valves for secondary air system for correct operation and leakage, refer to Engine, mechanics ⇒ Rep. Gr. 26

13 - Vacuum hose

14 - Vacuum unit for intake manifold flap, cylinder bank 1

- ❑ For cylinder bank 1
- ❑ Check with hand vacuum pump -VAS 6213-

15 - Vacuum unit for intake manifold change-over

- ❑ Check with hand vacuum pump -VAS 6213-

16 - Vacuum reservoir

Protected by copyright. Copying for private or commercial purposes, in part or in whole, is not permitted unless authorised by AUDI AG. AUDI AG does not guarantee or accept any liability with respect to the correctness of information in this document. Copyright by AUDI AG.

6 High-pressure pump

6.1 High-pressure pump - exploded view

1 - High-pressure pump

- ❑ Fuel metering valve - N290- is installed in high-pressure pump on right-side (cylinder bank 1).
- ❑ Fuel metering valve 2 - N402- is installed in high-pressure pump on left-side (cylinder bank 2).
- ❑ Removing and installing ⇒ page 43

2 - Bolt

- ❑ 9 Nm

3 - High-pressure pipe

> ⚠ **WARNING**
>
> *The pressure in the high-pressure part of the injection system must be reduced to a residual pressure prior to opening the system ⇒ page 3 .*
>
> *A clean cloth must then be wrapped around the connection and the residual pressure dissipated by carefully loosening the connection.*
>
> *Observe notes on procedure for disconnecting the battery ⇒ Rep. Gr. 27 .*

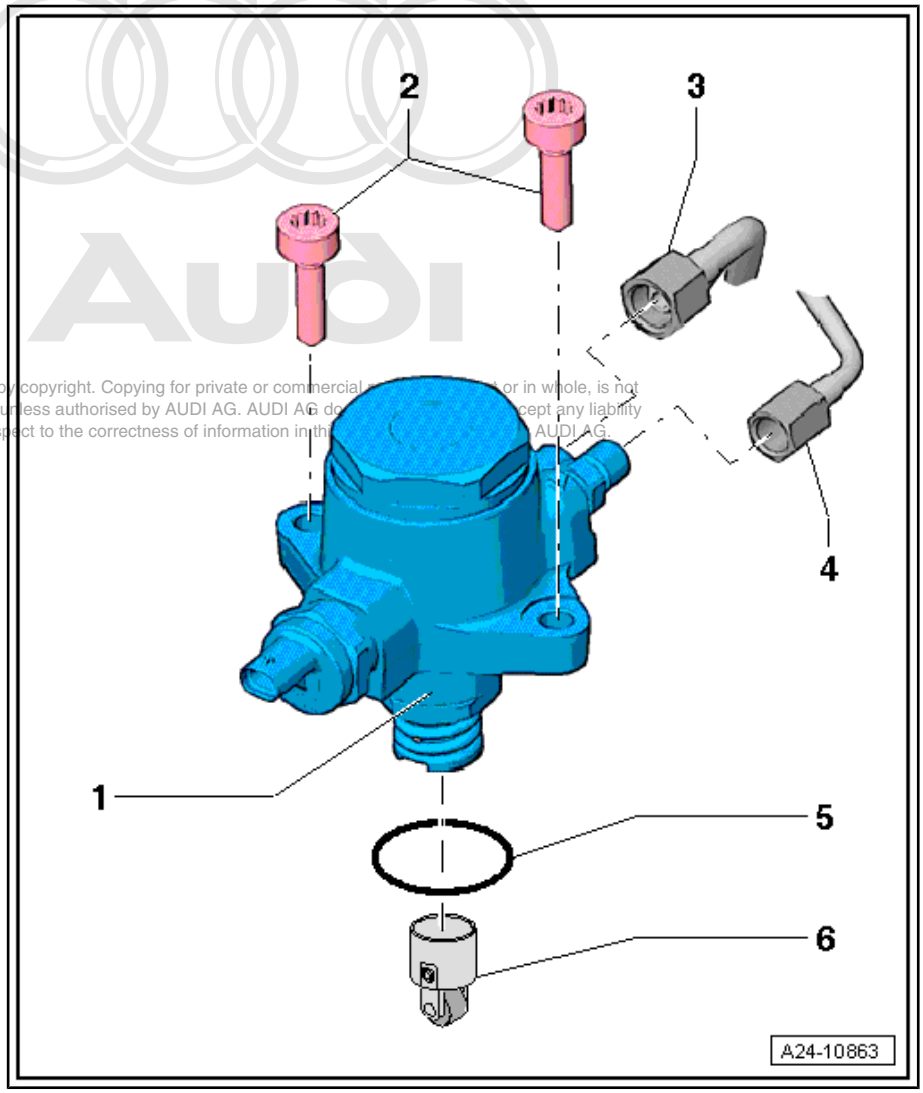

Protected by copyright. Copying for private or commercial purposes, in part or in whole, is not permitted unless authorised by AUDI AG. AUDI AG does not accept any liability with respect to the correctness of information in this document. © AUDI AG.

- ❑ Before loosening, first disconnect earth wire at battery with ignition switched off
- ❑ Connections must not be damaged
- ❑ Do not alter shape
- ❑ 25 Nm

4 - Fuel supply pipe

> ⚠ WARNING
>
> *The pressure in the high-pressure part of the injection system must be reduced to a residual pressure prior to opening the system ⇒ page 3 .*
>
> *A clean cloth must then be wrapped around the connection and the residual pressure dissipated by carefully loosening the connection.*
>
> *Observe notes on procedure for disconnecting the battery ⇒ Rep. Gr. 27 .*

- ❑ Before loosening, first disconnect earth wire at battery with ignition switched off
- ❑ Connections must not be damaged
- ❑ Do not alter shape
- ❑ 25 Nm

5 - O-ring

- ❑ Renew

6 - Roller tappet

Protected by copyright. Copying for private or commercial purposes, in part or in whole, is not permitted unless authorised by AUDI AG. AUDI AG does not guarantee or accept any liability with respect to the correctness of information in this document. Copyright by AUDI AG.

6.2 Removing and installing high-pressure pump

Special tools and workshop equipment required

- Torque wrench -V.A.G 1331-
- Tool insert, AF 17 -V.A.G 1331/6-
- Socket insert AF 14, flared ring spanner -V.A.G 1331/8-

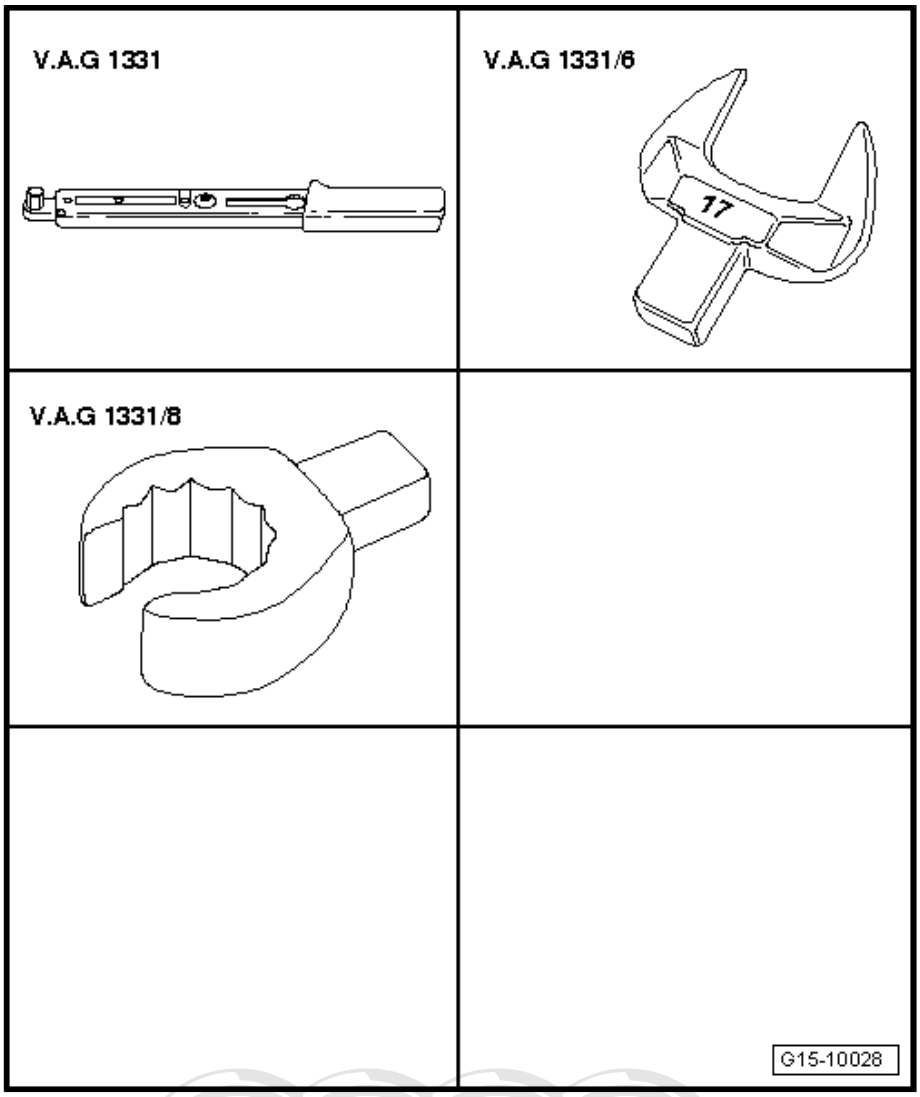

Removing

Note

The following description is for removing and installing the high-pressure pump on the left side.

Protected by copyright. Copying for private or commercial purposes, in part or in whole, is not permitted unless authorised by AUDI AG. AUDI AG does not guarantee or accept any liability with respect to the correctness of information in this document. Copyright by AUDI AG.

WARNING

- *The fuel system operates under high pressure. The pressure in the high-pressure part of the injection system must be reduced to a residual pressure prior to opening the system* *⇒ page 3* *.*
- *A clean cloth must then be wrapped around the connection and the residual pressure dissipated by carefully loosening the connection.*
- *Observe notes on procedure for disconnecting the battery ⇒ Rep. Gr. 27 .*

– Disconnect earth wire at battery with ignition switched off.
– Pull off engine cover panel.
– Unplug electrical connectors for fuel pressure sender for low pressure -G410- and for fuel metering valve 2 -N402- .
– Detach both union nuts for fuel lines.
– Remove bolts -3-.

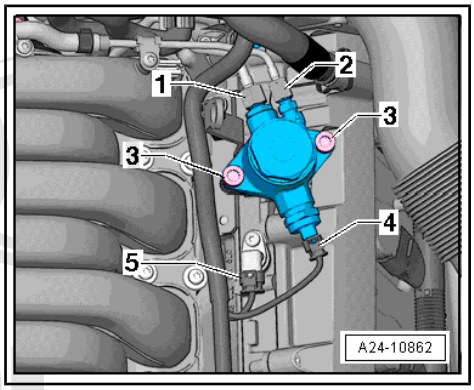

Note

Do not attempt to bend high-pressure pipes to a different shape.

– Carefully pull out high-pressure pump.
– Pull roller tappet out of cylinder head.

Installing

Installation is carried out in the reverse order; note the following:

Protected by copyright. Copying for private or commercial purposes, in part or in whole, is not permitted unless authorised by AUDI AG. AUDI AG does not guarantee or accept any liability with respect to the correctness of information in this document. Copyright by AUDI AG.

Note

Renew O-ring.

– Fit roller tappet in cylinder head.
– Only lift high-pressure pipes slightly to fit the high-pressure pump.
– Fit high-pressure pump in cylinder head and secure in position.

Note

- *The connections of the high-pressure pipes must not be damaged.*
- *Do not attempt to bend high-pressure pipes to a different shape.*

– Tighten union nuts on high-pressure pipes hand-tight initially.
– Ensure that high-pressure pipes are not under tension.
– To tighten union nut (14 mm) for high-pressure pipe, use torque wrench -V.A.G 1331- with socket insert AF 14, flared ring spanner -V.A.G 1331/8- .

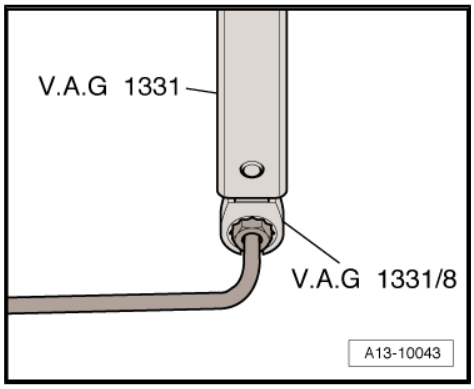

– To tighten union nut (17 mm) for high-pressure pipe, use torque wrench -V.A.G 1331- with tool insert (17 mm) -V.A.G 1331/6- .

• For tightening torques refer to exploded view of high-pressure pump ⇒ page 41 .

– Observe notes on procedures required after connecting battery ⇒ Rep. Gr. 27 .

– Reattach electrical connectors for fuel pressure sender (low pressure) -G410- and fuel metering valve 2 -N402- .

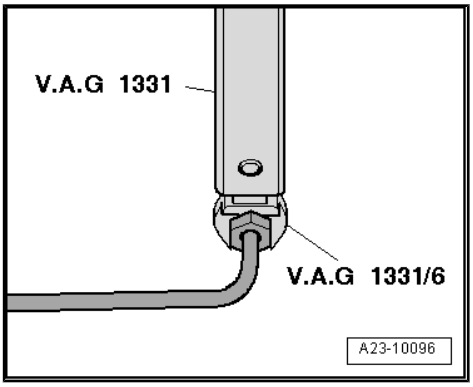

Note

Check fuel system for leaks.

Protected by copyright. Copying for private or commercial purposes, in part or in whole, is not permitted unless authorised by AUDI AG. AUDI AG does not guarantee or accept any liability with respect to the correctness of information in this document. Copyright by AUDI AG.

7 Components of injection system

7.1 Removing and installing fuel pressure sender -G247-

Removing

– Pull off engine cover panel.

– Pull cover -1- towards front and lift off.

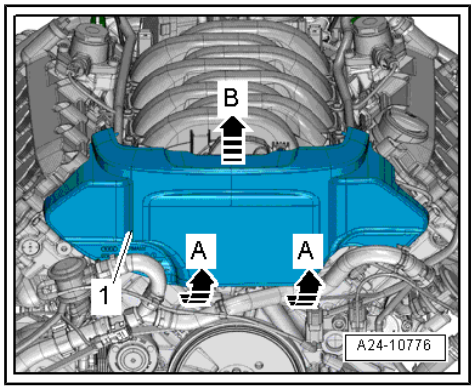

– Unscrew fuel pressure sender -G247- -2-.

Installing

– Tighten fuel pressure sender -G247- .

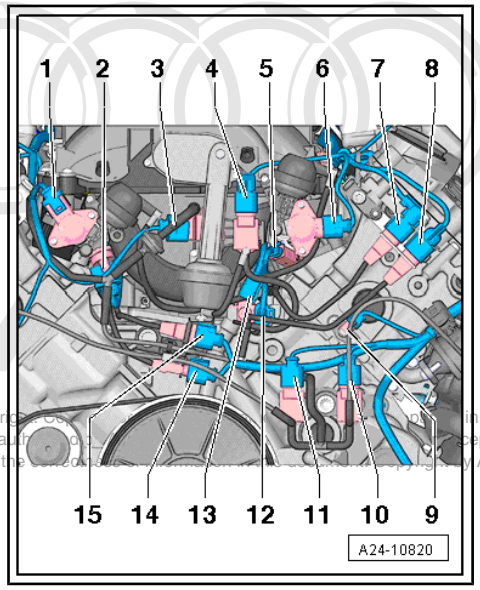

Note

♦ *The connections -arrows- of the high-pressure pipe must not be damaged.*

♦ *Do not attempt to bend high-pressure pipe to a different shape.*

– Tighten union nut on high-pressure pipe hand-tight initially.

– Ensure that high-pressure pipe is not under tension.

• Tightening torque: refer to exploded view of injectors and fuel rail ⇒ page 31

Protected by copyright. Copying for private or commercial purposes, in whole or in part, is not permitted unless authorised by AUDI AG. AUDI AG does not guarantee or accept any liability with respect to the correctness of information in this document. Copyright by AUDI AG.

– To tighten union nut (17 mm) for high-pressure pipe, use torque wrench -V.A.G 1331- with tool insert (17 mm) -V.A.G 1331/6- .

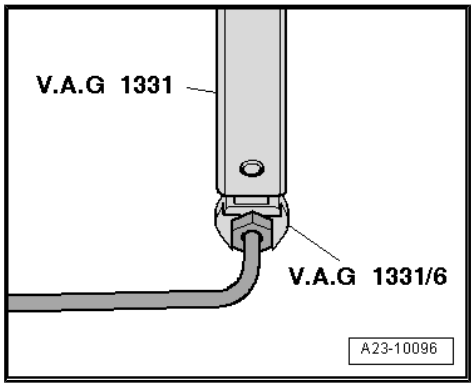

The remaining installation steps are carried out in the reverse sequence.

7.2 Checking fuel pressure and residual pressure (up to high-pressure pump)

Special tools and workshop equipment required

- K-Jetronic pressure tester -V.A.G 1318-

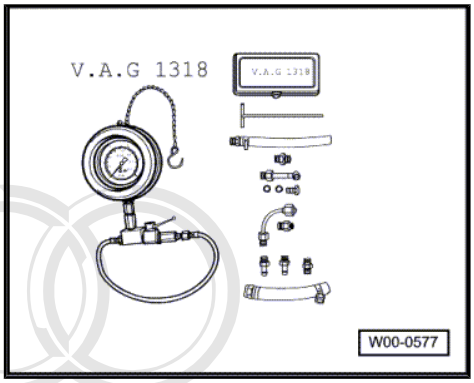

- Fuel-resistant measuring container
- Protective gloves

Checking fuel pressure

- Battery voltage at least 12.5 V.
- Fuel filter OK.
- Fuel tank at least $^1/_4$ full.
- Fuel pump control unit -J538- OK.
- Ignition off.

Protected by copyright. Copying for private or commercial purposes, in part or in whole, is not permitted unless authorised by AUDI AG. AUDI AG does not guarantee or accept any liability with respect to the correctness of information in this document. Copyright by AUDI AG.

> ⚠ **WARNING**
>
> *The fuel system is pressurised. Before opening the system place a clean cloth around the connection. Then release pressure by carefully loosening the connection.*

– Push back protective sleeve -1- and disconnect fuel line.
– First press hose connector -2- downwards -arrow A-, then press release tabs -arrow B-.
– Pull off hose connector, keeping release tabs depressed.

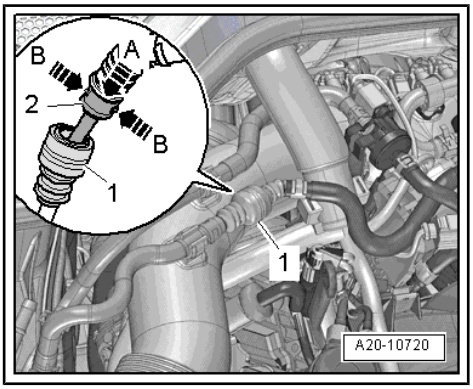

– Connect K-Jetronic pressure tester -V.A.G 1318- with suitable adapter to fuel line.
– Fit auxiliary hose to K-Jetronic pressure tester -V.A.G 1318- and hold it in a container.

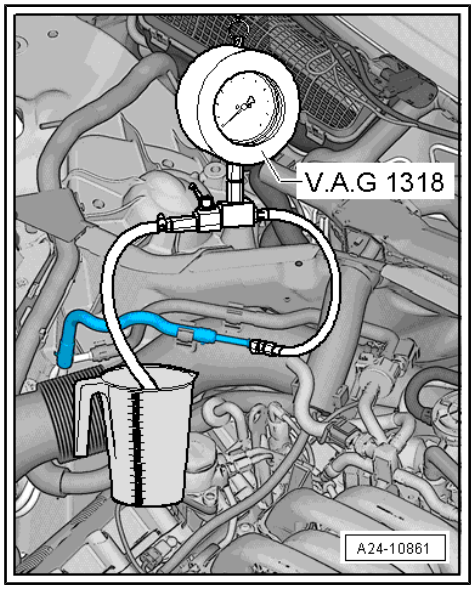

Protected by copyright. Copying for private or commercial purposes, in part or in whole, is not permitted unless authorised by AUDI AG. AUDI AG does not guarantee or accept any liability with respect to the correctness of information in this document. Copyright by AUDI AG.

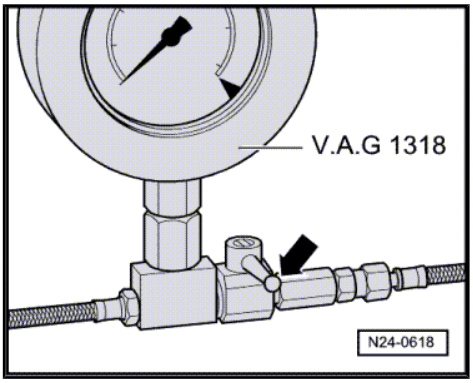

– Close cut-off valve on K-Jetronic pressure tester -V.A.G 1318- .
• Lever is at right angle to direction of flow -arrow-.
– Connect a vehicle diagnostic tester.
– Select “Engine electronics” in vehicle self-diagnosis.
– Then select “Final control diagnosis”.
– Select “Fuel pump electronics” from list and press “start”.

Note

This function actuates the fuel pump.

– Read off fuel pressure on K-Jetronic pressure tester -V.A.G 1318- .
• Specification: 5 to 8 bar
– End this function when fuel pressure stops rising on K-Jetronic pressure tester -V.A.G 1318- .

If specification is not obtained:

– Check fuel delivery rate of individual fuel pumps ⇒ Rep. Gr. 20 .

Checking residual pressure

– Check system for leaks and check residual pressure by watching the drop in pressure on the K-Jetronic pressure tester -V.A.G 1318- .
• After 10 minutes pressure should still be at least 3 bar.

If the residual pressure drops below 3 bar:

♦ Check union between pressure gauge and fuel line for leaks.
♦ Test pressure gauge for leaks.
♦ Check fuel lines and their connections for leaks.
♦ Check fuel delivery rate of individual fuel pumps ⇒ Rep. Gr. 20 .
♦ Renew fuel filter with integrated fuel pressure regulator ⇒ Rep. Gr. 20 .
♦ Non-return valve in one of the two fuel pumps is defective ⇒ Rep. Gr. 20 .

Protected by copyright. Copying for private or commercial purposes, in part or in whole, is not permitted unless authorised by AUDI AG. AUDI AG does not guarantee or accept any liability with respect to the correctness of information in this document. Copyright by AUDI AG.

Assembly is carried out in the reverse order; note the following:

– Switch off ignition.

Note

Before removing the pressure tester, release the fuel pressure by opening the cut-off valve. To do so, hold end of test hose -arrow- into measuring container.

– Re-attach fuel supply pipe (make sure that all parts are clean and that there are no leaks).

Note

Check fuel system for leaks.

Protected by copyright. Copying for private or commercial purposes, in part or in whole, is not permitted unless authorised by AUDI AG. AUDI AG does not guarantee or accept any liability with respect to the correctness of information in this document. Copyright by AUDI AG.

8 Lambda probes

8.1 Lambda probes - overview

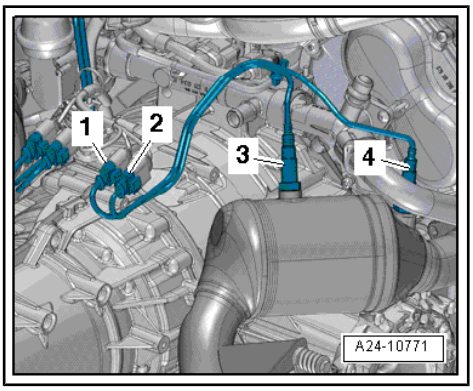

Fitting location of Lambda probes on cylinder bank 1 (right-side)

1 - Electrical connector for Lambda probe after catalytic converter -G130-

2 - Electrical connector for Lambda probe -G39-

3 - Lambda probe after catalytic converter -G130-

4 - Lambda probe -G39-

Removing and installing Lambda probe -G39- ⇒ page 51

Removing and installing Lambda probe after catalytic converter -G130- ⇒ page 54

- Tightening torque: 55 Nm

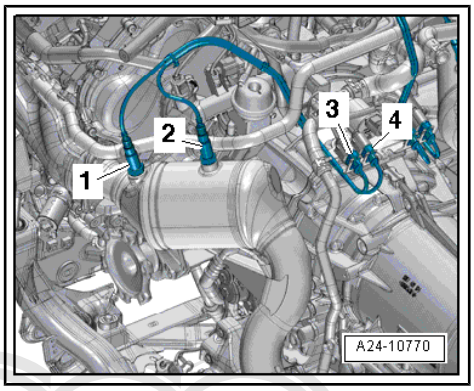

Fitting location of Lambda probes on cylinder bank 2 (left-side)

1 - Lambda probe 2 -G108-

2 - Lambda probe 2 after catalytic converter -G131-

3 - Electrical connector for Lambda probe 2 -G108-

4 - Electrical connector for Lambda probe 2 after catalytic converter -G131-

Removing and installing Lambda probe 2 -G108- ⇒ page 56

Removing and installing Lambda probe 2 after catalytic converter -G131- ⇒ page 58

- Tightening torque: 55 Nm

Note

- *Threads of new Lambda probes are already coated with assembly paste; the paste must not get into the slots on the probe body.*
- *In the case of a used Lambda probe grease only the thread with high-temperature paste. The paste must not get into the slots on the Lambda probe body. High-temperature paste ⇒ Parts catalogue*
- *When installing, it is important to re-attach the Lambda probe wiring at the same locations to prevent it from coming into contact with the exhaust pipe.*

Protected by copyright. Copying for private or commercial purposes, in part or in whole, is not permitted unless authorised by AUDI AG. AUDI AG does not guarantee or accept any liability with respect to the correctness of information in this document. Copyright by AUDI AG.

8.2 Removing and installing Lambda probe -G39- (before catalytic converter)

Special tools and workshop equipment required

♦ Lambda probe open ring spanner set -3337-

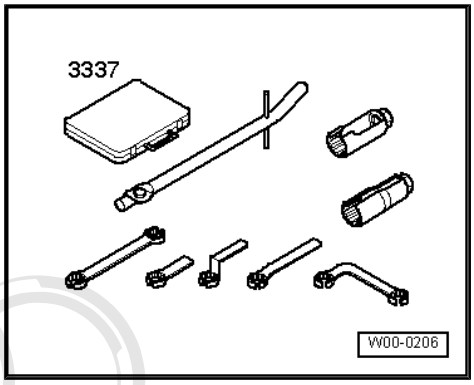

Removing

Note

All cable ties which are released or cut open when removing must be fitted in the same position when installing.

– Pull off engine cover panel.
– Unclip fuel supply pipe -2-.
– Loosen hose clips -1 and 3- and remove air pipe (right-side).

Protected by copyright. Copying for private or commercial purposes, in part or in whole, is not permitted unless authorised by AUDI AG. AUDI AG does not guarantee or accept any liability with respect to the correctness of information in this document. Copyright by AUDI AG.

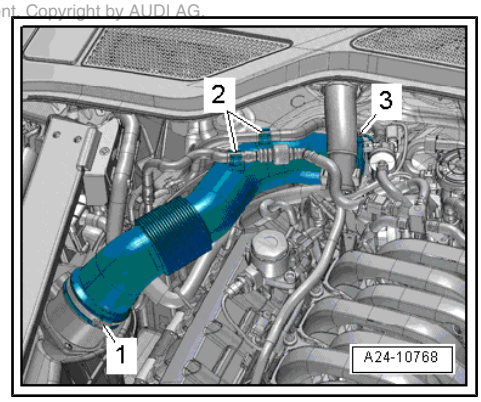

– Loosen hose clips -1 and 3- and remove air pipe (left-side).
– Disconnect vacuum lines -arrows- from intake connecting pipe.

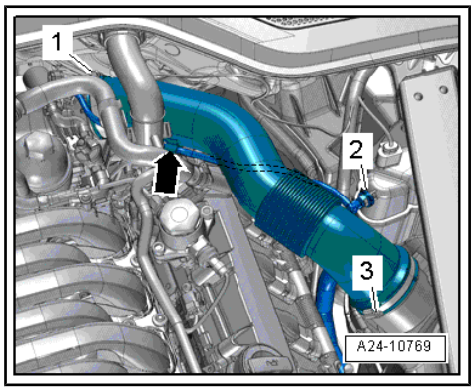

– Remove bolts -4- and detach crankcase breather.
– Detach hose -2- from activated charcoal filter solenoid valve 1 -N80- .
– Unplug electrical connectors -1 and 3-.

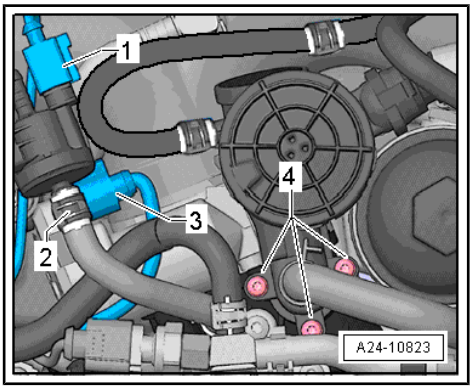

– Detach activated charcoal filter solenoid valve 1 -N80- from bracket and move it clear to the side.
– Release hose clip on intake connecting pipe.

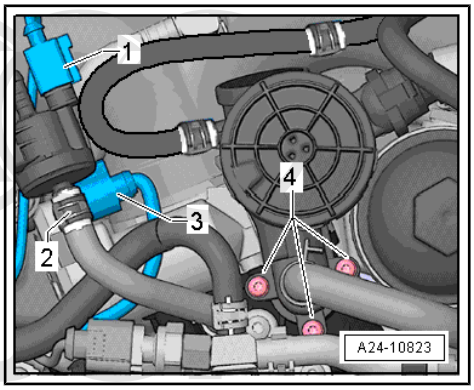

– Remove both bolts -arrows- from intake connecting pipe.
– Guide intake connecting pipe out from above.

Copyright by AUDI AG. Copying for private or commercial purposes is not permitted unless authorised by AUDI AG. AUDI AG does not guarantee or accept any liability with respect to the correctness of information.

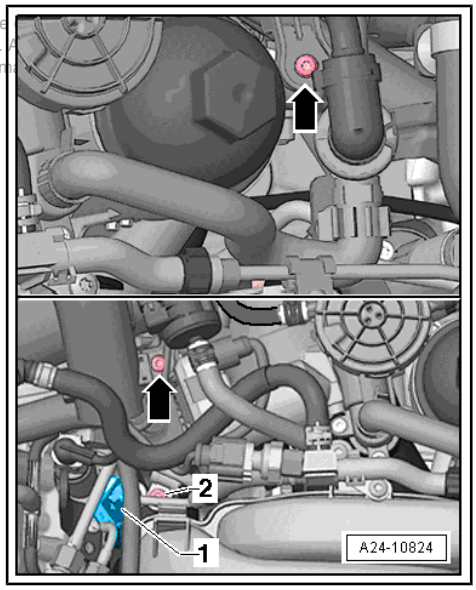

– Unplug electrical connector -2-.

– Unscrew Lambda probe -G39- -4- using tool from Lambda probe open ring spanner set -3337- .

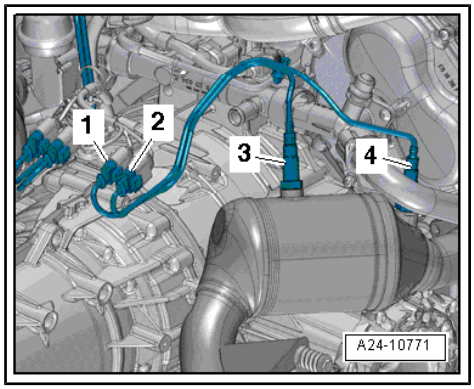

Installing

Installation is carried out in the reverse order; note the following:

Note

- *Threads of new Lambda probes are already coated with assembly paste; the paste must not get into the slots on the probe body.*
- *In the case of a used Lambda probe grease only the thread with high-temperature paste. The paste must not get into the slots on the Lambda probe body. High-temperature paste ⇒ Parts catalogue*
- *When installing, the Lambda probe wire must always be reattached at the same locations to prevent it from coming into contact with the exhaust pipe.*
- *Fit all cable ties in the original positions when installing.*

- Tightening torque: refer to exploded view of Lambda probes ⇒ page 51 .

8.3 Removing and installing Lambda probe after catalytic converter -G130-

Special tools and workshop equipment required

- Lambda probe open ring spanner set -3337-

Protected by copyright. Copying for private or commercial purposes, in part or in whole, is not permitted unless authorised by AUDI AG. AUDI AG does not guarantee or accept any liability with respect to the correctness of information in this document. Copyright by AUDI AG.

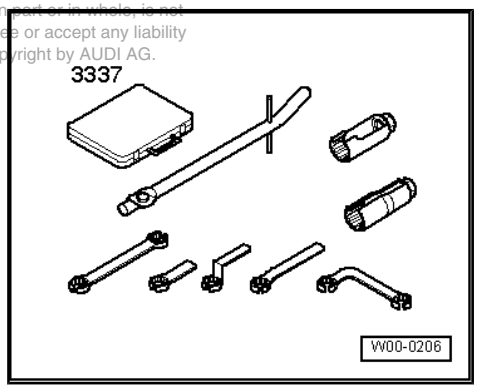

Removing

Note

All cable ties which are released or cut open when removing must be fitted in the same position when installing.

– Pull off engine cover panel.

– Unclip fuel supply pipe -2-.

– Loosen hose clips -1 and 3- and remove air pipe (right-side).

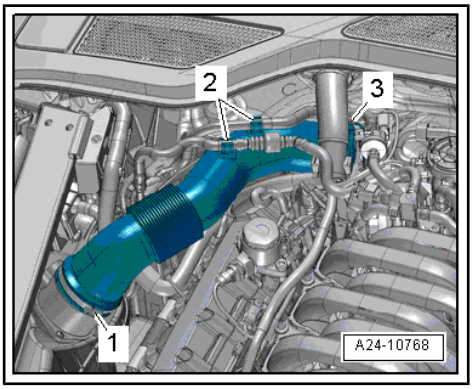

– Loosen hose clips -1 and 3- and remove air pipe (left-side).
– Disconnect vacuum lines -arrows- from intake connecting pipe.

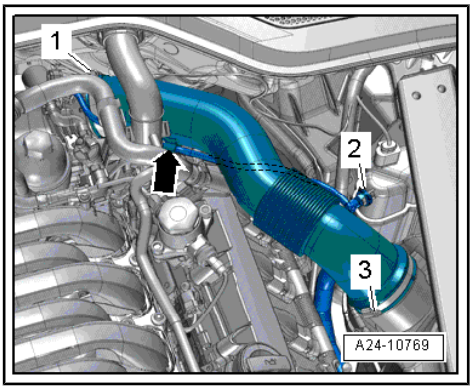

– Remove bolts -4- and detach crankcase breather.
– Detach hose -2- from activated charcoal filter solenoid valve 1 -N80- .
– Unplug electrical connectors -1 and 3-.

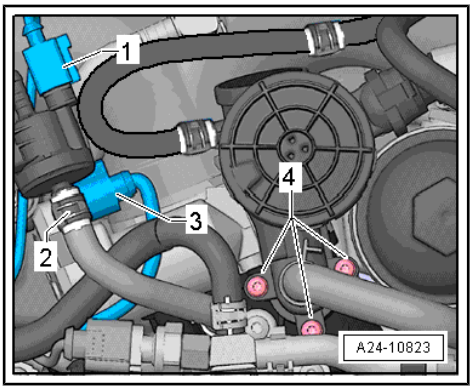

– Detach activated charcoal filter solenoid valve 1 -N80- from bracket and move it clear to the side.
– Release hose clip on intake connecting pipe.

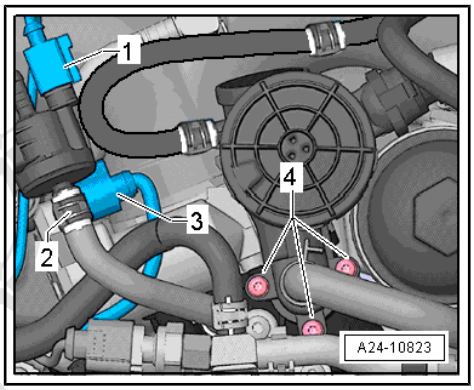

Protected by copyright. Copying for private or commercial purposes, in part or in whole, is not permitted unless authorised by AUDI AG. AUDI AG does not guarantee or accept any liability with respect to the correctness of information in this document. Copyright by AUDI AG.

– Remove both bolts -arrows- from intake connecting pipe.
– Guide intake connecting pipe out from above.

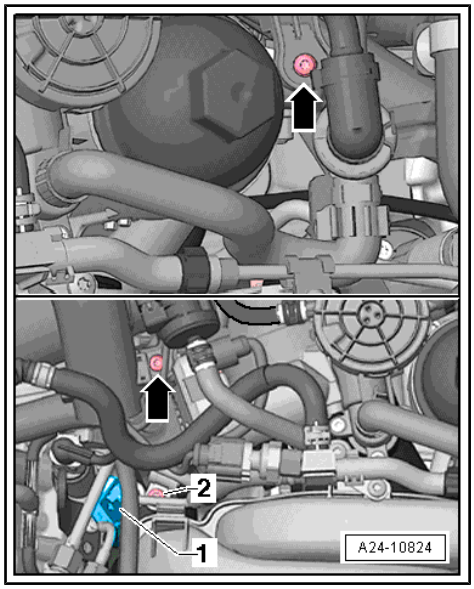

Protected by copyright. Copying for private or commercial purposes, in part or in whole, is not permitted unless authorised by AUDI AG. AUDI AG does not guarantee or accept any liability with respect to the correctness of information in this document. Copyright by AUDI AG.

– Unplug electrical connector -1-.
– Unscrew Lambda probe after catalytic converter -G130- -3- using tool from Lambda probe open ring spanner set -3337- .

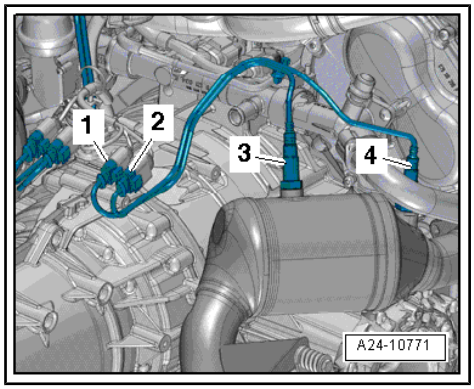

Installing

Installation is carried out in the reverse order; note the following:

Note

- *Threads of new Lambda probes are already coated with assembly paste; the paste must not get into the slots on the probe body.*
- *In the case of a used Lambda probe grease only the thread with high-temperature paste. The paste must not get into the slots on the Lambda probe body. High-temperature paste ⇒ Parts catalogue*
- *When installing, the Lambda probe wire must always be reattached at the same locations to prevent it from coming into contact with the exhaust pipe.*
- *Fit all cable ties in the original positions when installing.*

- Tightening torque: refer to exploded view of Lambda probes ⇒ page 51 .

8.4 Removing and installing Lambda probe 2 -G108- (before catalytic converter)

Special tools and workshop equipment required

- Lambda probe open ring spanner set -3337-

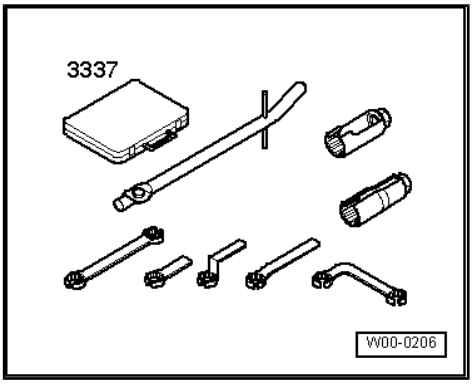

Removing

Note

All cable ties which are released or cut open when removing must be fitted in the same position when installing.

– Pull off engine cover panel.

– Loosen hose clips -1 and 2- and remove air pipe (left-side).

Protected by copyright. Copying for private or commercial purposes, in part or in whole, is not permitted unless authorised by AUDI AG. AUDI AG does not guarantee or accept any liability with respect to the correctness of information in this document. Copyright by AUDI AG.

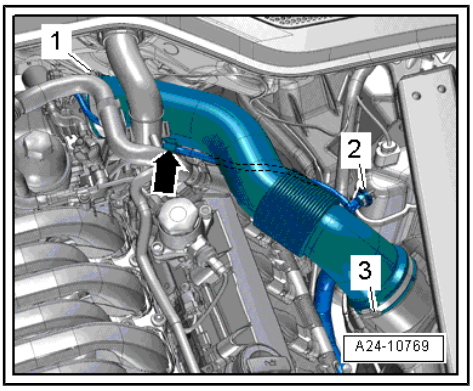

– Unplug electrical connector -3-.

– Unscrew Lambda probe 2 -G108- -1- using tool from Lambda probe open ring spanner set -3337- .

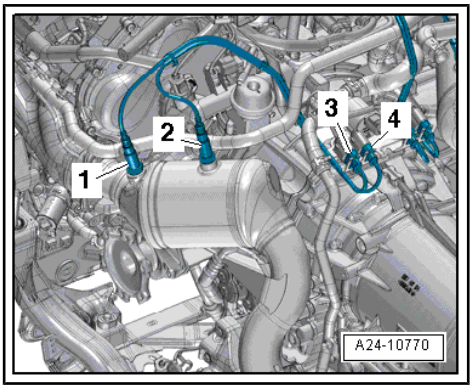

Installing

Installation is carried out in the reverse order; note the following:

Note

- *Threads of new Lambda probes are already coated with assembly paste; the paste must not get into the slots on the probe body.*
- *In the case of a used Lambda probe grease only the thread with high-temperature paste. The paste must not get into the slots on the Lambda probe body. High-temperature paste ⇒ Parts catalogue*
- *When installing, the Lambda probe wire must always be reattached at the same locations to prevent it from coming into contact with the exhaust pipe.*
- *Fit all cable ties in the original positions when installing.*

• Tightening torque: refer to exploded view of Lambda probes ⇒ page 51 .

8.5 Removing and installing Lambda probe after catalytic converter -G131-

Special tools and workshop equipment required

- Lambda probe open ring spanner set -3337-

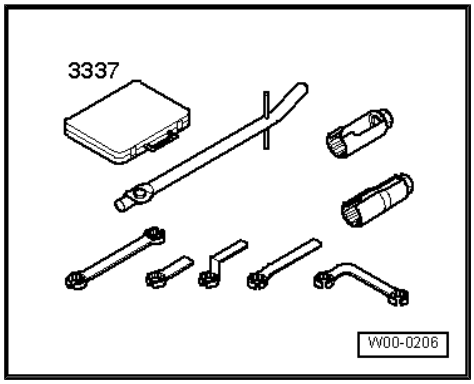

Removing

Note

All cable ties which are released or cut open when removing must be fitted in the same position when installing.

– Pull off engine cover panel.

– Loosen hose clips -1 and 2- and remove air pipe (left-side).

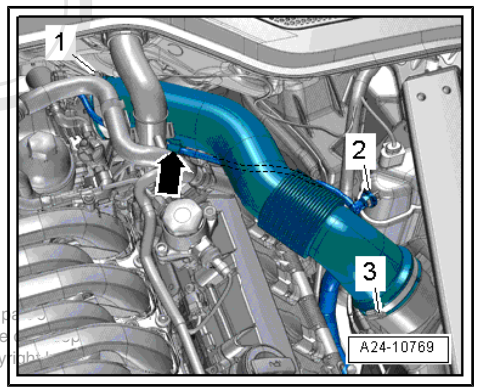

Protected by copyright. Copying for private or commercial purposes, in part or in whole, is not permitted unless authorised by AUDI AG. AUDI AG does not guarantee or assume liability with respect to the correctness of information in this document. Copyright by AUDI AG.

– Unplug electrical connector -4-.

– Unscrew Lambda probe after catalytic converter -G131- -2- using tool from Lambda probe open ring spanner set -3337- .

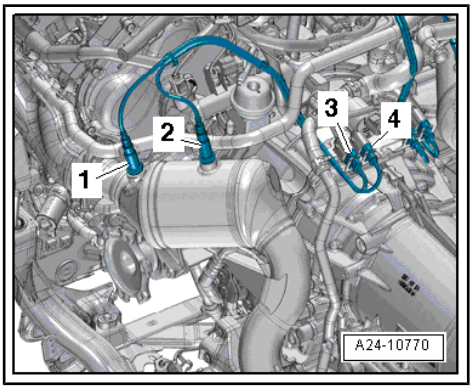

Installing

Installation is carried out in the reverse order; note the following:

Note

- *Threads of new Lambda probes are already coated with assembly paste; the paste must not get into the slots on the probe body.*
- *In the case of a used Lambda probe grease only the thread with high-temperature paste. The paste must not get into the slots on the Lambda probe body. High-temperature paste ⇒ Parts catalogue*
- *When installing, the Lambda probe wire must always be reattached at the same locations to prevent it from coming into contact with the exhaust pipe.*
- *Fit all cable ties in the original positions when installing.*

- Tightening torque: refer to exploded view of Lambda probes ⇒ page 51 .

Protected by copyright. Copying for private or commercial purposes, in part or in whole, is not permitted unless authorised by AUDI AG. AUDI AG does not guarantee or accept any liability with respect to the correctness of information in this document. Copyright by AUDI AG.

9 Engine control unit

9.1 Wiring and component check with break-out box -VAS 6606-

Special tools and workshop equipment required

- Break-out box VAS 6606/1
- Break-out box VAS 6606/2
- Break-out box VAS 6606/3
- Sheets for break-out box -VAS 6606/1-1-
- Sheets for break-out box -VAS 6606/2-1-
- Sheets for break-out box -VAS 6606/3-1-
- Set of cables -VAS 6606/7-

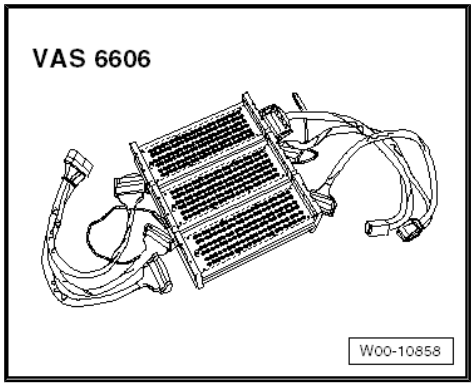

Note

- *Always make sure that the cables are properly connected.*
- *Do not use damaged or worn tools and accessories.*
- *Observe operating instructions for break-out box -VAS 6606- .*

– Connect all cables -VAS 6606/7- to break-out boxes -VAS 6606- .

– Use the following sheets:

- Sheets -VAS 6606/1-1- for break-out box VAS 6606/1
- Sheets -VAS 6606/2-1- for break-out box VAS 6606/2
- Sheets -VAS 6606/3-1- for break-out box VAS 6606/3

Note

Make sure that all push-in bridges are inserted completely in all break-out boxes.

Copyright. Copying for private or commercial purposes, in part or in whole, is not permitted unless authorised by AUDI AG. AUDI AG does not guarantee or accept any liability with respect to the correctness of information in this document. Copyright by AUDI AG.

– Connect earth strap to a break-out box and to an earth point on the vehicle.

– Remove engine control unit ⇒ page 61 .

– Connect engine control unit to cable -VAS 6606/7-1- .

– Connect cable -VAS 6606/7-2- to vehicle wiring harness.

The connection on the engine control unit consists of a large and a small connector.

The large connector has 105 pins and is assigned to the sheets for the break-out box marked “A 1 to A 105”.

The small connector has 91 pins and is assigned to the sheets for the break-out box marked “B 1 to B 91”.

When a push-in bridge is pulled out, the corresponding wiring connection is disconnected.

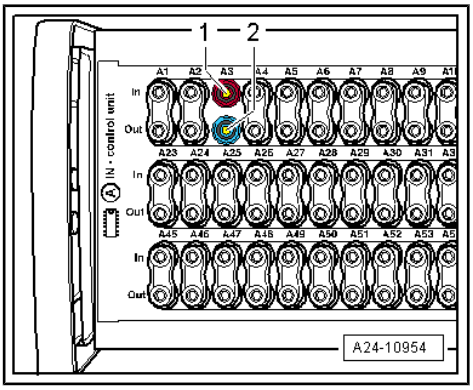

Note

- *The “In” contact -1- (red socket) leads to the engine control unit.*
- *The “Out” contact -2- (blue socket) leads to the wiring harness.*

– Carry out test as described in appropriate repair procedures.

Installing engine control unit

Installation is performed in the reverse sequence.

The procedure required after connecting the new engine control unit is described in the Guided Fault Finding or Guided Functions.

Note

After completion of the Guided Fault Finding routine, the tester will attempt to erase the event memories of all control units. If this is not successful, the remaining faults registered in the memories must be rectified until all fault entries can be erased.

9.2 Removing and installing engine control unit -J623-

Special tools and workshop equipment required

Protected by copyright. Copying for private or commercial purposes, in part or in whole, is not permitted unless authorised by AUDI AG. AUDI AG does not guarantee or accept any liability with respect to the correctness of information in this document. Copyright by AUDI AG.

- Removal lever -80 - 200-

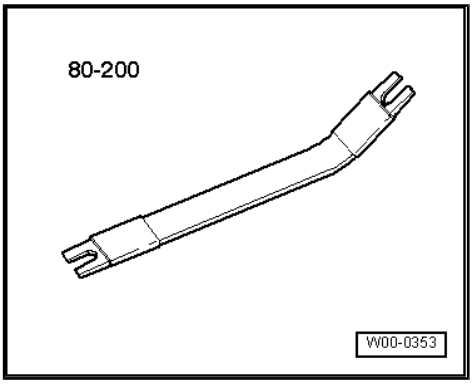

Removing

– When renewing engine control unit, select diagnosis object “Replace engine control unit” in “Guided Functions” mode of vehicle diagnostic tester.

– Switch off ignition and remove ignition key.

– Remove wiper arms ⇒ Electrical system; Rep. Gr. 92 .

Caution

Risk of damage to plenum chamber cover.

- *Apply a small amount of soap solution to transition between windscreen and plenum chamber cover.*

– Detach seal -1- from plenum chamber cover.

– Starting at edge of windscreen, carefully pull plenum chamber cover -2- vertically upwards off retainer at windscreen -arrows-.

– Disengage plenum chamber cover at outer plenum chamber covers -3-; lift plenum chamber cover at centre and disengage from guides -4- at side.

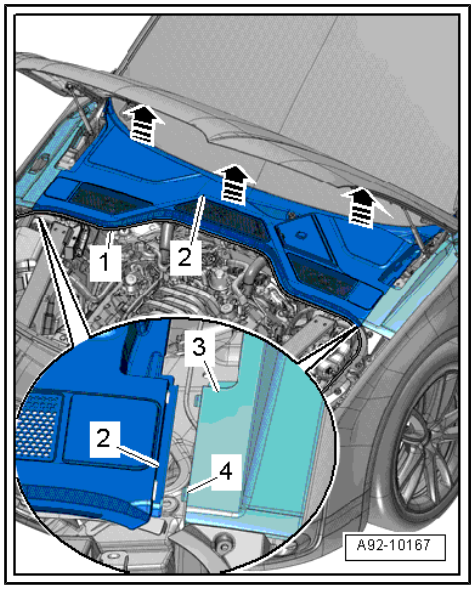

– Move clear wiring harness at plenum chamber cover on bulkhead on both sides (release catches -arrows-).

– Detach electrical connector -1- from bracket and unplug.

– Use removal lever -80 - 200- to move electrical wiring harness at body brace clear.

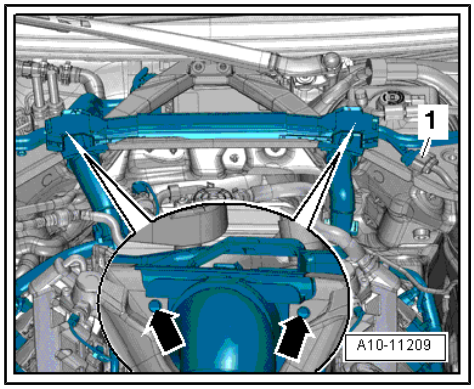

– Remove bolts -1, 2, 3- and -arrows- and detach body brace.

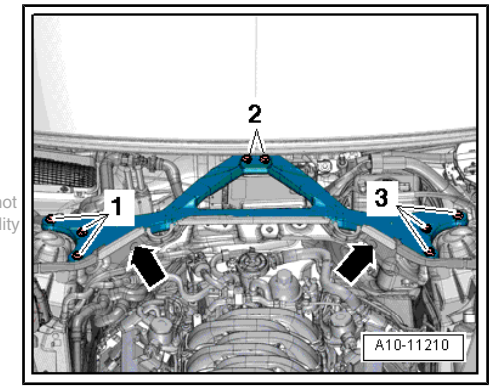

Protected by copyright. Copying for private or commercial purposes, in part or in whole, is not permitted unless authorised by AUDI AG. AUDI AG does not guarantee or accept any liability with respect to the correctness of information in this document. Copyright by AUDI AG.

– Release clips -arrows- and take out engine control unit -J623- -2-.

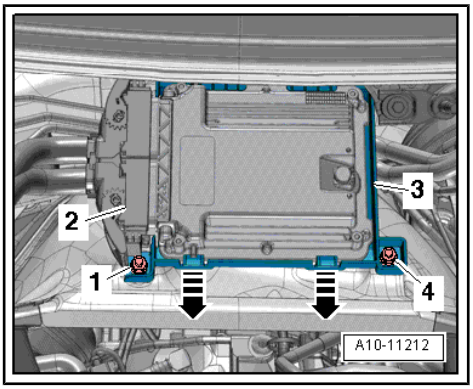

Note

Disregard -items 1, 3, 4-.

– Release connectors on engine control unit -J623- and unplug connectors.

– Take out old engine control unit -J623- and connect new engine control unit -J623- .

Installing

Installation is performed in the reverse sequence.

Protected by copyright. Copying for private or commercial purposes, in part or in whole, is not permitted unless authorised by AUDI AG. AUDI AG does not guarantee or accept any liability with respect to the correctness of information in this document. Copyright by AUDI AG.

– Install body brace ⇒ Rep. Gr. 40 .

– Carefully clip cowl panel trim into retainer at windscreen.

– Install wiper arms.

The procedure required after connecting the new engine control unit is described in the Guided Fault Finding or Guided Functions.

28 – Ignition system

1 General notes and safety precautions

1.1 General notes on ignition system

- The engine control unit has a self-diagnosis capability.
- A voltage of at least 11.5 V is required for proper operation of the electrical components.
- Certain tests may lead to entries being stored in the event memory of the engine control unit. The event memory should therefore be interrogated and (if necessary) erased after completing the tests and any repair work that may be required.
- If the engine starts, runs for a short period and then cuts out after completing fault finding, repairs or component tests, this may be due to the immobiliser disabling the engine control unit. The event memory must then be interrogated and, if necessary, the control unit must be adapted.

1.2 Safety precautions

Note the following if testers and measuring instruments have to be used during a road test:

WARNING

Accidents can be caused if the driver is distracted by test equipment while road-testing, or if test equipment is not properly secured.

Persons sitting in the front passenger's seat could be injured if the airbag is triggered in an accident.

- *The use of test equipment while driving causes distraction.*
- *There is an increased risk of injury if test equipment is not secured.*
- *Test equipment must always be secured on the rear seat with a strap and operated from the rear seat by a second person.*

Subject to copyright. Copying for private or commercial purposes, in part or in whole, is not permitted unless authorised by AUDI AG. AUDI AG does not guarantee or accept any liability with respect to the correctness of information in this document. Copyright by AUDI AG.

To prevent injuries to persons and/or damage to the fuel injection and ignition system, the following must be noted:

- Persons wearing a cardiac pacemaker must at all times maintain a safe distance from high-voltage components such as the ignition system and gas-discharge headlights.
- Do not touch or disconnect ignition wiring when the engine is running or being turned at starter speed.
- The ignition must be switched off before disconnecting or connecting ignition system wiring, high-voltage wires and test leads.
- If you want to crank the engine at starting speed without actually starting it (e.g. compression test), first unplug the connectors from the ignition coils and the injectors. After completing the work, interrogate and erase the event memory.
- Always switch off the ignition before cleaning the engine.

Caution

To prevent damage to the electronic components when disconnecting the battery:

- *Observe notes on procedure for disconnecting the battery.*
- *Always switch off the ignition before disconnecting the battery.*

– Disconnect battery ⇒ Electrical system; Rep. Gr. 27 .

Protected by copyright. Copying for private or commercial purposes, in part or in whole, is not permitted unless authorised by AUDI AG. AUDI AG does not guarantee or accept any liability with respect to the correctness of information in this document. Copyright by AUDI AG.

2 Servicing ignition system

2.1 Test data

Test data		4.2 ltr. / 4V / 273 kW engine
Idling speed (not adjustable)		approx. 650 rpm [1)]
Ignition timing		Not adjustable (determined by control unit)
Ignition system		Multi-coil system with 8 ignition coils (output stages integrated) connected directly to spark plugs via spark plug connectors
Spark plugs	Designations	ETKA (Electronic parts catalogue)
	Removing and installing	⇒ Maintenance ; Booklet 410
Firing order		1-5-4-8-6-3-7-2
• [1)] Depending on demands placed on engine control unit.		

2.2 Ignition system - exploded view

1 - Connector for ignition coil
- ❑ 4-pin

2 - Bolt
- ❑ 10 Nm

3 - 3-pin connector

4 - Hall sender
- ❑ Hall sender -G40- (cylinder bank 1)
- ❑ Hall sender 3 -G300- (cylinder bank 1)
- ❑ Hall sender 2 -G163- (cylinder bank 2)
- ❑ Hall sender 4 -G301- (cylinder bank 2)
- ❑ Removing and installing ⇒ page 70

5 - O-ring
- ❑ Renew if damaged
- ❑ Lubricate lightly with clean engine oil

6 - Bolt
- ❑ 20 Nm
- ❑ Tightening torque influences the function of the knock sensor

7 - Knock sensors
- ❑ Contact surfaces between knock sensor and cylinder block must be free of corrosion, oil and grease.

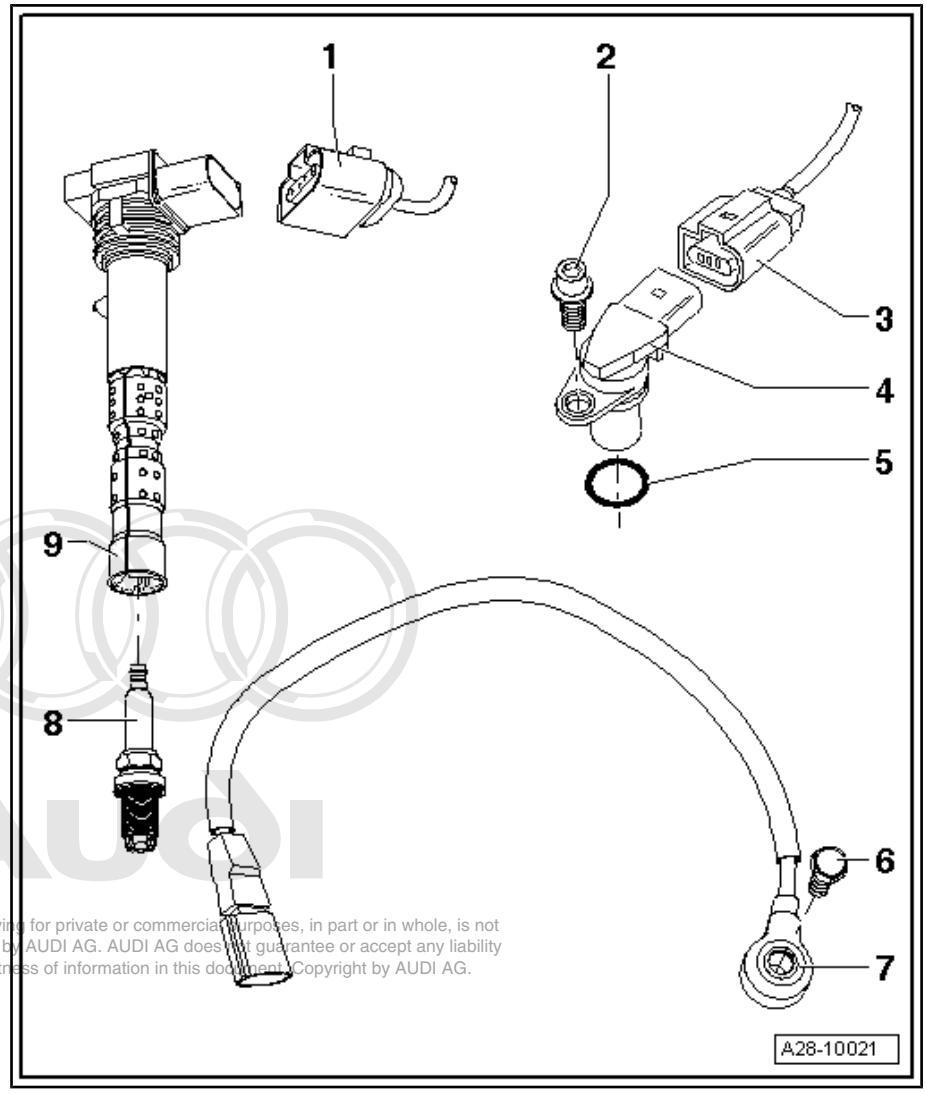

Protected by copyright. Copying for private or commercial purposes, in part or in whole, is not permitted unless authorised by AUDI AG. AUDI AG does not guarantee or accept any liability with respect to the correctness of information in this document. Copyright by AUDI AG.

- ❑ Knock sensor 1 -G61- (cylinder bank 1)
- ❑ Knock sensor 2 -G66- (cylinder bank 1)
- ❑ Knock sensor 3 -G198- (cylinder bank 2)
- ❑ Knock sensor 4 -G199- (cylinder bank 2)
- ❑ Removing and installing ⇒ page 67

8 - Spark plug

- ❑ Remove and install with spark plug socket and extension -3122 B- ⇒ Maintenance ; Booklet 410
- ❑ 30 Nm

9 - Ignition coil

- ❑ Ignition coil 1 with output stage -N70-
- ❑ Ignition coil 2 with output stage -N127-
- ❑ Ignition coil 3 with output stage -N291-
- ❑ Ignition coil 4 with output stage -N292-
- ❑ Ignition coil 5 with output stage -N323-
- ❑ Ignition coil 6 with output stage -N324-
- ❑ Ignition coil 7 with output stage -N325-
- ❑ Ignition coil 8 with output stage -N326-
- ❑ Removing and installing ⇒ page 67
- ❑ Use puller -T40039- for removal

Copyright by AUDI AG. Copying for private or commercial purposes, in part or in whole, is not permitted unless authorised by AUDI AG. AUDI AG does not guarantee or accept any liability with respect to the correctness of information in this document. Copyright by AUDI AG.

2.3 Removing and installing ignition coils

Special tools and workshop equipment required

- ♦ Puller -T40039-

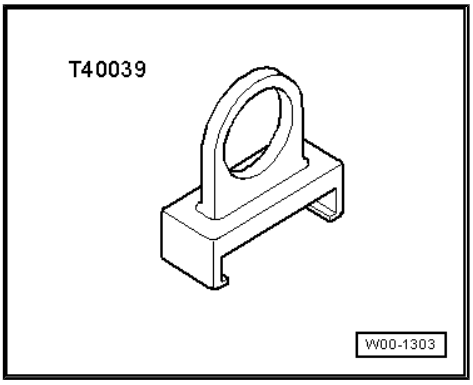

Removing ignition coils on cylinder bank 1

– Loosen hose clips -1 and 2- and remove air pipe (right-side).

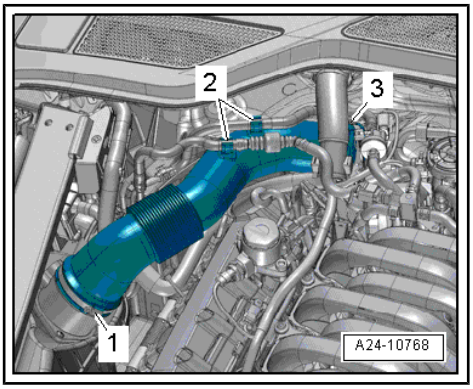

– Remove bolts -1- and -2-.
– Pull ignition coils approx. 30 mm out of spark plug holes using puller -T40039- .
– Release electrical connectors and pull all connectors off ignition coils at the same time.

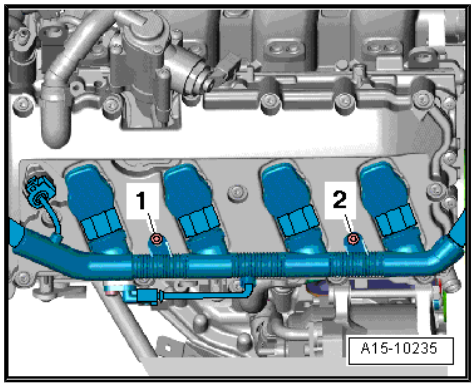

– Pull ignition coils out of spark plug apertures using puller -T40039- .

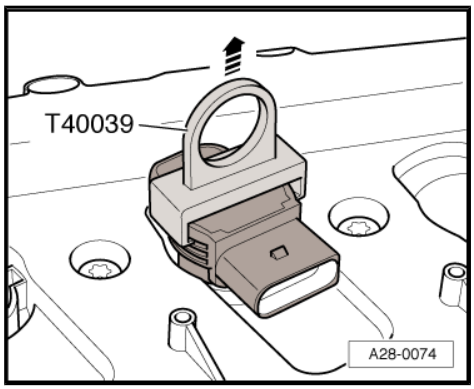

Removing ignition coils on cylinder bank 2

– Loosen hose clips -1 and 2- and remove air pipe (left-side).
– Pull dipstick -1- out of guide tube.

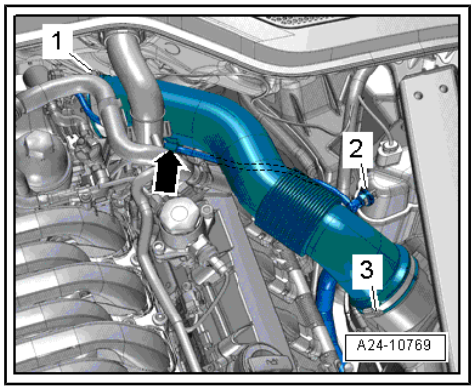

– Remove bolts -2- and -3-.
– Pull ignition coils approx. 30 mm out of spark plug holes using puller -T40039- .
– Release electrical connectors and pull all connectors off ignition coils at the same time.

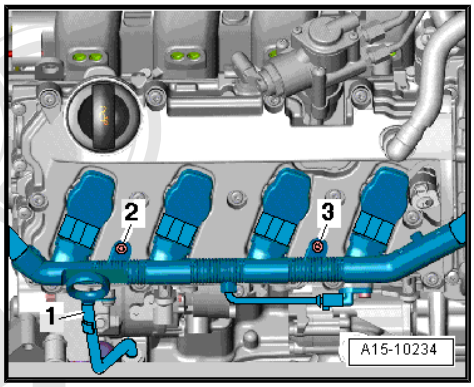

Protected by copyright. Copying for private or commercial purposes, in part or in whole, is not permitted unless authorised by AUDI AG. AUDI AG does not guarantee or accept any liability with respect to the correctness of information in this document. Copyright by AUDI AG.

– Pull ignition coils out of spark plug apertures using puller -T40039- .

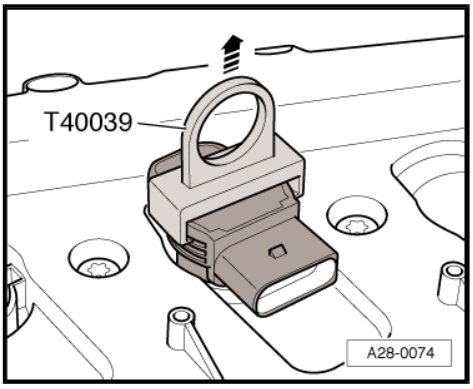

Installing

– Fit all ignition coils loosely into spark plug holes.

– Align the ignition coils with the connectors and attach all connectors onto ignition coils simultaneously.

– Press ignition coils onto spark plugs by hand evenly (do NOT use tool).

The remaining installation steps are carried out in the reverse sequence.

Tightening torque

Component	Nm
Wiring guide for ignition coils to cylinder head cover	5

Protected by copyright. Copying for private or commercial purposes, in part or in whole, is not permitted unless authorised by AUDI AG. AUDI AG does not guarantee or accept any liability with respect to the correctness of information in this document. Copyright by AUDI AG.

2.4 Removing and installing knock sensors -G61- , -G66- , -G198- , -G199-

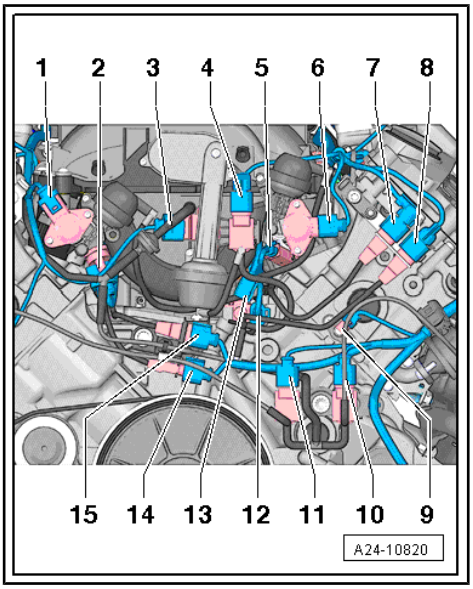

Electrical connectors

7 - Knock sensor 3 -G198-

8 - Knock sensor 4 -G199-

14 - Knock sensor 2 -G66-

15 - Knock sensor 1 -G61-

Removing

WARNING

- *The fuel system operates under high pressure. The pressure in the high-pressure part of the injection system must be reduced to a residual pressure prior to opening the system ⇒ page 3 .*
- *A clean cloth must then be wrapped around the connection and the residual pressure dissipated by carefully loosening the connection.*
- *Observe notes on procedure for disconnecting the battery ⇒ Rep. Gr. 27 .*

– Remove intake manifold ⇒ page 23 .

Remove appropriate knock sensor on cylinder bank (right-side).

12 - Knock sensor 1 -G61-

13 - Knock sensor 2 -G66-

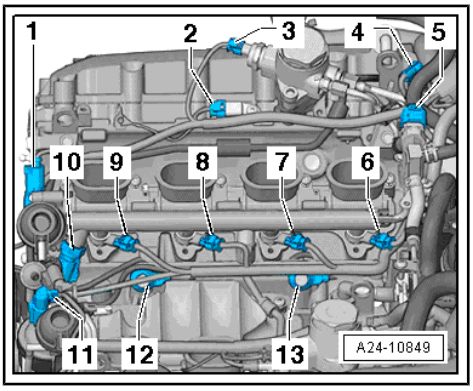

Remove appropriate knock sensor on cylinder bank (left-side).

11 - Knock sensor 3 -G198-

10 - Knock sensor 4 -G199-

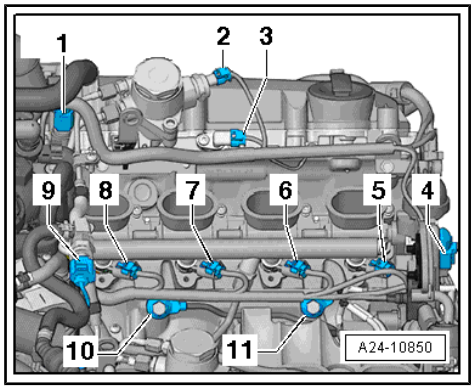

Installing

– Re-install whichever knock sensor was removed.

Note

The tightening torque influences the function of the knock sensor.

Tightening torques for knock sensors: refer to exploded view of ignition system ⇒ page 66 .

– Install intake manifold ⇒ page 23 .

2.5 Removing and installing Hall senders

Note

- *The following Hall senders are installed on cylinder bank 1 (right-side): Hall sender -G40- and Hall sender 3 -G300-*
- *The following Hall senders are installed on cylinder bank 2 (left-side): Hall sender 2 -G163- and Hall sender 4 -G301-*
- *For fitting locations of the four Hall senders, refer to overview of fitting locations ⇒ page 7 .*

– Remove air pipe (right-side) to remove Hall sender 3 -G300- on cylinder bank 1 (release hose clips -1 and 2-).

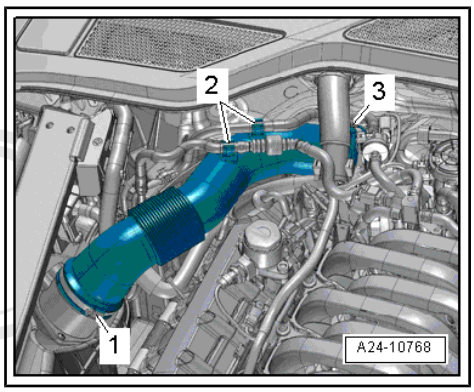

– Remove air pipe (left-side) to remove Hall sender 4 -G301- on cylinder bank 2 (release hose clips -1 and 2-).

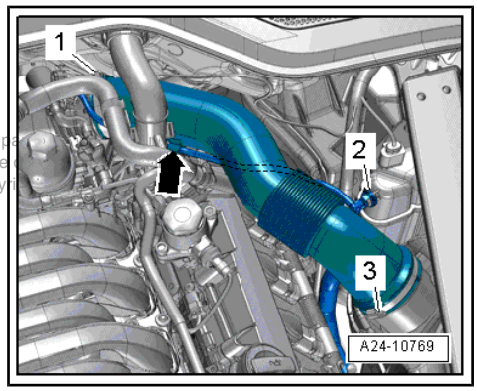

Installing

Protected by copyright. Copying for private or commercial purposes, in p
permitted unless authorised by AUDI AG. AUDI AG does not guarantee
with respect to the correctness of information in this document. Copy

Note

Renew O-ring if damaged.

– Lubricate O-ring with engine oil and carefully press in Hall sender by hand.

– Secure Hall sender and plug back connector.

- Tightening torques for Hall senders: refer to exploded view of ignition system ⇒ page 66 .

– The remaining installation steps are carried out in the reverse sequence.

2.6 Removing and installing engine speed sender -G28-

Removing

– Release fasteners -1, 2, 3- and remove noise insulation panels.

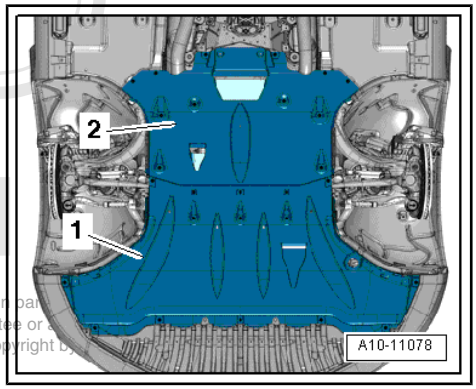

Protected by copyright. Copying for private or commercial purposes, in par
permitted unless authorised by AUDI AG. AUDI AG does not guarantee or
with respect to the correctness of information in this document. Copyright b

– Unplug electrical connector -2-.

– Unscrew bolt -1- and remove engine speed sender -G28- .

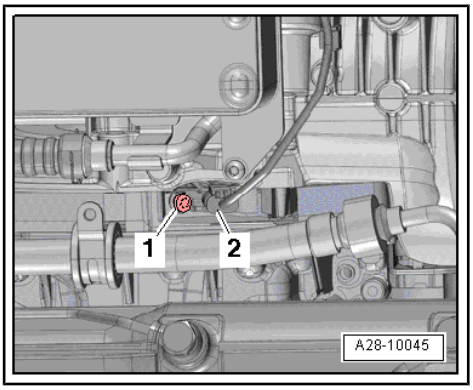

Installing

Install in reverse order.

Tightening torque

Component	Nm
Engine speed sender -G28-	9