Body Repairs

Audi A8 2010 ➤

Edition 05.2013

Repair Group overview for Body Repairs

Repair Group

00 - Technical data

50 - Body - front

51 - Body - centre

53 - Body - rear

Technical information should always be available to the foremen and mechanics, because their careful and constant adherence to the instructions is essential to ensure vehicle road-worthiness and safety. In addition, the normal basic safety precautions for working on motor vehicles must, as a matter of course, be observed.

D3E80249DED

Contents

00 – Technical data

1 General notes

(AKI000121; Edition 05.2013)

This Manual describes only selected repair operations. A description is given where the repair method differs from the original manufacturing process.

Where the repair operation is not described: Separate the original joint and repair using a replacement part.

If no description is given for any sub-parts supplied, these should be matched up and butt welded with an SG continuous seam.

2 Vehicle identification data

2.1 Vehicle identification number

The vehicle identification number is located on the left side of the windscreen.

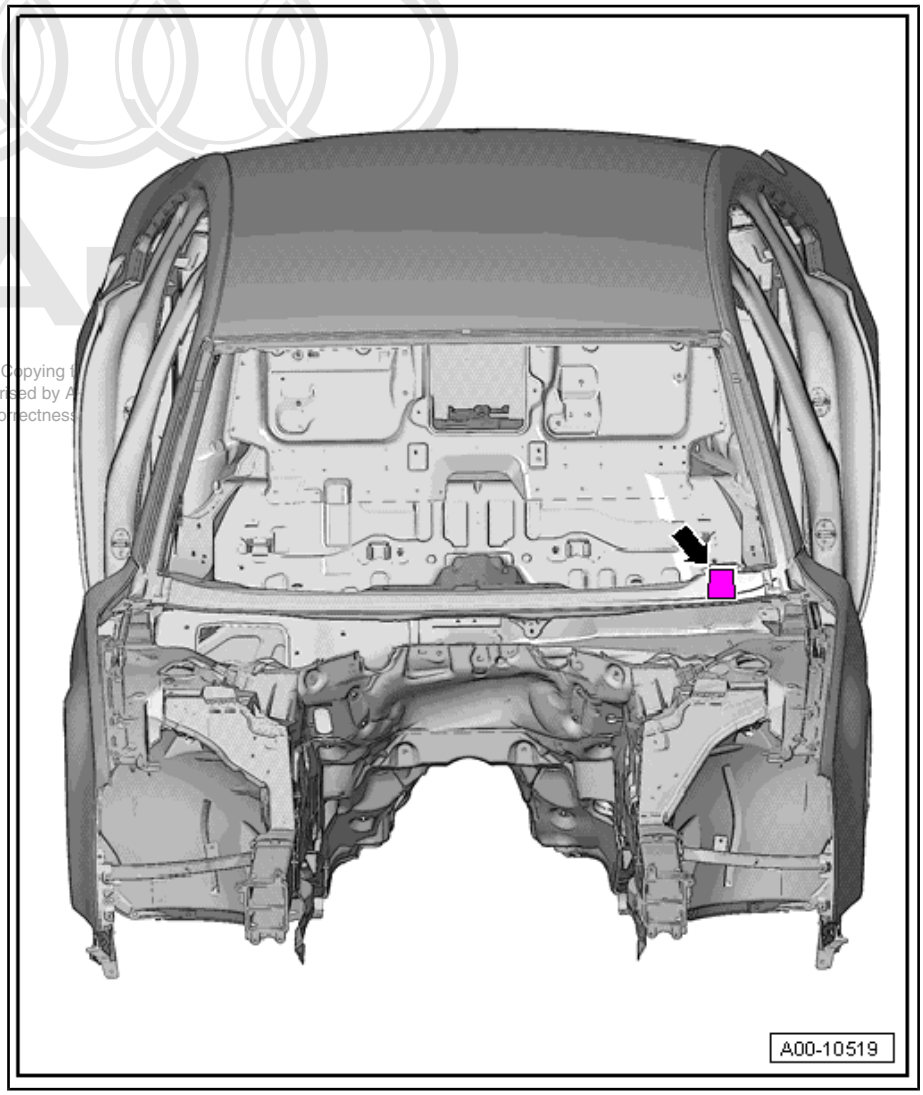

2.2 Vehicle data sticker

The vehicle data sticker -arrow- is located at the rear of the spare wheel well (left-side in direction of travel).

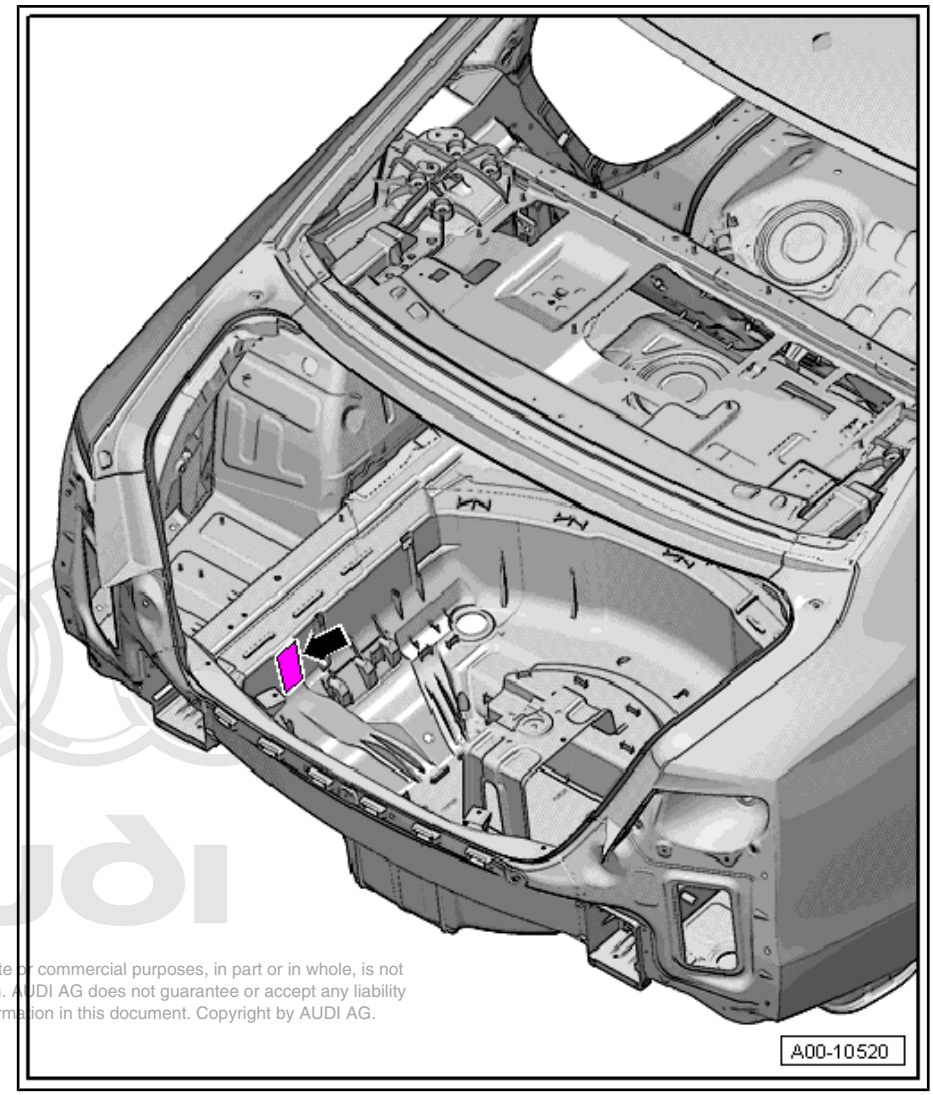

3 Repairing joints with flow-drill screws

The repair methods required for the purely aluminium body parts are the same as the existing methods for the other Audi models with aluminium body.

Flow-drill screws

The advantages of threaded fasteners for workshop repairs can now be used to the full with the aid of the sockets for flow-drill screws - VAS 6426- .

3.1 Repair methods

Loosening flow-drill screws

– If the heads of the flow-drill screws are readily accessible, use socket for flow-drill screws - VAS 6426- .

– If the heads of the flow-drill screws are covered with underseal or similar sealing material, use socket for flow-drill screws - VAS 6426/1- .

3.1.1 If replacement upper panel is supplied with pre-drilled holes:

– Remove flow-drill screws using socket for flow-drill screws - VAS 6426 - or VAS 6426/1 and separate joint.

– Take off upper panel.

Preparing joints for adhesive application

– Clean bonding area with cleaning solution - D 009 401 04- .

– Prepare bonding area with silicate stone - DA 009 800 - and clean.

– Apply aluminium primer - DA 009 801 - to bonding surfaces using applicator - D 009 500 25 - .

– Apply 2-component epoxy adhesive - DA 001 730 A2- to entire area using pneumatic glue gun - V.A.G 2005 B- .

– Fit new part in position and secure with new screws using socket for flow-drill screws - VAS 6426- (tighten to 8 Nm).

3.1.2 If replacement upper panel is not supplied with pre-drilled holes:

– Remove flow-drill screws using socket for flow-drill screws - VAS 6426 - or VAS 6426/1 and separate joint.

– Take off upper panel.

– Insert hole markers - VAS 6631- into existing FDS threads.

– Fit new part in position.

– Mark holes on new part with light blows from a rubber-headed hammer.

> ⚠ **Caution**
>
> *Allow for offset resulting from hole markers; if necessary mark just one surface at a time.*

– Take off upper panel.

– Drill 7 mm Ø holes in upper panel.

Preparing joints for adhesive application

– Clean bonding area with cleaning solution - D 009 401 04- .
– Prepare bonding area with silicate stone - DA 009 800 - and clean.
– Apply aluminium primer - DA 009 801 - to bonding surfaces using applicator - D 009 500 25 - .
– Apply 2-component epoxy adhesive - DA 001 730 A2- to entire area using pneumatic glue gun - V.A.G 2005 B- .
– Fit new part in position and secure with new screws using socket for flow-drill screws - VAS 6426- (tighten to 8 Nm).

3.1.3 Renewing upper and lower panels

– Remove flow-drill screws using socket for flow-drill screws - VAS 6426 - or VAS 6426/1 and separate joint.
– Take off both panels.
– Drill 4 mm Ø holes in both panels at the same distances as on the original joint.
– Detach new parts.
– Drill out 4 mm Ø holes in upper panel to 7 mm Ø.

Preparing joints for adhesive application

– Clean bonding area with cleaning solution - D 009 401 04- .
– Prepare bonding area with silicate stone - DA 009 800 - and clean.
– Apply aluminium primer - DA 009 801 - to bonding surfaces using applicator - D 009 500 25 - .
– Apply 2-component epoxy adhesive - DA 001 730 A2- to entire area using pneumatic glue gun - V.A.G 2005 B- .
– Fit new parts in position and secure with new screws using socket for flow-drill screws - VAS 6426- (tighten to 8 Nm).

3.2 Repair set for flow-drill screws - VAS 6631-

The repair set can be used to mark the holes on new parts where flow-drill screws (FDS) are used. With the aid of the hole finders -VAS 6631-, it is possible to transfer the FDS hole positions on aluminium Audi vehicles when making repairs. The old FDS screws are first loosened with the aid of the socket -VAS 6426/1-. The damaged panel is then removed. Using the ring spanner - VAS 6631/1- (supplied with the repair kit), the hole finders are now screwed into the existing holes in the aluminium panel not being renewed. The new aluminium panel is then fitted on the vehicle and fixed in position with clamps. Using soft blows with a rubber hammer, the holes from the existing panel can now be transferred to the replacement part with the aid of the hole finders. After being marked with the hole positions, the replacement part is removed. Holes are predrilled at these points. It is then possible to secure the new part to the body with flow drill screws using socket -VAS 6426-.

4 Safety notes

Always use an extraction system when performing welding and grinding operations.

Welding and grinding must never be performed simultaneously in the same working area.

Working area must be cleaned at regular intervals as necessary to remove dust.

Compressed air must NOT be used to blow out dust deposits.

The extraction system must be cleaned at regular intervals.

In addition, the relevant accident prevention and trade association regulations must be observed.

5 Bonded joints

WARNING

Pre-treatment applies to old flange only.

– Remove remnants of adhesive, paint, wax, etc.
– Sand bonding surface down to bare metal using a clean sanding disc (grit size P 80 or P 100).
– Treat flanges with silicate stone - DA 009 800 - and holder - VAG 1931- .

A silicate adhesive layer is formed which ensures long-term durability of the bonded joint. The surface becomes matt.

– Use clean brush to remove sanding dust.

Do NOT use solvents.

– Apply a thin coat of aluminium primer - DA 009 801 - using applicator - D 009 500 25 - and allow to flash off.

WARNING

Mask bonding surfaces when painting inner sides.

Parts must be joined and secured in position within 30 minutes as otherwise the formation of a surface skin will result in inadequate adhesion at the flanges.

– Fit rivets and wipe off emerging adhesive.

At temperatures up to 20° C, rivets must be fitted within 90 minutes and at temperatures above 20° C within 40 minutes starting from application of adhesive.

Note

- *For large parts, e.g. roof, the assistance of a second person is required, as otherwise the adhesive will dry before work is completed.*
- *In the event of interruptions lasting up to 30 minutes, press out and discard an approx. 100 mm long bead to ensure that new material is properly mixed. In the event of interruptions lasting longer than 30 minutes, replace mixing nozzle and press out a 100 mm long bead. If several cartridges are required for repair work, the same mixing nozzle can be used.*

6 Laser welding

The laser welding technique employs a high-energy light beam directed onto the weld seam by means of optical lenses or fibre optics.

During the welding process the upper panel is fused onto the partially molten lower panel, creating a welded joint both with and without additional material.

When performing repairs, laser weld seams are replaced by SG continuous weld seams (staggered - with gaps) or pop rivets.

7 Body construction

The Audi A8 2010 employs the aluminium Audi Space Frame (ASF) construction.

The repair methods are basically the same as the familiar aluminium repair methods, except that the combination of aluminium and steel requires a number of new procedures.

This Workshop Manual describes standard repairs and repairs carried out using repair methods which deviate from the original manufacturing process.

Note the following for any repairs which are not described:

Separate at original joint; repair original joint using only genuine replacement parts.

7.1 Ultra-high-strength steel (hot-formed)

The outer side panel is removed to give a clearer illustration.

The inner B-pillar is made of ultra-high strength steel (hot formed).

The inner B-pillar closure plate is made of high-strength steel.

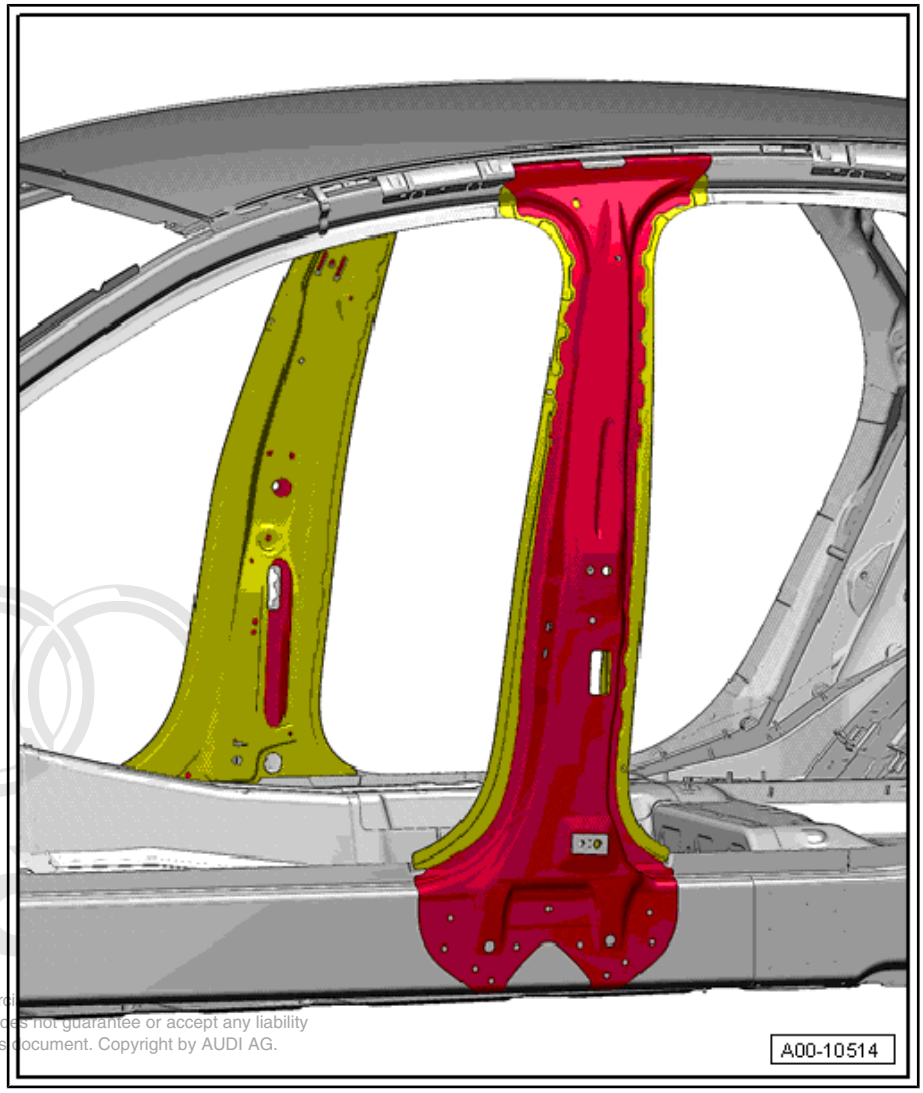

	Colour	Type of steel	Tensile strength / minimum yield strength in Mpa
4	Yellow	High-strength	300 - 590
5	Red	Ultra-high-strength (hot-formed)	> 1400

7.2 Aluminium panels

The body of this vehicle is made mainly of aluminium.

The following illustrations show the various types of aluminium parts in different colours, also including parts made of ultra-high strength hot-formed steel (see table).

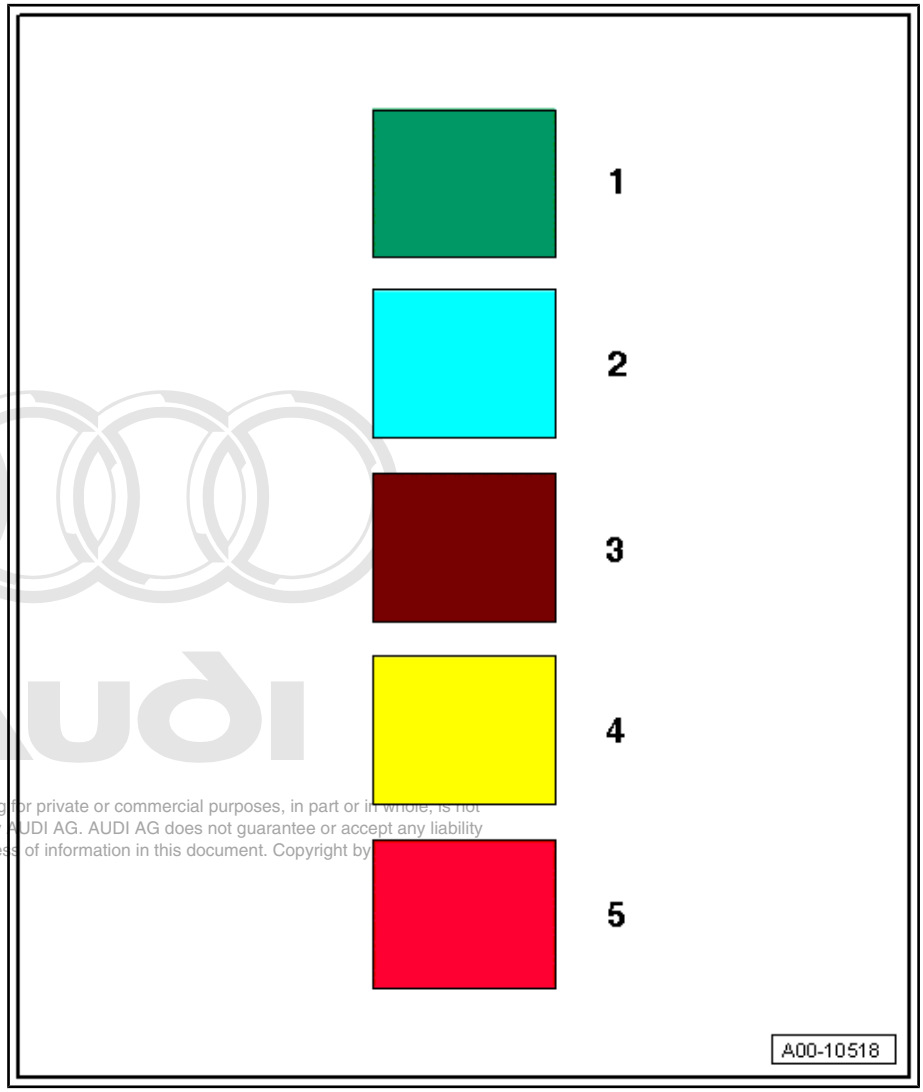

	Colour	Aluminium
1	Green	Aluminium sheet panels
2	Blue	Aluminium extrusions
3	Brown	Cast aluminium profiles

The outer side panel and roof are removed to give a clearer illustration. These panels are made of sheet aluminium.

The outer side panel and roof are removed to give a clearer illustration. These panels are made of sheet aluminium.

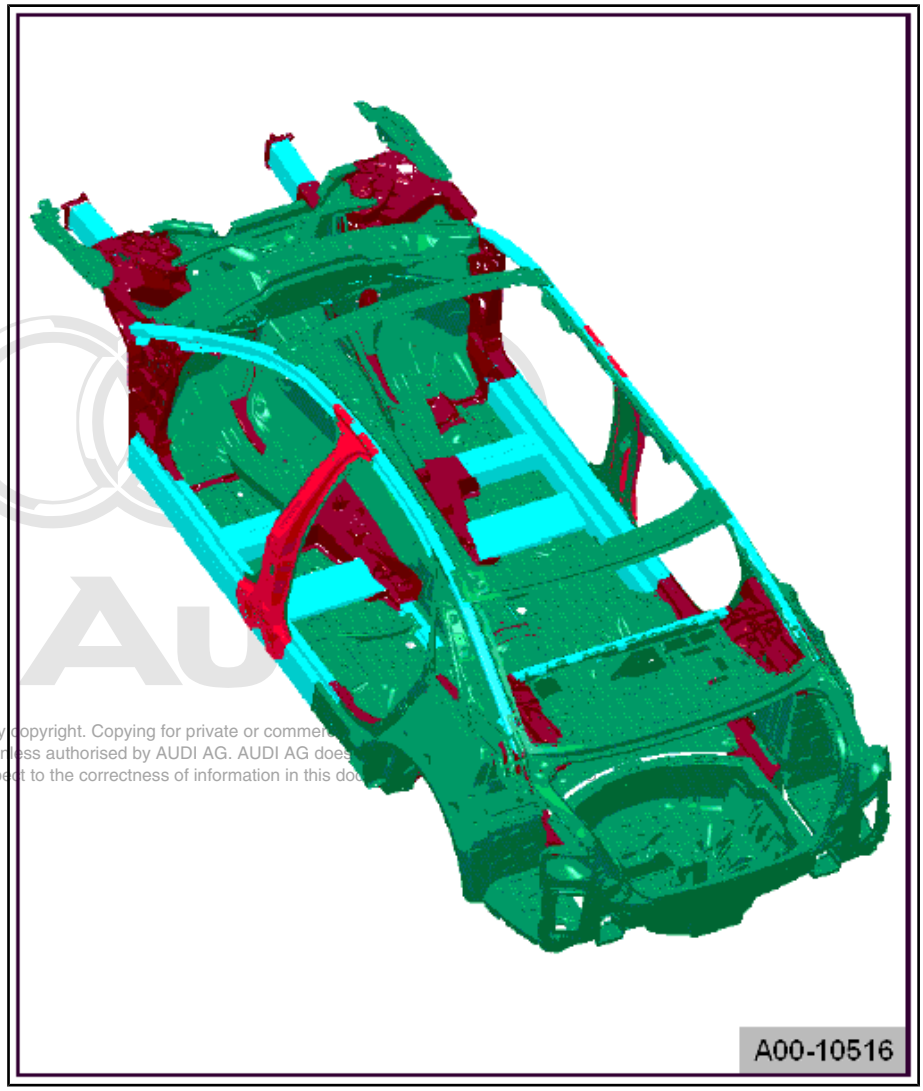

The outer side panel and roof are removed to give a clearer illustration. These panels are made of sheet aluminium.

8 Thread repair for M6 pop rivet nut

If the thread-forming screws WHT 002 605 or WHT 002 612 should fail to hold or are otherwise damaged, the repair screws WHT 006 778 can be used as a substitute. It is then not necessary to drill holes and set the pop rivet nuts.

9 Overview of riveting attachments (pairs of tools)

Note

- *This list is intended for general information. Please refer to the operating instructions provided for a description of the procedure and areas of application.*
- *To increase the life of the riveting attachments, please use cutting oil (commercially available).*

D 1 + D 2 - Pressing out ∅ 3.2 mm punch rivet

D 2 + D 3 - Pressing out ∅ 3.2 mm punch rivet

D 2 + D 5 - Pressing out ∅ 5 mm punch rivet

D 3 + D 5 - Pressing out ∅ 5 mm punch rivet

D 4 + D 5 - Pressing out ∅ 5 mm punch rivet

D 5 + D 12 - Punching ∅ 8 mm hole for weld joint

D 6 + D 7 - Punching and countersinking hole for ∅ 4.8 mm pop rivet

D 8 + D 8 - Re-forming metal panel

D 8 + D 9 - Setting ∅ 4 mm solid rivet

D 10 + D 11 - Punching and countersinking hole for ∅ 4 mm solid rivet

D 13 + D 14 - Pressing out ∅ 5.3 x 7.5 mm punch rivet

D 17 + D 17 - Re-forming metal panel

D 15 + D 16 - Punching and countersinking hole for ∅ 6.0 mm solid rivet

D 17 + D 17 - Setting ∅ 6.0 mm solid rivet

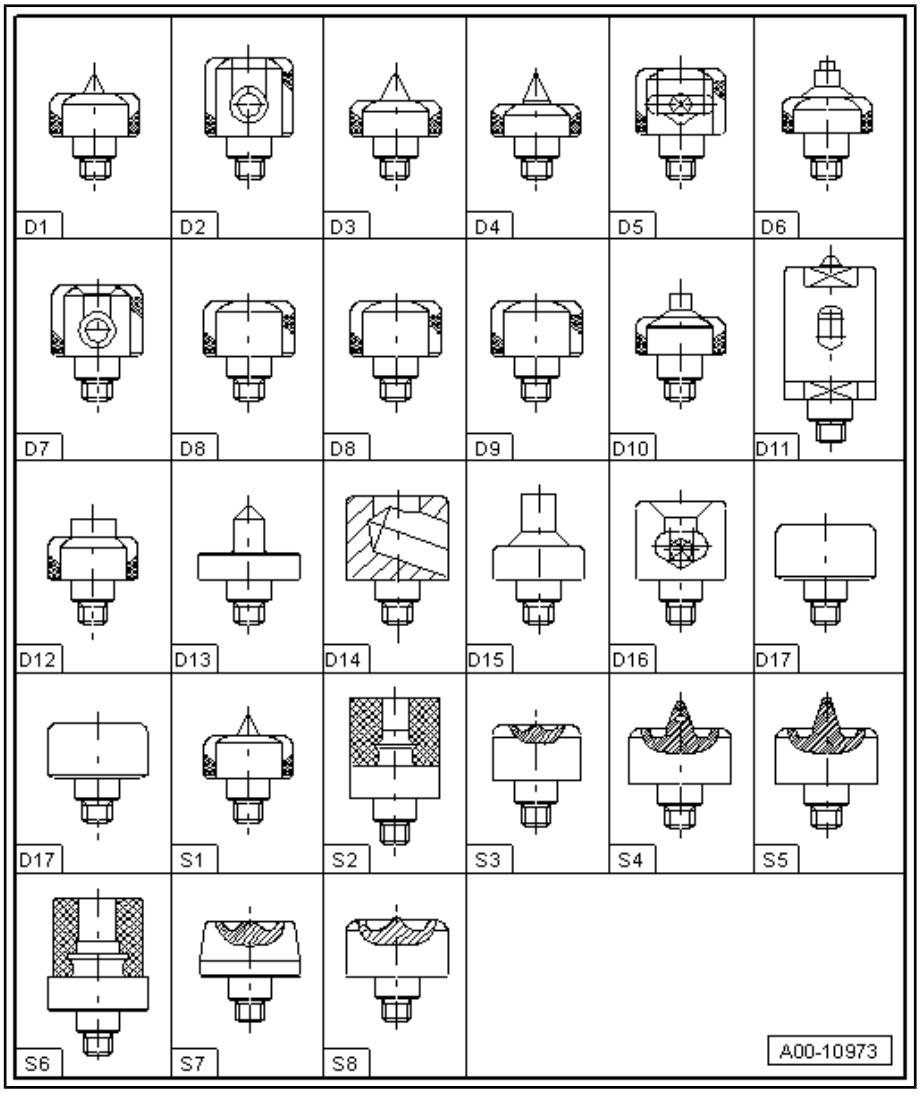

S 1 + D 2 - Pressing out ∅ 3.2 mm punch rivet

S 2 + S 3 - Inserting and setting ∅ 3.2 mm punch rivet

S 4 + D 5 - Pressing out ∅ 5.3 x 5.5 mm punch rivet

S 5 + D 5 - Pressing out ∅ 5.3 x 6.5 mm punch rivet

S 6 + S 7 - Inserting and setting ∅ 5.3 x 5.5 mm punch rivet

S 6 + S 8 - Inserting and setting ∅ 5.3 x 6.5 mm punch rivet

10 Fasteners

Punch rivet	3.35 x 5 mm	4D0 803 217 N
Punch rivet	3.35 x 4 mm	4D0 803 217 Q
Punch rivet	5.3 x 5 mm	4D0 803 217 L
Punch rivet	5.3 x 6.5 mm	4D0 803 217 M
Punch rivet	5.3 x 6 mm	N 909 261 02
Punch rivet	5.3 x 7.5 mm	N 911 365 01
Punch rivet	5 x 4.2 mm	N 911 348 01
Solid rivet (aluminium)	4 x 8 mm	N 103 239 01
Solid rivet (aluminium)	4 x 12 mm	N 103 240 01
Solid rivet (aluminium)	6 x 10 mm	N 107 440 01
Solid rivet (aluminium)	6 x 12 mm	N 107 441 01
Pop rivet (aluminium) with countersunk head		4E0 809 864 A
Pop rivet (aluminium) with round head		8Z0 809 864
Flow-drill screws		WHT 003 873
Threaded rivet	11 mm	N 907 164 01
Threaded rivet	14 mm	N 907 163 01
Threaded rivet	10 mm	N 907 162 01
Threaded rivet	22 mm	N 907 161 01
Threaded rivet	**6 mm**	**N 907 160 01**

11 Dent removal

The danger of over-stretching the material is greater with aluminium than with steel.

Sharp-edged or hard panel beating tools (e.g. steel hammer) should not be used. Use plastic, wood or aluminium hammers instead.

Direct panel beating procedures, i.e. aluminium panel is positioned directly between counter-hold tool and panel beating hammer, should be kept to a minimum.

Unlike the procedure for steel panels, you should begin in the middle of the dent when removing dents on aluminium panels.

Aluminium panels should be pressed rather than beaten.

When finishing, the counterhold tool should be held loosely. If you apply excessive force when finishing you could stretch the material. For this reason you should use a counterhold tool made of hardwood.

If material stretching should occur, it can be eliminated by heating and shrinking.

WARNING

Heat shrinkage temperature max. 150° C.

Caution

If a crack or rupture appears during panel beating, the part must be renewed!

12 Surface treatment

Only use stainless steel wire brushes.

Rough-filing discs must not be used because of the smear effect.

Use sanding discs of grit size P 80 to P 200.

Only use sanding discs, drill bits, millers and cutting disks in conjunction with cleaning block DA 009 802.

Clean surface with paint thinner.

Surface treatment otherwise as for steel.

Note

Aluminium components must be covered when grinding and welding steel parts. If metal swarf/dust makes contact with aluminium, remove immediately to avoid contact corrosion.

WARNING

Use separate tools for steel and aluminium.

Recommended: aluminium tool set with trolley -V.A.G 2010/2-

13 Inaccessible rivets

– Remove paint and oxide layer from rivet head and attachment point for earth clamps.

– Attach earth clamps as close as possible to rivets.

– Set welding current to 150 on display.

– Weld on 4 mm weld stud using a dent remover for aluminium vehicles - VAS 5196- of a type approved by AUDI AG.

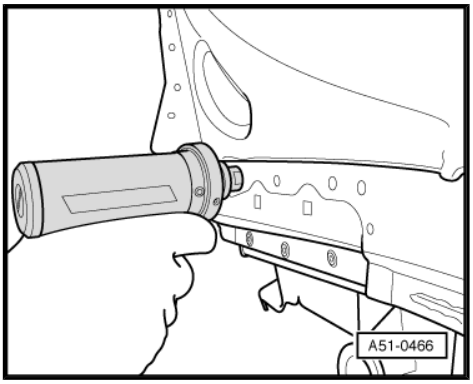

– Pull out weld stud using pneumatic pop riveter - V.A.G 2003- and nozzle from supplementary set pop riveter - V.A.G 2003/1- .

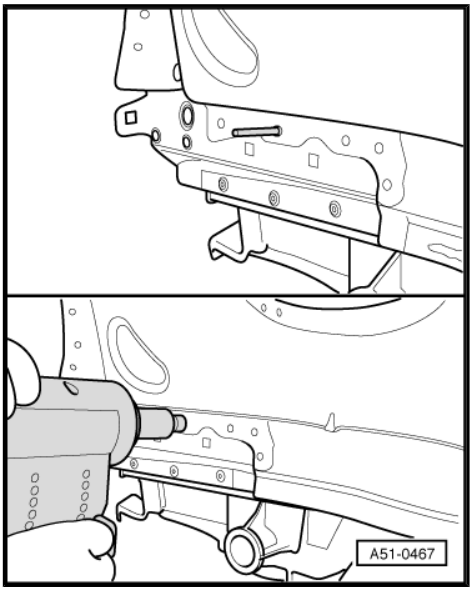

14 Contact corrosion

Contact corrosion can occur if unsuitable fasteners are used on the vehicle (bolts, nuts, washers etc.).

For this reason, only fasteners with a special surface coating have been fitted on the vehicle.

In addition, all rubber and plastic parts and all adhesives are made of non-conductive materials.

Always renew parts if you are in any doubt as to whether the old part can be used again.

Note

Please note the following:

Always use genuine replacement parts (same as original equipment). These have been tested and are aluminium-compatible.

Accessories must be approved by AUDI AG.

Damage caused by contact corrosion is not covered by the warranty.

15 Moulded foam inserts

WARNING

Always observe safety precautions.

Gases which damage the environment and are hazardous to health are given off if spark-generating tools for welding or cutting are used in the vicinity of foam material; do NOT use these methods in foam-filled areas.

Various body cavities of the Audi A8 2010 are fitted with moulded foam inserts.

The foam inserts reduce the noise transmitted to the interior when driving.

These pre-moulded parts are fitted during body manufacture and subsequently increase their volume in the paint shop drying oven at approx. 180 °C after priming.

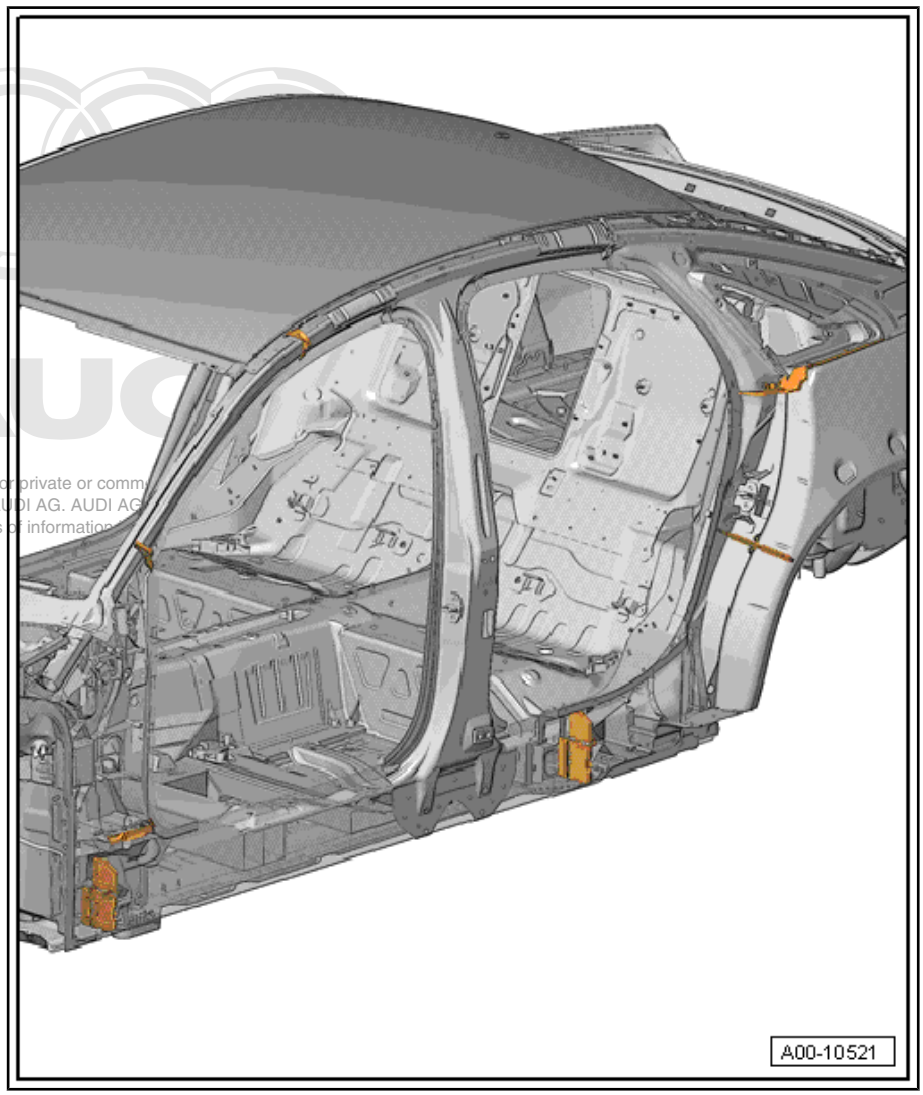

Caution

The moulded foam inserts expand only after reaching approx. 180°C. For this reason, a 2-component filler foam is used when performing repairs.

The material required for workshop repairs is 2-component filler foam - D 506 KD1 A3 - .

As the required temperatures cannot be achieved under normal workshop conditions, proceed as follows:

Requirement

Before continuing with this procedure, ensure that the replacement metal panel is ready for installation, i.e. cut to shape, matched up to the vehicle, corrosion protection applied.

Renewing moulded foam insert

Fix moulded foam insert to vehicle.

Apply 2-component filler foam - D 506 KD1 A3- to replacement part.

Secure the new part in position, gently pressing in the new part in the area of the moulded foam insert, and weld in.

The foam hardens within 25 minutes.

Do not weld (SG) within 15 mm of the foam insert (on either side).

After painting the vehicle the repaired area must be cavity-sealed.

16 Matching the surface contour

Repaired areas must be prepared so that all surfaces, swage lines and panel edges are accurately aligned with the surrounding body contour.

The following requirements must be met:

- After body repair work such as dent removal, welding and filling, etc., the repaired areas and parts must be dry-sanded with a grit size of at least P 80.
- The repaired surfaces must be prepared so that the required paint finish can be achieved in no more than two stages.

For the required surface contour use the following body fillers:

For vehicles with steel body

2-component steel filler set - DA 787 300 A2 -

For vehicles with aluminium body

2-component "diamond" filler aluminium powder - DA 004 200 A2- and hardener - DA 004 201 A1-

WARNING

The use of body solder containing lead is prohibited as of 1st January 2003.

Note

Lead-free body solder is not approved by AUDI AG.

17 Body dimensions

Note

- *Dimensions are only given for checking purposes. Correct dimensions are defined by the alignment bracket set .*
- *Bolts, screws, plugs, trim panels and attached components must be removed before starting the measuring process.*
- *The body dimensions should be measured using the telescopic gauge - VAS 5159- or the telescopic gauge - VAS 5160- .*
- *To avoid inaccurate measurements, make sure the measuring rods are always of equal length.*

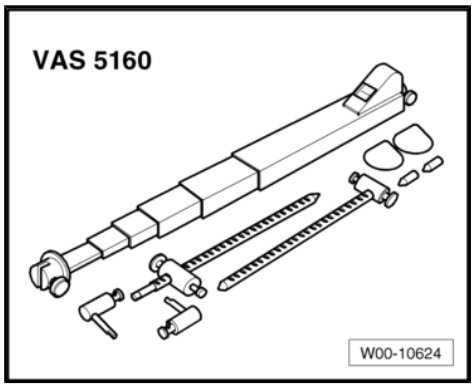

17.1 Body - front

Front bumper mounting

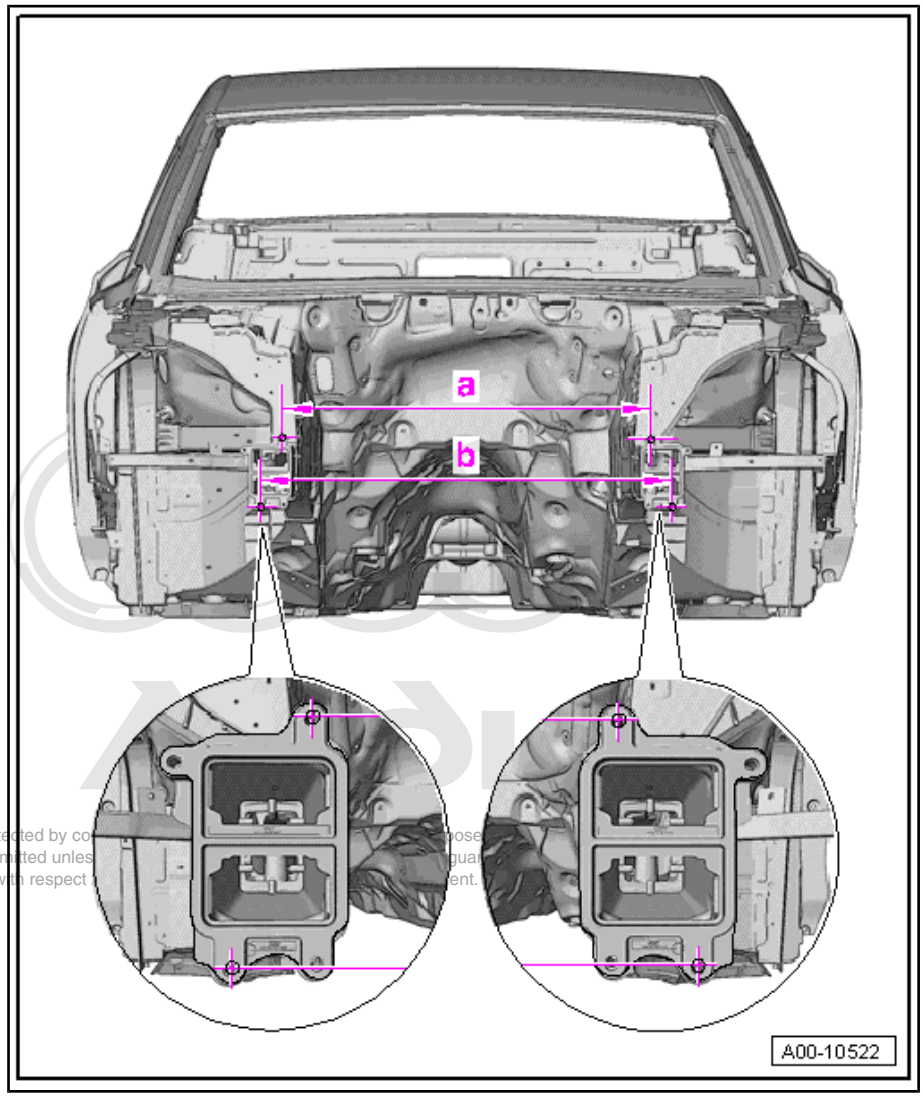

Dimension -a- = 885 mm ± 2.0 mm

Dimension -b- = 989 mm ± 2.0 mm

Length of front longitudinal member (part section)

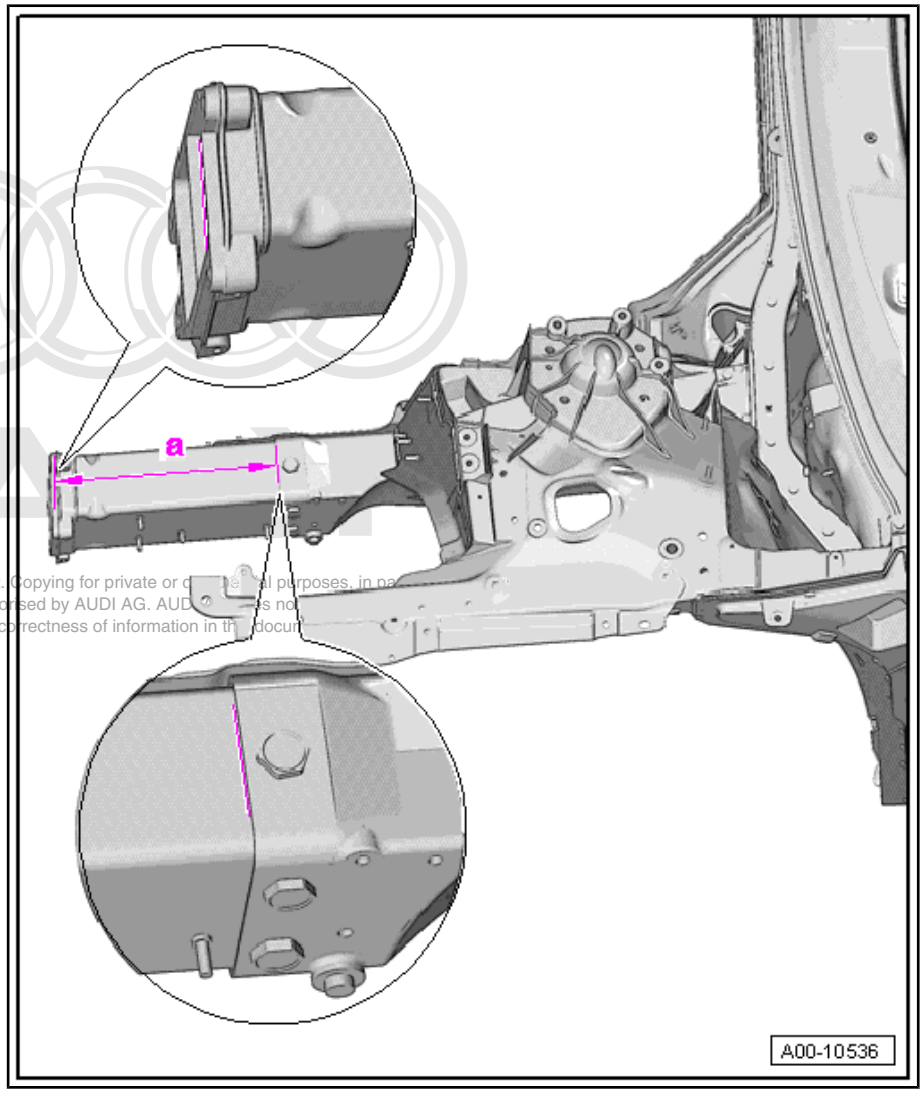

Dimension -a- = 295 mm ± 2.0 mm

Upper front longitudinal member

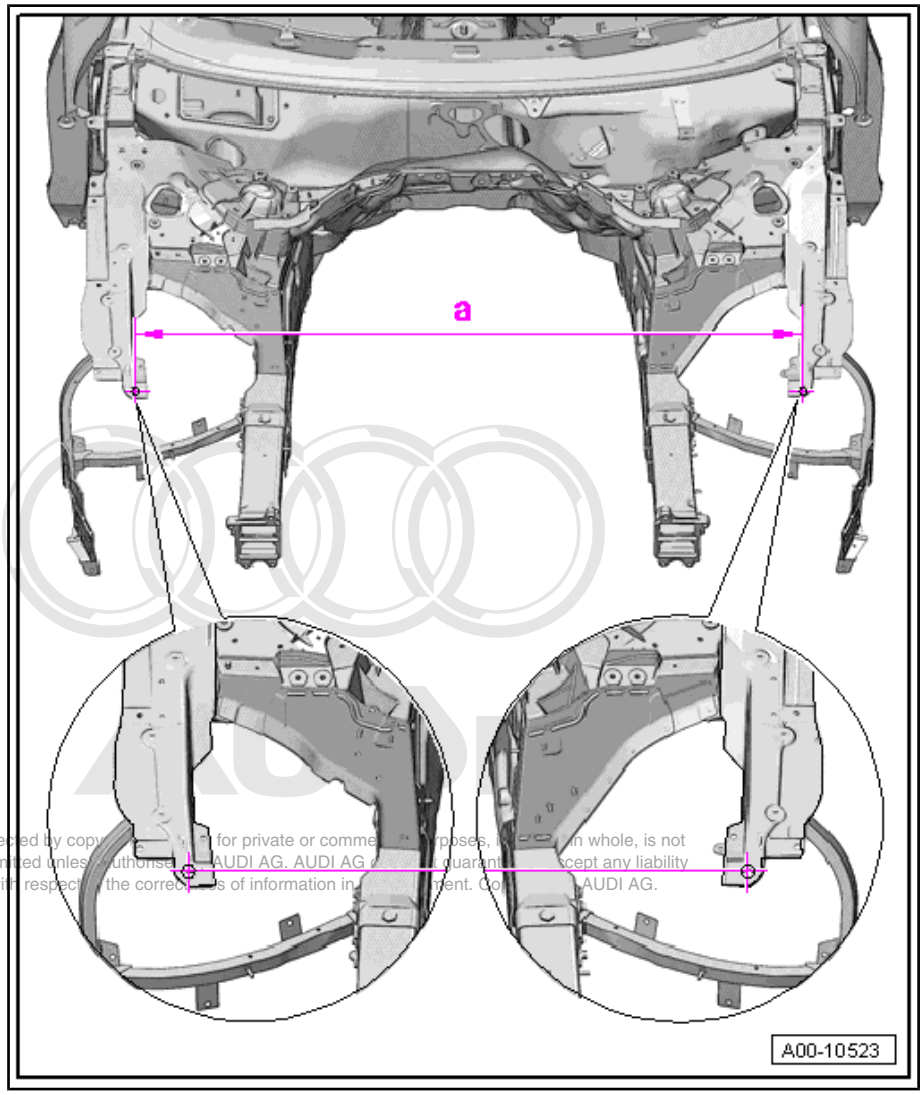

Dimension -a- = 1500 mm ± 2.0 mm

Bonnet hinge mounting

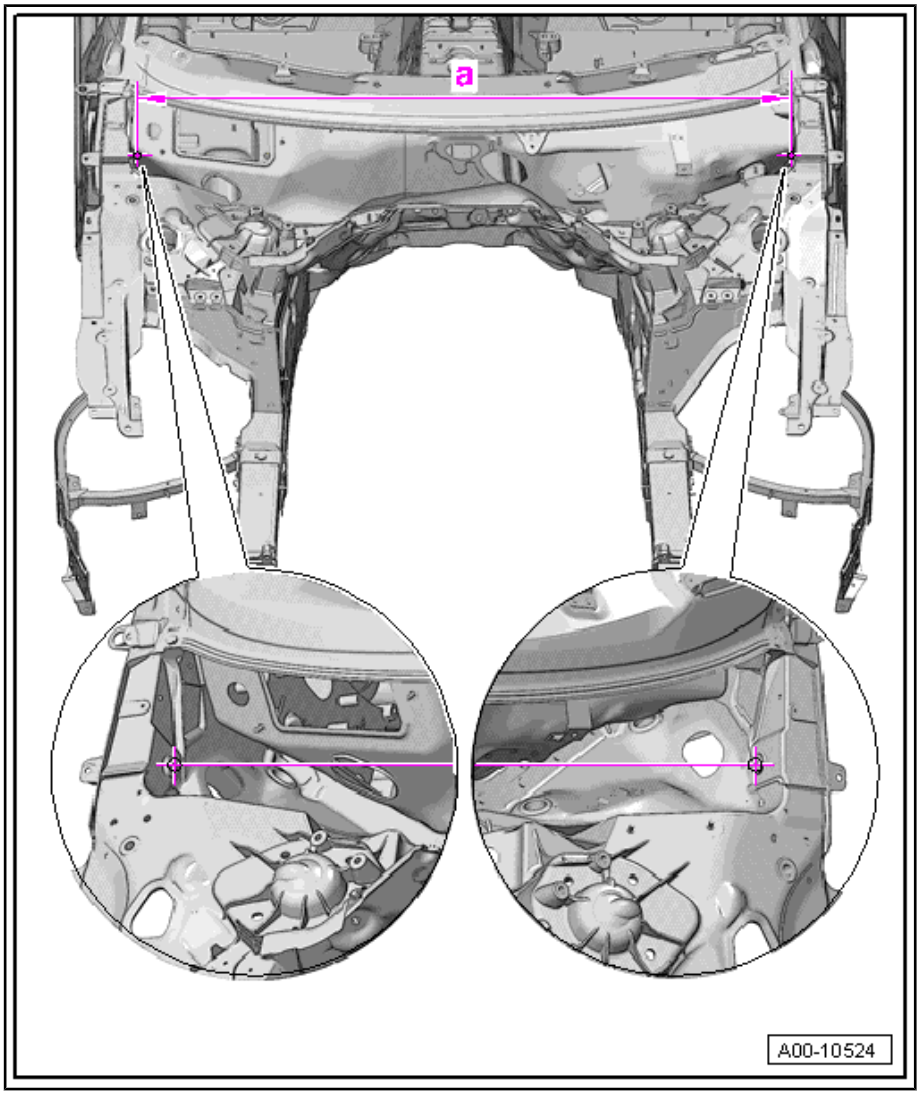

Dimension -a- = 1472 mm ± 2.0 mm

Suspension strut mounting

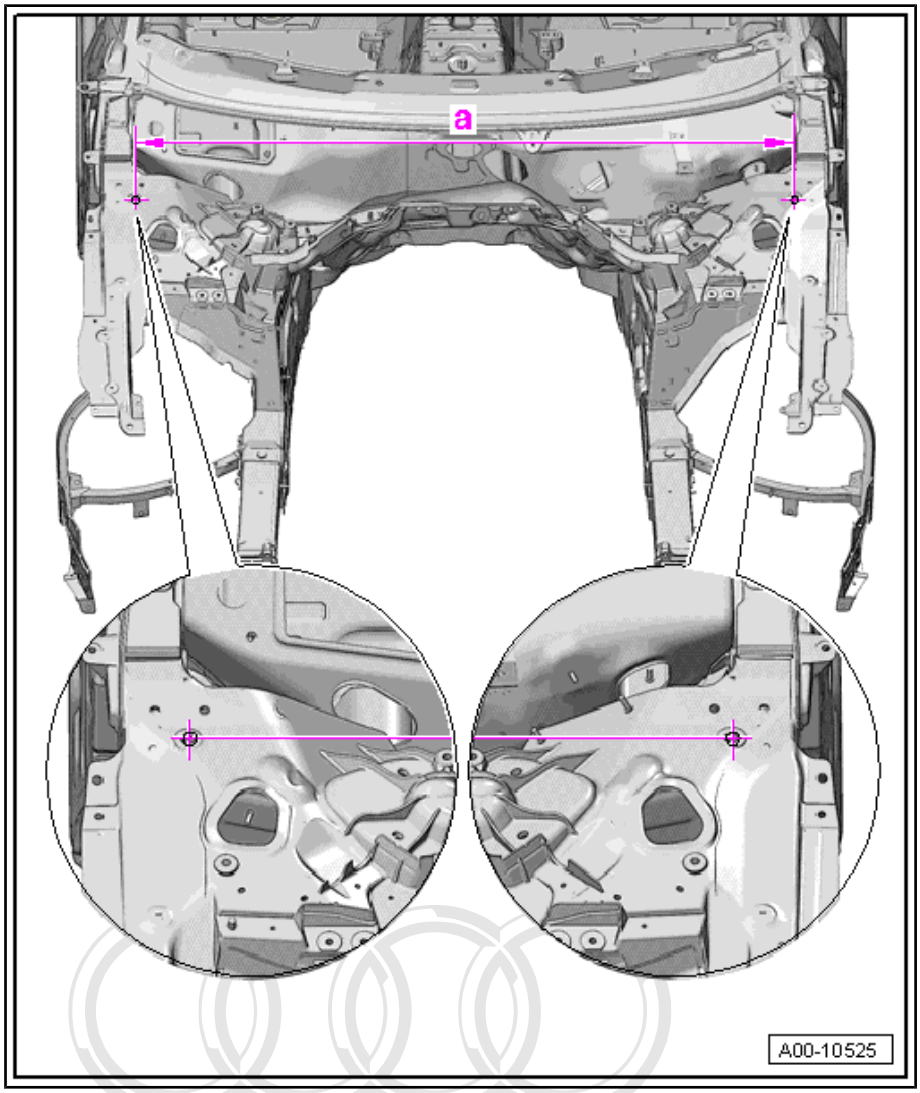

Dimension -a- = 1473 mm ± 2.0 mm

Suspension strut mounting

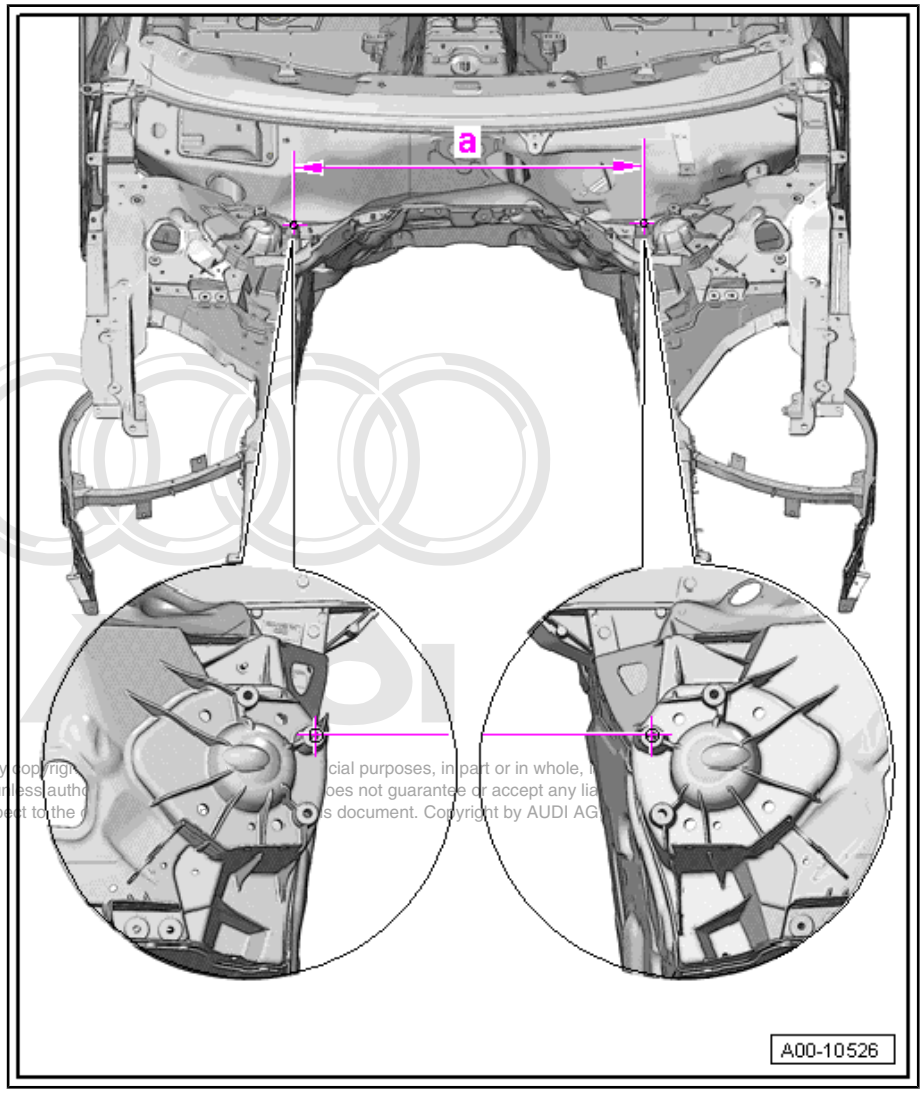

Dimension -a- = 781 mm ± 2.0 mm

Suspension strut mounting - diagonal distance

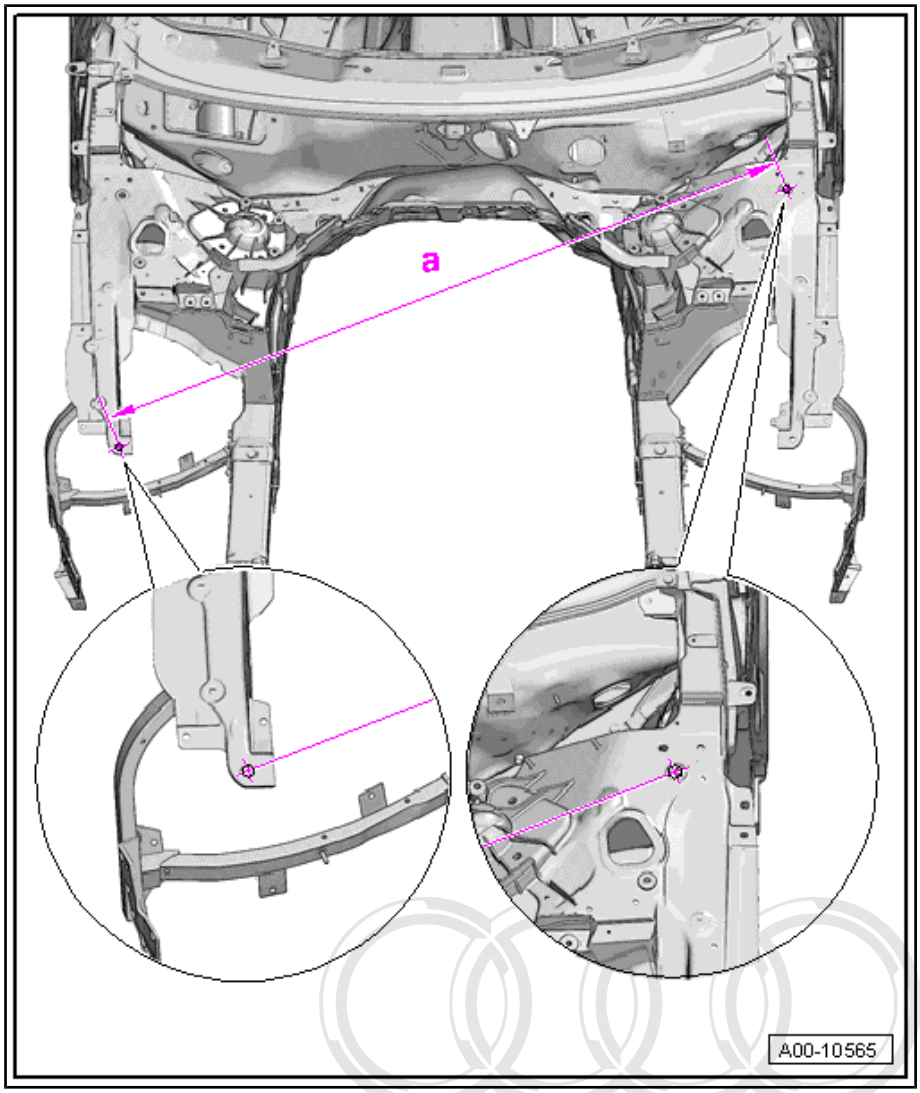

Dimension -a- = 1607 mm ± 2.0 mm

17.2 Body - centre

Distance between A-pillars

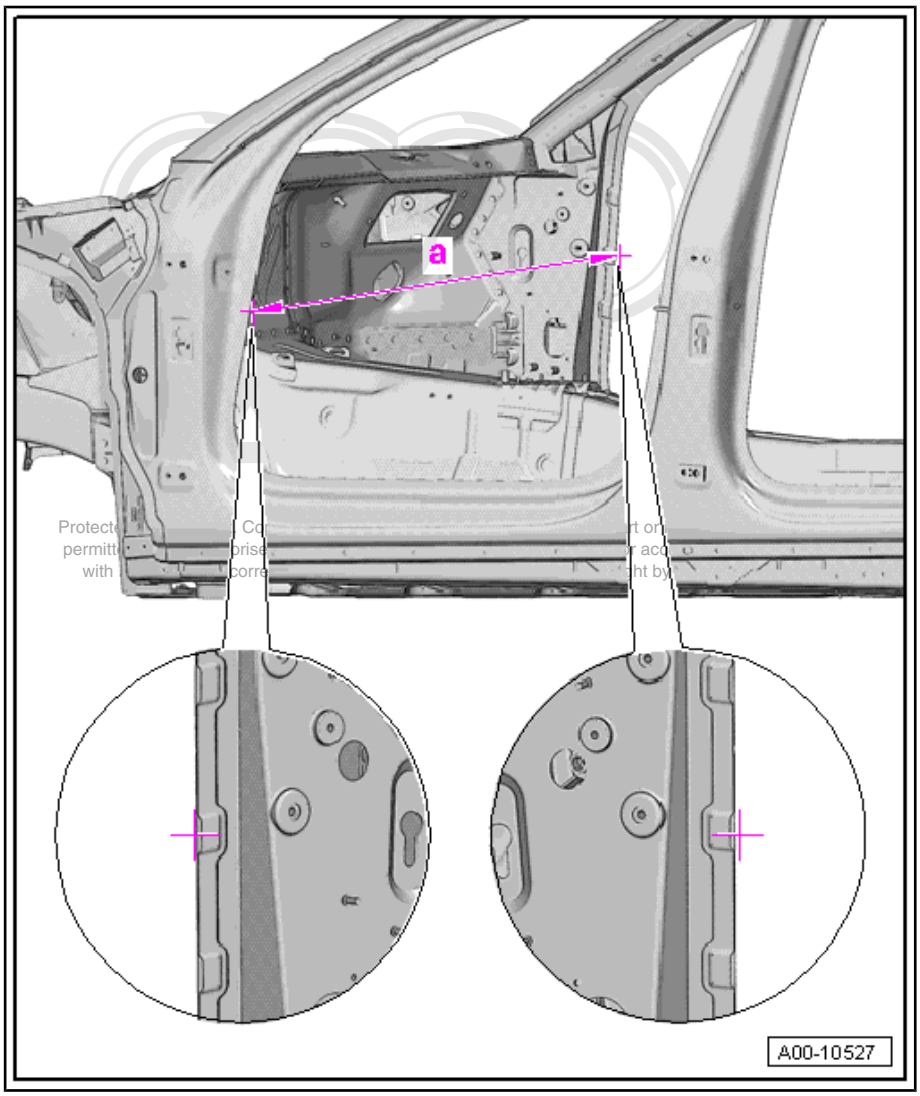

Dimension -a- = 1549 mm ± 2.0 mm

Front door opening

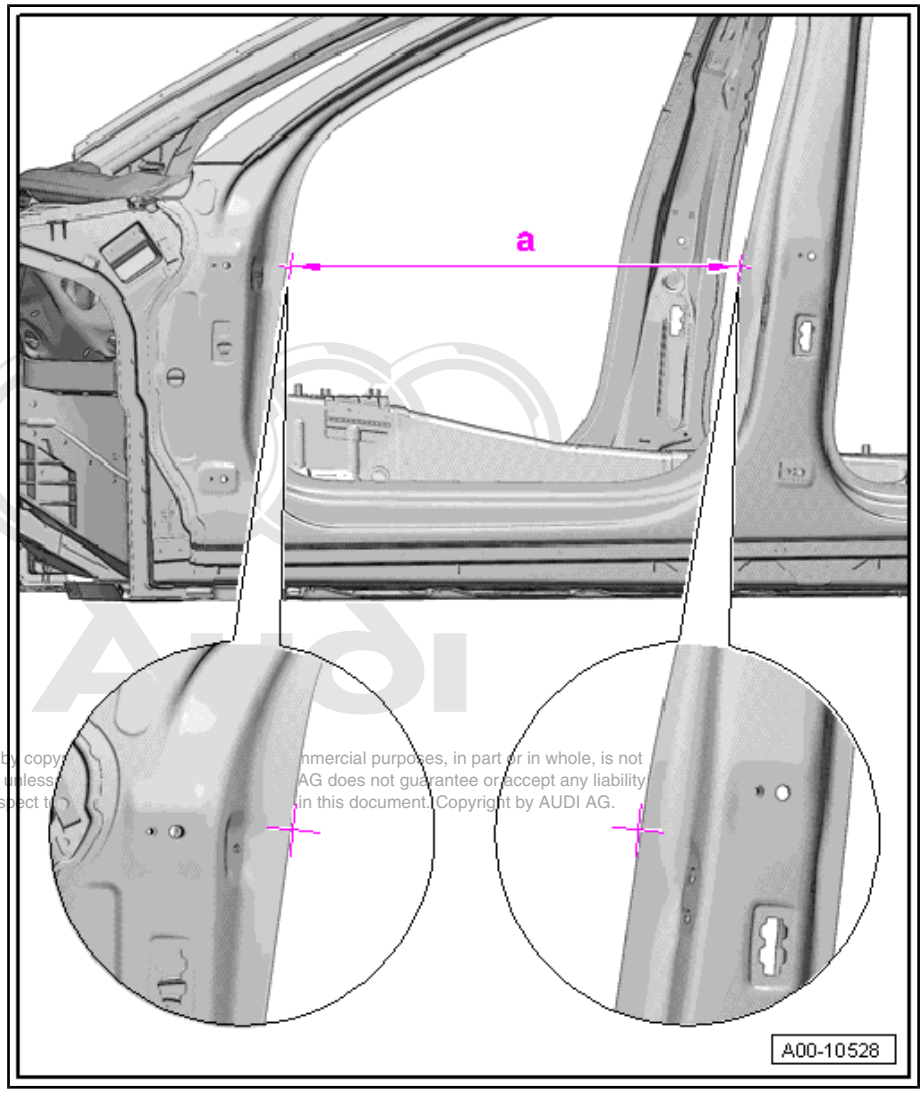

Dimension -a- = 874 mm ± 2.0 mm

Distance between B-pillars

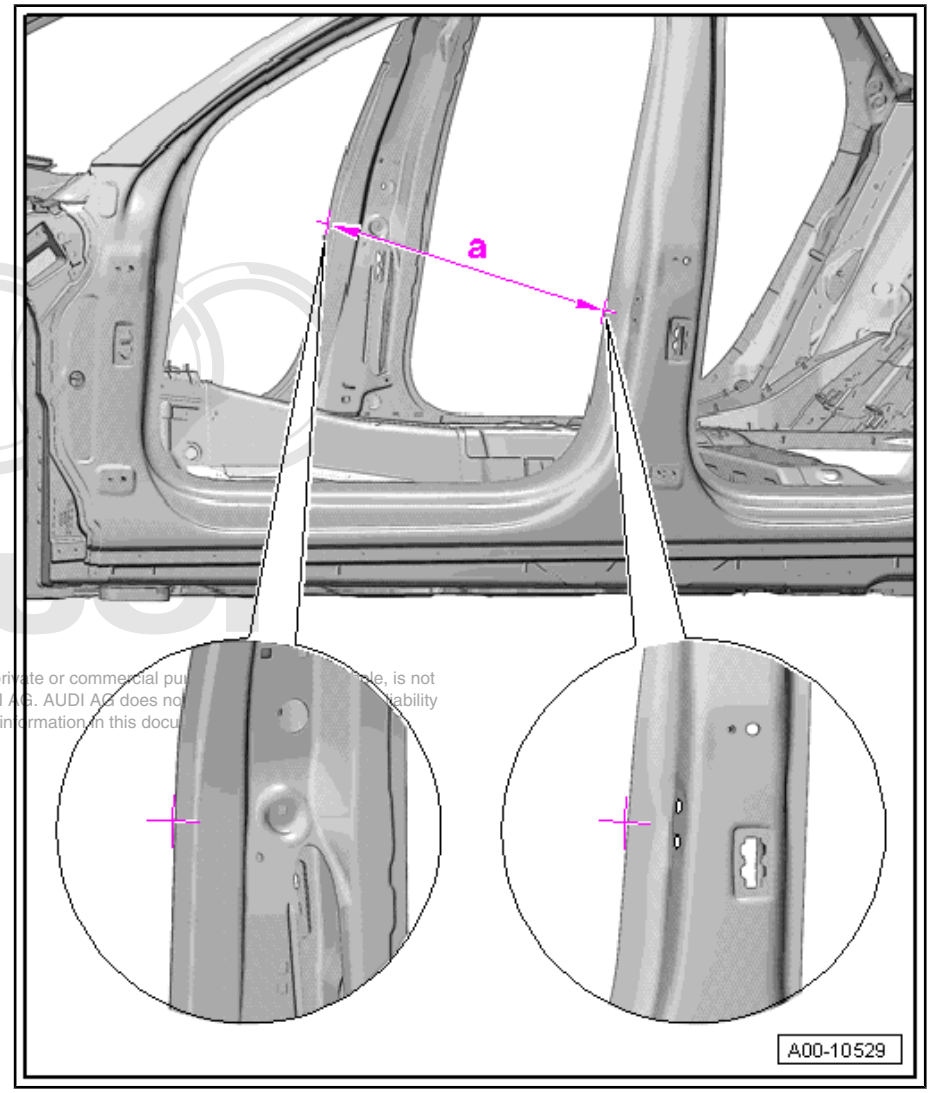

Dimension -a- = 1500 mm ± 2.0 mm

Distance between C-pillars

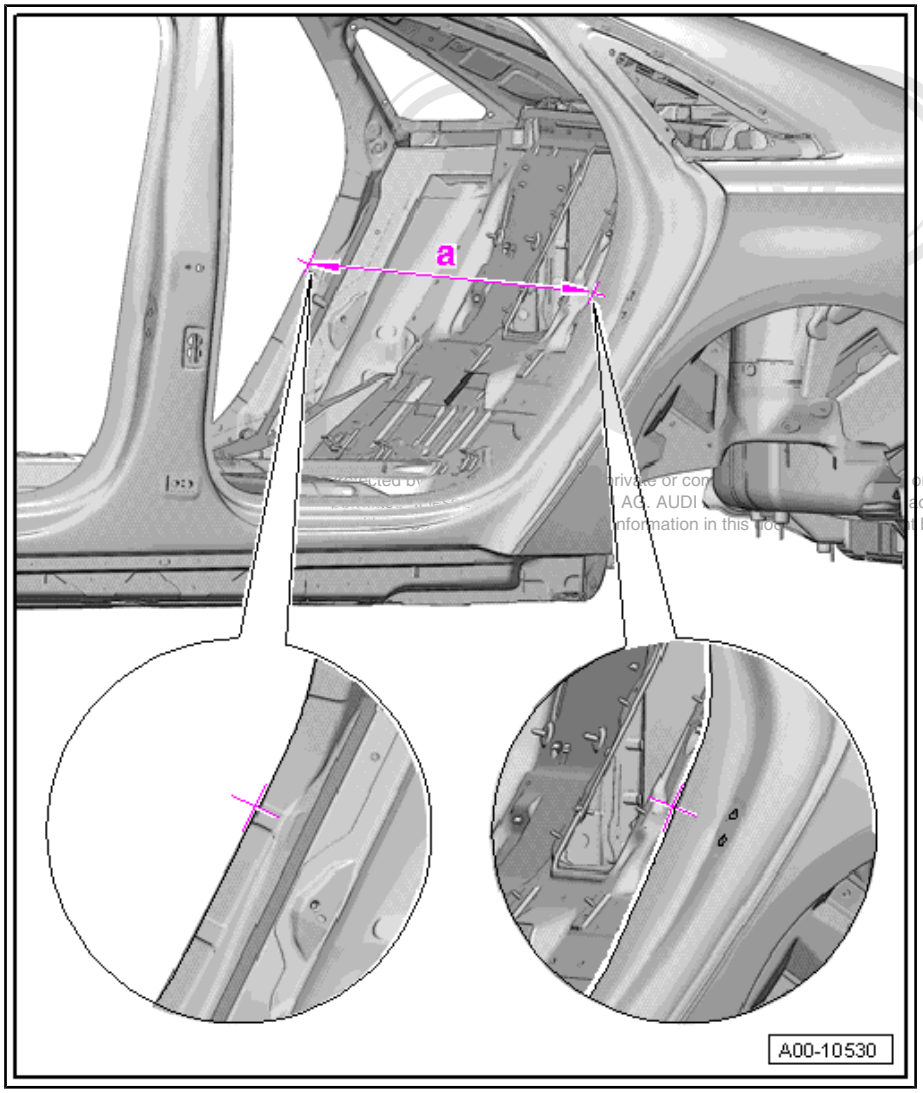

Dimension -a- = 1489 mm ± 2.0 mm

17.3 Body - rear

Rear lid opening

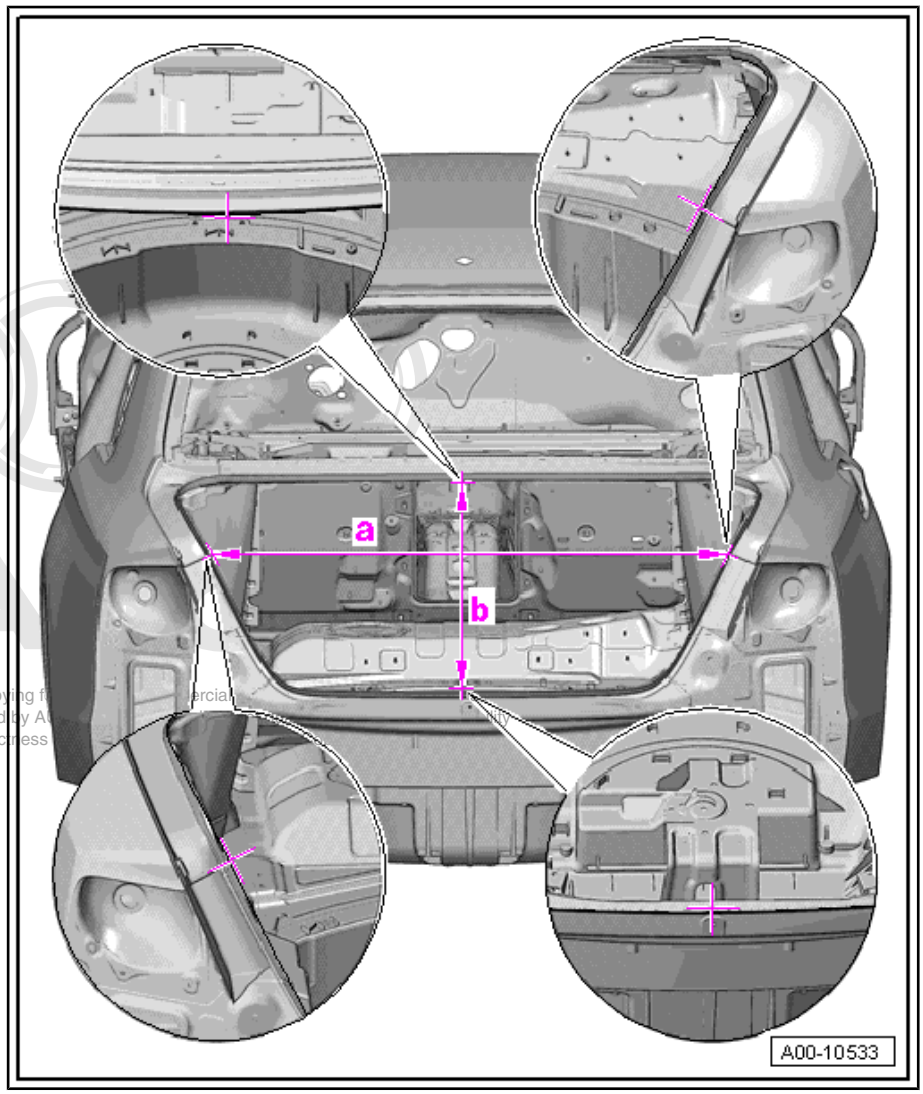

Dimension -a- = 618 mm ± 2.0 mm

Dimension -b- = 1174 mm ± 2.0 mm

Tail light mounting

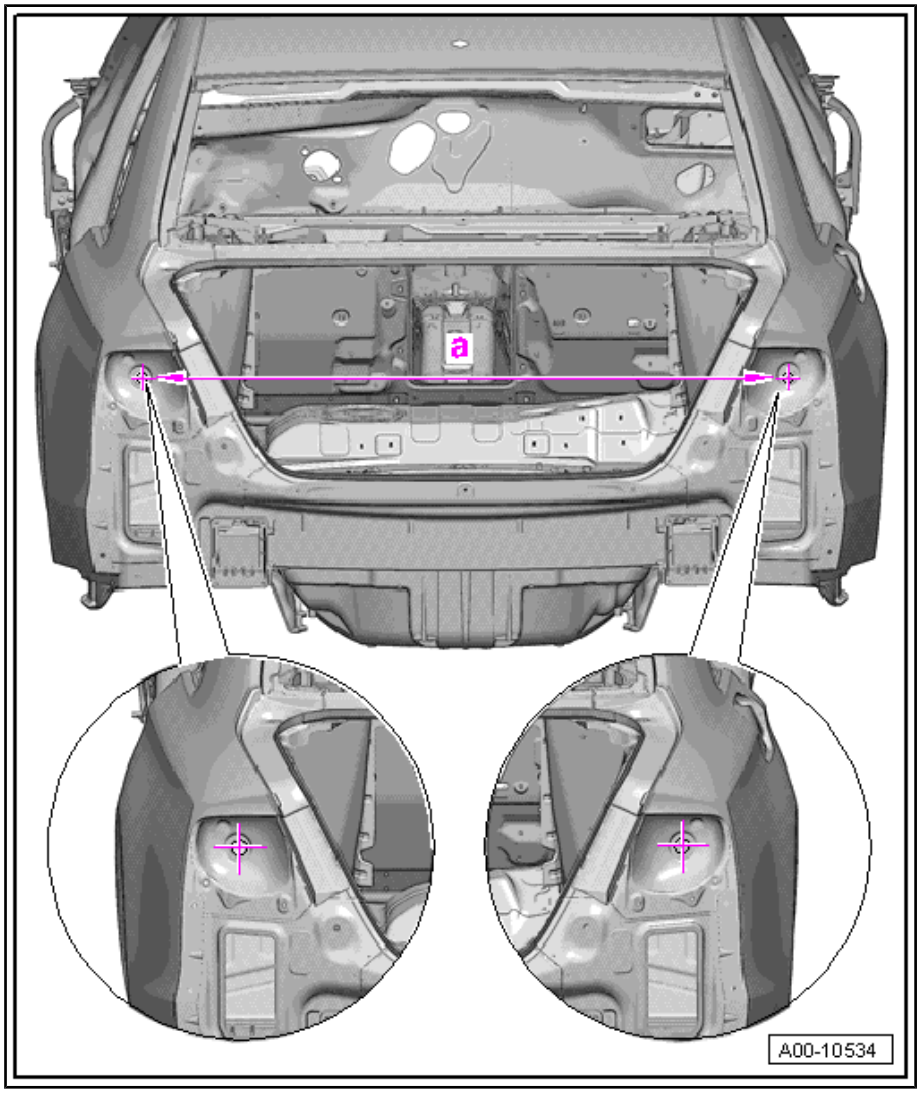

Dimension -a- = 1445 mm ± 2.0 mm

Rear longitudinal member

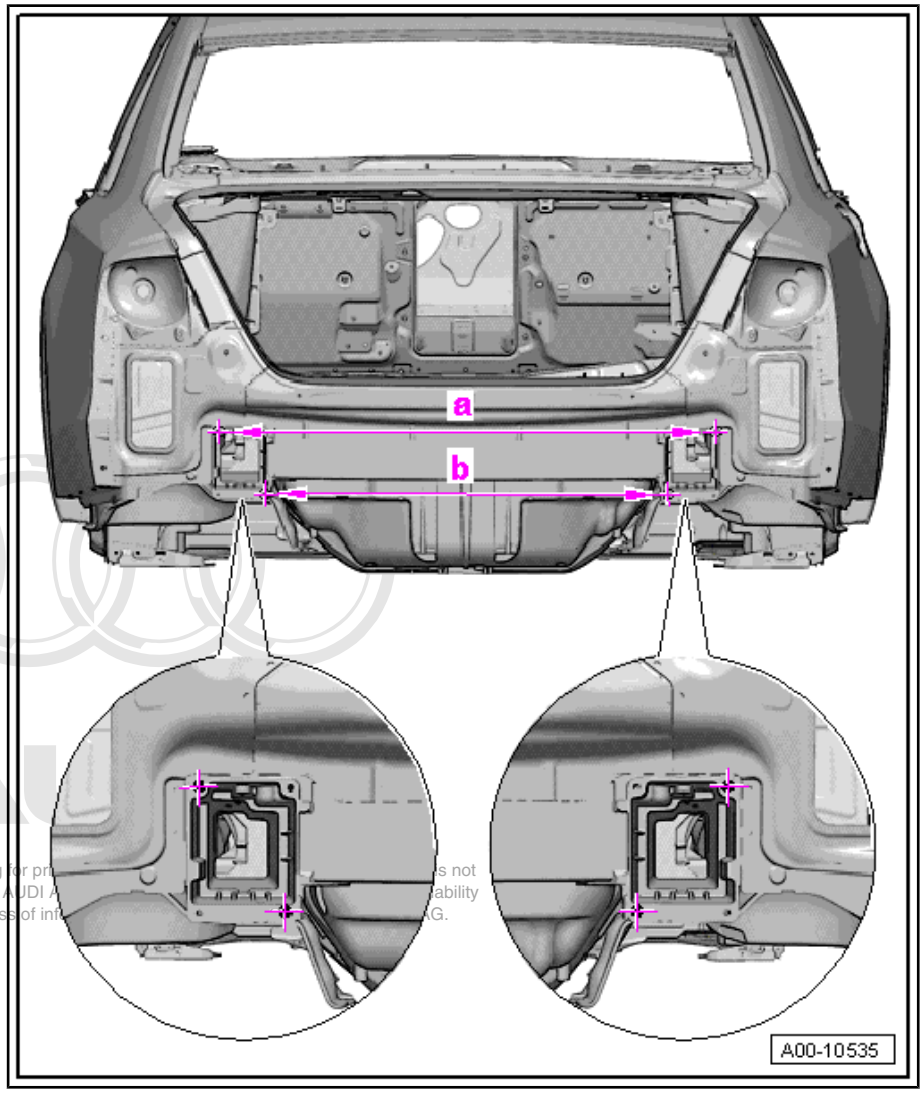

Dimension -a- = 1110 mm ± 2.0 mm

Dimension -b- = 906 mm ± 2.0 mm

17.4 Floor group, front

Front longitudinal member

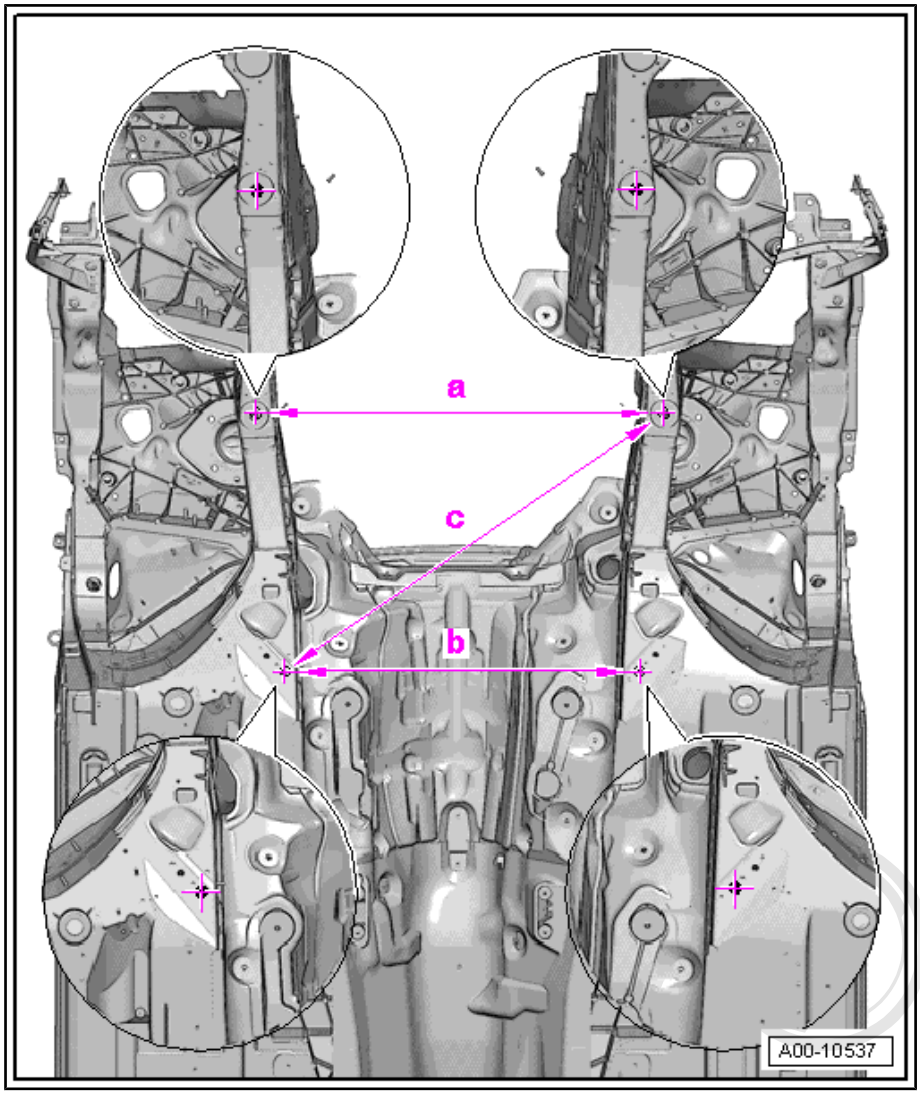

Dimension -a- = 868 mm ± 2.0 mm

Dimension -b- = 756 mm ± 2.0 mm

Dimension -c- = 984 mm ± 2.0 mm

Front engine/gearbox mounting

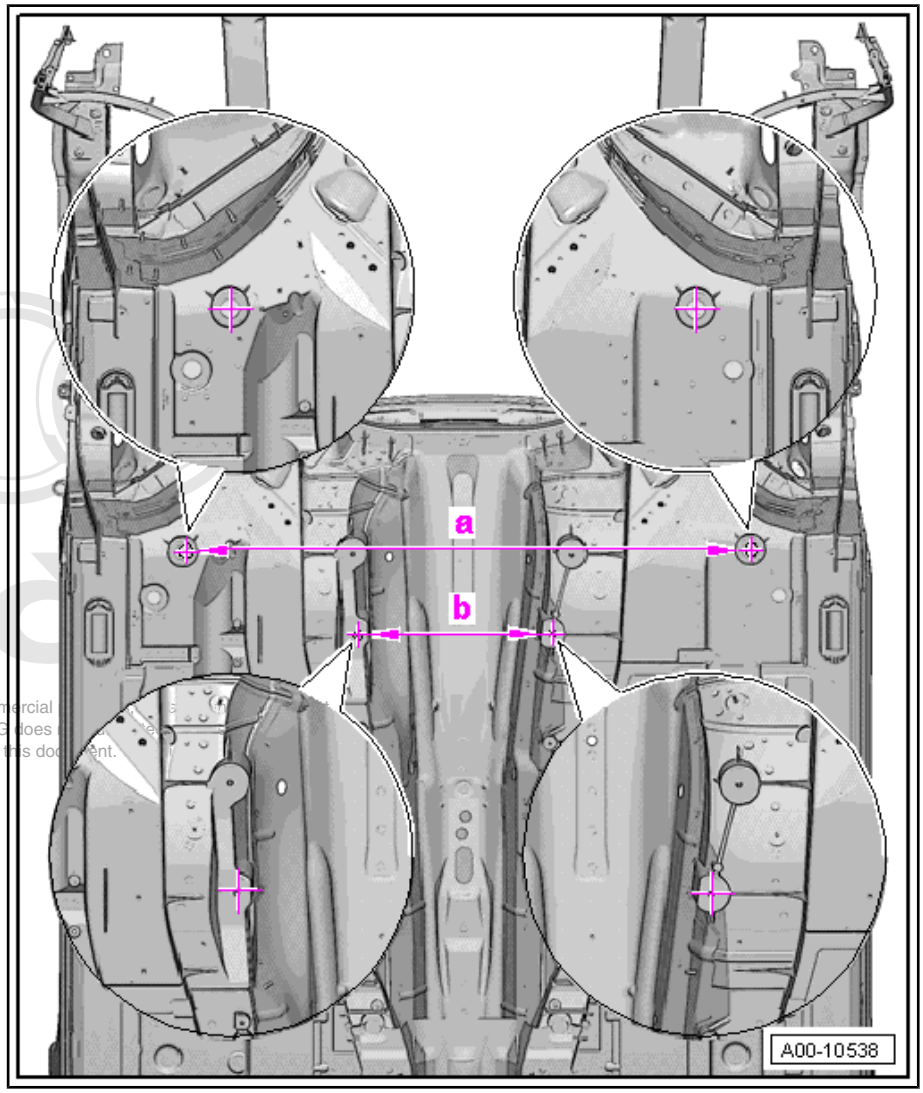

Dimension -a- = 1200 mm ± 2.0 mm

Dimension -b- = 412 mm ± 2.0 mm

17.5 Floor group, centre

Side member (at B-pillar)

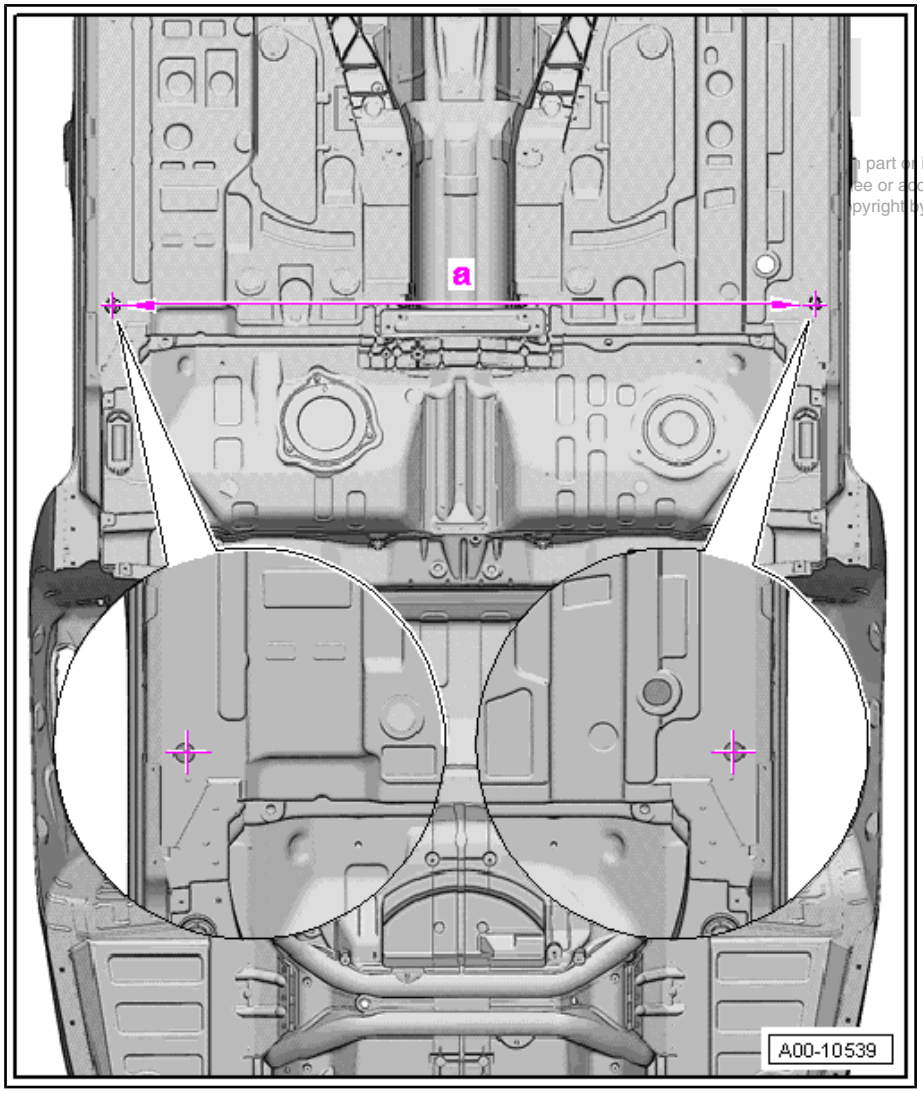

Dimension -a- = 1538 mm ± 2.0 mm

17.6 Floor group, rear

Rear axle mounting

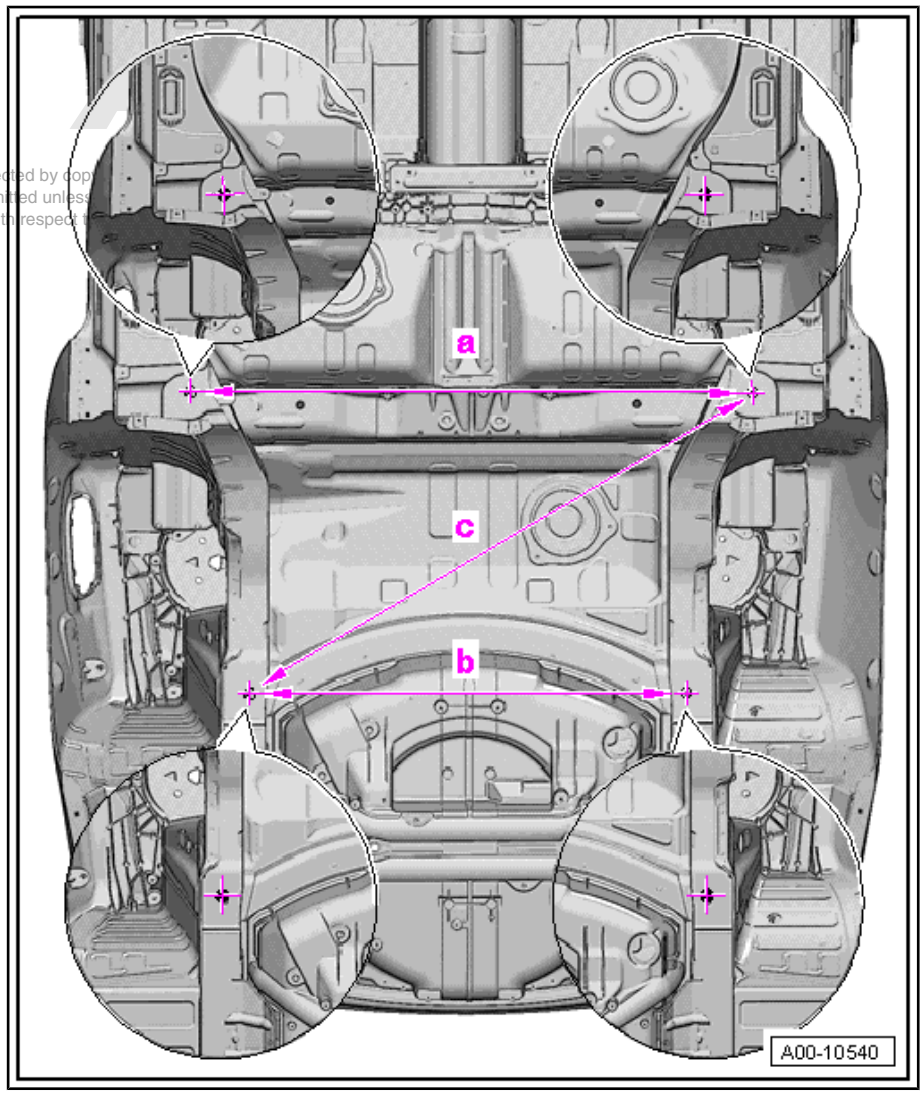

Dimension -a- = 1268 mm ± 2.0 mm

Dimension -b- = 988 mm ± 2.0 mm

Dimension -c- = 1352 mm ± 2.0 mm

Rear axle mounting

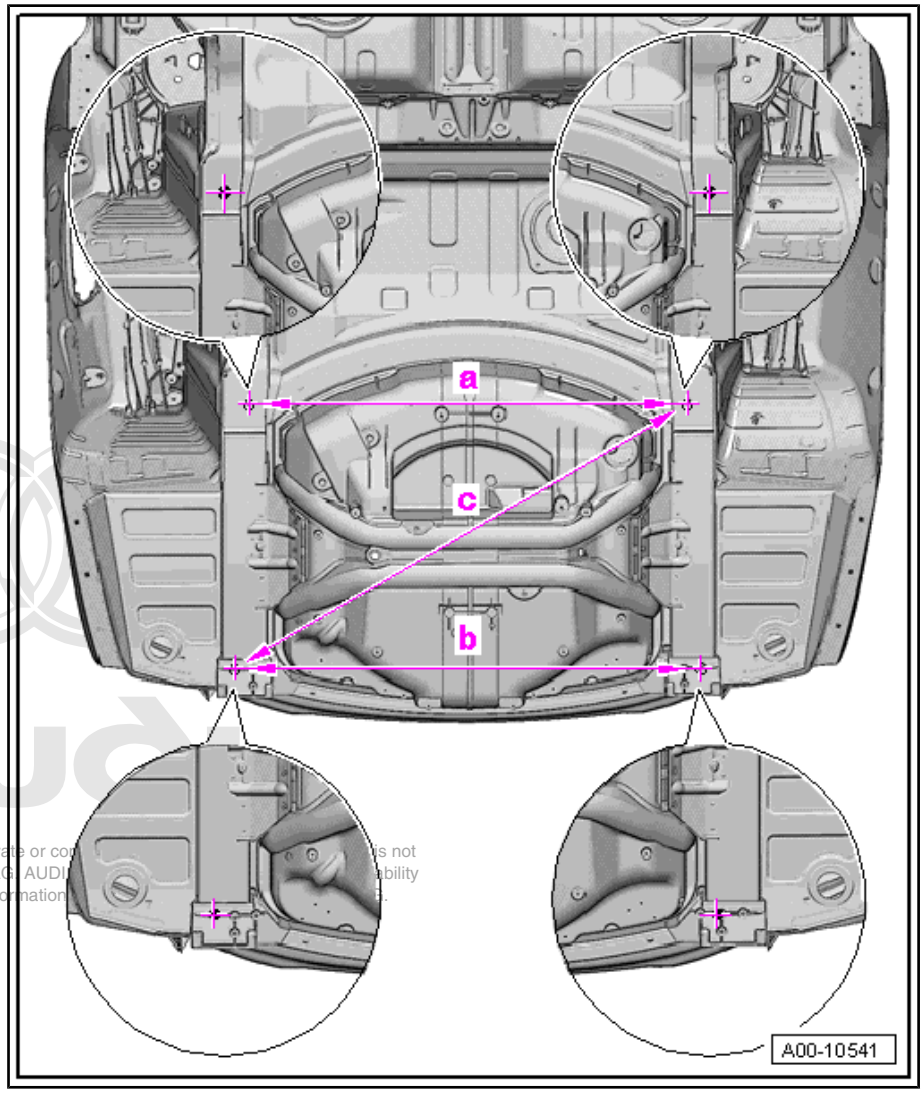

Dimension -a- = 988 mm ± 2.0 mm

Dimension -b- = 1050 mm ± 2.0 mm

Dimension -c- = 1185 mm ± 2.0 mm

18 Body panel gaps/shut lines

Note

Use the setting gauge - 3371- for setting or checking.

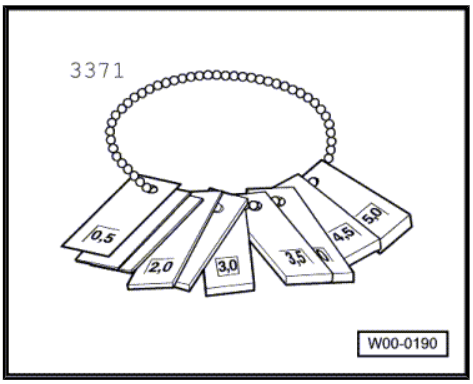

18.1 Body - front

A - 5.5 mm ± 0.5 mm
B - 4.5 mm ± 0.5 mm
C - 4.5 mm ± 0.5 mm
D - 3.0 mm ± 0.5 mm
E - 2.5 mm ± 0.5 mm
F - 3.5 mm ± 0.5 mm
G - 5.0 mm ± 0.5 mm
H - 4.5 mm ± 0.5 mm
I - 3.5 mm ± 0.5 mm

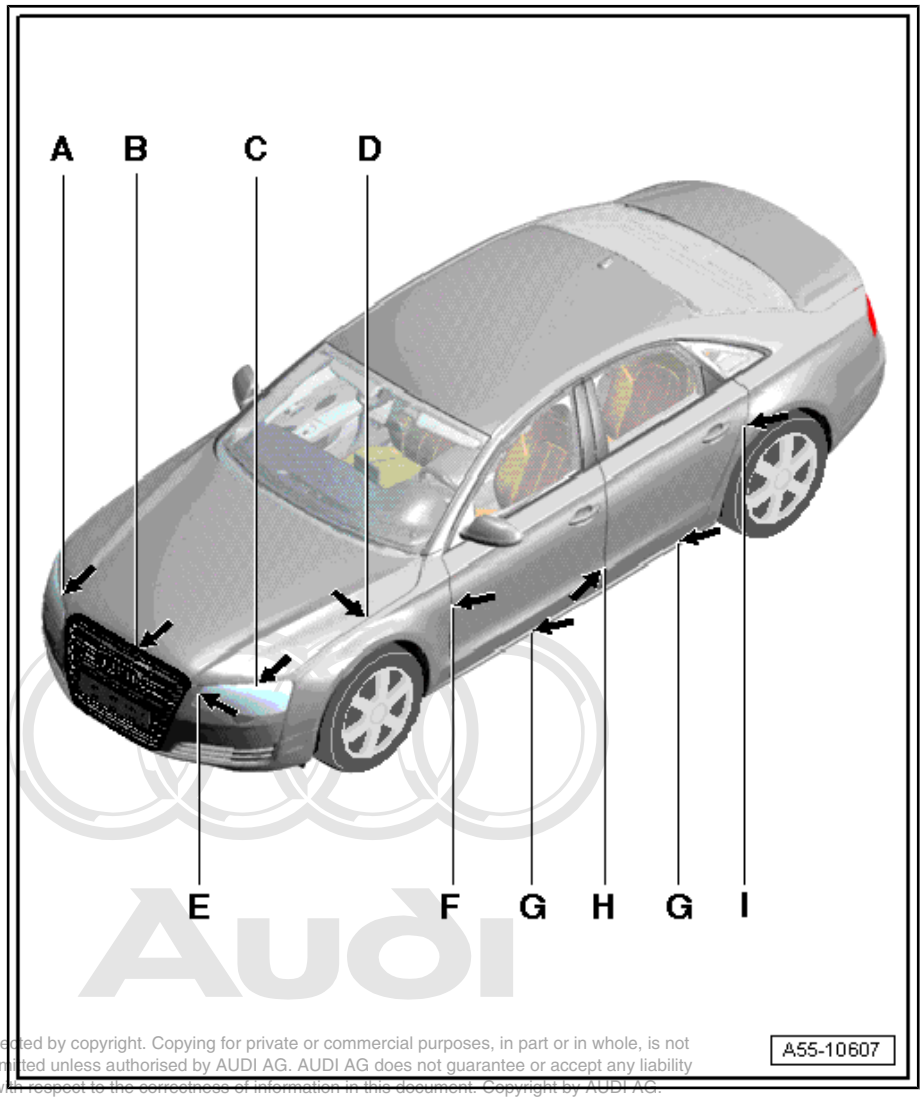

18.2 Body - rear

A - 3.5 mm ± 0.5 mm

B - 3.5 mm ± 0.5 mm

C - 2.5 mm ± 0.5 mm

D - 2.5 mm ± 0.5 mm

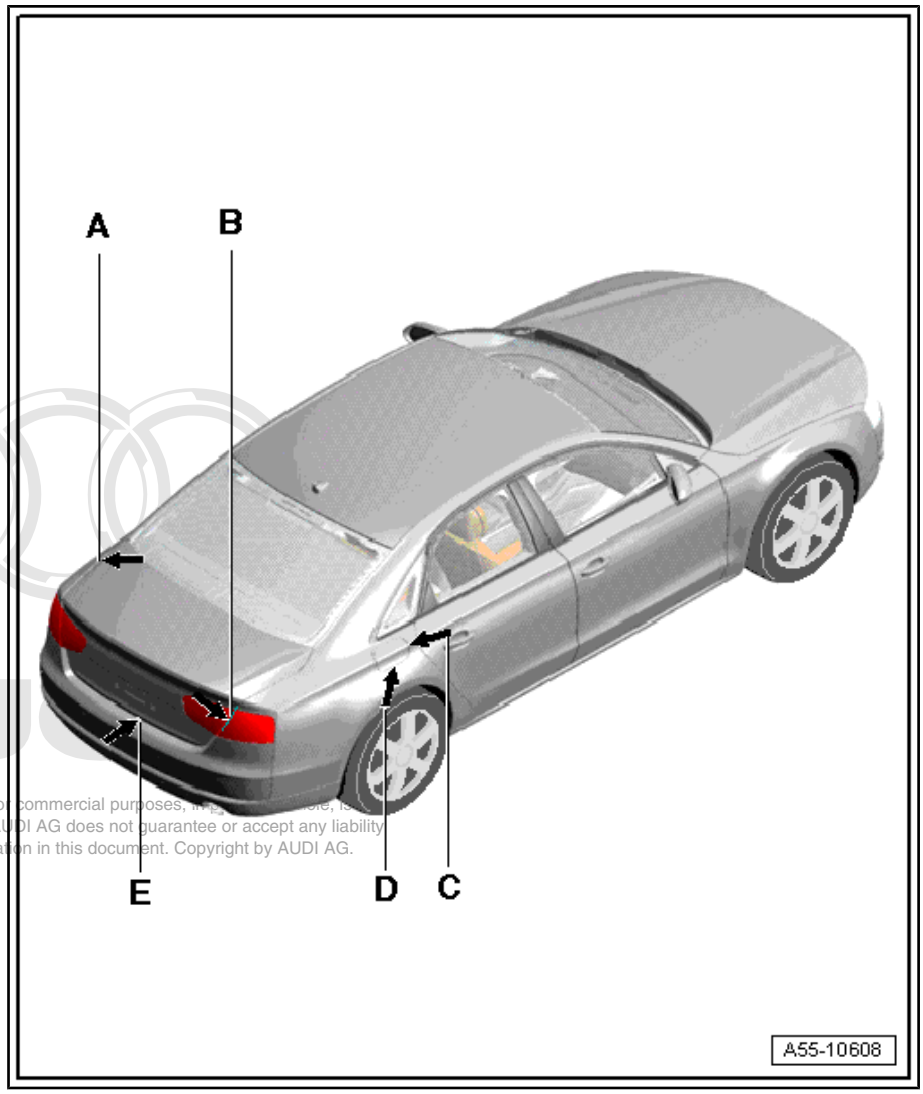

19 Tools

Special tools and workshop equipment required

- Measuring and alignment system - VAS 6526- , basic
- Measuring and alignment system - VAS 6527- , professional
- Measuring and alignment system - VAS 6528- , professional plus
- Compact angle grinder - VAS 5167-
- Pop rivet pliers - VAS 5072-
- Shielded arc welding equipment - VAS 6388-
- Drill - VAS 5144-
- Drill - VAS 6267 A-
- Compact booster - VAS 6790-
- Tensioning strap - T 10038-

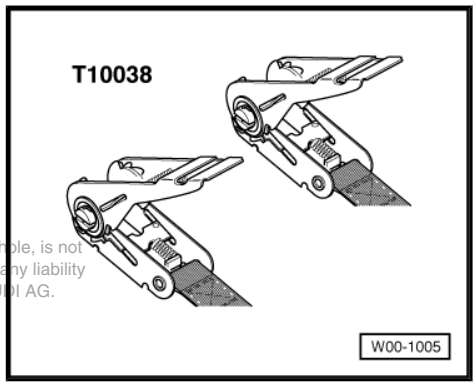

- Pneumatic cartridge gun - V.A.G 1761/1-

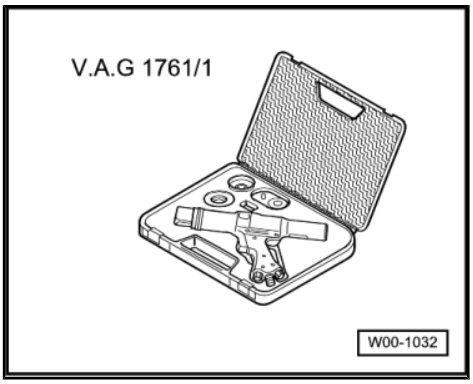

- Suction lifter - V.A.G 1344-

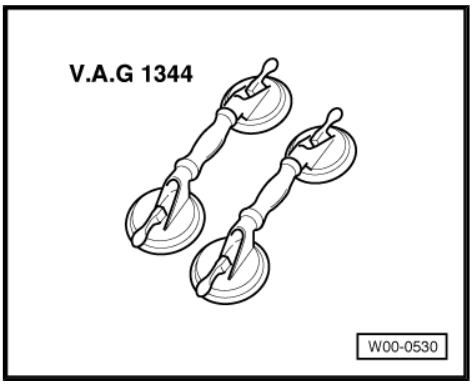

- Double cartridge gun - VAS 5237-

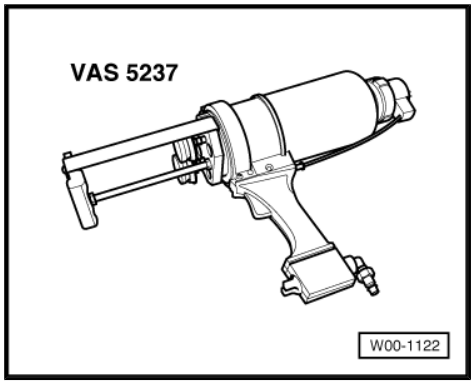

- Hand cartridge gun - VAS 5155-

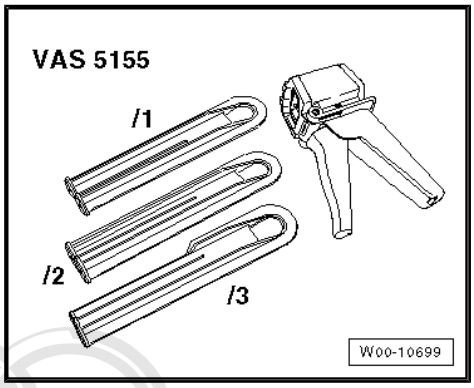

- Telescopic gauge - VAS 5160-

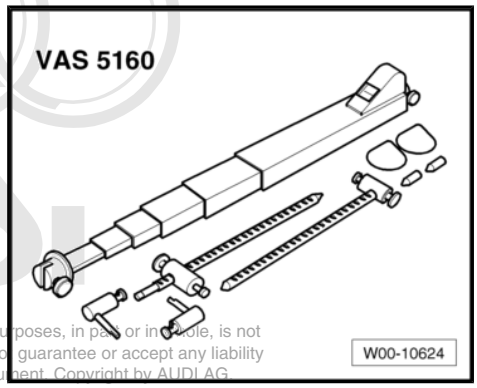

- Pneumatic glue gun - V.A.G 2005 B-

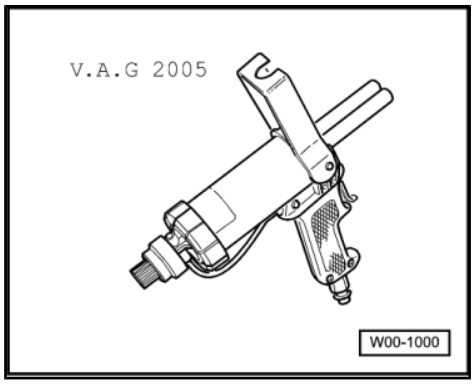

- Pneumatic jig-saw - VAS 5108 - or body saw - VAS 6598 - or -VAS 6780-

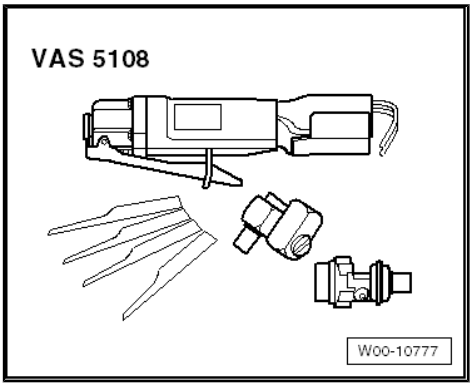

- Setting gauge - 3371-

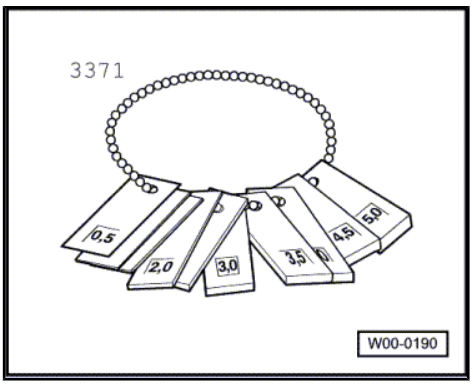

- Rechargeable riveter - VAS 5279 A-

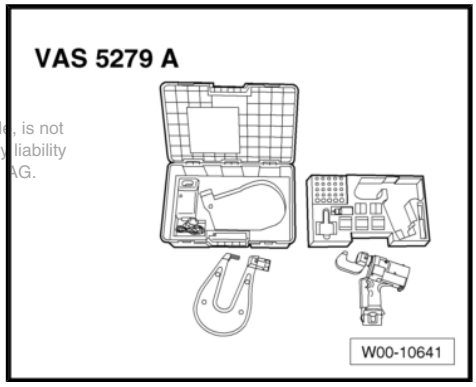

- Interchangeable head - T 40241-

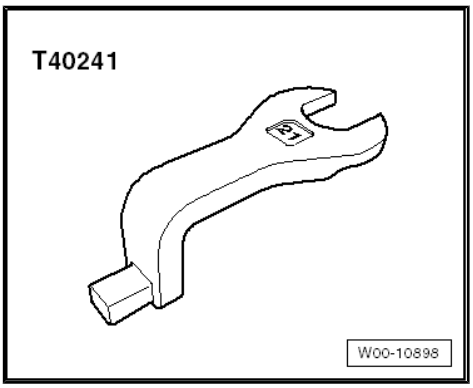

20 Straightening jig

20.1 Procedure for repairing structural body damage on Audi vehicles

- If there is reason to believe that a vehicle has suffered structural body damage, if the body dimensions do not confirm with the specifications in the Workshop Manual and/or if there is visible damage to structural components, the vehicle must be mounted on an Audi-approved straightening jig system in order to check the body dimensions.

Definition of structural body damage:

Damage (denting, buckling, rupture, etc.) to and/or displacement of a structural component of the vehicle body.

All body components with the exception of outer skin panels or bolt-on parts must be regarded as structural components.

Notwithstanding the above, the bolt-on longitudinal members of an aluminium vehicle are also structural components.

If the body dimensions differ from the specifications, the vehicle must be repaired according to the instructions in the Workshop Manual.

Alignment bracket set: alignment bracket set for Audi A8, 2010> - VAS 6624-

Note

Detailed information on setting up the alignment bracket set can be found with the equipment.

Note

- *The item numbers in the illustrations are identical with the end numbers on the alignment bracket mountings.*
- *The item numbers of the alignment bracket mountings marked with a circle are for checking the body with mechanical units installed.*
- *The required basic size is given for the alignment bracket mountings.*

50 – Body - front

RO: 50 72 55 00

1 Wing mounting flange - Renewal

1 - Wing mounting flange (upper)

2 - Wing mounting flange (lower)

3 - Inner A-pillar

4 - Suspension turret

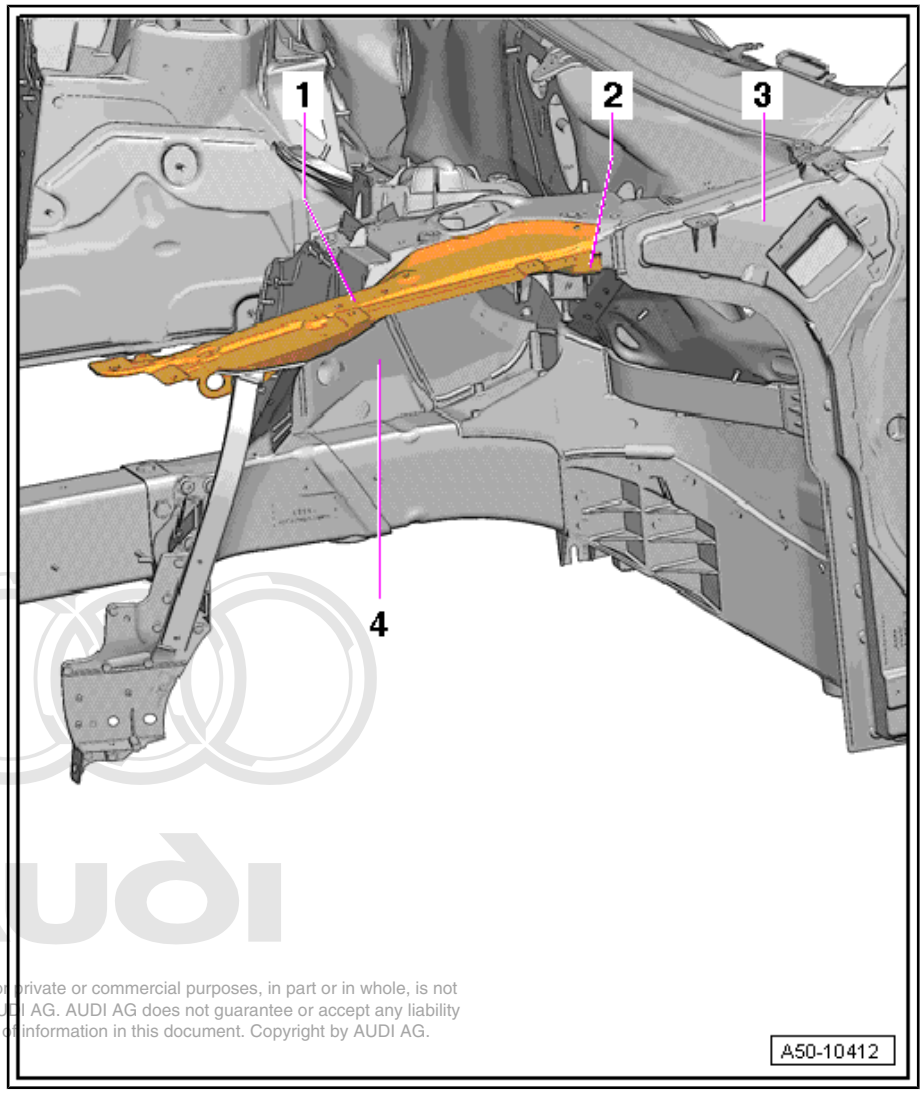

1.1 Notes for vehicles with hybrid drive

WARNING

Safety hazard: the engine can start unexpectedly.

Before carrying out general work on a vehicle with high-voltage electrical system, switch off the ignition and remove the ignition key from the vehicle.

DANGER!

When working on a vehicle with the ignition switched on or while the drive system is active, the engine can start unexpectedly and exhaust fumes can cause a health hazard in closed rooms. Moving parts can trap or draw in parts of the body and/or clothing (safety hazard).

Before switching on the ignition, perform the following steps:

- *Move selector lever to position P*
- *Activate parking brake*
- *Switch off ignition*
- *Open bonnet*
- *Connect battery charger (e.g. - VAS 5095A-) to jump-start connections of 12 V electrical system.*
- *Switch on ignition*

WARNING

Working on vehicles with high-voltage wiring:

- *Do not support yourself or tools on high-voltage wiring or associated components --> this can damage the insulation.*
- *High-voltage wiring must not be excessively bent or kinked --> this can damage the insulation.*
- *The round high-voltage connectors are colour-coded with an external coloured ring and are provided with mechanical coding or guide lugs. It is important to observe this coding when joining up the round high-voltage connectors; otherwise the connectors can be damaged.*

DANGER!

Risk of fatal injury if high-voltage components are damaged.

Observe the following when working in the vicinity of high-voltage components or wiring:

- *It is not permitted to use cutting or forming tools, other sharp-edged tools or heat sources such as welding, brazing, soldering, hot air or thermal bonding equipment.*
- *Before starting work, visually inspect the high-voltage components in the areas involved.*
- *Before working in the engine compartment, visually inspect the power and control electronics for electric drive - JX1- , electric drive motor - V141- , air conditioner compressor - V470- and high-voltage wiring.*
- *Before working on the vehicle underbody, visually inspect the high-voltage wiring and covers.*
- *Before working on the rear section of the vehicle, visually inspect the high-voltage wiring and the hybrid battery unit with the maintenance connector for high-voltage system - TW - .*
- *Visually inspect all potential equalisation lines.*

Check the following when making the visual inspection:

- *There must be no external damage on any component.*
- *The insulation of the high-voltage wiring and potential equalisation lines must not be damaged.*
- *There must be no unusual deformation of the high-voltage wiring.*
- *All high-voltage components must be identified by a red warning sticker.*

DANGER!

High voltage can cause fatal injury.

Danger of severe or fatal injuries from electric shock.

- *The high-voltage system may only be re-energised by a suitably qualified person (Audi high-voltage technician).*
- *The system may only be re-energised using the vehicle diagnostic tester via "Guided Fault Finding".*
- *The vehicle is then made ready for operation again by the qualified person (Audi high-voltage technician).*
- *The qualified person (Audi high-voltage technician) marks the vehicle by attaching the appropriate warning signs.*

DANGER!

High voltage can cause fatal injury.

Danger of severe or fatal injuries from electric shock.

- *The high-voltage system may only be de-energised by a suitably qualified person (Audi high-voltage technician).*
- *It must be definitely confirmed that the high-voltage system is de-energised. The system may only be de-energised using the vehicle diagnostic tester via "Guided Fault Finding".*
- *The qualified person (Audi high-voltage technician) confirms that the system is de-energised and ensures that it cannot be re-energised by fitting the locking cap - T40262- and by storing the ignition key and the maintenance connector for high-voltage system - TW - in a safe place.*
- *The qualified person (Audi high-voltage technician) marks the vehicle by attaching the appropriate warning signs.*

Note

Please refer to the Electronic parts catalogue when ordering replacement parts.

WARNING

Accidents can be caused if the driver is distracted by test equipment while road-testing, or if test equipment is not properly secured.

Injuries can be caused if the passenger's airbag is triggered in a collision.

- *The use of test equipment while driving causes distraction.*
- *There is an increased risk of injury if test equipment is not secured.*
- *Move the front passenger's seat back as far as it will go.*
- *Use only the vehicle diagnostic and service information system - VAS 5052- or the diagnostic system - VAS 5053- .*
- *The test equipment -1- must rest flat on the passenger's thighs (as shown in illustration) and must be operated by the passenger.*

1.2 Tools

Special tools and workshop equipment required

- Compact angle grinder - VAS 5167-
- Pop rivet pliers - VAS 5072-
- Compact booster - VAS 6790-

- Pneumatic glue gun - V.A.G 2005 B-

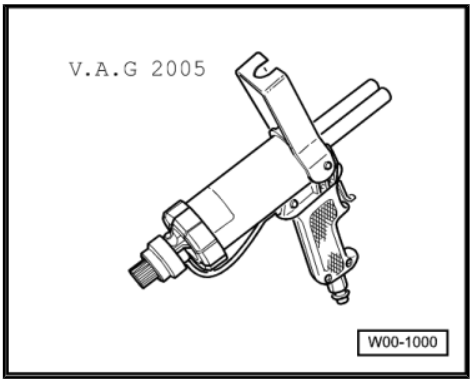

- Shielded arc welding equipment - VAS 6388-
- Pneumatic jig-saw - VAS 5108 - or body saw - VAS 6598 - or -VAS 6780-

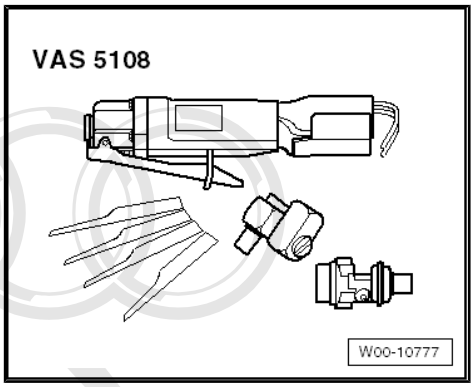

- Rechargeable riveter - VAS 5279 A-

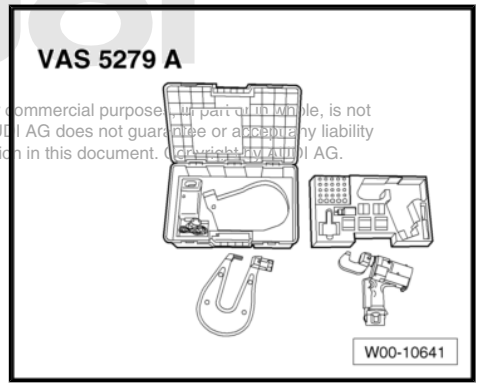

1.3 Procedure

Note

- *The Audi A8 employs flow-drill screws which can be renewed using socket for flow-drill screws - VAS 6426- or -6426/1- .*
- *Repairing joints with flow-drill screws* ⇒ page 4

Cutting locations

WARNING

Take care not to damage node castings and extruded sections when cutting.

– Separate original joint using rechargeable riveter - VAS 5279 A- or compact booster - VAS 6790- . For attachments see ⇒ page 15 .

– Roughly cut out wing mounting flange using body saw .

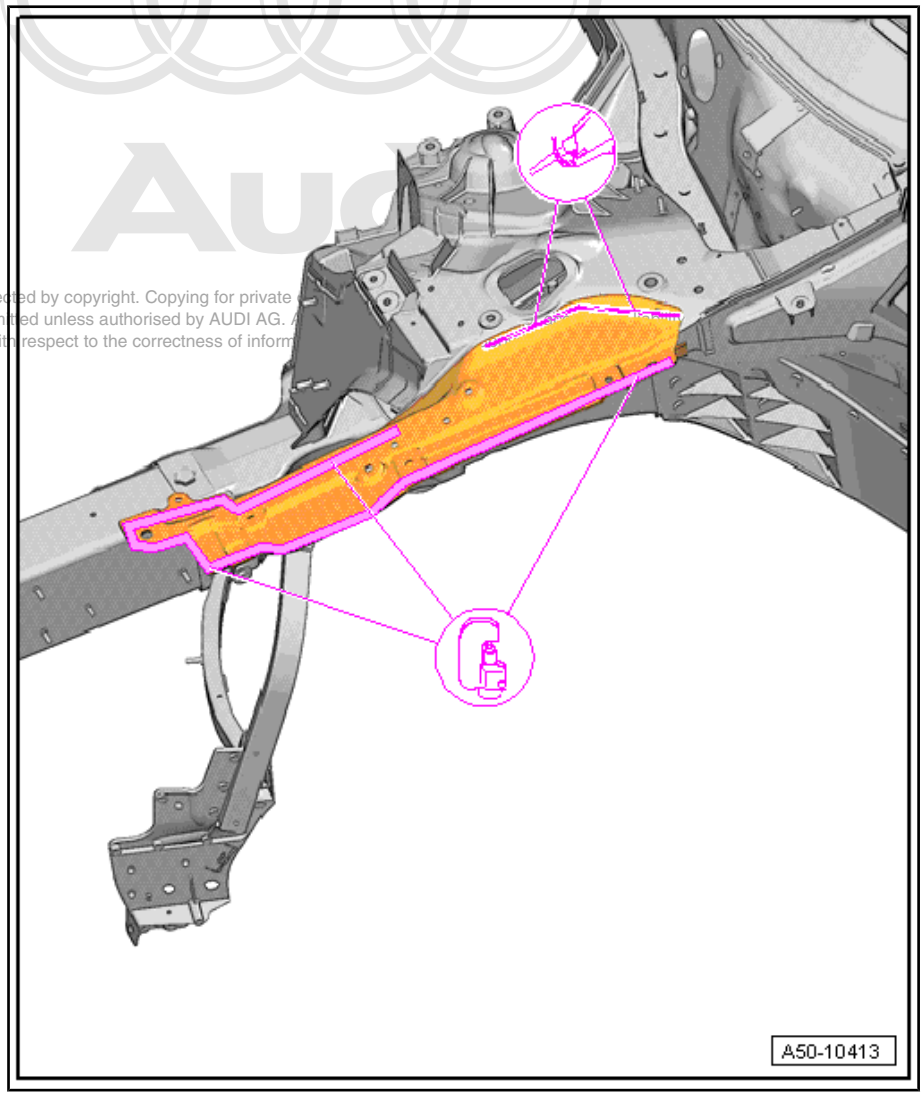

– Separate original joint at upper wing mounting flange using rechargeable riveter - VAS 5279 A- or compact booster - VAS 6790- . For attachments see ⇒ page 15 .

– Remove flow-drill screws and separate joint using socket for flow-drill screws - VAS 6426 - .

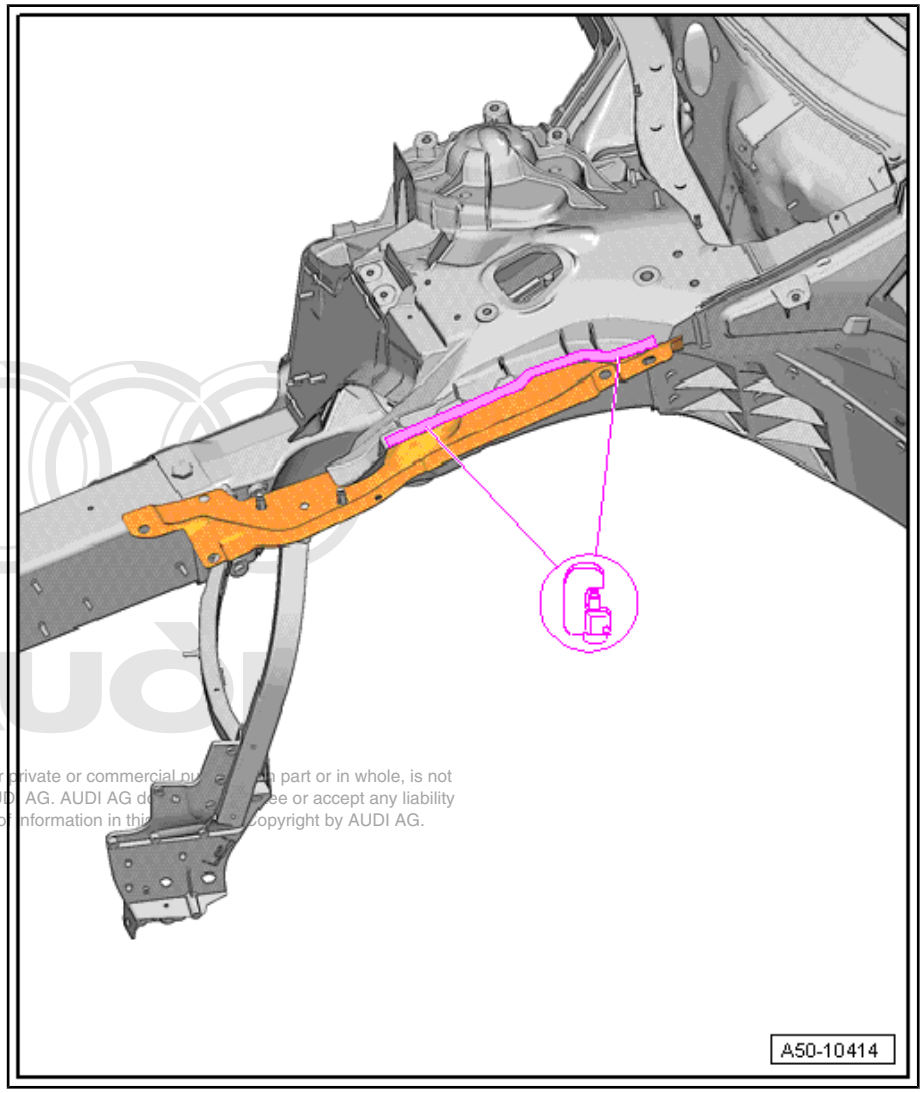

– Remove remaining material from node casting using compact angle grinder .

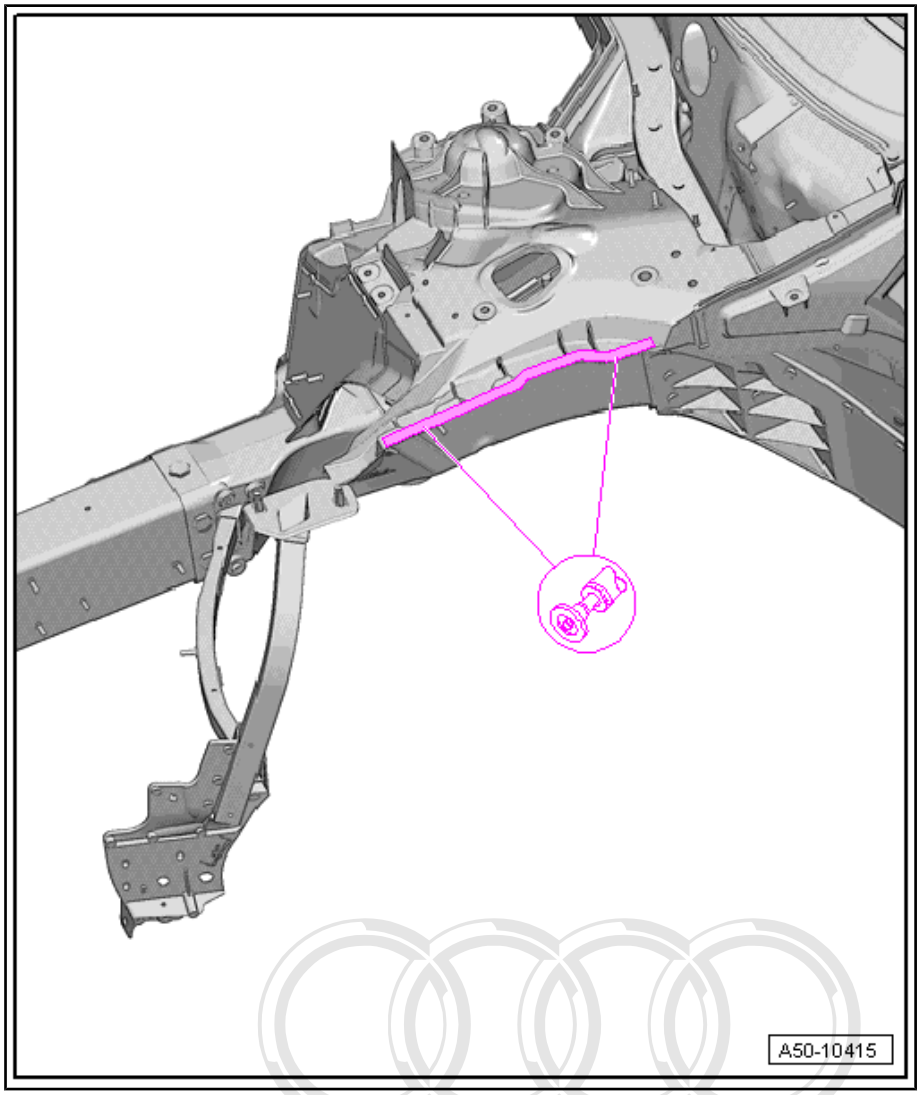

Replacement part

- Wing mounting flange (upper)
- Wing mounting flange (lower)
- Punch rivets (self-piercing rivets)

Preparing new parts

Preparing joints for adhesive application

– Prepare flanges on body and new parts for welding.

– Prepare body and wing mounting flange (top and bottom) for riveting.

– Clean bonding surfaces with cleaning solution - D 009 401 04- .

– Prepare bonding area with silicate stone - DA 009 800 - and clean.

– Apply aluminium primer - DA 009 801 - to bonding surfaces using applicator - D 009 500 25 - .

Apply 2-component epoxy adhesive - DA 001 730 A2- to entire riveting area using pneumatic glue gun - V.A.G 2005 B- .

Riveting in

– Fix new part in position with alignment bracket.

– Rivet in lower wing mounting flange at node casting on suspension strut mounting using rechargeable riveter - VAS 5279 A- or compact booster - VAS 6790 - . For attachments see ⇒ page 15 .

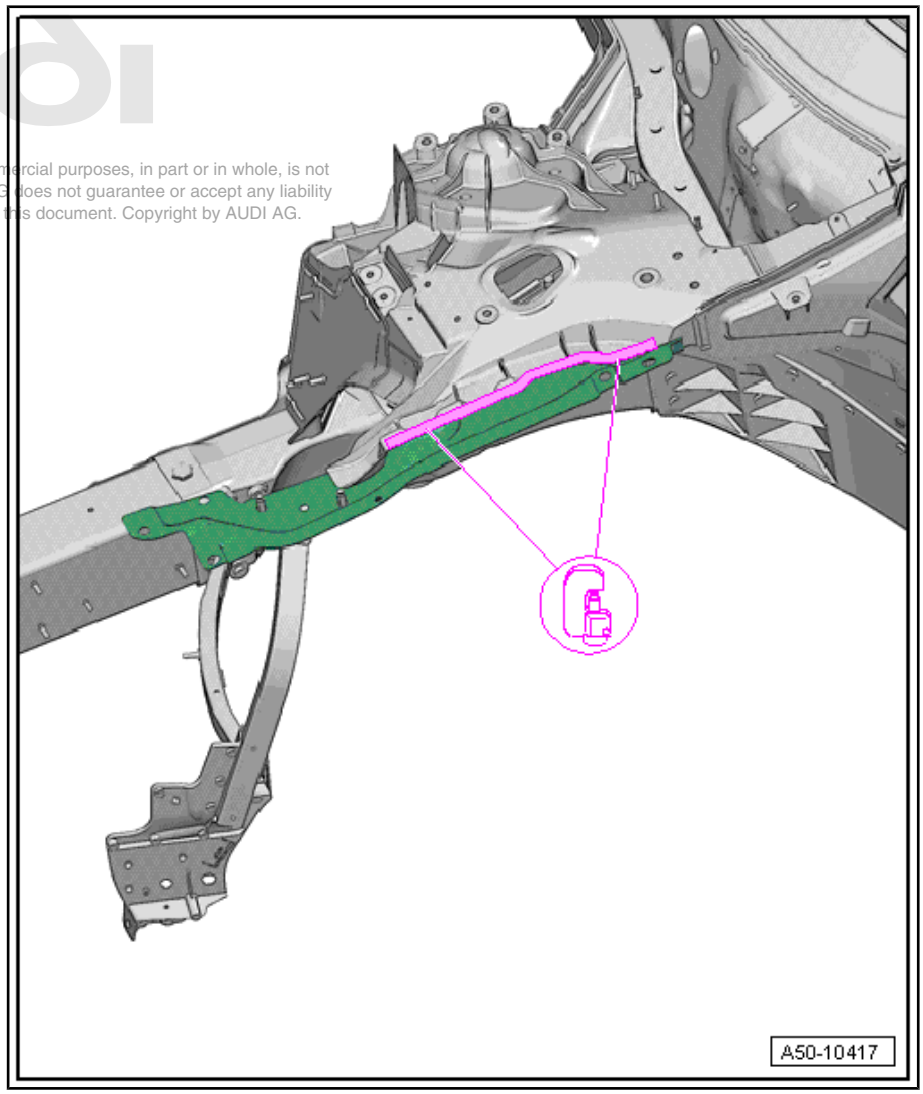

– Rivet in upper wing mounting flange at lower wing mounting flange using rechargeable riveter - VAS 5279 A- or compact booster - VAS 6790- . For attachments see ⇒ page 15 .

– Weld in new part using shielded arc welding equipment : SG continuous seam.

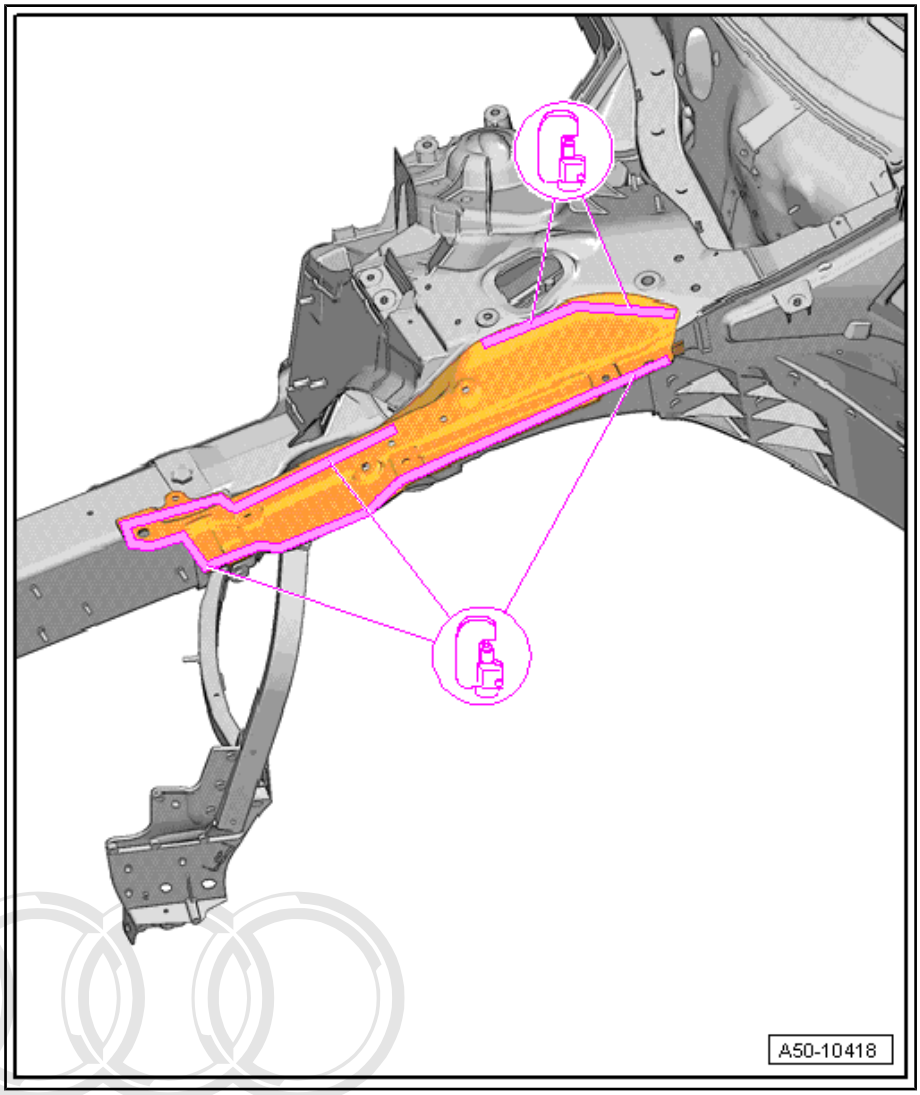

RO: 50 74 55 00

2 Suspension turret - Renewal

1 - Suspension turret
2 - Front longitudinal member
3 - Plenum chamber
4 - Inner A-pillar

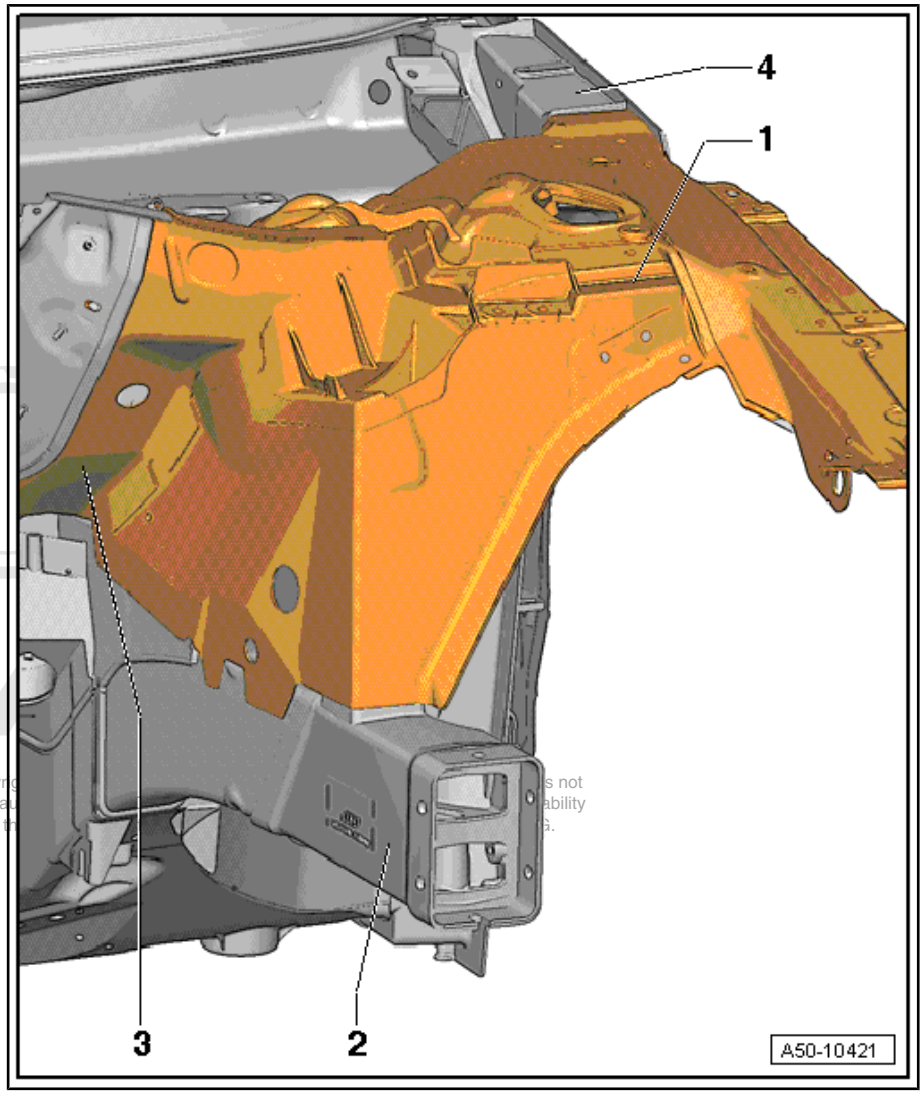

2.1 Notes for vehicles with hybrid drive

WARNING

Safety hazard: the engine can start unexpectedly.

Before carrying out general work on a vehicle with high-voltage electrical system, switch off the ignition and remove the ignition key from the vehicle.

DANGER!

When working on a vehicle with the ignition switched on or while the drive system is active, the engine can start unexpectedly and exhaust fumes can cause a health hazard in closed rooms. Moving parts can trap or draw in parts of the body and/or clothing (safety hazard).

Before switching on the ignition, perform the following steps:

- *Move selector lever to position P*
- *Activate parking brake*
- *Switch off ignition*
- *Open bonnet*
- *Connect battery charger (e.g. - VAS 5095A-) to jump-start connections of 12 V electrical system.*
- *Switch on ignition*

WARNING

Working on vehicles with high-voltage wiring:

- *Do not support yourself or tools on high-voltage wiring or associated components --> this can damage the insulation.*
- *High-voltage wiring must not be excessively bent or kinked --> this can damage the insulation.*
- *The round high-voltage connectors are colour-coded with an external coloured ring and are provided with mechanical coding or guide lugs. It is important to observe this coding when joining up the round high-voltage connectors; otherwise the connectors can be damaged.*

DANGER!

Risk of fatal injury if high-voltage components are damaged.

Observe the following when working in the vicinity of high-voltage components or wiring:

- *It is not permitted to use cutting or forming tools, other sharp-edged tools or heat sources such as welding, brazing, soldering, hot air or thermal bonding equipment.*
- *Before starting work, visually inspect the high-voltage components in the areas involved.*
- *Before working in the engine compartment, visually inspect the power and control electronics for electric drive - JX1- , electric drive motor - V141- , air conditioner compressor - V470- and high-voltage wiring.*
- *Before working on the vehicle underbody, visually inspect the high-voltage wiring and covers.*
- *Before working on the rear section of the vehicle, visually inspect the high-voltage wiring and the hybrid battery unit with the maintenance connector for high-voltage system - TW - .*
- *Visually inspect all potential equalisation lines.*

Check the following when making the visual inspection:

- *There must be no external damage on any component.*
- *The insulation of the high-voltage wiring and potential equalisation lines must not be damaged.*
- *There must be no unusual deformation of the high-voltage wiring.*
- *All high-voltage components must be identified by a red warning sticker.*

DANGER!

High voltage can cause fatal injury.

Danger of severe or fatal injuries from electric shock.

- *The high-voltage system may only be re-energised by a suitably qualified person (Audi high-voltage technician).*
- *The system may only be re-energised using the vehicle diagnostic tester via "Guided Fault Finding".*
- *The vehicle is then made ready for operation again by the qualified person (Audi high-voltage technician).*
- *The qualified person (Audi high-voltage technician) marks the vehicle by attaching the appropriate warning signs.*

DANGER!

High voltage can cause fatal injury.

Danger of severe or fatal injuries from electric shock.

- *The high-voltage system may only be de-energised by a suitably qualified person (Audi high-voltage technician).*
- *It must be definitely confirmed that the high-voltage system is de-energised. The system may only be de-energised using the vehicle diagnostic tester via "Guided Fault Finding".*
- *The qualified person (Audi high-voltage technician) confirms that the system is de-energised and ensures that it cannot be re-energised by fitting the locking cap - T40262- and by storing the ignition key and the maintenance connector for high-voltage system - TW - in a safe place.*
- *The qualified person (Audi high-voltage technician) marks the vehicle by attaching the appropriate warning signs.*

Note

Please refer to the Electronic parts catalogue when ordering replacement parts.

WARNING

Accidents can be caused if the driver is distracted by test equipment while road-testing, or if test equipment is not properly secured.

Injuries can be caused if the passenger's airbag is triggered in a collision.

- *The use of test equipment while driving causes distraction.*
- *There is an increased risk of injury if test equipment is not secured.*
- *Move the front passenger's seat back as far as it will go.*
- *Use only the vehicle diagnostic and service information system - VAS 5052- or the diagnostic system - VAS 5053- .*
- *The test equipment -1- must rest flat on the passenger's thighs (as shown in illustration) and must be operated by the passenger.*

2.2 Tools

Special tools and workshop equipment required

- Shielded arc welding equipment - VAS 6388-
- Compact angle grinder - VAS 5167-
- Pop rivet pliers - VAS 5072-
- Repair set for flow-drill screws - VAS 6631-
- Socket for flow-drill screws - VAS 6426 -
- Compact booster - VAS 6790-

- Rechargeable riveter - VAS 5279 A-

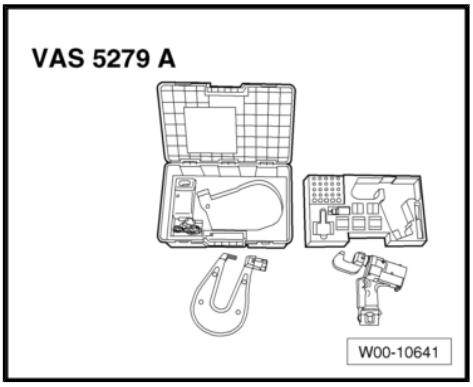

- Pneumatic jig-saw - VAS 5108 - or body saw - VAS 6598 - or -VAS 6780-

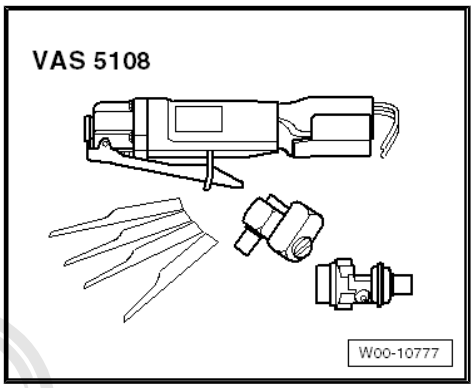

2.3 Procedure

Note

- *The Audi A8 employs flow-drill screws which can be renewed using socket for flow-drill screws - VAS 6426- or -6426/1- .*
- *Repairing joints with flow-drill screws* ⇒ page 4

WARNING

Take care not to damage node castings and extruded sections when cutting.

– Remove flow-drill screws and separate joint using socket for flow-drill screws - VAS 6426 - .

– Separate original joint using rechargeable riveter - VAS 5279 A- or compact booster - VAS 6790- . For attachments see ⇒ page 15 .

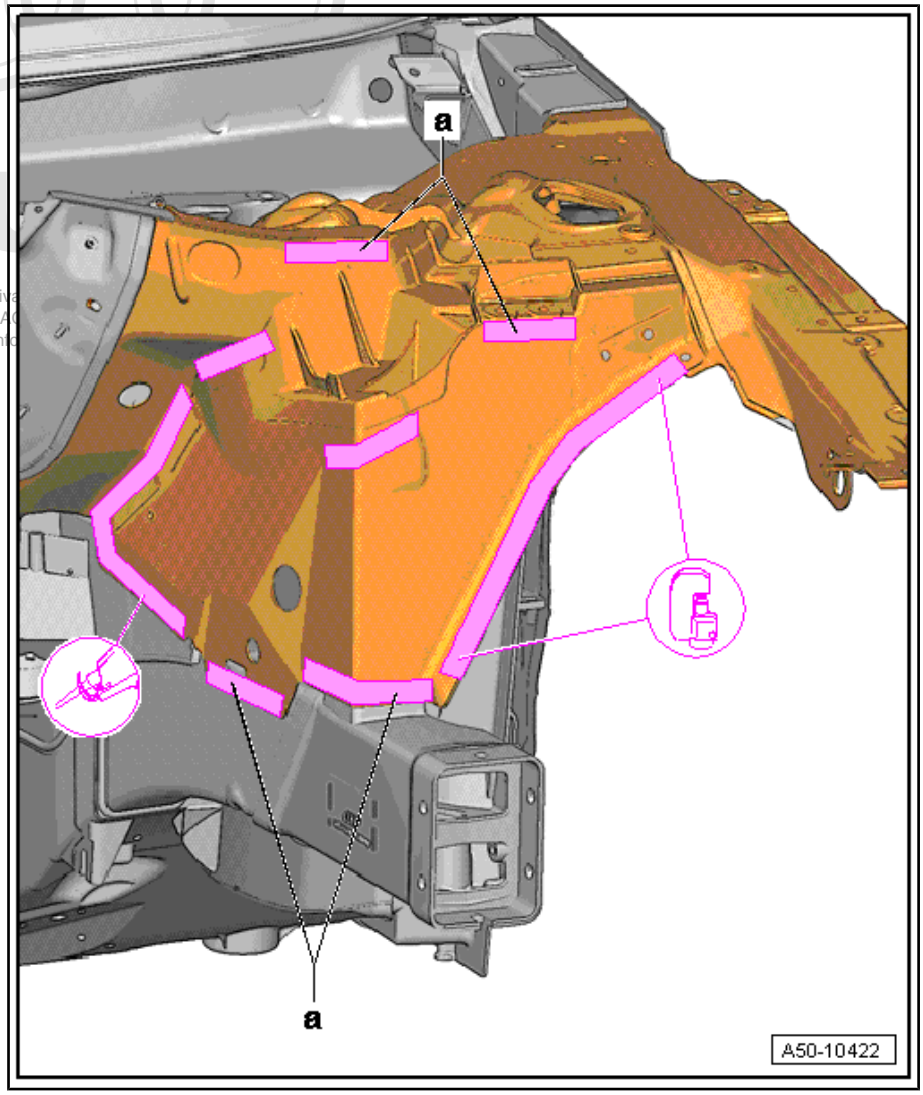

– Make separating cut in support for suspension strut mounting as shown using body saw .

– Remove flow-drill screws using socket for flow-drill screws - VAS 6426 - and separate joint -a-.

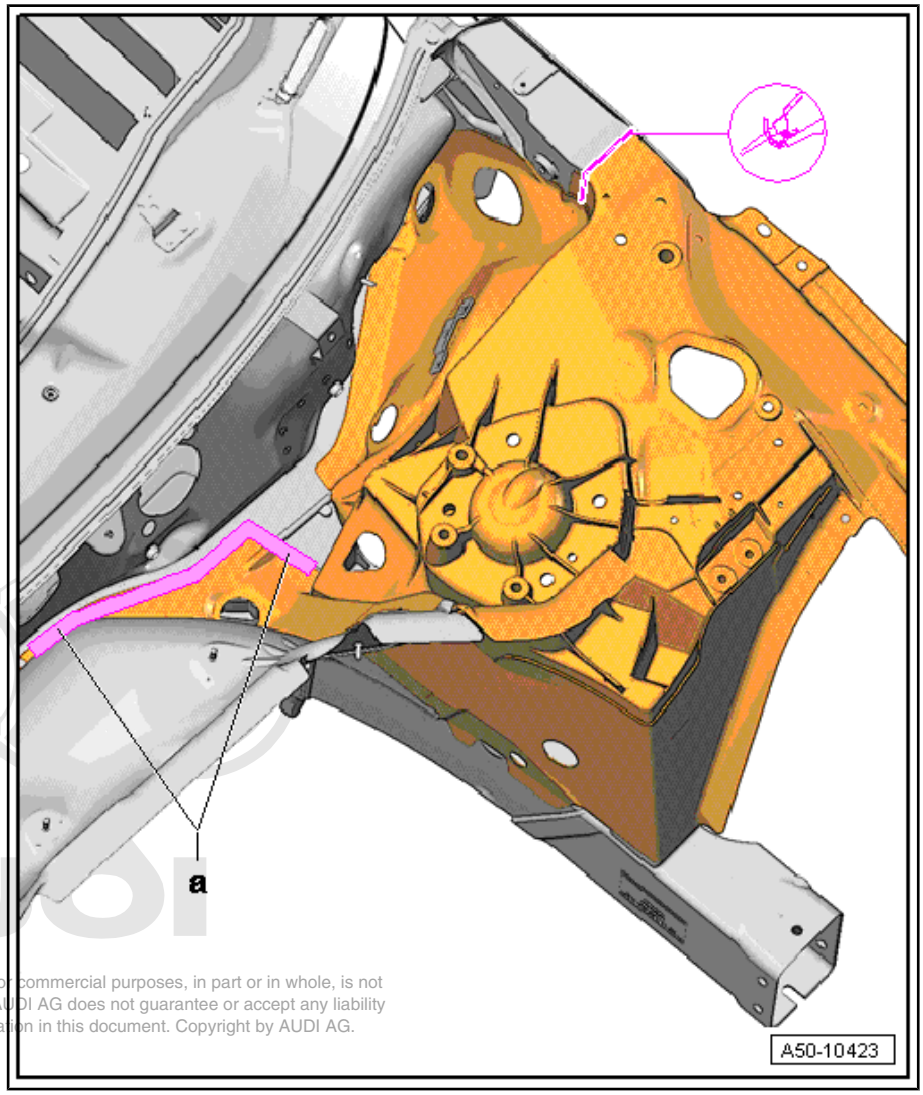

– Make separating cut at front wheel housing as shown using body saw .

– Remove flow-drill screws using socket for flow-drill screws - VAS 6426 - and separate joint -a-.

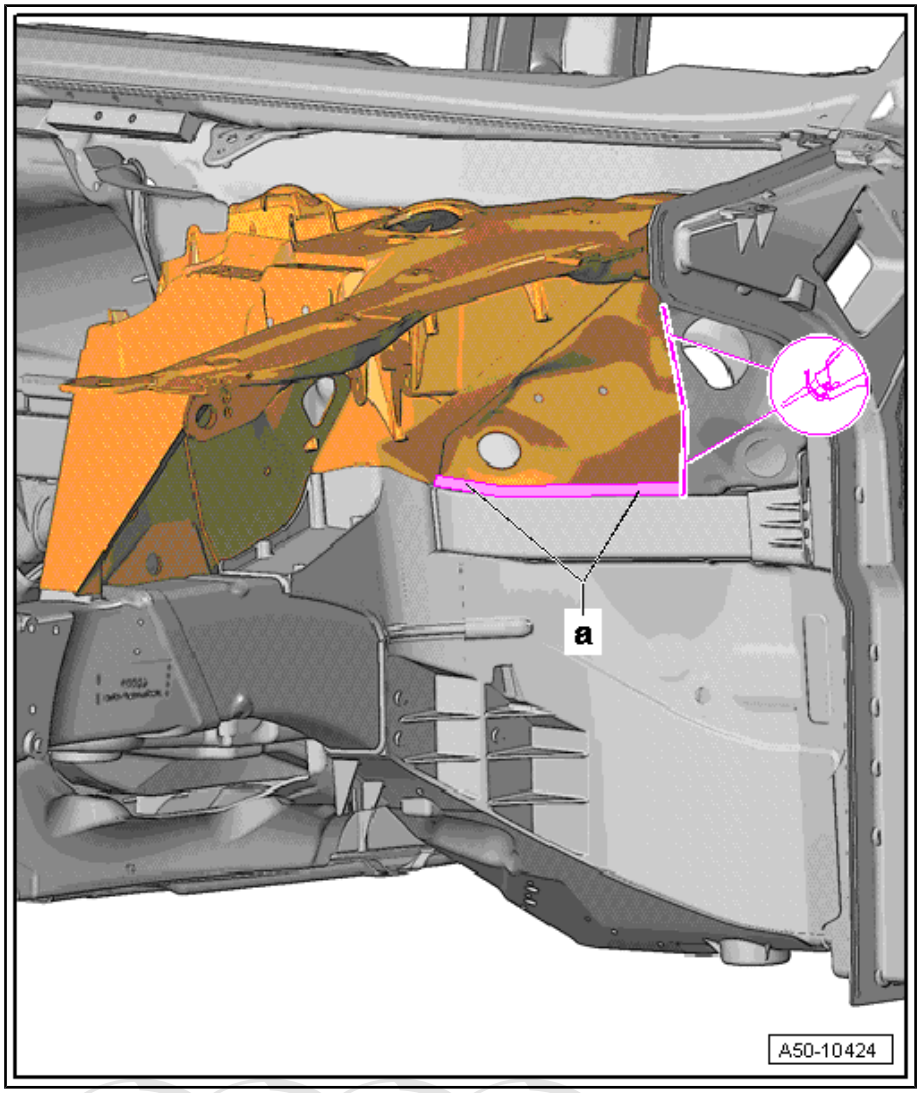

– Remove remaining material from node casting using compact angle grinder .

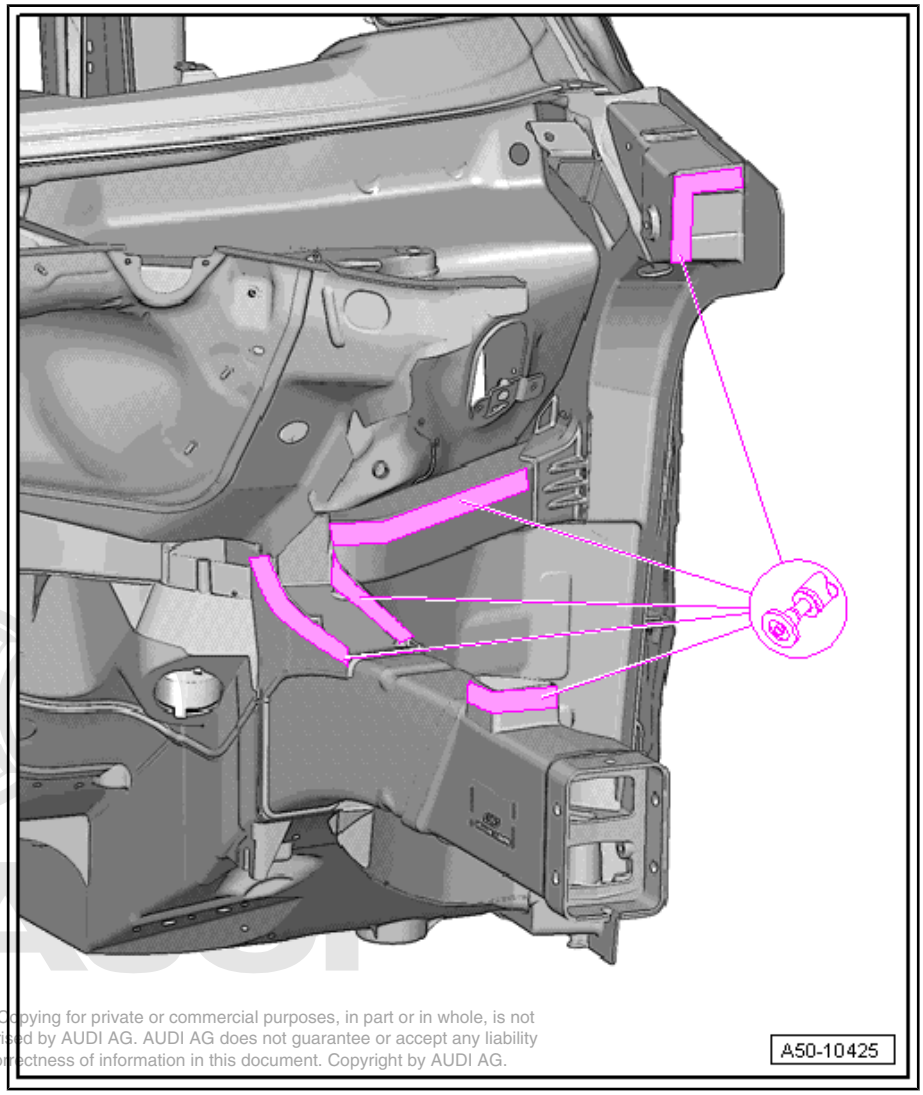

Replacement part

- Suspension turret
- Front wheel housing
- Punch rivet

Preparing new part

– Screw hole markers - VAS 6631- into cross member -a-.

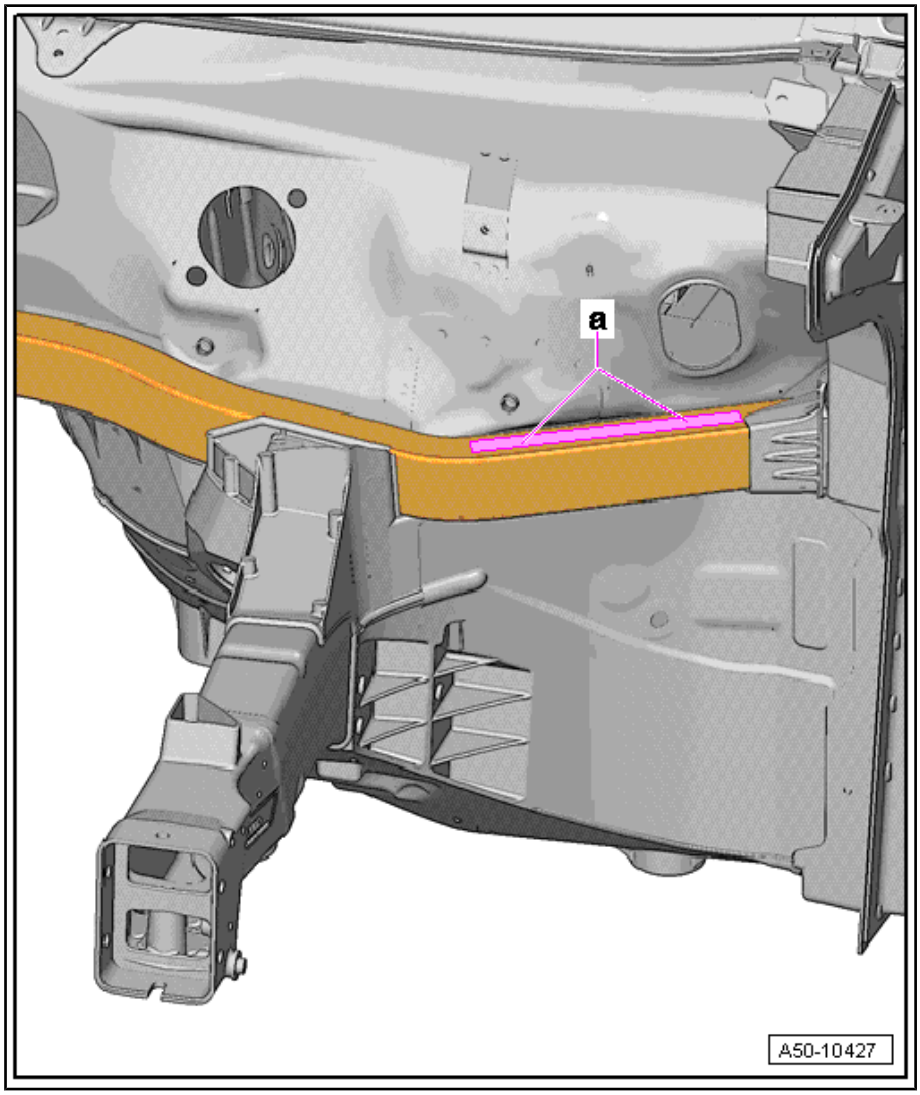

– Weld suspension turret to longitudinal member using shielded arc welding equipment : SG continuous seam.

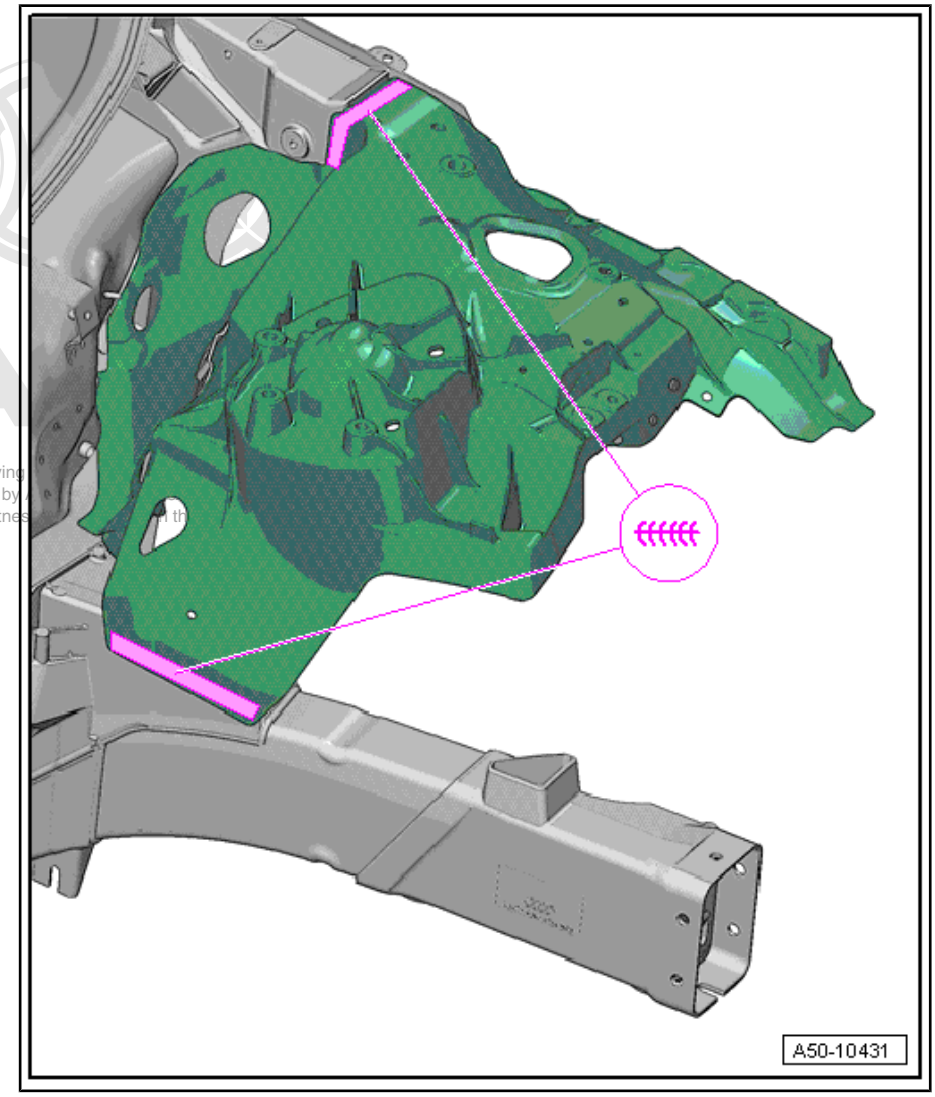

Screw hole markers - VAS 6631 - -a- into front wheel housing and mark holes using plastic hammer.

– Detach part.

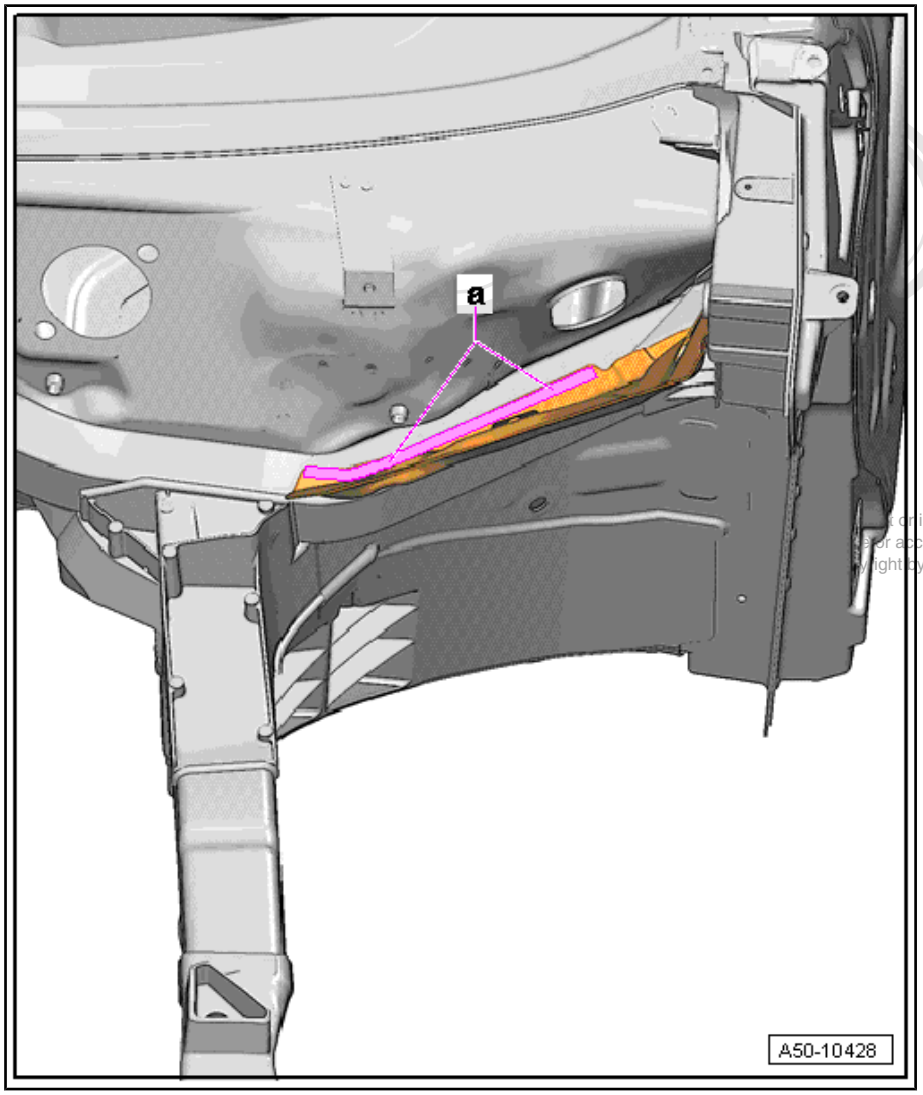

Screw hole markers - VAS 6631 - -a and b- into suspension strut mounting.

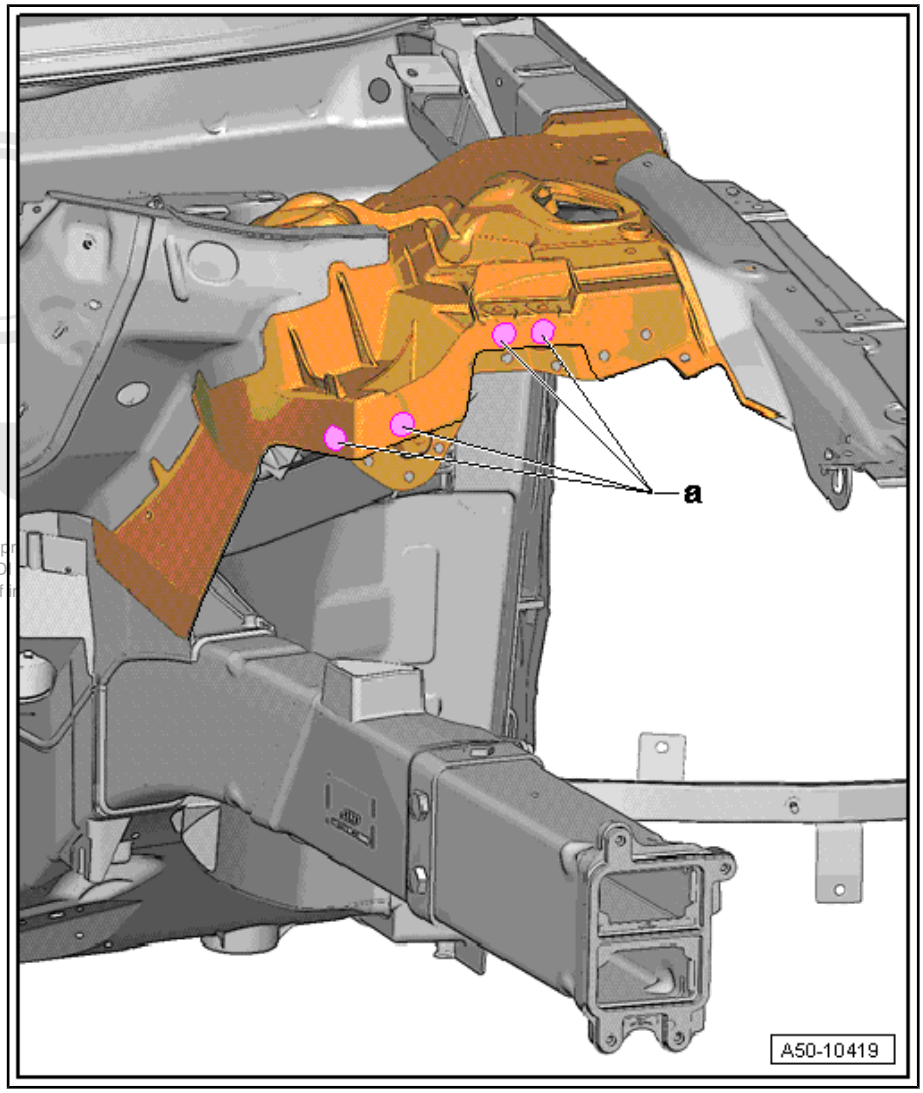

Match up reinforcement for inner suspension strut mounting at points -a and b- and mark holes using plastic hammer.

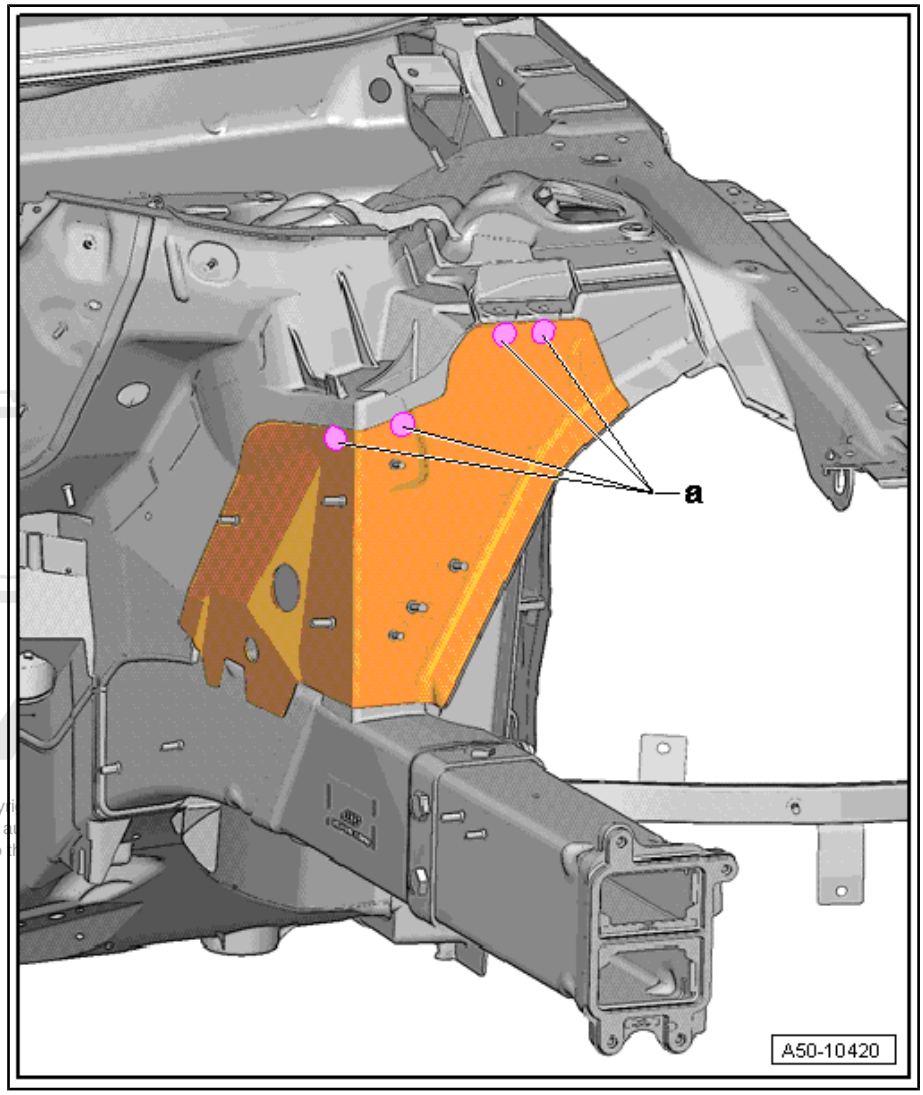

Note

When marking the separating cut, include a material allowance of 20 mm for overlap.

– Make separating cut on replacement part as shown using body saw .

– Drill marked holes (7 mm ∅) for flow-drill screws in front wheel housing using drill .

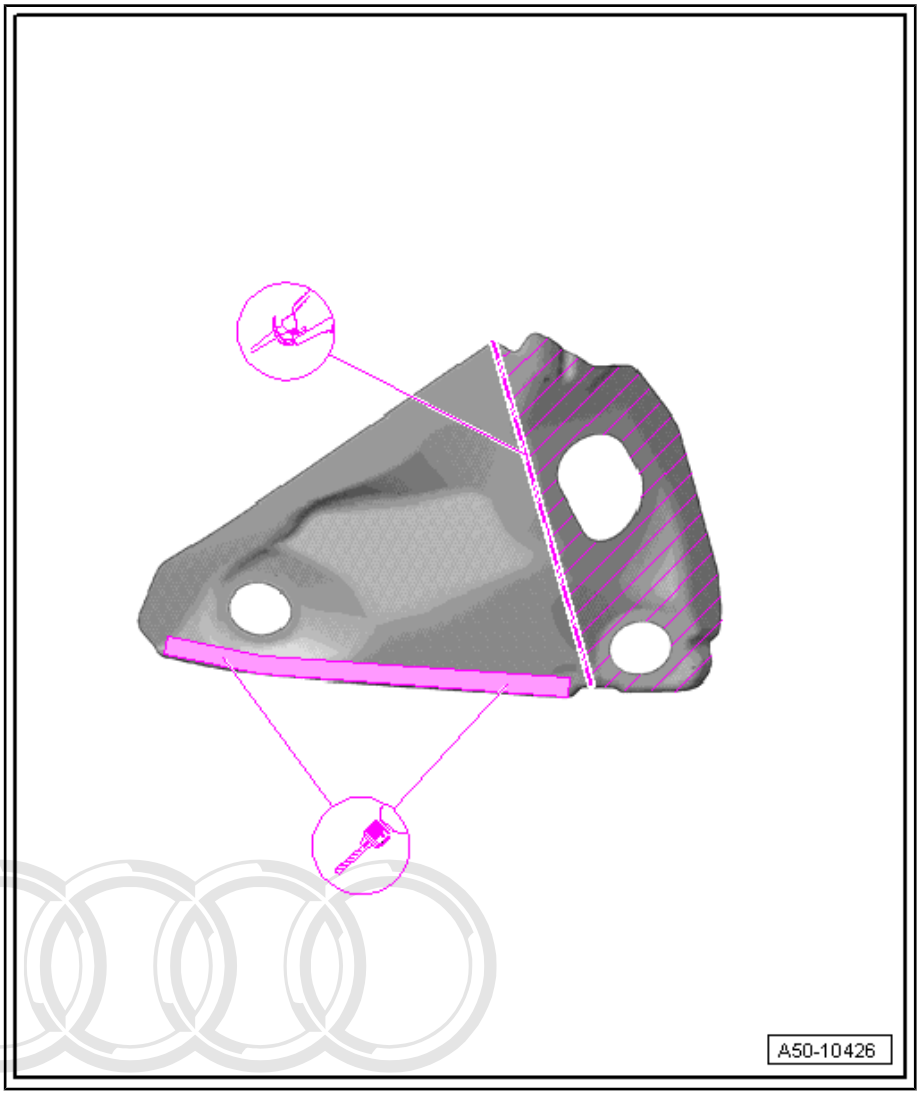

– Rivet suspension turret and front wheel housing using rechargeable riveter - VAS 5279 A- or compact booster - VAS 6790 - . For attachments see ⇒ page 15 .

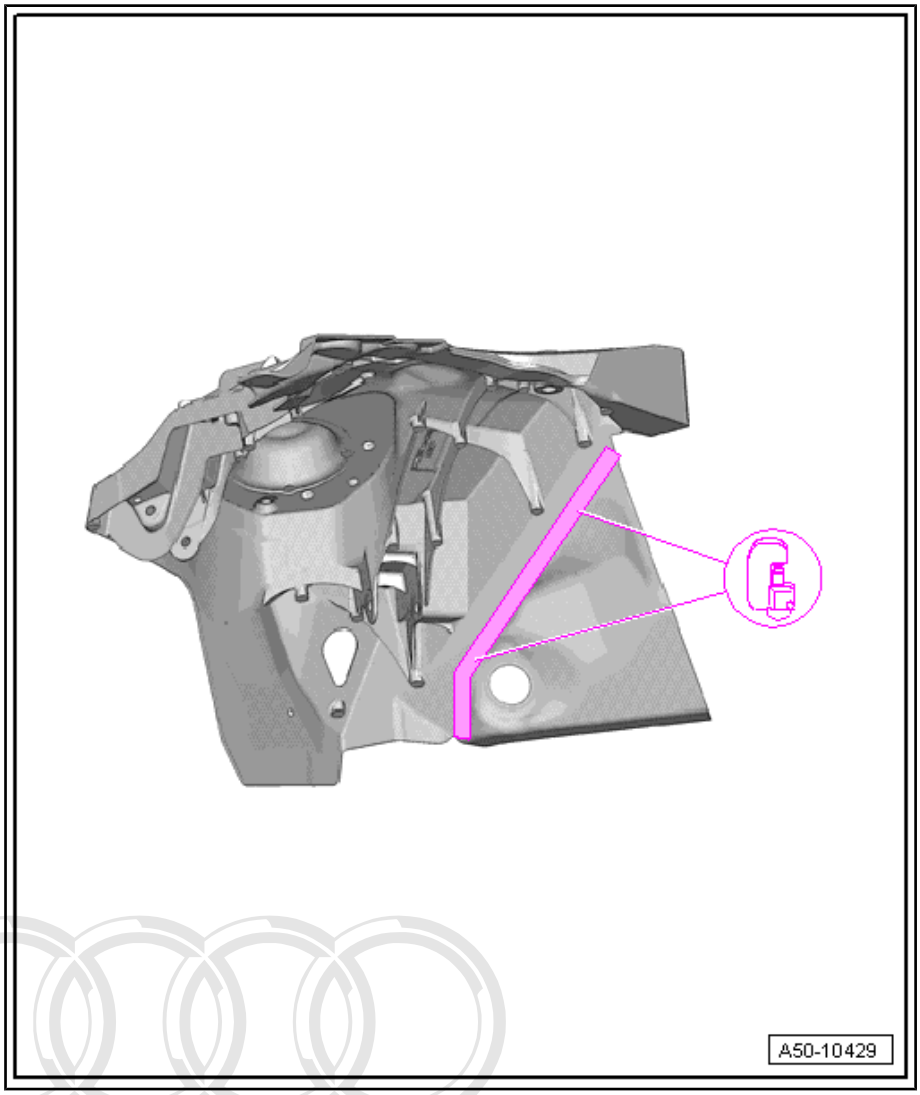

Welding in

- Prepare flanges on body and new parts for welding.
- Fix new part in position with alignment bracket.
- Weld in separating cut at front wheel housing using shielded arc welding equipment : SG continuous seam.

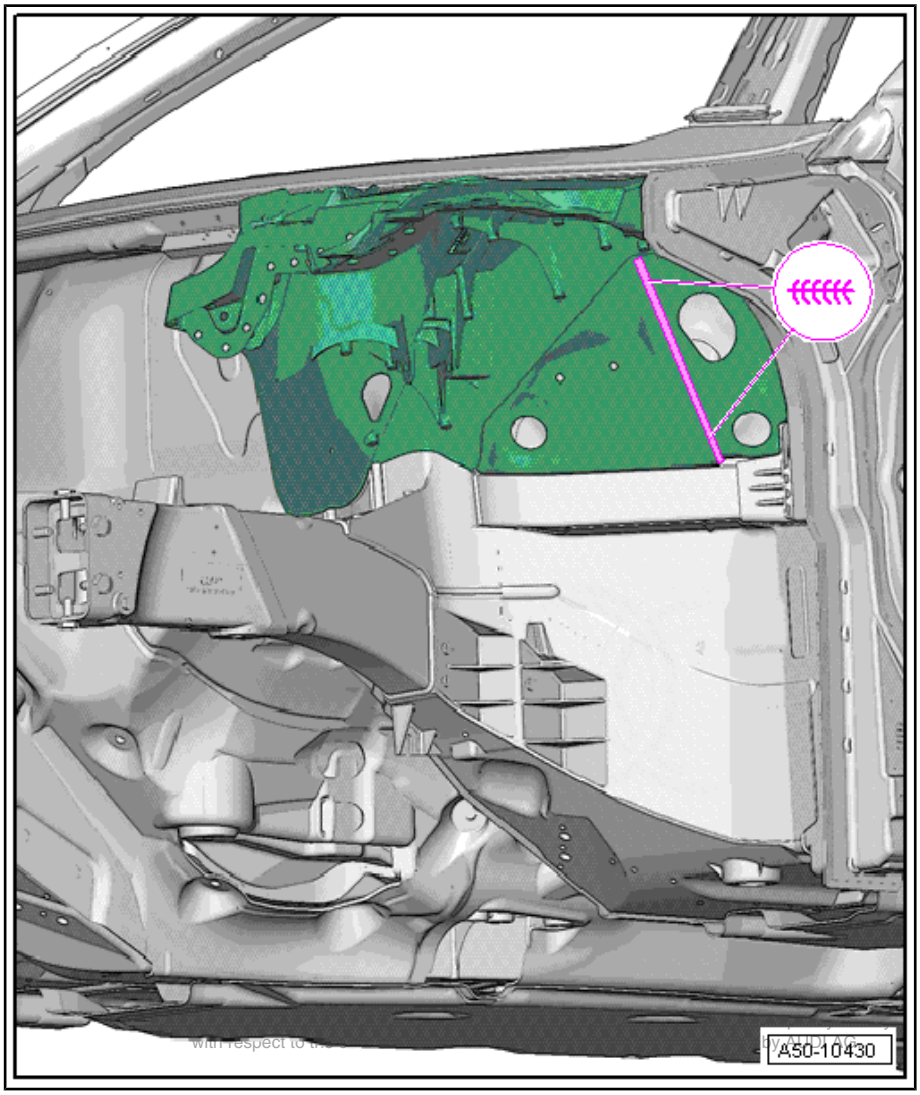

Preparing joints for adhesive application

- Clean flanges on body and new parts with cleaning solution - D 009 401 04- .
- Prepare body and reinforcement for suspension strut mounting for riveting.
- Prepare bonding area with silicate stone - DA 009 800 - and clean.
- Apply aluminium primer - DA 009 801 - to bonding surfaces using applicator - D 009 500 25 - .

Apply 2-component epoxy adhesive - DA 001 730 A2- to entire riveting area using pneumatic glue gun - V.A.G 2005 B- .

Riveting in

- Rivet in reinforcement for suspension strut mounting using rechargeable riveter - VAS 5279 A- or compact booster - VAS 6790 - . For attachments see ⇒ page 15 .
- Rivet in reinforcement for suspension strut mounting using pop rivet pliers - VAS 5072- .
- In place of pop-riveting, joint can also be welded using shielded arc welding equipment : SG continuous seam (staggered - with gaps).

– Secure original joint with flow-drill screws using socket for flow-drill screws - VAS 6426 - ⇒ page 4 .

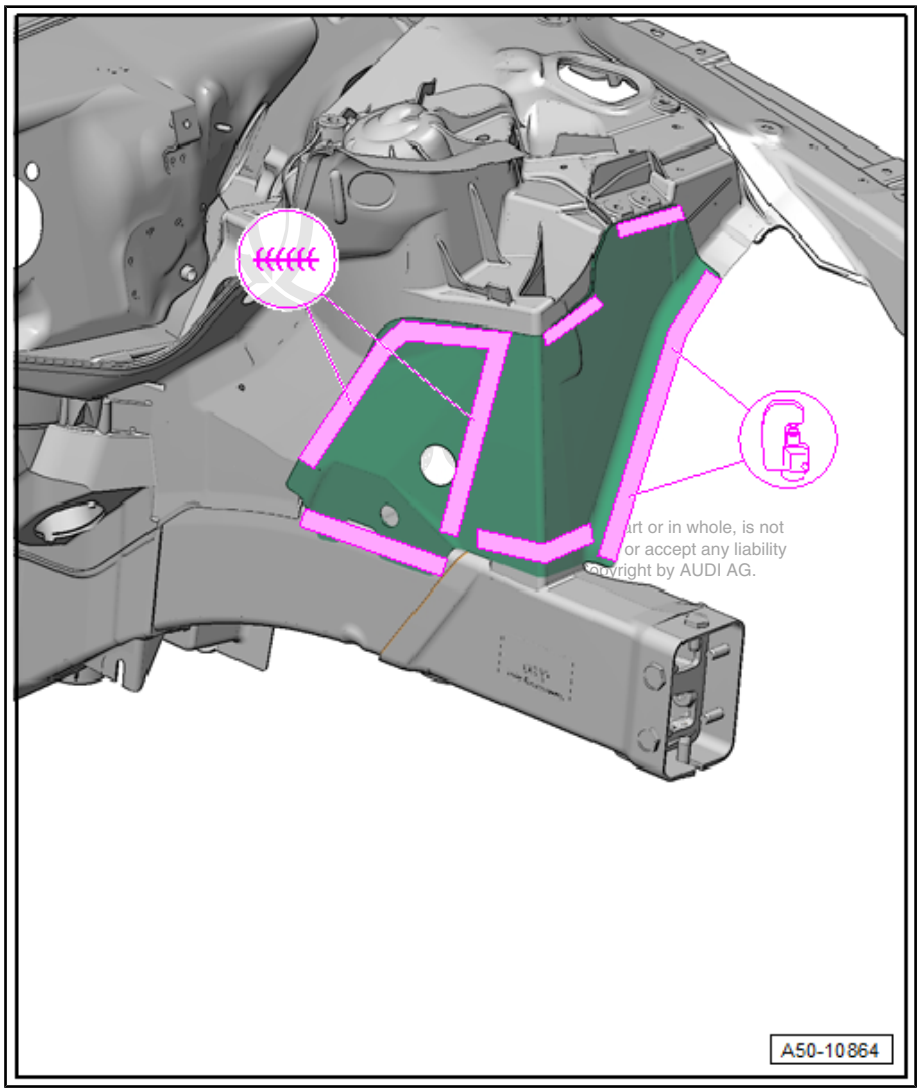

RO: 50 79 49 50

3 Repairing threads for attachment of subframe

- Subframe already removed ⇒ Running gear, suspension, steering; Rep. gr. 40 ; Subframe, anti-roll bar, suspension links

Note

The following description shows the thread repair for the subframe attachment on the front left longitudinal member; the procedure for the other attachments is basically the same.

Special tools and workshop equipment required

- Thread repair kit M12x1.5 - VAS 6058-
- Drill - VAS 6267-

1 - Helicoil thread insert

Note

If the attachments becom aged more than once, th li- nal member must be rep

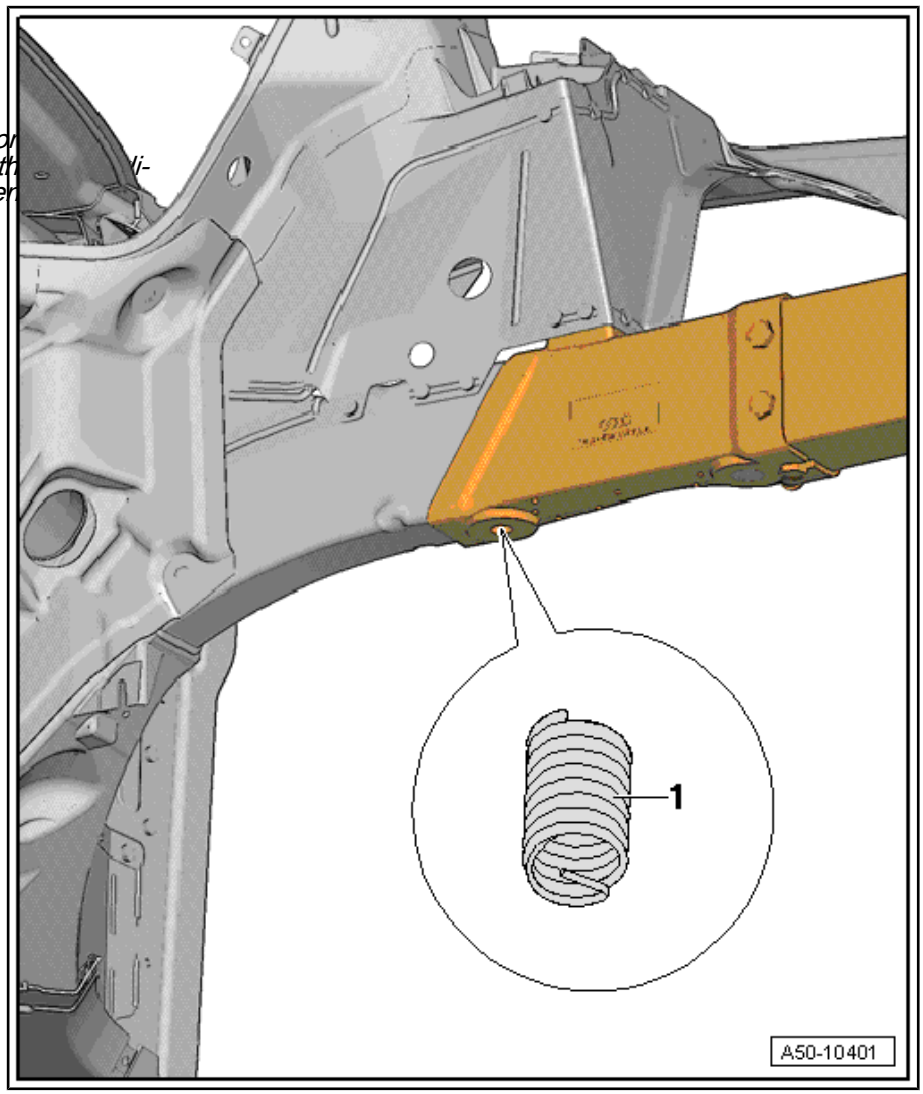

3.1 Contents of thread repair kit

1 - Drill bit 12.5 mm ∅

2 - Thread tap M 12 x 1.5

3 - Fitting spindle

4 - Thread insert M 12 x 1.5 x 24 (-VAS 6058/1-)

5 - Pin breaker with magnetic tip

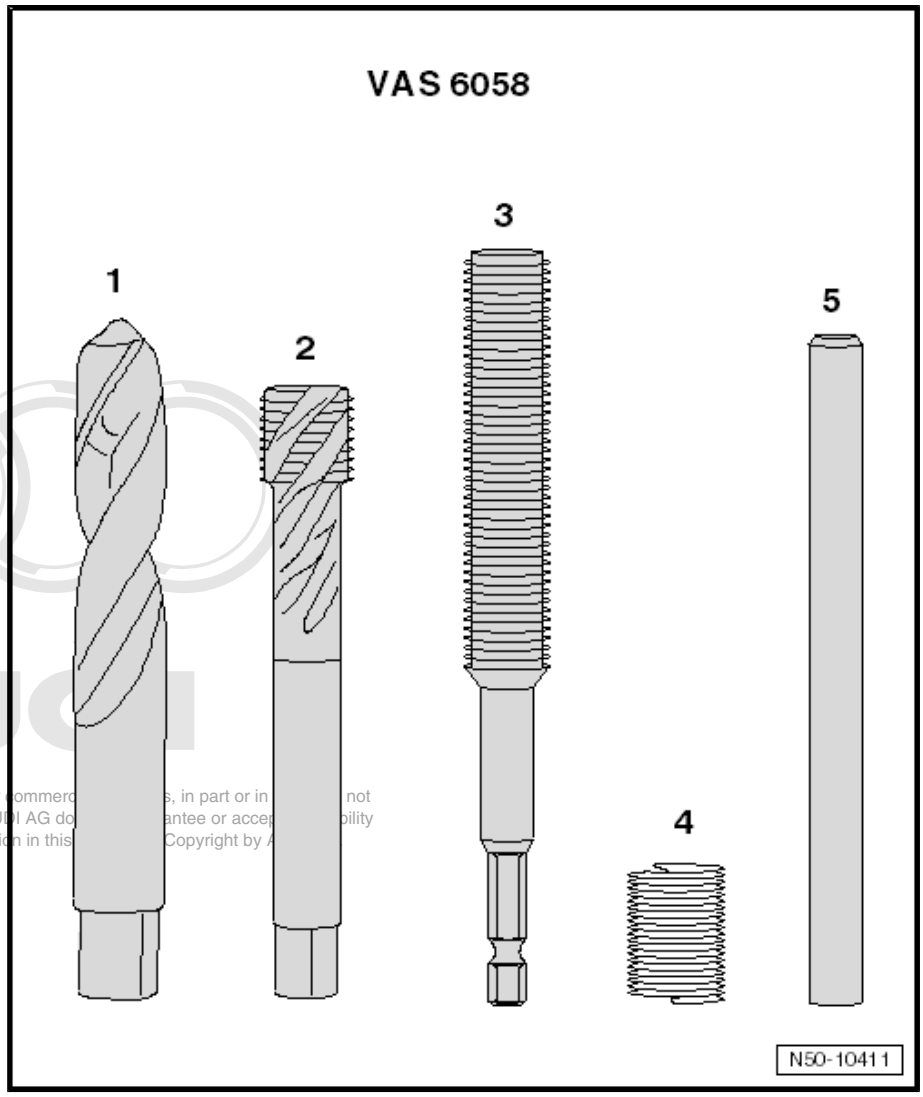

3.2 Repairing thread

3.2.1 Making drilling for thread

⚠ Caution

Always wear eye protection when drilling!

– Drill hole for thread using drill bit (twist drill).

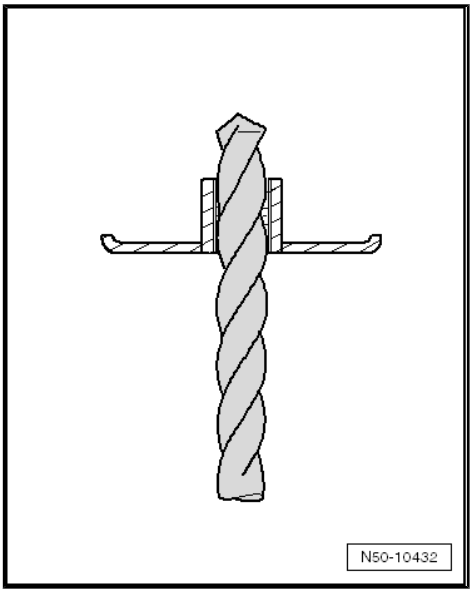

Note

- *Use drill for drilling and cutting.*
- *The drill must be supported by a second mechanic using the additional handle.*
- *Take care to keep the drill straight.*

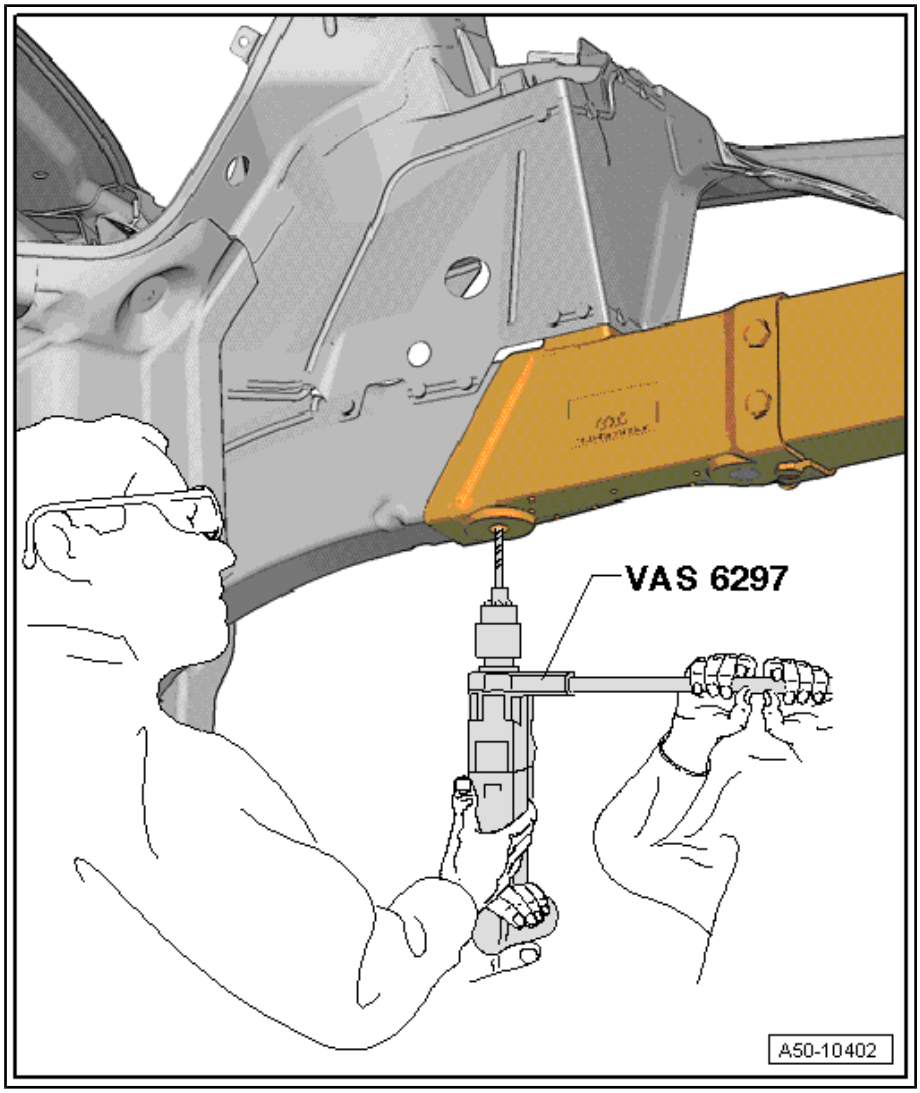

3.2.2 Cutting thread

Caution

Always wear eye protection when cutting the thread and blowing out the threaded drilling.

– Cut thread using thread tap.
– Blow out threaded drilling with compressed air.

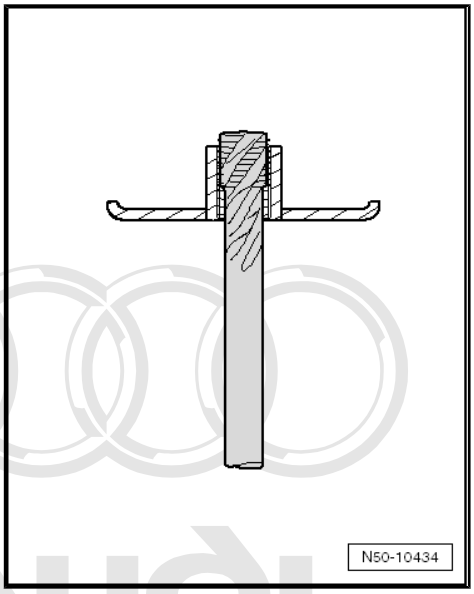

3.2.3 Fitting thread insert

– Screw thread insert -3- onto fitting spindle until driving pin -2- on thread insert makes contact with driving lug -1- on fitting spindle.

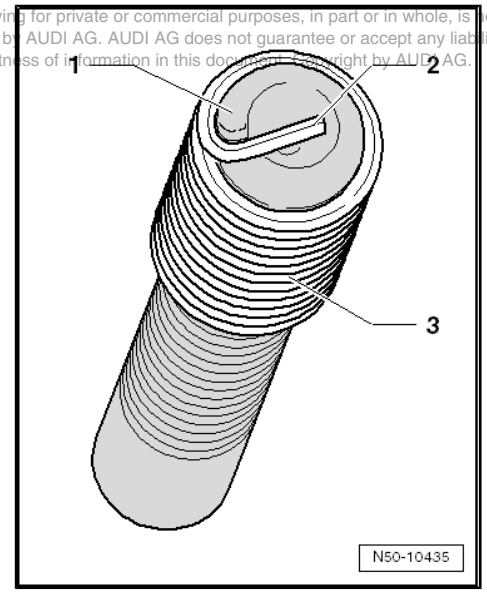

Note

The thread insert should screw in easily.

– Screw thread insert into threaded plate until it is flush with outside of threaded plate (visual check).

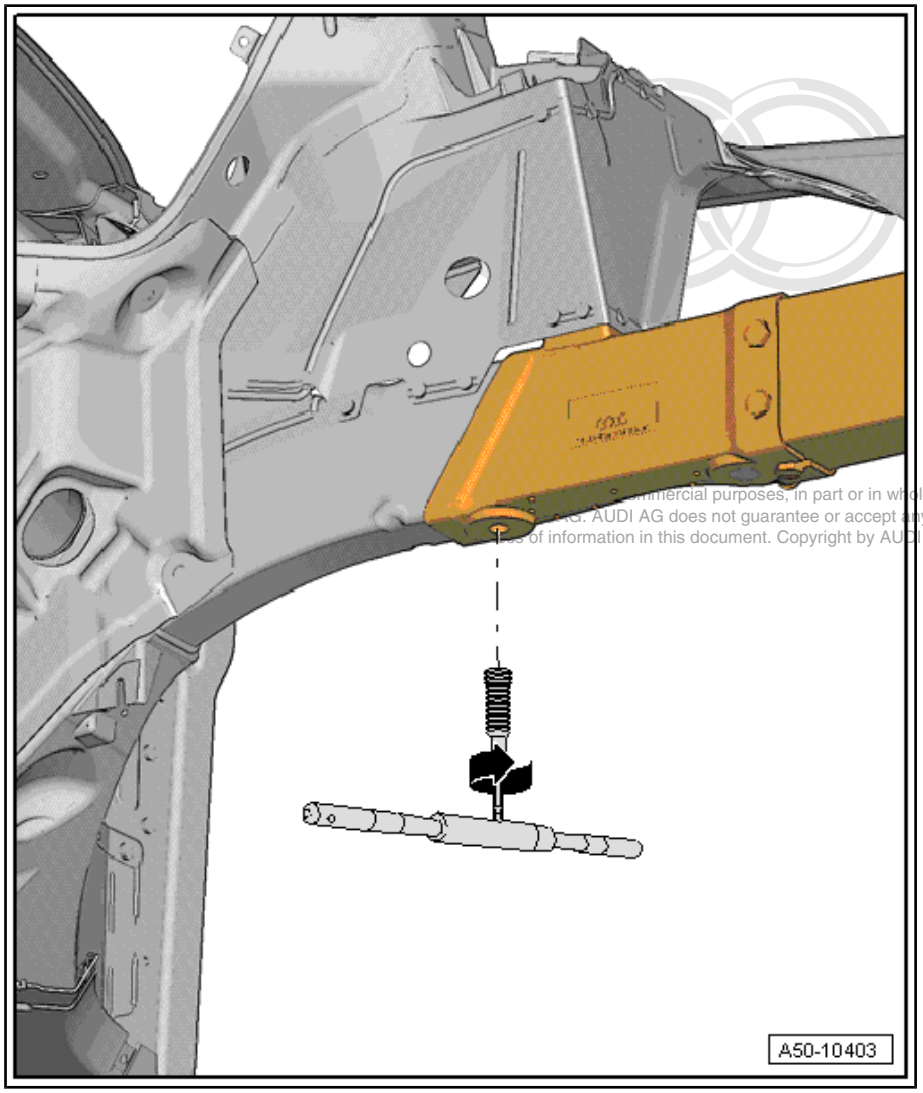

- Then screw in thread insert $^{1}/_{4}$ turn further.
- Unscrew fitting spindle.
- Break off drive pin of thread insert using pin breaker.

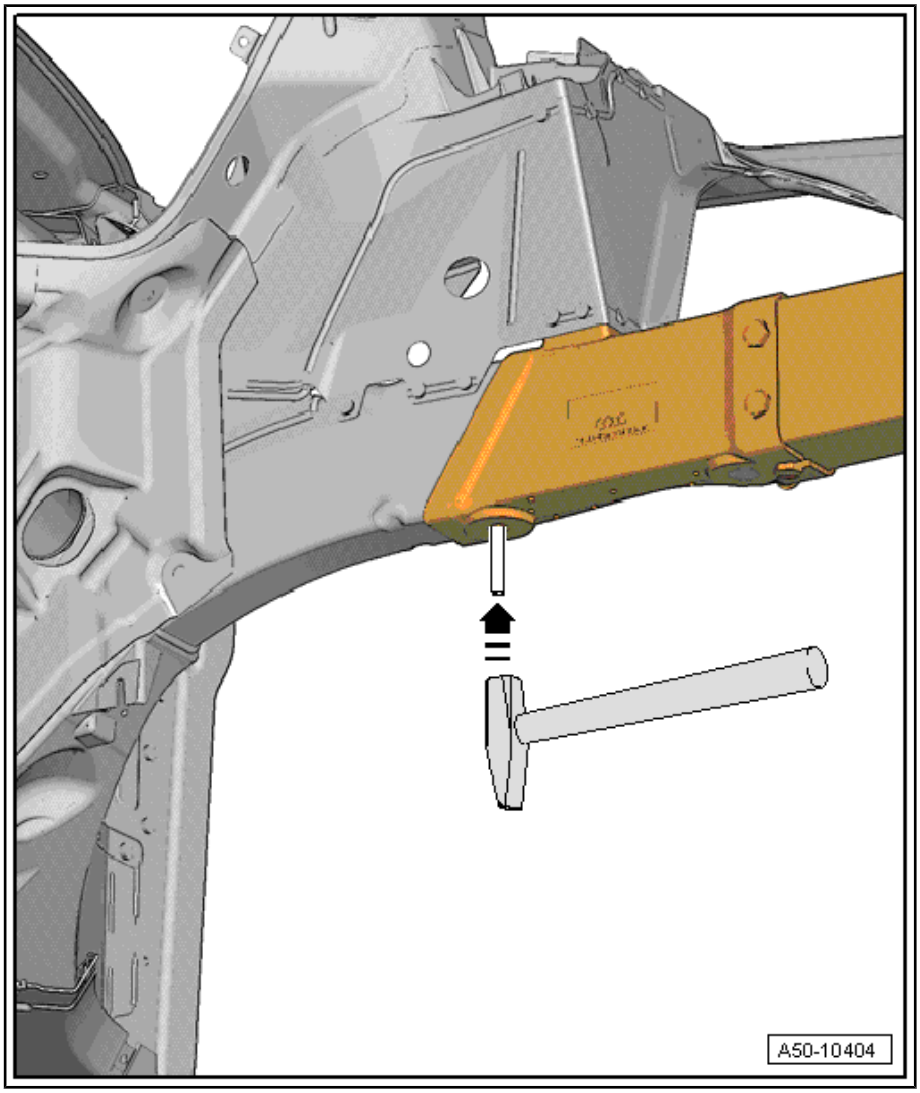

– Install subframe and tighten to specified torque ⇒ Running gear, axles, steering; Rep. gr. 40 ; Subframe, anti-roll bar, suspension links .

RO: 50 79 55 03

4 Front longitudinal member - Renewal

1 - Front longitudinal member

2 - Suspension turret

3 - Longitudinal member

4 - Joint secured with flow-drill screws

5 - Separating cut (partial renewal is possible with this separating cut)

4.1 Notes for vehicles with hybrid drive

WARNING

Safety hazard: the engine can start unexpectedly.

Before carrying out general work on a vehicle with high-voltage electrical system, switch off the ignition and remove the ignition key from the vehicle.

DANGER!

When working on a vehicle with the ignition switched on or while the drive system is active, the engine can start unexpectedly and exhaust fumes can cause a health hazard in closed rooms. Moving parts can trap or draw in parts of the body and/or clothing (safety hazard).

Before switching on the ignition, perform the following steps:

- *Move selector lever to position P*
- *Activate parking brake*
- *Switch off ignition*
- *Open bonnet*
- *Connect battery charger (e.g. - VAS 5095A-) to jump-start connections of 12 V electrical system.*
- *Switch on ignition*

WARNING

Working on vehicles with high-voltage wiring:

- *Do not support yourself or tools on high-voltage wiring or associated components --> this can damage the insulation.*
- *High-voltage wiring must not be excessively bent or kinked --> this can damage the insulation.*
- *The round high-voltage connectors are colour-coded with an external coloured ring and are provided with mechanical coding or guide lugs. It is important to observe this coding when joining up the round high-voltage connectors; otherwise the connectors can be damaged.*

DANGER!

Risk of fatal injury if high-voltage components are damaged.

Observe the following when working in the vicinity of high-voltage components or wiring:

- *It is not permitted to use cutting or forming tools, other sharp-edged tools or heat sources such as welding, brazing, soldering, hot air or thermal bonding equipment.*
- *Before starting work, visually inspect the high-voltage components in the areas involved.*
- *Before working in the engine compartment, visually inspect the power and control electronics for electric drive - JX1- , electric drive motor - V141- , air conditioner compressor - V470- and high-voltage wiring.*
- *Before working on the vehicle underbody, visually inspect the high-voltage wiring and covers.*
- *Before working on the rear section of the vehicle, visually inspect the high-voltage wiring and the hybrid battery unit with the maintenance connector for high-voltage system - TW - .*
- *Visually inspect all potential equalisation lines.*

Check the following when making the visual inspection:

- *There must be no external damage on any component.*
- *The insulation of the high-voltage wiring and potential equalisation lines must not be damaged.*
- *There must be no unusual deformation of the high-voltage wiring.*
- *All high-voltage components must be identified by a red warning sticker.*

DANGER!

High voltage can cause fatal injury.

Danger of severe or fatal injuries from electric shock.

- *The high-voltage system may only be re-energised by a suitably qualified person (Audi high-voltage technician).*
- *The system may only be re-energised using the vehicle diagnostic tester via “Guided Fault Finding”.*
- *The vehicle is then made ready for operation again by the qualified person (Audi high-voltage technician).*
- *The qualified person (Audi high-voltage technician) marks the vehicle by attaching the appropriate warning signs.*

DANGER!

High voltage can cause fatal injury.

Danger of severe or fatal injuries from electric shock.

- *The high-voltage system may only be de-energised by a suitably qualified person (Audi high-voltage technician).*
- *It must be definitely confirmed that the high-voltage system is de-energised. The system may only be de-energised using the vehicle diagnostic tester via "Guided Fault Finding".*
- *The qualified person (Audi high-voltage technician) confirms that the system is de-energised and ensures that it cannot be re-energised by fitting the locking cap - T40262- and by storing the ignition key and the maintenance connector for high-voltage system - TW - in a safe place.*
- *The qualified person (Audi high-voltage technician) marks the vehicle by attaching the appropriate warning signs.*

Note

Please refer to the Electronic parts catalogue when ordering replacement parts.

WARNING

Accidents can be caused if the driver is distracted by test equipment while road-testing, or if test equipment is not properly secured.

Injuries can be caused if the passenger's airbag is triggered in a collision.

- *The use of test equipment while driving causes distraction.*
- *There is an increased risk of injury if test equipment is not secured.*
- *Move the front passenger's seat back as far as it will go.*
- *Use only the vehicle diagnostic and service information system - VAS 5052- or the diagnostic system - VAS 5053- .*
- *The test equipment -1- must rest flat on the passenger's thighs (as shown in illustration) and must be operated by the passenger.*

4.2 Tools

Special tools and workshop equipment required

- Compact angle grinder - VAS 5167-
- Socket for flow-drill screws - VAS 6426 -
- Compact booster - VAS 6790-

- Rechargeable riveter - VAS 5279 A-

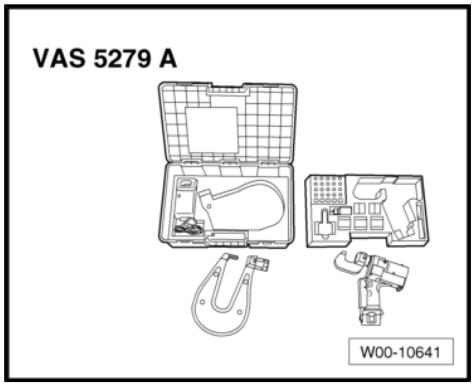

- Shielded arc welding equipment - VAS 6388-

4.3 Procedure

Note

- *The Audi A8 employs flow-drill screws which can be renewed using socket for flow-drill screws - VAS 6426- or -6426/1- .*
- *Repairing joints with flow-drill screws* *⇒ page 4*

WARNING

Take care not to damage aluminium node castings when cutting.

Cutting locations

- Front longitudinal member (part section) removed ⇒ page 108

– Separate original joint using rechargeable riveter - VAS 5279 A- or compact booster - VAS 6790- . For attachments see ⇒ page 15 .

– Remove flow-drill screws using socket for flow-drill screws - VAS 6426- and separate joint -a-.

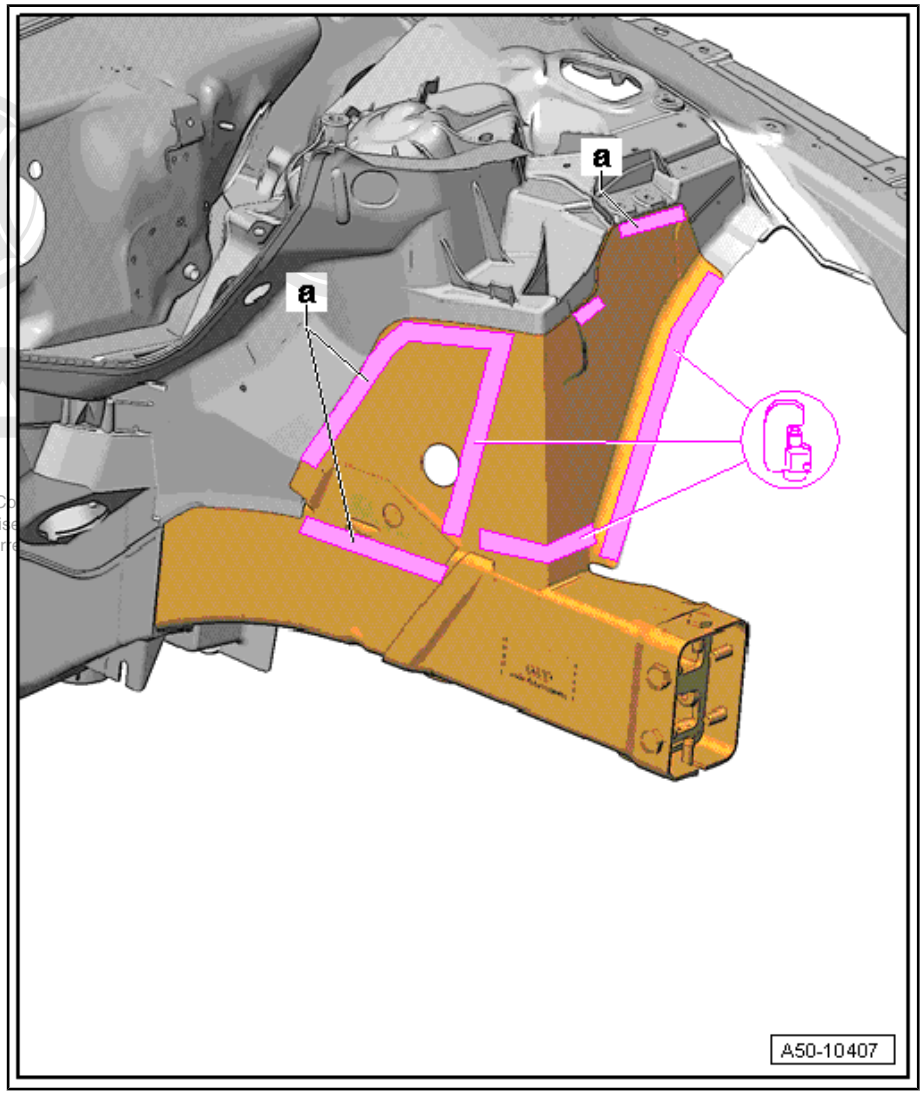

– Separate original joint using compact angle grinder .
– Remove flow-drill screws using socket for flow-drill screws - VAS 6426 - and separate joint -a-.

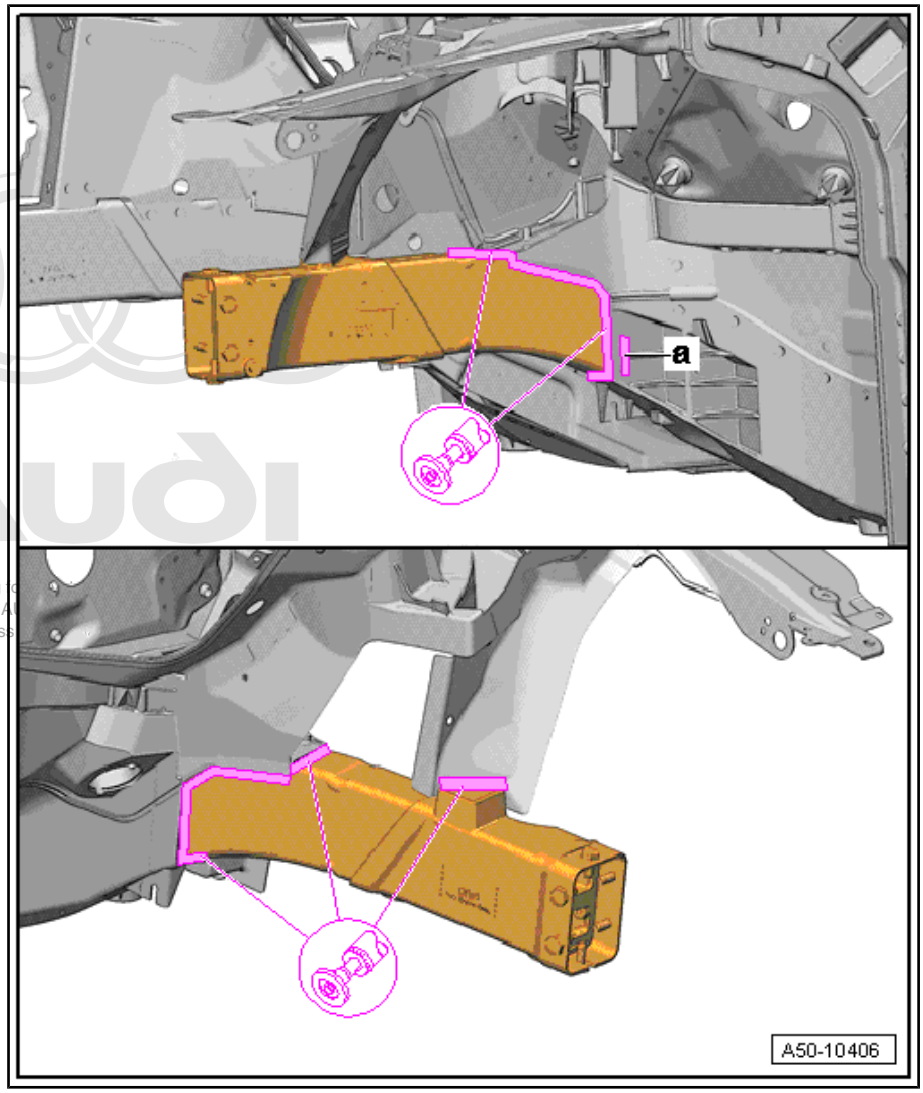

– Remove remaining material from node casting using compact angle grinder .

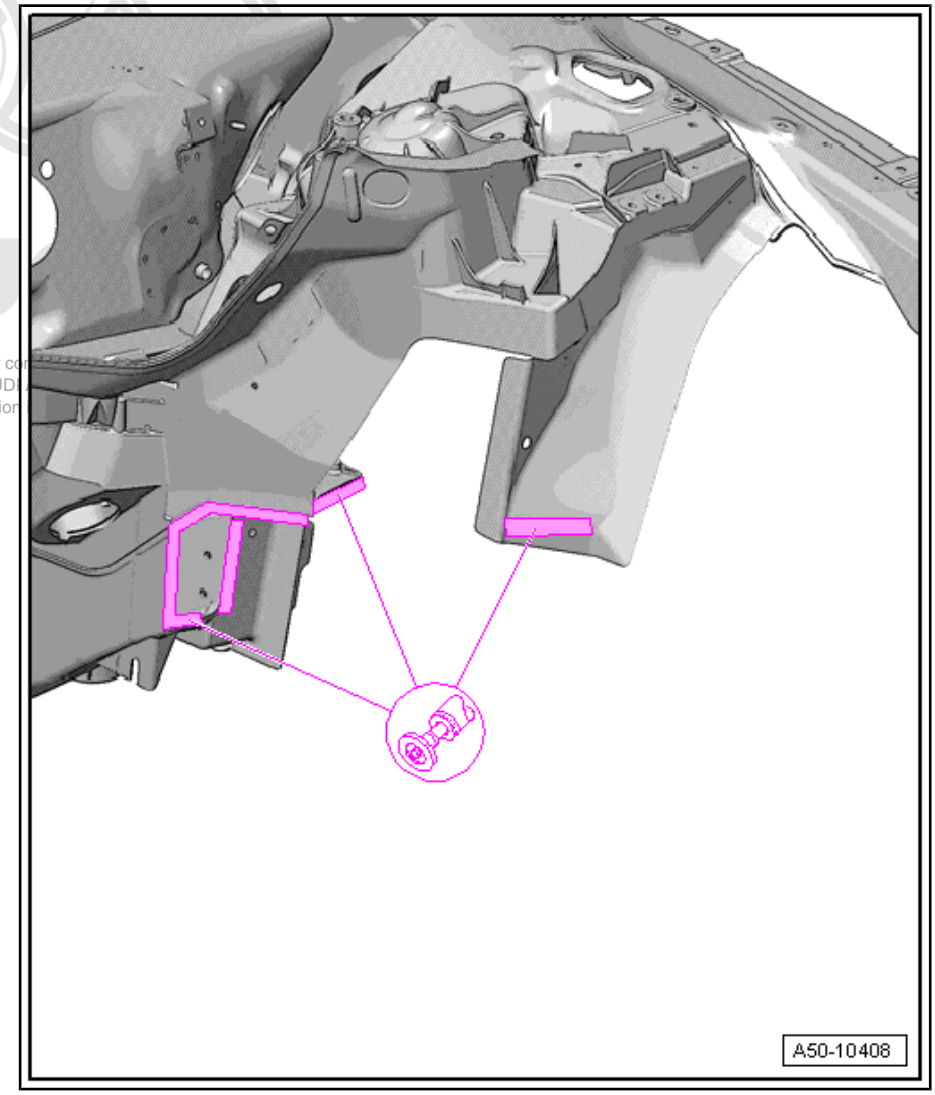

Replacement part

- Front longitudinal member
- Support for front suspension strut mounting
- Punch rivets (self-piercing rivets)

Preparing new part

Screw hole markers - VAS 6631- -a- and -b- into suspension strut mounting.

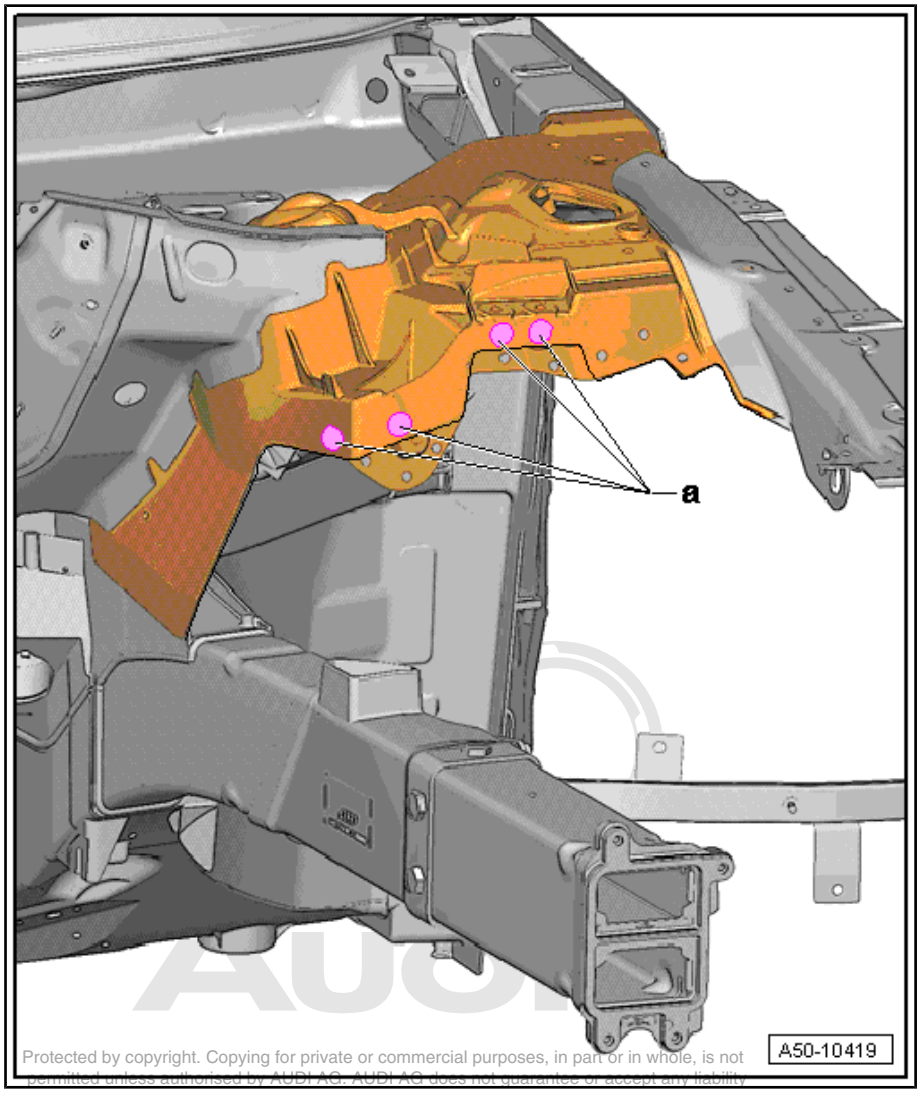

Match up support for inner suspension strut mounting at points -a- and mark holes using plastic hammer. Then match up at points -b- and mark holes using plastic hammer.

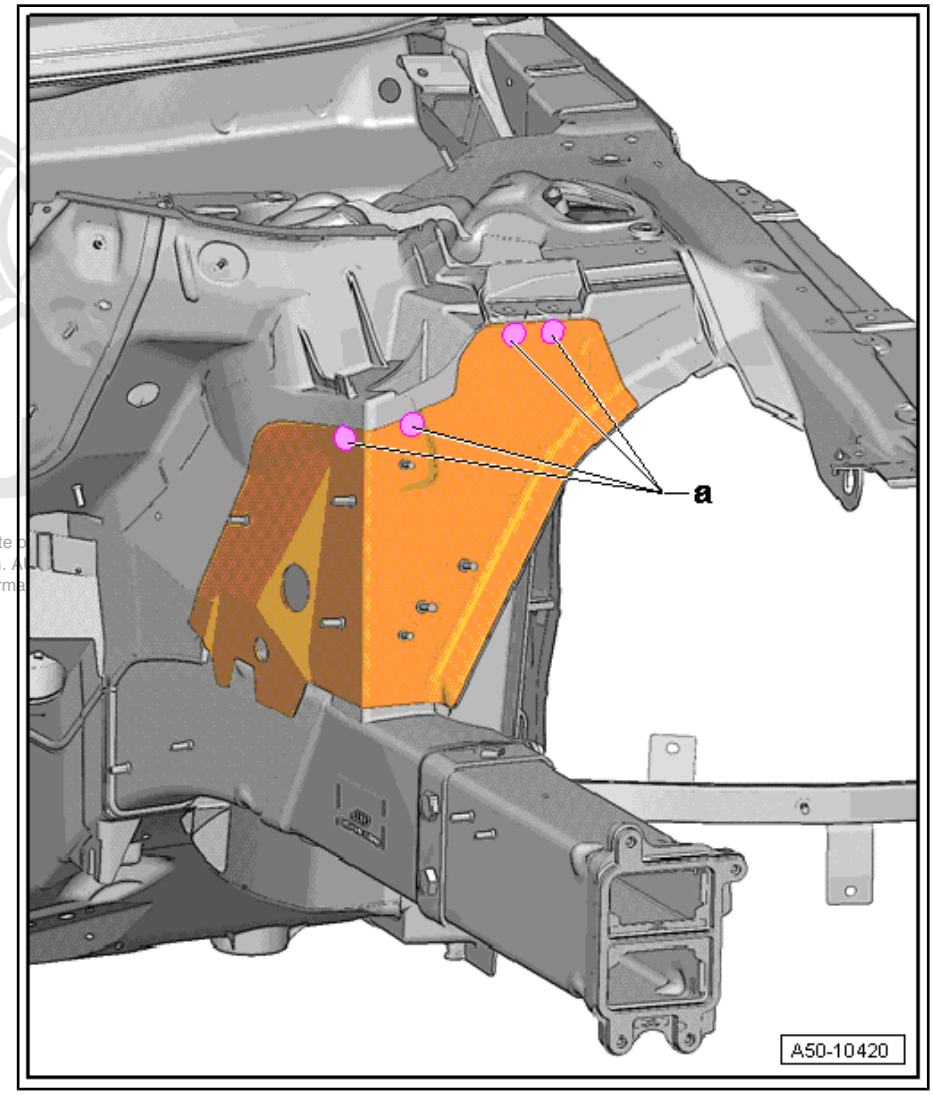

Preparing replacement part

- Drill marked holes (7 mm ∅) for flow-drill screws -b- in reinforcement for suspension strut mounting using drill .
- Drill holes (4.8 mm ∅) for pop-riveted joint -a- in reinforcement for suspension strut mounting using drill .
- Drill holes (4.0 mm ∅) in front longitudinal member using drill .
- Deburr drill holes.

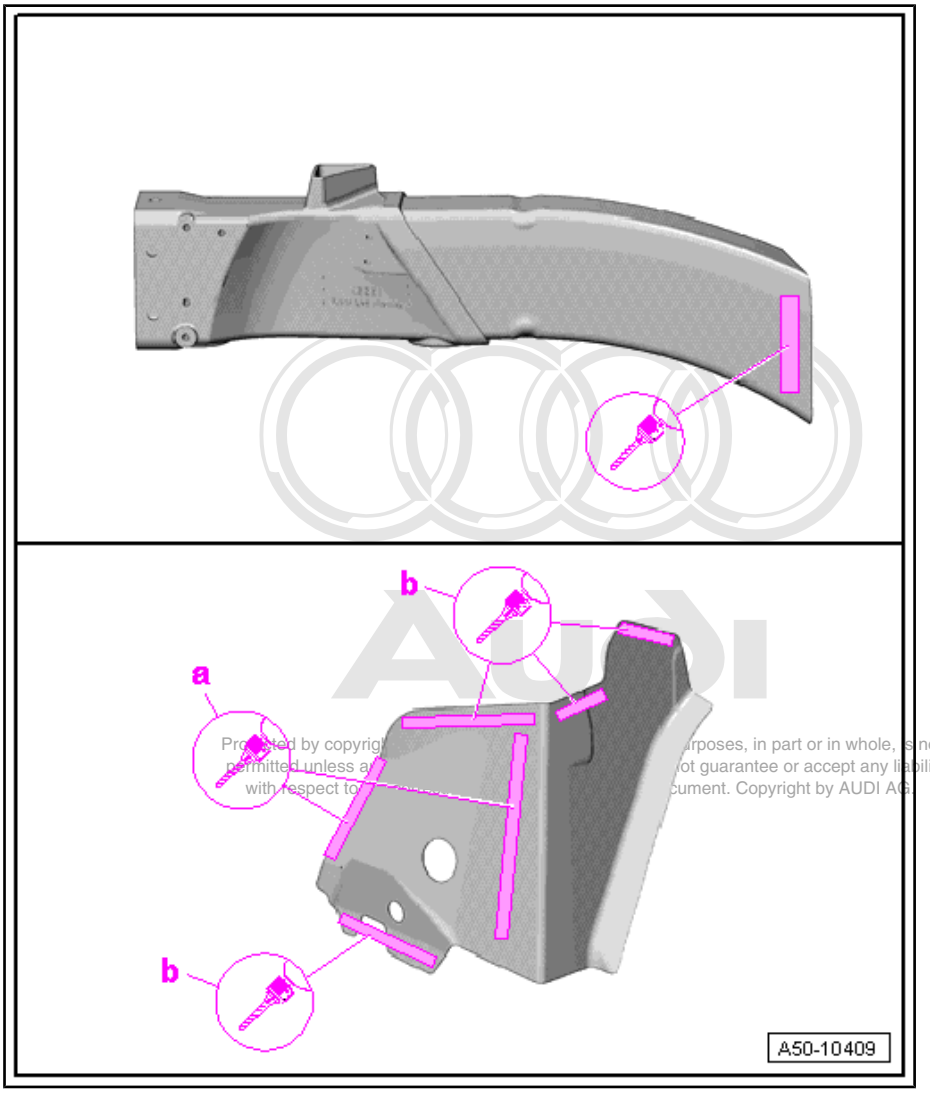

– Match up new part to body.
– Prepare flanges on body and new parts for welding.
– Fix longitudinal member in position on alignment bracket.

Welding in

– Weld in longitudinal member at node casting using shielded arc welding equipment : SG continuous seam.
– Weld support for suspension strut mounting to longitudinal member using shielded arc welding equipment : SG continuous seam.

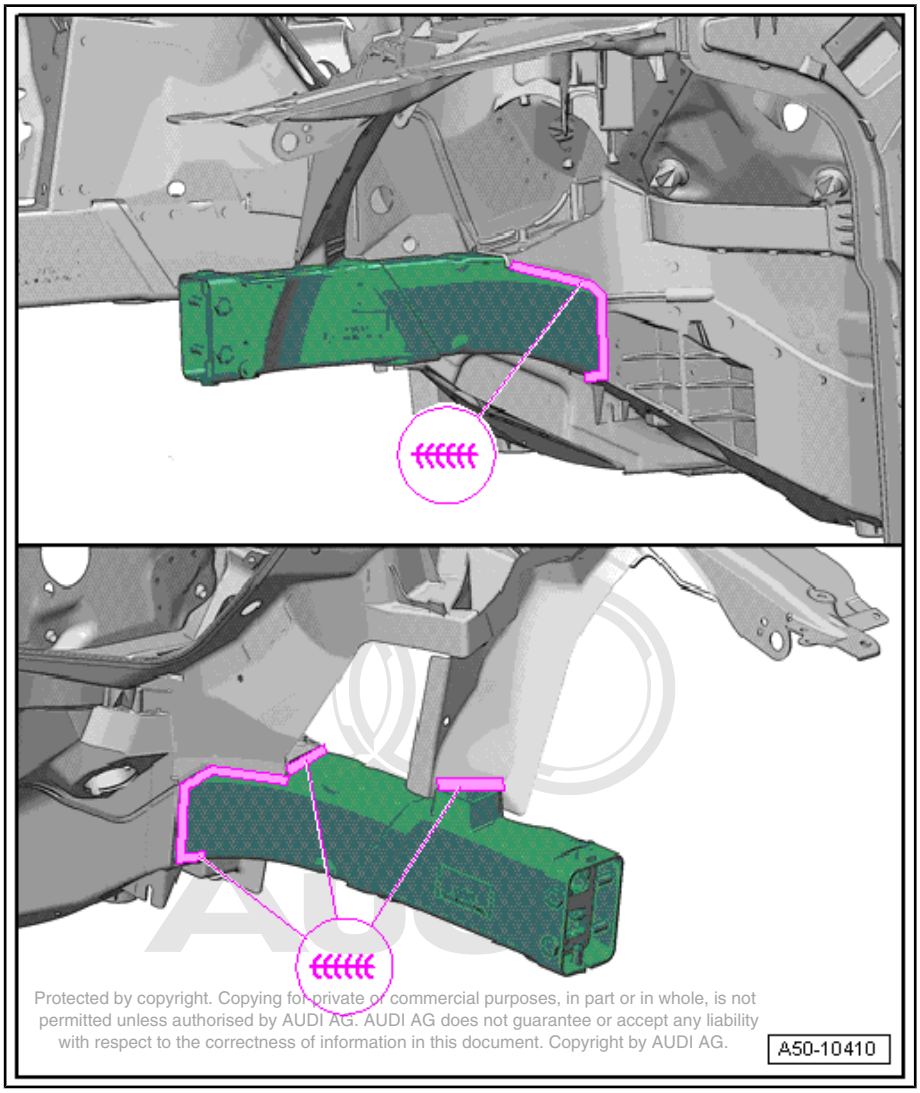

Preparing joints for adhesive application

- Prepare body and reinforcement for suspension strut mounting for riveting.
- Clean bonding surfaces with cleaning solution - D 009 401 04- .
- Prepare bonding area with silicate stone - DA 009 800 - and clean.
- Apply aluminium primer - DA 009 801 - to bonding surfaces using applicator - D 009 500 25 - .

Apply 2-component epoxy adhesive - DA 001 730 A2- to entire riveting area using pneumatic glue gun - V.A.G 2005 B- .

Riveting in

- Rivet in reinforcement for suspension strut mounting using rechargeable riveter - VAS 5279 A- or compact booster - VAS 6790 - . For attachments see ⇒ page 15 .
- Rivet in reinforcement for suspension strut mounting using pop rivet pliers - VAS 5072- .
- In place of pop-riveting, joint can also be welded using shielded arc welding equipment : SG continuous seam (staggered - with gaps).

– Secure original joint with flow-drill screws using socket for flow-drill screws - VAS 6426 - ⇒ page 4 .

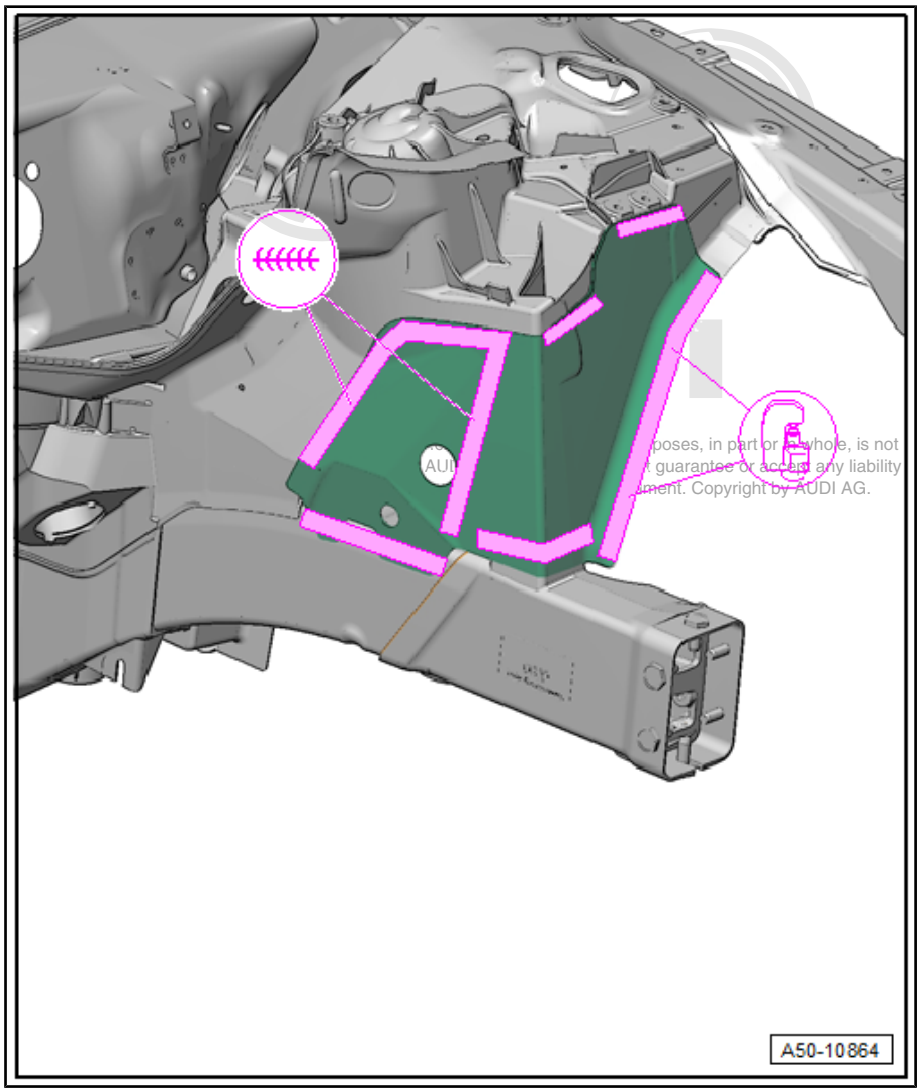

• Install front longitudinal member (part section) ⇒ page 108 .

RO: 50 79 55 03

5 Longitudinal member - Renewal

1 - Longitudinal member

2 - Front wheel housing

3 - Plenum chamber cross member

4 - Inner A-pillar

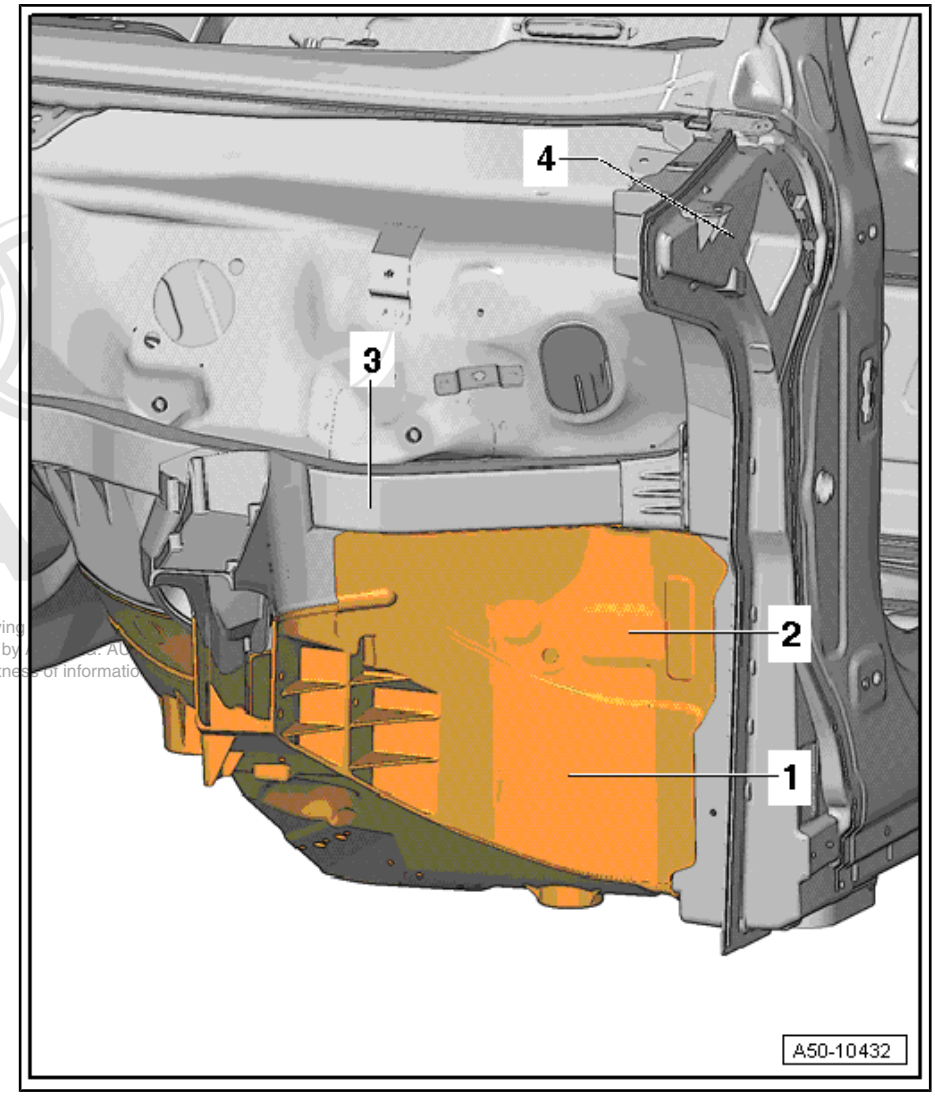

5.1 Notes for vehicles with hybrid drive

WARNING

Safety hazard: the engine can start unexpectedly.

Before carrying out general work on a vehicle with high-voltage electrical system, switch off the ignition and remove the ignition key from the vehicle.

DANGER!

When working on a vehicle with the ignition switched on or while the drive system is active, the engine can start unexpectedly and exhaust fumes can cause a health hazard in closed rooms. Moving parts can trap or draw in parts of the body and/or clothing (safety hazard).

Before switching on the ignition, perform the following steps:

- *Move selector lever to position P*
- *Activate parking brake*
- *Switch off ignition*
- *Open bonnet*
- *Connect battery charger (e.g. - VAS 5095A-) to jump-start connections of 12 V electrical system.*
- *Switch on ignition*

WARNING

Working on vehicles with high-voltage wiring:

- *Do not support yourself or tools on high-voltage wiring or associated components --> this can damage the insulation.*
- *High-voltage wiring must not be excessively bent or kinked --> this can damage the insulation.*
- *The round high-voltage connectors are colour-coded with an external coloured ring and are provided with mechanical coding or guide lugs. It is important to observe this coding when joining up the round high-voltage connectors; otherwise the connectors can be damaged.*

DANGER!

Risk of fatal injury if high-voltage components are damaged.

Observe the following when working in the vicinity of high-voltage components or wiring:

- *It is not permitted to use cutting or forming tools, other sharp-edged tools or heat sources such as welding, brazing, soldering, hot air or thermal bonding equipment.*
- *Before starting work, visually inspect the high-voltage components in the areas involved.*
- *Before working in the engine compartment, visually inspect the power and control electronics for electric drive - JX1- , electric drive motor - V141- , air conditioner compressor - V470- and high-voltage wiring.*
- *Before working on the vehicle underbody, visually inspect the high-voltage wiring and covers.*
- *Before working on the rear section of the vehicle, visually inspect the high-voltage wiring and the hybrid battery unit with the maintenance connector for high-voltage system - TW - .*
- *Visually inspect all potential equalisation lines.*

Check the following when making the visual inspection:

- *There must be no external damage on any component.*
- *The insulation of the high-voltage wiring and potential equalisation lines must not be damaged.*
- *There must be no unusual deformation of the high-voltage wiring.*
- *All high-voltage components must be identified by a red warning sticker.*

DANGER!

High voltage can cause fatal injury.

Danger of severe or fatal injuries from electric shock.

- *The high-voltage system may only be re-energised by a suitably qualified person (Audi high-voltage technician).*
- *The system may only be re-energised using the vehicle diagnostic tester via "Guided Fault Finding".*
- *The vehicle is then made ready for operation again by the qualified person (Audi high-voltage technician).*
- *The qualified person (Audi high-voltage technician) marks the vehicle by attaching the appropriate warning signs.*

DANGER!

High voltage can cause fatal injury.

Danger of severe or fatal injuries from electric shock.

- *The high-voltage system may only be de-energised by a suitably qualified person (Audi high-voltage technician).*
- *It must be definitely confirmed that the high-voltage system is de-energised. The system may only be de-energised using the vehicle diagnostic tester via "Guided Fault Finding".*
- *The qualified person (Audi high-voltage technician) confirms that the system is de-energised and ensures that it cannot be re-energised by fitting the locking cap - T40262- and by storing the ignition key and the maintenance connector for high-voltage system - TW - in a safe place.*
- *The qualified person (Audi high-voltage technician) marks the vehicle by attaching the appropriate warning signs.*

Note

Please refer to the Electronic parts catalogue when ordering replacement parts.

WARNING

Accidents can be caused if the driver is distracted by test equipment while road-testing, or if test equipment is not properly secured.

Injuries can be caused if the passenger's airbag is triggered in a collision.

- *The use of test equipment while driving causes distraction.*
- *There is an increased risk of injury if test equipment is not secured.*
- *Move the front passenger's seat back as far as it will go.*
- *Use only the vehicle diagnostic and service information system - VAS 5052- or the diagnostic system - VAS 5053- .*
- *The test equipment -1- must rest flat on the passenger's thighs (as shown in illustration) and must be operated by the passenger.*

5.2 Tools

Special tools and workshop equipment required

- Compact angle grinder - VAS 5167-
- Socket for flow-drill screws - VAS 6426 -
- Pop rivet pliers - VAS 5072-
- Dent remover for aluminium vehicles - VAS 5196-
- Compact booster - VAS 6790-

- Pneumatic glue gun - V.A.G 2005 B-

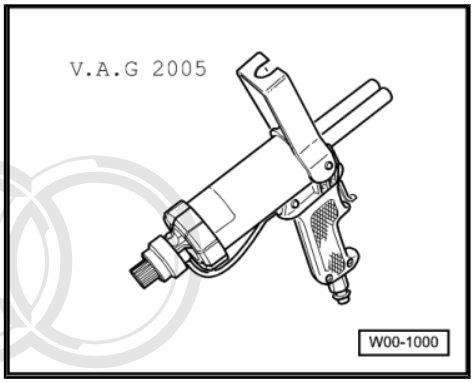

- Rechargeable riveter - VAS 5279 A-

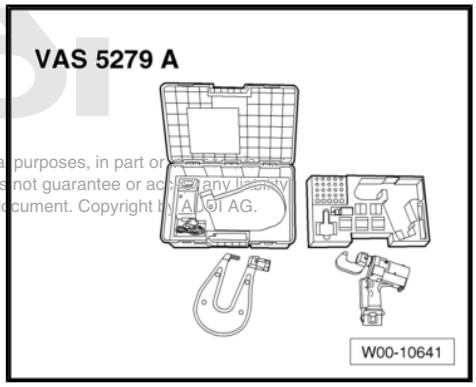

- Shielded arc welding equipment - VAS 6388-

5.3 Procedure

Note

- *The Audi A8 employs flow-drill screws which can be renewed using socket for flow-drill screws - VAS 6426- or -6426/1- .*
- *Repairing joints with flow-drill screws* ⇒ page 4

Cutting locations

- Front longitudinal member (part section) removed ⇒ page 108
- Front longitudinal member removed ⇒ page 84
- Suspension turret removed ⇒ page 59

– Remove flow-drill screws using socket for flow-drill screws - VAS 6426 - and separate joint -a-.

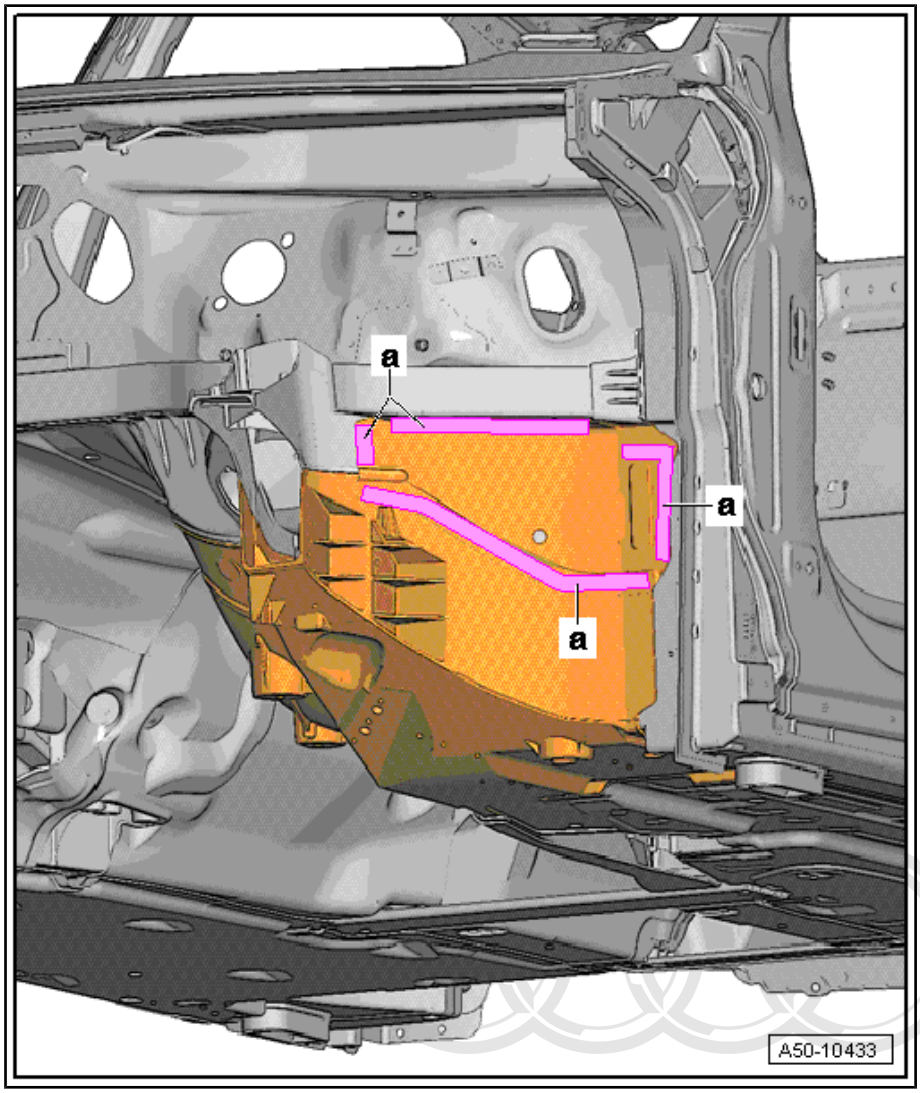

The roof is removed to give a clearer illustration of the repair procedure for the longitudinal member.

– Release inaccessible rivets -a- using dent remover for aluminium vehicles - VAS 5196- .

– Remove flow-drill screws using socket for flow-drill screws - VAS 6426 - and separate joint -b-.

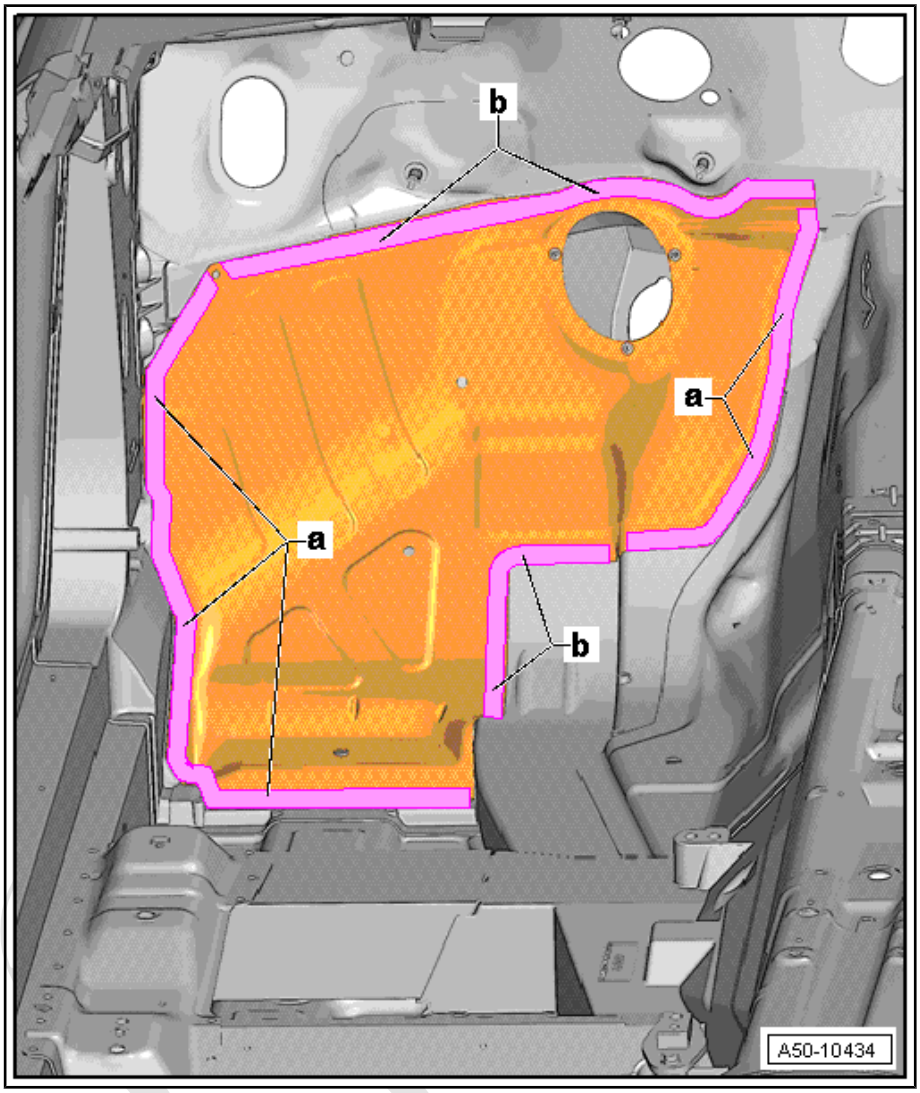

– Separate original joint using compact angle grinder .
– Release inaccessible rivets -a- using dent remover for aluminium vehicles - VAS 5196- .

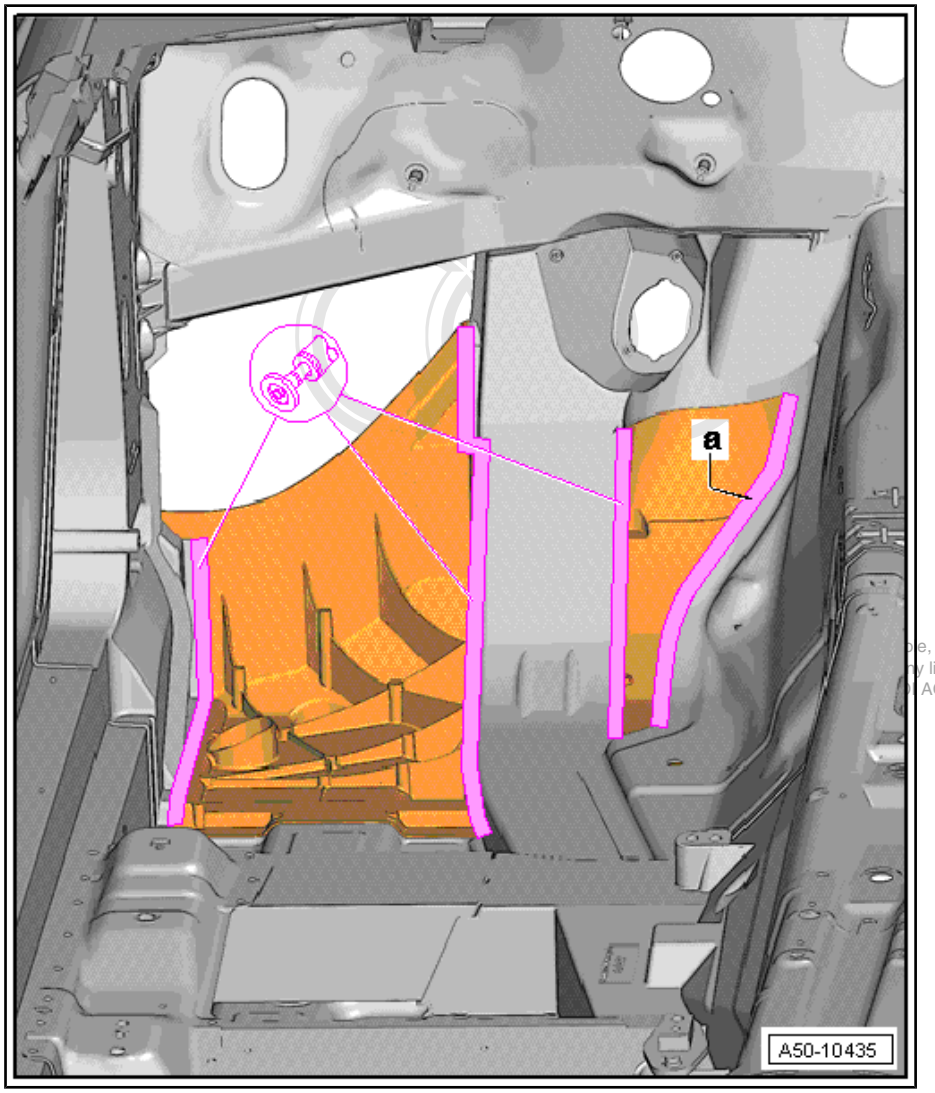

– Remove remaining material using compact angle grinder .

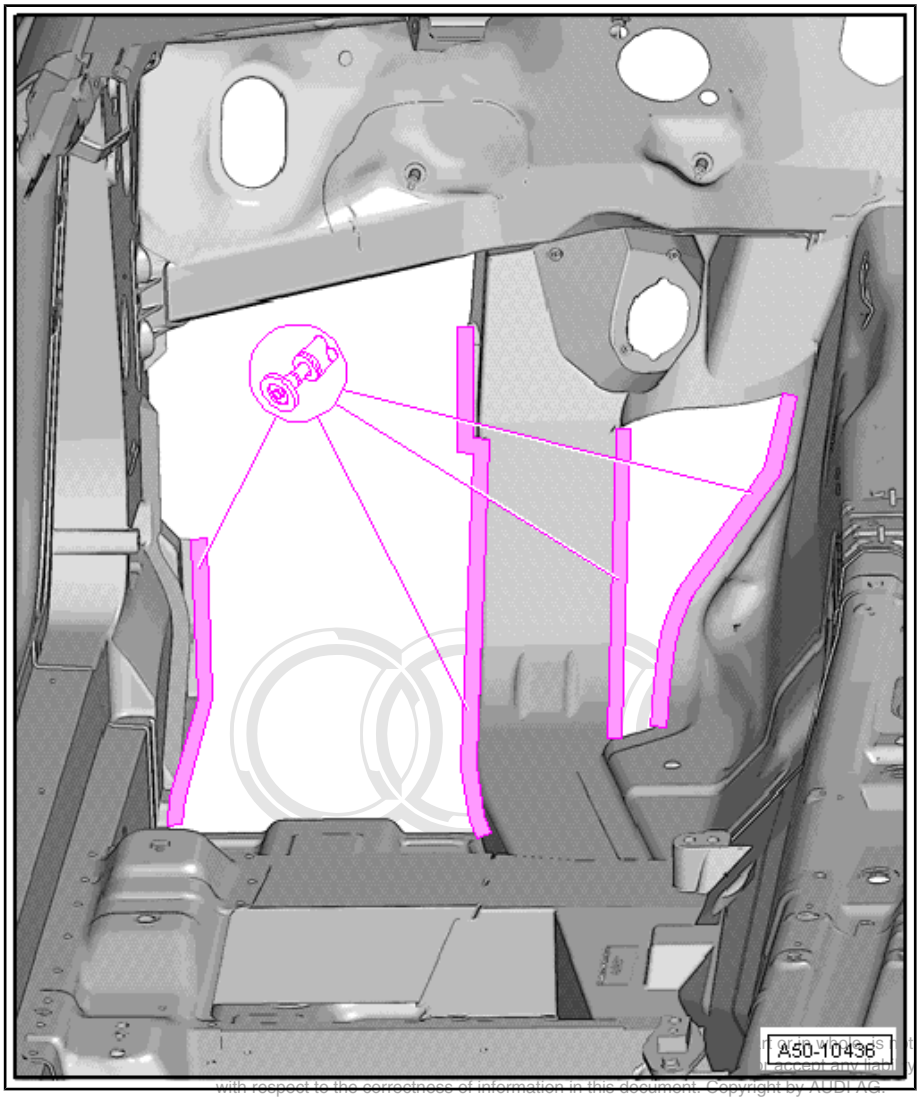

Replacement part

- Front longitudinal member
- Support for front suspension strut mounting
- Punch rivets (self-piercing rivets)

Preparing new part

– Match up new part to body.

– Prepare flanges on body and new parts for welding.

– Fix longitudinal member in position on alignment bracket.

Welding in

– Weld in longitudinal member using shielded arc welding equipment : SG continuous seam (staggered - with gaps).

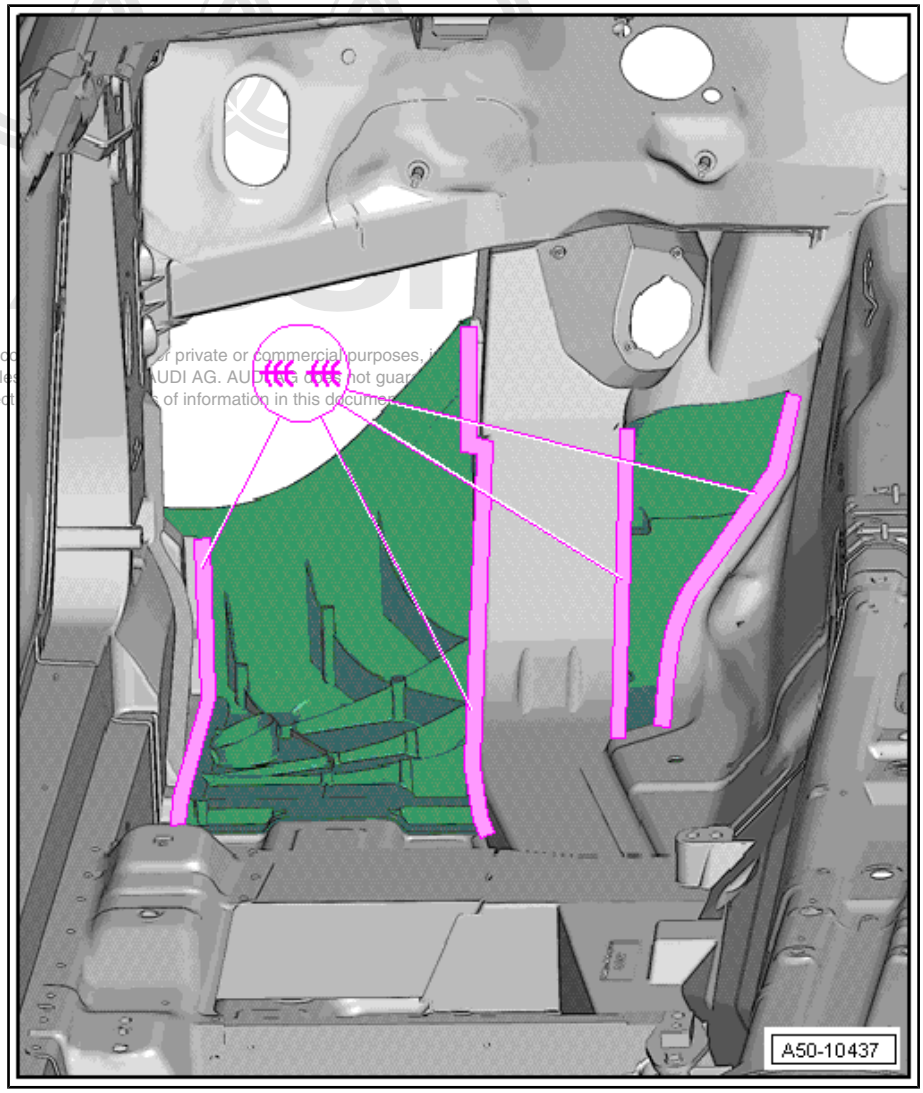

Preparing joints for adhesive application

– Prepare body and floor panel for riveting.

– Clean bonding surfaces with cleaning solution - D 009 401 04- .

– Prepare bonding area with silicate stone - DA 009 800 - and clean.

– Apply aluminium primer - DA 009 801 - to bonding surfaces using applicator - D 009 500 25 - .

Apply 2-component epoxy adhesive - DA 001 730 A2- to entire riveting area using pneumatic glue gun - V.A.G 2005 B- .

Riveting in

– Secure original joints -b- with flow-drill screws using socket for flow-drill screws - VAS 6426 - ⇒ page 4 .

– Rivet in floor panel using pop rivet pliers - VAS 5072- or weld in using shielded arc welding equipment : SG continuous seam (staggered - with gaps).

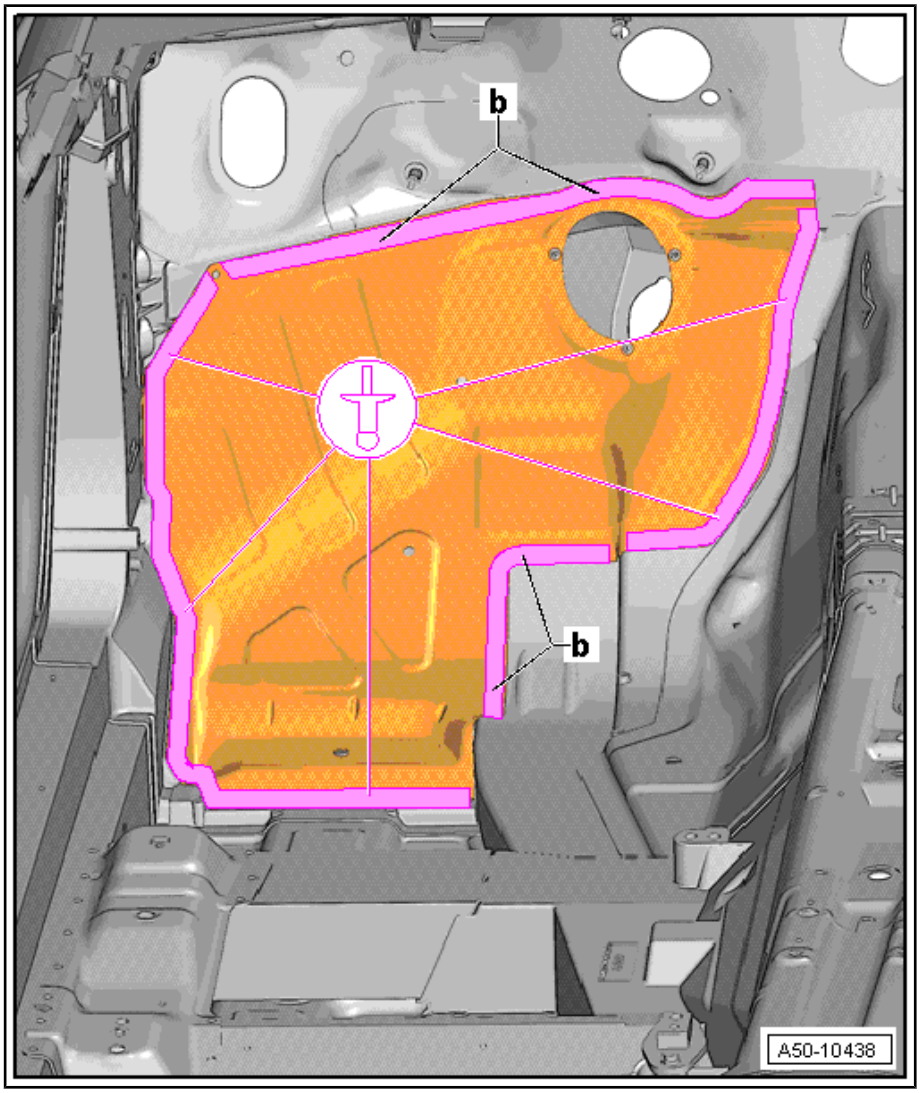

– Secure original joint -a- with flow-drill screws using socket for flow-drill screws - VAS 6426 - ⇒ page 4 .

- Install front longitudinal member (part section) ⇒ page 108 .
- Install front longitudinal member ⇒ page 84 .
- Installing suspension turret ⇒ page 59

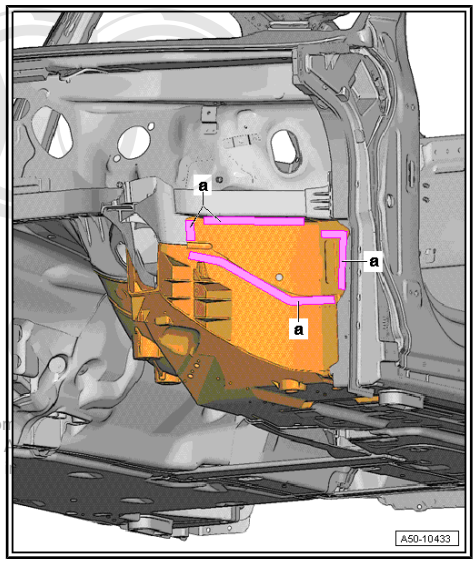

RO: 50 79 55 02

6 Front longitudinal member - Partial renewal

1 - Longitudinal member part section

2 - Fasteners

3 - Longitudinal member

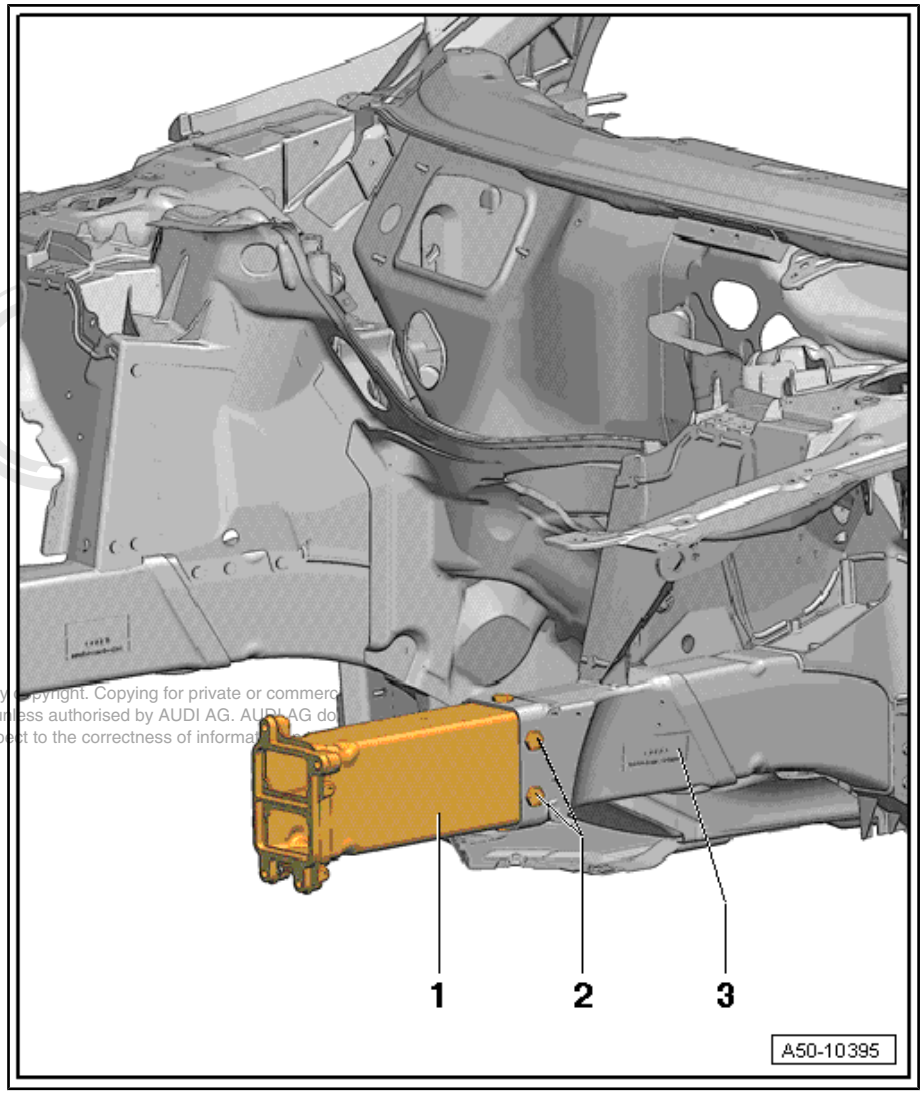

6.1 Notes for vehicles with hybrid drive

WARNING

Safety hazard: the engine can start unexpectedly.

Before carrying out general work on a vehicle with high-voltage electrical system, switch off the ignition and remove the ignition key from the vehicle.

DANGER!

When working on a vehicle with the ignition switched on or while the drive system is active, the engine can start unexpectedly and exhaust fumes can cause a health hazard in closed rooms. Moving parts can trap or draw in parts of the body and/or clothing (safety hazard).

Before switching on the ignition, perform the following steps:

- *Move selector lever to position P*
- *Activate parking brake*
- *Switch off ignition*
- *Open bonnet*
- *Connect battery charger (e.g. - VAS 5095A-) to jump-start connections of 12 V electrical system.*
- *Switch on ignition*

WARNING

Working on vehicles with high-voltage wiring:

- *Do not support yourself or tools on high-voltage wiring or associated components --> this can damage the insulation.*
- *High-voltage wiring must not be excessively bent or kinked --> this can damage the insulation.*
- *The round high-voltage connectors are colour-coded with an external coloured ring and are provided with mechanical coding or guide lugs. It is important to observe this coding when joining up the round high-voltage connectors; otherwise the connectors can be damaged.*

DANGER!

Risk of fatal injury if high-voltage components are damaged.

Observe the following when working in the vicinity of high-voltage components or wiring:

- *It is not permitted to use cutting or forming tools, other sharp-edged tools or heat sources such as welding, brazing, soldering, hot air or thermal bonding equipment.*
- *Before starting work, visually inspect the high-voltage components in the areas involved.*
- *Before working in the engine compartment, visually inspect the power and control electronics for electric drive - JX1- , electric drive motor - V141- , air conditioner compressor - V470- and high-voltage wiring.*
- *Before working on the vehicle underbody, visually inspect the high-voltage wiring and covers.*
- *Before working on the rear section of the vehicle, visually inspect the high-voltage wiring and the hybrid battery unit with the maintenance connector for high-voltage system - TW - .*
- *Visually inspect all potential equalisation lines.*

Check the following when making the visual inspection:

- *There must be no external damage on any component.*
- *The insulation of the high-voltage wiring and potential equalisation lines must not be damaged.*
- *There must be no unusual deformation of the high-voltage wiring.*
- *All high-voltage components must be identified by a red warning sticker.*

DANGER!

High voltage can cause fatal injury.

Danger of severe or fatal injuries from electric shock.

- *The high-voltage system may only be re-energised by a suitably qualified person (Audi high-voltage technician).*
- *The system may only be re-energised using the vehicle diagnostic tester via "Guided Fault Finding".*
- *The vehicle is then made ready for operation again by the qualified person (Audi high-voltage technician).*
- *The qualified person (Audi high-voltage technician) marks the vehicle by attaching the appropriate warning signs.*

DANGER!

High voltage can cause fatal injury.

Danger of severe or fatal injuries from electric shock.

- *The high-voltage system may only be de-energised by a suitably qualified person (Audi high-voltage technician).*
- *It must be definitely confirmed that the high-voltage system is de-energised. The system may only be de-energised using the vehicle diagnostic tester via "Guided Fault Finding".*
- *The qualified person (Audi high-voltage technician) confirms that the system is de-energised and ensures that it cannot be re-energised by fitting the locking cap - T40262- and by storing the ignition key and the maintenance connector for high-voltage system - TW - in a safe place.*
- *The qualified person (Audi high-voltage technician) marks the vehicle by attaching the appropriate warning signs.*

Note

Please refer to the Electronic parts catalogue when ordering replacement parts.

WARNING

Accidents can be caused if the driver is distracted by test equipment while road-testing, or if test equipment is not properly secured.

Injuries can be caused if the passenger's airbag is triggered in a collision.

- *The use of test equipment while driving causes distraction.*
- *There is an increased risk of injury if test equipment is not secured.*
- *Move the front passenger's seat back as far as it will go.*
- *Use only the vehicle diagnostic and service information system - VAS 5052- or the diagnostic system - VAS 5053- .*
- *The test equipment -1- must rest flat on the passenger's thighs (as shown in illustration) and must be operated by the passenger.*

6.2 Tools

Special tools and workshop equipment required

- Interchangeable head - T 40241-

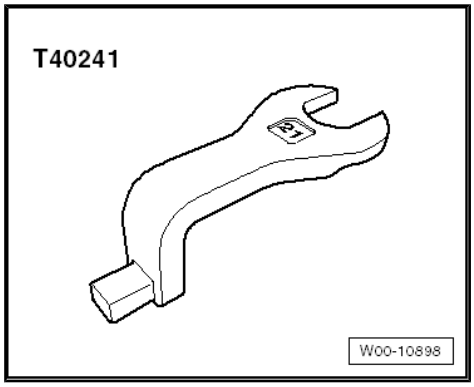

6.3 Procedure

WARNING

Take care not to damage aluminium node castings.

Cutting locations

Note

Separate bolted joint at longitudinal member using interchangeable head - T 40241- ; bottom bolt does not have to be removed completely.

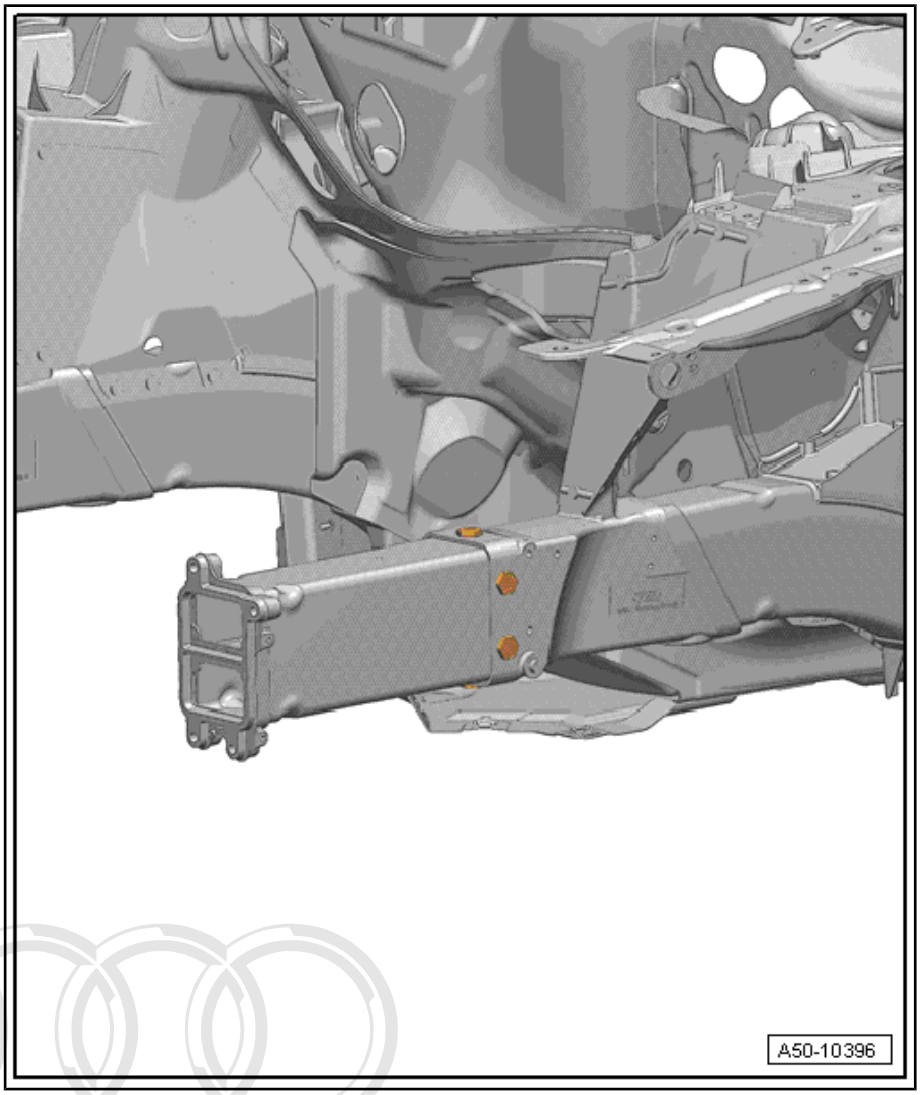

Replacement parts

- Front longitudinal member
- Fasteners
- Securing ring

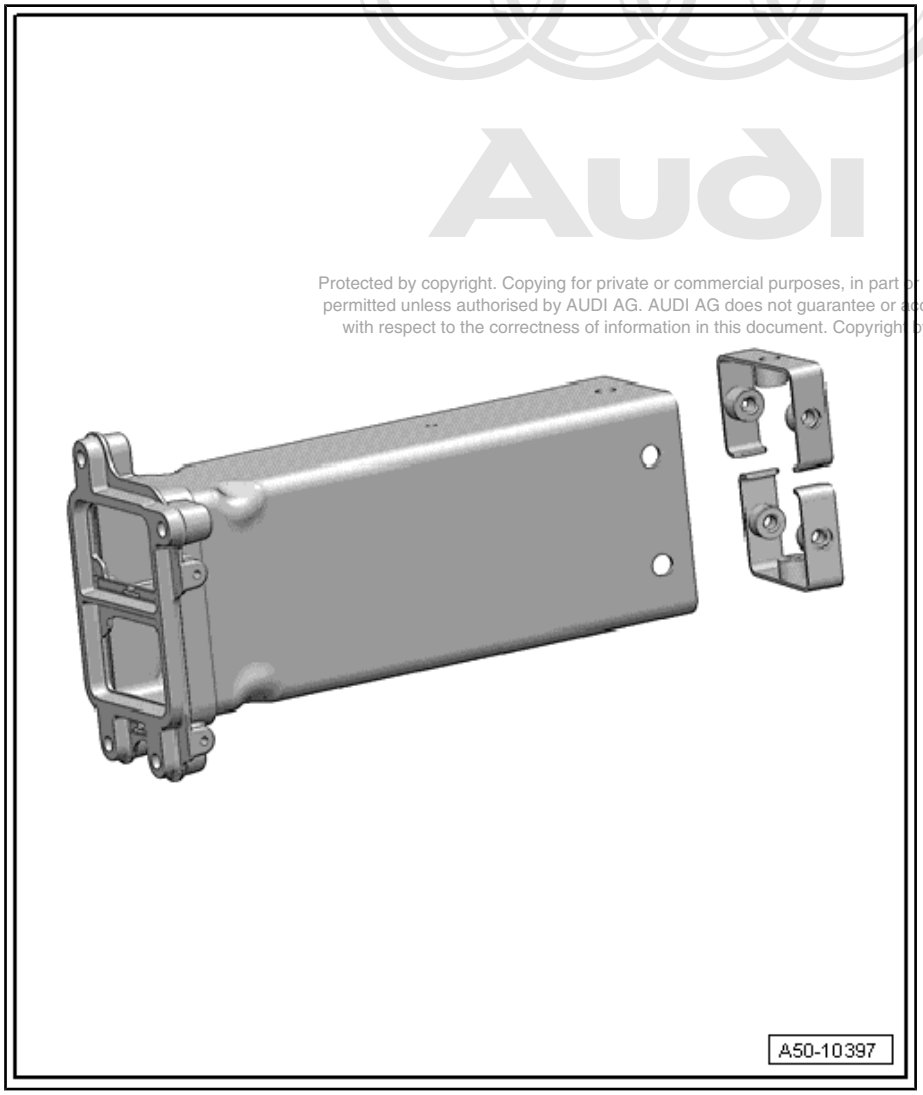

Preparing new parts

Note

- *Align longitudinal member with bolted-on parts.*
- *Fix longitudinal member (part section) in position on alignment bracket.*

Note

Threads must be free of paint and grease.

– Hand-tighten bolts.

– Tighten bolts using interchangeable head - T 40241- (tightening torque 72 Nm).

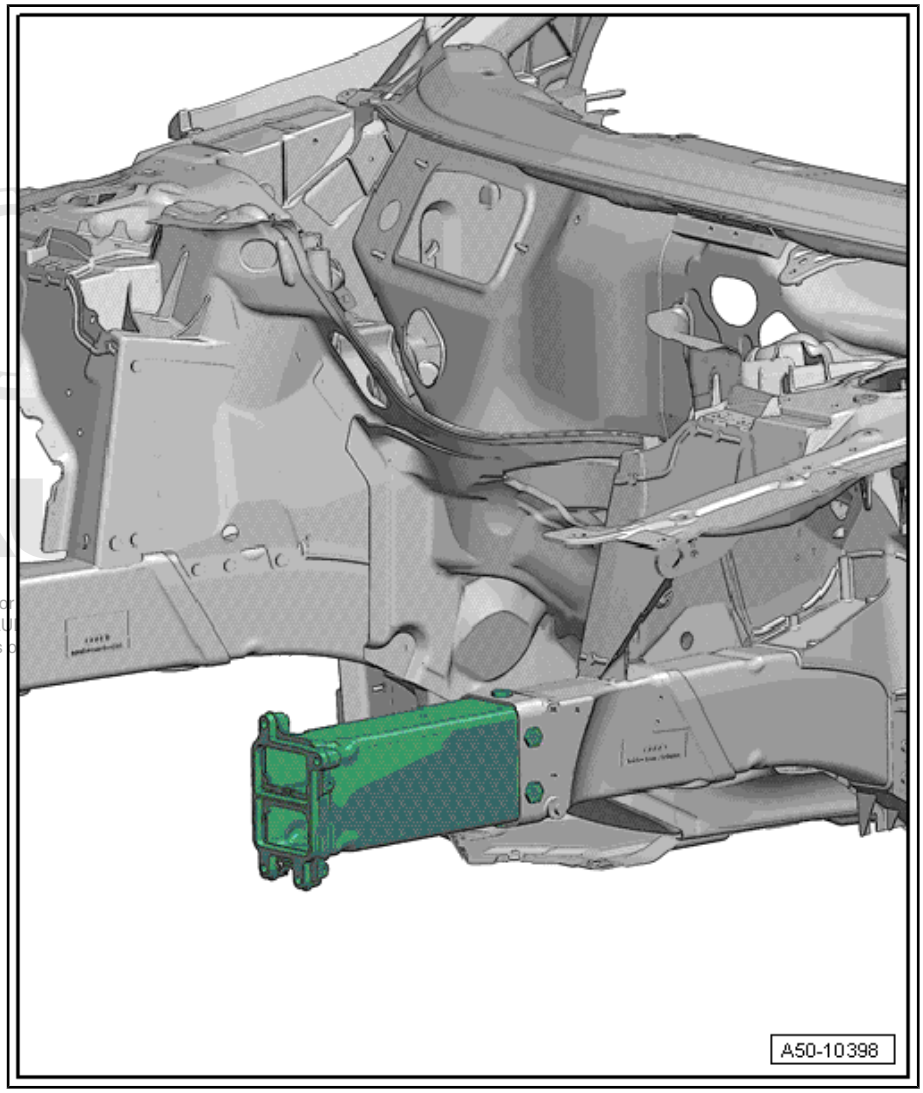

51 – Body - centre

1 Permitted separating cuts on complete side panel

Note

- *Use only welding equipment approved by AUDI AG.*
- *SG continuous weld seams are approved for the separating cuts shown in the illustration.*

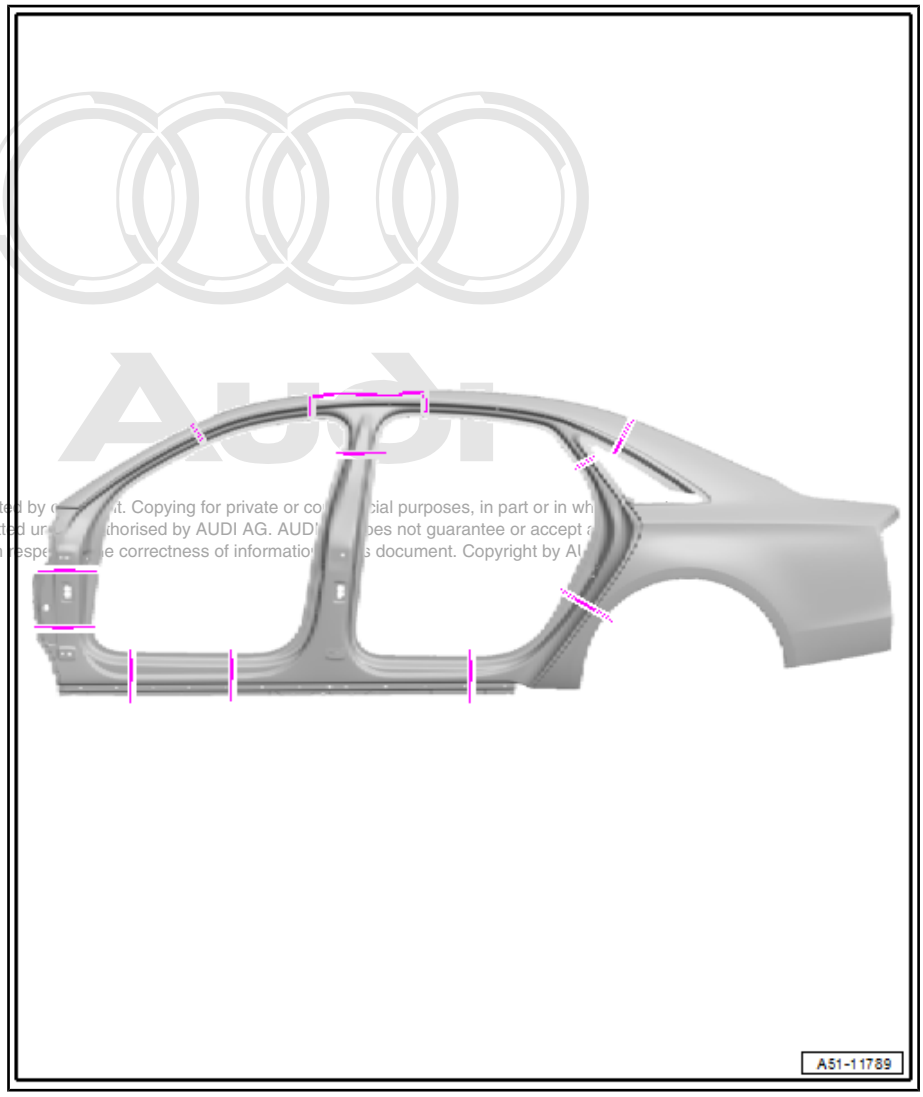

RO: 51 03 55 00

2 Roof - Renewal (normal roof version)

1 - Roof

2 - Laser weld seam

3 - Bonded area

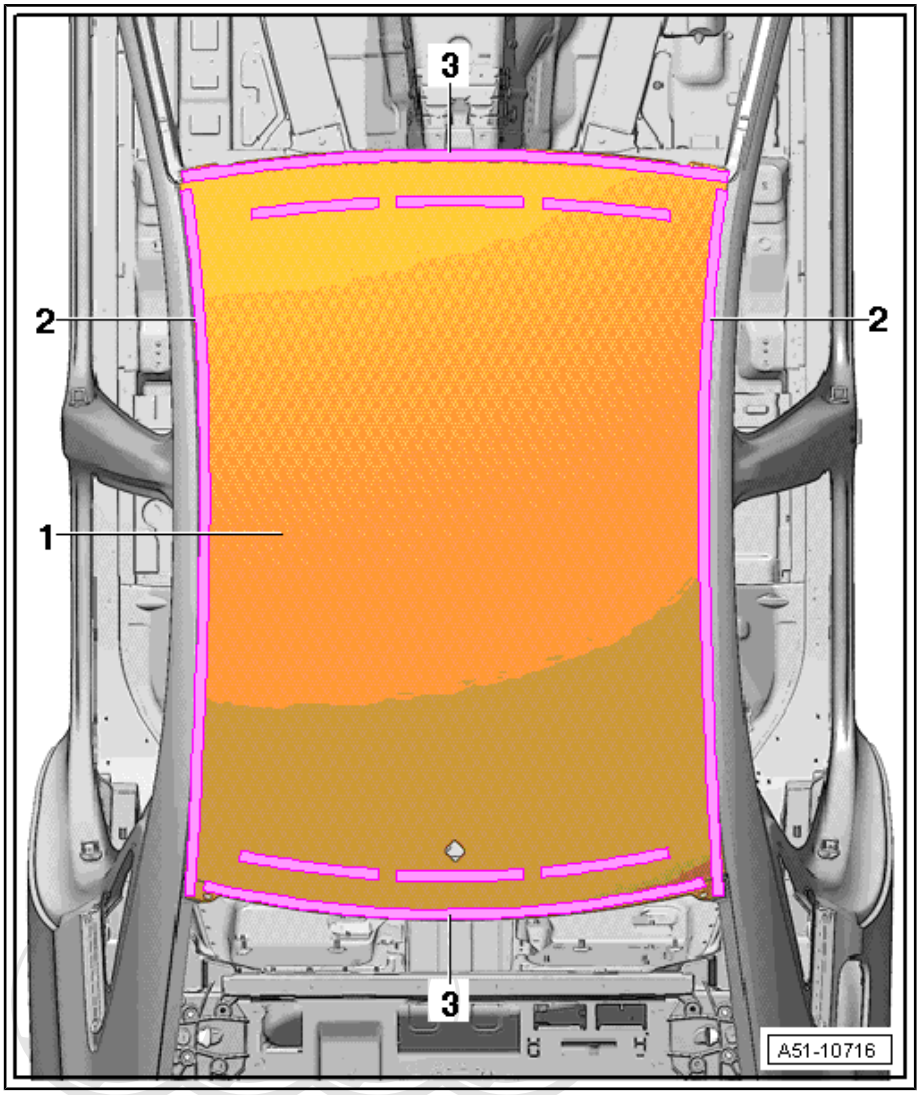

2.1 Notes for vehicles with hybrid drive

WARNING

Safety hazard: the engine can start unexpectedly.

Before carrying out general work on a vehicle with high-voltage electrical system, switch off the ignition and remove the ignition key from the vehicle.

DANGER!

When working on a vehicle with the ignition switched on or while the drive system is active, the engine can start unexpectedly and exhaust fumes can cause a health hazard in closed rooms. Moving parts can trap or draw in parts of the body and/or clothing (safety hazard).

Before switching on the ignition, perform the following steps:

- *Move selector lever to position P*
- *Activate parking brake*
- *Switch off ignition*
- *Open bonnet*
- *Connect battery charger (e.g. - VAS 5095A-) to jump-start connections of 12 V electrical system.*
- *Switch on ignition*

WARNING

Working on vehicles with high-voltage wiring:

- *Do not support yourself or tools on high-voltage wiring or associated components --> this can damage the insulation.*
- *High-voltage wiring must not be excessively bent or kinked --> this can damage the insulation.*
- *The round high-voltage connectors are colour-coded with an external coloured ring and are provided with mechanical coding or guide lugs. It is important to observe this coding when joining up the round high-voltage connectors; otherwise the connectors can be damaged.*

DANGER!

Risk of fatal injury if high-voltage components are damaged.

Observe the following when working in the vicinity of high-voltage components or wiring:

- *It is not permitted to use cutting or forming tools, other sharp-edged tools or heat sources such as welding, brazing, soldering, hot air or thermal bonding equipment.*
- *Before starting work, visually inspect the high-voltage components in the areas involved.*
- *Before working in the engine compartment, visually inspect the power and control electronics for electric drive - JX1- , electric drive motor - V141- , air conditioner compressor - V470- and high-voltage wiring.*
- *Before working on the vehicle underbody, visually inspect the high-voltage wiring and covers.*
- *Before working on the rear section of the vehicle, visually inspect the high-voltage wiring and the hybrid battery unit with the maintenance connector for high-voltage system - TW - .*
- *Visually inspect all potential equalisation lines.*

Check the following when making the visual inspection:

- *There must be no external damage on any component.*
- *The insulation of the high-voltage wiring and potential equalisation lines must not be damaged.*
- *There must be no unusual deformation of the high-voltage wiring.*
- *All high-voltage components must be identified by a red warning sticker.*

DANGER!

High voltage can cause fatal injury.

Danger of severe or fatal injuries from electric shock.

- *The high-voltage system may only be re-energised by a suitably qualified person (Audi high-voltage technician).*
- *The system may only be re-energised using the vehicle diagnostic tester via "Guided Fault Finding".*
- *The vehicle is then made ready for operation again by the qualified person (Audi high-voltage technician).*
- *The qualified person (Audi high-voltage technician) marks the vehicle by attaching the appropriate warning signs.*

DANGER!

High voltage can cause fatal injury.

Danger of severe or fatal injuries from electric shock.

- *The high-voltage system may only be de-energised by a suitably qualified person (Audi high-voltage technician).*
- *It must be definitely confirmed that the high-voltage system is de-energised. The system may only be de-energised using the vehicle diagnostic tester via "Guided Fault Finding".*
- *The qualified person (Audi high-voltage technician) confirms that the system is de-energised and ensures that it cannot be re-energised by fitting the locking cap - T40262- and by storing the ignition key and the maintenance connector for high-voltage system - TW - in a safe place.*
- *The qualified person (Audi high-voltage technician) marks the vehicle by attaching the appropriate warning signs.*

Note

Please refer to the Electronic parts catalogue when ordering replacement parts.

WARNING

Accidents can be caused if the driver is distracted by test equipment while road-testing, or if test equipment is not properly secured.

Injuries can be caused if the passenger's airbag is triggered in a collision.

- *The use of test equipment while driving causes distraction.*
- *There is an increased risk of injury if test equipment is not secured.*
- *Move the front passenger's seat back as far as it will go.*
- *Use only the vehicle diagnostic and service information system - VAS 5052- or the diagnostic system - VAS 5053- .*
- *The test equipment -1- must rest flat on the passenger's thighs (as shown in illustration) and must be operated by the passenger.*

2.2 Tools

Special tools and workshop equipment required

- Compact angle grinder - VAS 5167-
- Scraper - VAS 5448-
- Tin snips - VAS 5357-
- Compact booster - VAS 6790-

- Electric cutter - V.A.G 1561 A-

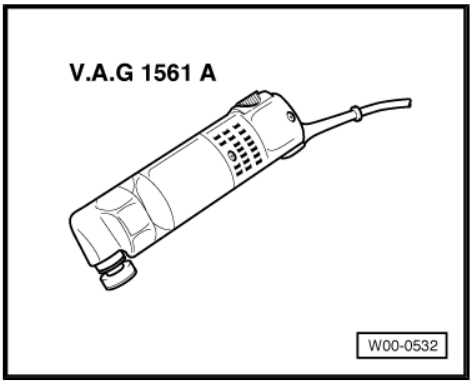

- Pneumatic cartridge gun - V.A.G 1761/1-

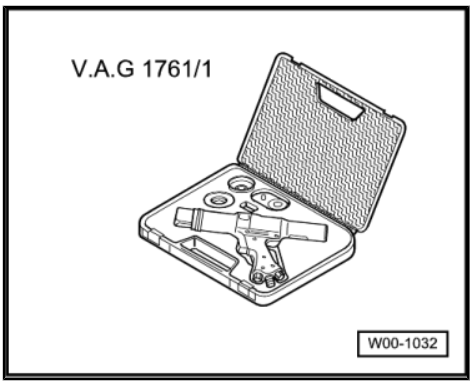

- Rechargeable riveter - VAS 5279 A-

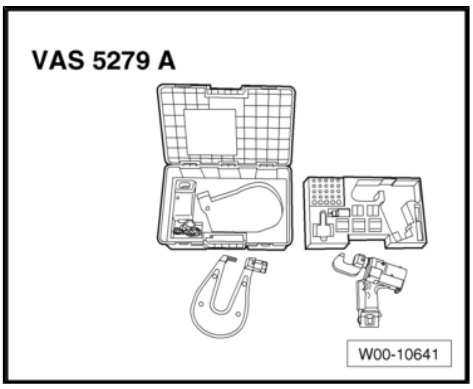

- Double cartridge gun - VAS 6453-
- Pneumatic jig-saw - VAS 5108 - or body saw - VAS 6598 - or -VAS 6780-

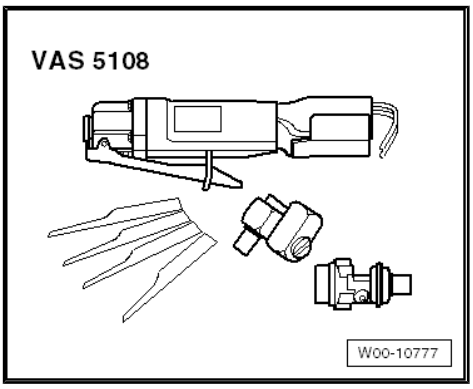

- Mole grips, 18-18 - VAS 5430/1- , 4x
- Suction lifter - V.A.G 1344 -

- Tensioning strap - T 10038-

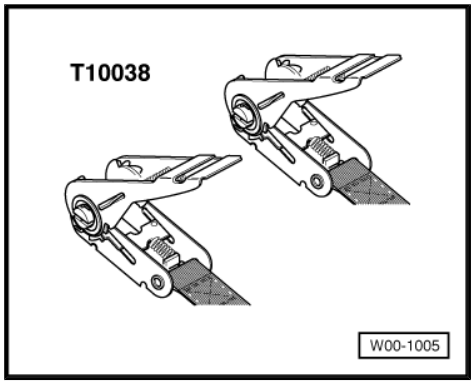

2.3 Procedure

Cutting locations

Note

- *Mask the roof side members with adhesive tape to protect them from damage and dirt.*
- *Take care not to damage roof cross members (front and rear) when cutting.*

– Roughly cut out roof parallel with laser weld seam -1- at a distance of approx. 50 mm using body saw .

– Separate original joint at front and rear roof frame using rechargeable riveter - VAS 5279 A- or compact booster - VAS 6790- . For attachments see ⇒ page 15 .

– Working from passenger compartment, separate bonded joints between roof and roof cross members using electric cutter - V.A.G 1561 A- .

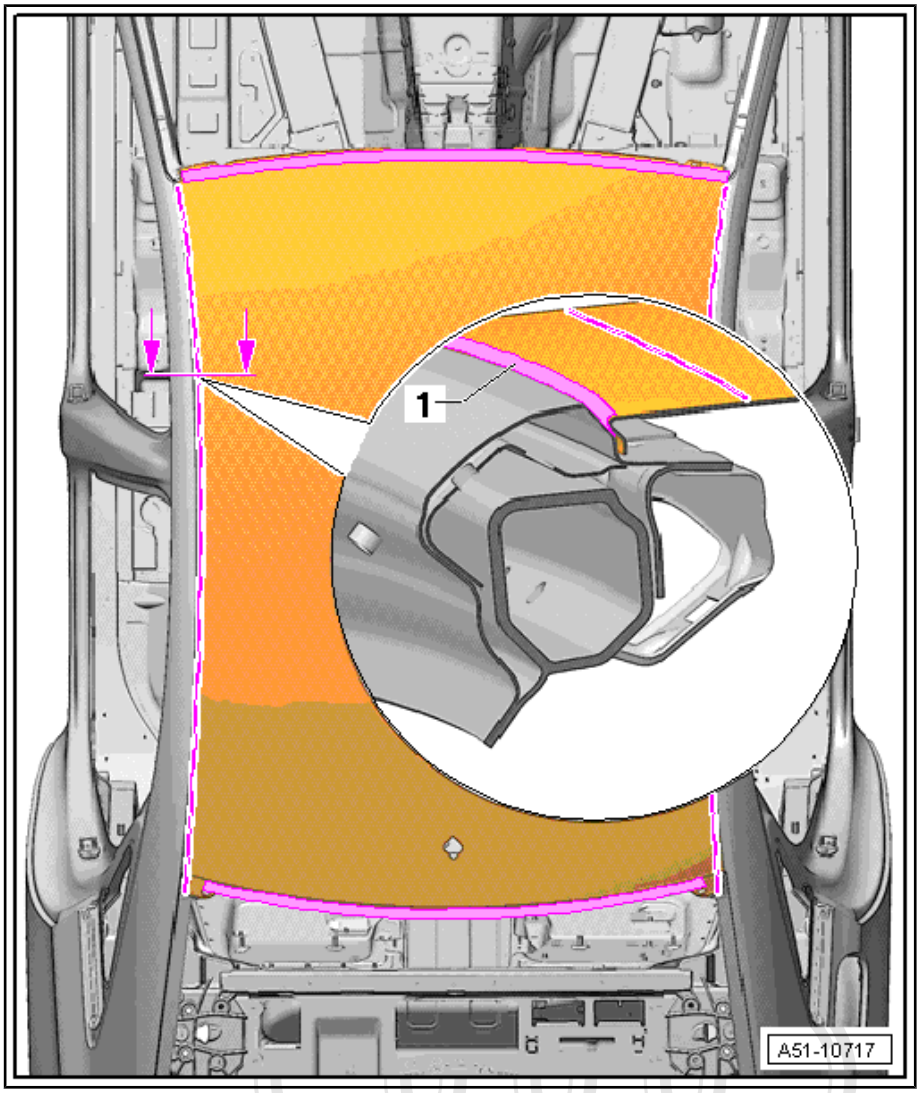

Note

Take care not to damage the roof side members when making cuts and when moving the remaining sections of the roof up and down.

– Make cuts in remaining sections of roof using tin snips - VAS 5357- .

– Take hold of remaining sections with pliers and break open laser weld seam by pulling up and down.

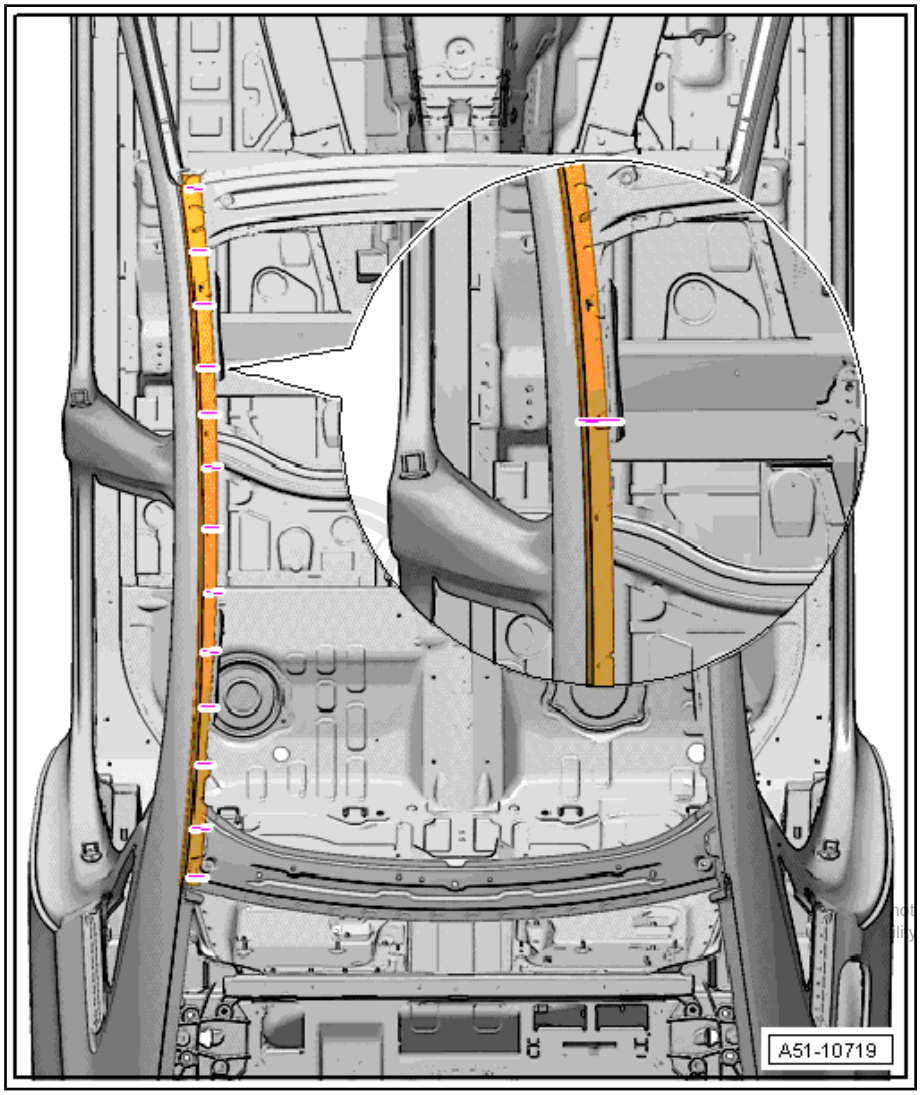

Note

- *Take care not to damage the roof side members -1- when removing the remaining sections of the roof -2-.*
- *Use a suitable flap disc; do not use a cutting disc or rough-filing disc.*

– Remove remaining sections -2- using compact angle grinder .

– Remove all residual adhesive and sealing compound from roof cross members at front and rear using scraper - VAS 5448- .

– Grind bonding areas down to bare metal.

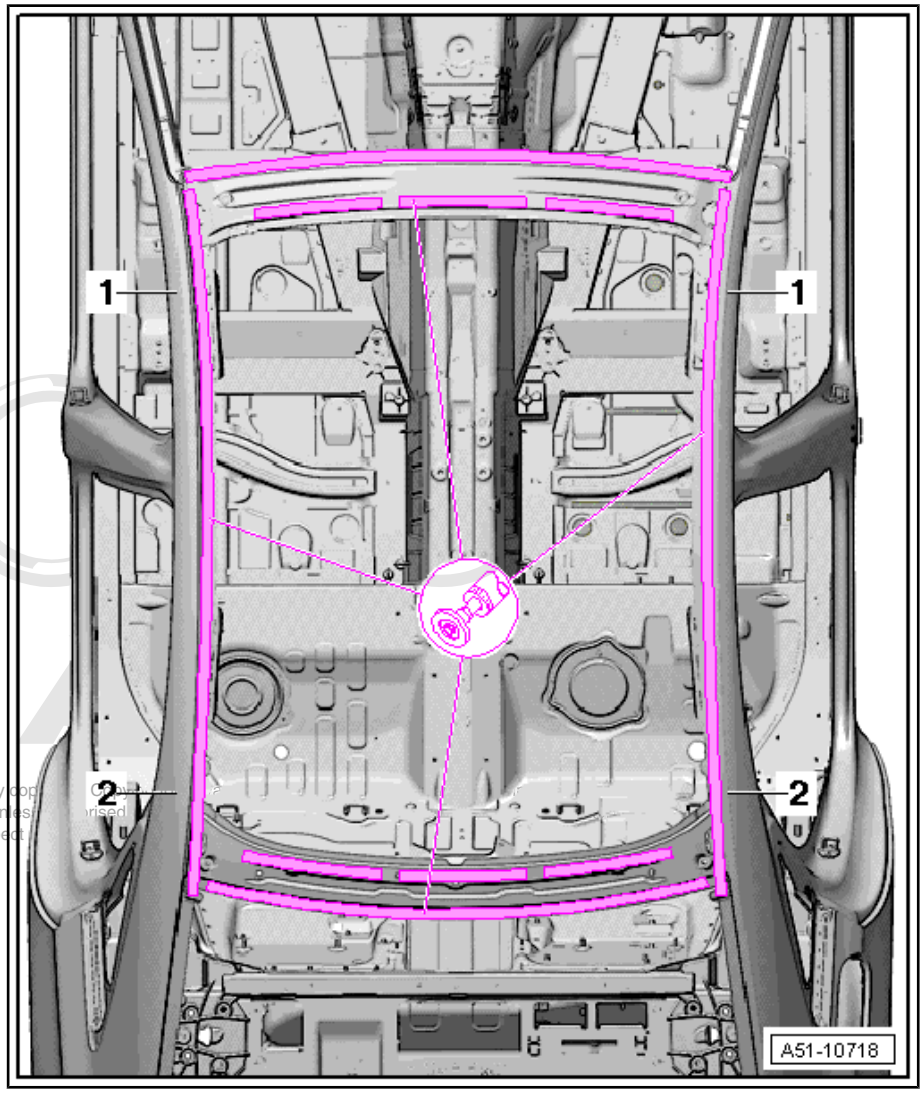

– Press out punch rivets for additional joint with sold rivets.

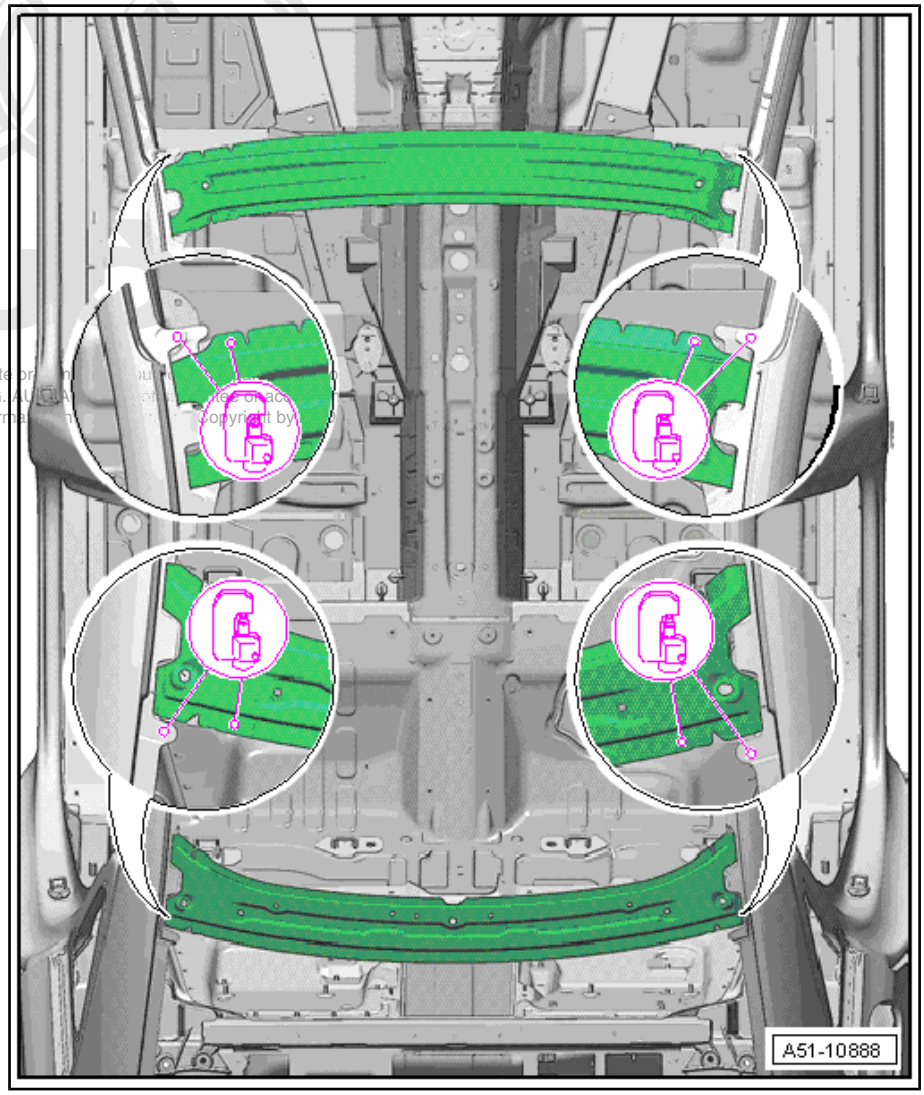

Replacement parts

- Roof
- Retaining bracket , 8x
- Single-component assembly adhesive - D 190 MKD A3-
- 2x 2-component epoxy adhesive - DA 180 A00 A2 -
- Cleaning solution - D 009 401 04-
- Punch rivet
- 8x solid rivet - N 107 440 01-

Note

The retaining brackets can be moved by ± 10 mm in the longitudinal direction. This is intended to avoid drilling through any rivets on the roof frame. Drilling through rivets would reduce the strength of the body.

– Position retaining brackets on roof frame in line with dimensions -a-, -b- and -c- and slide right up against side panel.

– Fit retaining brackets in position.

– Mark drill holes. Then detach retaining brackets and centre punch drill holes.

– Using drill , drill 7 mm ∅ holes from above in roof frame.
– Deburr drill holes.

Dimension -a- = 180 mm

Dimension -b- = 335 mm

Dimension -c- = 375 mm

Fit retaining bracket -d- on lug in front of rear roof cross member.

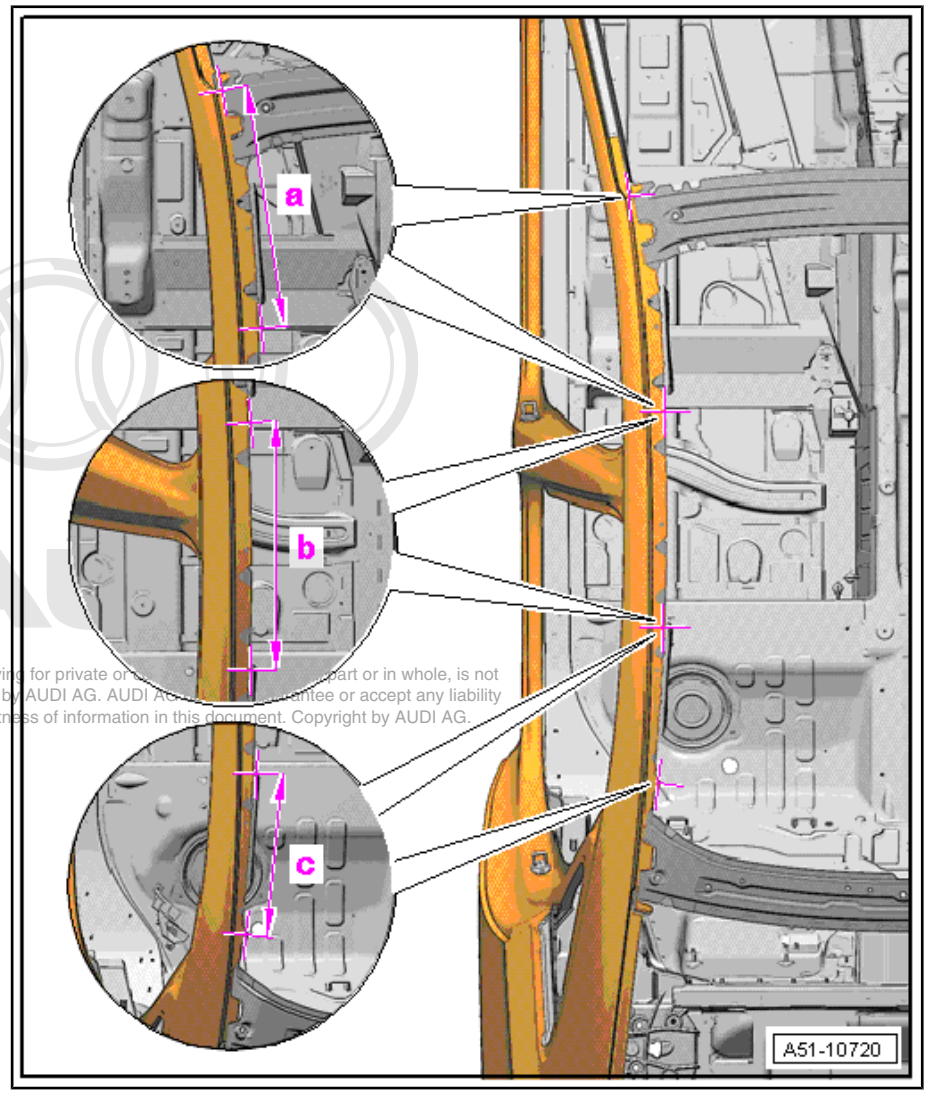

Preparing new part

Note

- *It is essential to observe the following sequence of operations to ensure satisfactory and effective roof repair.*
- *Bonded areas must not be treated with filler coat (surfacer) and painted before bonding in the roof.*
- *The adhesive materials must be applied very quickly.*
- *Make sure adhesive is applied before pot life is exceeded.*
- *Use a pneumatic cartridge gun to apply the bonding materials.*
- *Affixing adhesive tape to the roof parallel with the bonded seam on the side prevents soiling when bonding.*

Preparing joints for adhesive application

– Prepare roof for riveting.

– Prepare body for riveting.

– Clean bonding surfaces with cleaning solution - D 009 401 04- .

– Prepare bonding area with silicate stone - DA 009 800 - and clean.

– Apply aluminium primer - DA 009 801 - to bonding surfaces using applicator - D 009 500 25 - .

Apply 2-component epoxy adhesive - DA 180 A00 A2- to entire riveting area using double cartridge gun - VAS 6453- .

Bonding in

Match up roof and fix in place.

– Apply single-component assembly adhesive - D 190 MKD A3- with pneumatic cartridge gun - V.A.G 1761/1- to rear roof cross member in the area of the factory bonding location.

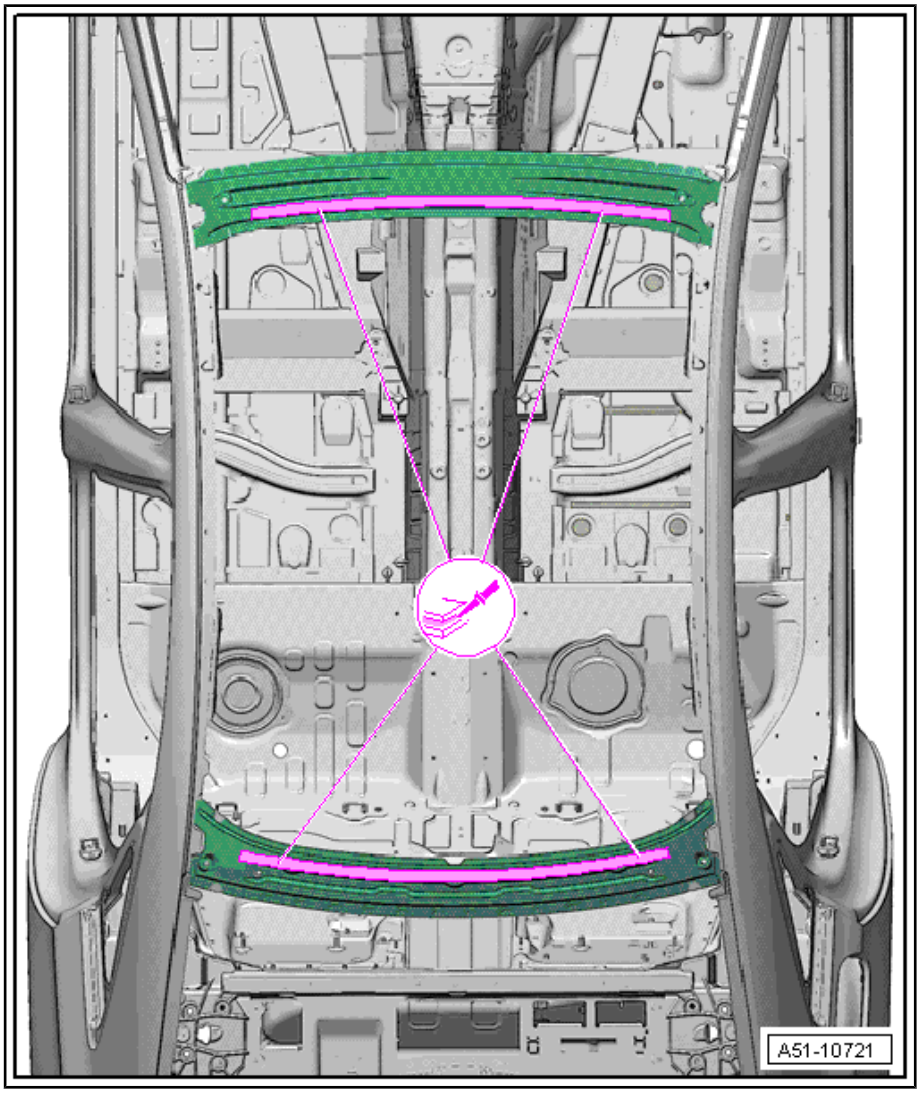

– Cut static mixer from 2-component epoxy adhesive - DA 180 A00 A2- down to 4th notch to obtain required bead cross-section.

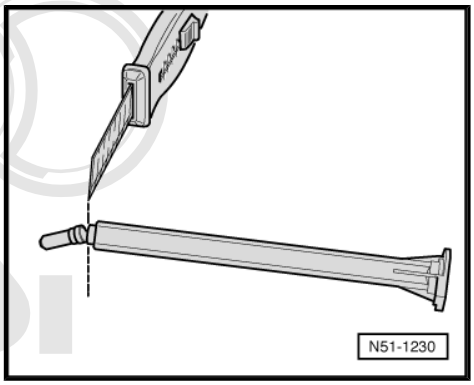

Note

- *The pot life of the 2-component epoxy adhesive - DA 180 A00 A2- is roughly 90 minutes.*
- *A second mechanic is required for the next steps.*

– Operate double cartridge gun - VAS 6453- with 2-component epoxy adhesive - DA 180 A00 A2- and apply a roughly 100 mm long bead of adhesive to a piece of cardboard before starting application on the vehicle.

– Apply a continuous bead of 2-component epoxy adhesive - DA 180 A00 A2- to roof using double cartridge gun - VAS 6453- .

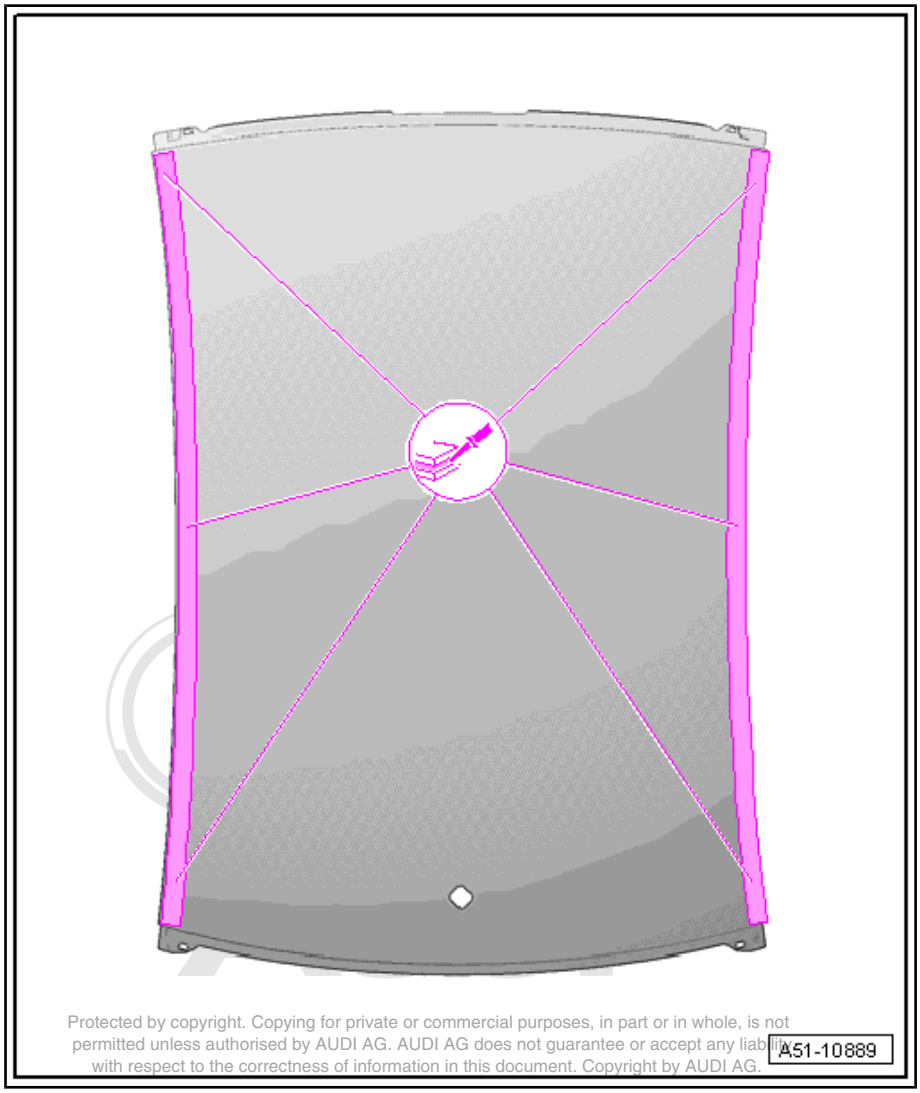

- Apply 2-component epoxy adhesive - DA 180 A00 A2 - to entire riveting area using double cartridge gun - VAS 6453- .
- Apply two continuous beads -1- of 2-component epoxy adhesive - DA 180 A00 A2 - to bevelled sections of roof side members in area of zero-gap joint using double cartridge gun - VAS 6453- .
- Apply one continuous bead -2- of 2-component epoxy adhesive - DA 180 A00 A2 - to roof side members and roof cross members over entire contact area of roof reinforcement using double cartridge gun - VAS 6453- .

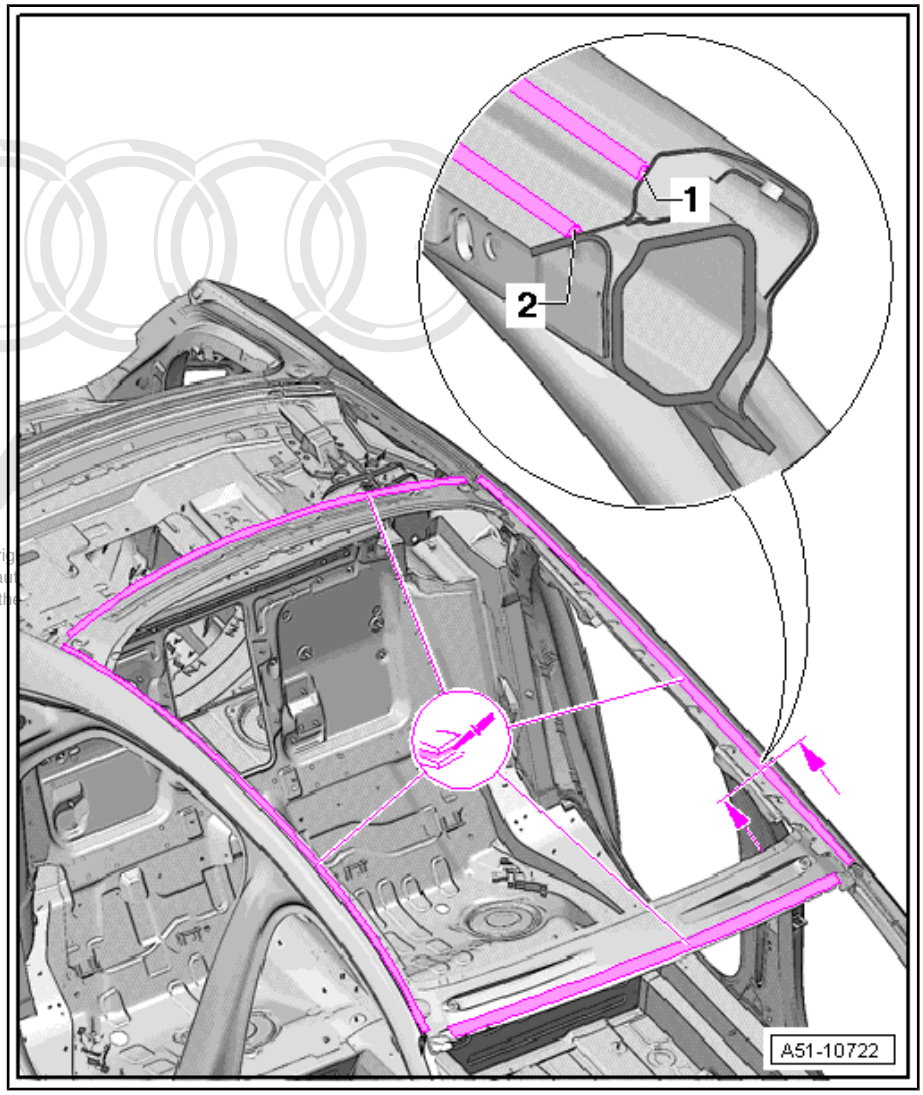

- Immediately fit and align roof.
- Fix roof in position at windscreen flange and sealing flange for rear window.
- Fix roof in position at windscreen opening and rear window opening using mole grips, 18-18 - VAS 5430/1- .

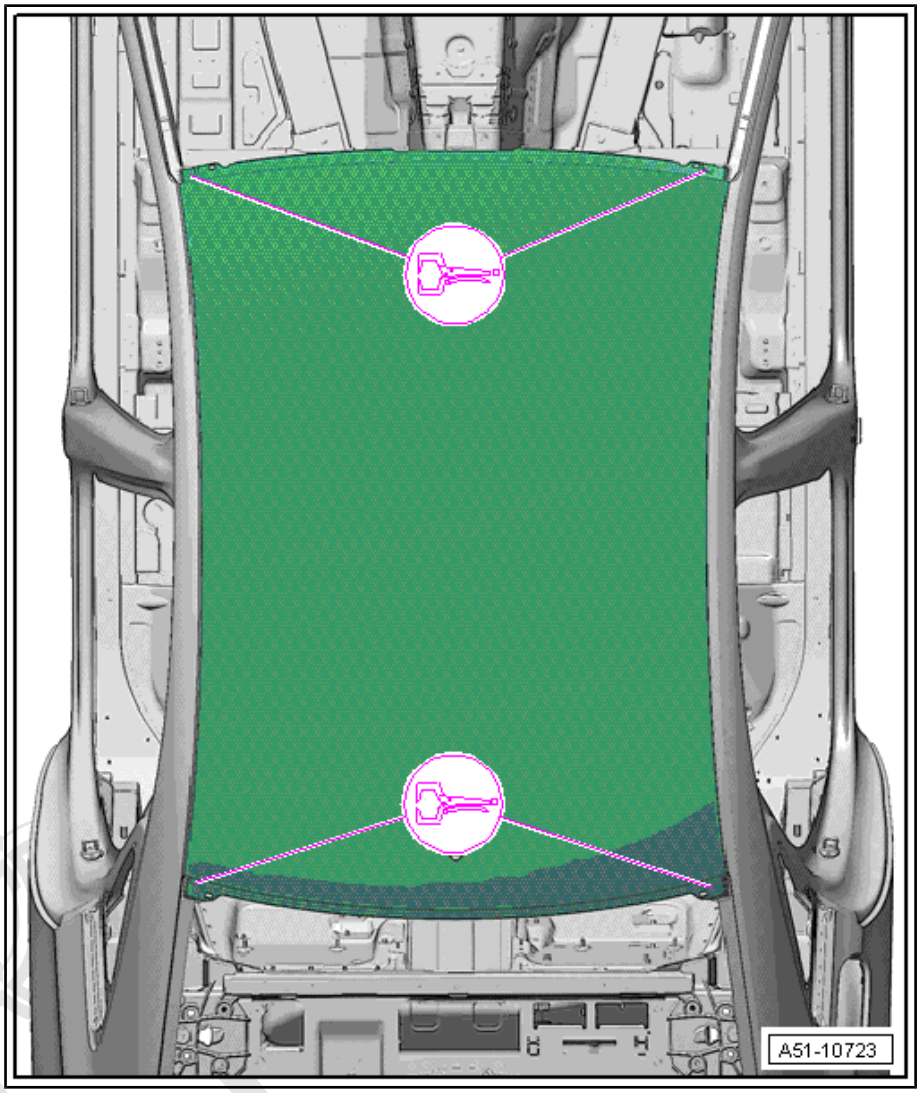

- Apply a continuous bead of 2-component epoxy adhesive - DA 180 A00 A2 - all round onto retaining brackets using double cartridge gun - VAS 6453- .
- Fix retaining brackets in position.
- Fit retaining brackets on roof frame and bolt on.

Note

The quantity of adhesive is sufficient when the adhesive comes out at the retaining brackets.

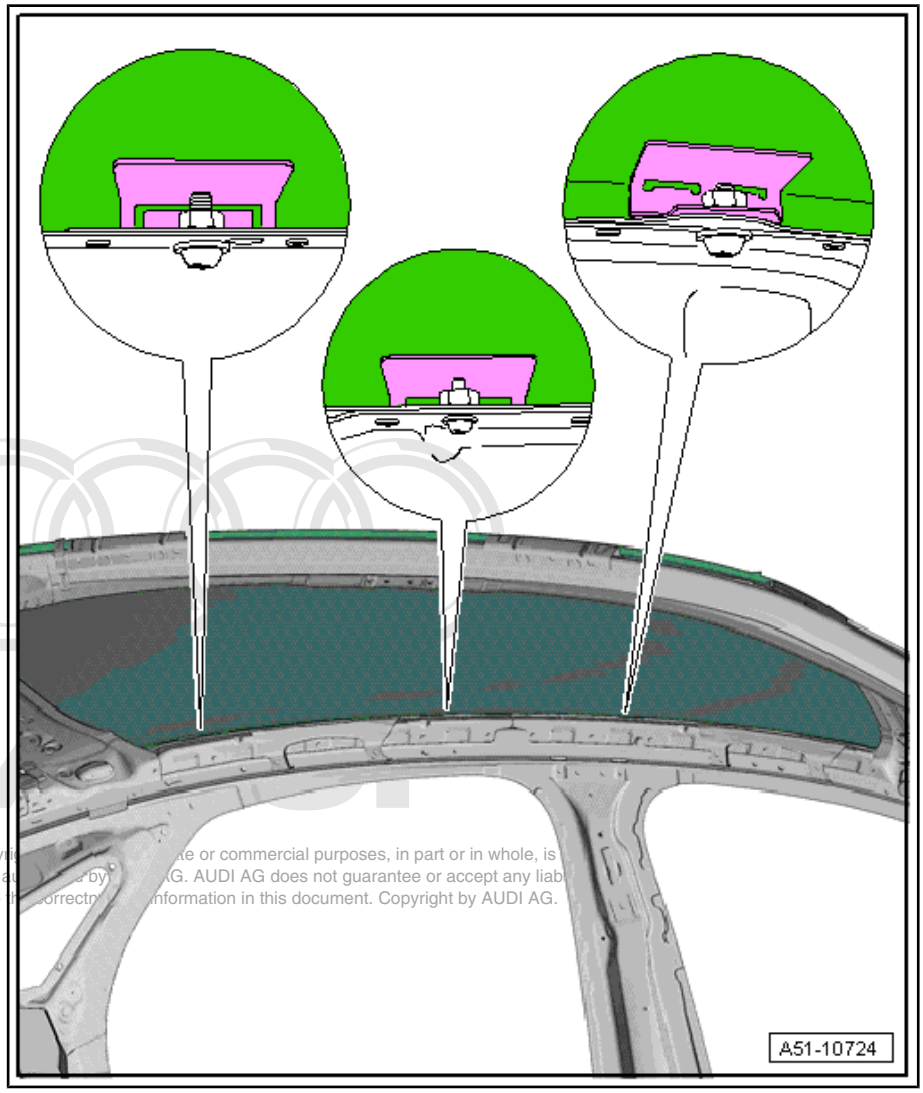

– Additionally fix roof in position with 2 tensioning straps - T 10038- .

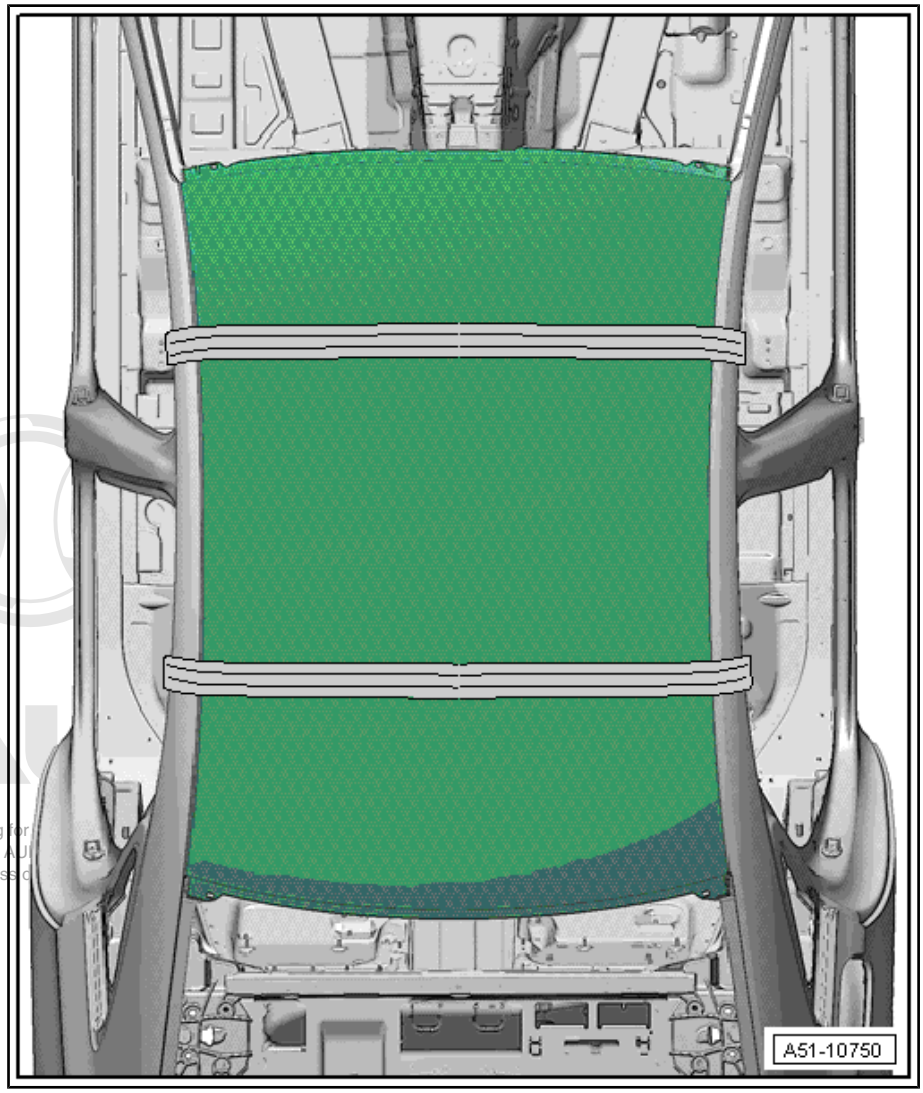

Riveting in

– Rivet in roof using rechargeable riveter - VAS 5279 A- or compact booster - VAS 6790 - . For attachments see ⇒ page 15 .

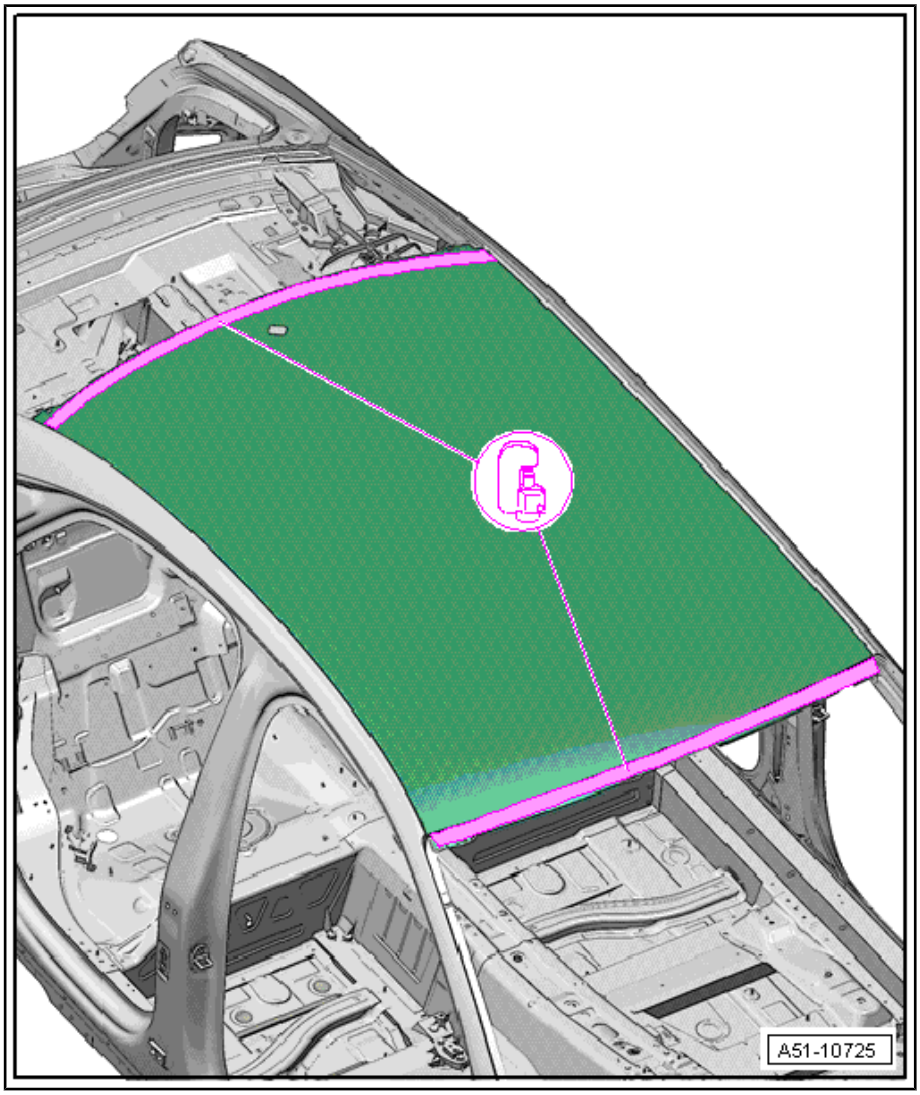

- In addition to the punch rivets on the front and rear roof frame, two 6 x 10 mm solid rivets must be set at the roof corners for safety reasons (crash resistance); use rechargeable riveter - VAS 5279A- or compact booster - VAS 6790- . For attachments see ⇒ page 15 .
- Punch holes using attachment ⇒ page 15 .
- Set solid rivets using attachment ⇒ page 15 .

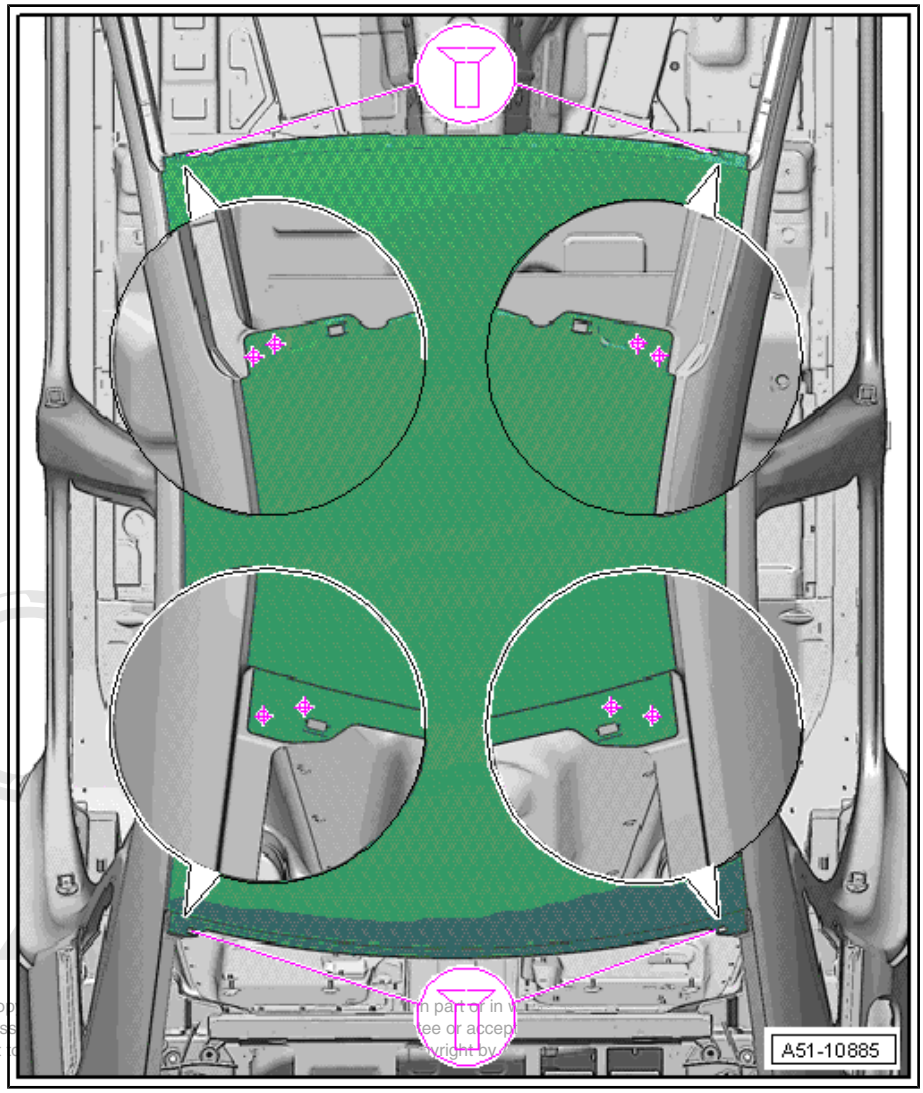

RO: 51 03 55 00

3 Roof (long version, 130 mm longer) - Renewal

1 - Roof

2 - Laser weld seam

3 - Bonded area

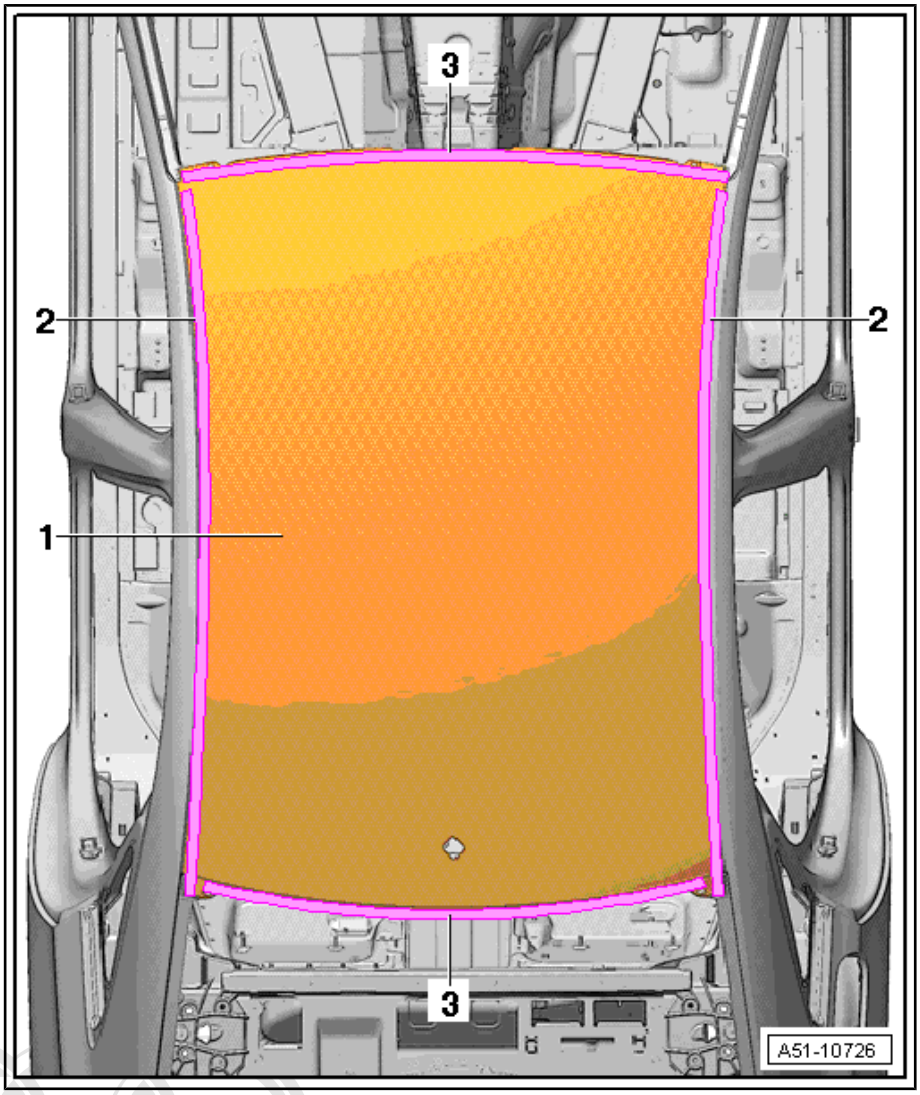

3.1 Notes for vehicles with hybrid drive

WARNING

Safety hazard: the engine can start unexpectedly.

Before carrying out general work on a vehicle with high-voltage electrical system, switch off the ignition and remove the ignition key from the vehicle.

DANGER!

When working on a vehicle with the ignition switched on or while the drive system is active, the engine can start unexpectedly and exhaust fumes can cause a health hazard in closed rooms. Moving parts can trap or draw in parts of the body and/or clothing (safety hazard).

Before switching on the ignition, perform the following steps:

- *Move selector lever to position P*
- *Activate parking brake*
- *Switch off ignition*
- *Open bonnet*
- *Connect battery charger (e.g. - VAS 5095A-) to jump-start connections of 12 V electrical system.*
- *Switch on ignition*

WARNING

Working on vehicles with high-voltage wiring:

- *Do not support yourself or tools on high-voltage wiring or associated components --> this can damage the insulation.*
- *High-voltage wiring must not be excessively bent or kinked --> this can damage the insulation.*
- *The round high-voltage connectors are colour-coded with an external coloured ring and are provided with mechanical coding or guide lugs. It is important to observe this coding when joining up the round high-voltage connectors; otherwise the connectors can be damaged.*

DANGER!

Risk of fatal injury if high-voltage components are damaged.

Observe the following when working in the vicinity of high-voltage components or wiring:

- *It is not permitted to use cutting or forming tools, other sharp-edged tools or heat sources such as welding, brazing, soldering, hot air or thermal bonding equipment.*
- *Before starting work, visually inspect the high-voltage components in the areas involved.*
- *Before working in the engine compartment, visually inspect the power and control electronics for electric drive - JX1- , electric drive motor - V141- , air conditioner compressor - V470- and high-voltage wiring.*
- *Before working on the vehicle underbody, visually inspect the high-voltage wiring and covers.*
- *Before working on the rear section of the vehicle, visually inspect the high-voltage wiring and the hybrid battery unit with the maintenance connector for high-voltage system - TW - .*
- *Visually inspect all potential equalisation lines.*

Check the following when making the visual inspection:

- *There must be no external damage on any component.*
- *The insulation of the high-voltage wiring and potential equalisation lines must not be damaged.*
- *There must be no unusual deformation of the high-voltage wiring.*
- *All high-voltage components must be identified by a red warning sticker.*

DANGER!

High voltage can cause fatal injury.

Danger of severe or fatal injuries from electric shock.

- *The high-voltage system may only be re-energised by a suitably qualified person (Audi high-voltage technician).*
- *The system may only be re-energised using the vehicle diagnostic tester via "Guided Fault Finding".*
- *The vehicle is then made ready for operation again by the qualified person (Audi high-voltage technician).*
- *The qualified person (Audi high-voltage technician) marks the vehicle by attaching the appropriate warning signs.*

DANGER!

High voltage can cause fatal injury.

Danger of severe or fatal injuries from electric shock.

- *The high-voltage system may only be de-energised by a suitably qualified person (Audi high-voltage technician).*
- *It must be definitely confirmed that the high-voltage system is de-energised. The system may only be de-energised using the vehicle diagnostic tester via "Guided Fault Finding".*
- *The qualified person (Audi high-voltage technician) confirms that the system is de-energised and ensures that it cannot be re-energised by fitting the locking cap - T40262- and by storing the ignition key and the maintenance connector for high-voltage system - TW - in a safe place.*
- *The qualified person (Audi high-voltage technician) marks the vehicle by attaching the appropriate warning signs.*

Note

Please refer to the Electronic parts catalogue when ordering replacement parts.

WARNING

Accidents can be caused if the driver is distracted by test equipment while road-testing, or if test equipment is not properly secured.

Injuries can be caused if the passenger's airbag is triggered in a collision.

- *The use of test equipment while driving causes distraction.*
- *There is an increased risk of injury if test equipment is not secured.*
- *Move the front passenger's seat back as far as it will go.*
- *Use only the vehicle diagnostic and service information system - VAS 5052- or the diagnostic system - VAS 5053- .*
- *The test equipment -1- must rest flat on the passenger's thighs (as shown in illustration) and must be operated by the passenger.*

3.2 Tools

Special tools and workshop equipment required

- Compact angle grinder - VAS 5167-
- Scraper - VAS 5448-
- Tin snips - VAS 5357-
- Compact booster - VAS 6790-

- Pneumatic glue gun - V.A.G 2005 B-

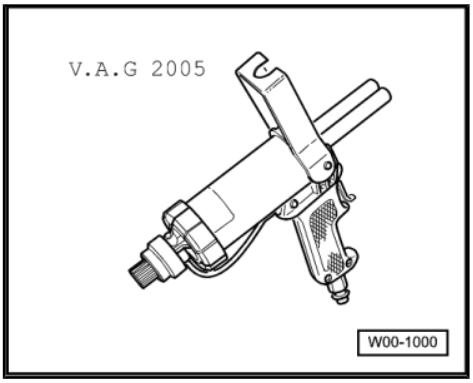

- Electric cutter - V.A.G 1561 A-

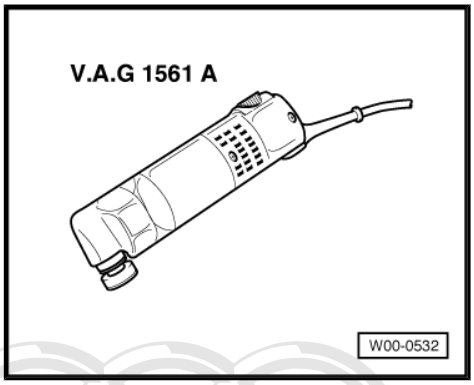

- Pneumatic cartridge gun - V.A.G 1761/1-

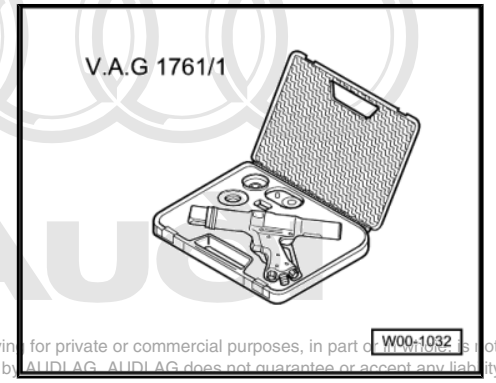

- Shielded arc welding equipment - VAS 6388-
- Rechargeable riveter - VAS 5279 A-

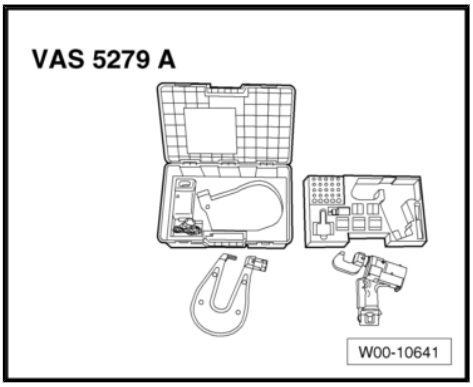

- Mole grips, 18-18 - VAS 5430/1- , 4x
- Suction lifter - V.A.G 1344 -

- Tensioning strap - T 10038-

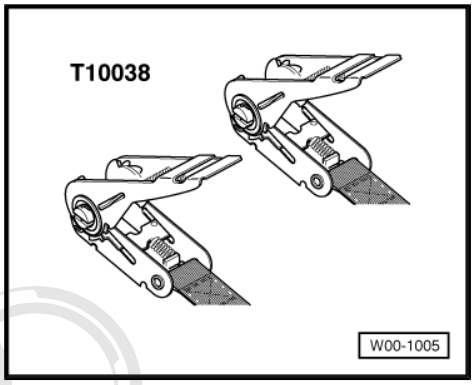

3.3 Procedure

Cutting locations

Note

- *Mask the roof side members with adhesive tape to protect them from damage and dirt.*
- *Take care not to damage roof cross members (front and rear) when cutting.*

– Separate original joint at front and rear roof frame using rechargeable riveter - VAS 5279 A- or compact booster - VAS 6790- . For attachments see ⇒ page 15 .

– Separate laser weld seam using compact angle grinder .

– Working from passenger compartment, separate bonded joints between roof and roof cross members using electric cutter .

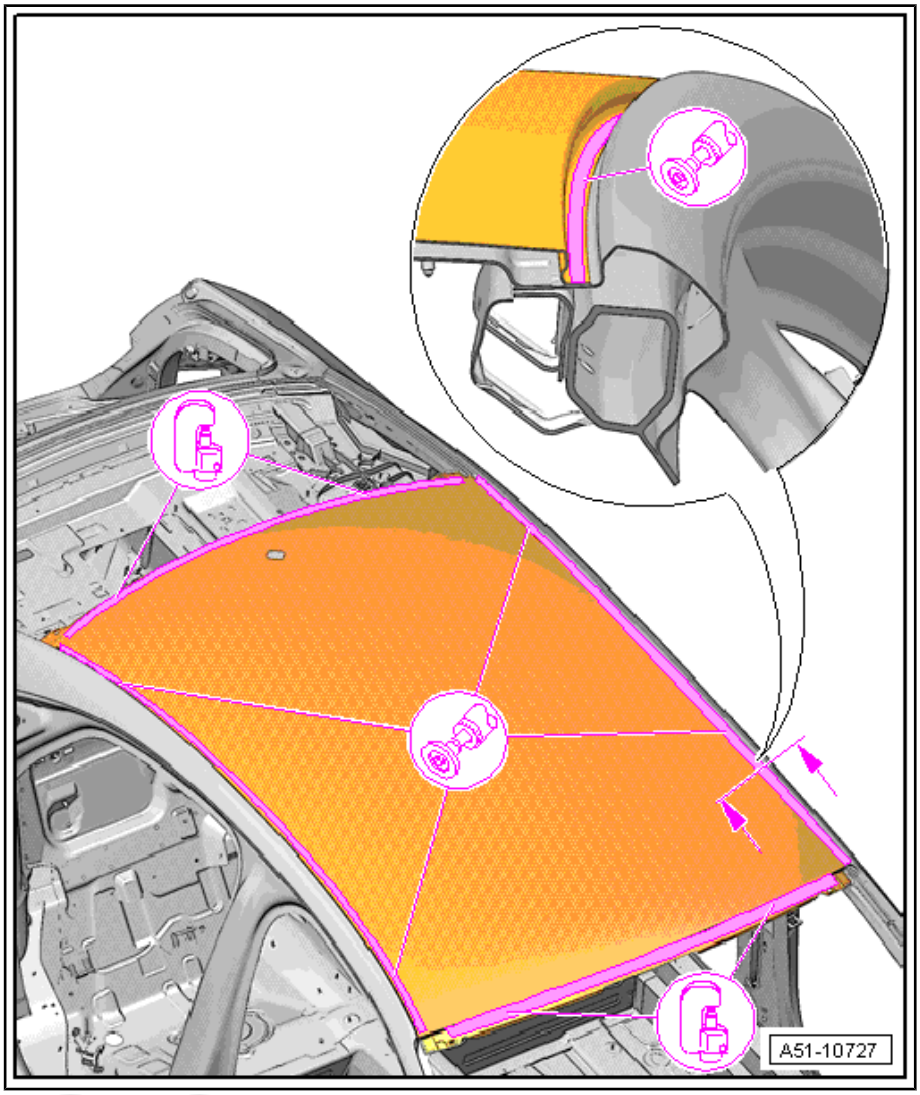

Note

- *Take care not to damage the roof side members when removing the remaining sections of the roof.*
- *Use a suitable flap disc; do not use a cutting disc or rough-filing disc.*

– Remove remaining material from laser weld seam using compact angle grinder .

– Remove all residual adhesive -1- and sealing compound from roof cross members at front and rear using scraper .

– Grind bonding areas down to bare metal.

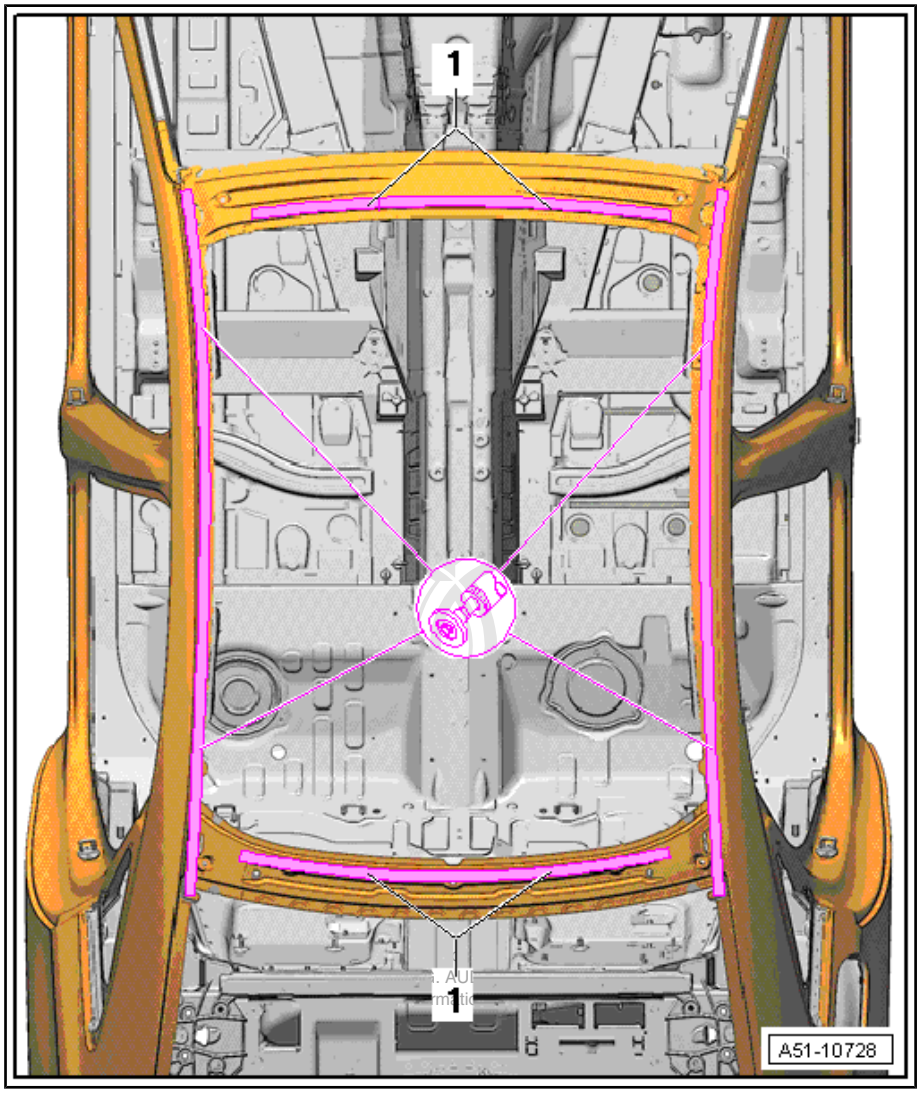

Replacement parts

- Roof
- Single-component assembly adhesive - D 190 MKD A3-
- 2-component epoxy adhesive - DA 180 A00 A2 -
- Cleaning solution - D 009 401 04-
- Punch rivet

Preparing new part

Note

- *It is essential to observe the following sequence of operations to ensure satisfactory and effective roof repair.*
- *Bonded areas must not be treated with filler coat (surfacer) and painted before bonding in the roof.*
- *The adhesive materials must be applied very quickly.*
- *Make sure adhesive is applied before pot life is exceeded.*
- *Use a pneumatic cartridge gun to apply the bonding materials.*
- *Affixing adhesive tape to the roof parallel with the bonded seam on the side prevents soiling when bonding.*

Preparing joints for adhesive application

– Prepare roof for riveting.

– Prepare body for riveting.

– Clean bonding surfaces with cleaning solution - D 009 401 04- .

– Prepare bonding area with silicate stone - DA 009 800 - and clean.

– Apply aluminium primer - DA 009 801 - to bonding surfaces using applicator - D 009 500 25 - .

Bonding in

– Apply single-component assembly adhesive - D 190 MKD A3- to roof cross members in the area of the factory bonding location using pneumatic cartridge gun - V.A.G 1761/1- .

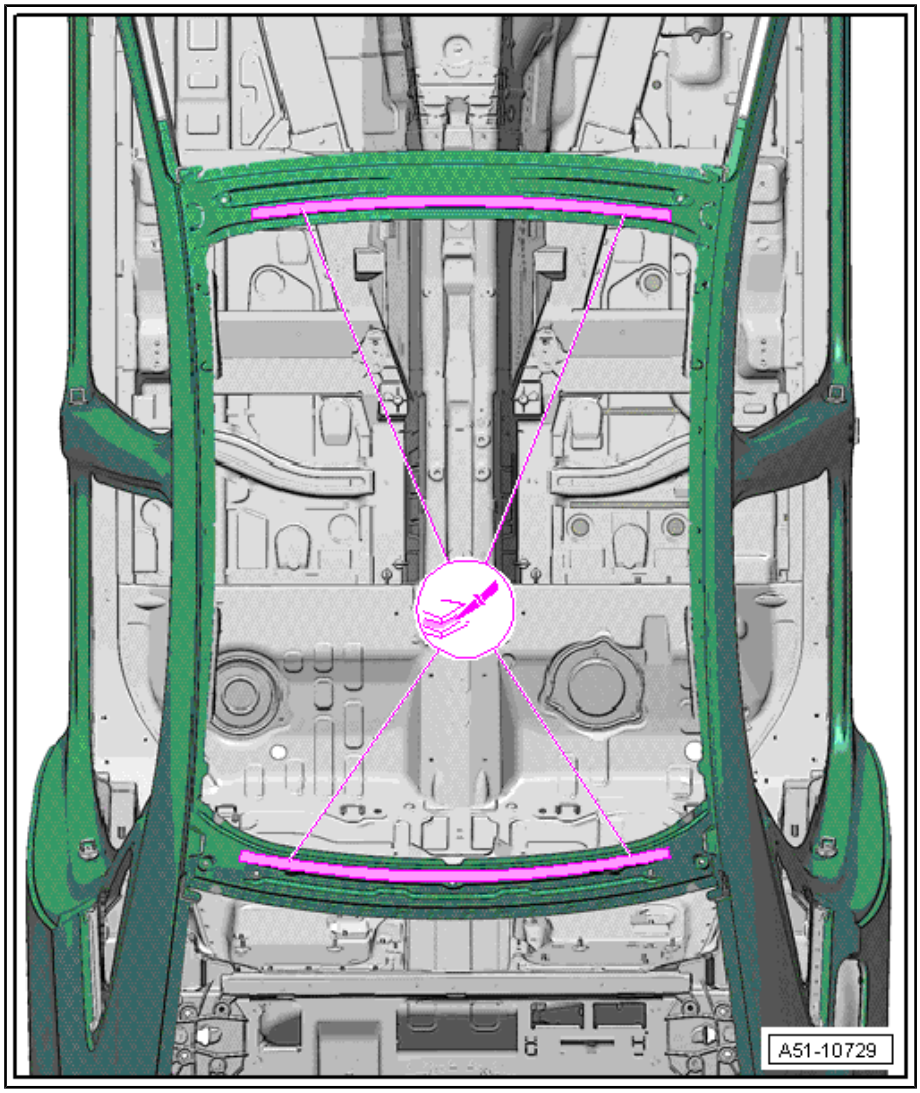

Apply 2-component epoxy adhesive - DA 180 A00 A2 - to entire riveting area using pneumatic glue gun - V.A.G 6453- .

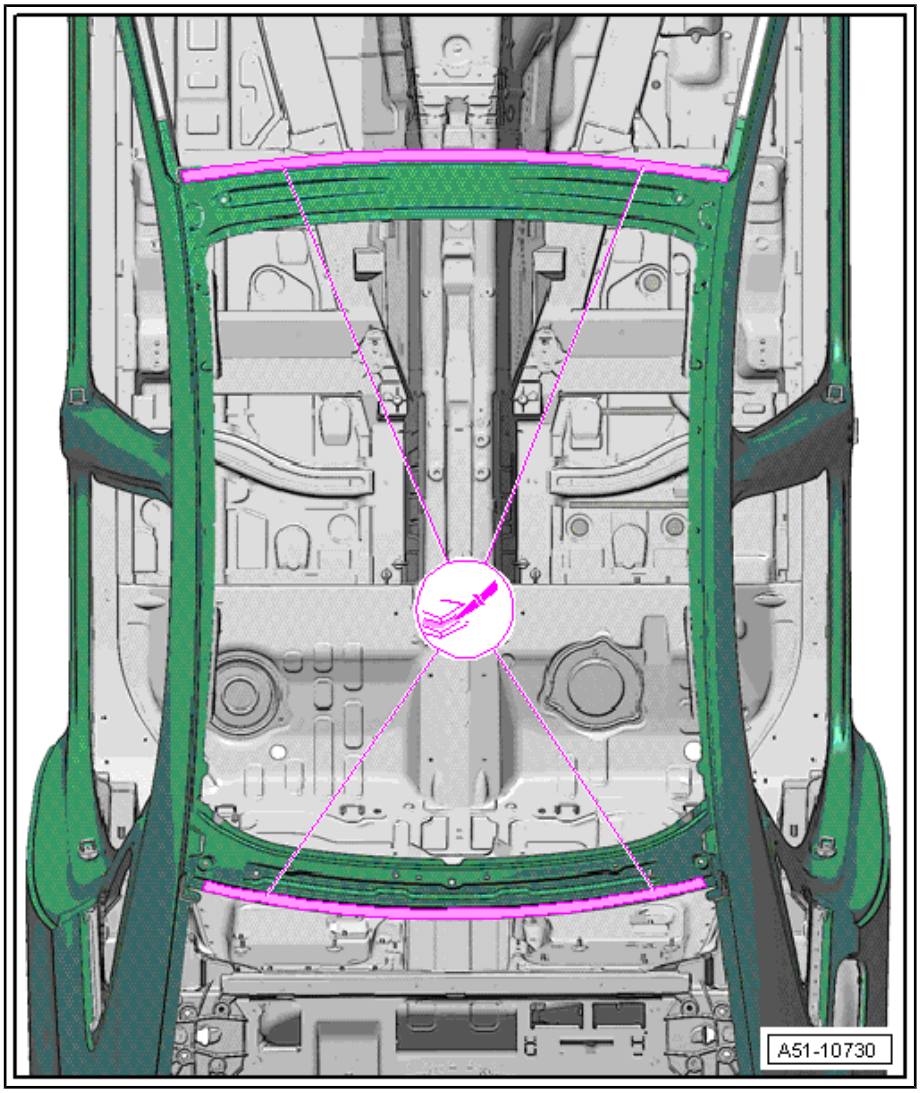

– Fix roof in position at windscreen flange and sealing flange for rear window.

– Fix roof in position at windscreen opening and rear window opening using mole grips, 18-18 - VAS 5430/1- .

Riveting in

– Rivet in roof using rechargeable riveter - VAS 5279 A- or compact booster - VAS 6790 - . For attachments see ⇒ page 15 .

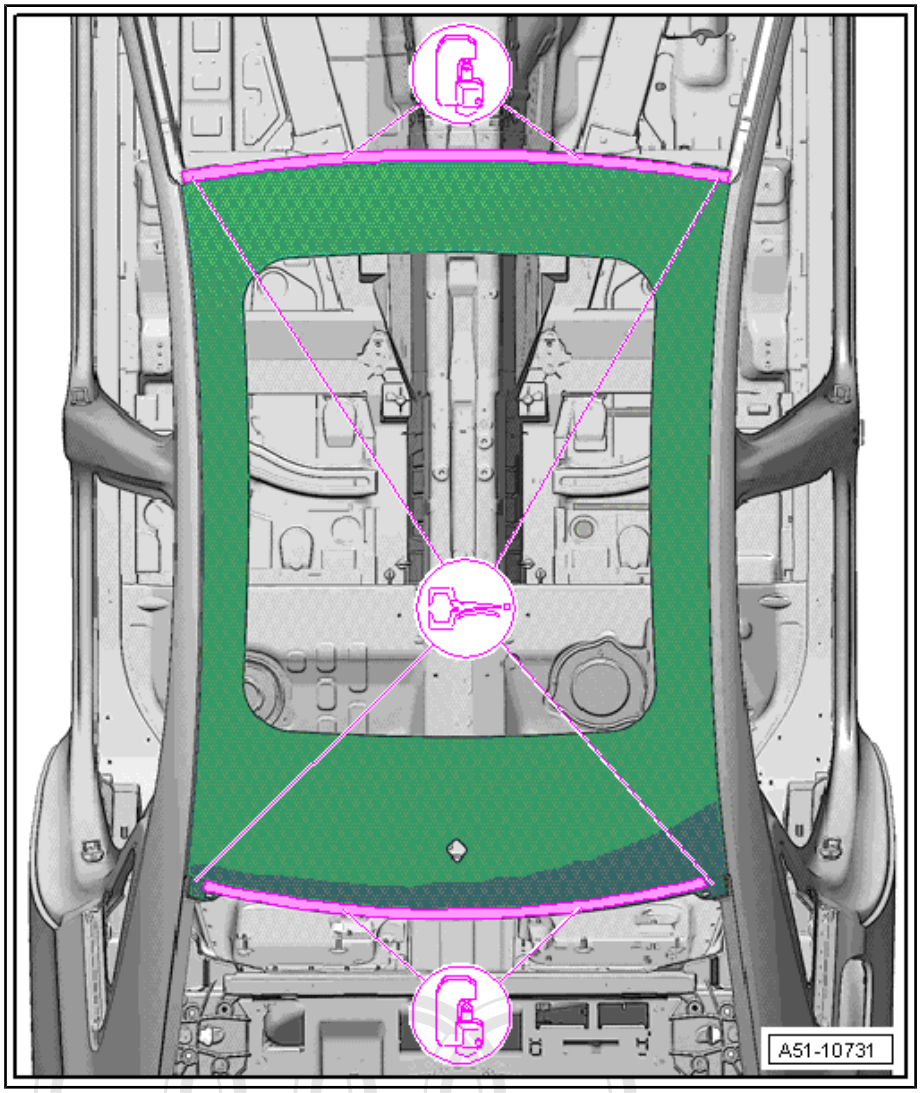

Welding in

– Additionally fix roof in position with 2 tensioning straps - T 10038- .

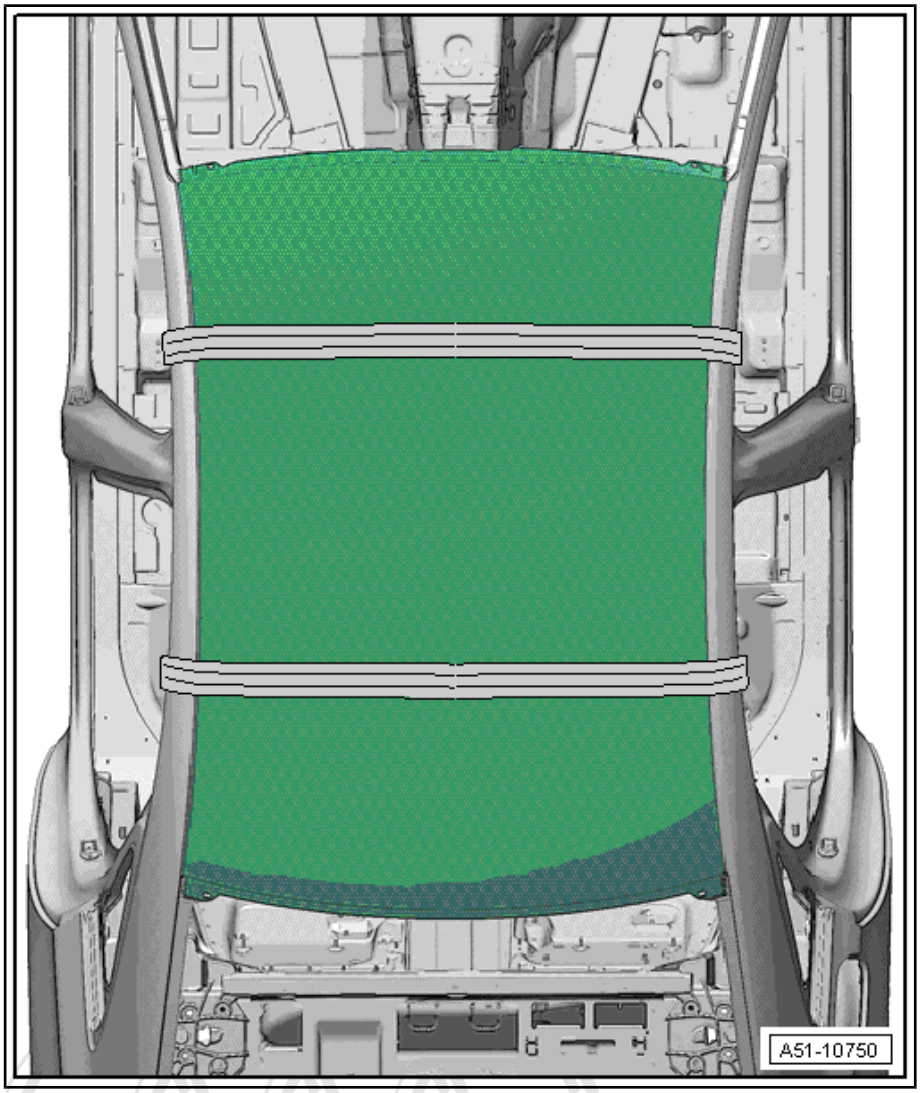

– Weld in roof at roof channel using shielded arc welding equipment : SG continuous seam (staggered - with gaps).

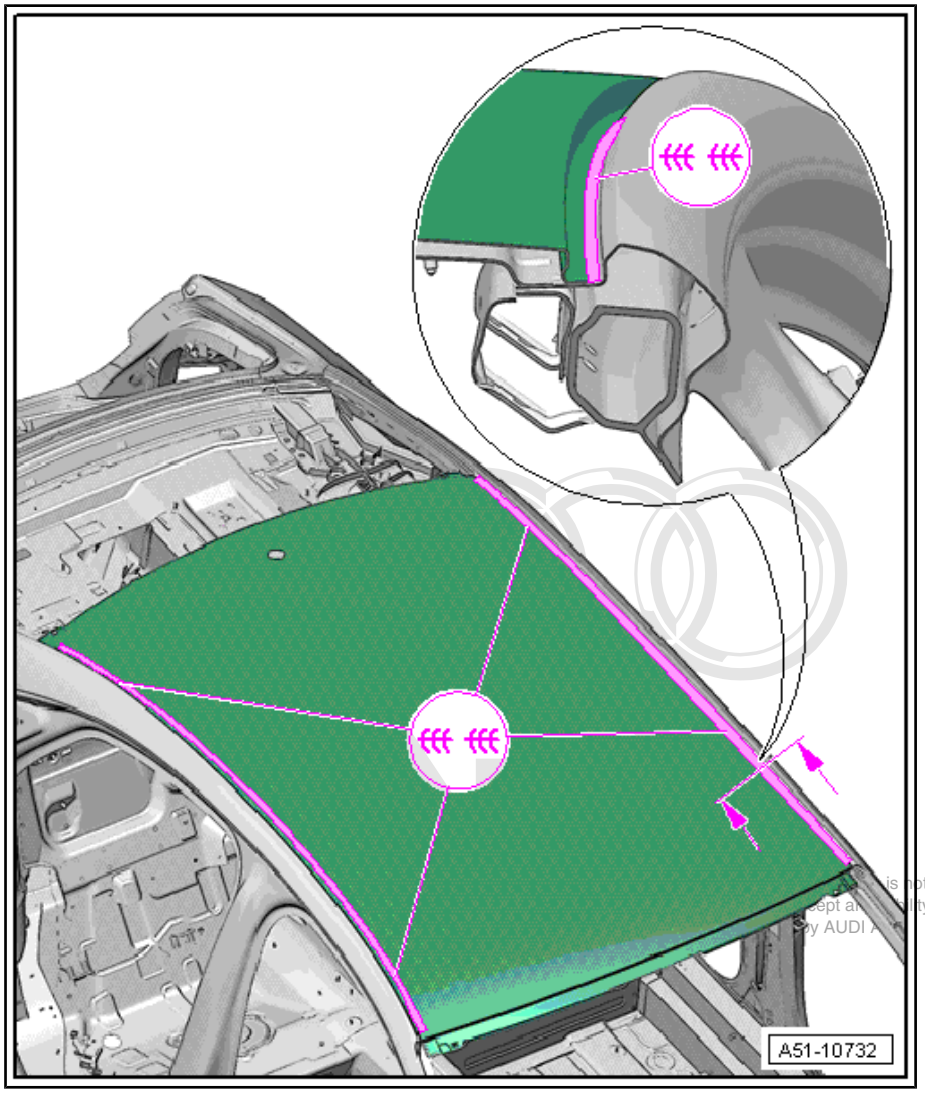
A51-10732

RO: 51 07 55 50

4 Front roof cross member - Renewal

WARNING

Always observe safety precautions.

Safety notes ⇒ General Information; Body Repairs, General Body Repairs ; Safety notes

1 - Side frame (left-side)

2 - Front roof cross member

3 - Side frame (right-side)

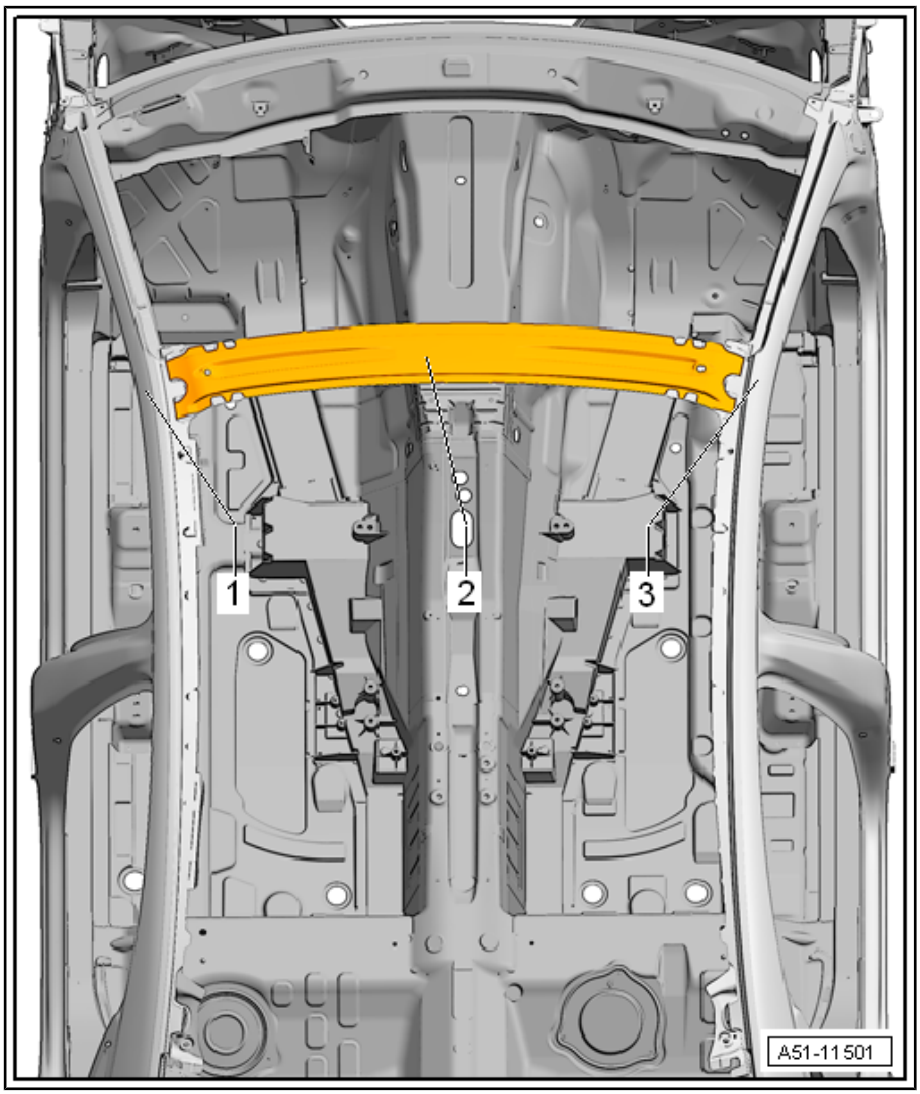

4.1 Tools

Special tools and workshop equipment required

- Compact angle grinder - VAS 5167-
- Compact booster - VAS 6790-

- Pneumatic glue gun - V.A.G 2005 B-

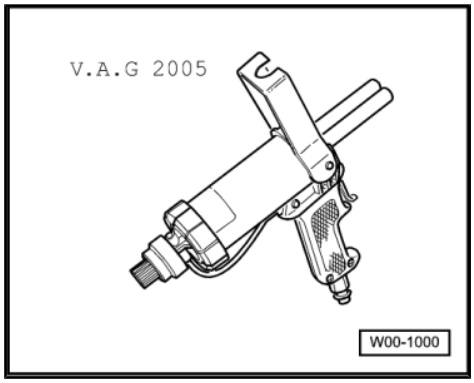

- Accessory set for rechargeable riveter - VAS 5279/1-

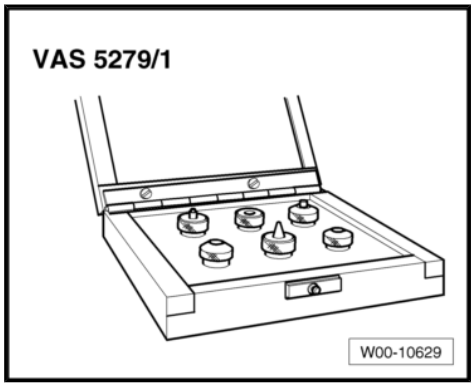

- Rechargeable riveter - VAS 5279 A-
- Alternatively, you can use the rechargeable riveter - VAS 5279 B- . This is a complete set.

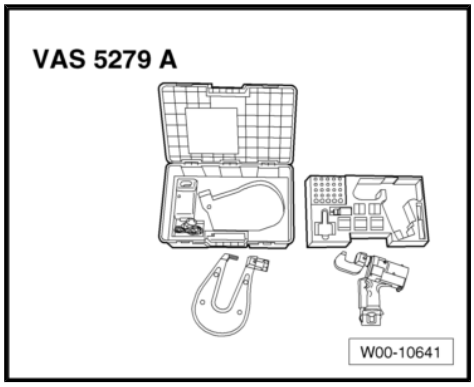

- Pneumatic jig-saw - VAS 5108 - or body saw - VAS 6598 - or -VAS 6780-

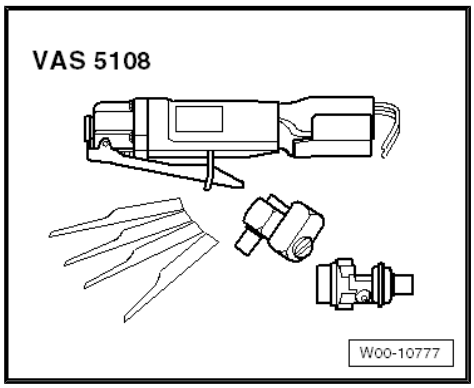

4.2 Notes for vehicles with hybrid drive

WARNING

Safety hazard: the engine can start unexpectedly.

Before carrying out general work on a vehicle with high-voltage electrical system, switch off the ignition and remove the ignition key from the vehicle.

DANGER!

When working on a vehicle with the ignition switched on or while the drive system is active, the engine can start unexpectedly and exhaust fumes can cause a health hazard in closed rooms. Moving parts can trap or draw in parts of the body and/or clothing (safety hazard).

Before switching on the ignition, perform the following steps:

- *Move selector lever to position P*
- *Activate parking brake*
- *Switch off ignition*
- *Open bonnet*
- *Connect battery charger (e.g. - VAS 5095A-) to jump-start connections of 12 V electrical system.*
- *Switch on ignition*

WARNING

Working on vehicles with high-voltage wiring:

- *Do not support yourself or tools on high-voltage wiring or associated components --> this can damage the insulation.*
- *High-voltage wiring must not be excessively bent or kinked --> this can damage the insulation.*
- *The round high-voltage connectors are colour-coded with an external coloured ring and are provided with mechanical coding or guide lugs. It is important to observe this coding when joining up the round high-voltage connectors; otherwise the connectors can be damaged.*

DANGER!

Risk of fatal injury if high-voltage components are damaged.

Observe the following when working in the vicinity of high-voltage components or wiring:

- *It is not permitted to use cutting or forming tools, other sharp-edged tools or heat sources such as welding, brazing, soldering, hot air or thermal bonding equipment.*
- *Before starting work, visually inspect the high-voltage components in the areas involved.*
- *Before working in the engine compartment, visually inspect the power and control electronics for electric drive - JX1- , electric drive motor - V141- , air conditioner compressor - V470- and high-voltage wiring.*
- *Before working on the vehicle underbody, visually inspect the high-voltage wiring and covers.*
- *Before working on the rear section of the vehicle, visually inspect the high-voltage wiring and the hybrid battery unit with the maintenance connector for high-voltage system - TW - .*
- *Visually inspect all potential equalisation lines.*

Check the following when making the visual inspection:

- *There must be no external damage on any component.*
- *The insulation of the high-voltage wiring and potential equalisation lines must not be damaged.*
- *There must be no unusual deformation of the high-voltage wiring.*
- *All high-voltage components must be identified by a red warning sticker.*

DANGER!

High voltage can cause fatal injury.

Danger of severe or fatal injuries from electric shock.

- *The high-voltage system may only be re-energised by a suitably qualified person (Audi high-voltage technician).*
- *The system may only be re-energised using the vehicle diagnostic tester via "Guided Fault Finding".*
- *The vehicle is then made ready for operation again by the qualified person (Audi high-voltage technician).*
- *The qualified person (Audi high-voltage technician) marks the vehicle by attaching the appropriate warning signs.*

DANGER!

High voltage can cause fatal injury.

Danger of severe or fatal injuries from electric shock.

- *The high-voltage system may only be de-energised by a suitably qualified person (Audi high-voltage technician).*
- *It must be definitely confirmed that the high-voltage system is de-energised. The system may only be de-energised using the vehicle diagnostic tester via "Guided Fault Finding".*
- *The qualified person (Audi high-voltage technician) confirms that the system is de-energised and ensures that it cannot be re-energised by fitting the locking cap - T40262- and by storing the ignition key and the maintenance connector for high-voltage system - TW - in a safe place.*
- *The qualified person (Audi high-voltage technician) marks the vehicle by attaching the appropriate warning signs.*

Note

Please refer to the Electronic parts catalogue when ordering replacement parts.

WARNING

Accidents can be caused if the driver is distracted by test equipment while road-testing, or if test equipment is not properly secured.

Injuries can be caused if the passenger's airbag is triggered in a collision.

- *The use of test equipment while driving causes distraction.*
- *There is an increased risk of injury if test equipment is not secured.*
- *Move the front passenger's seat back as far as it will go.*
- *Use only the vehicle diagnostic and service information system - VAS 5052- or the diagnostic system - VAS 5053- .*
- *The test equipment -1- must rest flat on the passenger's thighs (as shown in illustration) and must be operated by the passenger.*

4.3 Procedure

Cutting locations

- Roof (normal version) removed ⇒ page 117
- Roof (long version) removed ⇒ page 137

– Separate original joint using rechargeable riveter - VAS 5279 A- or compact booster - VAS 6790- . For attachments see ⇒ page 15 .

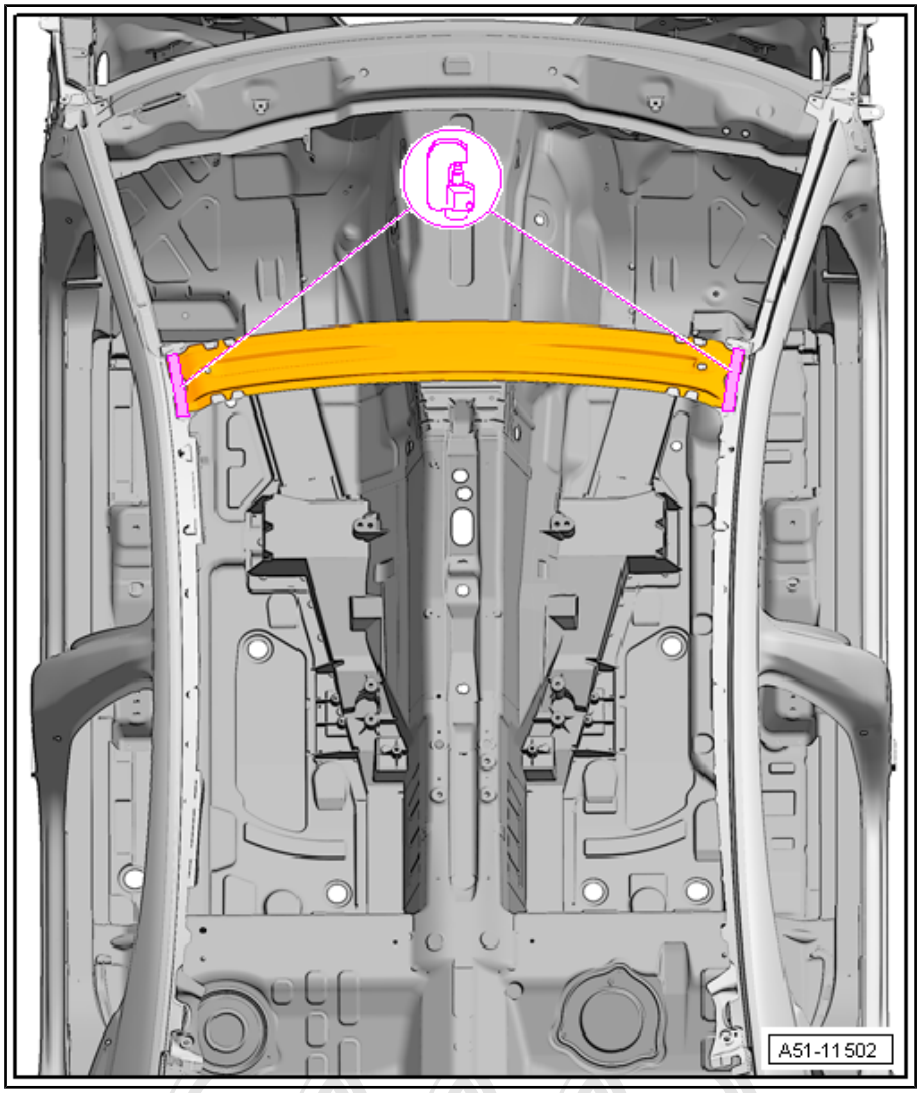

– Remove remaining material using compact angle grinder .

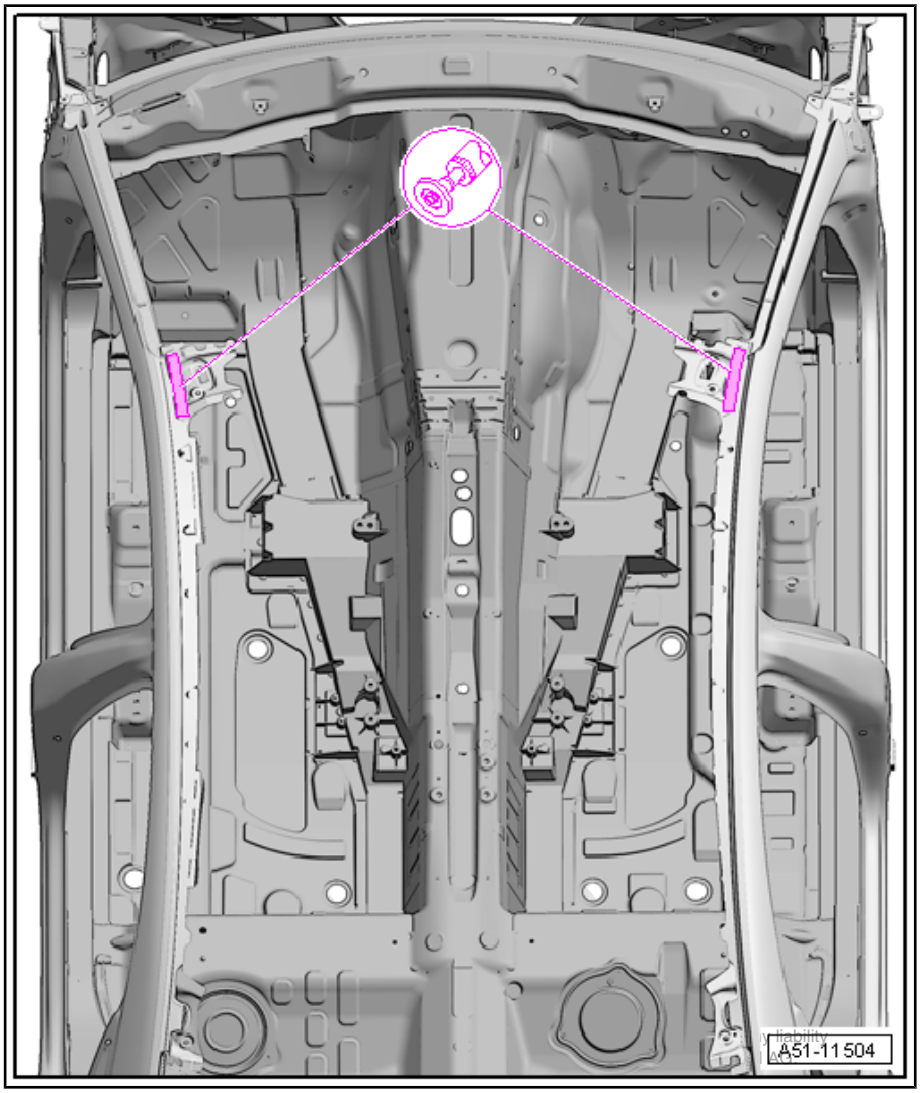

Replacement parts

- ♦ Front roof cross member
- ♦ 2-component epoxy adhesive - DA 001 730 A2-
- ♦ Aluminium primer - DA 009 801-
- ♦ Punch rivet

– Apply aluminium primer - DA 009 801- to bonding surfaces using paintbrush.

– Apply 2-component epoxy adhesive - DA 001 730 A2- to entire riveting area.

Preparing joints for adhesive application

– Prepare new part for riveting.

– Clean bonding surfaces with cleaning solution - D 009 401 04- .

– Prepare bonding area with silicate stone - DA 009 800 - and clean.

– Apply aluminium primer - DA 009 801 - to bonding surfaces using applicator - D 009 500 25 - .

– Apply 2-component body adhesive - DA 001 730 A2- to entire riveting area using pneumatic glue gun - V.A.G 2005 B- .

– Apply adhesive.

Riveting in

– Match up and fix new part in position.

– Rivet in roof cross member using rechargeable riveter - VAS 5279 A- or compact booster - VAS 6790 - . For attachments see ⇒ page 15 .

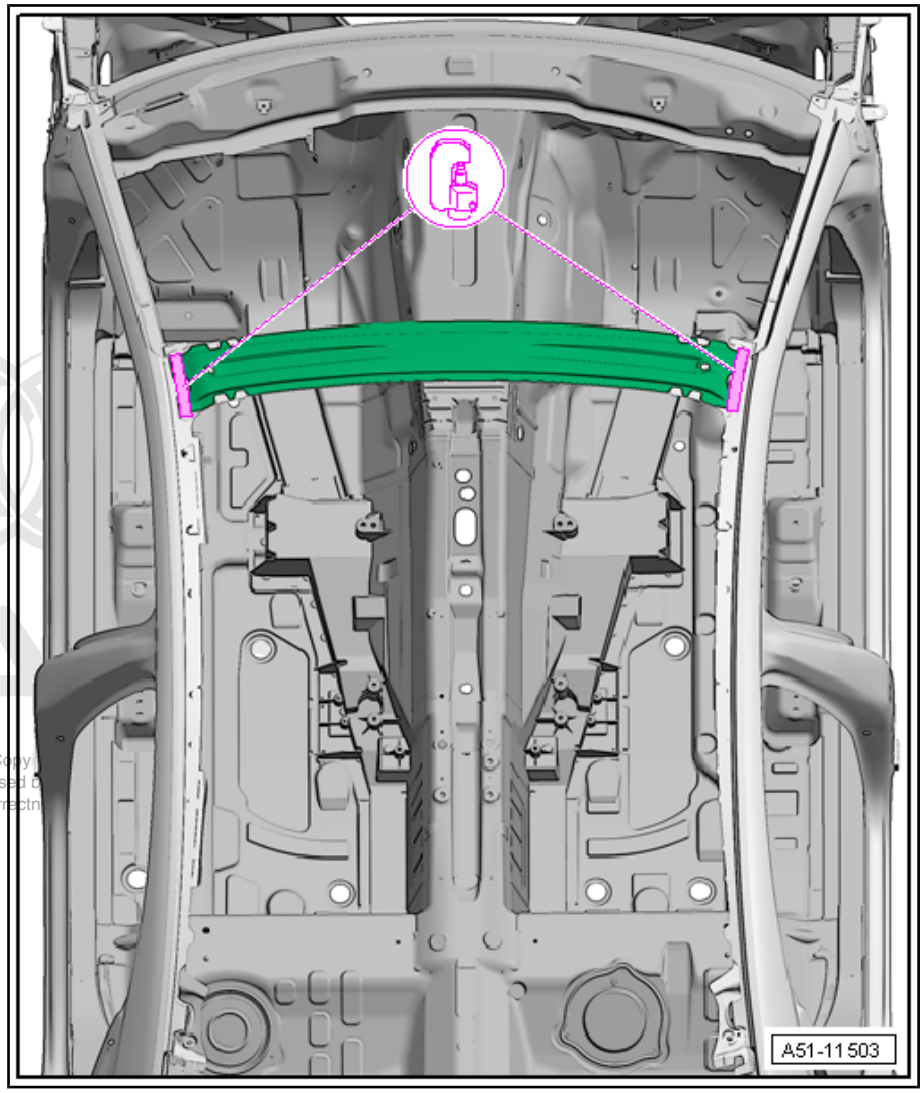

- Install roof (normal version) ⇒ page 117 .
- Install roof (long version) ⇒ page 137 .

RO: 51 09 55 50

5 Rear roof cross member - Renewal

1 - Side frame (left-side)

2 - Rear roof cross member

3 - Side frame (right-side)

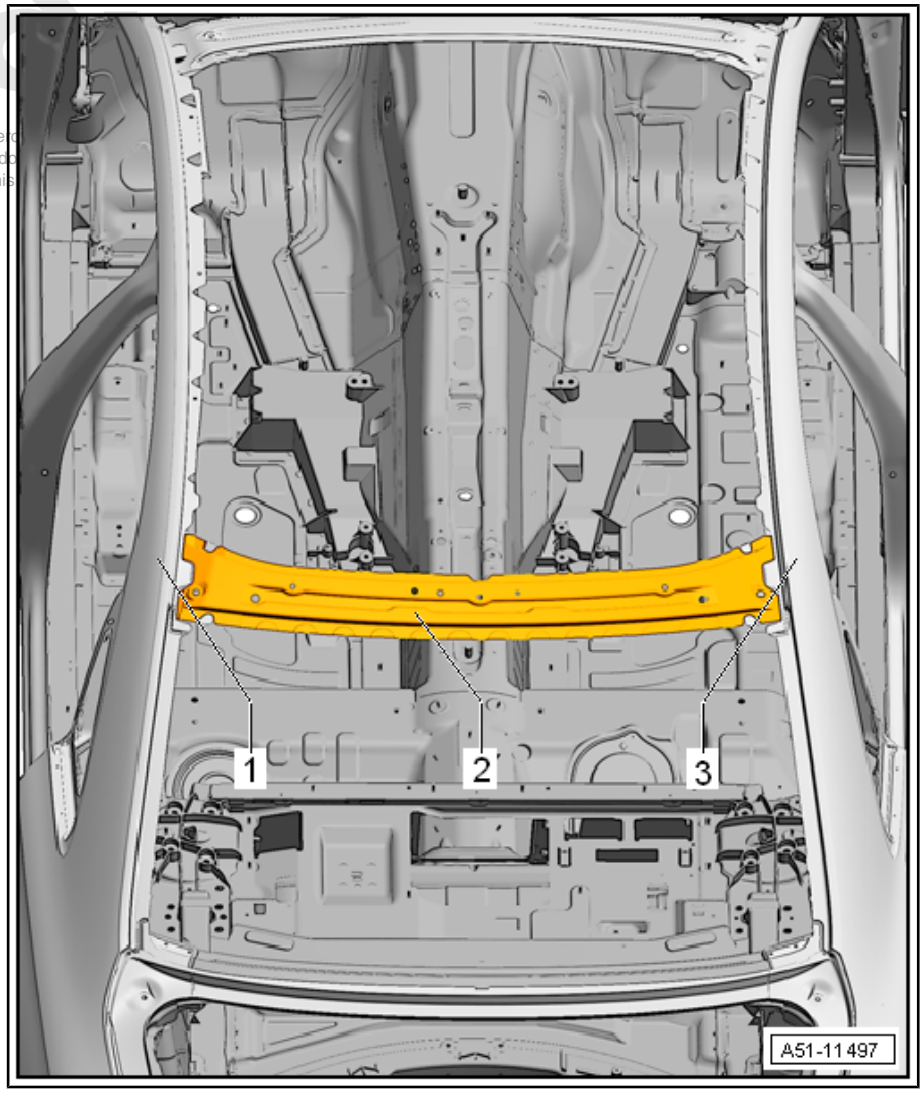

5.1 Notes for vehicles with hybrid drive

WARNING

Safety hazard: the engine can start unexpectedly.

Before carrying out general work on a vehicle with high-voltage electrical system, switch off the ignition and remove the ignition key from the vehicle.

DANGER!

When working on a vehicle with the ignition switched on or while the drive system is active, the engine can start unexpectedly and exhaust fumes can cause a health hazard in closed rooms. Moving parts can trap or draw in parts of the body and/or clothing (safety hazard).

Before switching on the ignition, perform the following steps:

- *Move selector lever to position P*
- *Activate parking brake*
- *Switch off ignition*
- *Open bonnet*
- *Connect battery charger (e.g. - VAS 5095A-) to jump-start connections of 12 V electrical system.*
- *Switch on ignition*

WARNING

Working on vehicles with high-voltage wiring:

- *Do not support yourself or tools on high-voltage wiring or associated components --> this can damage the insulation.*
- *High-voltage wiring must not be excessively bent or kinked --> this can damage the insulation.*
- *The round high-voltage connectors are colour-coded with an external coloured ring and are provided with mechanical coding or guide lugs. It is important to observe this coding when joining up the round high-voltage connectors; otherwise the connectors can be damaged.*

DANGER!

Risk of fatal injury if high-voltage components are damaged.

Observe the following when working in the vicinity of high-voltage components or wiring:

- *It is not permitted to use cutting or forming tools, other sharp-edged tools or heat sources such as welding, brazing, soldering, hot air or thermal bonding equipment.*
- *Before starting work, visually inspect the high-voltage components in the areas involved.*
- *Before working in the engine compartment, visually inspect the power and control electronics for electric drive - JX1- , electric drive motor - V141- , air conditioner compressor - V470- and high-voltage wiring.*
- *Before working on the vehicle underbody, visually inspect the high-voltage wiring and covers.*
- *Before working on the rear section of the vehicle, visually inspect the high-voltage wiring and the hybrid battery unit with the maintenance connector for high-voltage system - TW - .*
- *Visually inspect all potential equalisation lines.*

Check the following when making the visual inspection:

- *There must be no external damage on any component.*
- *The insulation of the high-voltage wiring and potential equalisation lines must not be damaged.*
- *There must be no unusual deformation of the high-voltage wiring.*
- *All high-voltage components must be identified by a red warning sticker.*

DANGER!

High voltage can cause fatal injury.

Danger of severe or fatal injuries from electric shock.

- *The high-voltage system may only be re-energised by a suitably qualified person (Audi high-voltage technician).*
- *The system may only be re-energised using the vehicle diagnostic tester via "Guided Fault Finding".*
- *The vehicle is then made ready for operation again by the qualified person (Audi high-voltage technician).*
- *The qualified person (Audi high-voltage technician) marks the vehicle by attaching the appropriate warning signs.*

DANGER!

High voltage can cause fatal injury.

Danger of severe or fatal injuries from electric shock.

- *The high-voltage system may only be de-energised by a suitably qualified person (Audi high-voltage technician).*
- *It must be definitely confirmed that the high-voltage system is de-energised. The system may only be de-energised using the vehicle diagnostic tester via "Guided Fault Finding".*
- *The qualified person (Audi high-voltage technician) confirms that the system is de-energised and ensures that it cannot be re-energised by fitting the locking cap - T40262- and by storing the ignition key and the maintenance connector for high-voltage system - TW - in a safe place.*
- *The qualified person (Audi high-voltage technician) marks the vehicle by attaching the appropriate warning signs.*

Note

Please refer to the Electronic parts catalogue when ordering replacement parts.

WARNING

Accidents can be caused if the driver is distracted by test equipment while road-testing, or if test equipment is not properly secured.

Injuries can be caused if the passenger's airbag is triggered in a collision.

- *The use of test equipment while driving causes distraction.*
- *There is an increased risk of injury if test equipment is not secured.*
- *Move the front passenger's seat back as far as it will go.*
- *Use only the vehicle diagnostic and service information system - VAS 5052- or the diagnostic system - VAS 5053- .*
- *The test equipment -1- must rest flat on the passenger's thighs (as shown in illustration) and must be operated by the passenger.*

5.2 Tools

Special tools and workshop equipment required

- Compact angle grinder - VAS 5167-
- Compact booster - VAS 6790-

- Pneumatic glue gun - V.A.G 2005 B-

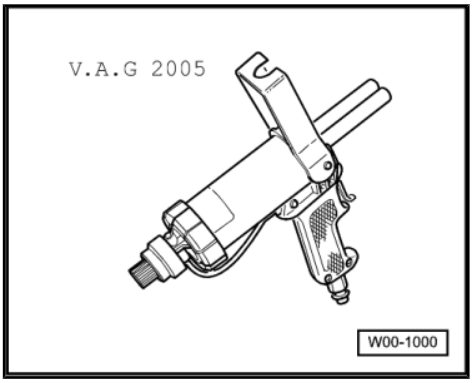

- Accessory set for rechargeable riveter - VAS 5279/1-

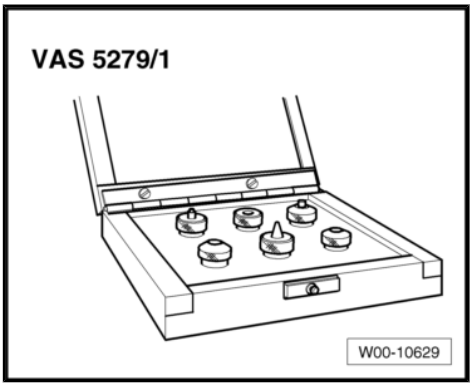

- Rechargeable riveter - VAS 5279 A-
- Alternatively, you can use the rechargeable riveter - VAS 5279 B- . This is a complete set.

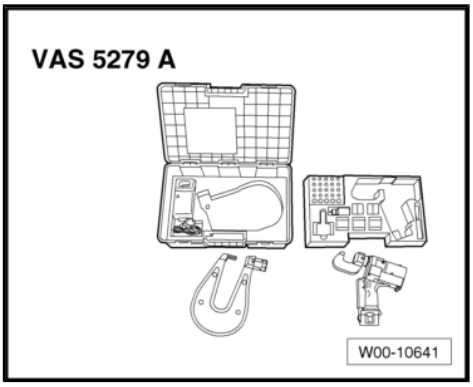

- Pneumatic jig-saw - VAS 5108 - or body saw - VAS 6598 - or -VAS 6780-

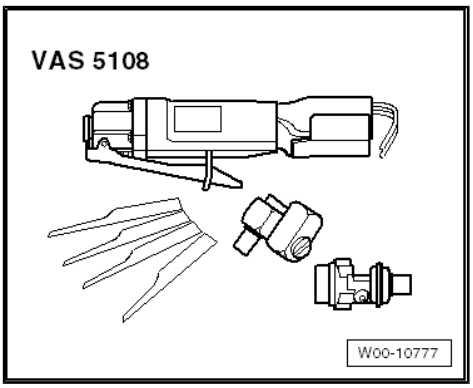

5.3 Procedure

Cutting locations

- Roof (normal version) removed ⇒ page 117

- Roof (long version) removed ⇒ page 137

– Separate original joint using rechargeable riveter - VAS 5279 A- or compact booster - VAS 6790- . For attachments see ⇒ page 15 .

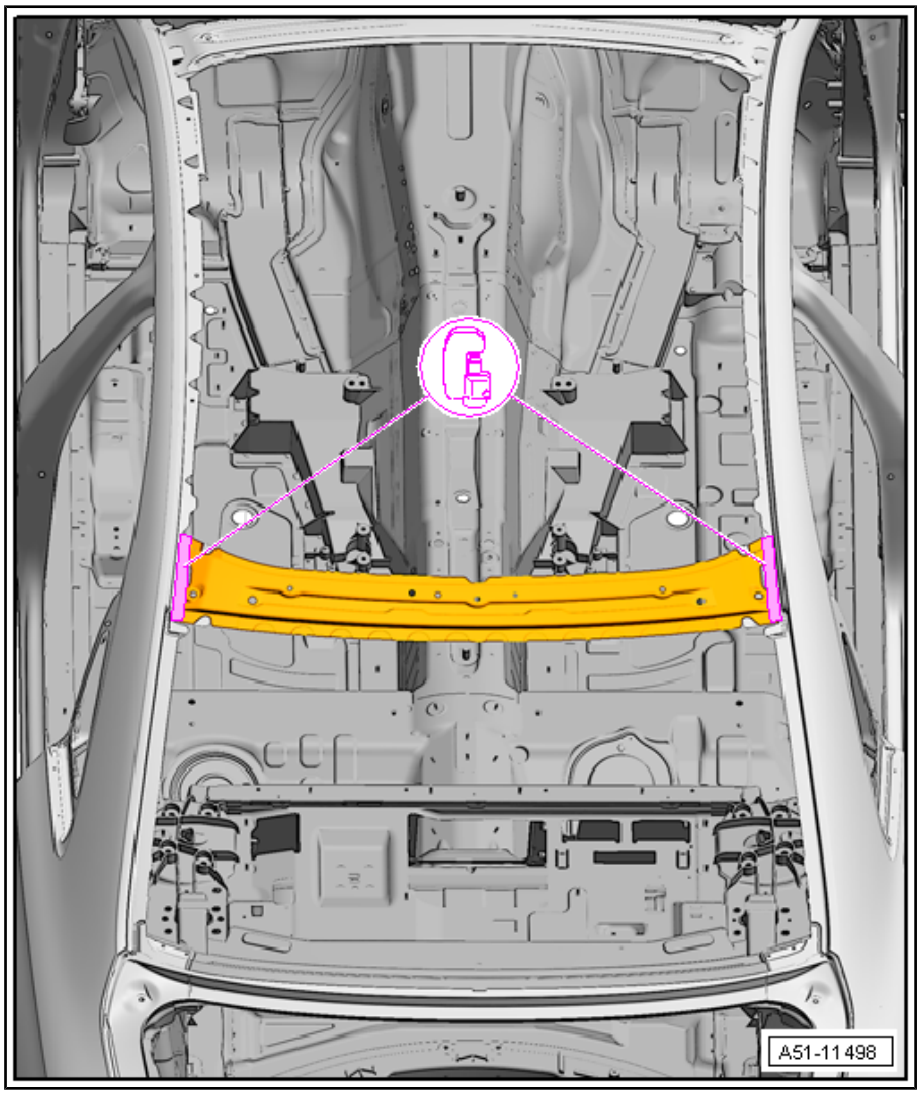

– Remove remaining material using compact angle grinder .

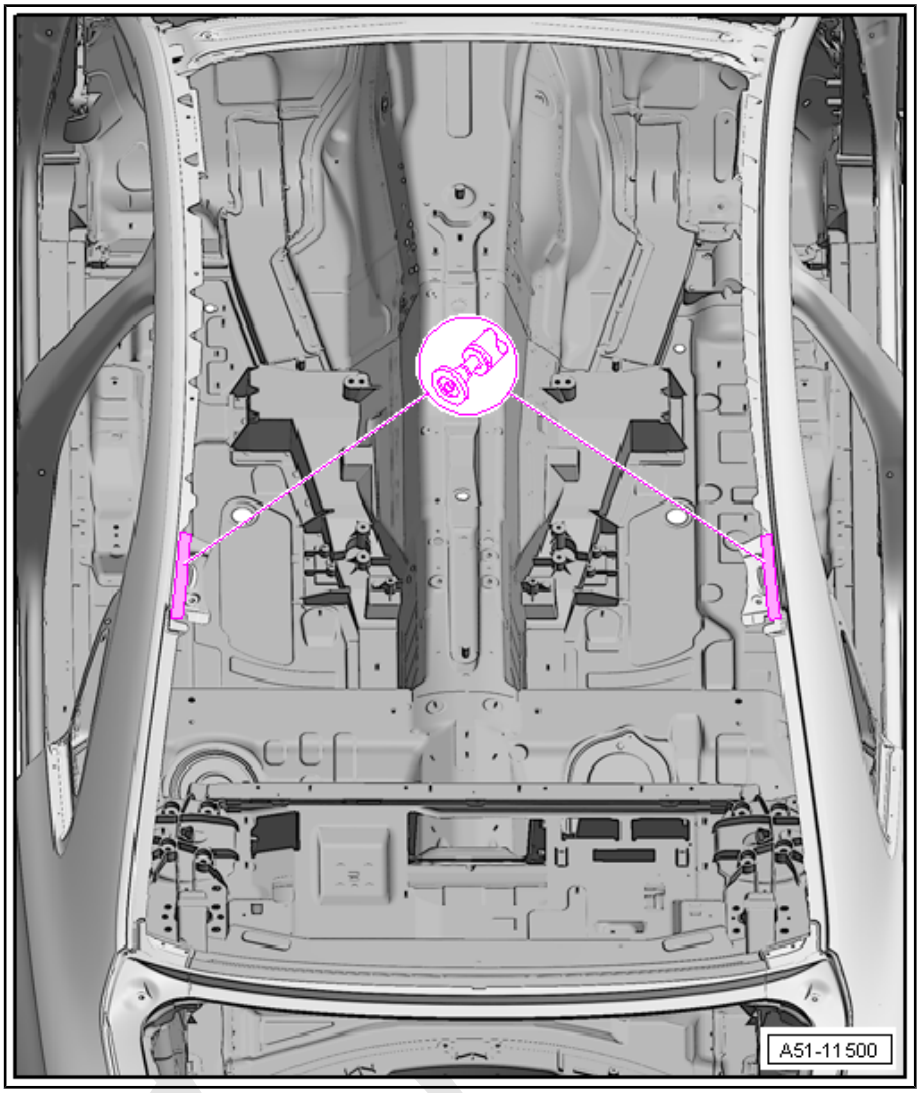

Replacement parts

- Rear roof cross member
- 2-component epoxy adhesive - DA 001 730 A2-
- Aluminium primer - DA 009 801-
- Punch rivet

Preparing joints for adhesive application

– Prepare new part for riveting.

– Clean bonding surfaces with cleaning solution - D 009 401 04- .

– Prepare bonding area with silicate stone - DA 009 800 - and clean.

– Apply aluminium primer - DA 009 801 - to bonding surfaces using applicator - D 009 500 25 - .

– Apply 2-component body adhesive - DA 001 730 A2- to entire riveting area using pneumatic glue gun - V.A.G 2005 B- .

– Prepare flanges on body and new parts for welding.

– Apply adhesive.

Riveting in

– Rivet in rear roof cross member using rechargeable riveter - VAS 5279 A- or compact booster - VAS 6790 - . For attachments see ⇒ page 15 .

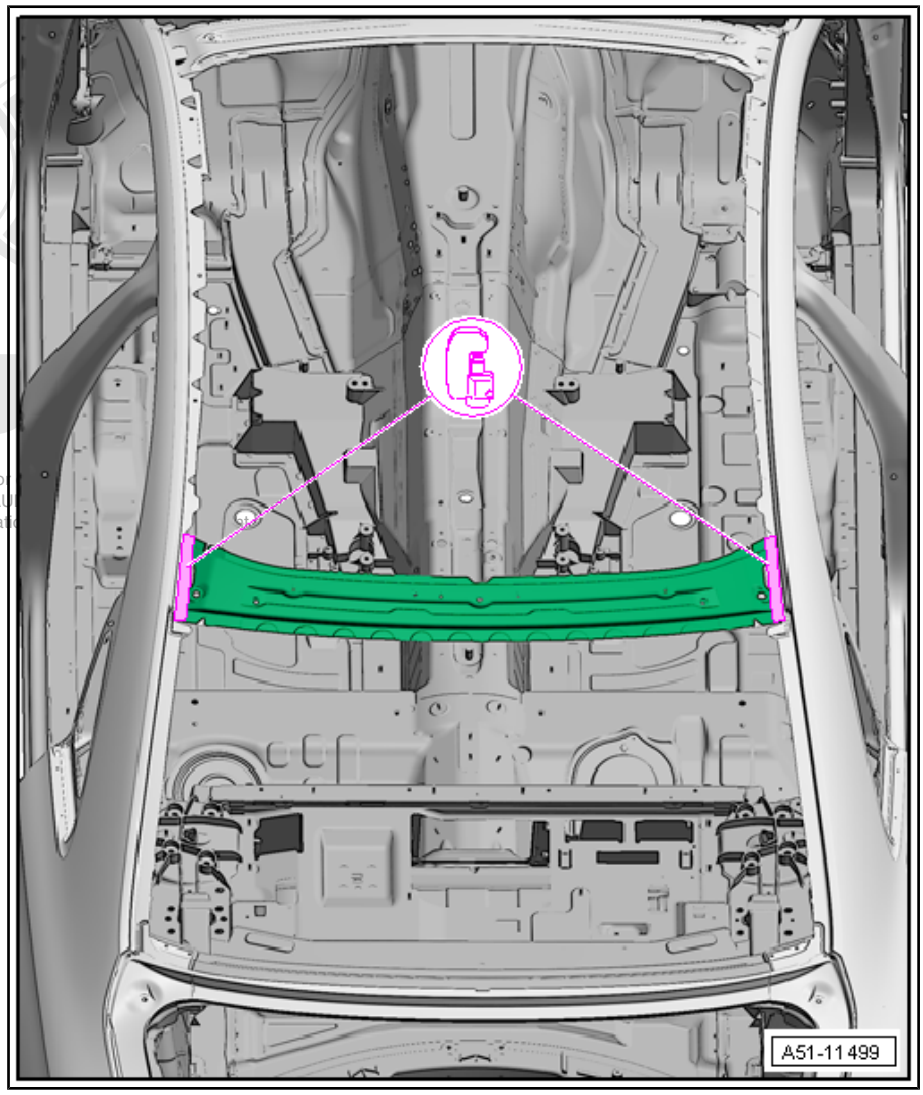

- Install roof (normal version) ⇒ page 117 .
- Install roof (long version) ⇒ page 137 .

RO: 51 37 55 00

6 Outer A-pillar - Renewal

1 - A-pillar

2 - Moulded foam insert

3 - Upper separating cut

4 - B-pillar

5 - Separating cut in side member

6 - Separating cut

Partial renewal
Partial A-pillar renewal is possible with this separating cut.

7 - Dimension for separating cut at side member -a- = 80 mm

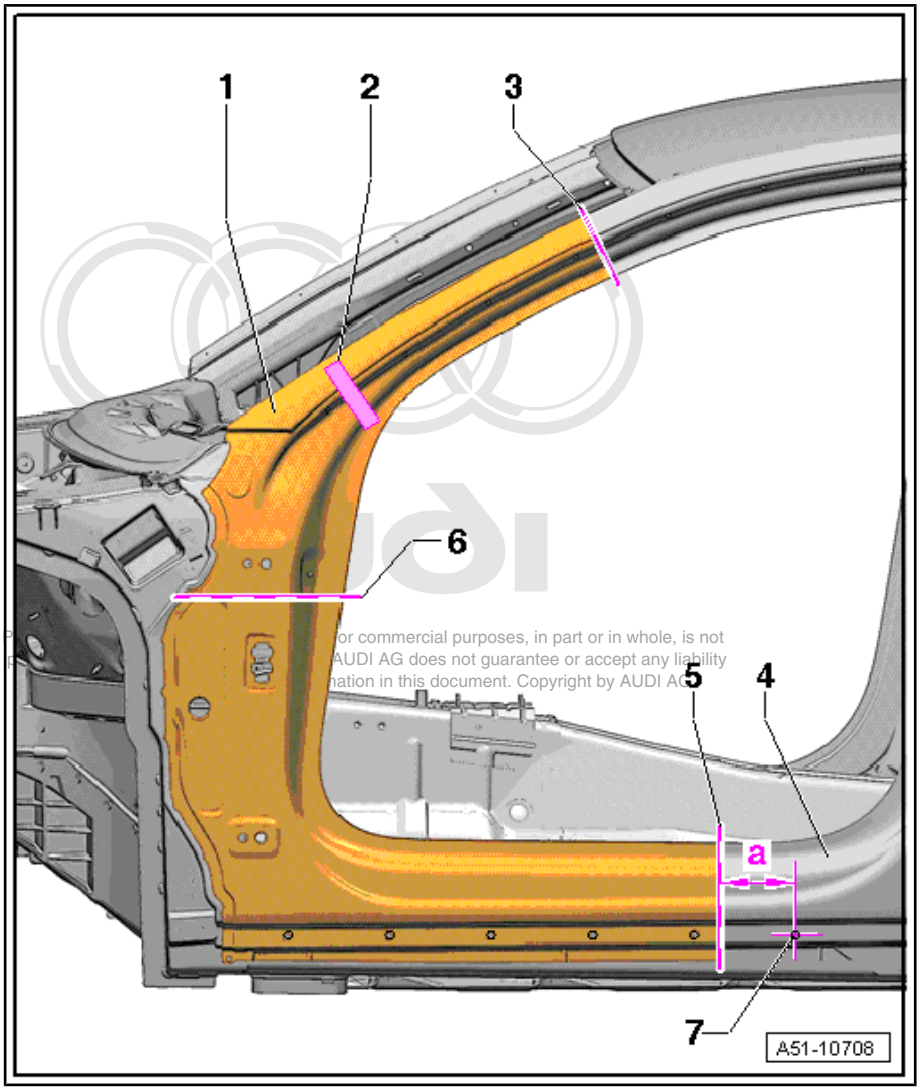

6.1 Notes for vehicles with hybrid drive

WARNING

Safety hazard: the engine can start unexpectedly.

Before carrying out general work on a vehicle with high-voltage electrical system, switch off the ignition and remove the ignition key from the vehicle.

DANGER!

When working on a vehicle with the ignition switched on or while the drive system is active, the engine can start unexpectedly and exhaust fumes can cause a health hazard in closed rooms. Moving parts can trap or draw in parts of the body and/or clothing (safety hazard).

Before switching on the ignition, perform the following steps:

- *Move selector lever to position P*
- *Activate parking brake*
- *Switch off ignition*
- *Open bonnet*
- *Connect battery charger (e.g. - VAS 5095A-) to jump-start connections of 12 V electrical system.*
- *Switch on ignition*

WARNING

Working on vehicles with high-voltage wiring:

- *Do not support yourself or tools on high-voltage wiring or associated components --> this can damage the insulation.*
- *High-voltage wiring must not be excessively bent or kinked --> this can damage the insulation.*
- *The round high-voltage connectors are colour-coded with an external coloured ring and are provided with mechanical coding or guide lugs. It is important to observe this coding when joining up the round high-voltage connectors; otherwise the connectors can be damaged.*

DANGER!

Risk of fatal injury if high-voltage components are damaged.

Observe the following when working in the vicinity of high-voltage components or wiring:

- *It is not permitted to use cutting or forming tools, other sharp-edged tools or heat sources such as welding, brazing, soldering, hot air or thermal bonding equipment.*
- *Before starting work, visually inspect the high-voltage components in the areas involved.*
- *Before working in the engine compartment, visually inspect the power and control electronics for electric drive - JX1- , electric drive motor - V141- , air conditioner compressor - V470- and high-voltage wiring.*
- *Before working on the vehicle underbody, visually inspect the high-voltage wiring and covers.*
- *Before working on the rear section of the vehicle, visually inspect the high-voltage wiring and the hybrid battery unit with the maintenance connector for high-voltage system - TW - .*
- *Visually inspect all potential equalisation lines.*

Check the following when making the visual inspection:

- *There must be no external damage on any component.*
- *The insulation of the high-voltage wiring and potential equalisation lines must not be damaged.*
- *There must be no unusual deformation of the high-voltage wiring.*
- *All high-voltage components must be identified by a red warning sticker.*

DANGER!

High voltage can cause fatal injury.

Danger of severe or fatal injuries from electric shock.

- *The high-voltage system may only be re-energised by a suitably qualified person (Audi high-voltage technician).*
- *The system may only be re-energised using the vehicle diagnostic tester via "Guided Fault Finding".*
- *The vehicle is then made ready for operation again by the qualified person (Audi high-voltage technician).*
- *The qualified person (Audi high-voltage technician) marks the vehicle by attaching the appropriate warning signs.*

DANGER!

High voltage can cause fatal injury.

Danger of severe or fatal injuries from electric shock.

- *The high-voltage system may only be de-energised by a suitably qualified person (Audi high-voltage technician).*
- *It must be definitely confirmed that the high-voltage system is de-energised. The system may only be de-energised using the vehicle diagnostic tester via "Guided Fault Finding".*
- *The qualified person (Audi high-voltage technician) confirms that the system is de-energised and ensures that it cannot be re-energised by fitting the locking cap - T40262- and by storing the ignition key and the maintenance connector for high-voltage system - TW - in a safe place.*
- *The qualified person (Audi high-voltage technician) marks the vehicle by attaching the appropriate warning signs.*

Note

Please refer to the Electronic parts catalogue when ordering replacement parts.

WARNING

Accidents can be caused if the driver is distracted by test equipment while road-testing, or if test equipment is not properly secured.

Injuries can be caused if the passenger's airbag is triggered in a collision.

- *The use of test equipment while driving causes distraction.*
- *There is an increased risk of injury if test equipment is not secured.*
- *Move the front passenger's seat back as far as it will go.*
- *Use only the vehicle diagnostic and service information system - VAS 5052- or the diagnostic system - VAS 5053- .*
- *The test equipment -1- must rest flat on the passenger's thighs (as shown in illustration) and must be operated by the passenger.*

6.2 Tools

Special tools and workshop equipment required

- Compact angle grinder - VAS 5167-
- Shielded arc welding equipment - VAS 6388-
- Compact booster - VAS 6790-

- Pneumatic glue gun - V.A.G 2005 B-

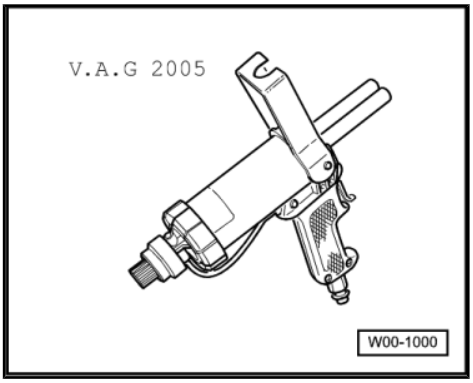

- Accessory set for rechargeable riveter - VAS 5279/1-

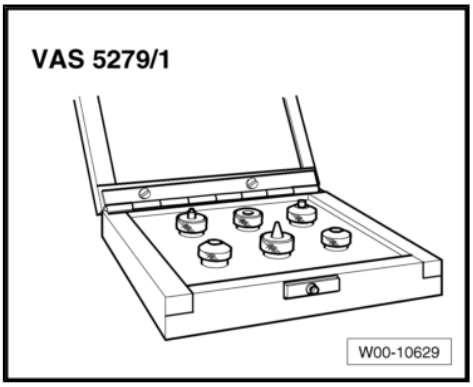

- Rechargeable riveter - VAS 5279 A-
- Alternatively, you can use the rechargeable riveter - VAS 5279 B- . This is a complete set.

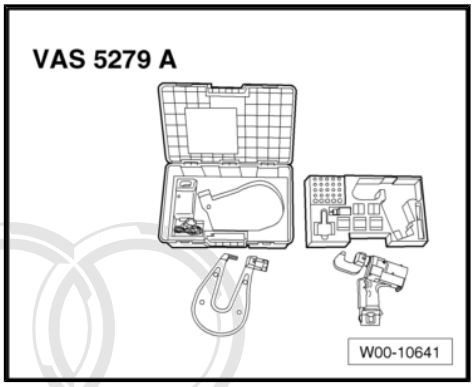

- Pneumatic jig-saw - VAS 5108 - or body saw - VAS 6598 - or -VAS 6780-

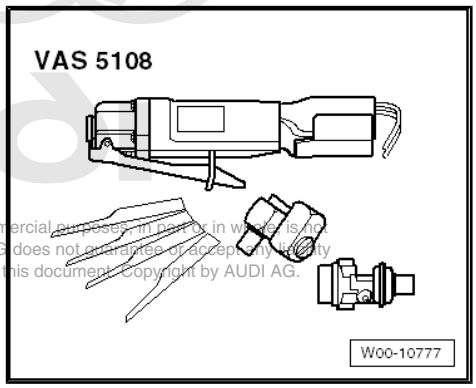

6.3 Procedure

Note

- *The Audi A8 employs flow-drill screws which can be renewed using socket for flow-drill screws - VAS 6426- or -6426/1- and 6426/2 .*
- *Repairing joints with flow-drill screws* ⇒ page 4

Cutting locations

Permitted separating cuts on complete side panel ⇒ page 116 .

– Make separating cut as shown using body saw .
– Make separating cuts at side member as shown using body saw ; take care not to damage inner side member.
– Separate original joint using rechargeable riveter - VAS 5279 A- or compact booster - VAS 6790- . For attachments see ⇒ page 15 .
– Remove flow-drill screws and separate joints using socket for flow-drill screws - VAS 6426 - .
– Separate laser weld -a- using compact angle grinder .

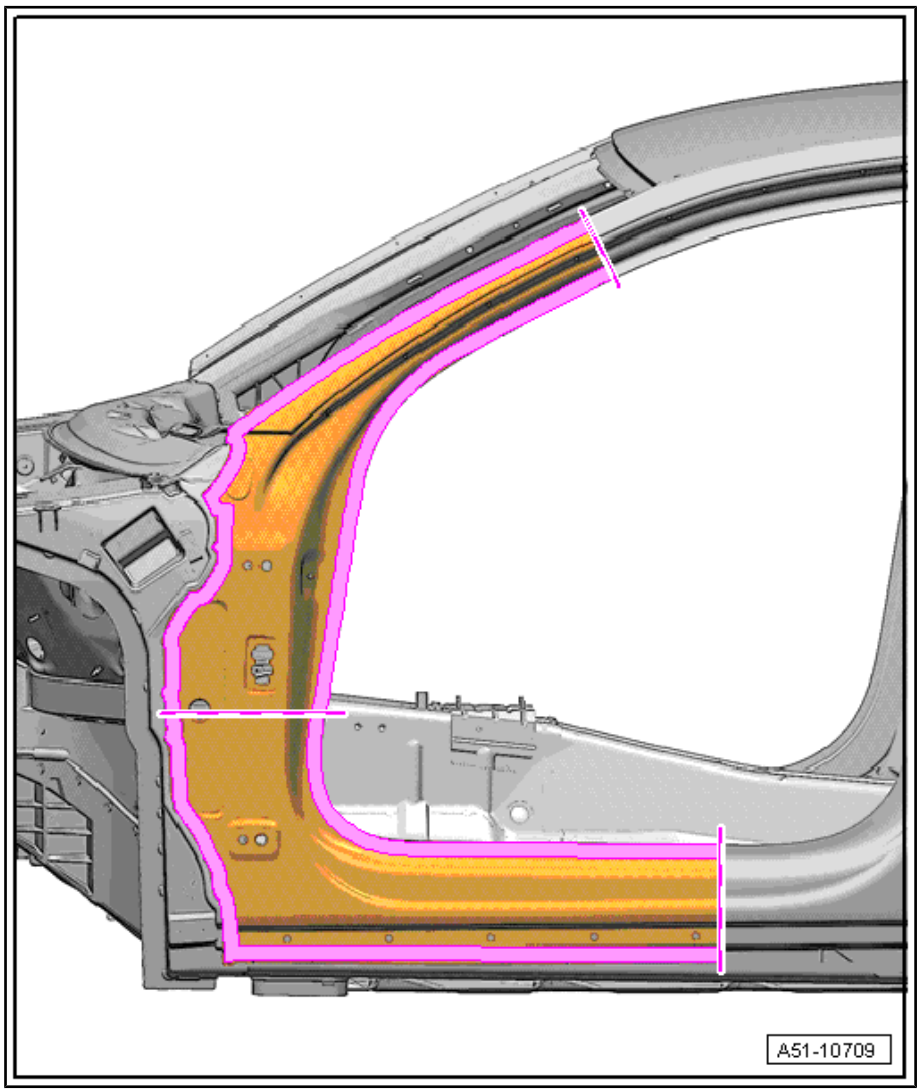

– Remove remaining material using compact angle grinder .

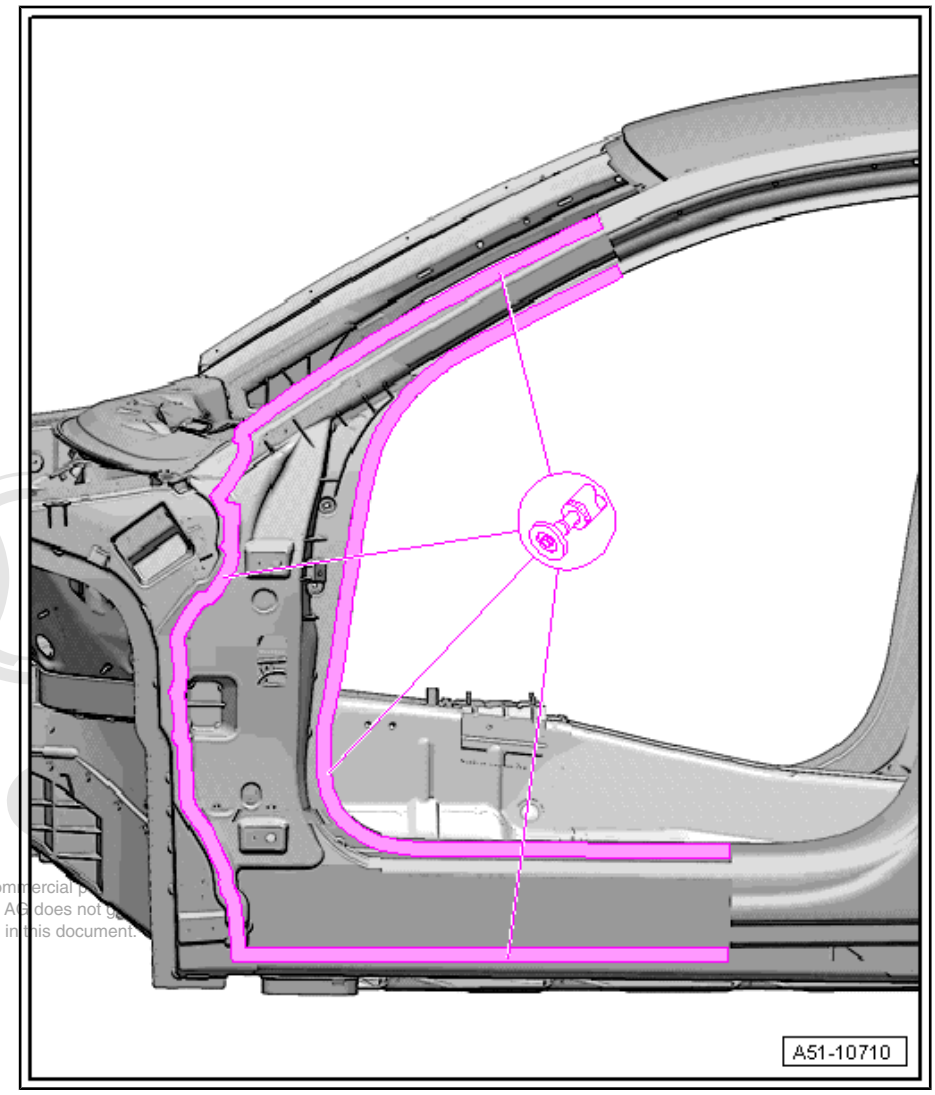

Replacement parts

- ♦ Pop rivets
- ♦ A-pillar (sub-part)
- ♦ Punch rivet

– Transfer separating cut to new part and cut to shape using body saw .

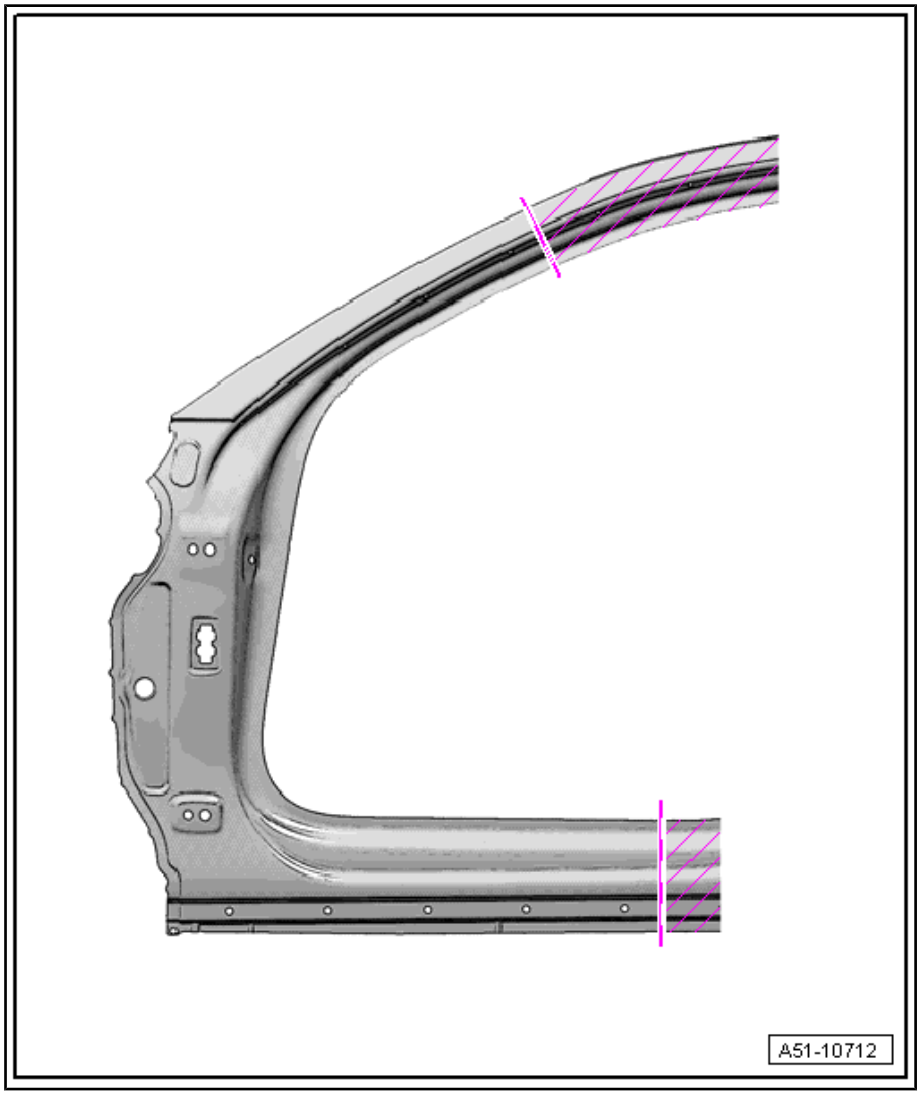

Preparing new parts

– Weld in weld pool backing to body side of joint -a-.

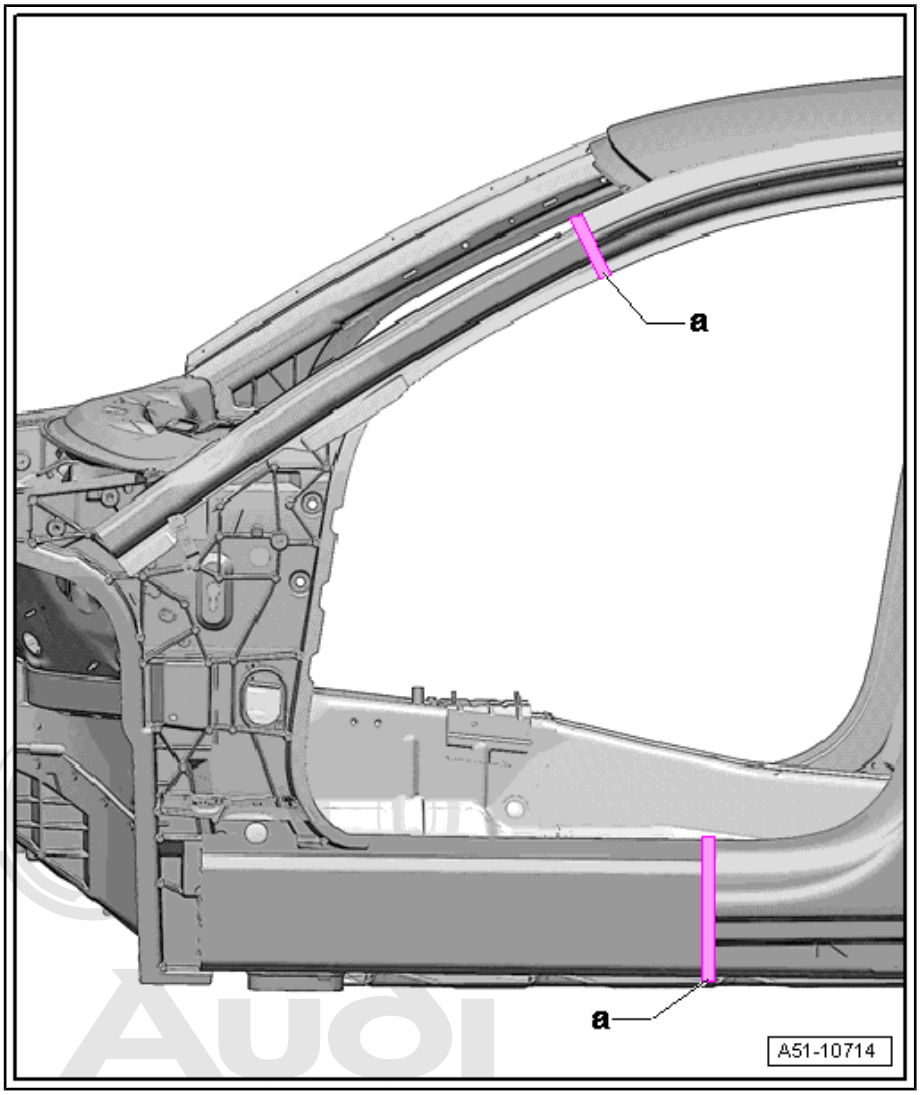

Preparing joints for adhesive application

- Prepare new part for riveting.
- Clean bonding surfaces with cleaning solution - D 009 401 04- .
- Prepare bonding area with silicate stone - DA 009 800 - and clean.
- Apply aluminium primer - DA 009 801 - to bonding surfaces using applicator - D 009 500 25 - .
- Apply 2-component body adhesive - DA 001 730 A2- to entire riveting area using pneumatic glue gun - V.A.G 2005 B- .
- Prepare flanges on body and new parts for welding.
- Apply adhesive.

Riveting in

- Fix outer A-pillar on portal gauge.
- Rivet in outer A-pillar using rechargeable riveter - VAS 5279 A- or compact booster - VAS 6790 - . For attachments see ⇒ page 15 .

– Weld in outer A-pillar using shielded arc welding equipment : SG continuous seam (staggered - with gaps).
– Secure original joints -a- with flow-drill screws using socket for flow-drill screws - VAS 6426 - ⇒ page 4 .

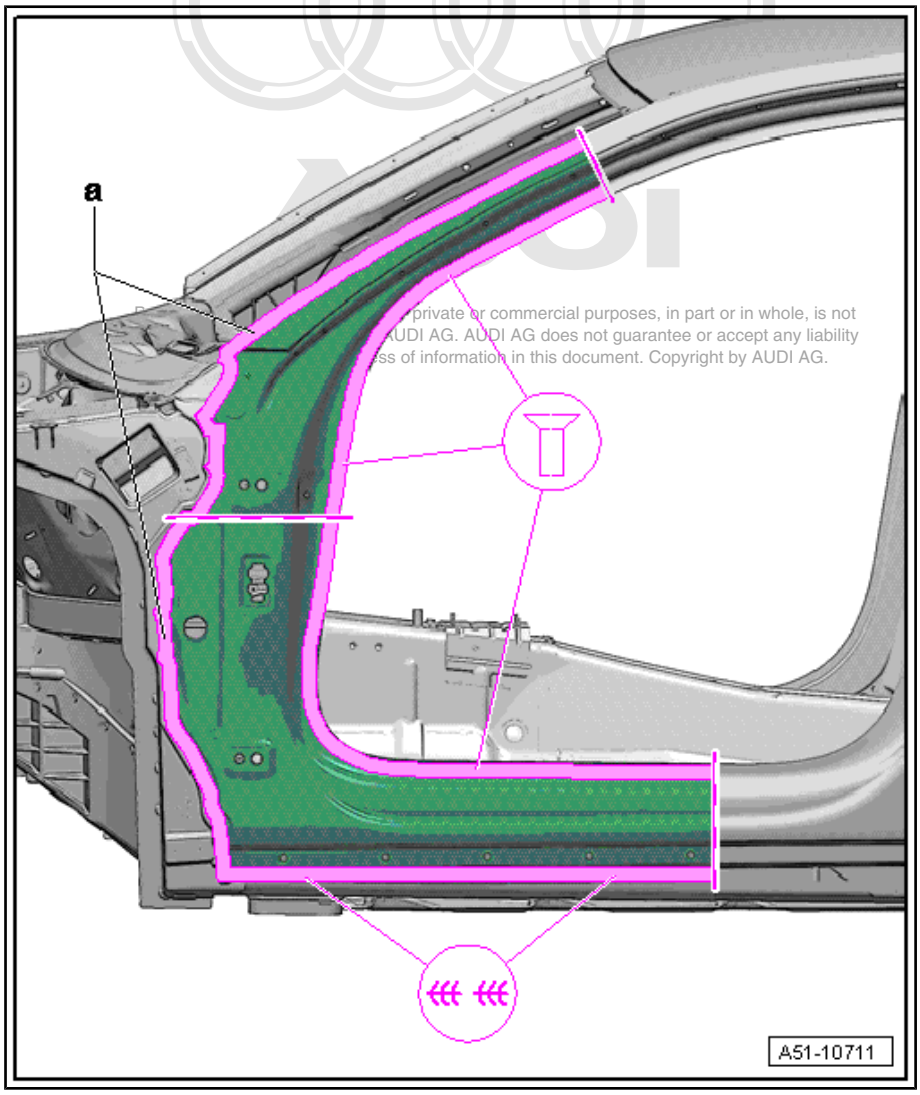

Welding in

– Weld in at separating cuts using shielded arc welding equipment : SG continuous seam.

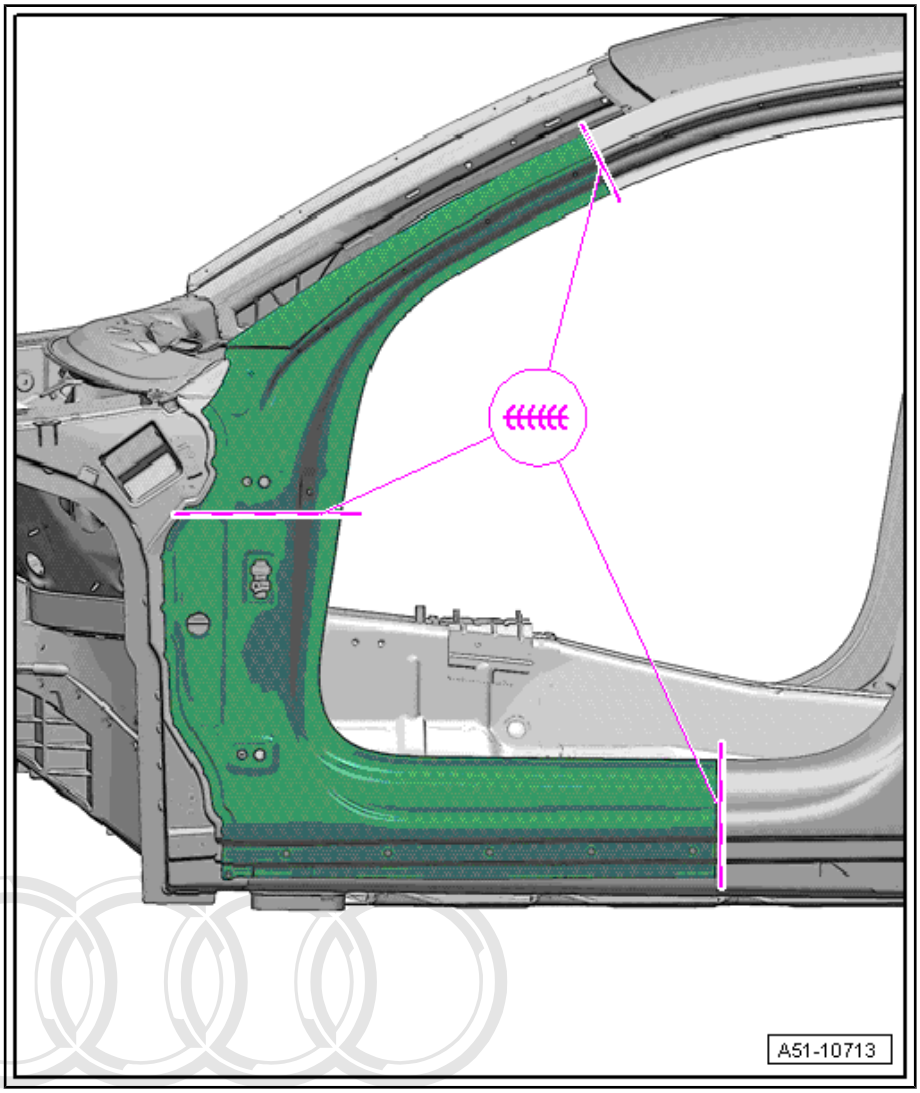

RO: 51 38 55 50

7 Inner A-pillar - Renewal

1 - Inner A-pillar

2 - Upper roof side member

3 - Inner side member

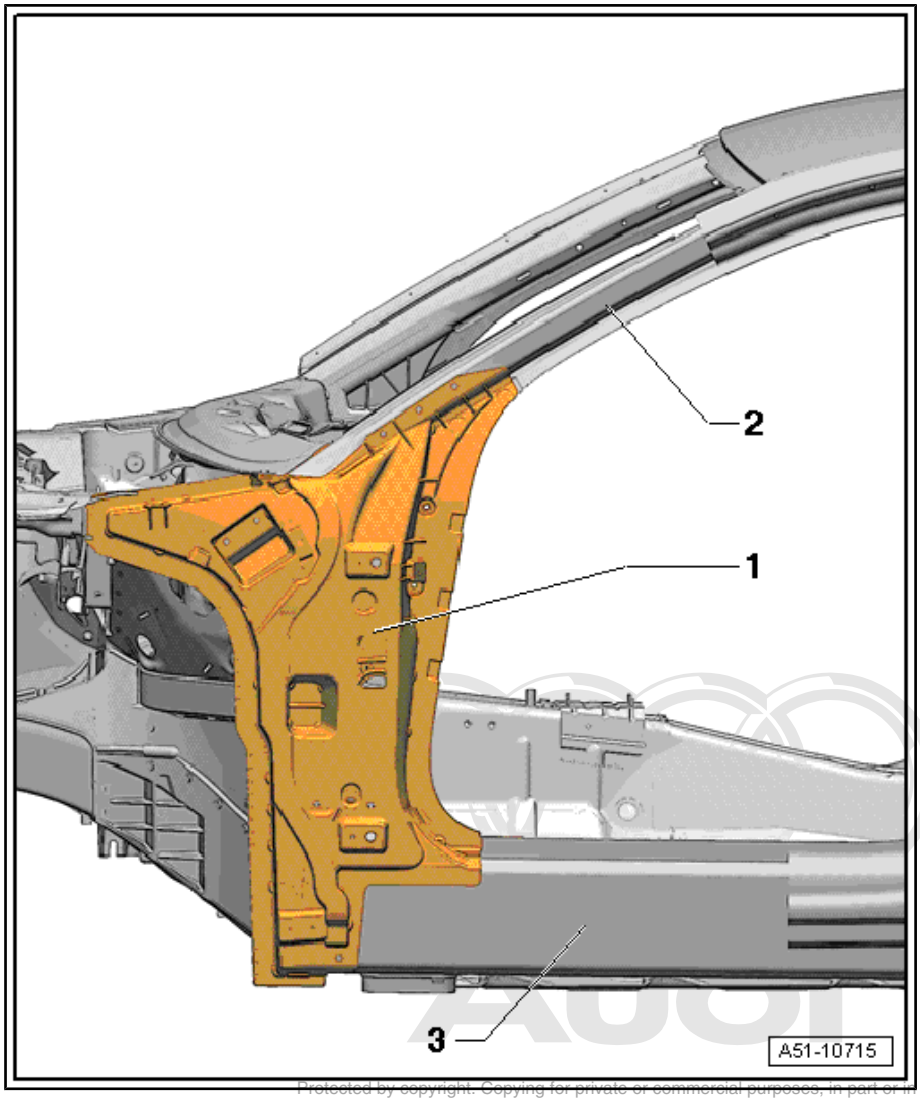

7.1 Notes for vehicles with hybrid drive

WARNING

Safety hazard: the engine can start unexpectedly.

Before carrying out general work on a vehicle with high-voltage electrical system, switch off the ignition and remove the ignition key from the vehicle.

DANGER!

When working on a vehicle with the ignition switched on or while the drive system is active, the engine can start unexpectedly and exhaust fumes can cause a health hazard in closed rooms. Moving parts can trap or draw in parts of the body and/or clothing (safety hazard).

Before switching on the ignition, perform the following steps:

- *Move selector lever to position P*
- *Activate parking brake*
- *Switch off ignition*
- *Open bonnet*
- *Connect battery charger (e.g. - VAS 5095A-) to jump-start connections of 12 V electrical system.*
- *Switch on ignition*

WARNING

Working on vehicles with high-voltage wiring:

- *Do not support yourself or tools on high-voltage wiring or associated components --> this can damage the insulation.*
- *High-voltage wiring must not be excessively bent or kinked --> this can damage the insulation.*
- *The round high-voltage connectors are colour-coded with an external coloured ring and are provided with mechanical coding or guide lugs. It is important to observe this coding when joining up the round high-voltage connectors; otherwise the connectors can be damaged.*

DANGER!

Risk of fatal injury if high-voltage components are damaged.

Observe the following when working in the vicinity of high-voltage components or wiring:

- *It is not permitted to use cutting or forming tools, other sharp-edged tools or heat sources such as welding, brazing, soldering, hot air or thermal bonding equipment.*
- *Before starting work, visually inspect the high-voltage components in the areas involved.*
- *Before working in the engine compartment, visually inspect the power and control electronics for electric drive - JX1- , electric drive motor - V141- , air conditioner compressor - V470- and high-voltage wiring.*
- *Before working on the vehicle underbody, visually inspect the high-voltage wiring and covers.*
- *Before working on the rear section of the vehicle, visually inspect the high-voltage wiring and the hybrid battery unit with the maintenance connector for high-voltage system - TW - .*
- *Visually inspect all potential equalisation lines.*

Check the following when making the visual inspection:

- *There must be no external damage on any component.*
- *The insulation of the high-voltage wiring and potential equalisation lines must not be damaged.*
- *There must be no unusual deformation of the high-voltage wiring.*
- *All high-voltage components must be identified by a red warning sticker.*

DANGER!

High voltage can cause fatal injury.

Danger of severe or fatal injuries from electric shock.

- *The high-voltage system may only be re-energised by a suitably qualified person (Audi high-voltage technician).*
- *The system may only be re-energised using the vehicle diagnostic tester via "Guided Fault Finding".*
- *The vehicle is then made ready for operation again by the qualified person (Audi high-voltage technician).*
- *The qualified person (Audi high-voltage technician) marks the vehicle by attaching the appropriate warning signs.*

DANGER!

High voltage can cause fatal injury.

Danger of severe or fatal injuries from electric shock.

- *The high-voltage system may only be de-energised by a suitably qualified person (Audi high-voltage technician).*
- *It must be definitely confirmed that the high-voltage system is de-energised. The system may only be de-energised using the vehicle diagnostic tester via "Guided Fault Finding".*
- *The qualified person (Audi high-voltage technician) confirms that the system is de-energised and ensures that it cannot be re-energised by fitting the locking cap - T40262- and by storing the ignition key and the maintenance connector for high-voltage system - TW - in a safe place.*
- *The qualified person (Audi high-voltage technician) marks the vehicle by attaching the appropriate warning signs.*

Note

Please refer to the Electronic parts catalogue when ordering replacement parts.

WARNING

Accidents can be caused if the driver is distracted by test equipment while road-testing, or if test equipment is not properly secured.

Injuries can be caused if the passenger's airbag is triggered in a collision.

- *The use of test equipment while driving causes distraction.*
- *There is an increased risk of injury if test equipment is not secured.*
- *Move the front passenger's seat back as far as it will go.*
- *Use only the vehicle diagnostic and service information system - VAS 5052- or the diagnostic system - VAS 5053- .*
- *The test equipment -1- must rest flat on the passenger's thighs (as shown in illustration) and must be operated by the passenger.*

7.2 Tools

Special tools and workshop equipment required

- Compact angle grinder - VAS 5167-
- Socket for flow-drill screws - VAS 6426 -
- Drill - VAS 5144-
- Compact booster - VAS 6790-

- Pop rivet nut pliers - V.A.G 1765 B-

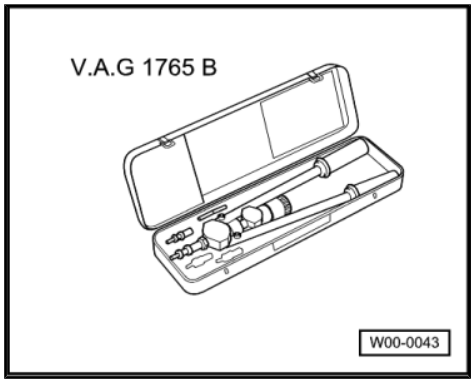

- Shielded arc welding equipment - VAS 6388-
- Rechargeable riveter - VAS 5279 A-
- Alternatively, you can use the rechargeable riveter - VAS 5279 B- . This is a complete set.

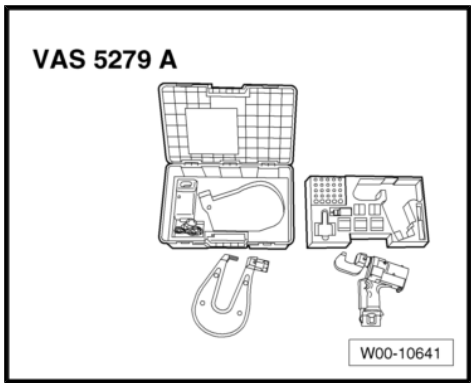

7.3 Procedure

Note

- *The Audi A8 employs flow-drill screws which can be renewed using socket for flow-drill screws - VAS 6426- or -6426/1- and 6426/2 .*
- *Repairing joints with flow-drill screws* ⇒ page 4

Cutting locations

- Outer A-pillar removed ⇒ page 167

– Separate original joint using rechargeable riveter - VAS 5279 A- or compact booster - VAS 6790- . For attachments see ⇒ page 15 .

– Remove flow-drill screws and separate joints -a- using socket for flow-drill screws - VAS 6426 - .

– Release inaccessible rivets -b- using dent remover for aluminium vehicles - VAS 5196- .

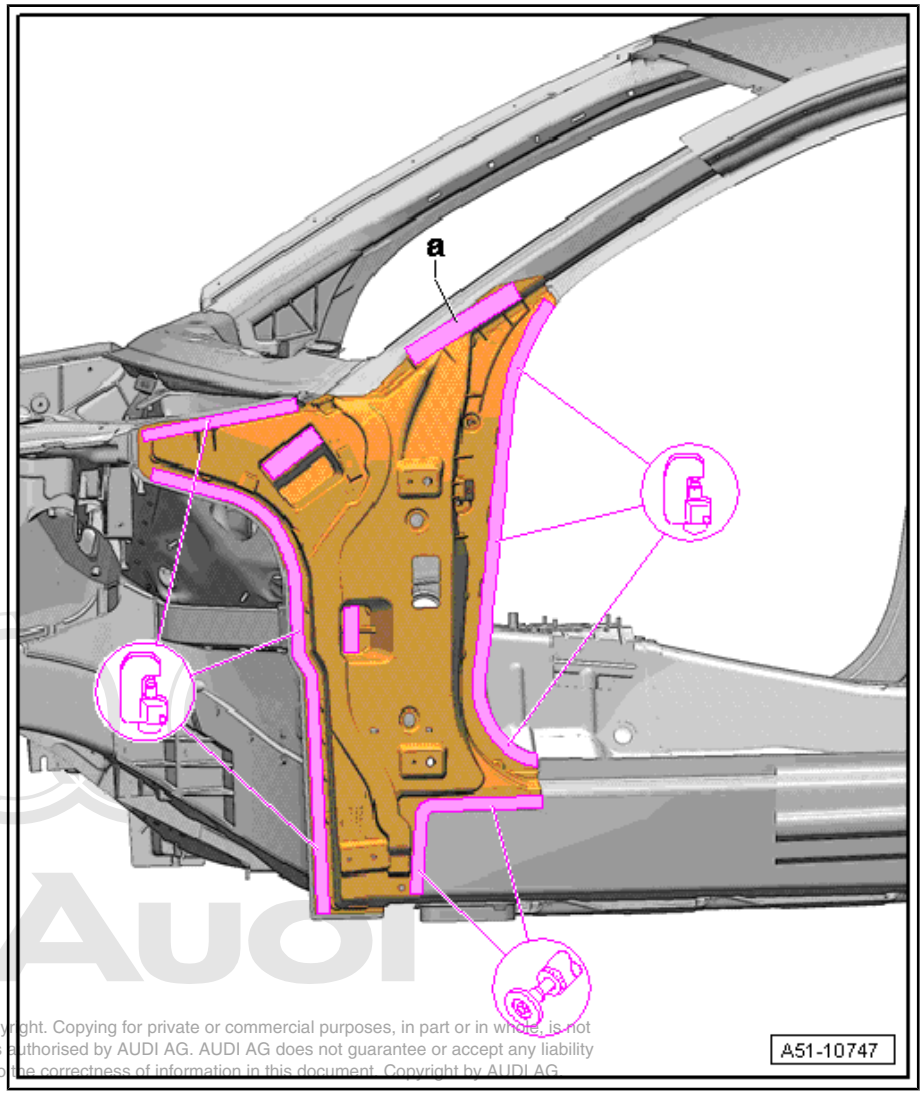

– Use drill to drill holes for bolts engaging in pop rivet nuts.

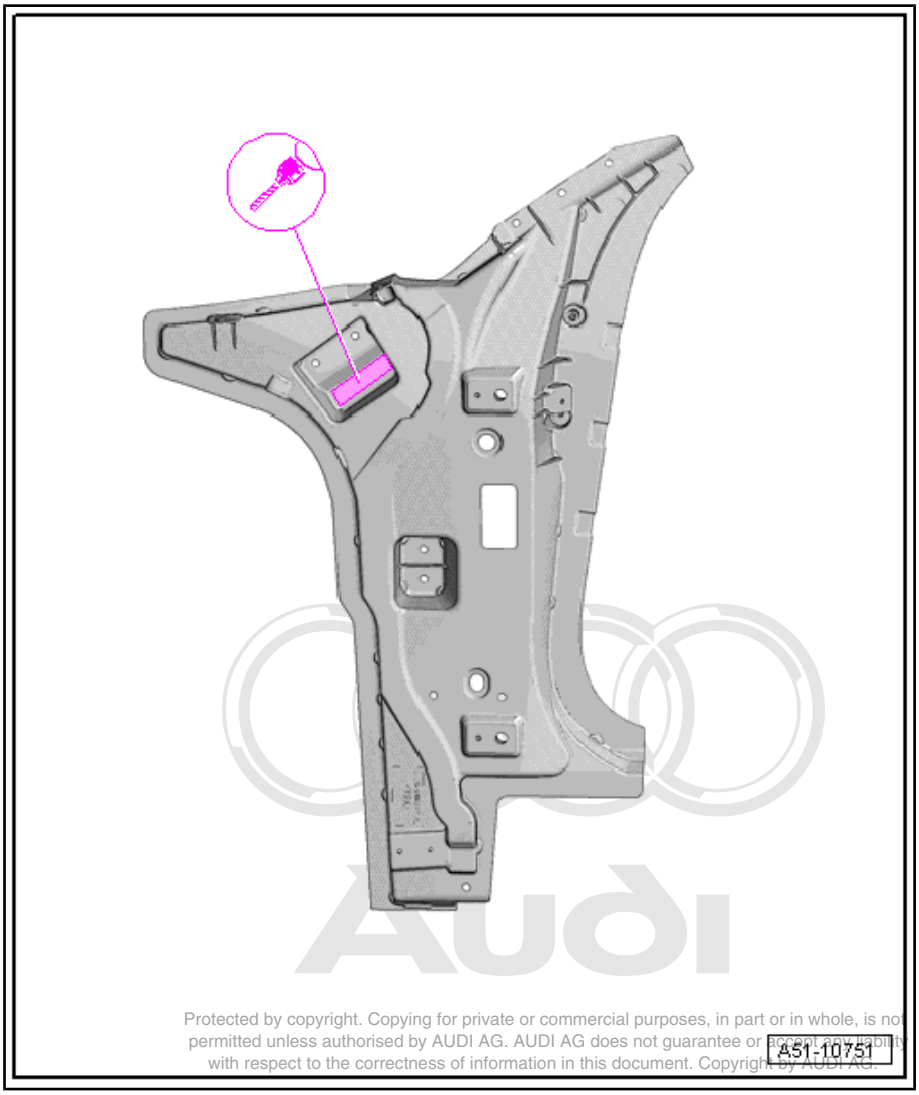

– Remove remaining material using compact angle grinder .
– Drill holes for pop rivet nuts using drill .
– Fit pop rivet nuts using pop rivet nut pliers - V.A.G 1765 B- .

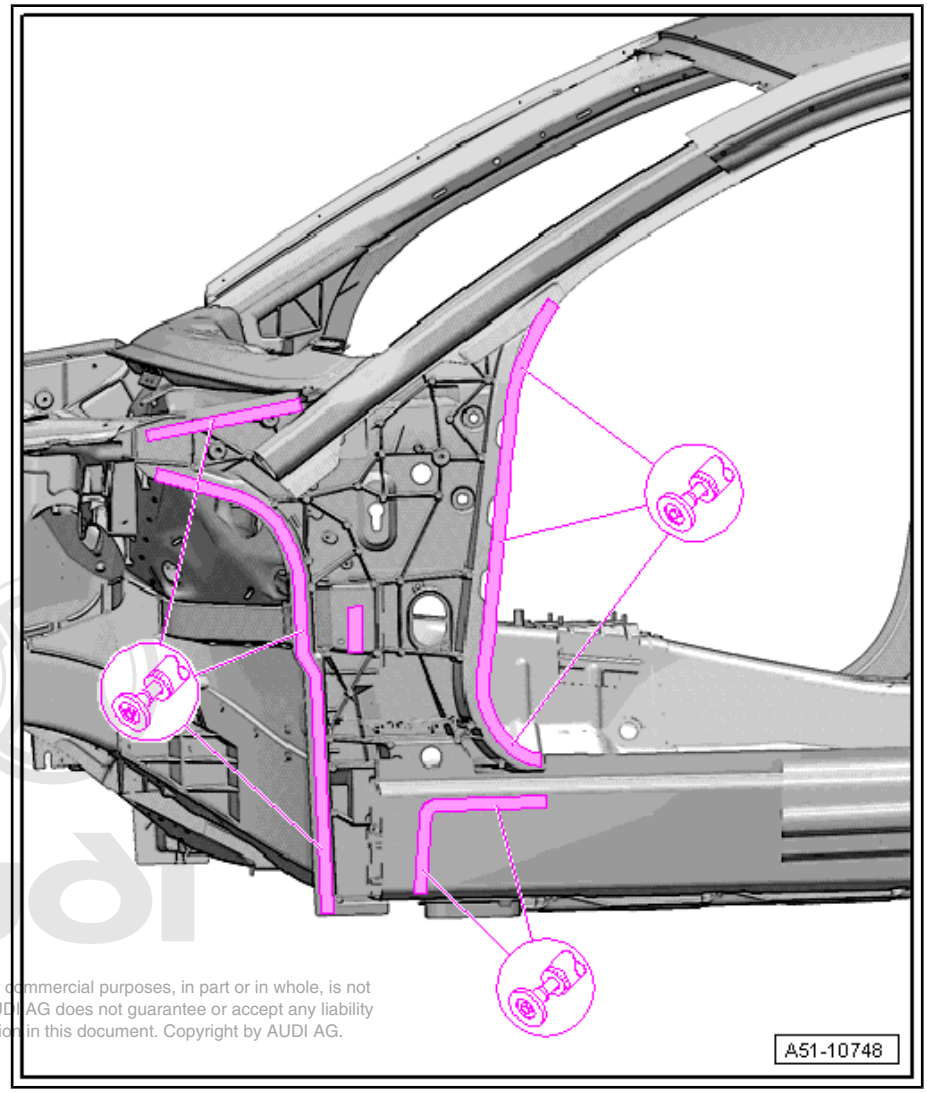

Riveting in

- Rivet in inner A-pillar using rechargeable riveter - VAS 5279 A- or compact booster - VAS 6790 - . For attachments see ⇒ page 15 .
- Weld in inner A-pillar using shielded arc welding equipment : SG continuous seam.
- Secure joint with flow-drill screws using socket for flow-drill screws - VAS 6426 - ⇒ page 4 .

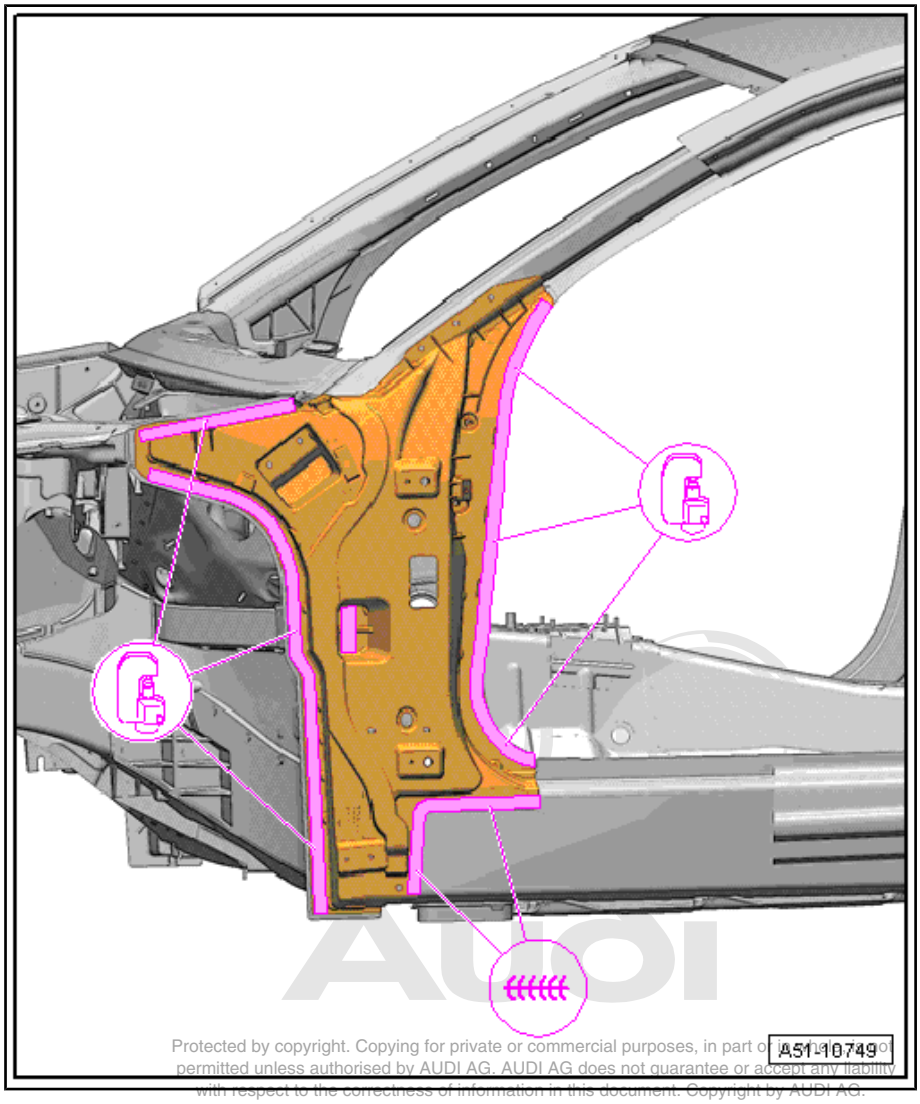

- Welding in outer A-pillar ⇒ page 167

RO: 51 41 55 00

8 Outer B-pillar - Renewal

1 - B-pillar

Outer B-pillar

2 - Separating cut in B-pillar (top)

3 - Separating cut in B-pillar (bottom)

4 - Side frame

5 - Separating cut in side member (rear)

6 - Separating cut in side member (front)

7 - Front side member

8 - Rear side member

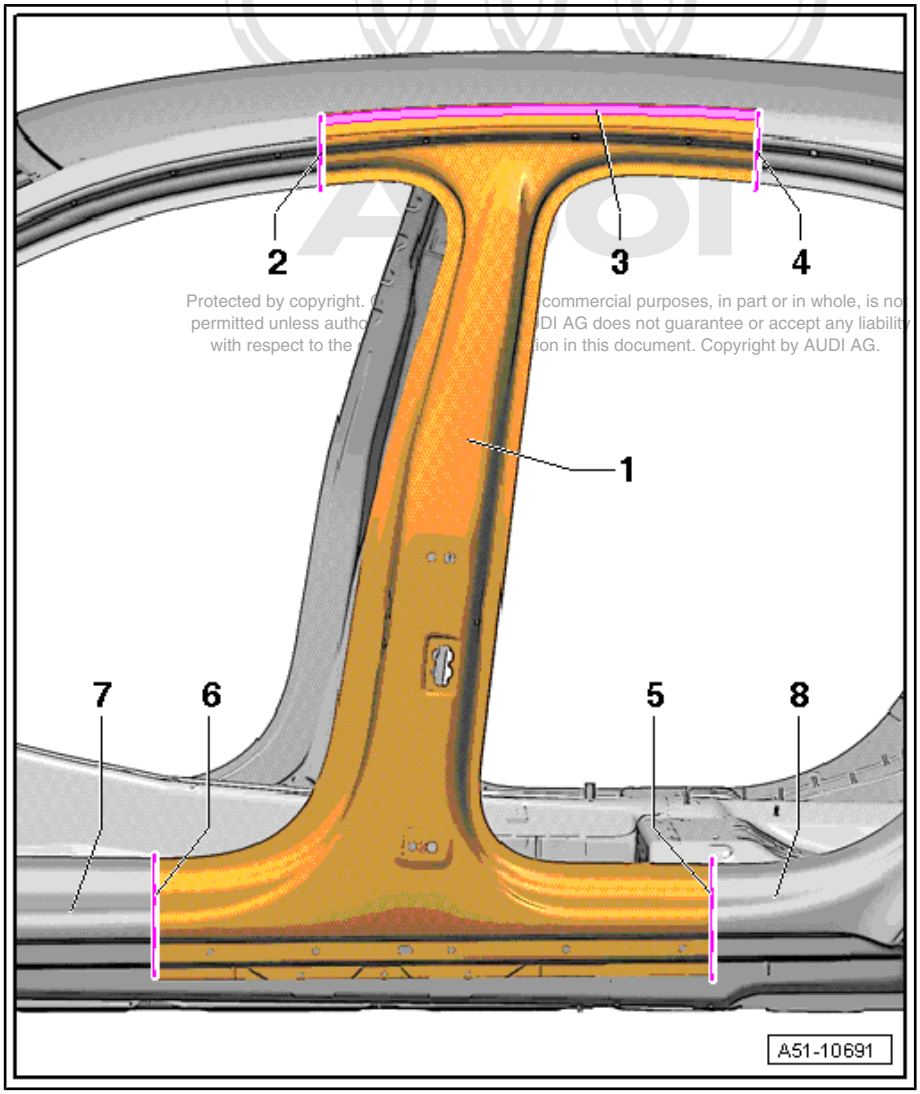

8.1 Notes for vehicles with hybrid drive

WARNING

Safety hazard: the engine can start unexpectedly.

Before carrying out general work on a vehicle with high-voltage electrical system, switch off the ignition and remove the ignition key from the vehicle.

DANGER!

When working on a vehicle with the ignition switched on or while the drive system is active, the engine can start unexpectedly and exhaust fumes can cause a health hazard in closed rooms. Moving parts can trap or draw in parts of the body and/or clothing (safety hazard).

Before switching on the ignition, perform the following steps:

- *Move selector lever to position P*
- *Activate parking brake*
- *Switch off ignition*
- *Open bonnet*
- *Connect battery charger (e.g. - VAS 5095A-) to jump-start connections of 12 V electrical system.*
- *Switch on ignition*

WARNING

Working on vehicles with high-voltage wiring:

- *Do not support yourself or tools on high-voltage wiring or associated components --> this can damage the insulation.*
- *High-voltage wiring must not be excessively bent or kinked --> this can damage the insulation.*
- *The round high-voltage connectors are colour-coded with an external coloured ring and are provided with mechanical coding or guide lugs. It is important to observe this coding when joining up the round high-voltage connectors; otherwise the connectors can be damaged.*

DANGER!

Risk of fatal injury if high-voltage components are damaged.

Observe the following when working in the vicinity of high-voltage components or wiring:

- *It is not permitted to use cutting or forming tools, other sharp-edged tools or heat sources such as welding, brazing, soldering, hot air or thermal bonding equipment.*
- *Before starting work, visually inspect the high-voltage components in the areas involved.*
- *Before working in the engine compartment, visually inspect the power and control electronics for electric drive - JX1- , electric drive motor - V141- , air conditioner compressor - V470- and high-voltage wiring.*
- *Before working on the vehicle underbody, visually inspect the high-voltage wiring and covers.*
- *Before working on the rear section of the vehicle, visually inspect the high-voltage wiring and the hybrid battery unit with the maintenance connector for high-voltage system - TW - .*
- *Visually inspect all potential equalisation lines.*

Check the following when making the visual inspection:

- *There must be no external damage on any component.*
- *The insulation of the high-voltage wiring and potential equalisation lines must not be damaged.*
- *There must be no unusual deformation of the high-voltage wiring.*
- *All high-voltage components must be identified by a red warning sticker.*

DANGER!

High voltage can cause fatal injury.

Danger of severe or fatal injuries from electric shock.

- *The high-voltage system may only be re-energised by a suitably qualified person (Audi high-voltage technician).*
- *The system may only be re-energised using the vehicle diagnostic tester via "Guided Fault Finding".*
- *The vehicle is then made ready for operation again by the qualified person (Audi high-voltage technician).*
- *The qualified person (Audi high-voltage technician) marks the vehicle by attaching the appropriate warning signs.*

DANGER!

High voltage can cause fatal injury.

Danger of severe or fatal injuries from electric shock.

- *The high-voltage system may only be de-energised by a suitably qualified person (Audi high-voltage technician).*
- *It must be definitely confirmed that the high-voltage system is de-energised. The system may only be de-energised using the vehicle diagnostic tester via "Guided Fault Finding".*
- *The qualified person (Audi high-voltage technician) confirms that the system is de-energised and ensures that it cannot be re-energised by fitting the locking cap - T40262- and by storing the ignition key and the maintenance connector for high-voltage system - TW - in a safe place.*
- *The qualified person (Audi high-voltage technician) marks the vehicle by attaching the appropriate warning signs.*

Note

Please refer to the Electronic parts catalogue when ordering replacement parts.

WARNING

Accidents can be caused if the driver is distracted by test equipment while road-testing, or if test equipment is not properly secured.

Injuries can be caused if the passenger's airbag is triggered in a collision.

- *The use of test equipment while driving causes distraction.*
- *There is an increased risk of injury if test equipment is not secured.*
- *Move the front passenger's seat back as far as it will go.*
- *Use only the vehicle diagnostic and service information system - VAS 5052- or the diagnostic system - VAS 5053- .*
- *The test equipment -1- must rest flat on the passenger's thighs (as shown in illustration) and must be operated by the passenger.*

8.2 Tools

Special tools and workshop equipment required

- Compact angle grinder - VAS 5167-
- Compact booster - VAS 6790-

- Pop rivet pliers - VAS 5072-

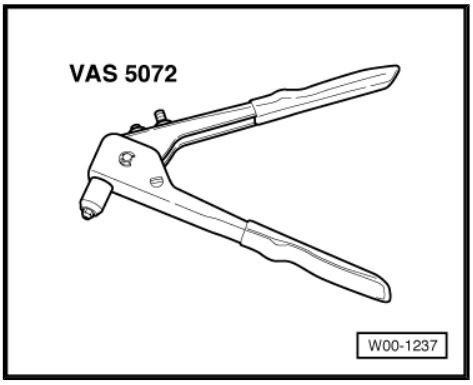

- Shielded arc welding equipment - VAS 6388-
- Pneumatic glue gun - V.A.G 2005 B-

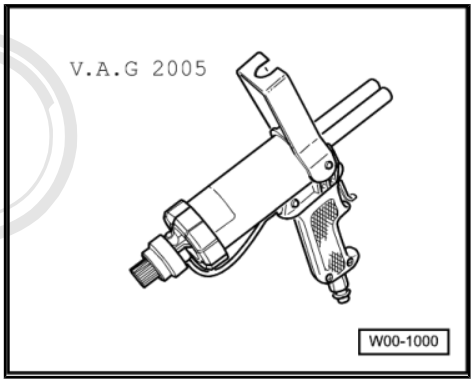

- Rechargeable riveter - VAS 5279 A-
- Alternatively, you can use the rechargeable riveter - VAS 5279 B- . This is a complete set.

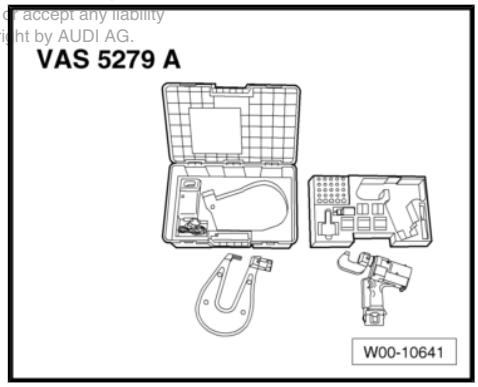

- Pneumatic jig-saw - VAS 5108 - or body saw - VAS 6598 - or -VAS 6780-

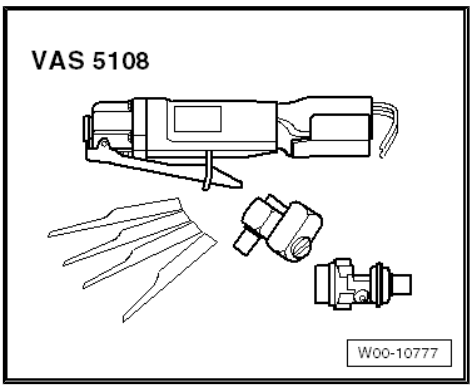

8.3 Procedure

Note

- *The Audi A8 employs flow-drill screws which can be renewed using socket for flow-drill screws - VAS 6426- or -6426/1- and 6426/2 .*
- *Repairing joints with flow-drill screws* ⇒ page 4

Cutting locations

Permitted separating cuts on complete side panel ⇒ page 116 .

– Make separating cuts according to dimensions -a and b- using body saw .

Dimension -a- = 80 mm

Dimension -b- = 70 mm

– Take care not to damage inner side member when making separating cuts in side member.

– Make separating cuts in B-pillar according to degree of damage.

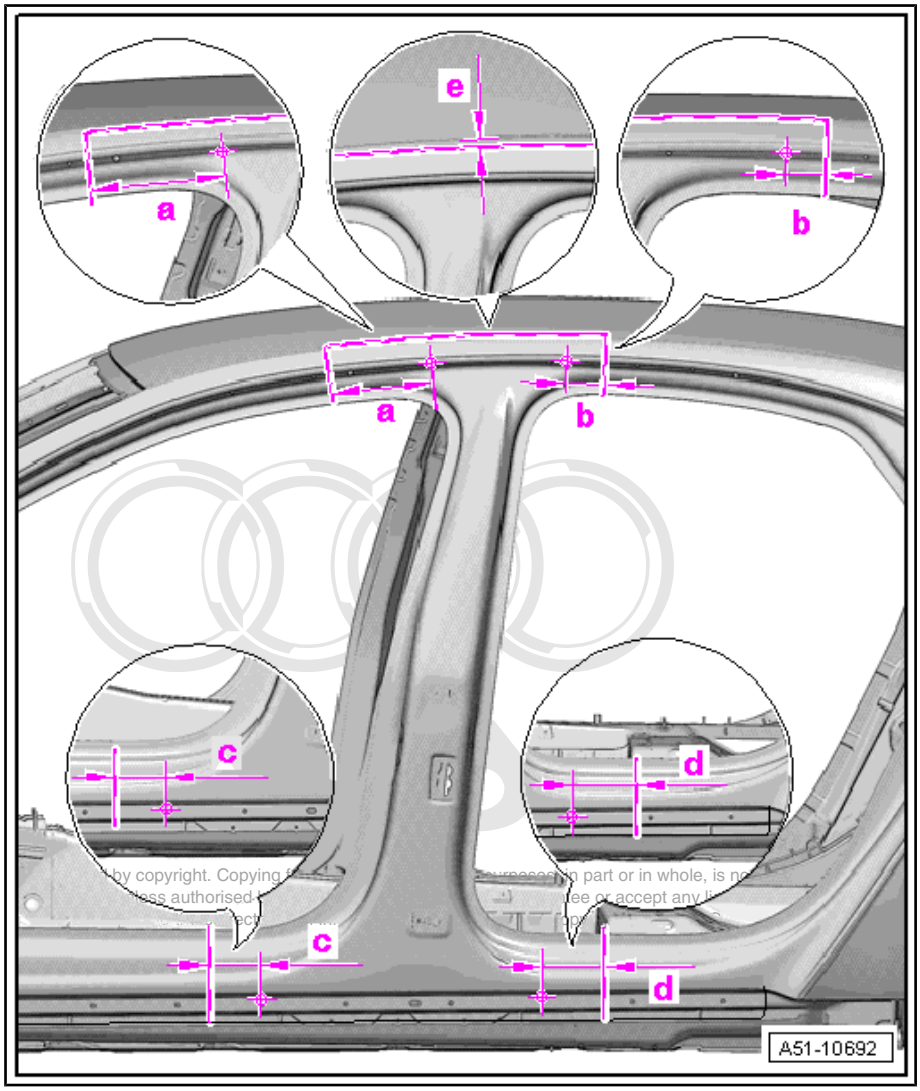

– Separate original joint using rechargeable riveter - VAS 5279 A- or compact booster - VAS 6790- . For attachments see ⇒ page 15 .

– Remove flow-drill screws and separate joints -a- using socket for flow-drill screws - VAS 6426 - .

Note

- *A partial renewal is possible using separating cuts -1-.*
- *Take care not to damage any panels behind when making the separating cuts.*

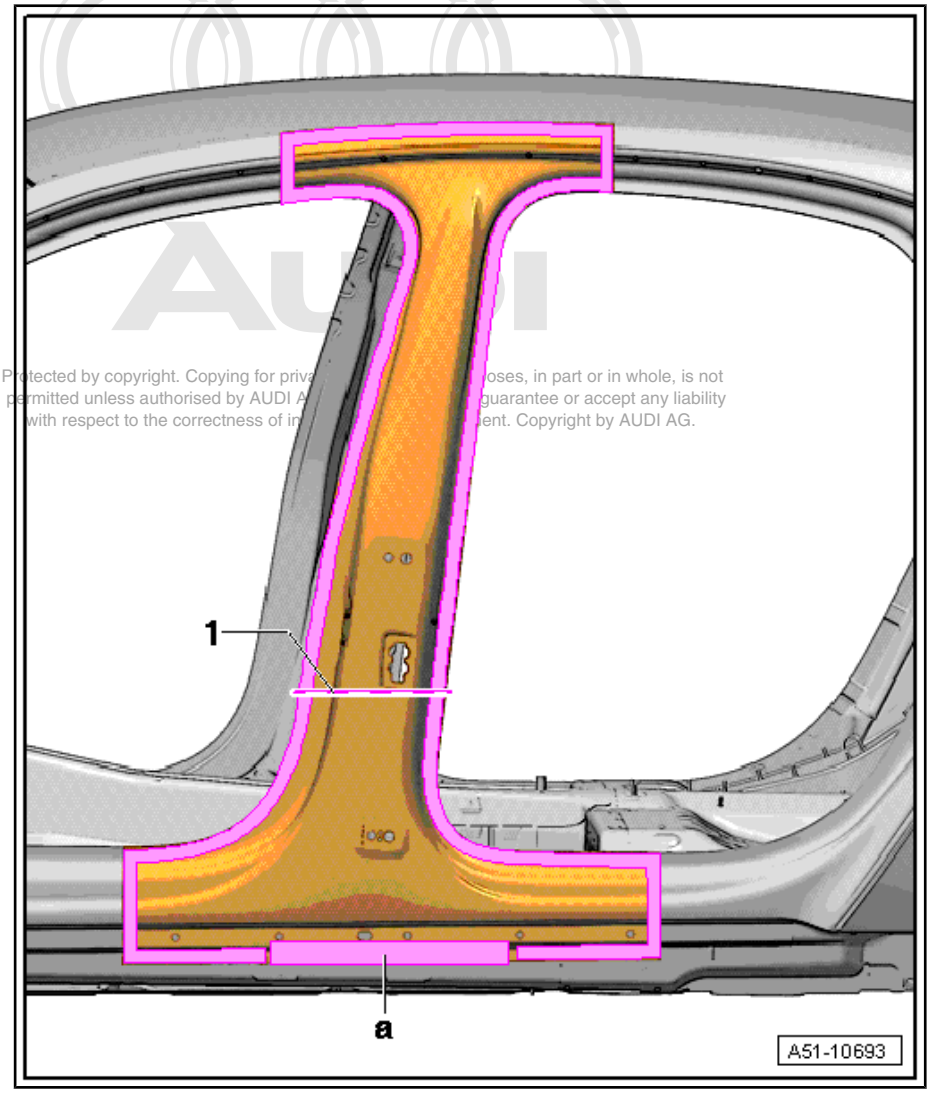

– Remove remaining material using compact angle grinder .

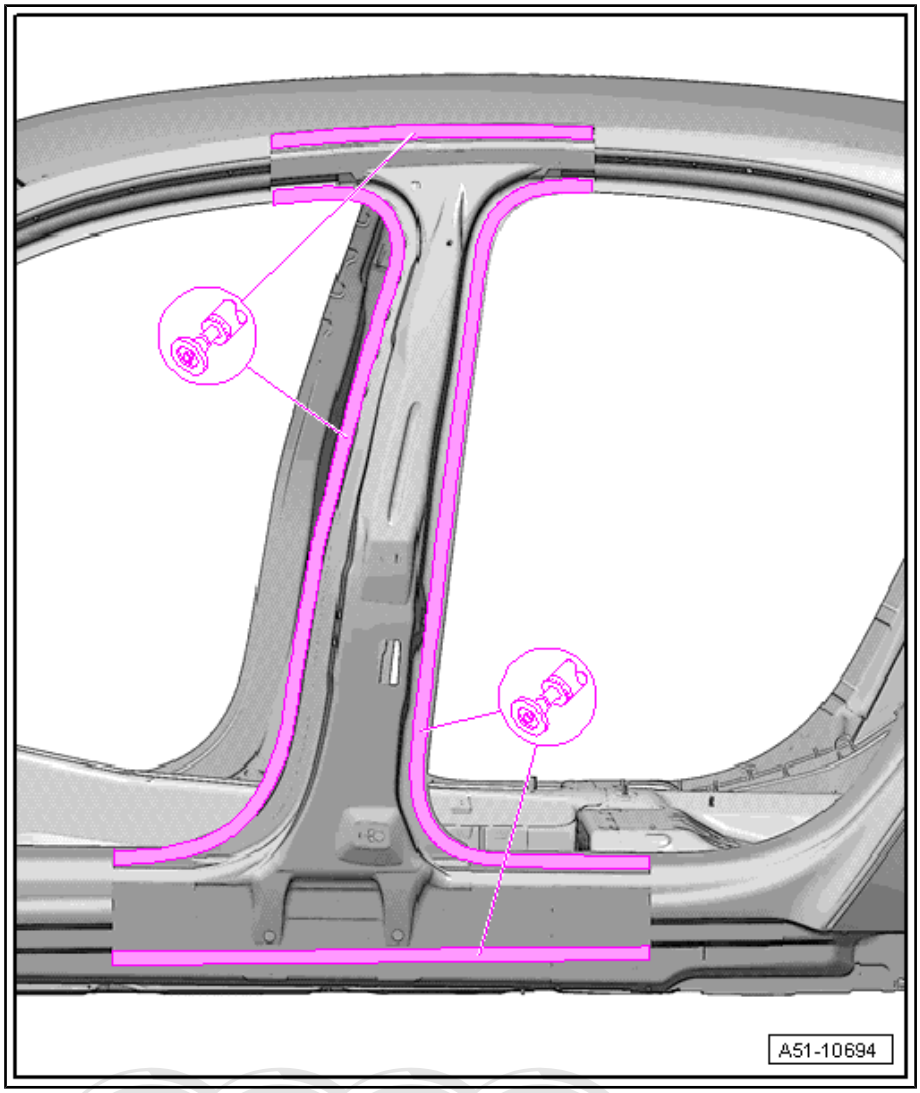

Replacement parts

- B-pillar (sub-part)
- Body adhesive - DA 001 730 A2-
- Punch rivets (self-piercing rivets)

Preparing new parts

– Transfer separating cuts to new part and cut to size using body saw .

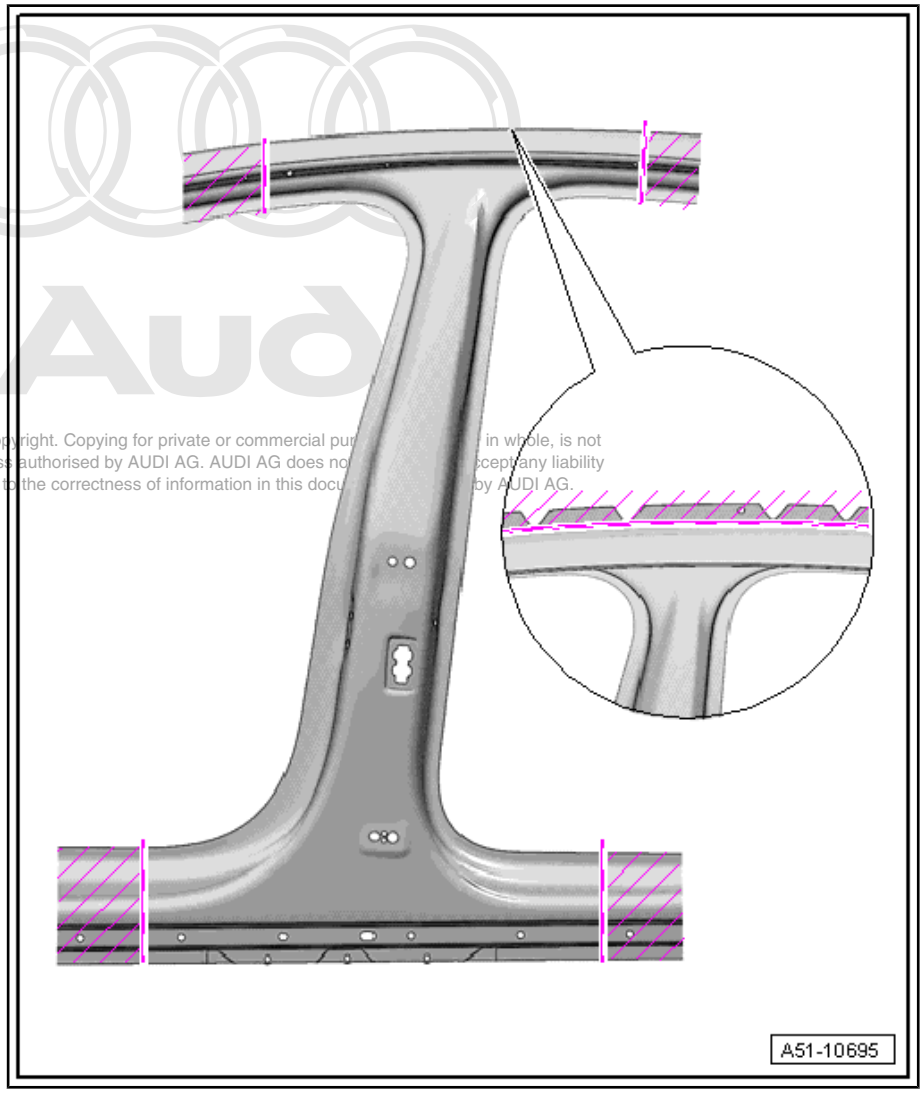

– Place weld pool backing plate of same material behind separating cuts.

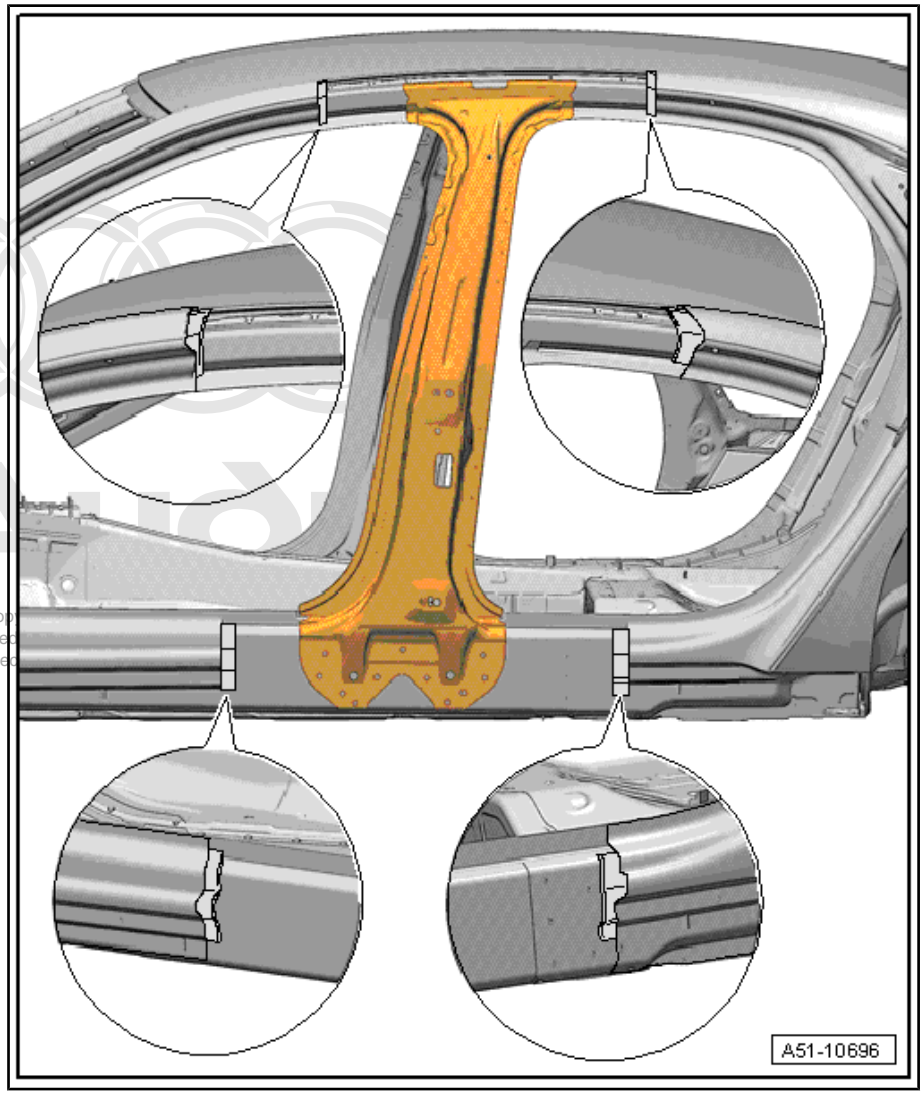

– Fit outer B-pillar and fix in position.

Note

Bolt on hinges and striker plate for better positioning.

Note

Refer to General information on bonding.

Preparing joints for adhesive application

– Prepare flanges on body and new parts for welding.
– Clean new part with cleaning solution - D 009 401 04- .
– Prepare bonding area with silicate stone - DA 009 800 - and clean.
– Apply aluminium primer - DA 009 801 - to bonding surfaces using applicator - D 009 500 25 - .
– Apply 2-component epoxy adhesive - DA 001 730 A2- to entire riveting area using pneumatic glue gun - V.A.G 2005 B - .

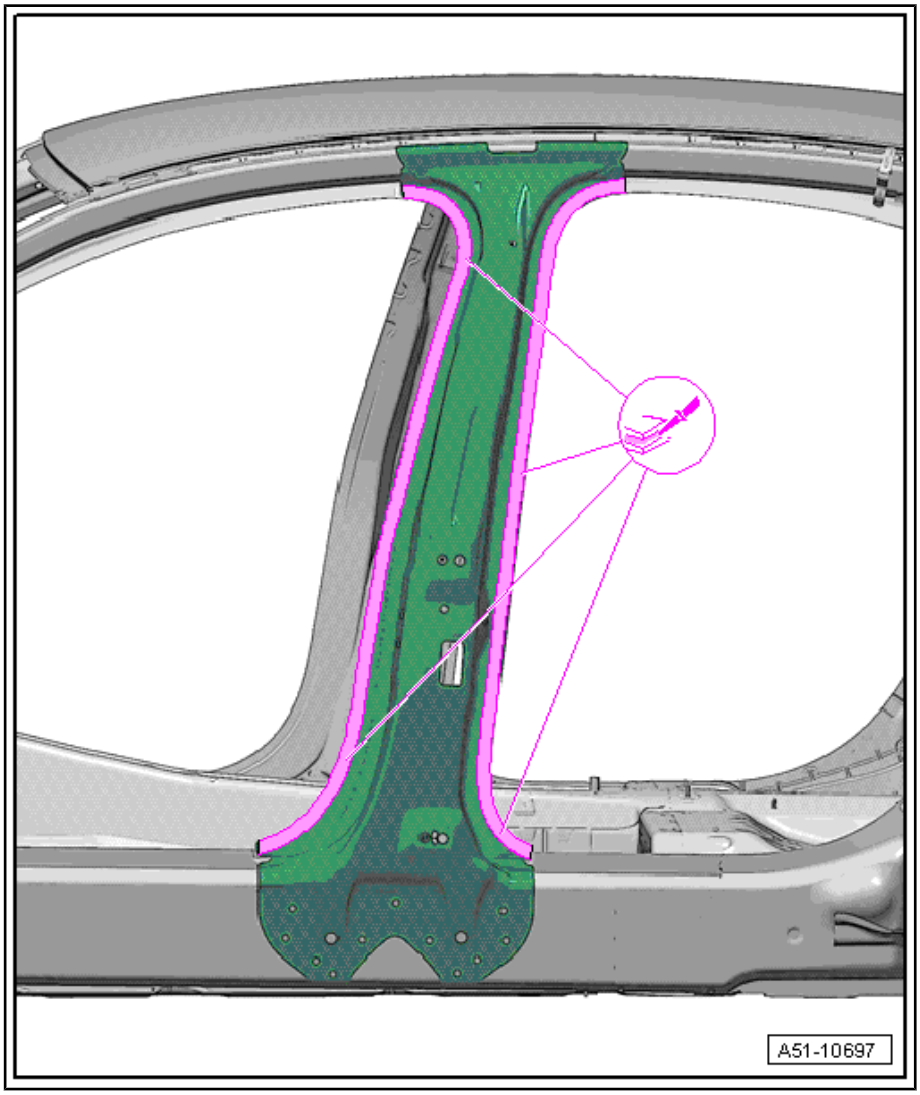

Riveting in

– Rivet in outer A-pillar using rechargeable riveter - VAS 5279 A- or compact booster - VAS 6790 - . For attachments see ⇒ page 15 .

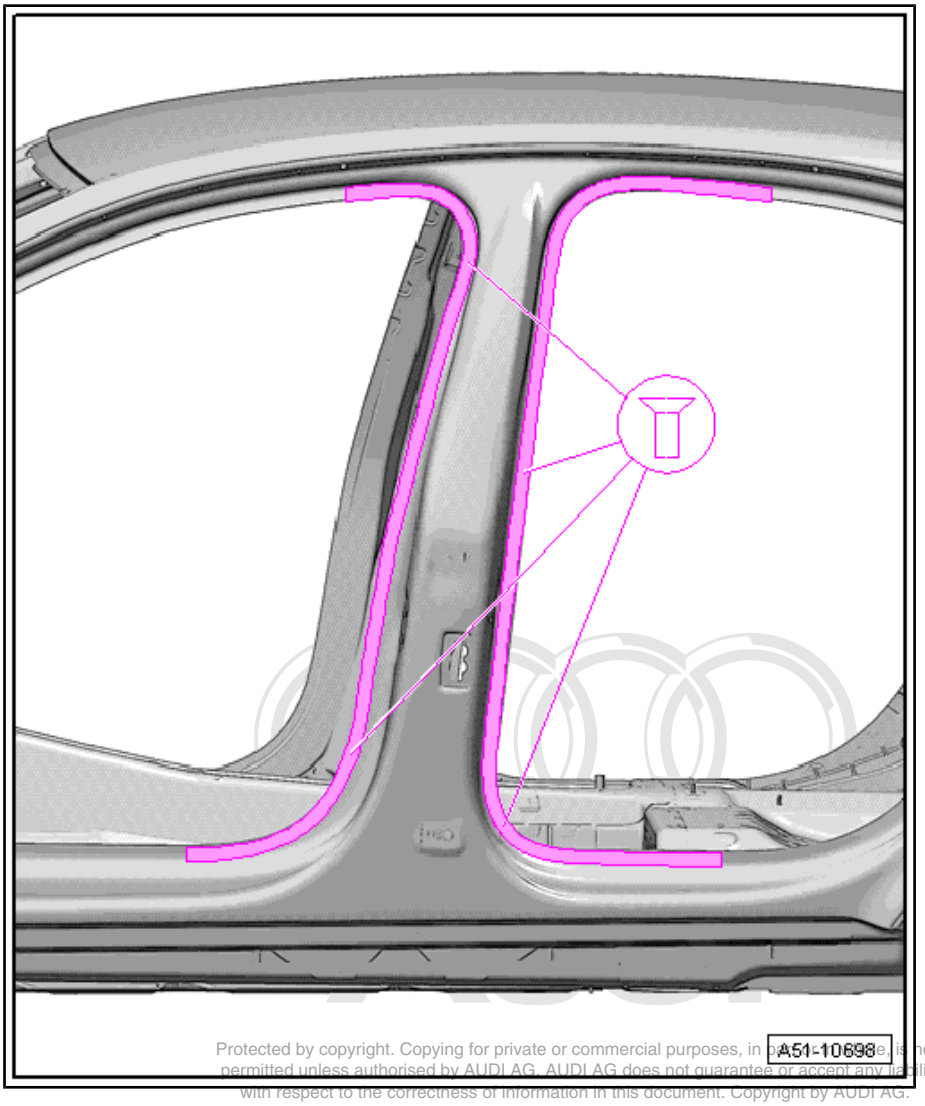

Welding in

– Weld in outer B-pillar using shielded arc welding equipment :
  SG continuous seam.

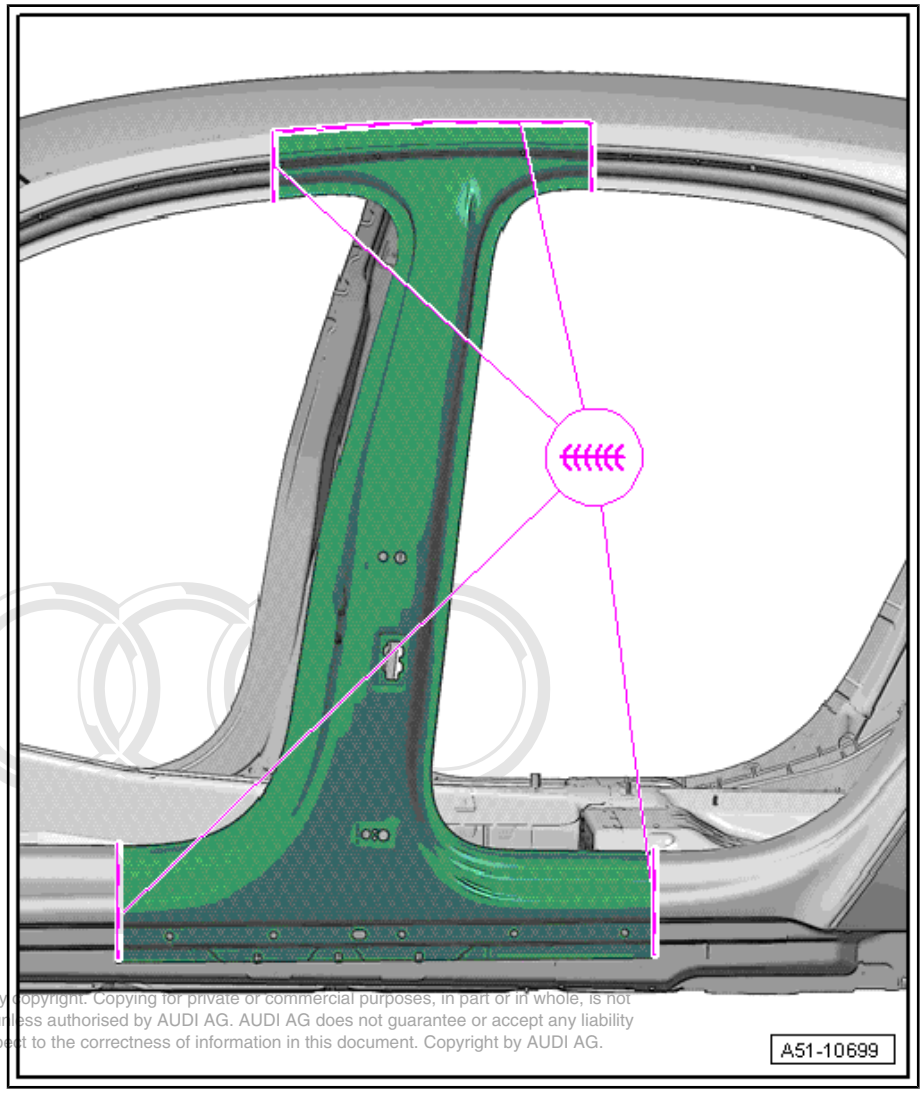

RO: 51 42 55 50

9 Inner B-pillar - Renewal

1 - Inner B-pillar
2 - Outer rear side member
3 - Side member
4 - Outer front side member

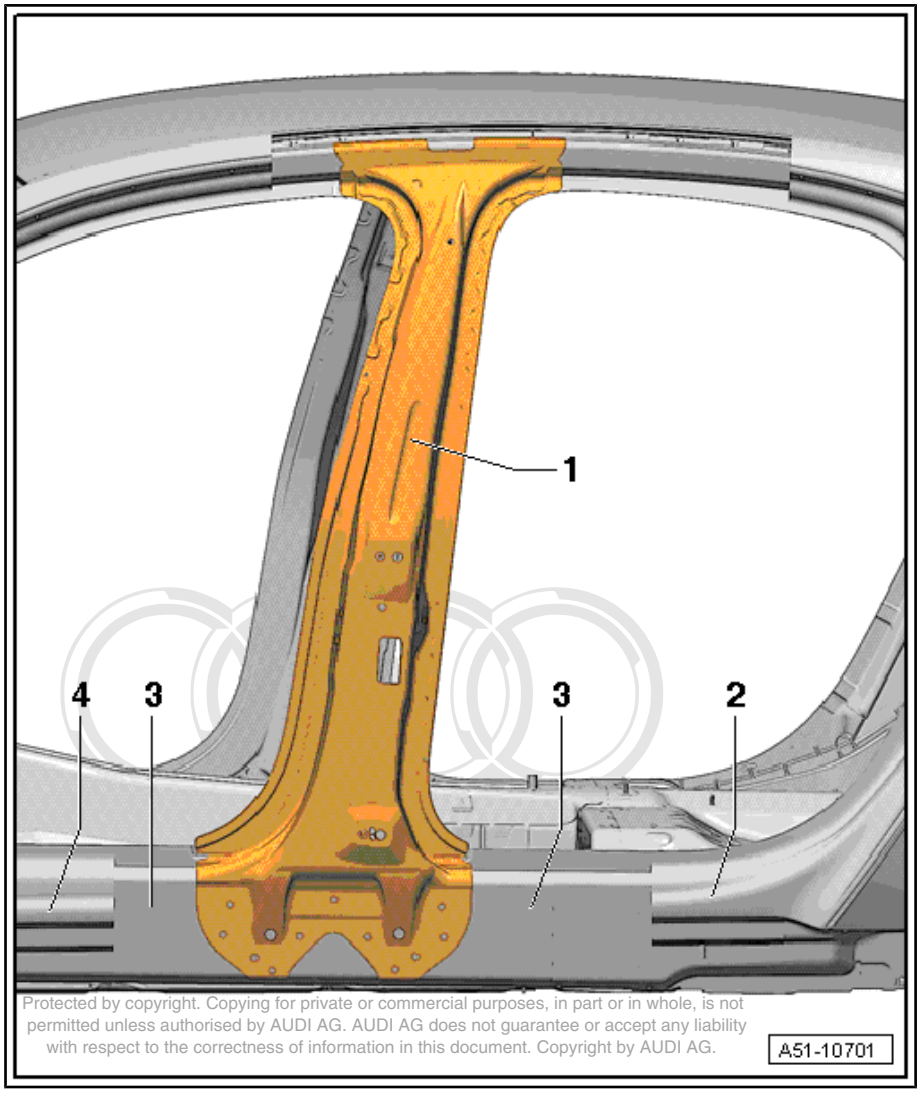

Note

The inner B-pillar is made of ultra-high strength steel (hot formed); the B-pillar closure plate is made of high-strength steel.

9.1 Notes for vehicles with hybrid drive

WARNING

Safety hazard: the engine can start unexpectedly.

Before carrying out general work on a vehicle with high-voltage electrical system, switch off the ignition and remove the ignition key from the vehicle.

DANGER!

When working on a vehicle with the ignition switched on or while the drive system is active, the engine can start unexpectedly and exhaust fumes can cause a health hazard in closed rooms. Moving parts can trap or draw in parts of the body and/or clothing (safety hazard).

Before switching on the ignition, perform the following steps:

- *Move selector lever to position P*
- *Activate parking brake*
- *Switch off ignition*
- *Open bonnet*
- *Connect battery charger (e.g. - VAS 5095A-) to jump-start connections of 12 V electrical system.*
- *Switch on ignition*

WARNING

Working on vehicles with high-voltage wiring:

- *Do not support yourself or tools on high-voltage wiring or associated components --> this can damage the insulation.*
- *High-voltage wiring must not be excessively bent or kinked --> this can damage the insulation.*
- *The round high-voltage connectors are colour-coded with an external coloured ring and are provided with mechanical coding or guide lugs. It is important to observe this coding when joining up the round high-voltage connectors; otherwise the connectors can be damaged.*

DANGER!

Risk of fatal injury if high-voltage components are damaged.

Observe the following when working in the vicinity of high-voltage components or wiring:

- *It is not permitted to use cutting or forming tools, other sharp-edged tools or heat sources such as welding, brazing, soldering, hot air or thermal bonding equipment.*
- *Before starting work, visually inspect the high-voltage components in the areas involved.*
- *Before working in the engine compartment, visually inspect the power and control electronics for electric drive - JX1- , electric drive motor - V141- , air conditioner compressor - V470- and high-voltage wiring.*
- *Before working on the vehicle underbody, visually inspect the high-voltage wiring and covers.*
- *Before working on the rear section of the vehicle, visually inspect the high-voltage wiring and the hybrid battery unit with the maintenance connector for high-voltage system - TW - .*
- *Visually inspect all potential equalisation lines.*

Check the following when making the visual inspection:

- *There must be no external damage on any component.*
- *The insulation of the high-voltage wiring and potential equalisation lines must not be damaged.*
- *There must be no unusual deformation of the high-voltage wiring.*
- *All high-voltage components must be identified by a red warning sticker.*

DANGER!

High voltage can cause fatal injury.

Danger of severe or fatal injuries from electric shock.

- *The high-voltage system may only be re-energised by a suitably qualified person (Audi high-voltage technician).*
- *The system may only be re-energised using the vehicle diagnostic tester via “Guided Fault Finding”.*
- *The vehicle is then made ready for operation again by the qualified person (Audi high-voltage technician).*
- *The qualified person (Audi high-voltage technician) marks the vehicle by attaching the appropriate warning signs.*

DANGER!

High voltage can cause fatal injury.

Danger of severe or fatal injuries from electric shock.

- *The high-voltage system may only be de-energised by a suitably qualified person (Audi high-voltage technician).*
- *It must be definitely confirmed that the high-voltage system is de-energised. The system may only be de-energised using the vehicle diagnostic tester via "Guided Fault Finding".*
- *The qualified person (Audi high-voltage technician) confirms that the system is de-energised and ensures that it cannot be re-energised by fitting the locking cap - T40262- and by storing the ignition key and the maintenance connector for high-voltage system - TW - in a safe place.*
- *The qualified person (Audi high-voltage technician) marks the vehicle by attaching the appropriate warning signs.*

Note

Please refer to the Electronic parts catalogue when ordering replacement parts.

WARNING

Accidents can be caused if the driver is distracted by test equipment while road-testing, or if test equipment is not properly secured.

Injuries can be caused if the passenger's airbag is triggered in a collision.

- *The use of test equipment while driving causes distraction.*
- *There is an increased risk of injury if test equipment is not secured.*
- *Move the front passenger's seat back as far as it will go.*
- *Use only the vehicle diagnostic and service information system - VAS 5052- or the diagnostic system - VAS 5053- .*
- *The test equipment -1- must rest flat on the passenger's thighs (as shown in illustration) and must be operated by the passenger.*

9.2 Tools

Special tools and workshop equipment required

- Compact angle grinder - VAS 5167-
- Drill - VAS 5144-
- Compact booster - VAS 6790-

- Mechanical door tensioner - V.A.G 1438-

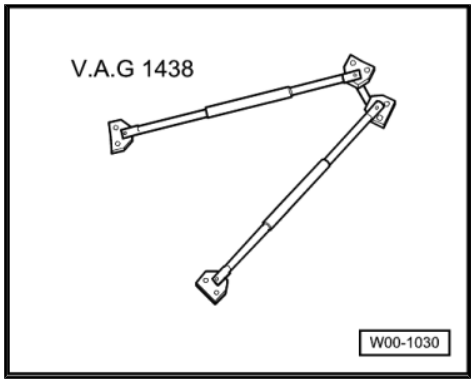

- Double cartridge gun - VAS 6453-

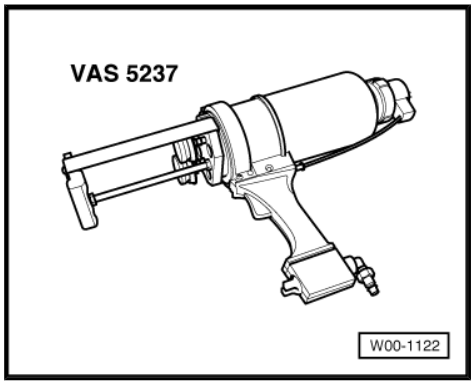

- Socket for flow-drill screws - VAS 6426 -
- Accessory set for rechargeable riveter - VAS 5279/1-

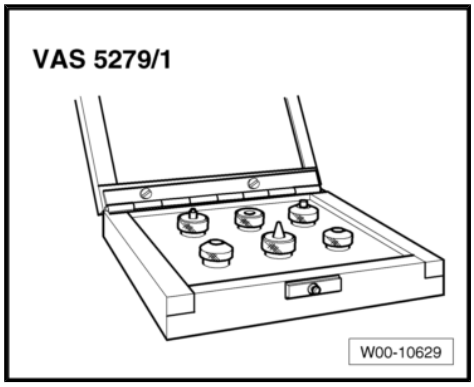

- Rechargeable riveter - VAS 5279 A-
- Alternatively, you can use the rechargeable riveter - VAS 5279 B- . This is a complete set.

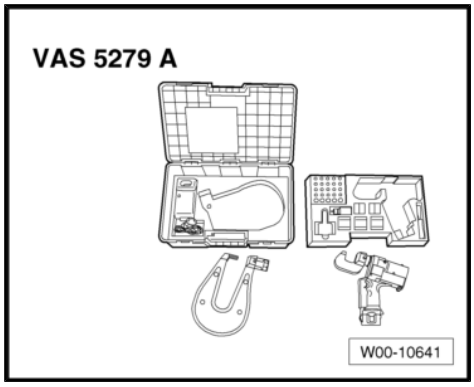

9.3 Procedure

Note

- *The Audi A8 employs flow-drill screws which can be renewed using socket for flow-drill screws - VAS 6426- or -6426/1- and 6426/2 .*
- *Repairing joints with flow-drill screws* ⇒ page 4

Cutting locations

Permitted separating cuts on complete side panel ⇒ page 116 .

- Outer B-pillar removed ⇒ page 187

– Make separating cuts according to dimensions -a, b, c, d, e- using body saw .

Dimension -a- = 117 mm

Dimension -b- = 70 mm

Dimension -c- = 80 mm

Dimension -d- = 80 mm

Dimension -e- = 8 mm

– Take care not to damage inner side member when making separating cuts in side member.

– Take care not to damage inner roof frame when making separating cuts in roof side member.

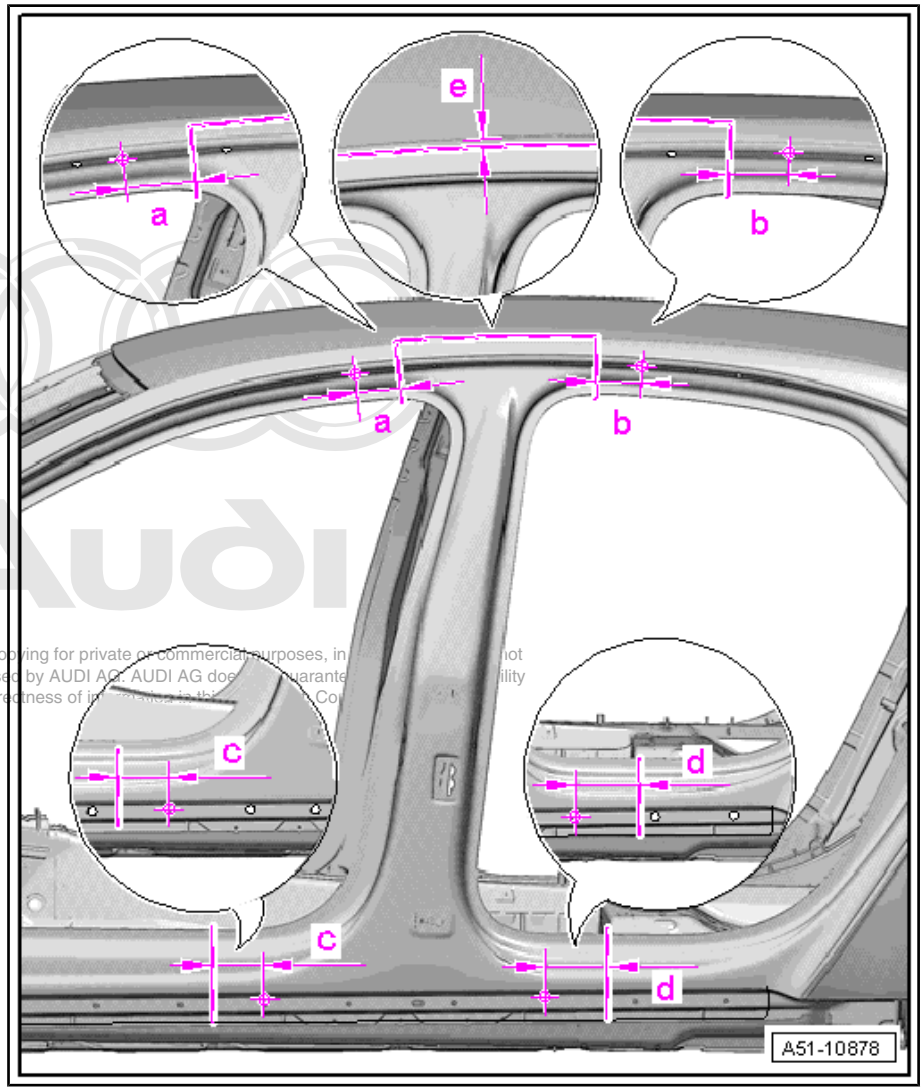

– Before separating joints, attach mechanical door tensioner - V.A.G 1438- .

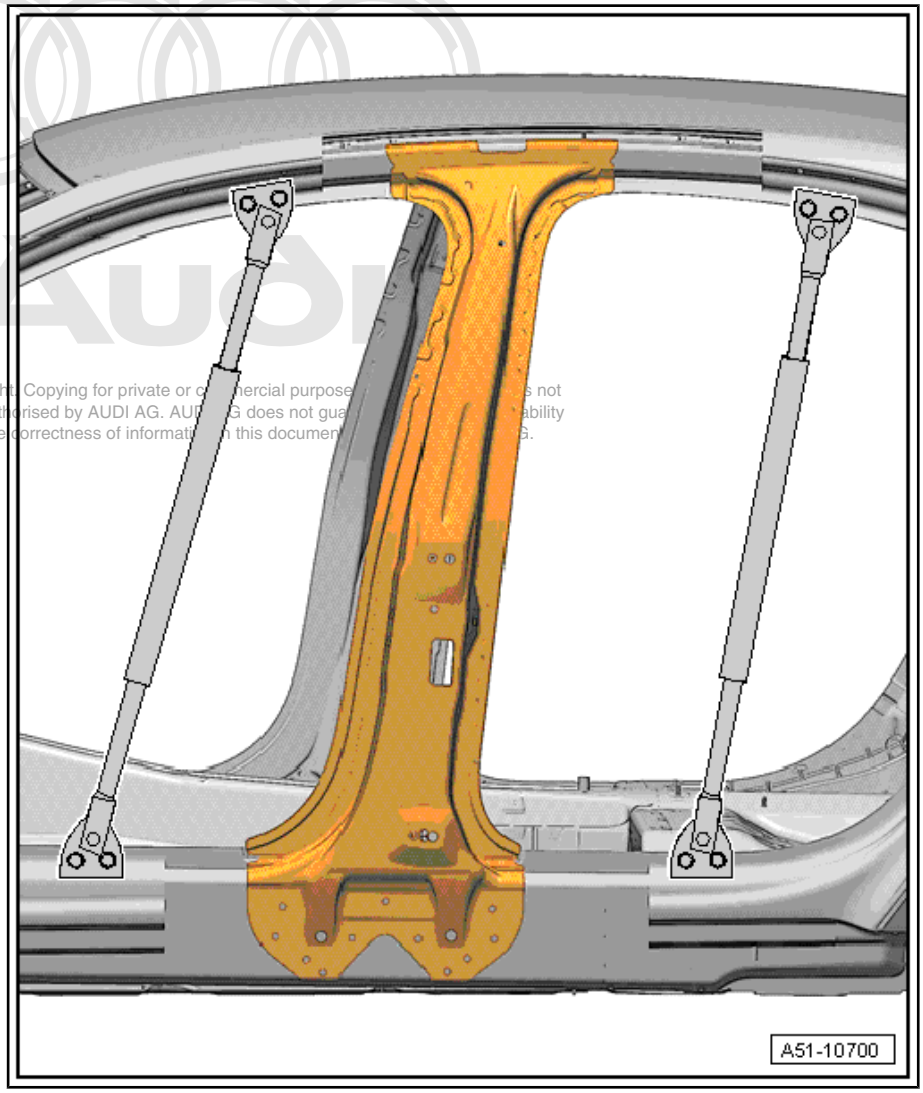

- Remove screws using socket for flow-drill screws - VAS 6426 - and separate inner joint -b-.
- Remove screws using socket for flow-drill screws - VAS 6426 - and separate bottom joint -c-.
- Separate original joint -a- using rechargeable riveter - VAS 5279 A- or compact booster - VAS 6790- . For attachments see ⇒ page 15 .

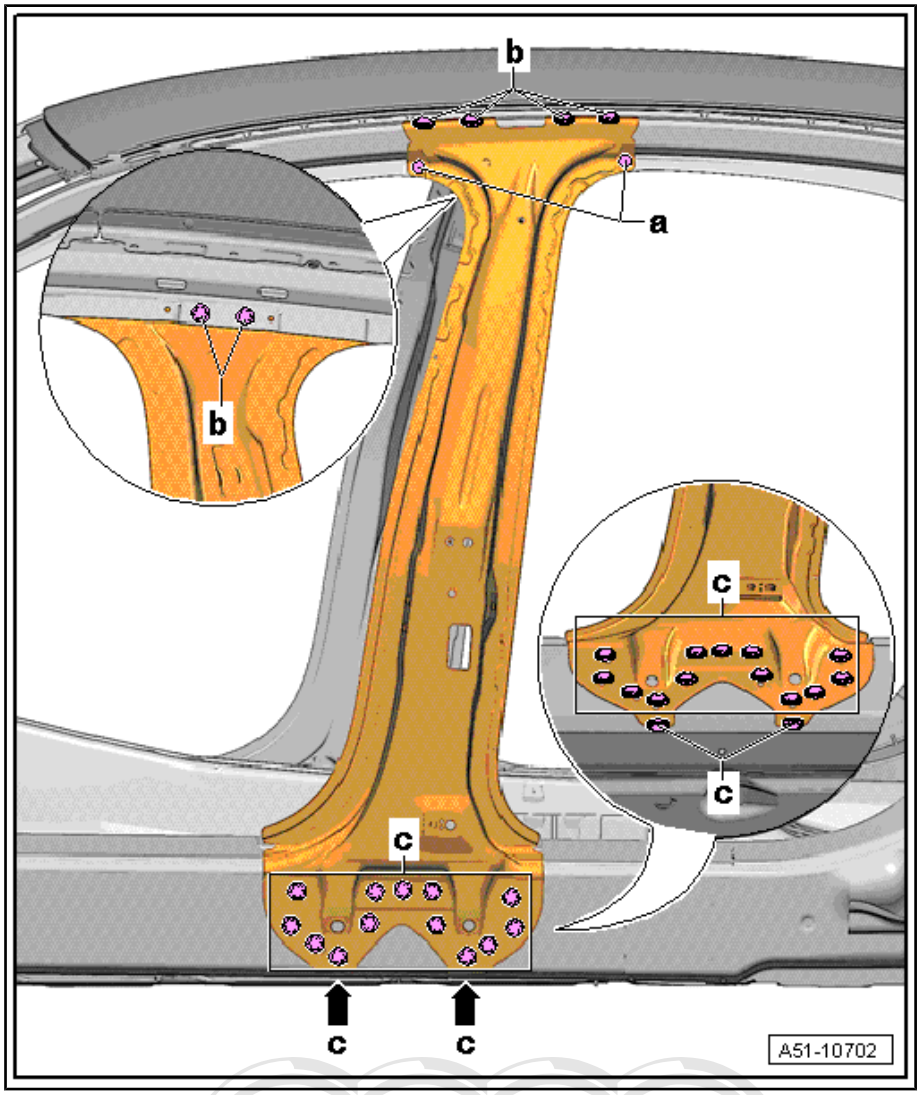

– Remove remaining material using compact angle grinder .

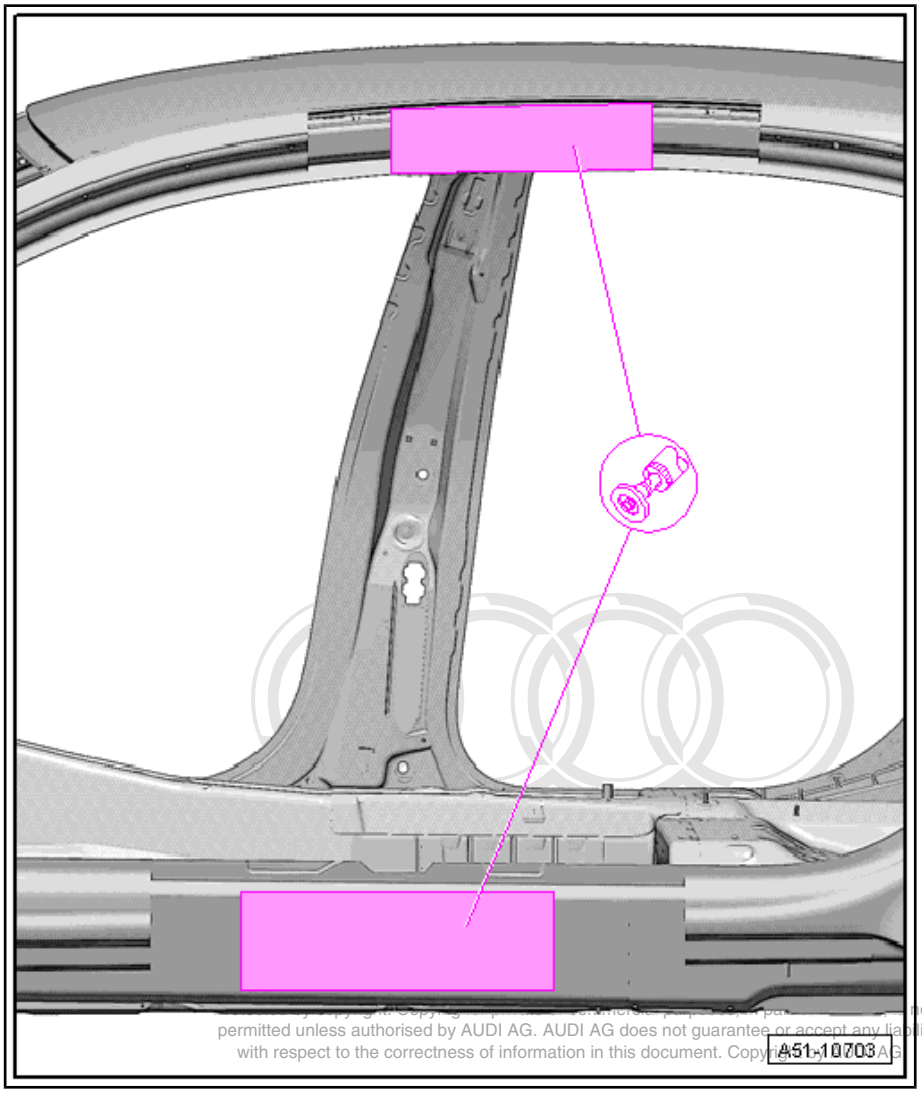

Replacement parts

- Inner B-pillar
- Punch rivets (self-piercing rivets)
- Flow-drill screws

Preparing new part

– Drill additional holes (7 mm ∅) for securing B-pillar.

Dimension -a- = 15 mm

Dimension -b- = 10 mm

Dimension -c- = 20 mm

Dimension -d- = 40 mm

Dimension -e- = 6 mm

Dimension -f- = 25 mm

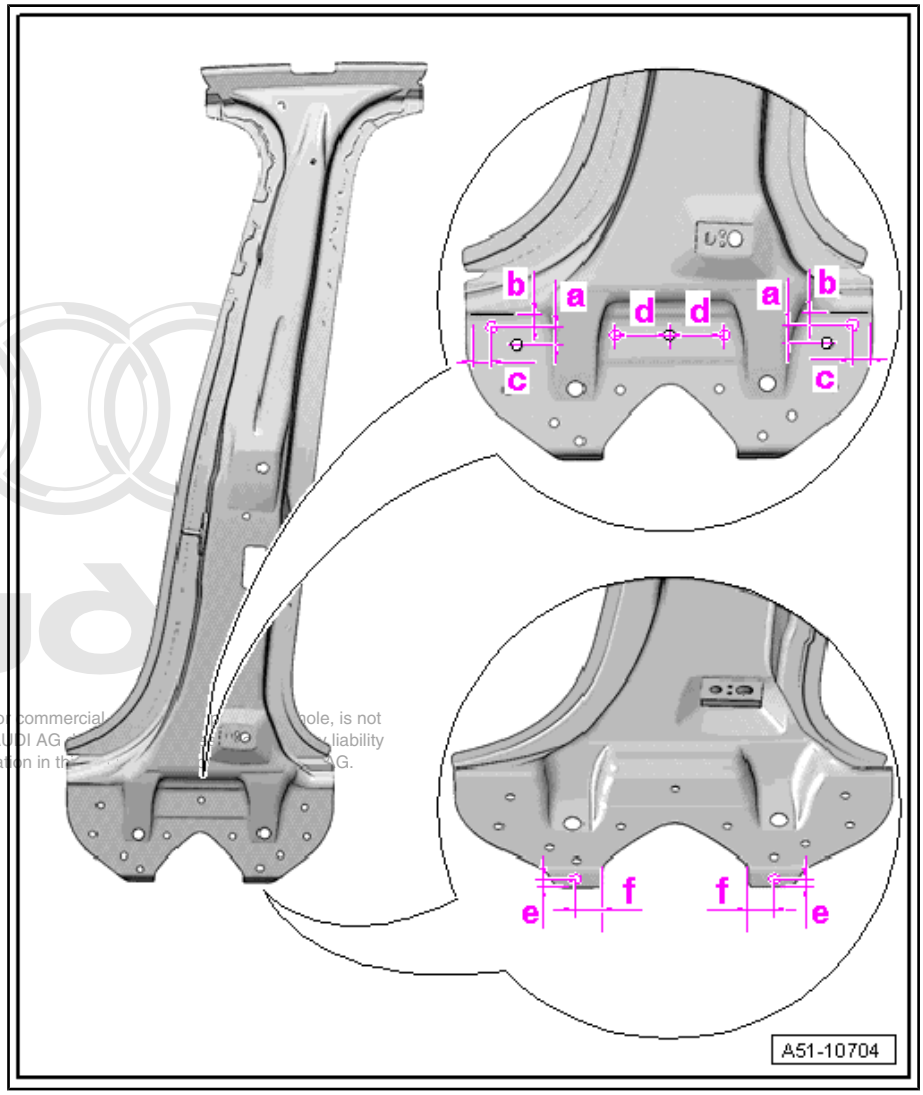

– Fit B-pillar and drill additional holes (4.0 mm ∅) for flow-drill screws in side member ⇒ page 4 .

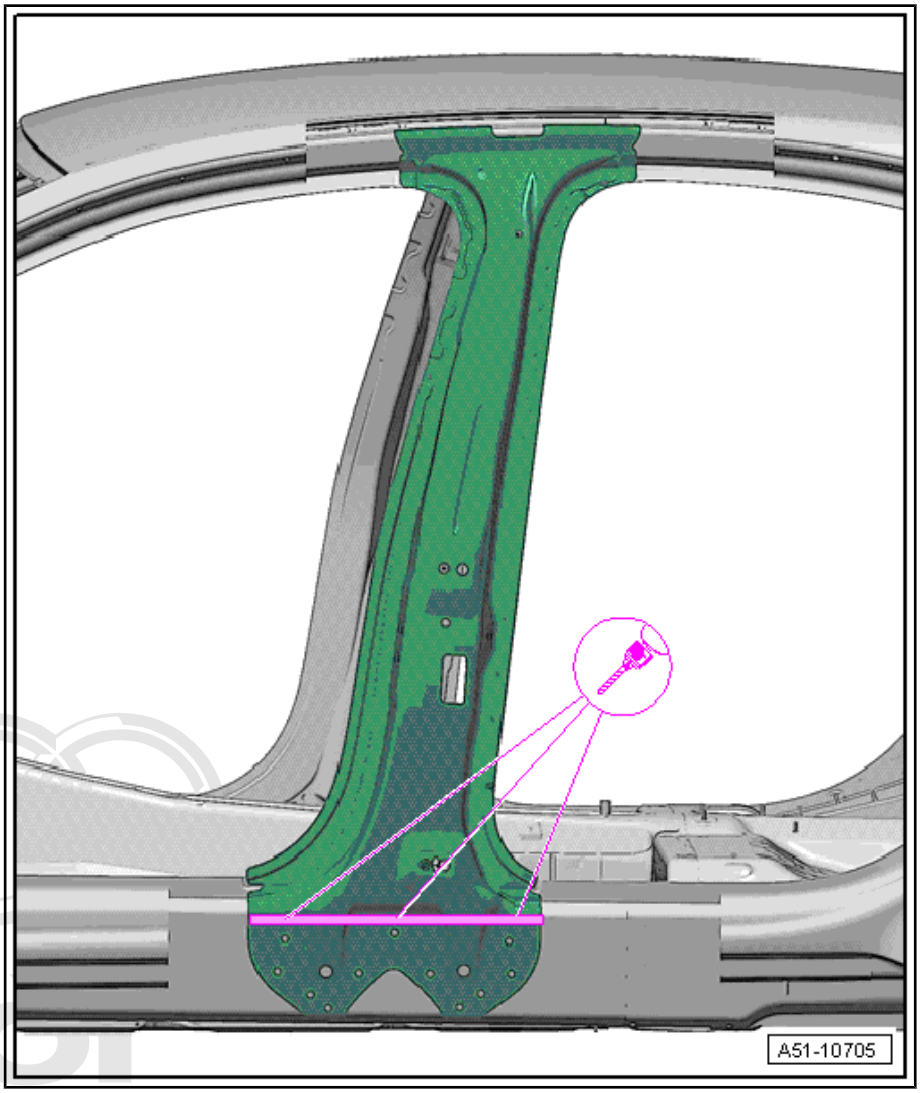

Preparing joints for adhesive application

- Take off B-pillar and prepare flanges on body and B-pillar for bonding.
- Clean bonding area with cleaning solution - D 009 401 04- .
- Prepare bonding area with silicate stone - DA 009 800 - and clean.
- Apply aluminium primer - DA 009 801 - to bonding surfaces using applicator - D 009 500 25 - .
- Operate double cartridge gun - VAS 6453- with 2-component epoxy adhesive - DA 180 A00 A2 - and apply an approx. 100 mm long bead of adhesive to a piece of cardboard before starting application on the B-pillar.
- Apply 2-component epoxy adhesive - DA 180 A00 A2 - to inner B-pillar using double cartridge gun - VAS 6453- .

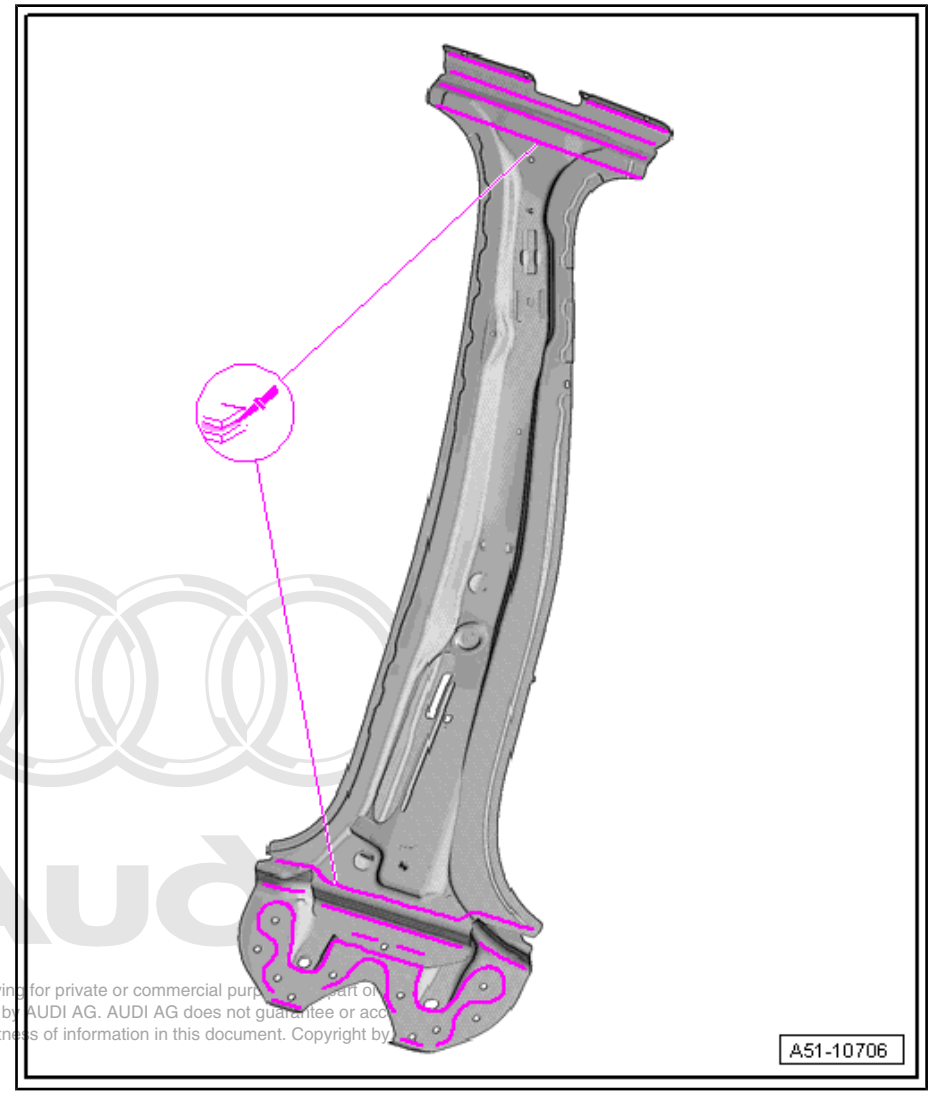

- Fix inner B-pillar in position on alignment bracket.
- Secure B-pillar with screws using socket for flow-drill screws - VAS 6426 - .
- Rivet in inner A-pillar using rechargeable riveter - VAS 5279 A- or compact booster - VAS 6790 - . For attachments see ⇒ page 15 .

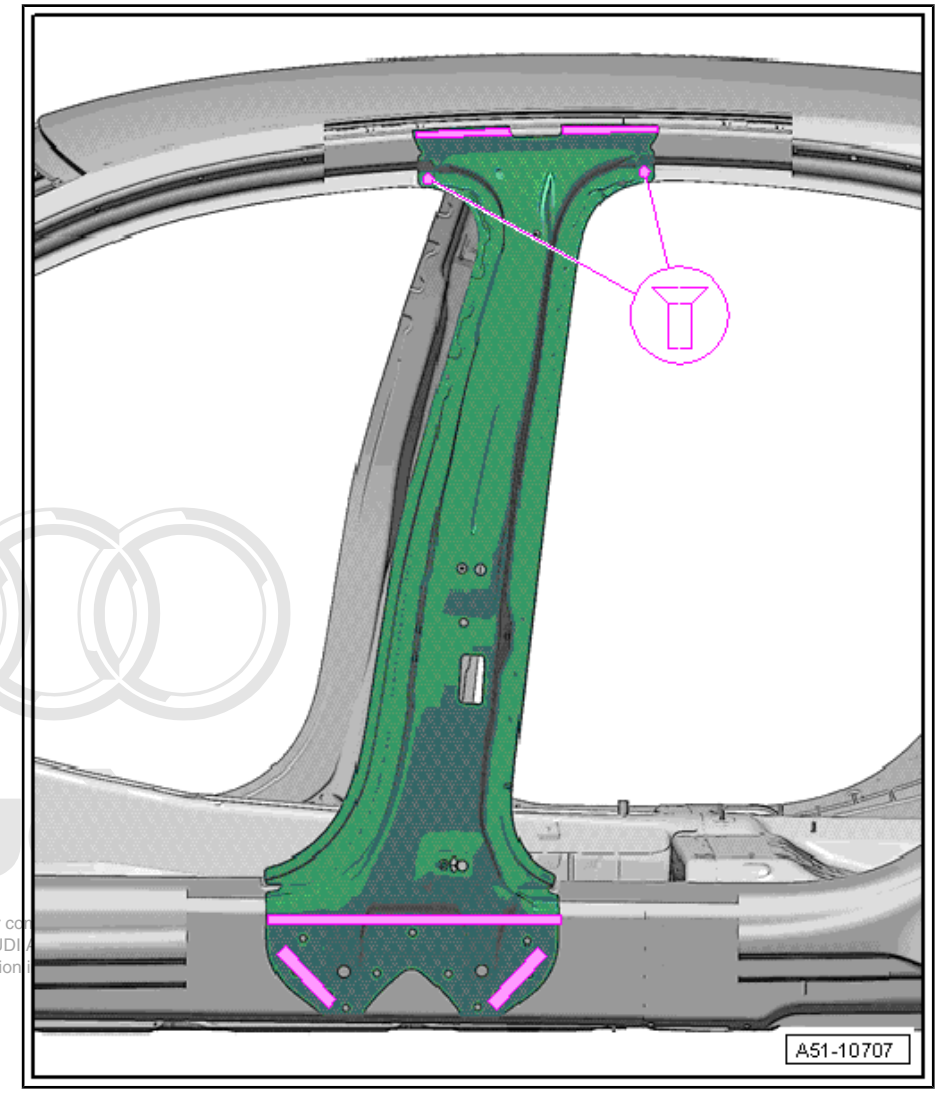

- Install outer B-pillar ⇒ page 187 .

RO: 51 45 55 00

10 Outer side member - Renewal

1 - Outer side member

2 - Separating cut in B-pillar

3 - Separating cut in side member (rear)

Partial renewal
Partial renewal is possible with this separating cut.

4 - Separating cut at wheel arch

5 - Moulded foam insert

6 - Separating cut in A-pillar

7 - Separating cut in side member (front)

Partial renewal
Partial renewal is possible with this separating cut.

8 - Separating cut in side member

Partial renewal
Partial renewal is possible with this separating cut.

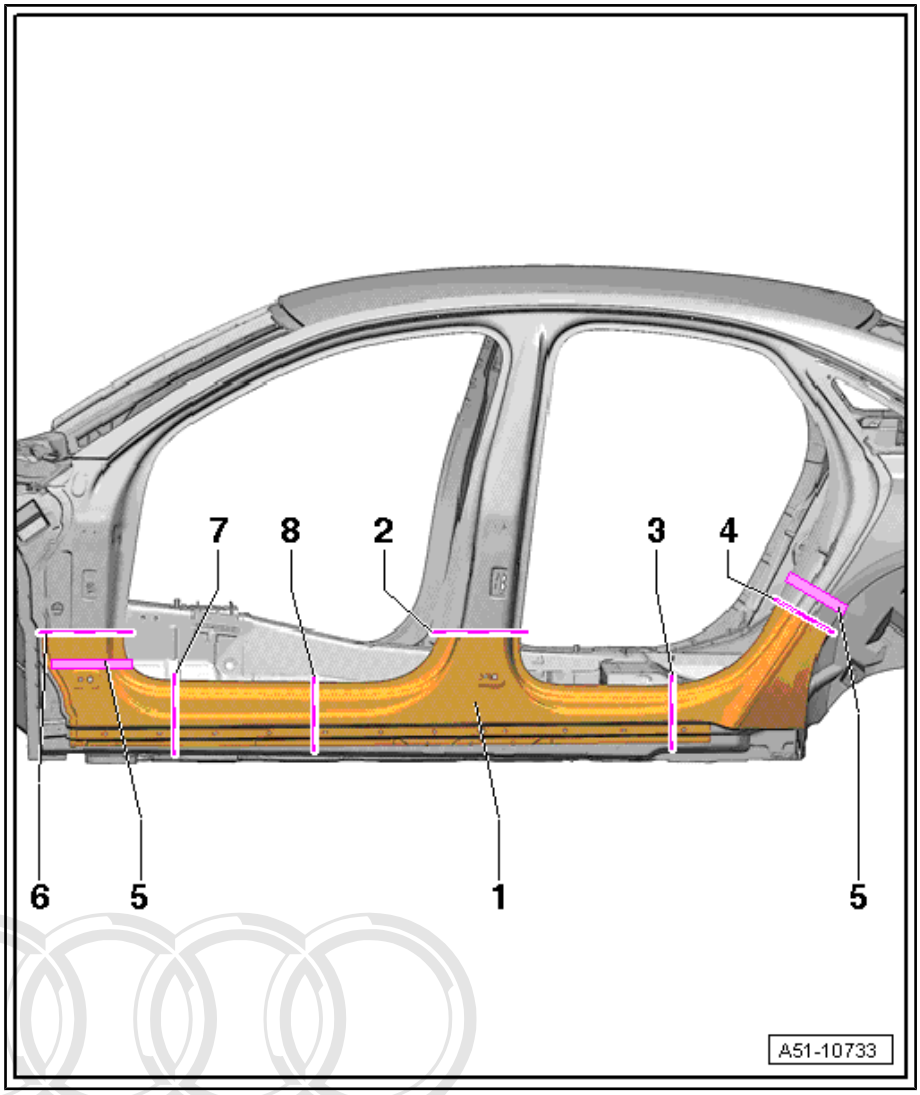

10.1 Notes for vehicles with hybrid drive

WARNING

Safety hazard: the engine can start unexpectedly.

Before carrying out general work on a vehicle with high-voltage electrical system, switch off the ignition and remove the ignition key from the vehicle.

DANGER!

When working on a vehicle with the ignition switched on or while the drive system is active, the engine can start unexpectedly and exhaust fumes can cause a health hazard in closed rooms. Moving parts can trap or draw in parts of the body and/or clothing (safety hazard).

Before switching on the ignition, perform the following steps:

- *Move selector lever to position P*
- *Activate parking brake*
- *Switch off ignition*
- *Open bonnet*
- *Connect battery charger (e.g. - VAS 5095A-) to jump-start connections of 12 V electrical system.*
- *Switch on ignition*

WARNING

Working on vehicles with high-voltage wiring:

- *Do not support yourself or tools on high-voltage wiring or associated components --> this can damage the insulation.*
- *High-voltage wiring must not be excessively bent or kinked --> this can damage the insulation.*
- *The round high-voltage connectors are colour-coded with an external coloured ring and are provided with mechanical coding or guide lugs. It is important to observe this coding when joining up the round high-voltage connectors; otherwise the connectors can be damaged.*

DANGER!

Risk of fatal injury if high-voltage components are damaged.

Observe the following when working in the vicinity of high-voltage components or wiring:

- *It is not permitted to use cutting or forming tools, other sharp-edged tools or heat sources such as welding, brazing, soldering, hot air or thermal bonding equipment.*
- *Before starting work, visually inspect the high-voltage components in the areas involved.*
- *Before working in the engine compartment, visually inspect the power and control electronics for electric drive - JX1- , electric drive motor - V141- , air conditioner compressor - V470- and high-voltage wiring.*
- *Before working on the vehicle underbody, visually inspect the high-voltage wiring and covers.*
- *Before working on the rear section of the vehicle, visually inspect the high-voltage wiring and the hybrid battery unit with the maintenance connector for high-voltage system - TW - .*
- *Visually inspect all potential equalisation lines.*

Check the following when making the visual inspection:

- *There must be no external damage on any component.*
- *The insulation of the high-voltage wiring and potential equalisation lines must not be damaged.*
- *There must be no unusual deformation of the high-voltage wiring.*
- *All high-voltage components must be identified by a red warning sticker.*

DANGER!

High voltage can cause fatal injury.

Danger of severe or fatal injuries from electric shock.

- *The high-voltage system may only be re-energised by a suitably qualified person (Audi high-voltage technician).*
- *The system may only be re-energised using the vehicle diagnostic tester via “Guided Fault Finding”.*
- *The vehicle is then made ready for operation again by the qualified person (Audi high-voltage technician).*
- *The qualified person (Audi high-voltage technician) marks the vehicle by attaching the appropriate warning signs.*

DANGER!

High voltage can cause fatal injury.

Danger of severe or fatal injuries from electric shock.

- *The high-voltage system may only be de-energised by a suitably qualified person (Audi high-voltage technician).*
- *It must be definitely confirmed that the high-voltage system is de-energised. The system may only be de-energised using the vehicle diagnostic tester via "Guided Fault Finding".*
- *The qualified person (Audi high-voltage technician) confirms that the system is de-energised and ensures that it cannot be re-energised by fitting the locking cap - T40262- and by storing the ignition key and the maintenance connector for high-voltage system - TW - in a safe place.*
- *The qualified person (Audi high-voltage technician) marks the vehicle by attaching the appropriate warning signs.*

Note

Please refer to the Electronic parts catalogue when ordering replacement parts.

WARNING

Accidents can be caused if the driver is distracted by test equipment while road-testing, or if test equipment is not properly secured.

Injuries can be caused if the passenger's airbag is triggered in a collision.

- *The use of test equipment while driving causes distraction.*
- *There is an increased risk of injury if test equipment is not secured.*
- *Move the front passenger's seat back as far as it will go.*
- *Use only the vehicle diagnostic and service information system - VAS 5052- or the diagnostic system - VAS 5053- .*
- *The test equipment -1- must rest flat on the passenger's thighs (as shown in illustration) and must be operated by the passenger.*

10.2 Tools

Special tools and workshop equipment required

- Compact angle grinder - VAS 5167-
- Drill - VAS 5144-
- Chisel - VAS 5300/34-
- Socket for flow-drill screws - VAS 6426 -
- Double cartridge gun - VAS 6453-
- Compact booster - VAS 6790-

- Accessory set for rechargeable riveter - VAS 5279/1-

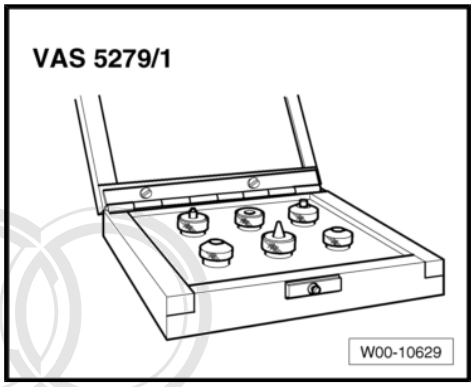

- Rechargeable riveter - VAS 5279 A-
- Alternatively, you can use the rechargeable riveter - VAS 5279 B- . This is a complete set.

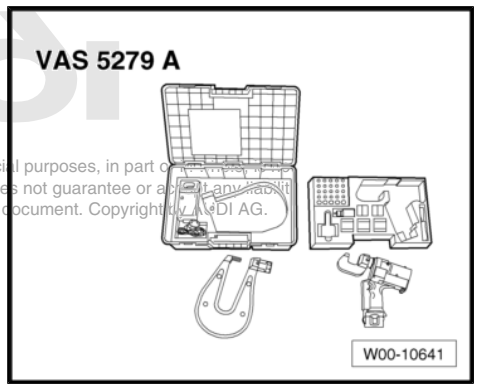

- Shielded arc welding equipment - VAS 6388-
- Pneumatic jig-saw - VAS 5108 - or body saw - VAS 6598 - or -VAS 6780-

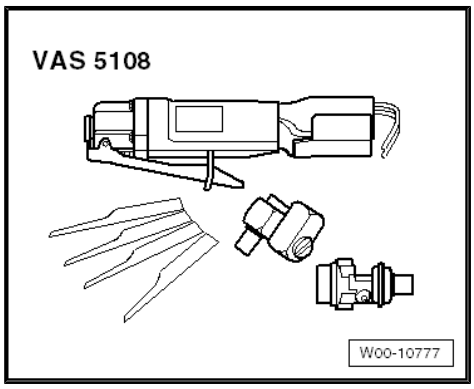

10.3 Procedure

Cutting locations

Permitted separating cuts on complete side panel ⇒ page 116 .

– Mark off separating cuts according to degree of damage and make cuts using body saw .
– Grind through edge of wheel arch using compact angle grinder .
– Separate original joint using rechargeable riveter - VAS 5279 A- or compact booster - VAS 6790- . For attachments see ⇒ page 15 .
– Separate bonded joints using chisel .
– Make separating cut -3- in front of node casting.

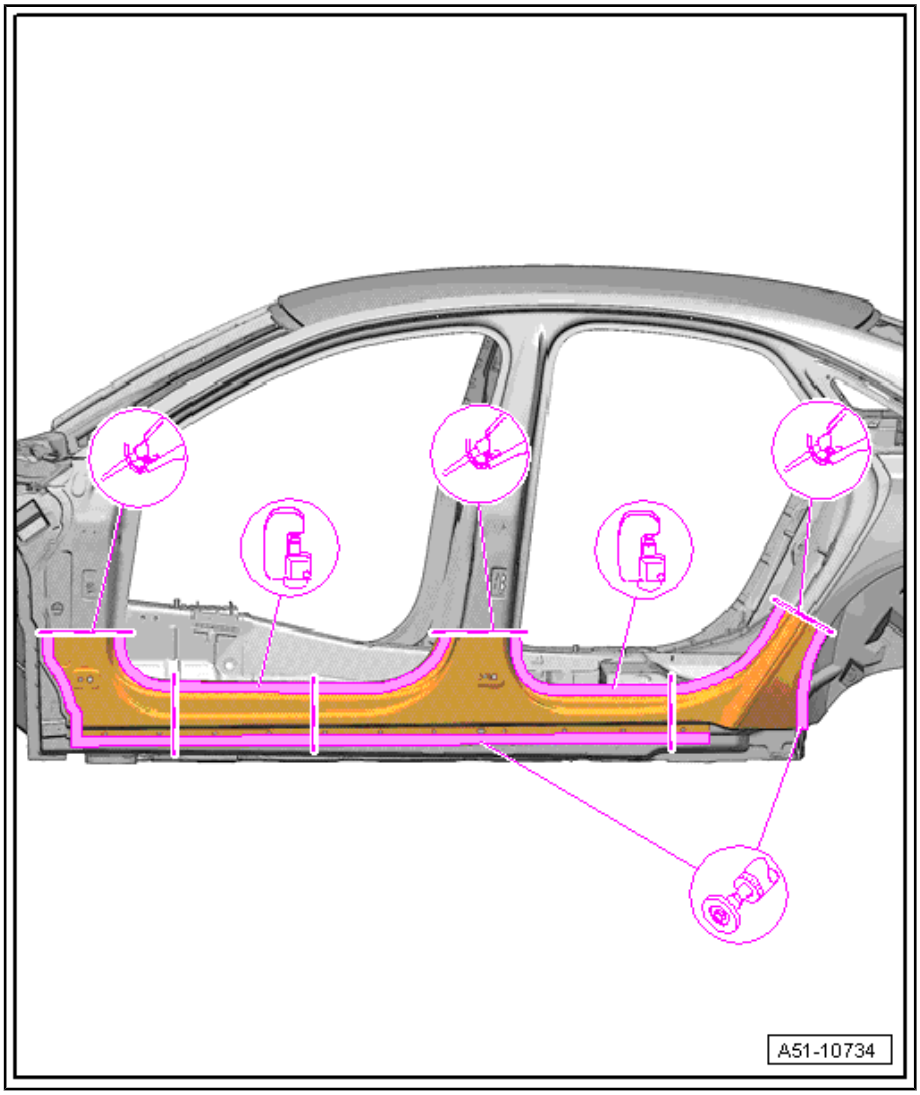

– Remove remaining material using compact angle grinder .

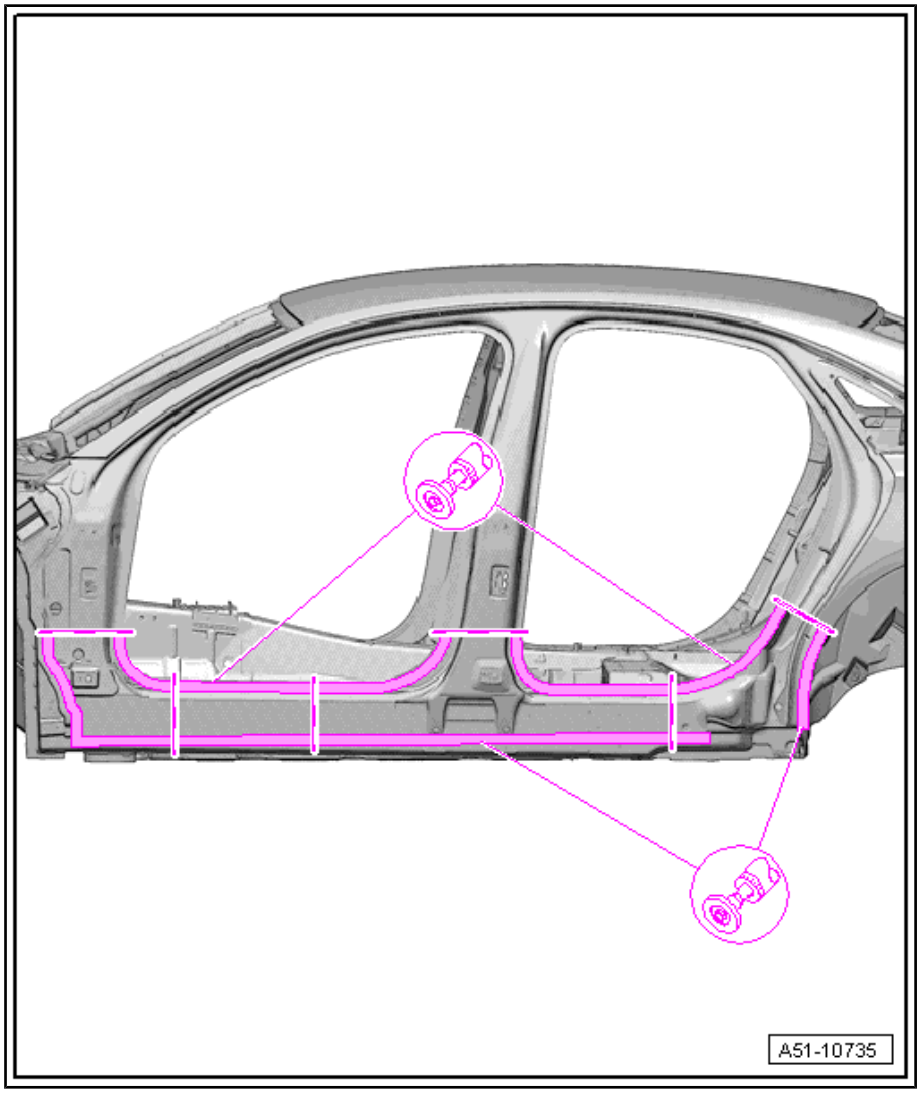

Replacement part

- Outer side member
- Punch rivets (self-piercing rivets)

Preparing new part

– Transfer separating cuts to new part and cut to size using body saw .

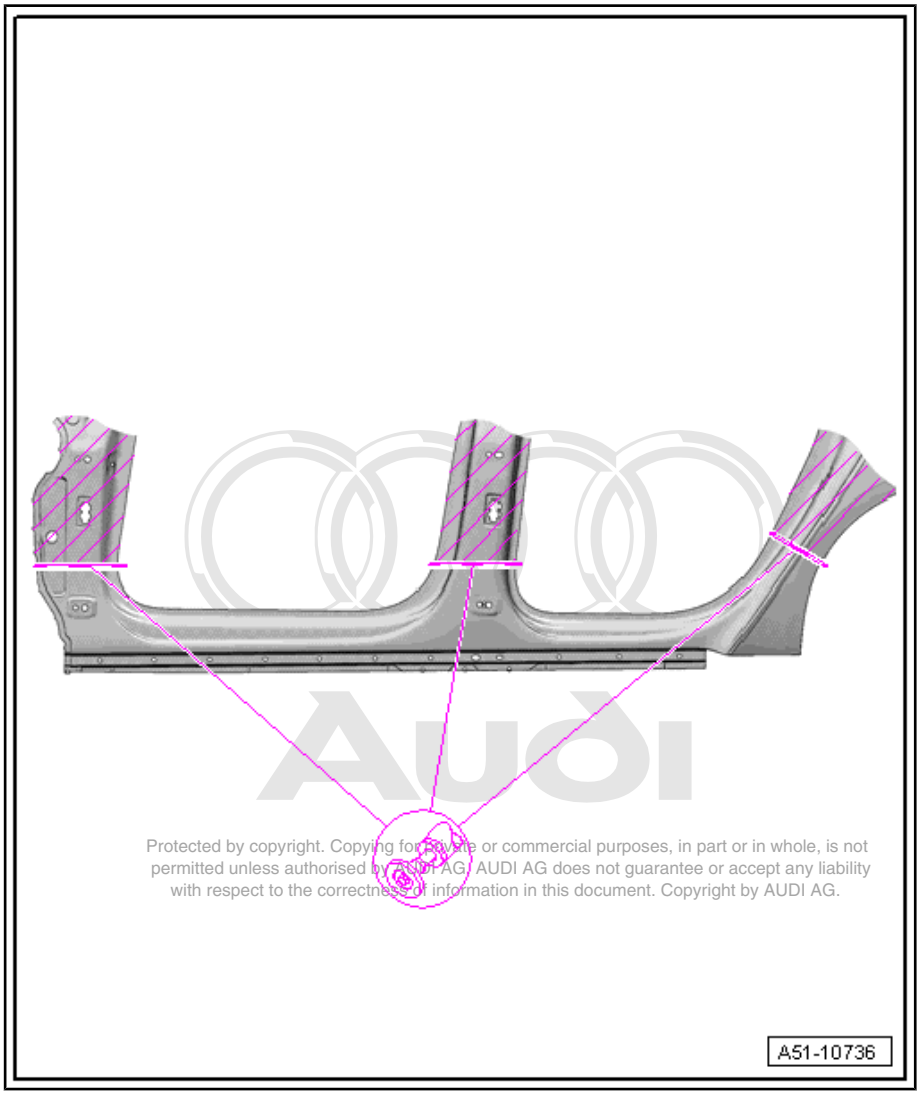

– Place backing plate of same material behind separating cuts -a-.

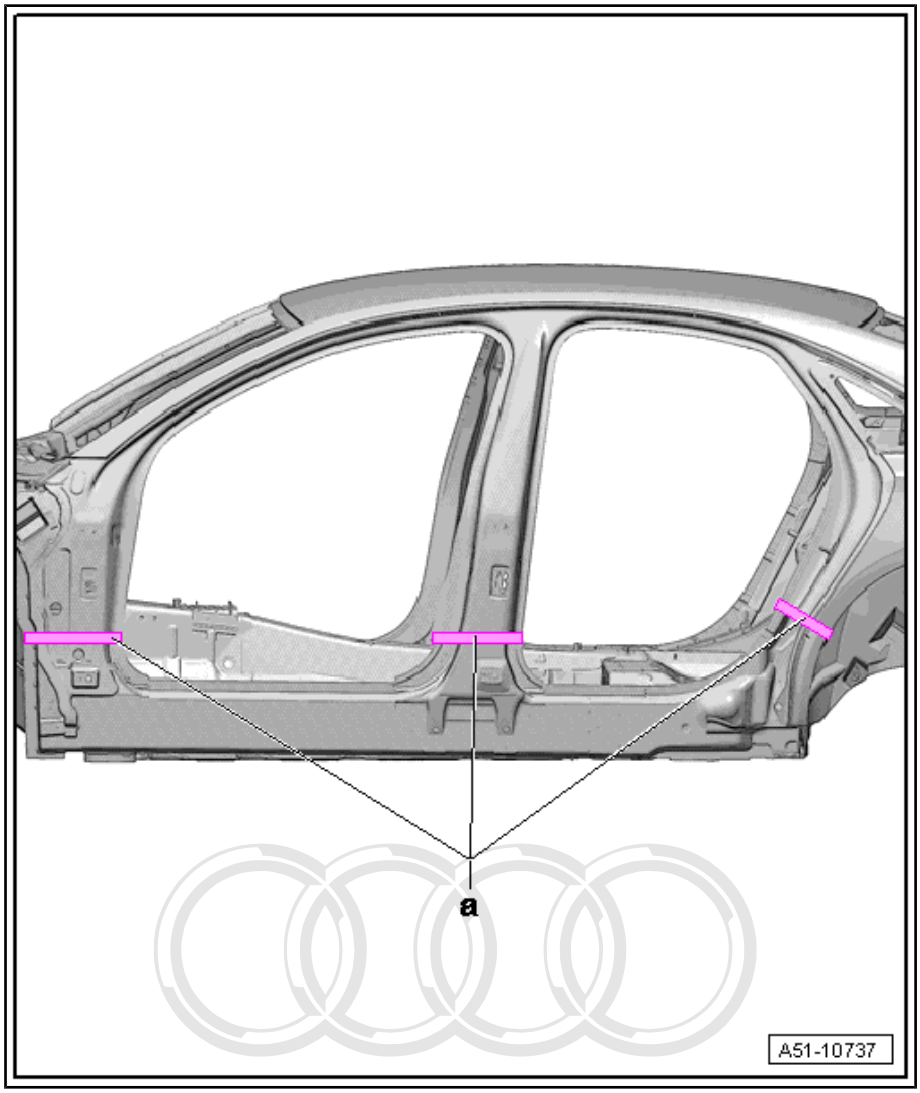

Note

Refer to General information on bonding.

Preparing joints for adhesive application

- Prepare flanges on body and new parts for welding.
- Clean flanges on body and new parts with cleaning solution - D 009 401 04- .
- Prepare bonding area with silicate stone - DA 009 800 - and clean.
- Apply aluminium primer - DA 009 801 - to bonding surfaces using applicator - D 009 500 25 - .

Riveting in

- Match up and fix new part in position.
- Check fit relative to bolt-on parts.
- Rivet in side member using rechargeable riveter - VAS 5279 A- or compact booster - VAS 6790 - . For attachments see ⇒ page 15 .

– Apply 2-component epoxy adhesive - DA 180 A00 A2 - to bonding area using double cartridge gun - VAS 6453- .

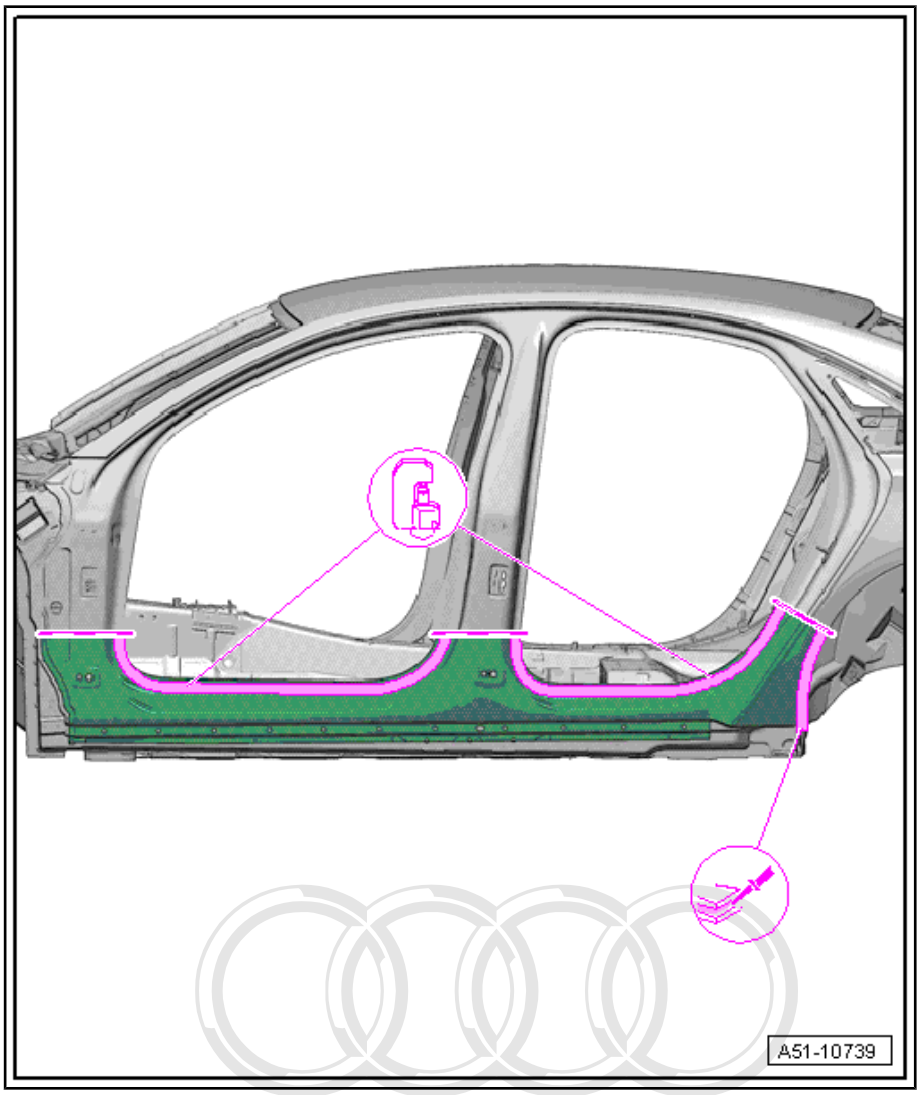

Welding in

– Weld in at outer separating cuts using shielded arc welding equipment : SG continuous seam.

– Weld in lower side member using shielded arc welding equipment : SG continuous seam (staggered - with gaps).

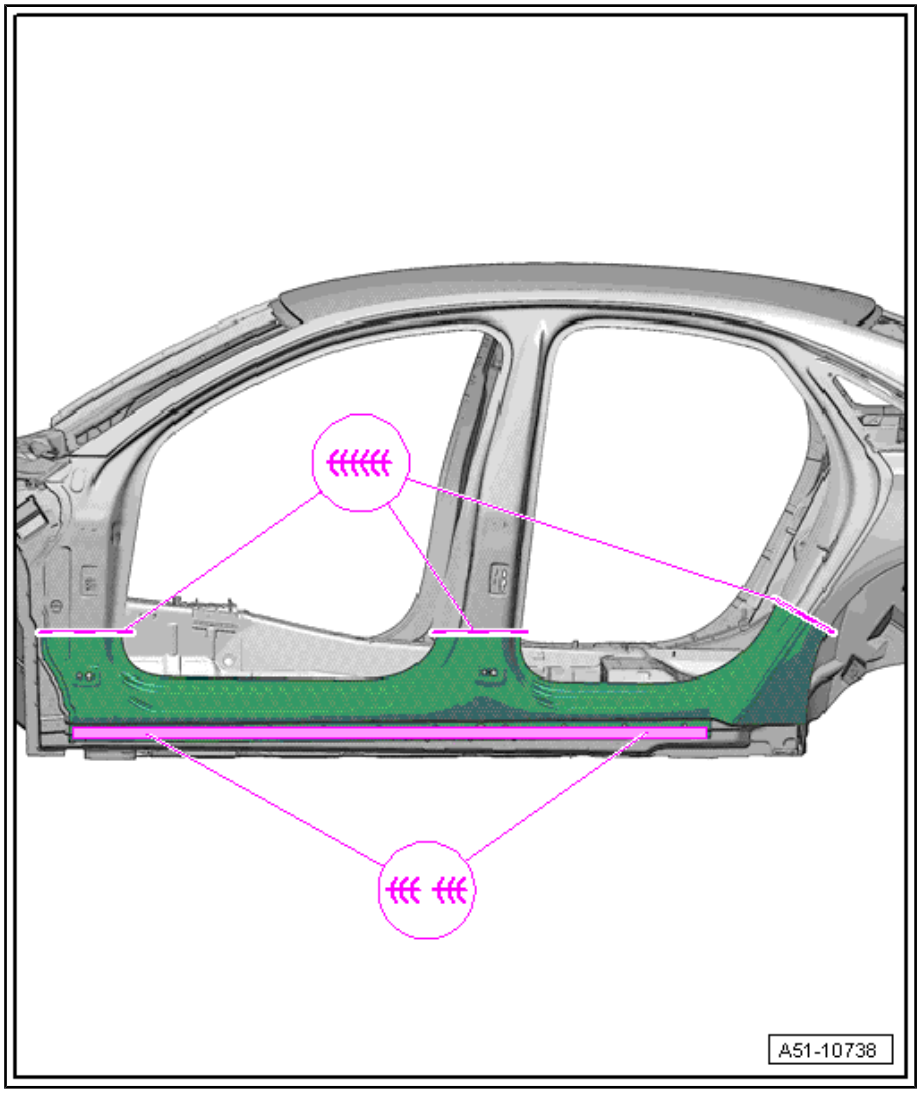

RO: 51 47 55 52

11 Inner side member - Partial renewal

1 - A-pillar

2 - Inner side member

3 - Inner B-pillar

4 - Separating cut in side member (front)

5 - Moulded foam insert

6 - Closure plate for inner side member

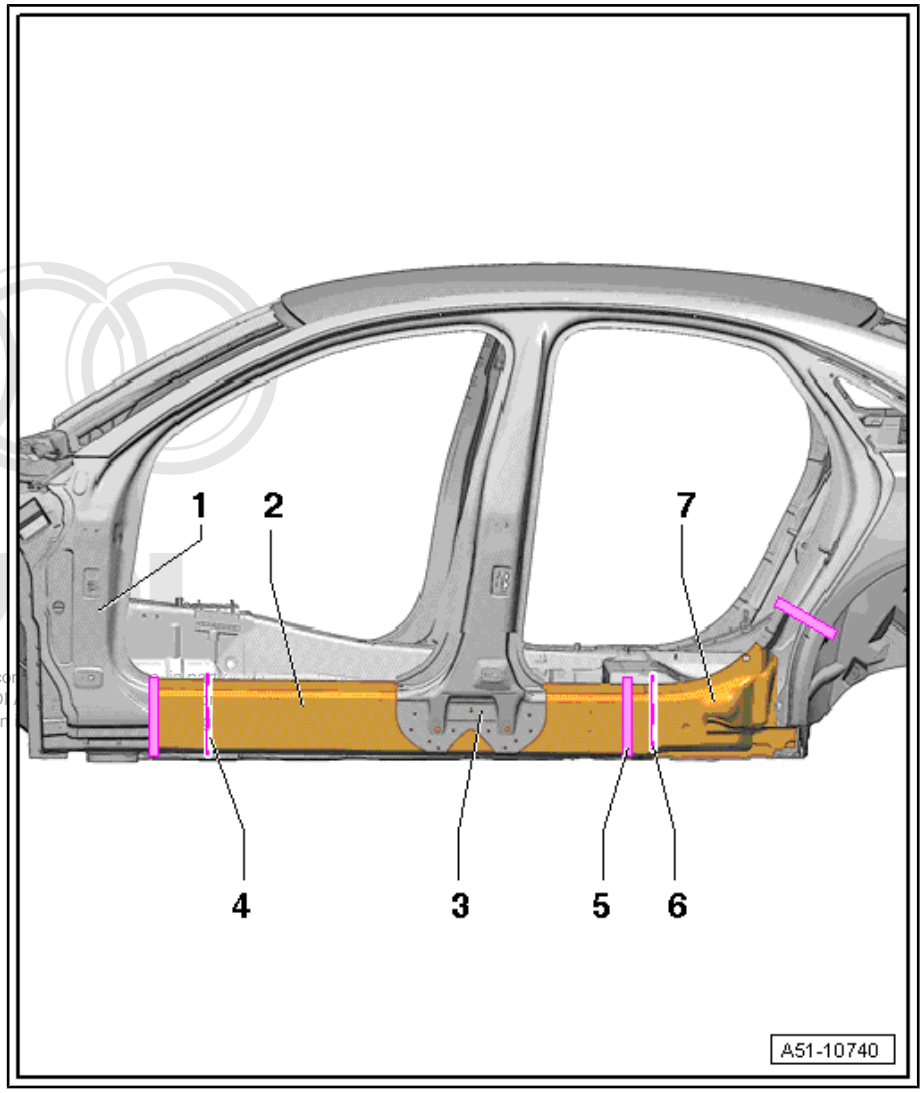

11.1 Notes for vehicles with hybrid drive

WARNING

Safety hazard: the engine can start unexpectedly.

Before carrying out general work on a vehicle with high-voltage electrical system, switch off the ignition and remove the ignition key from the vehicle.

DANGER!

When working on a vehicle with the ignition switched on or while the drive system is active, the engine can start unexpectedly and exhaust fumes can cause a health hazard in closed rooms. Moving parts can trap or draw in parts of the body and/or clothing (safety hazard).

Before switching on the ignition, perform the following steps:

- *Move selector lever to position P*
- *Activate parking brake*
- *Switch off ignition*
- *Open bonnet*
- *Connect battery charger (e.g. - VAS 5095A-) to jump-start connections of 12 V electrical system.*
- *Switch on ignition*

WARNING

Working on vehicles with high-voltage wiring:

- *Do not support yourself or tools on high-voltage wiring or associated components --> this can damage the insulation.*
- *High-voltage wiring must not be excessively bent or kinked --> this can damage the insulation.*
- *The round high-voltage connectors are colour-coded with an external coloured ring and are provided with mechanical coding or guide lugs. It is important to observe this coding when joining up the round high-voltage connectors; otherwise the connectors can be damaged.*

DANGER!

Risk of fatal injury if high-voltage components are damaged.

Observe the following when working in the vicinity of high-voltage components or wiring:

- *It is not permitted to use cutting or forming tools, other sharp-edged tools or heat sources such as welding, brazing, soldering, hot air or thermal bonding equipment.*
- *Before starting work, visually inspect the high-voltage components in the areas involved.*
- *Before working in the engine compartment, visually inspect the power and control electronics for electric drive - JX1- , electric drive motor - V141- , air conditioner compressor - V470- and high-voltage wiring.*
- *Before working on the vehicle underbody, visually inspect the high-voltage wiring and covers.*
- *Before working on the rear section of the vehicle, visually inspect the high-voltage wiring and the hybrid battery unit with the maintenance connector for high-voltage system - TW - .*
- *Visually inspect all potential equalisation lines.*

Check the following when making the visual inspection:

- *There must be no external damage on any component.*
- *The insulation of the high-voltage wiring and potential equalisation lines must not be damaged.*
- *There must be no unusual deformation of the high-voltage wiring.*
- *All high-voltage components must be identified by a red warning sticker.*

DANGER!

High voltage can cause fatal injury.

Danger of severe or fatal injuries from electric shock.

- *The high-voltage system may only be re-energised by a suitably qualified person (Audi high-voltage technician).*
- *The system may only be re-energised using the vehicle diagnostic tester via "Guided Fault Finding".*
- *The vehicle is then made ready for operation again by the qualified person (Audi high-voltage technician).*
- *The qualified person (Audi high-voltage technician) marks the vehicle by attaching the appropriate warning signs.*

DANGER!

High voltage can cause fatal injury.

Danger of severe or fatal injuries from electric shock.

- *The high-voltage system may only be de-energised by a suitably qualified person (Audi high-voltage technician).*
- *It must be definitely confirmed that the high-voltage system is de-energised. The system may only be de-energised using the vehicle diagnostic tester via "Guided Fault Finding".*
- *The qualified person (Audi high-voltage technician) confirms that the system is de-energised and ensures that it cannot be re-energised by fitting the locking cap - T40262- and by storing the ignition key and the maintenance connector for high-voltage system - TW - in a safe place.*
- *The qualified person (Audi high-voltage technician) marks the vehicle by attaching the appropriate warning signs.*

Note

Please refer to the Electronic parts catalogue when ordering replacement parts.

WARNING

Accidents can be caused if the driver is distracted by test equipment while road-testing, or if test equipment is not properly secured.

Injuries can be caused if the passenger's airbag is triggered in a collision.

- *The use of test equipment while driving causes distraction.*
- *There is an increased risk of injury if test equipment is not secured.*
- *Move the front passenger's seat back as far as it will go.*
- *Use only the vehicle diagnostic and service information system - VAS 5052- or the diagnostic system - VAS 5053- .*
- *The test equipment -1- must rest flat on the passenger's thighs (as shown in illustration) and must be operated by the passenger.*

11.2 Tools

Special tools and workshop equipment required

- Compact angle grinder - VAS 5167-
- Drill - VAS 5144-
- Chisel - VAS 5300/34-
- Socket for flow-drill screws - VAS 6426-
- Double cartridge gun - VAS 6453-
- Compact booster - VAS 6790-

- Accessory set for rechargeable riveter - VAS 5279/1-

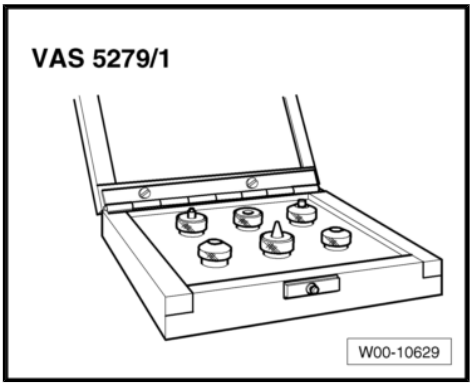

- Rechargeable riveter - VAS 5279 A-
- Alternatively, you can use the rechargeable riveter - VAS 5279 B- . This is a complete set.

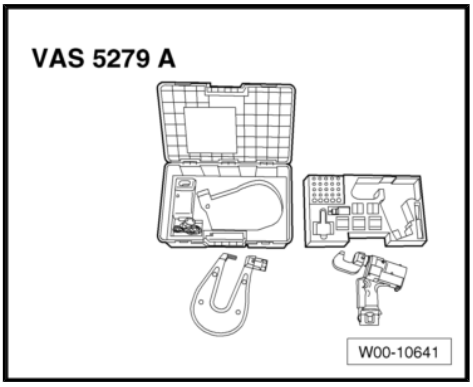

- Shielded arc welding equipment - VAS 6388-
- Pneumatic jig-saw - VAS 5108 - or body saw - VAS 6598 - or -VAS 6780-

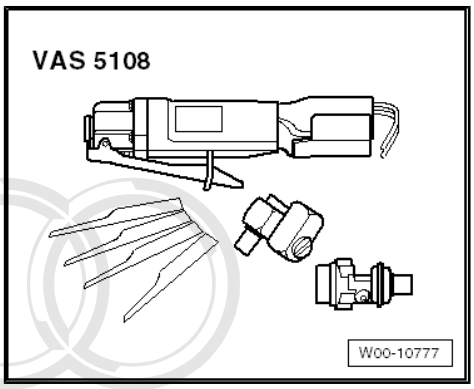

11.3 Procedure

Note

- *The Audi A8 employs flow-drill screws which can be renewed using socket for flow-drill screws - VAS 6426- or -6426/1- and 6426/2 .*
- *Repairing joints with flow-drill screws* ⇒ page 4

Cutting locations

- Outer side member removed ⇒ page 214

– Make separating cuts as shown using compact angle grinder .

– Remove screws using socket for flow-drill screws - VAS 6426 - and separate joints.

– If necessary, separate joint between B-pillar and side member using chisel .

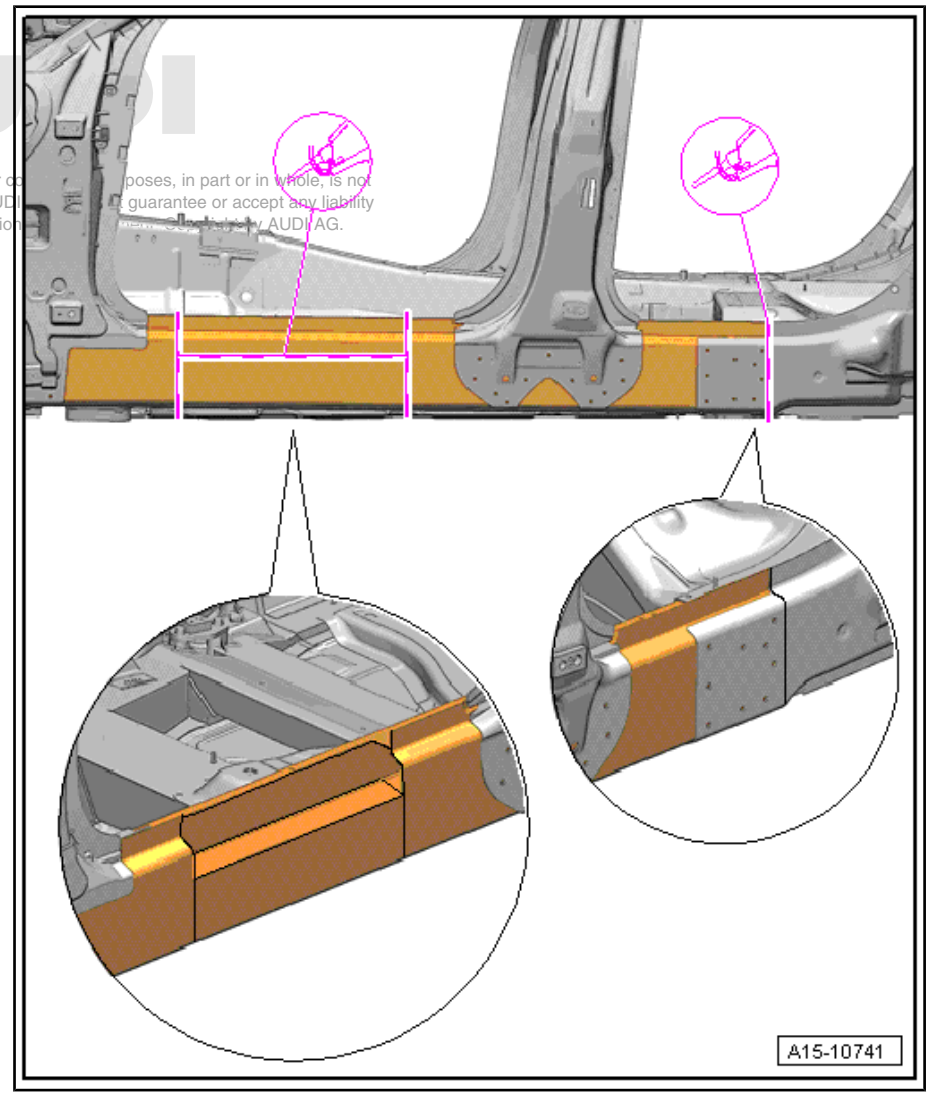

– Remove remaining material using compact angle grinder .

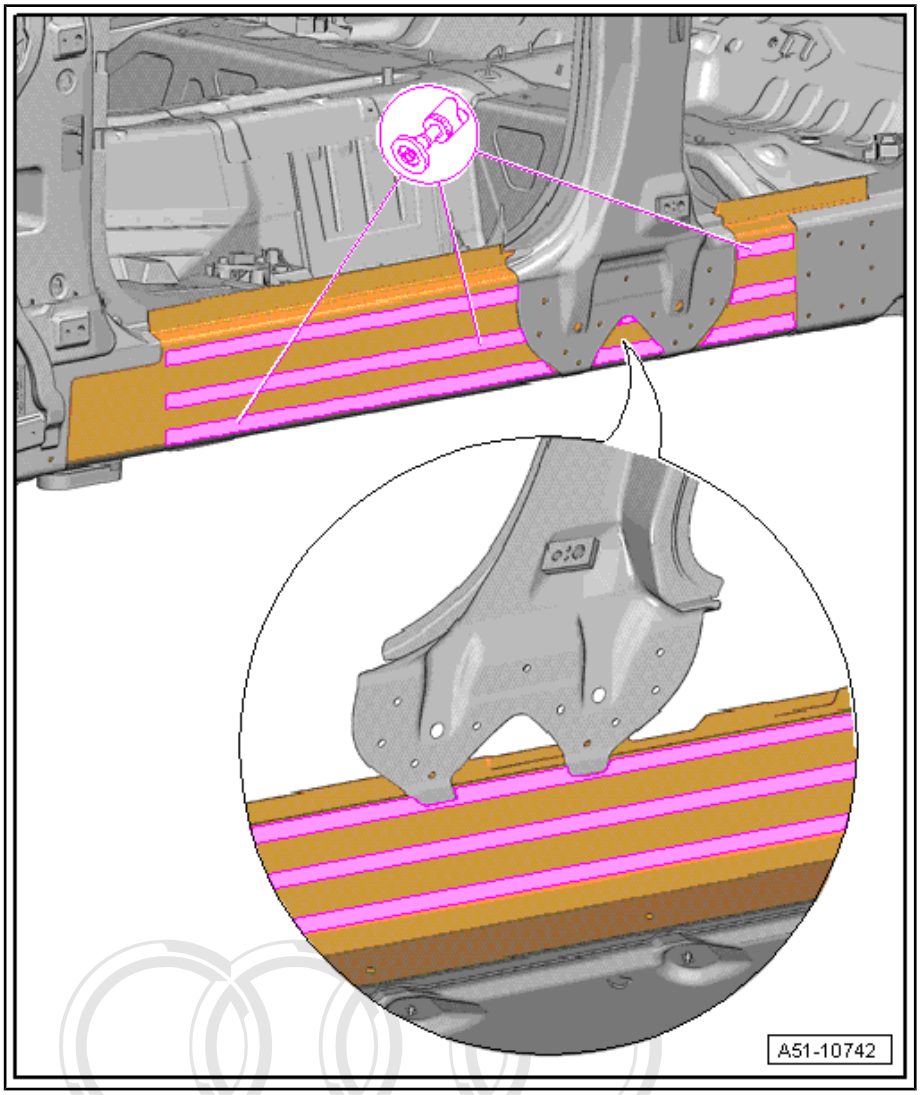

Replacement part

- Inner side member
- Closure plate for side member
- 2 Weld sleeves

Preparing new part

– Transfer separating cut to new part and cut off using compact angle grinder .

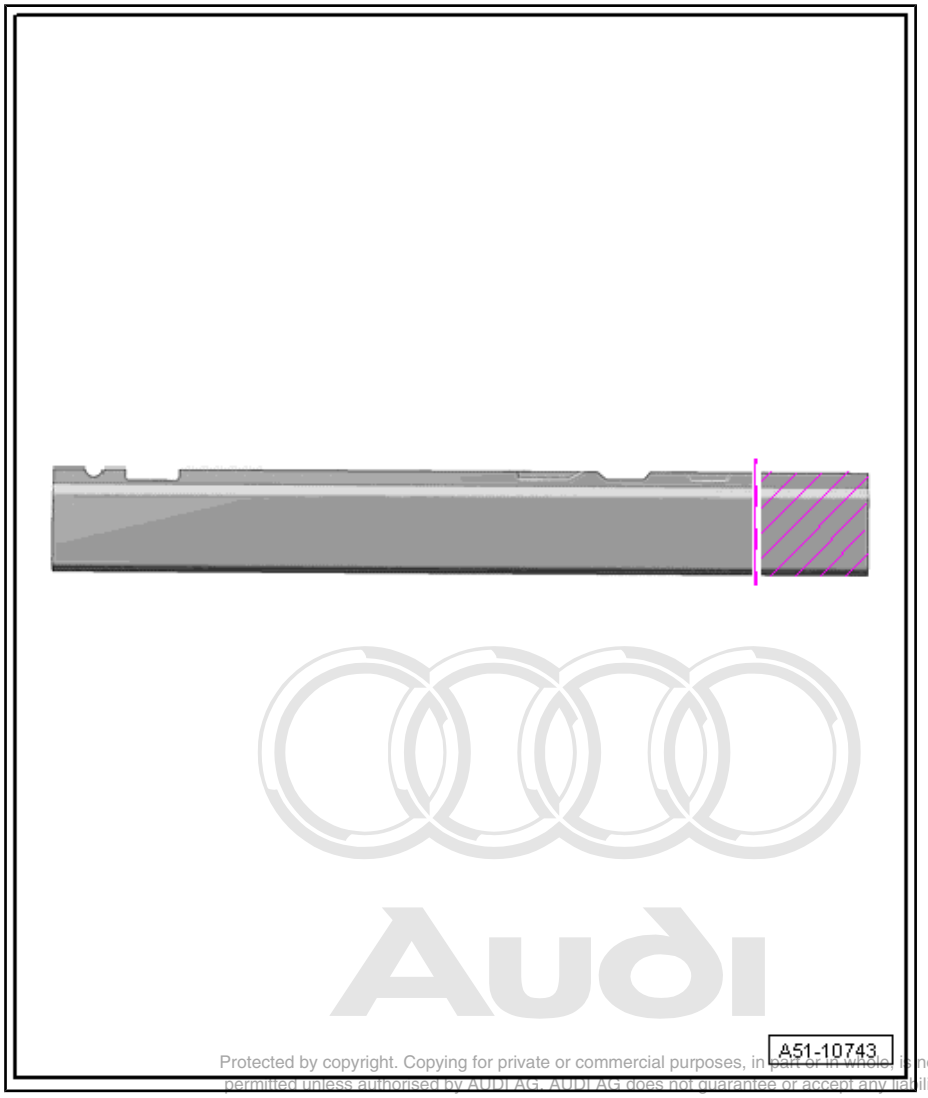

– Drill holes (7 mm ∅) for flow-drill screws.

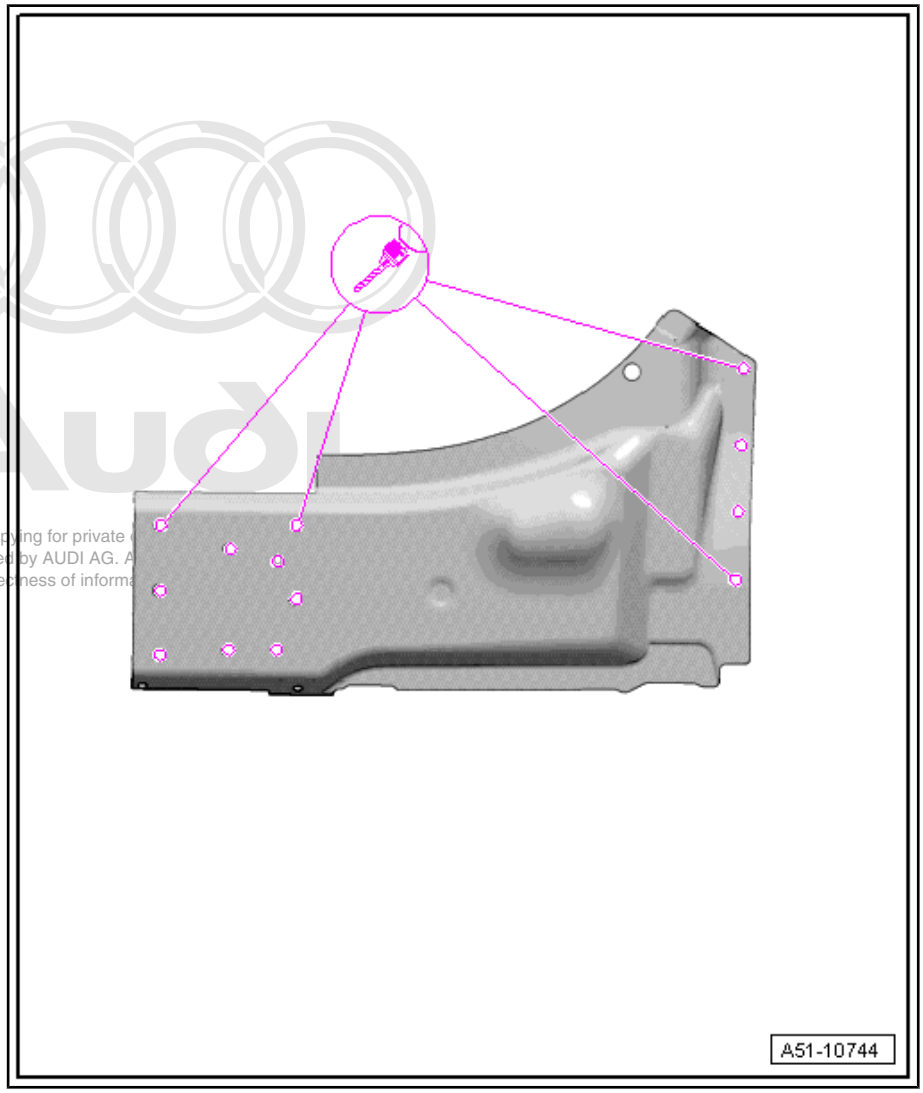

– Cut weld sleeves to size (100 mm).

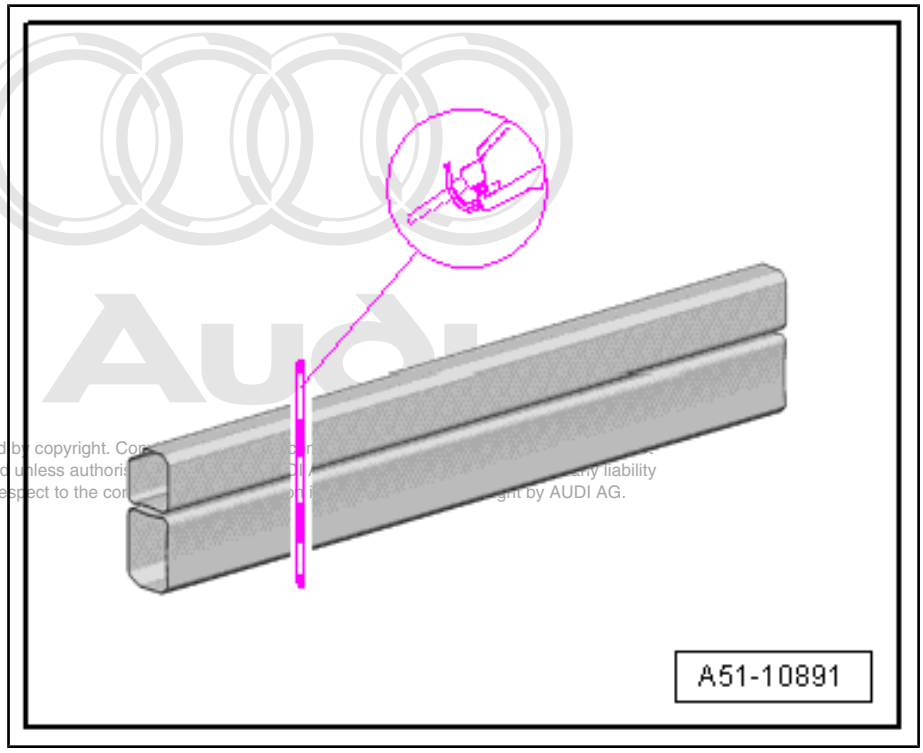

– Rivet in weld sleeves at separating cut in side member with pop rivets 8Z0 809 864.

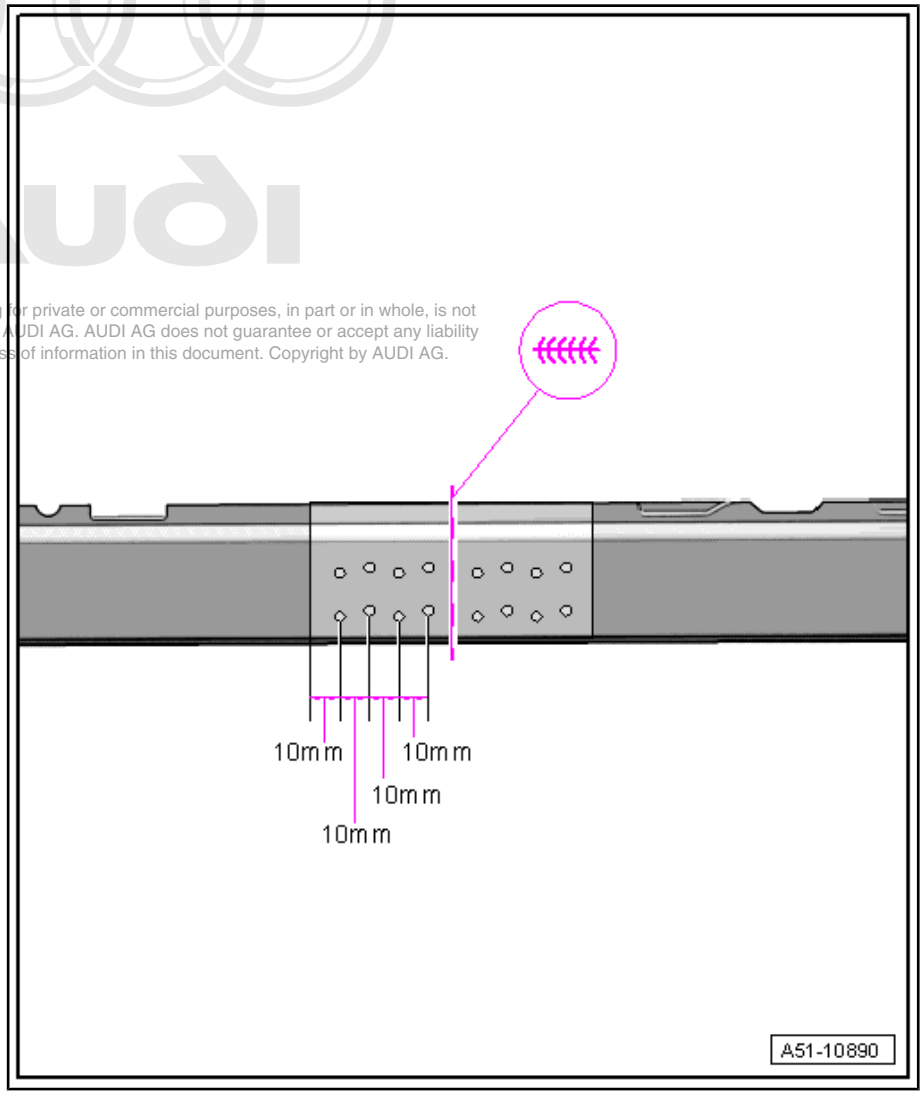

– Drill additional holes (7 mm ∅) for securing B-pillar.

Dimension -a- = 15 mm

Dimension -b- = 10 mm

Dimension -c- = 20 mm

Dimension -d- = 40 mm

Dimension -e- = 6 mm

Dimension -f- = 25 mm

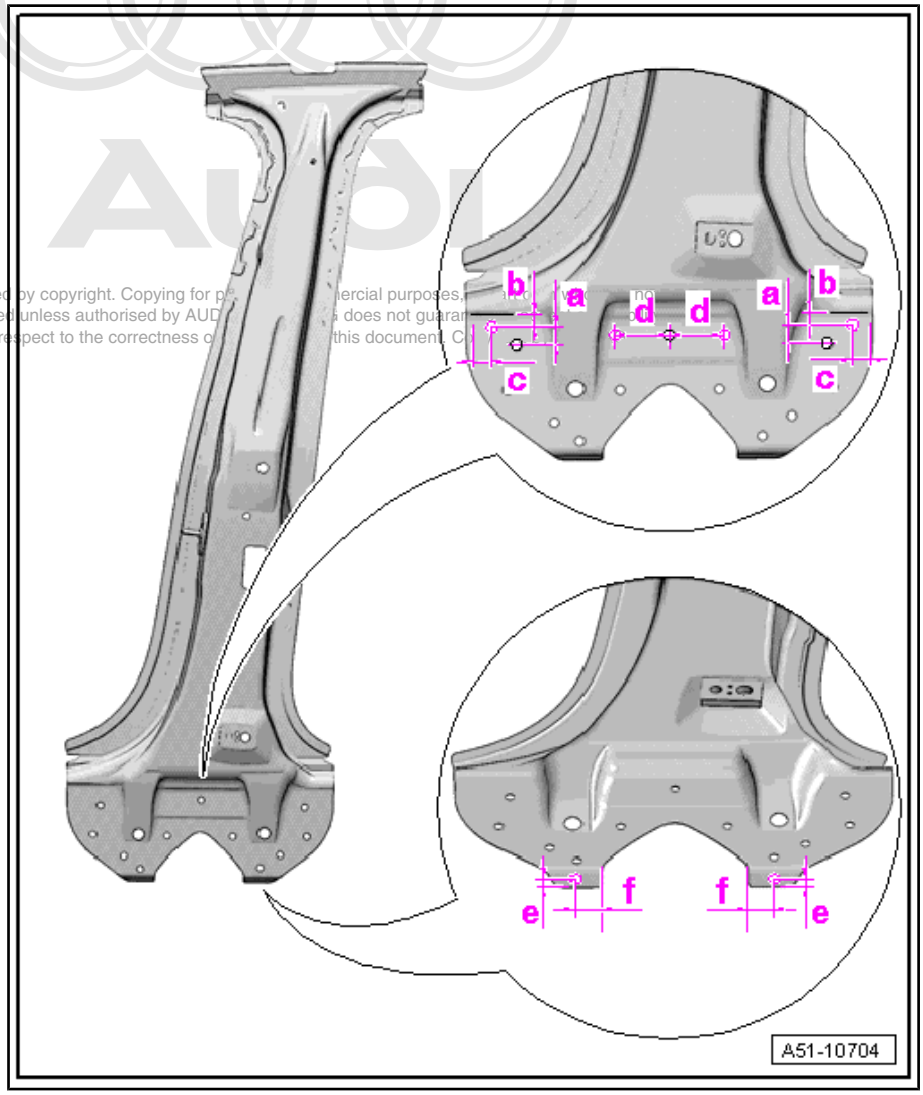

Preparing joints for adhesive application

- Prepare flanges on body and new parts for welding.
- Clean flanges on body and new parts with cleaning solution - D 009 401 04- .
- Prepare bonding area with silicate stone - DA 009 800 - and clean.
- Apply aluminium primer - DA 009 801 - to bonding surfaces using applicator - D 009 500 25 - .
- Apply 2-component epoxy adhesive - DA 180 A00 A2 - to contact area on inside of rear side member -a- using double cartridge gun - VAS 6453- .
- Apply 2-component body adhesive - DA 180 A00 A2- to contact area at B-pillar -b- using double cartridge gun - VAS 6453- .

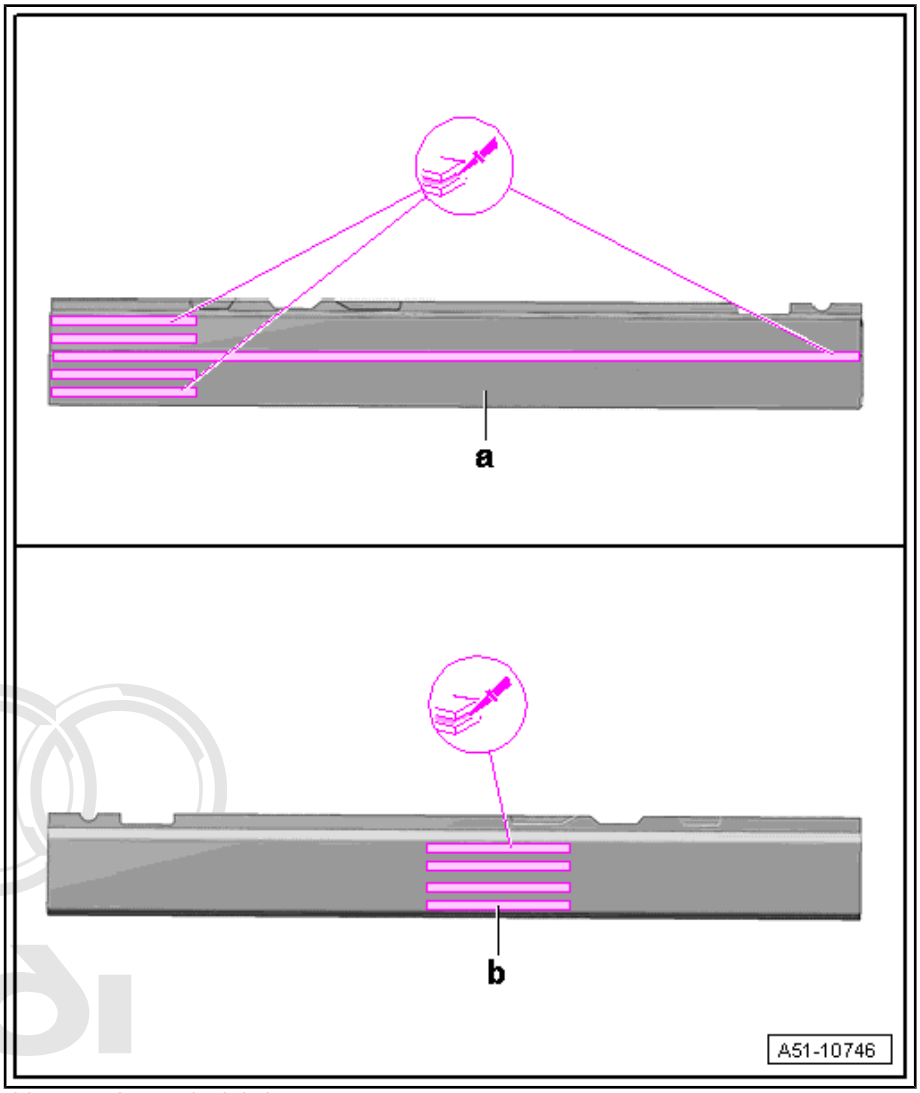

– Drill holes (4.0 mm ∅) for flow-drill screws ⇒ page 4 .

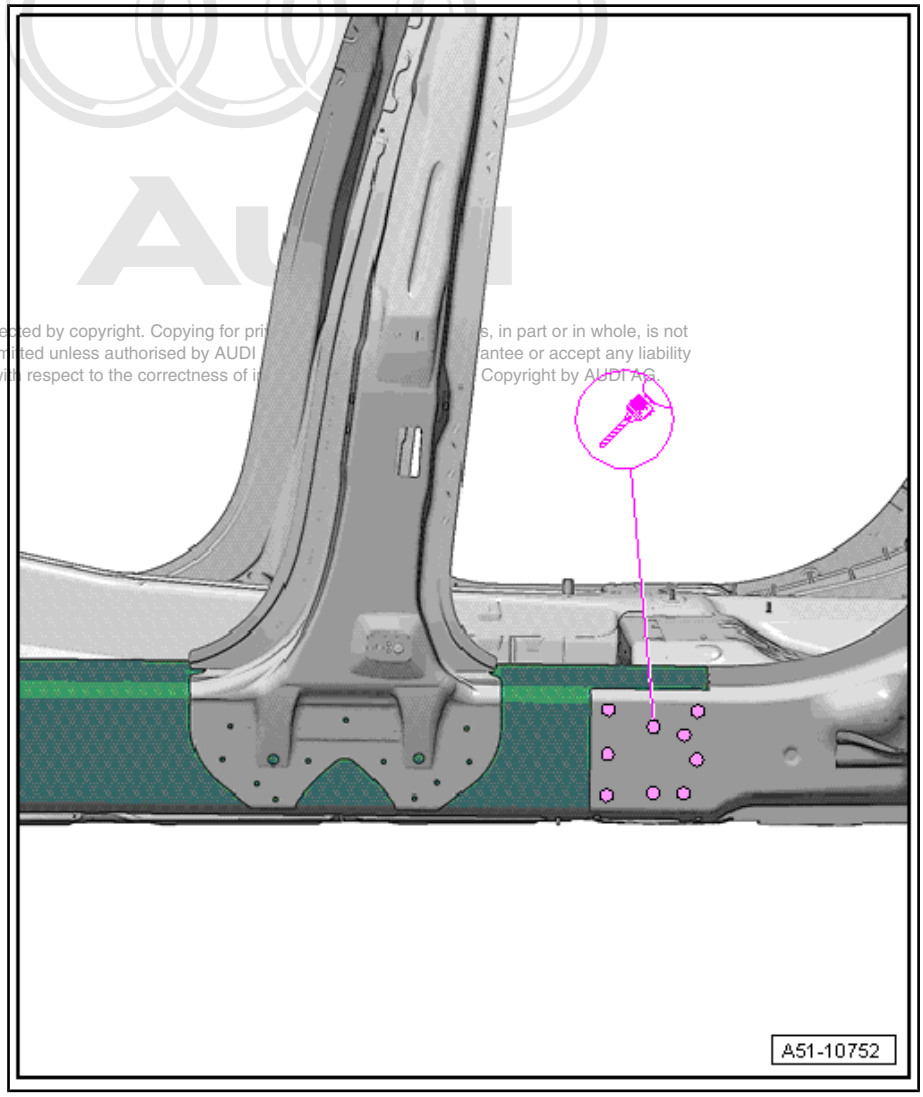

Welding in

- Match up inner side member reinforcement and fix in position.
- Check fit relative to adjacent parts.
- Weld in at separating cut using shielded arc welding equipment : SG continuous seam.

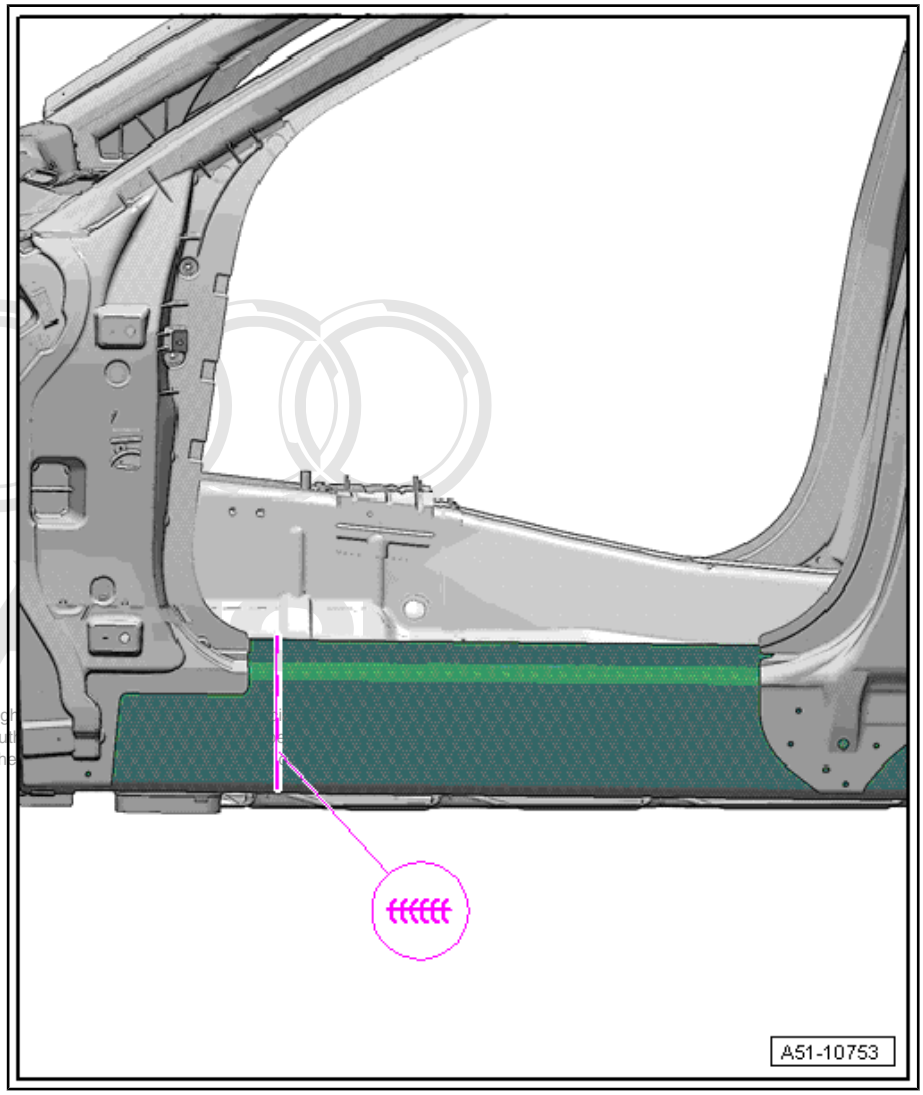

Riveting in

- Rivet in side member reinforcement -a- with 6 x 10 mm solid rivets using rechargeable riveter - VAS 5279 A- or compact booster - VAS 6790 - . For attachments see ⇒ page 15 .
- Punch holes using attachment ⇒ page 15 .
- Set solid rivets using attachment ⇒ page 15 .
- Secure original joint with flow-drill screws using socket for flow-drill screws - VAS 6426 - ⇒ page 4 .

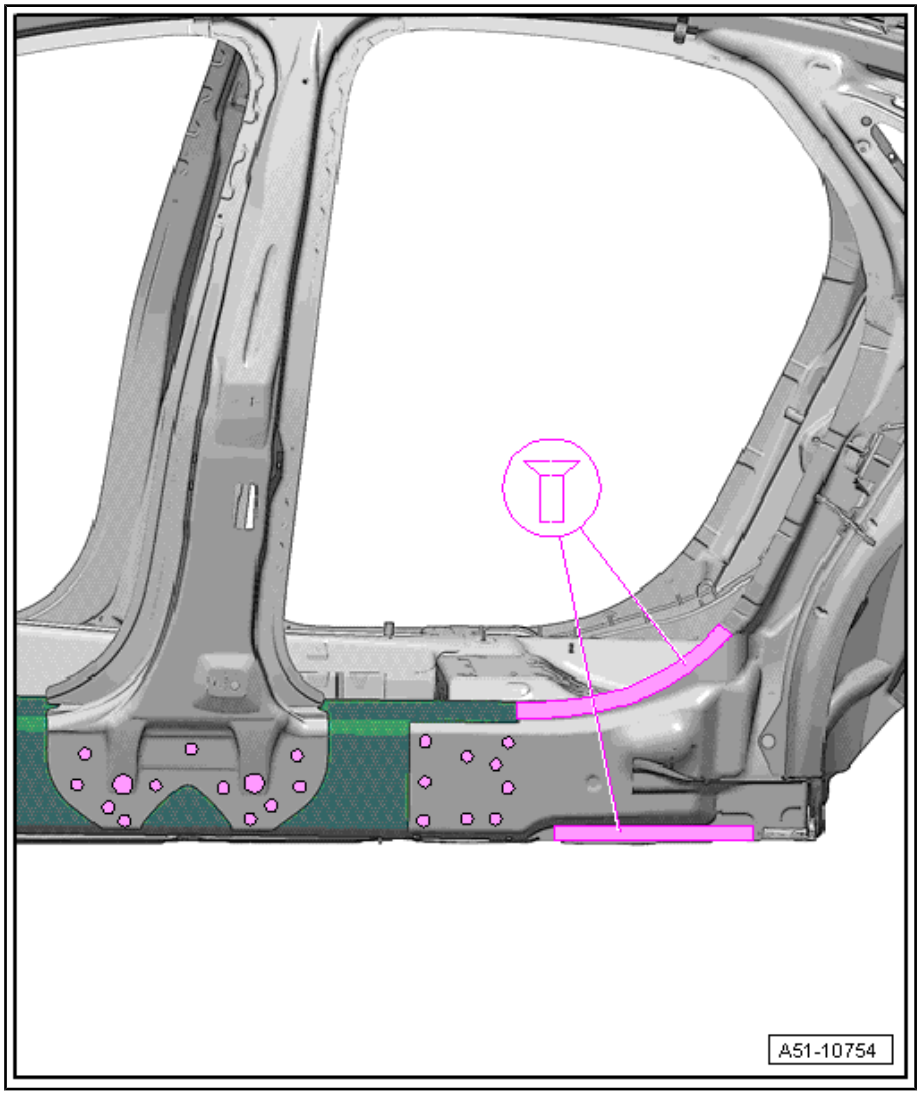

- Installing outer side member ⇒ page 214

Note

- *After completing the joint, the vehicle must be left standing for 24 hours on a level surface at a room temperature of 15°C to allow the adhesive components to harden (curing time).*
- *Do not continue working on the vehicle until the curing time has elapsed.*

53 – Body - rear

1 Permitted separating cuts on complete side panel

Note

- *Use only welding equipment approved by AUDI AG.*
- *SG continuous weld seams are approved for the separating cuts shown in the illustration.*

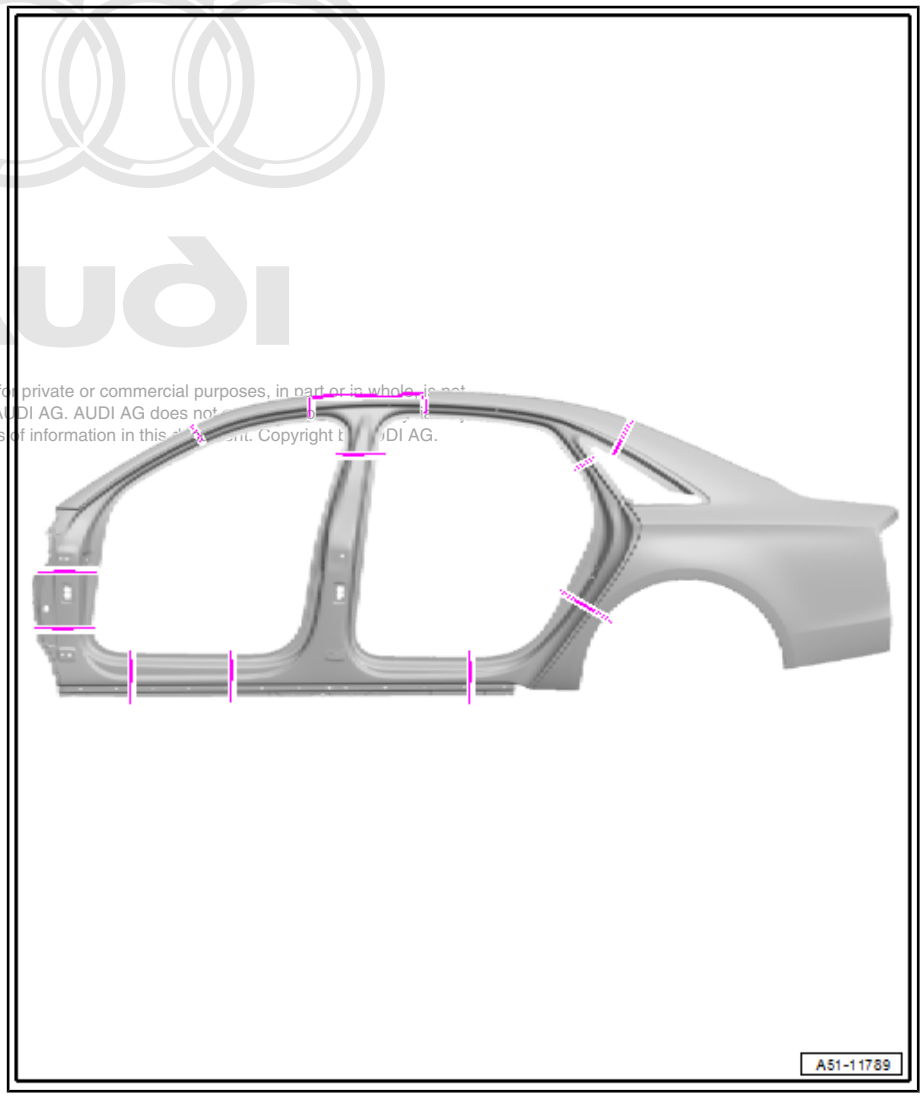

RO: 53 05 55 00

2 Tail light mounting - Renewal

1 - Outer cross panel

2 - Tail light mounting

3 - Cross panel

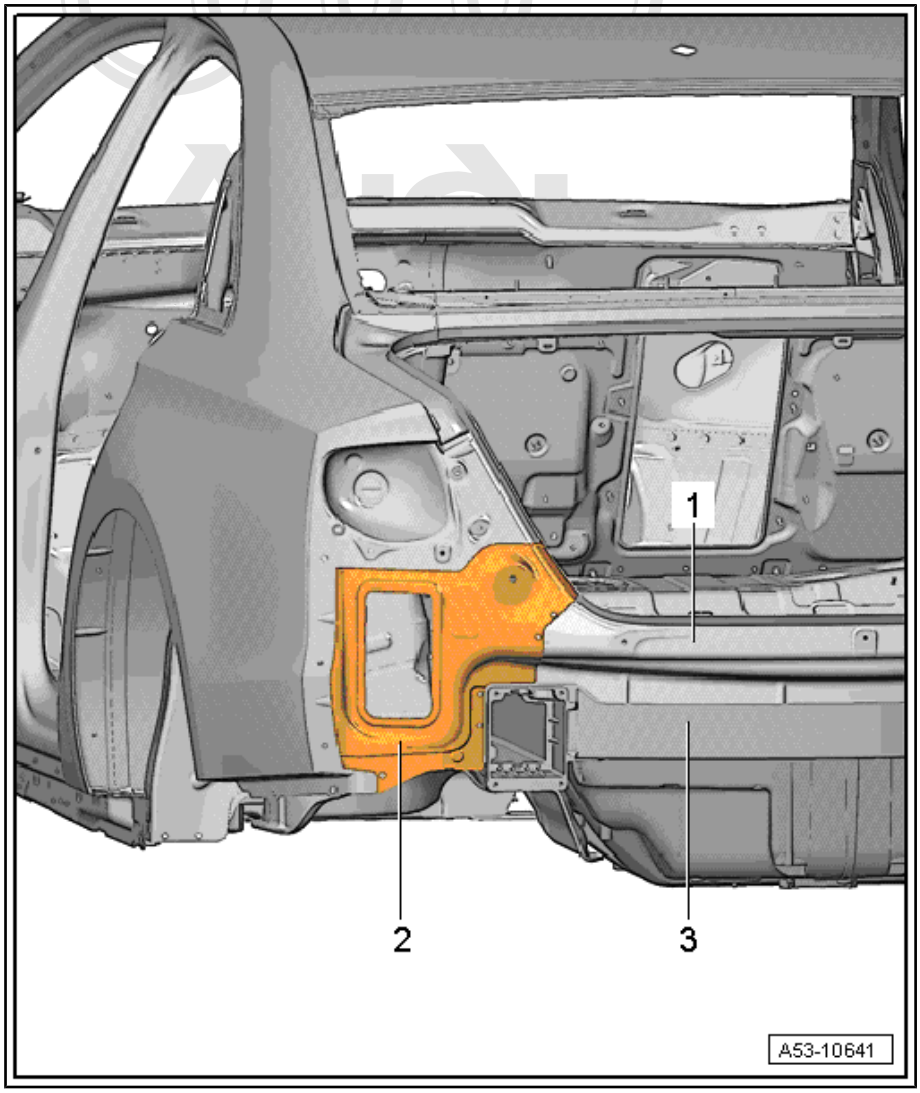

2.1 Notes for vehicles with hybrid drive

WARNING

Safety hazard: the engine can start unexpectedly.

Before carrying out general work on a vehicle with high-voltage electrical system, switch off the ignition and remove the ignition key from the vehicle.

DANGER!

When working on a vehicle with the ignition switched on or while the drive system is active, the engine can start unexpectedly and exhaust fumes can cause a health hazard in closed rooms. Moving parts can trap or draw in parts of the body and/or clothing (safety hazard).

Before switching on the ignition, perform the following steps:

- *Move selector lever to position P*
- *Activate parking brake*
- *Switch off ignition*
- *Open bonnet*
- *Connect battery charger (e.g. - VAS 5095A-) to jump-start connections of 12 V electrical system.*
- *Switch on ignition*

WARNING

Working on vehicles with high-voltage wiring:

- *Do not support yourself or tools on high-voltage wiring or associated components --> this can damage the insulation.*
- *High-voltage wiring must not be excessively bent or kinked --> this can damage the insulation.*
- *The round high-voltage connectors are colour-coded with an external coloured ring and are provided with mechanical coding or guide lugs. It is important to observe this coding when joining up the round high-voltage connectors; otherwise the connectors can be damaged.*

DANGER!

Risk of fatal injury if high-voltage components are damaged.

Observe the following when working in the vicinity of high-voltage components or wiring:

- *It is not permitted to use cutting or forming tools, other sharp-edged tools or heat sources such as welding, brazing, soldering, hot air or thermal bonding equipment.*
- *Before starting work, visually inspect the high-voltage components in the areas involved.*
- *Before working in the engine compartment, visually inspect the power and control electronics for electric drive - JX1- , electric drive motor - V141- , air conditioner compressor - V470- and high-voltage wiring.*
- *Before working on the vehicle underbody, visually inspect the high-voltage wiring and covers.*
- *Before working on the rear section of the vehicle, visually inspect the high-voltage wiring and the hybrid battery unit with the maintenance connector for high-voltage system - TW - .*
- *Visually inspect all potential equalisation lines.*

Check the following when making the visual inspection:

- *There must be no external damage on any component.*
- *The insulation of the high-voltage wiring and potential equalisation lines must not be damaged.*
- *There must be no unusual deformation of the high-voltage wiring.*
- *All high-voltage components must be identified by a red warning sticker.*

DANGER!

High voltage can cause fatal injury.

Danger of severe or fatal injuries from electric shock.

- *The high-voltage system may only be re-energised by a suitably qualified person (Audi high-voltage technician).*
- *The system may only be re-energised using the vehicle diagnostic tester via "Guided Fault Finding".*
- *The vehicle is then made ready for operation again by the qualified person (Audi high-voltage technician).*
- *The qualified person (Audi high-voltage technician) marks the vehicle by attaching the appropriate warning signs.*

DANGER!

High voltage can cause fatal injury.

Danger of severe or fatal injuries from electric shock.

- *The high-voltage system may only be de-energised by a suitably qualified person (Audi high-voltage technician).*
- *It must be definitely confirmed that the high-voltage system is de-energised. The system may only be de-energised using the vehicle diagnostic tester via "Guided Fault Finding".*
- *The qualified person (Audi high-voltage technician) confirms that the system is de-energised and ensures that it cannot be re-energised by fitting the locking cap - T40262- and by storing the ignition key and the maintenance connector for high-voltage system - TW - in a safe place.*
- *The qualified person (Audi high-voltage technician) marks the vehicle by attaching the appropriate warning signs.*

Note

Please refer to the Electronic parts catalogue when ordering replacement parts.

WARNING

Accidents can be caused if the driver is distracted by test equipment while road-testing, or if test equipment is not properly secured.

Injuries can be caused if the passenger's airbag is triggered in a collision.

- *The use of test equipment while driving causes distraction.*
- *There is an increased risk of injury if test equipment is not secured.*
- *Move the front passenger's seat back as far as it will go.*
- *Use only the vehicle diagnostic and service information system - VAS 5052- or the diagnostic system - VAS 5053- .*
- *The test equipment -1- must rest flat on the passenger's thighs (as shown in illustration) and must be operated by the passenger.*

2.2 Tools

Special tools and workshop equipment required

- Socket for flow-drill screws - VAS 6426 -
- Drill - VAS 5144-
- Compact booster - VAS 6790-

- Pneumatic glue gun - V.A.G 2005 B-

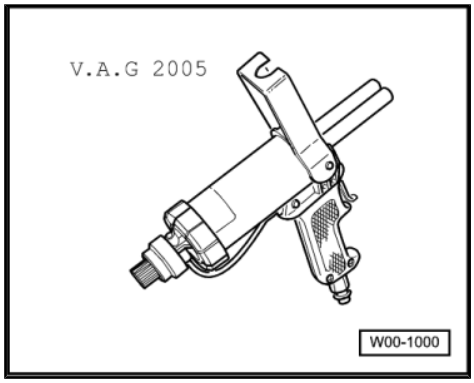

- Shielded arc welding equipment - VAS 6388-
- Rechargeable riveter - VAS 5279 A-
- Alternatively, you can use the rechargeable riveter - VAS 5279 B- . This is a complete set.

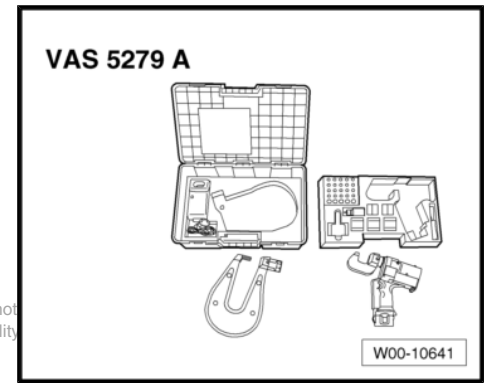

- Pneumatic jig-saw - VAS 5108 - or body saw - VAS 6598 - or -VAS 6780-

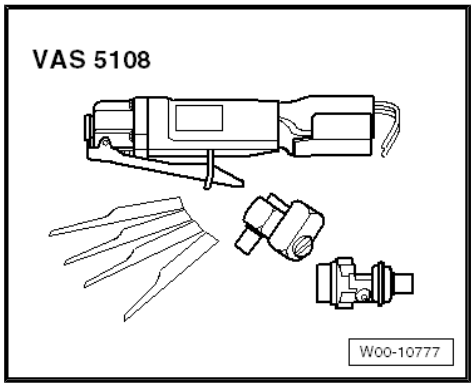

2.3 Procedure

Cutting locations

– Roughly cut out tail light mounting using body saw .

– Separate original joint using rechargeable riveter - VAS 5279 A- or compact booster - VAS 6790- . For attachments see ⇒ page 15 .

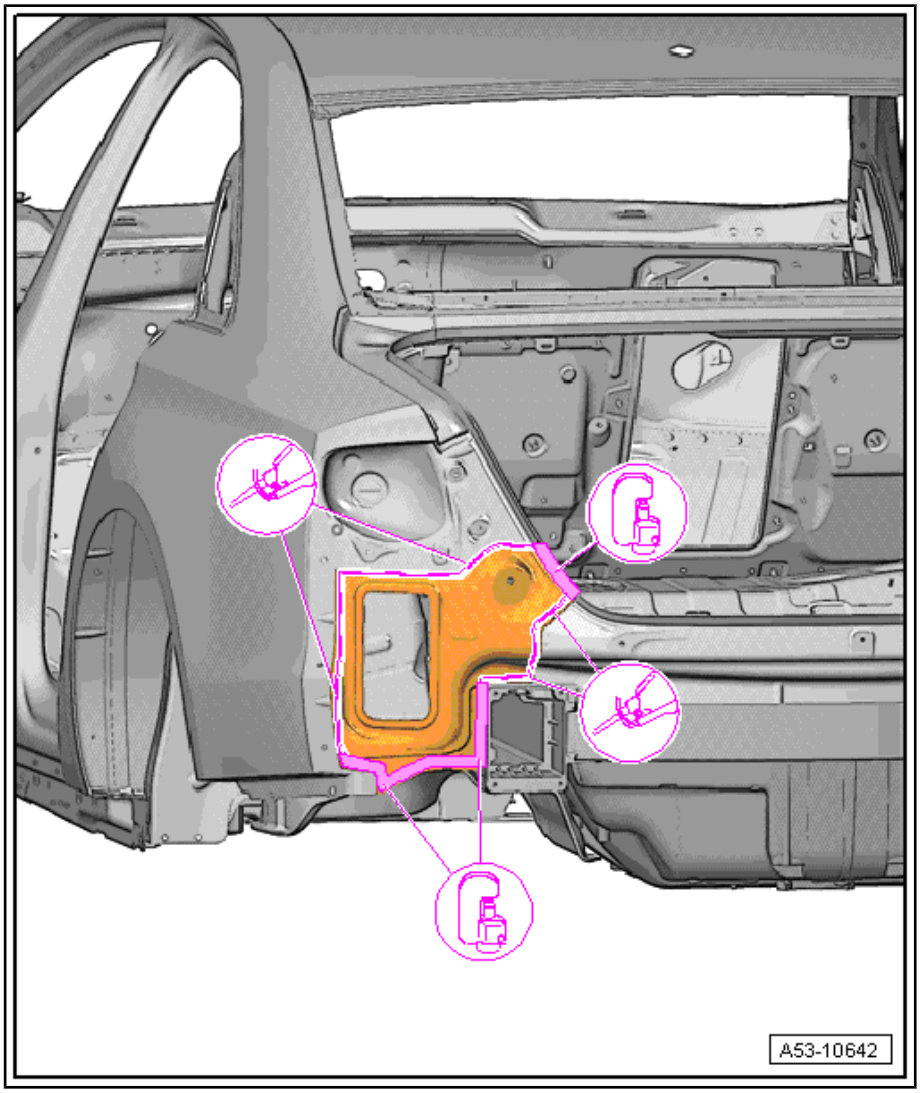

– Remove remaining material using compact angle grinder .

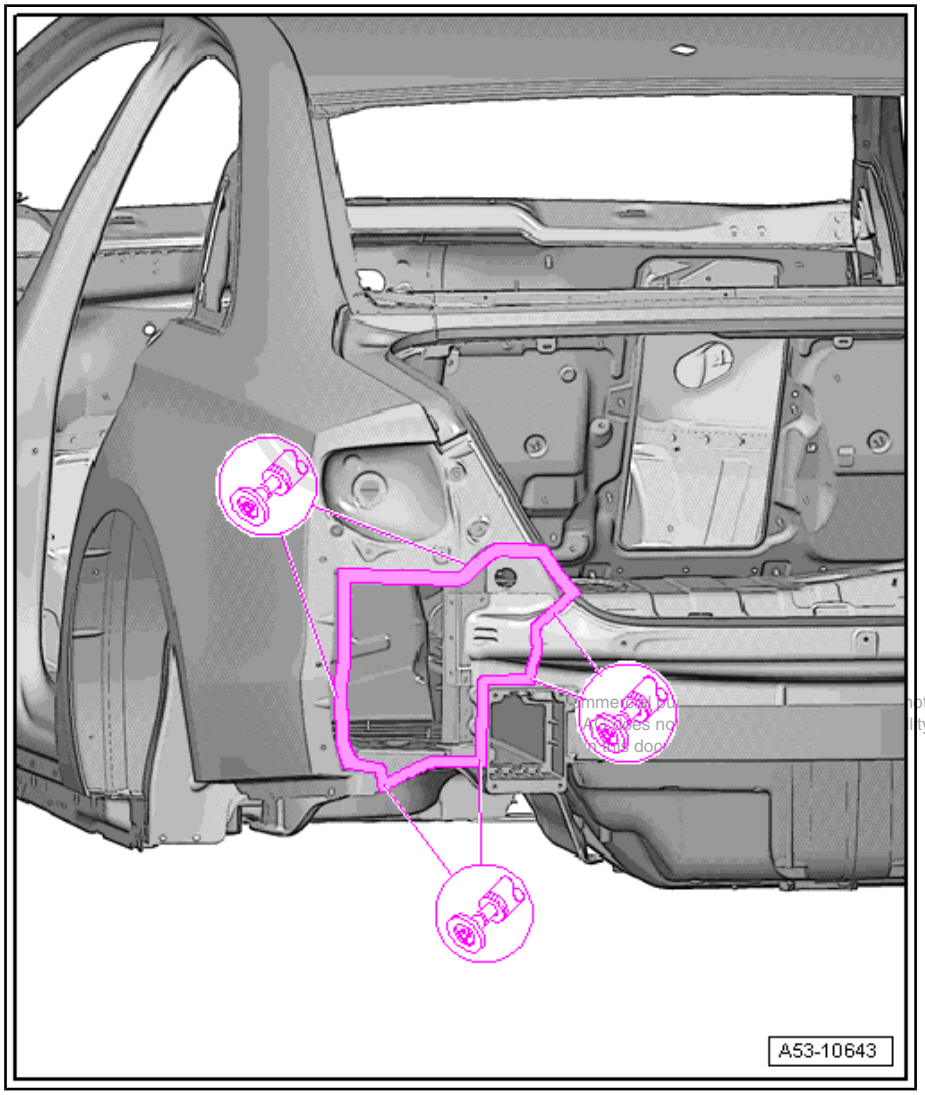

Replacement part

- Tail light mounting
- Punch rivets (self-piercing rivets)

Note

Check dimensional accuracy with respect to rear lid.

Preparing joints for adhesive application

– Clean bonding area with cleaning solution - D 009 401 04- .

– Prepare bonding area with silicate stone - DA 009 800 - and clean.

– Apply aluminium primer - DA 009 801 - to bonding surfaces using applicator - D 009 500 25 - .

– Apply 2-component epoxy adhesive - DA 001 730 A2- to entire riveting area using pneumatic glue gun - V.A.G 2005 B- .

– Insert rear cross panel.

Riveting in

– Rivet in cross panel using rechargeable riveter - VAS 5279 A- or compact booster - VAS 6790 - . For attachments see ⇒ page 15 .

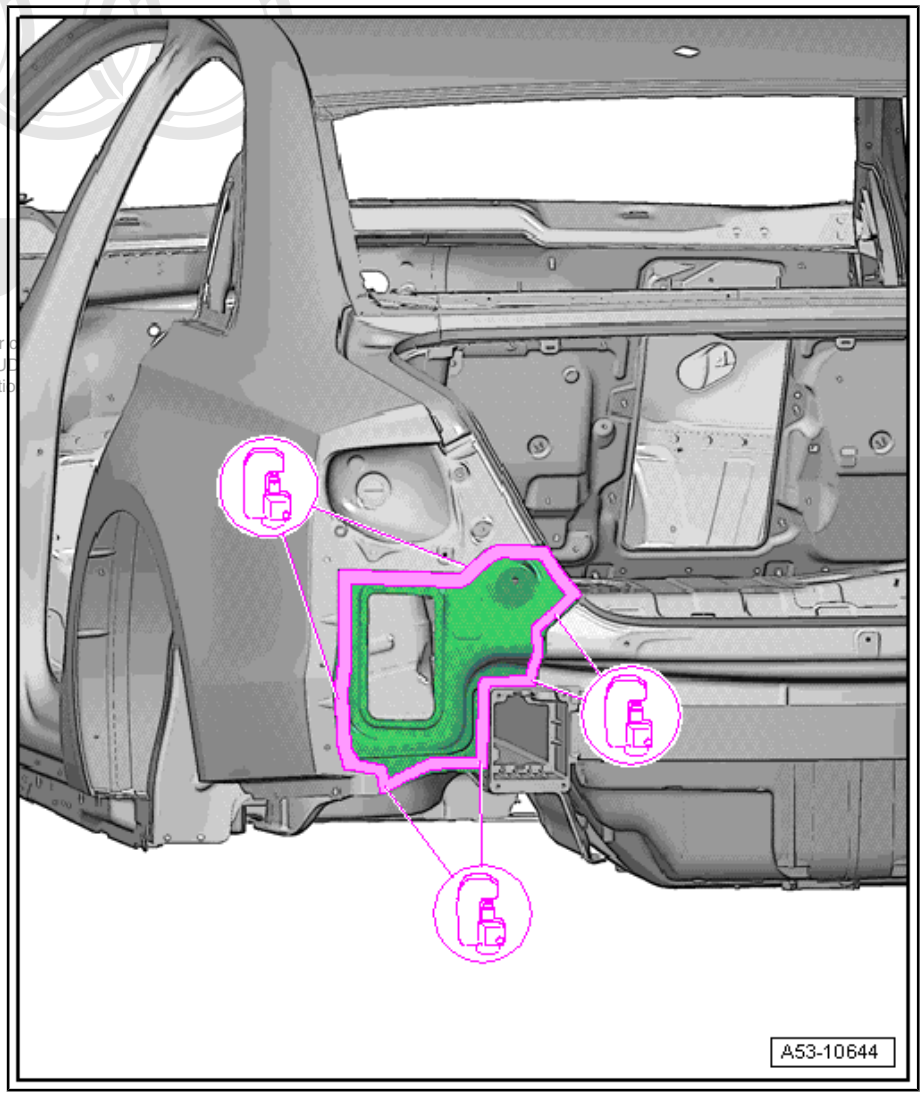

RO: 53 05 55 00

3 Rear cross panel - Renewal

1 - Outer cross panel

2 - Tail light mounting (right-side)

3 - Bonded area

4 - Cross panel

5 - Tail light mounting (left-side)

6 - Separating cut

Partial renewal
Partial renewal is possible with these separating cuts.

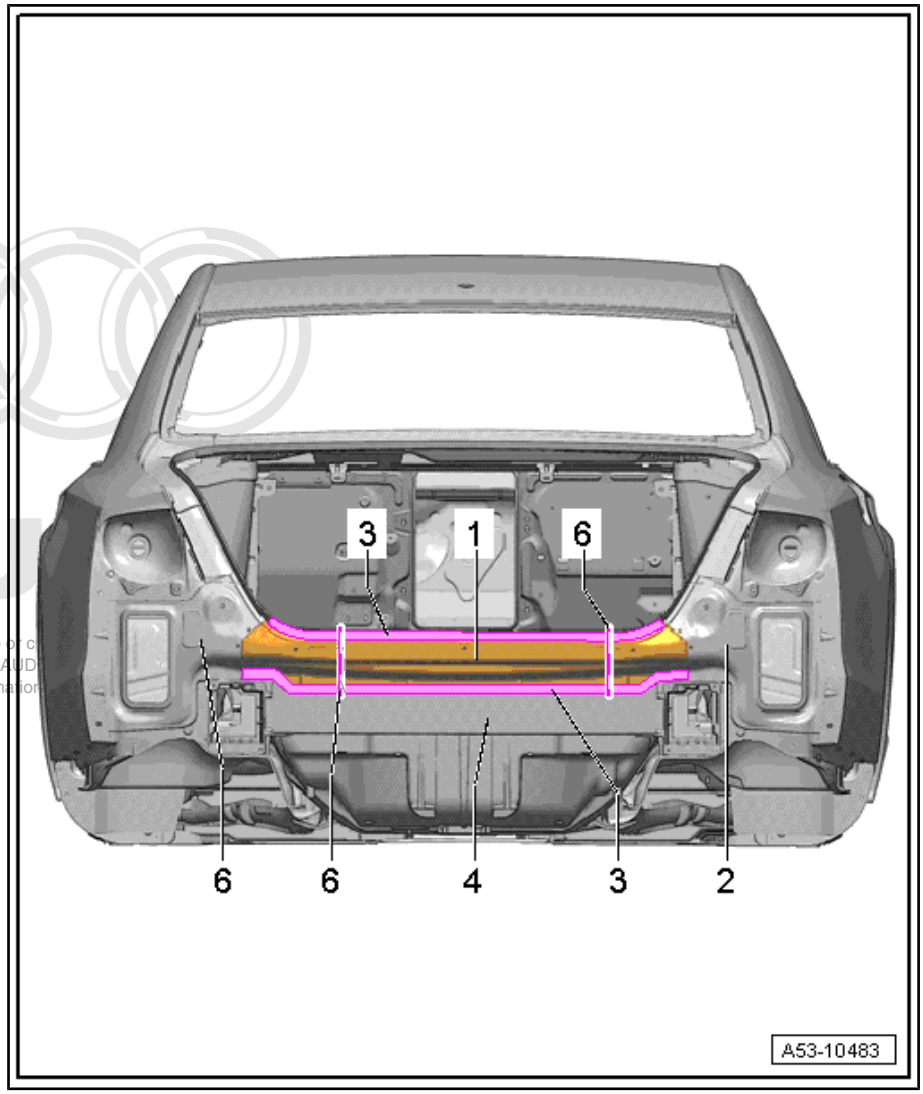

3.1 Notes for vehicles with hybrid drive

WARNING

Safety hazard: the engine can start unexpectedly.

Before carrying out general work on a vehicle with high-voltage electrical system, switch off the ignition and remove the ignition key from the vehicle.

DANGER!

When working on a vehicle with the ignition switched on or while the drive system is active, the engine can start unexpectedly and exhaust fumes can cause a health hazard in closed rooms. Moving parts can trap or draw in parts of the body and/or clothing (safety hazard).

Before switching on the ignition, perform the following steps:

- *Move selector lever to position P*
- *Activate parking brake*
- *Switch off ignition*
- *Open bonnet*
- *Connect battery charger (e.g. - VAS 5095A-) to jump-start connections of 12 V electrical system.*
- *Switch on ignition*

WARNING

Working on vehicles with high-voltage wiring:

- *Do not support yourself or tools on high-voltage wiring or associated components --> this can damage the insulation.*
- *High-voltage wiring must not be excessively bent or kinked --> this can damage the insulation.*
- *The round high-voltage connectors are colour-coded with an external coloured ring and are provided with mechanical coding or guide lugs. It is important to observe this coding when joining up the round high-voltage connectors; otherwise the connectors can be damaged.*

DANGER!

Risk of fatal injury if high-voltage components are damaged.

Observe the following when working in the vicinity of high-voltage components or wiring:

- *It is not permitted to use cutting or forming tools, other sharp-edged tools or heat sources such as welding, brazing, soldering, hot air or thermal bonding equipment.*
- *Before starting work, visually inspect the high-voltage components in the areas involved.*
- *Before working in the engine compartment, visually inspect the power and control electronics for electric drive - JX1- , electric drive motor - V141- , air conditioner compressor - V470- and high-voltage wiring.*
- *Before working on the vehicle underbody, visually inspect the high-voltage wiring and covers.*
- *Before working on the rear section of the vehicle, visually inspect the high-voltage wiring and the hybrid battery unit with the maintenance connector for high-voltage system - TW - .*
- *Visually inspect all potential equalisation lines.*

Check the following when making the visual inspection:

- *There must be no external damage on any component.*
- *The insulation of the high-voltage wiring and potential equalisation lines must not be damaged.*
- *There must be no unusual deformation of the high-voltage wiring.*
- *All high-voltage components must be identified by a red warning sticker.*

DANGER!

High voltage can cause fatal injury.

Danger of severe or fatal injuries from electric shock.

- *The high-voltage system may only be re-energised by a suitably qualified person (Audi high-voltage technician).*
- *The system may only be re-energised using the vehicle diagnostic tester via "Guided Fault Finding".*
- *The vehicle is then made ready for operation again by the qualified person (Audi high-voltage technician).*
- *The qualified person (Audi high-voltage technician) marks the vehicle by attaching the appropriate warning signs.*

DANGER!

High voltage can cause fatal injury.

Danger of severe or fatal injuries from electric shock.

- *The high-voltage system may only be de-energised by a suitably qualified person (Audi high-voltage technician).*
- *It must be definitely confirmed that the high-voltage system is de-energised. The system may only be de-energised using the vehicle diagnostic tester via "Guided Fault Finding".*
- *The qualified person (Audi high-voltage technician) confirms that the system is de-energised and ensures that it cannot be re-energised by fitting the locking cap - T40262- and by storing the ignition key and the maintenance connector for high-voltage system - TW - in a safe place.*
- *The qualified person (Audi high-voltage technician) marks the vehicle by attaching the appropriate warning signs.*

Note

Please refer to the Electronic parts catalogue when ordering replacement parts.

WARNING

Accidents can be caused if the driver is distracted by test equipment while road-testing, or if test equipment is not properly secured.

Injuries can be caused if the passenger's airbag is triggered in a collision.

- *The use of test equipment while driving causes distraction.*
- *There is an increased risk of injury if test equipment is not secured.*
- *Move the front passenger's seat back as far as it will go.*
- *Use only the vehicle diagnostic and service information system - VAS 5052- or the diagnostic system - VAS 5053- .*
- *The test equipment -1- must rest flat on the passenger's thighs (as shown in illustration) and must be operated by the passenger.*

3.2 Tools

Special tools and workshop equipment required

- Socket for flow-drill screws - VAS 6426 -
- Drill - VAS 5144-
- Compact booster - VAS 6790-

- Pneumatic glue gun - V.A.G 2005 B-

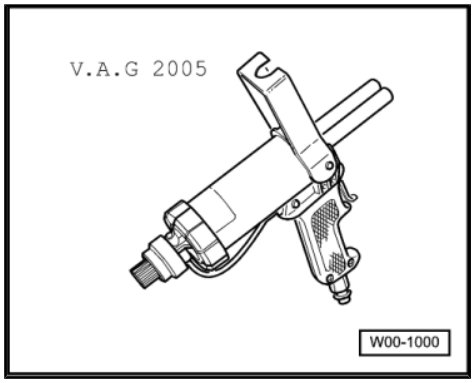

- Shielded arc welding equipment - VAS 6388-
- Rechargeable riveter - VAS 5279 A-
- Alternatively, you can use the rechargeable riveter - VAS 5279 B- . This is a complete set.

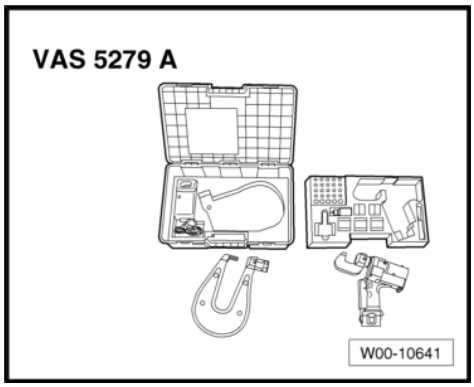

- Pneumatic jig-saw - VAS 5108 - or body saw - VAS 6598 - or -VAS 6780-

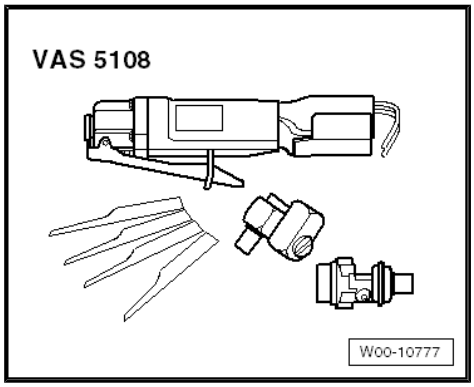

3.3 Procedure

Note

- *The Audi A8 employs flow-drill screws which can be renewed using socket for flow-drill screws - VAS 6426- or -6426/1- and 6426/2 .*
- *Repairing joints with flow-drill screws* ⇒ page 4

Cutting locations

- Tail light mounting removed ⇒ page 242

– Remove flow-drill screws and separate joint -a- using socket for flow-drill screws - VAS 6426 - .

– Mark off separating cuts according to degree of damage and make cuts using body saw .

– Separate original joint using rechargeable riveter - VAS 5279 A- or compact booster - VAS 6790- . For attachments see ⇒ page 15 .

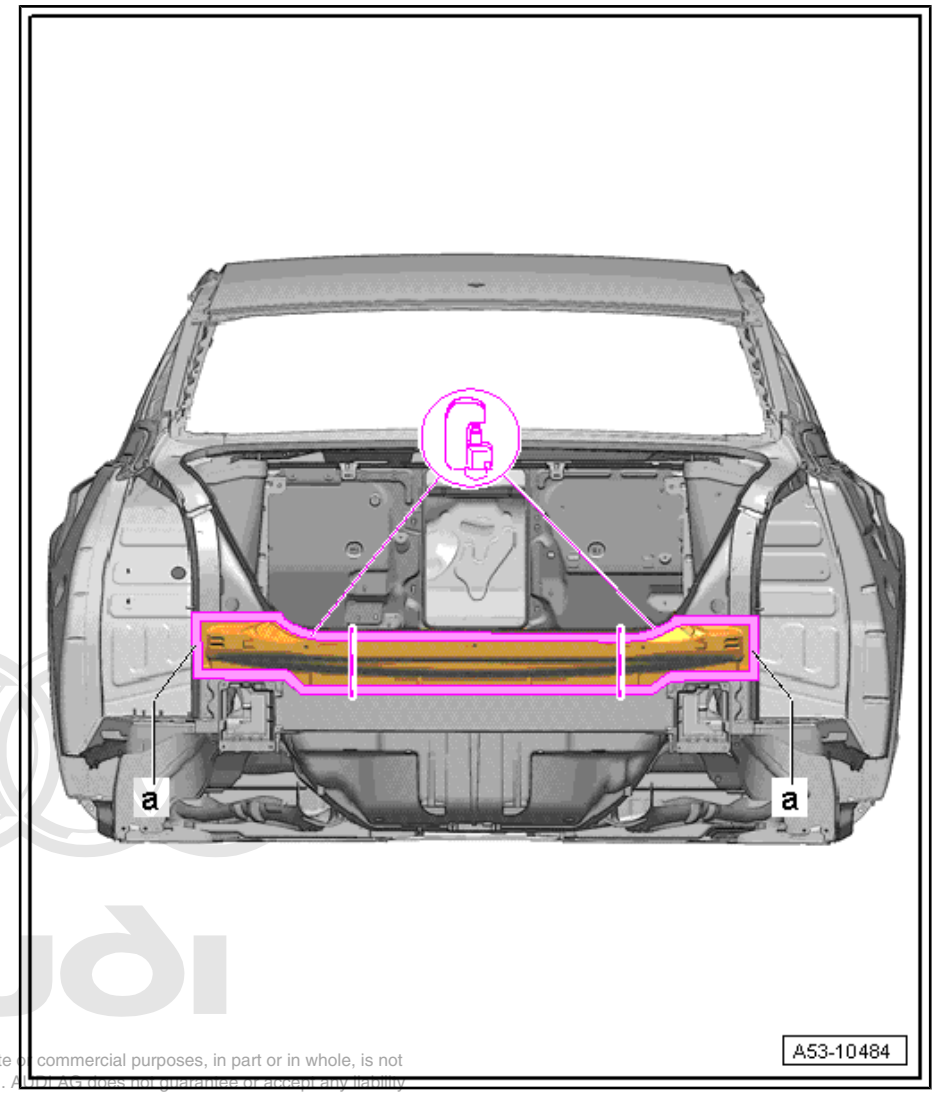

– Remove remaining material using compact angle grinder .

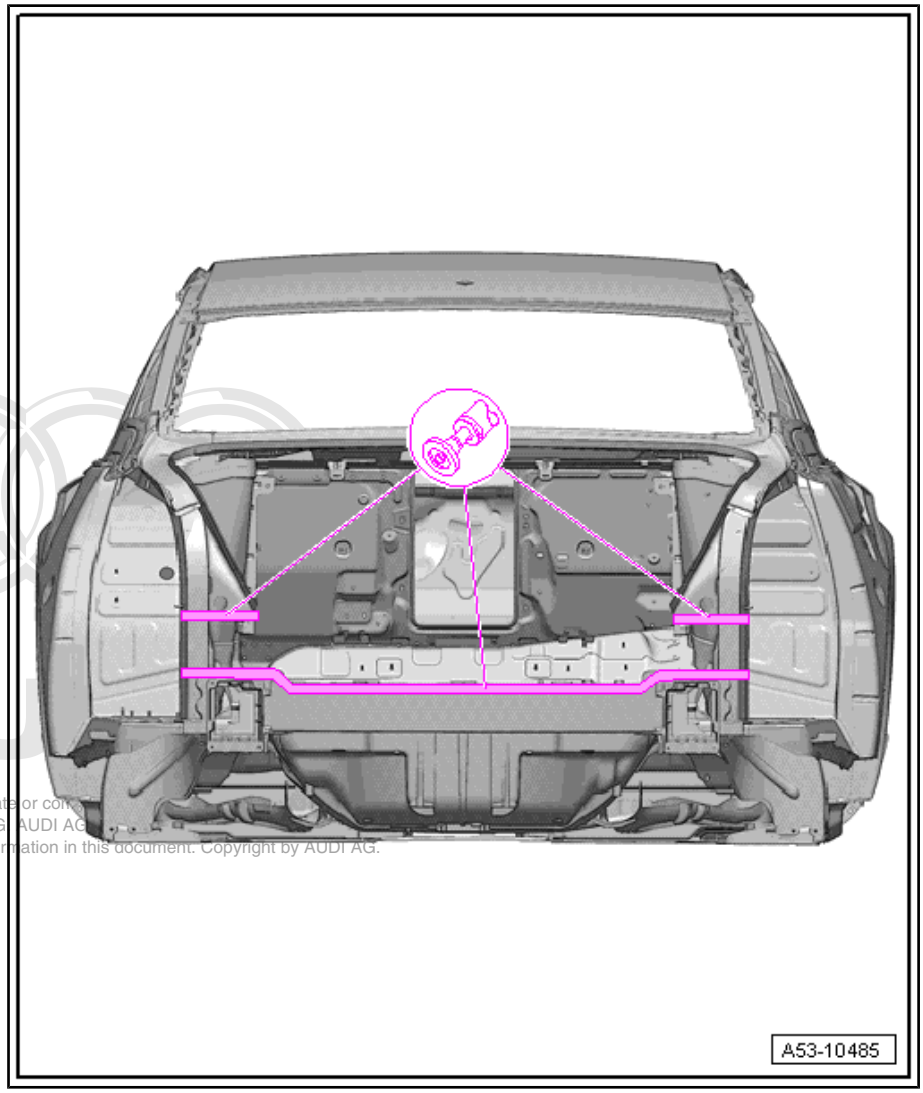

Replacement parts

- Rear cross panel
- Punch rivets (self-piercing rivets)

Note

Check dimensional accuracy with respect to rear lid.

Preparing new parts

– Transfer separating cut to new part and cut off hatched area using body saw .

– Drill holes (7 mm ∅) for flow-drill screws using drill .

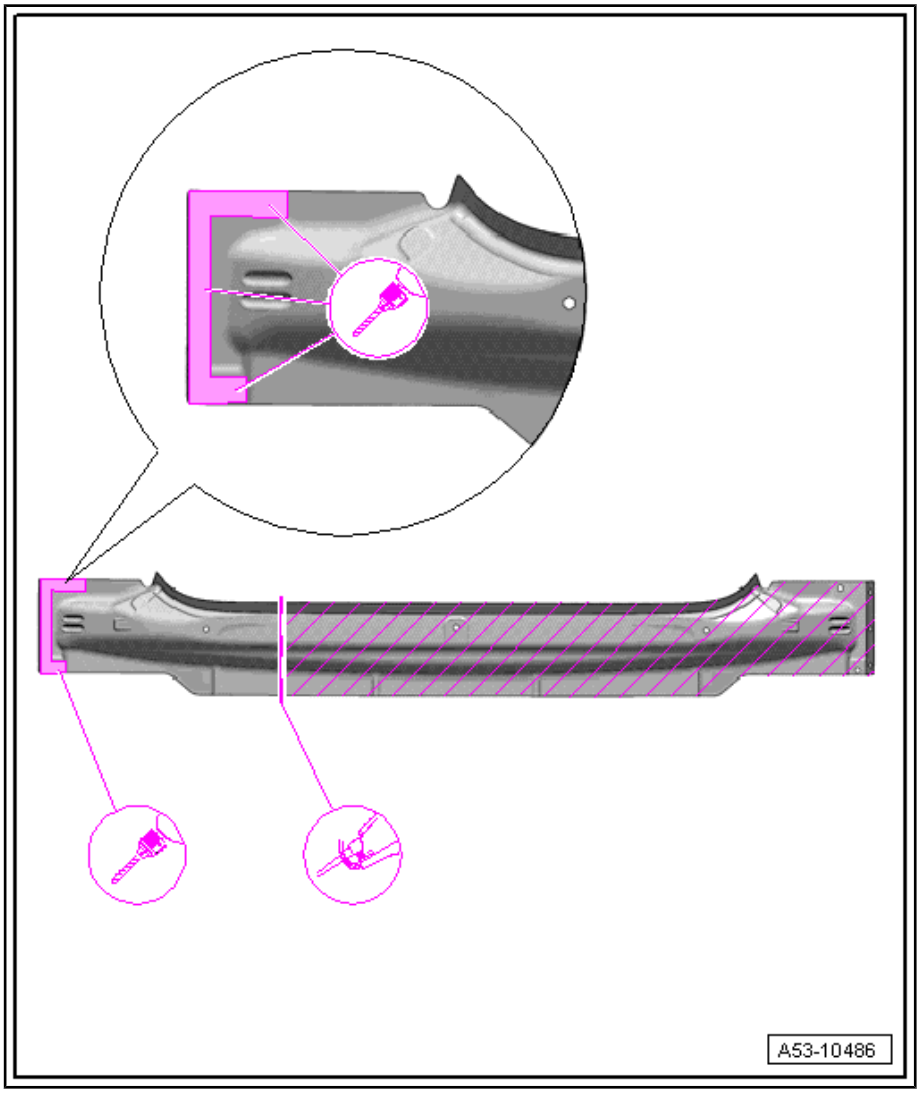

Preparing joints for adhesive application

- Clean bonding area with cleaning solution - D 009 401 04- .
- Prepare bonding area with silicate stone - DA 009 800 - and clean.
- Apply aluminium primer - DA 009 801 - to bonding surfaces using applicator - D 009 500 25 - .
- Apply 2-component epoxy adhesive - DA 001 730 A2- to entire riveting area using pneumatic glue gun - V.A.G 2005 B- .
- Insert rear cross panel.

Riveting in

- Place backing plate of same material behind separating cuts.
- Rivet in cross panel using rechargeable riveter - VAS 5279 A- or compact booster - VAS 6790 - . For attachments see ⇒ page 15 .
- Weld at separating cuts using shielded arc welding equipment : SG continuous seam.
- Secure original joint with flow-drill screws using socket for flow-drill screws - VAS 6426 - ⇒ page 4 .

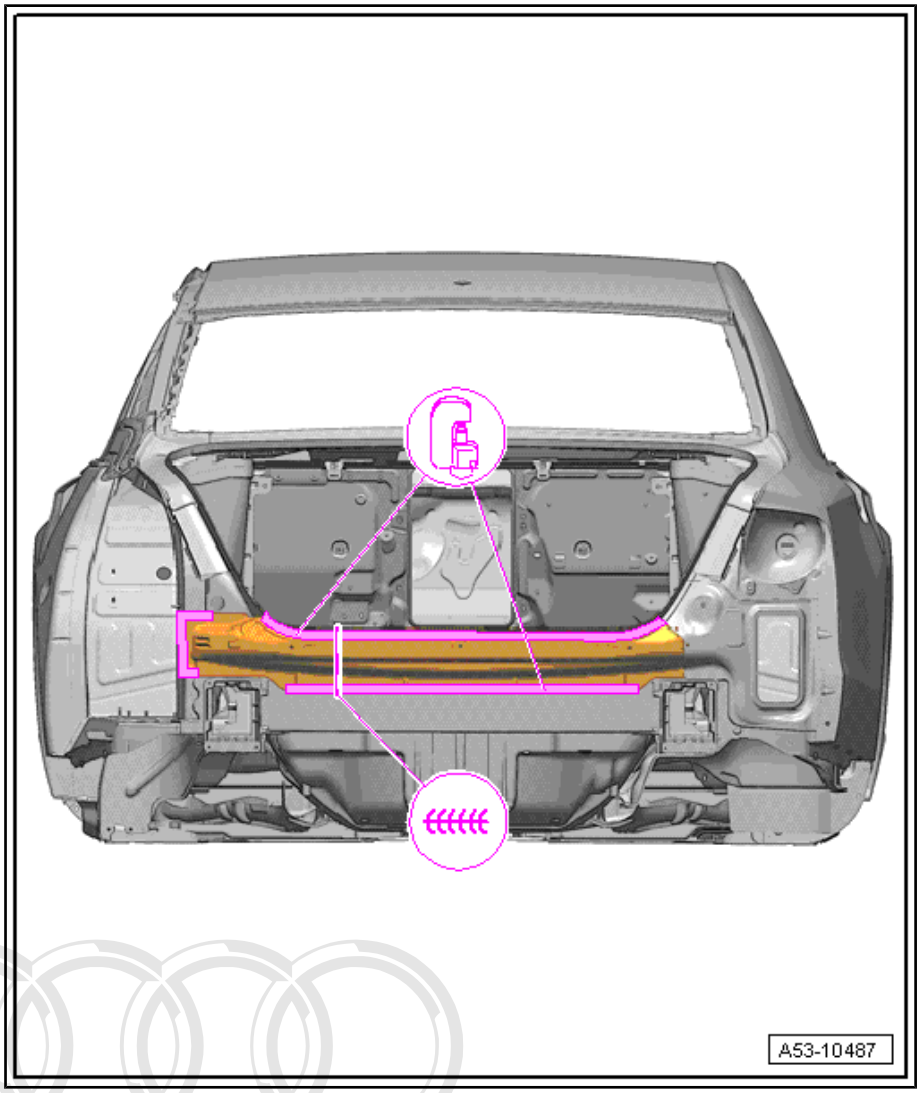

- Install tail light mounting ⇒ page 242 .

RO: 53 16 55 00

4 Inner cross panel - Renewal

1 - Inner cross panel

2 - Left and right longitudinal member

3 - Spare wheel well

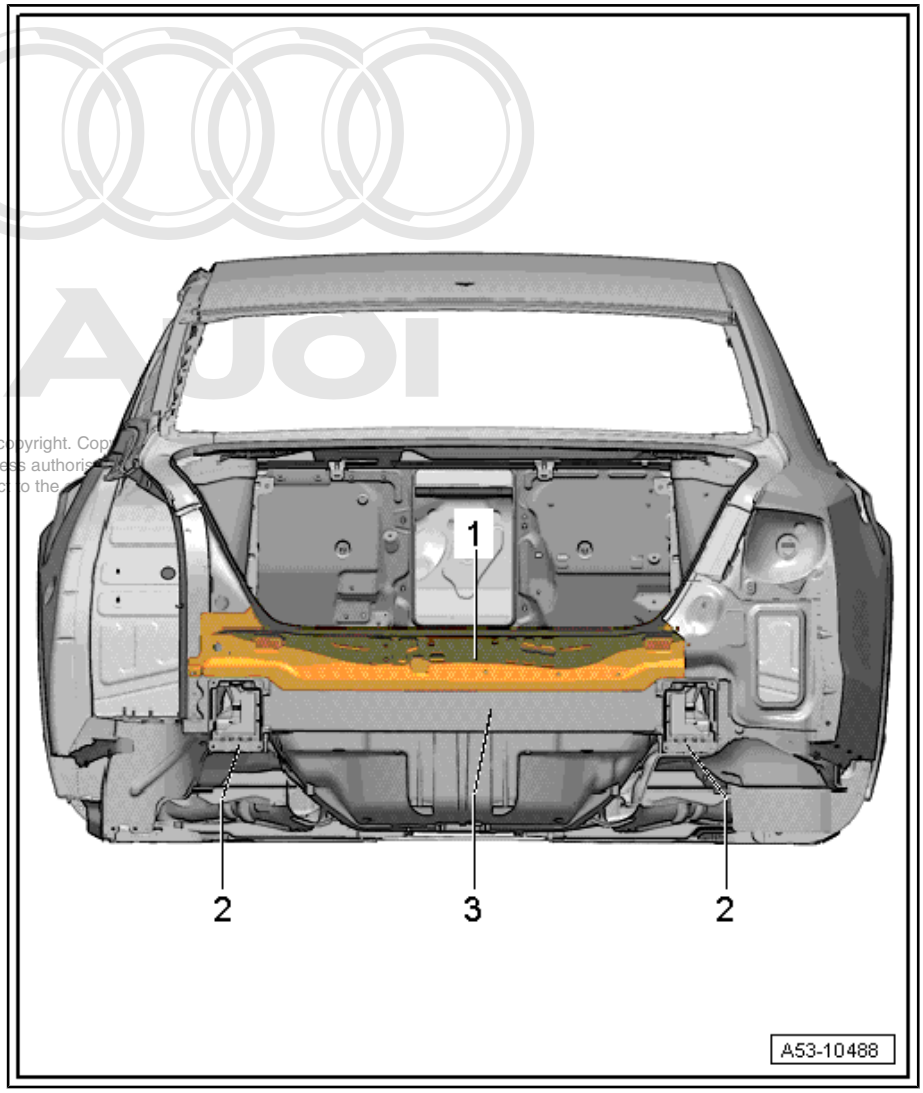

4.1 Notes for vehicles with hybrid drive

WARNING

Safety hazard: the engine can start unexpectedly.

Before carrying out general work on a vehicle with high-voltage electrical system, switch off the ignition and remove the ignition key from the vehicle.

DANGER!

When working on a vehicle with the ignition switched on or while the drive system is active, the engine can start unexpectedly and exhaust fumes can cause a health hazard in closed rooms. Moving parts can trap or draw in parts of the body and/or clothing (safety hazard).

Before switching on the ignition, perform the following steps:

- *Move selector lever to position P*
- *Activate parking brake*
- *Switch off ignition*
- *Open bonnet*
- *Connect battery charger (e.g. - VAS 5095A-) to jump-start connections of 12 V electrical system.*
- *Switch on ignition*

WARNING

Working on vehicles with high-voltage wiring:

- *Do not support yourself or tools on high-voltage wiring or associated components --> this can damage the insulation.*
- *High-voltage wiring must not be excessively bent or kinked --> this can damage the insulation.*
- *The round high-voltage connectors are colour-coded with an external coloured ring and are provided with mechanical coding or guide lugs. It is important to observe this coding when joining up the round high-voltage connectors; otherwise the connectors can be damaged.*

DANGER!

Risk of fatal injury if high-voltage components are damaged.

Observe the following when working in the vicinity of high-voltage components or wiring:

- *It is not permitted to use cutting or forming tools, other sharp-edged tools or heat sources such as welding, brazing, soldering, hot air or thermal bonding equipment.*
- *Before starting work, visually inspect the high-voltage components in the areas involved.*
- *Before working in the engine compartment, visually inspect the power and control electronics for electric drive - JX1- , electric drive motor - V141- , air conditioner compressor - V470- and high-voltage wiring.*
- *Before working on the vehicle underbody, visually inspect the high-voltage wiring and covers.*
- *Before working on the rear section of the vehicle, visually inspect the high-voltage wiring and the hybrid battery unit with the maintenance connector for high-voltage system - TW - .*
- *Visually inspect all potential equalisation lines.*

Check the following when making the visual inspection:

- *There must be no external damage on any component.*
- *The insulation of the high-voltage wiring and potential equalisation lines must not be damaged.*
- *There must be no unusual deformation of the high-voltage wiring.*
- *All high-voltage components must be identified by a red warning sticker.*

DANGER!

High voltage can cause fatal injury.

Danger of severe or fatal injuries from electric shock.

- *The high-voltage system may only be re-energised by a suitably qualified person (Audi high-voltage technician).*
- *The system may only be re-energised using the vehicle diagnostic tester via "Guided Fault Finding".*
- *The vehicle is then made ready for operation again by the qualified person (Audi high-voltage technician).*
- *The qualified person (Audi high-voltage technician) marks the vehicle by attaching the appropriate warning signs.*

DANGER!

High voltage can cause fatal injury.

Danger of severe or fatal injuries from electric shock.

- *The high-voltage system may only be de-energised by a suitably qualified person (Audi high-voltage technician).*
- *It must be definitely confirmed that the high-voltage system is de-energised. The system may only be de-energised using the vehicle diagnostic tester via "Guided Fault Finding".*
- *The qualified person (Audi high-voltage technician) confirms that the system is de-energised and ensures that it cannot be re-energised by fitting the locking cap - T40262- and by storing the ignition key and the maintenance connector for high-voltage system - TW - in a safe place.*
- *The qualified person (Audi high-voltage technician) marks the vehicle by attaching the appropriate warning signs.*

Note

Please refer to the Electronic parts catalogue when ordering replacement parts.

WARNING

Accidents can be caused if the driver is distracted by test equipment while road-testing, or if test equipment is not properly secured.

Injuries can be caused if the passenger's airbag is triggered in a collision.

- *The use of test equipment while driving causes distraction.*
- *There is an increased risk of injury if test equipment is not secured.*
- *Move the front passenger's seat back as far as it will go.*
- *Use only the vehicle diagnostic and service information system - VAS 5052- or the diagnostic system - VAS 5053- .*
- *The test equipment -1- must rest flat on the passenger's thighs (as shown in illustration) and must be operated by the passenger.*

4.2 Tools

Special tools and workshop equipment required

- Compact angle grinder - VAS 5167-
- Drill - VAS 5144-
- Compact booster - VAS 6790-

- Pneumatic glue gun - V.A.G 2005 B-

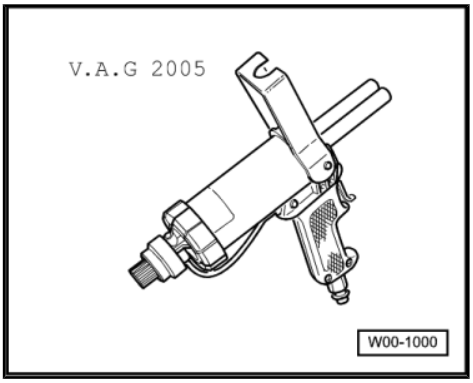

- Shielded arc welding equipment - VAS 6388-
- Pneumatic jig-saw - VAS 5108 - or body saw - VAS 6598 - or -VAS 6780-

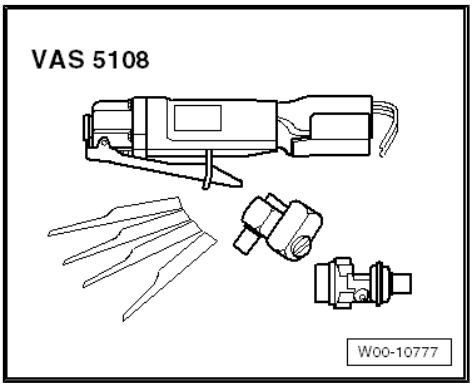

- Rechargeable riveter - VAS 5279 A-
- Alternatively, you can use the rechargeable riveter - VAS 5279 B- . This is a complete set.

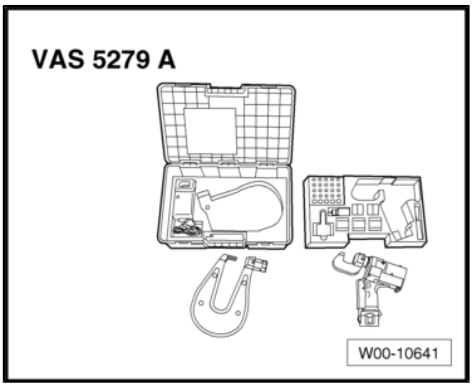

4.3 Procedure

Cutting locations

- Rear cross panel removed ⇒ page 250

– Make separating cuts using body saw .

– Separate original joint using rechargeable riveter - VAS 5279 A- or compact booster - VAS 6790- . For attachments see ⇒ page 15 .

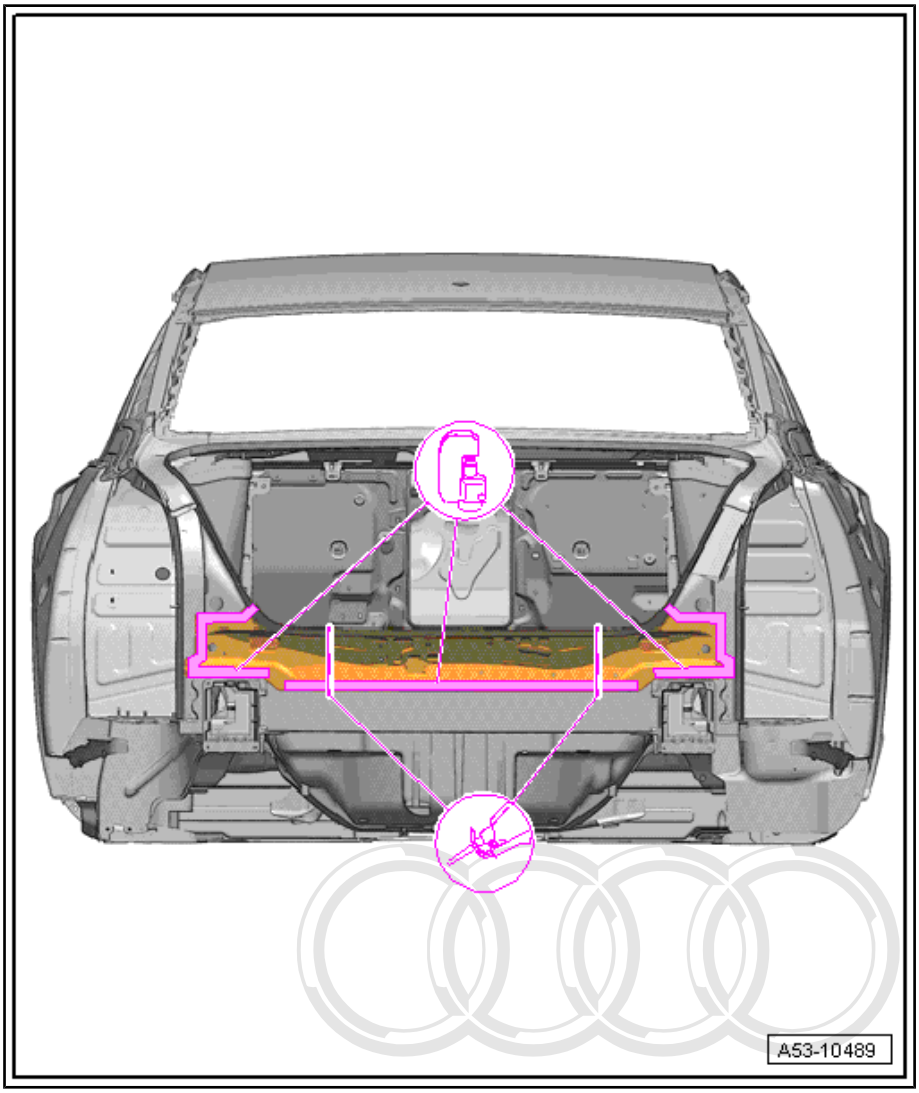

– Remove remaining material using compact angle grinder .

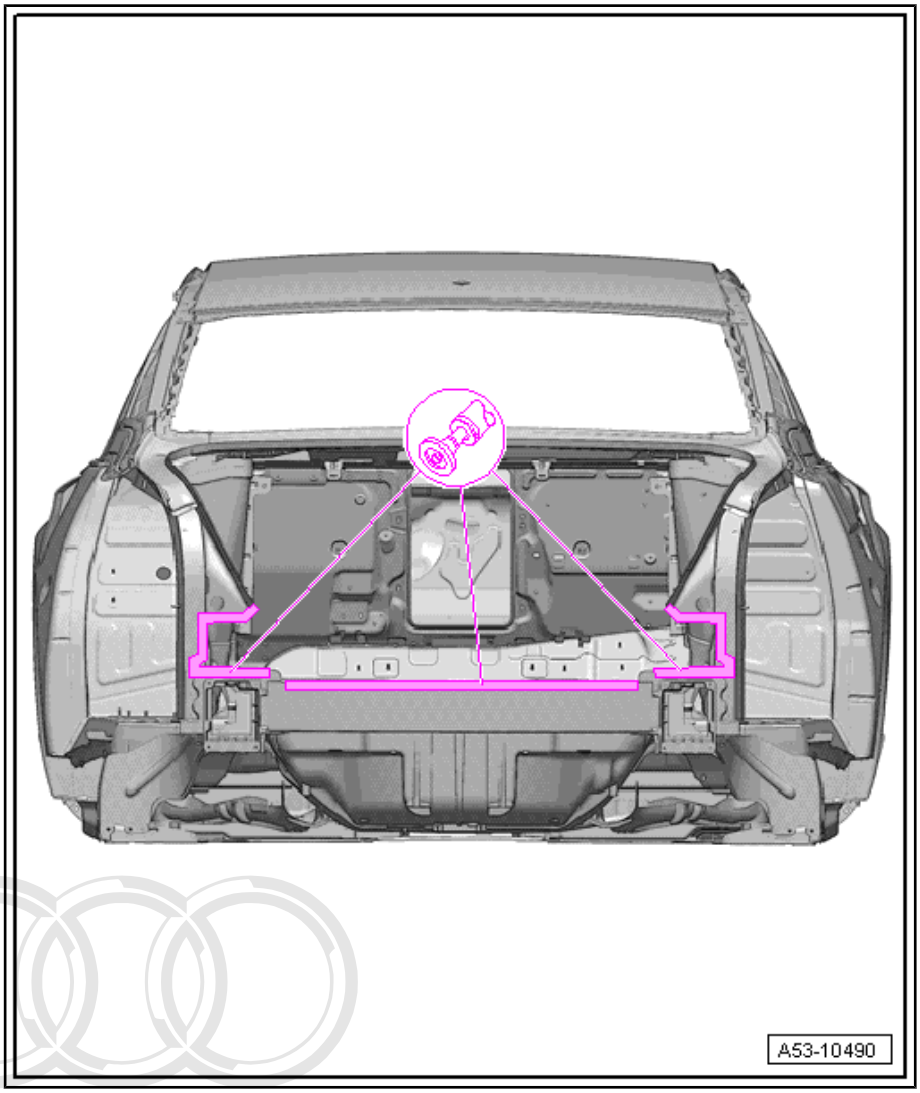

Replacement parts

- Rear inner cross panel
- Punch rivets (self-piercing rivets)

Note

Refer to General information on bonding.

Preparing joints for adhesive application

– Prepare flanges on body and new parts for bonding and welding.

– Clean new part with cleaning solution - D 009 401 04- .

– Prepare bonding area with silicate stone - DA 009 800 - and clean.

– Apply aluminium primer - DA 009 801 - to bonding surfaces using applicator - D 009 500 25 - .

Preparing new part

– Apply 2-component epoxy adhesive - DA 001 730 A2- to entire riveting area using pneumatic glue gun - V.A.G 2005 B- .

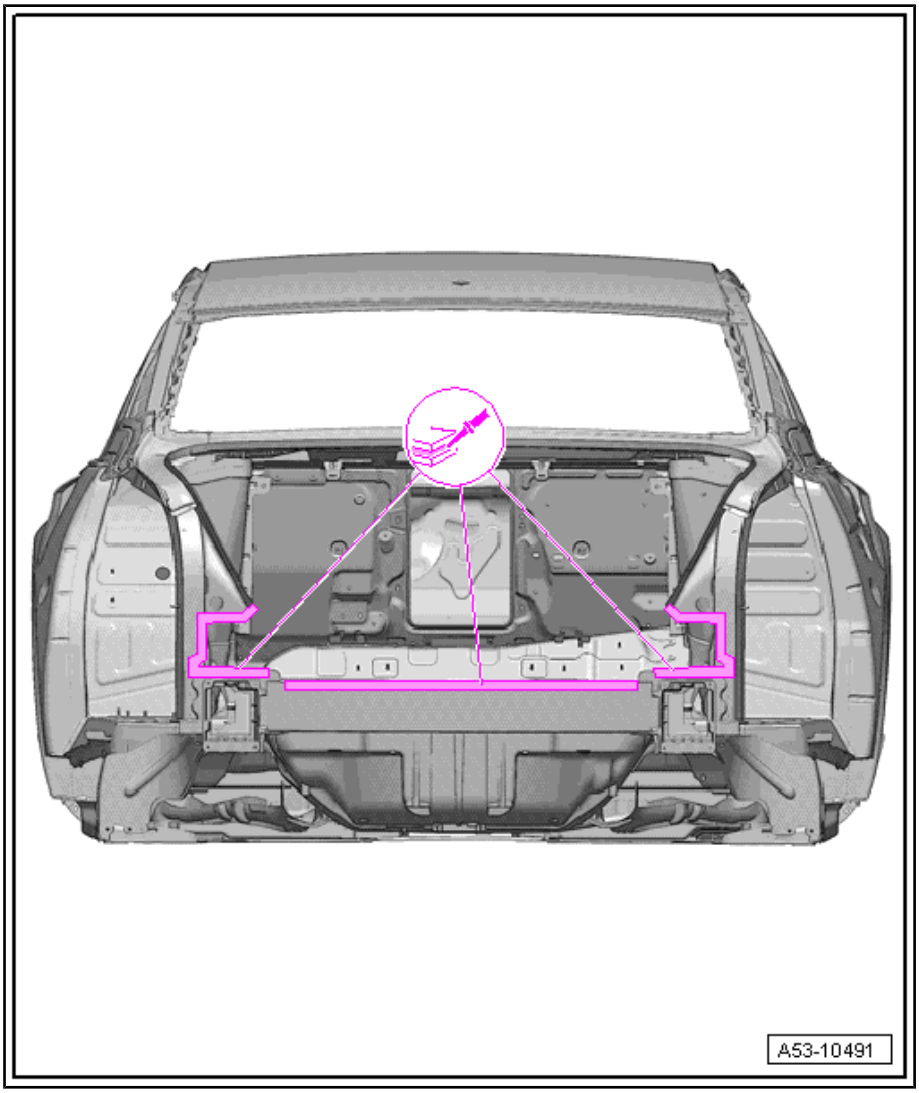

– Match up new part to body.

Riveting in

– Rivet in cross panel using rechargeable riveter - VAS 5279 A- or compact booster - VAS 6790 - . For attachments see ⇒ page 15 .

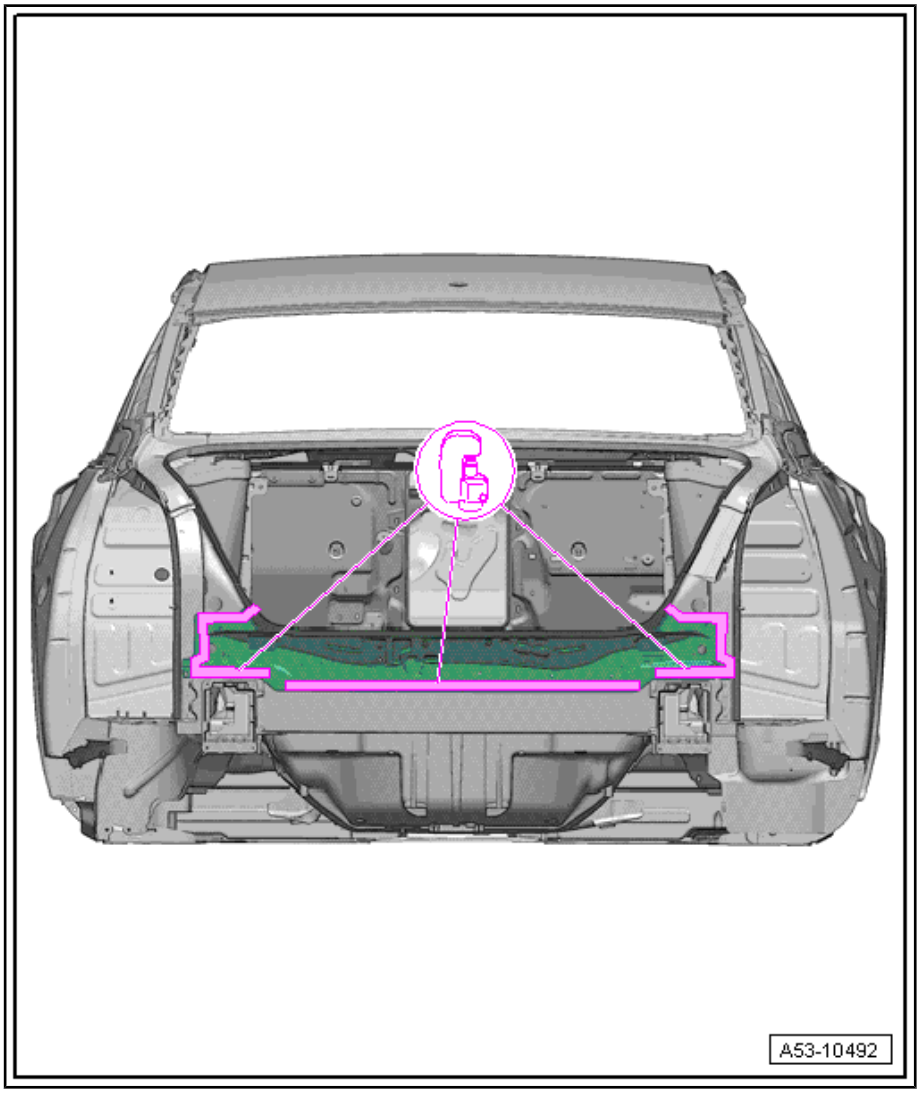

Welding in

– Weld in rear inner cross panel using shielded arc welding equipment : SG continuous seam.

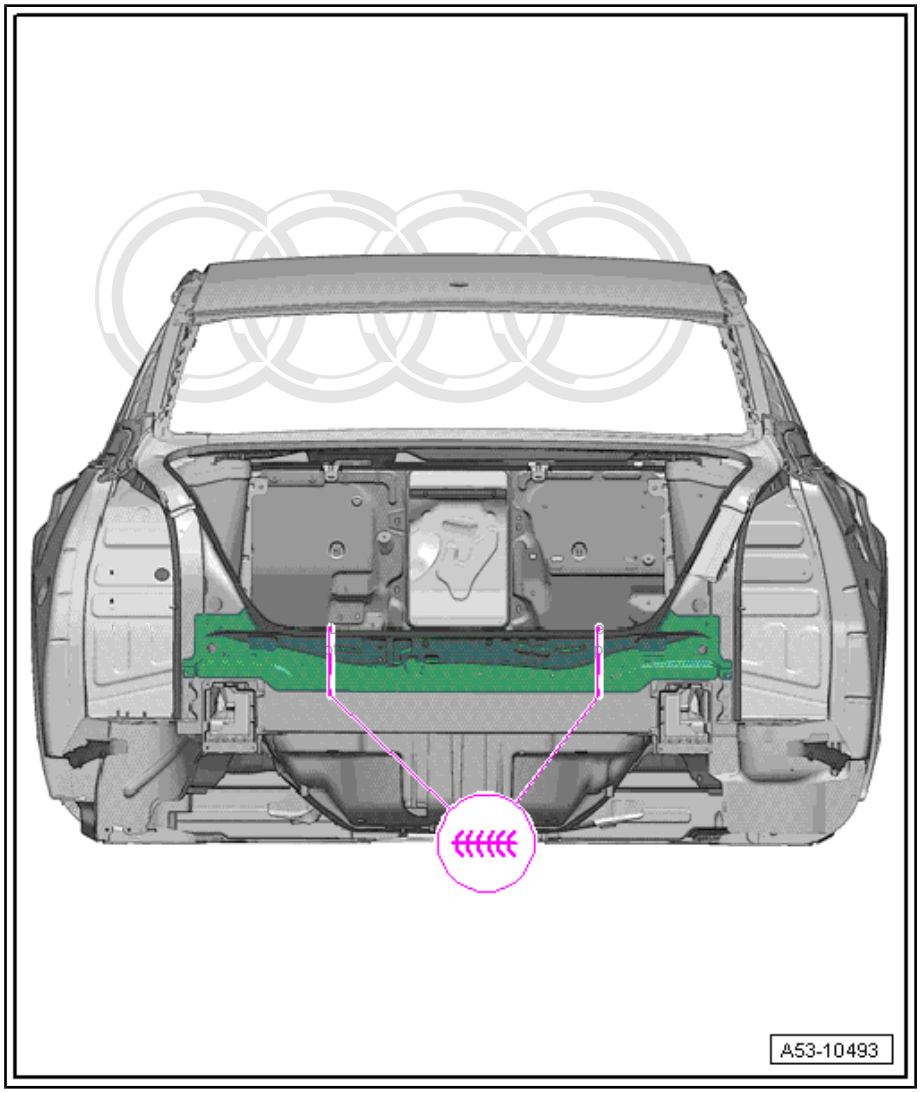

- Install rear cross panel ⇒ page 250 .

RO: 53 16 55 00

5 Rear cross member - Renewal

1 - Rear cross member

2 - Rear longitudinal member

3 - Tail light mounting

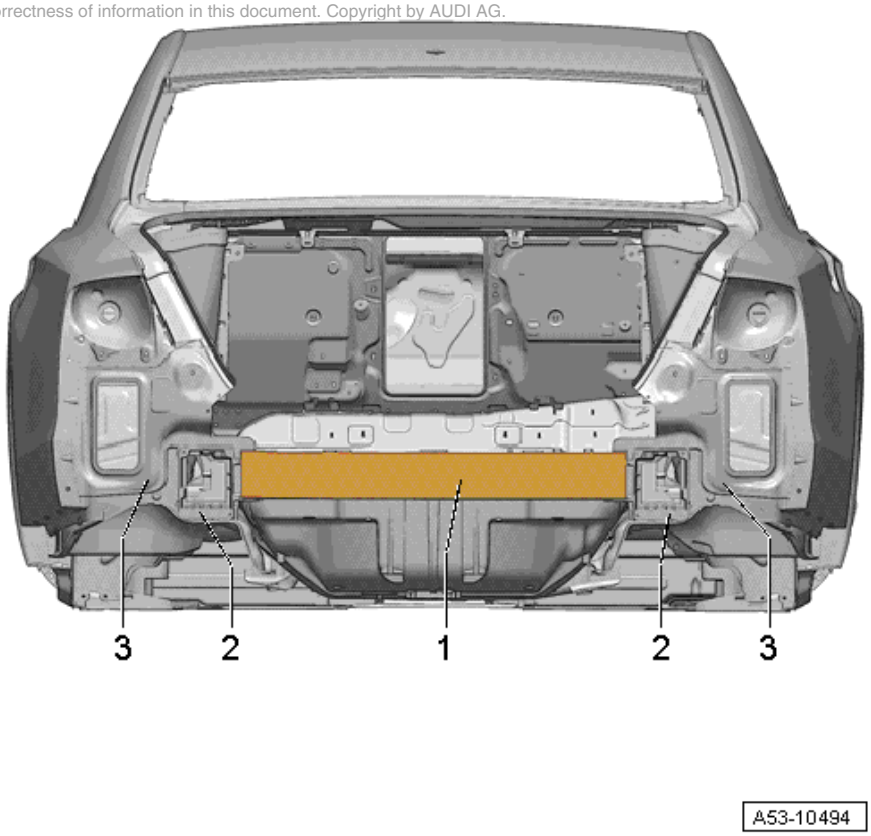

5.1 Notes for vehicles with hybrid drive

WARNING

Safety hazard: the engine can start unexpectedly.

Before carrying out general work on a vehicle with high-voltage electrical system, switch off the ignition and remove the ignition key from the vehicle.

DANGER!

When working on a vehicle with the ignition switched on or while the drive system is active, the engine can start unexpectedly and exhaust fumes can cause a health hazard in closed rooms. Moving parts can trap or draw in parts of the body and/or clothing (safety hazard).

Before switching on the ignition, perform the following steps:

- *Move selector lever to position P*
- *Activate parking brake*
- *Switch off ignition*
- *Open bonnet*
- *Connect battery charger (e.g. - VAS 5095A-) to jump-start connections of 12 V electrical system.*
- *Switch on ignition*

WARNING

Working on vehicles with high-voltage wiring:

- *Do not support yourself or tools on high-voltage wiring or associated components --> this can damage the insulation.*
- *High-voltage wiring must not be excessively bent or kinked --> this can damage the insulation.*
- *The round high-voltage connectors are colour-coded with an external coloured ring and are provided with mechanical coding or guide lugs. It is important to observe this coding when joining up the round high-voltage connectors; otherwise the connectors can be damaged.*

DANGER!

Risk of fatal injury if high-voltage components are damaged.

Observe the following when working in the vicinity of high-voltage components or wiring:

- *It is not permitted to use cutting or forming tools, other sharp-edged tools or heat sources such as welding, brazing, soldering, hot air or thermal bonding equipment.*
- *Before starting work, visually inspect the high-voltage components in the areas involved.*
- *Before working in the engine compartment, visually inspect the power and control electronics for electric drive - JX1- , electric drive motor - V141- , air conditioner compressor - V470- and high-voltage wiring.*
- *Before working on the vehicle underbody, visually inspect the high-voltage wiring and covers.*
- *Before working on the rear section of the vehicle, visually inspect the high-voltage wiring and the hybrid battery unit with the maintenance connector for high-voltage system - TW - .*
- *Visually inspect all potential equalisation lines.*

Check the following when making the visual inspection:

- *There must be no external damage on any component.*
- *The insulation of the high-voltage wiring and potential equalisation lines must not be damaged.*
- *There must be no unusual deformation of the high-voltage wiring.*
- *All high-voltage components must be identified by a red warning sticker.*

DANGER!

High voltage can cause fatal injury.

Danger of severe or fatal injuries from electric shock.

- *The high-voltage system may only be re-energised by a suitably qualified person (Audi high-voltage technician).*
- *The system may only be re-energised using the vehicle diagnostic tester via "Guided Fault Finding".*
- *The vehicle is then made ready for operation again by the qualified person (Audi high-voltage technician).*
- *The qualified person (Audi high-voltage technician) marks the vehicle by attaching the appropriate warning signs.*

DANGER!

High voltage can cause fatal injury.

Danger of severe or fatal injuries from electric shock.

- *The high-voltage system may only be de-energised by a suitably qualified person (Audi high-voltage technician).*
- *It must be definitely confirmed that the high-voltage system is de-energised. The system may only be de-energised using the vehicle diagnostic tester via "Guided Fault Finding".*
- *The qualified person (Audi high-voltage technician) confirms that the system is de-energised and ensures that it cannot be re-energised by fitting the locking cap - T40262- and by storing the ignition key and the maintenance connector for high-voltage system - TW - in a safe place.*
- *The qualified person (Audi high-voltage technician) marks the vehicle by attaching the appropriate warning signs.*

Note

Please refer to the Electronic parts catalogue when ordering replacement parts.

WARNING

Accidents can be caused if the driver is distracted by test equipment while road-testing, or if test equipment is not properly secured.

Injuries can be caused if the passenger's airbag is triggered in a collision.

- *The use of test equipment while driving causes distraction.*
- *There is an increased risk of injury if test equipment is not secured.*
- *Move the front passenger's seat back as far as it will go.*
- *Use only the vehicle diagnostic and service information system - VAS 5052- or the diagnostic system - VAS 5053- .*
- *The test equipment -1- must rest flat on the passenger's thighs (as shown in illustration) and must be operated by the passenger.*

5.2 Tools

Special tools and workshop equipment required

- Compact angle grinder - VAS 5167-
- Shielded arc welding equipment - VAS 6388-

5.3 Procedure

Cutting locations

- Cross panel cut out ⇒ page 250
- Inner cross panel cut out ⇒ page 259

– Cut out rear cross member using compact angle grinder .

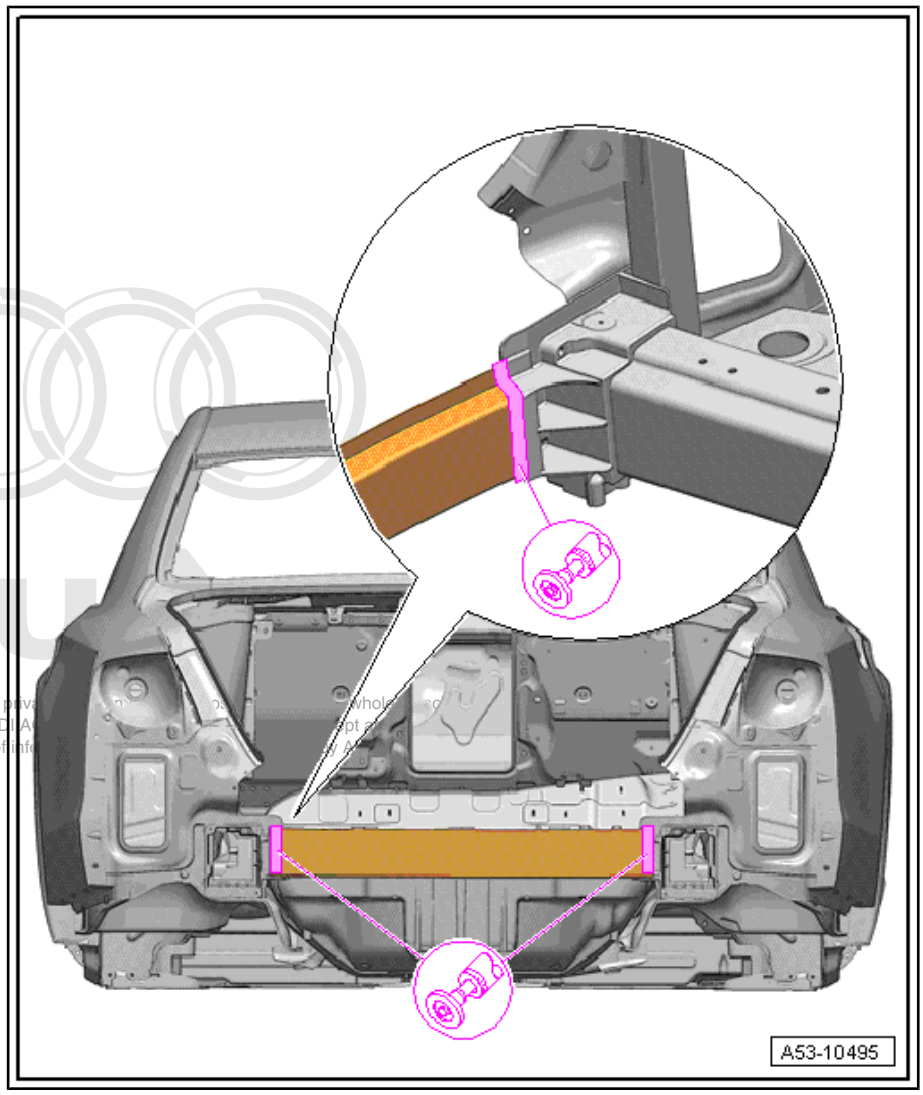

– Remove remaining material using compact angle grinder .

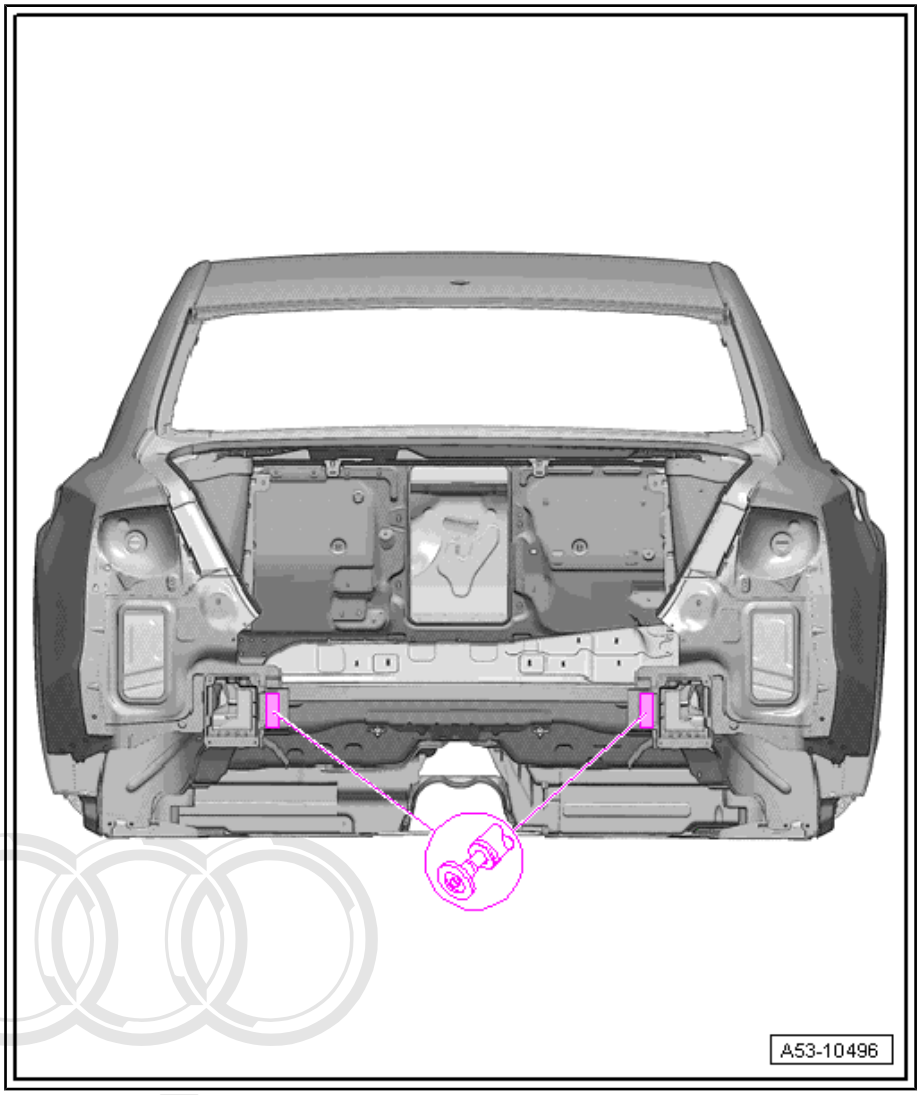

Replacement part

- Rear cross member

Welding in

– Weld in rear cross member using shielded arc welding equipment : SG continuous seam.

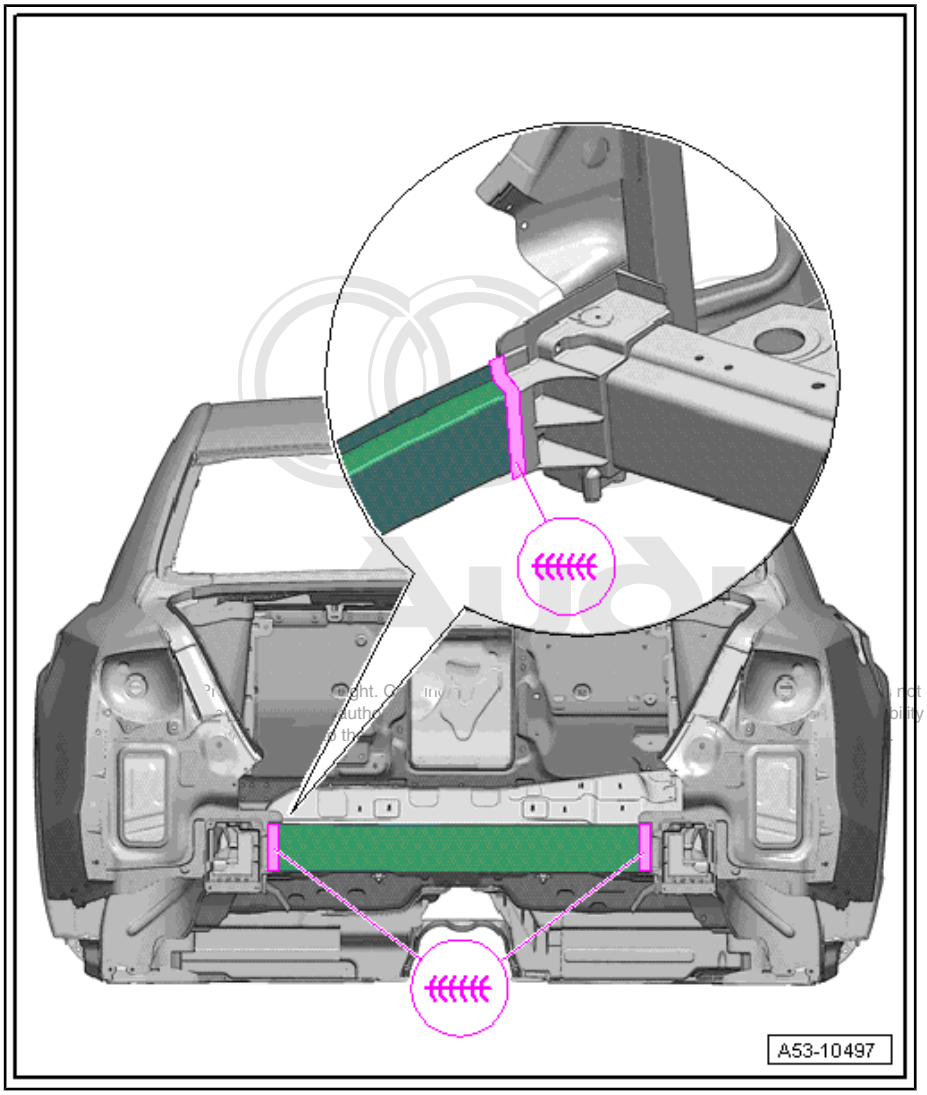

- Install cross panel ⇒ page 250 .
- Install inner cross panel ⇒ page 259 .

RO: 53 48 55 62

6 Rear longitudinal member - Partial renewal

1 - Longitudinal member part section

2 - Wheel housing

3 - Longitudinal member

4 - Spare wheel well reinforcement

5 - Tail light mounting

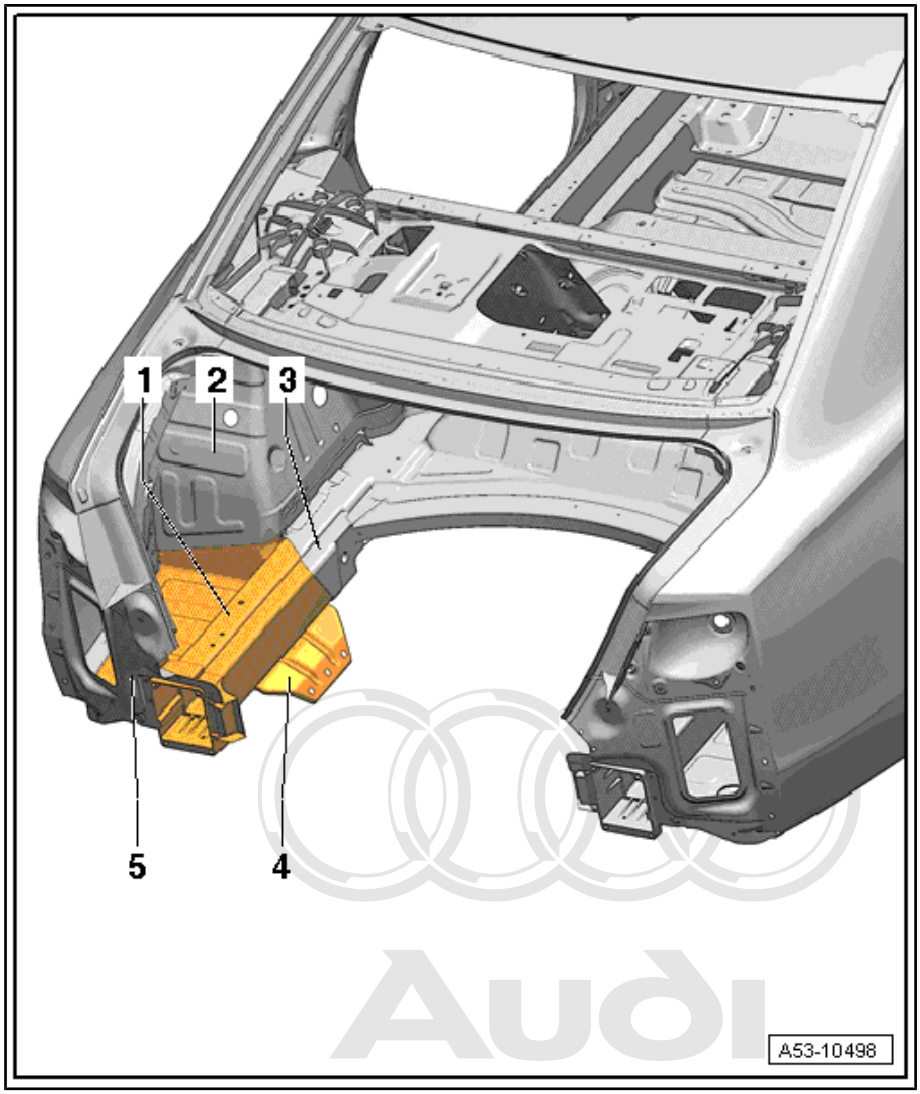

6.1 Notes for vehicles with hybrid drive

WARNING

Safety hazard: the engine can start unexpectedly.

Before carrying out general work on a vehicle with high-voltage electrical system, switch off the ignition and remove the ignition key from the vehicle.

DANGER!

When working on a vehicle with the ignition switched on or while the drive system is active, the engine can start unexpectedly and exhaust fumes can cause a health hazard in closed rooms. Moving parts can trap or draw in parts of the body and/or clothing (safety hazard).

Before switching on the ignition, perform the following steps:

- *Move selector lever to position P*
- *Activate parking brake*
- *Switch off ignition*
- *Open bonnet*
- *Connect battery charger (e.g. - VAS 5095A-) to jump-start connections of 12 V electrical system.*
- *Switch on ignition*

WARNING

Working on vehicles with high-voltage wiring:

- *Do not support yourself or tools on high-voltage wiring or associated components --> this can damage the insulation.*
- *High-voltage wiring must not be excessively bent or kinked --> this can damage the insulation.*
- *The round high-voltage connectors are colour-coded with an external coloured ring and are provided with mechanical coding or guide lugs. It is important to observe this coding when joining up the round high-voltage connectors; otherwise the connectors can be damaged.*

DANGER!

Risk of fatal injury if high-voltage components are damaged.

Observe the following when working in the vicinity of high-voltage components or wiring:

- *It is not permitted to use cutting or forming tools, other sharp-edged tools or heat sources such as welding, brazing, soldering, hot air or thermal bonding equipment.*
- *Before starting work, visually inspect the high-voltage components in the areas involved.*
- *Before working in the engine compartment, visually inspect the power and control electronics for electric drive - JX1- , electric drive motor - V141- , air conditioner compressor - V470- and high-voltage wiring.*
- *Before working on the vehicle underbody, visually inspect the high-voltage wiring and covers.*
- *Before working on the rear section of the vehicle, visually inspect the high-voltage wiring and the hybrid battery unit with the maintenance connector for high-voltage system - TW - .*
- *Visually inspect all potential equalisation lines.*

Check the following when making the visual inspection:

- *There must be no external damage on any component.*
- *The insulation of the high-voltage wiring and potential equalisation lines must not be damaged.*
- *There must be no unusual deformation of the high-voltage wiring.*
- *All high-voltage components must be identified by a red warning sticker.*

DANGER!

High voltage can cause fatal injury.

Danger of severe or fatal injuries from electric shock.

- *The high-voltage system may only be re-energised by a suitably qualified person (Audi high-voltage technician).*
- *The system may only be re-energised using the vehicle diagnostic tester via "Guided Fault Finding".*
- *The vehicle is then made ready for operation again by the qualified person (Audi high-voltage technician).*
- *The qualified person (Audi high-voltage technician) marks the vehicle by attaching the appropriate warning signs.*

DANGER!

High voltage can cause fatal injury.

Danger of severe or fatal injuries from electric shock.

- *The high-voltage system may only be de-energised by a suitably qualified person (Audi high-voltage technician).*
- *It must be definitely confirmed that the high-voltage system is de-energised. The system may only be de-energised using the vehicle diagnostic tester via "Guided Fault Finding".*
- *The qualified person (Audi high-voltage technician) confirms that the system is de-energised and ensures that it cannot be re-energised by fitting the locking cap - T40262- and by storing the ignition key and the maintenance connector for high-voltage system - TW - in a safe place.*
- *The qualified person (Audi high-voltage technician) marks the vehicle by attaching the appropriate warning signs.*

Note

Please refer to the Electronic parts catalogue when ordering replacement parts.

WARNING

Accidents can be caused if the driver is distracted by test equipment while road-testing, or if test equipment is not properly secured.

Injuries can be caused if the passenger's airbag is triggered in a collision.

- *The use of test equipment while driving causes distraction.*
- *There is an increased risk of injury if test equipment is not secured.*
- *Move the front passenger's seat back as far as it will go.*
- *Use only the vehicle diagnostic and service information system - VAS 5052- or the diagnostic system - VAS 5053- .*
- *The test equipment -1- must rest flat on the passenger's thighs (as shown in illustration) and must be operated by the passenger.*

6.2 Tools

Special tools and workshop equipment required

- Drill - VAS 6267-
- Compact angle grinder - VAS 5167-
- Socket for flow-drill screws - VAS 6426 -

- Pneumatic jig-saw - VAS 5108 - or body saw - VAS 6598 - or -VAS 6780-

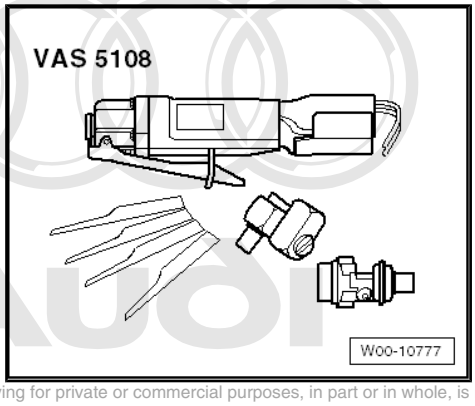

- Shielded arc welding equipment - VAS 6388-

6.3 Procedure

Note

- *The Audi A8 employs flow-drill screws which can be renewed using socket for flow-drill screws - VAS 6426- or -6426/1- and 6426/2 .*
- *Repairing joints with flow-drill screws* ⇒ page 4

Cutting locations

- Spare wheel well cut out ⇒ page 324
- Upper cross panel cut out ⇒ page 259
- Cross panel removed ⇒ page 250
- Rear cross member removed ⇒ page 269

WARNING

Take care not to damage aluminium node castings.

– Separate original joint using compact angle grinder .

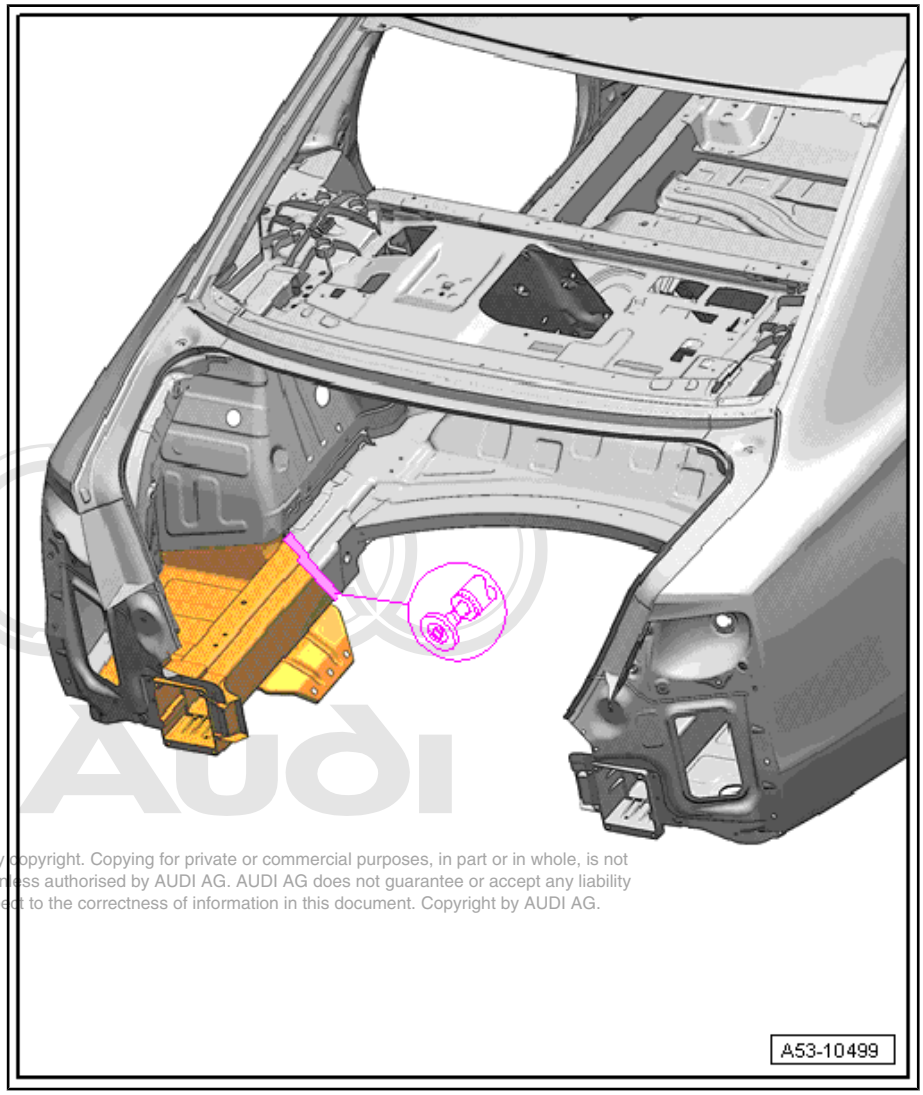

- Detach spare wheel well reinforcement -a- using socket for flow-drill screws - VAS 6426 - .
- Separate original joint using compact angle grinder .
- Make separating cut as shown using body saw .

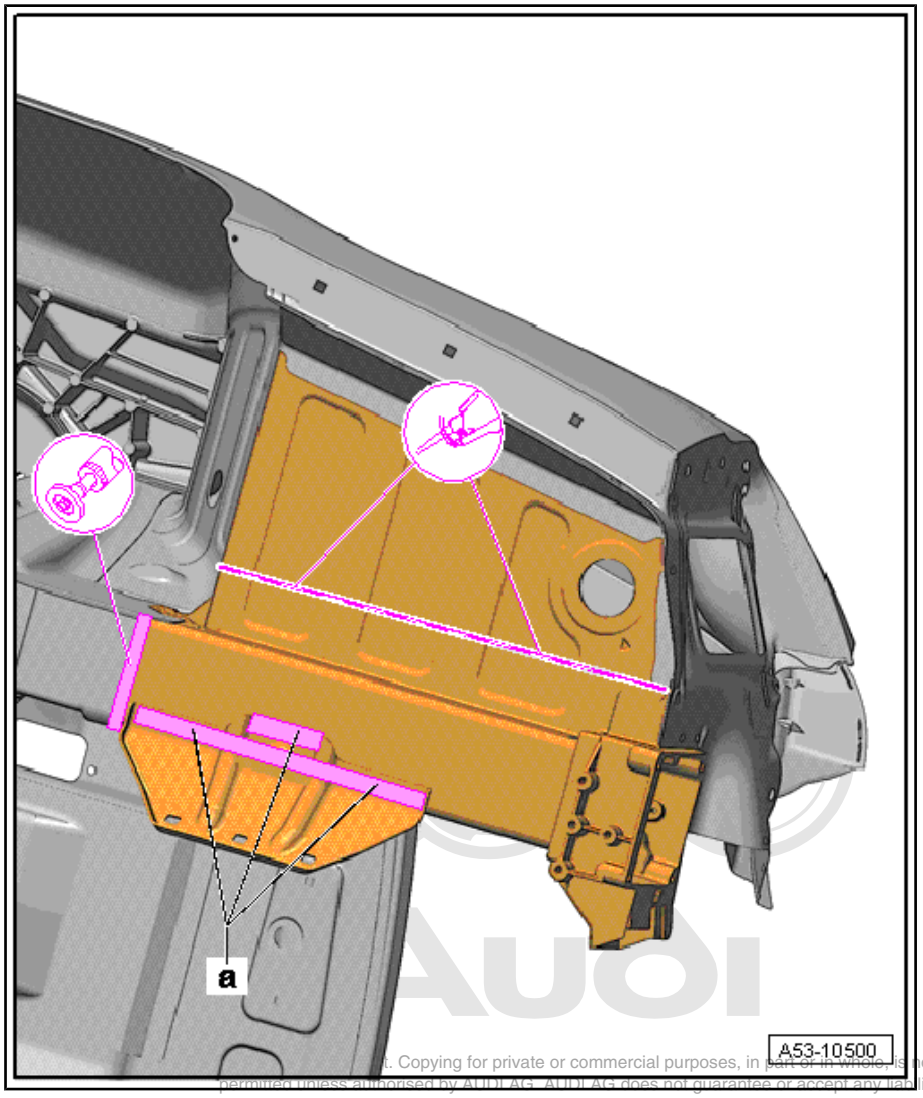

- Longitudinal member part section
- Floor plate, side section
- Spare wheel well reinforcement

Preparing new part

Note

When marking the separating cut, include a material allowance of 20 mm for overlap.

– Transfer separating cut to new part and cut off hatched area using body saw .

– Drill holes (4.0 mm ∅) in longitudinal member for flow-drill screws using drill .

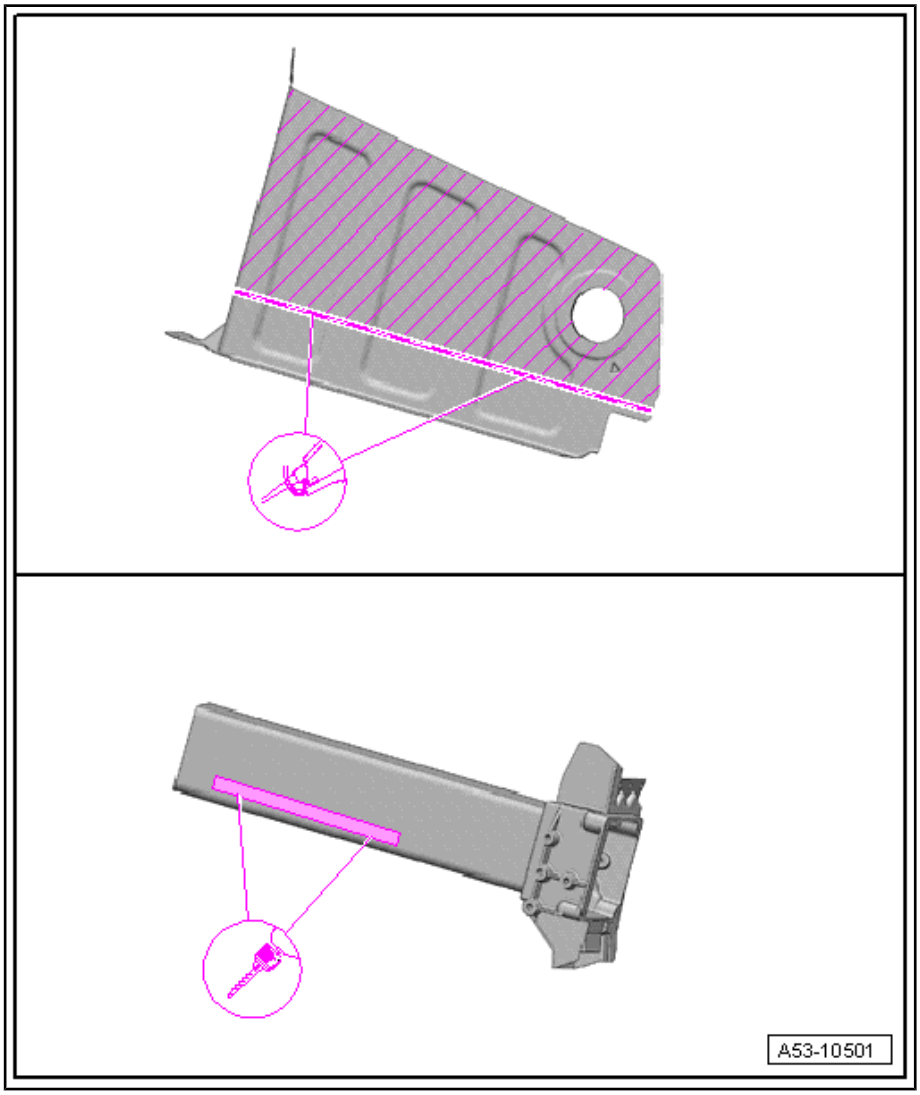

– Prepare body side of joint on side section of floor panel for joddle-joining.

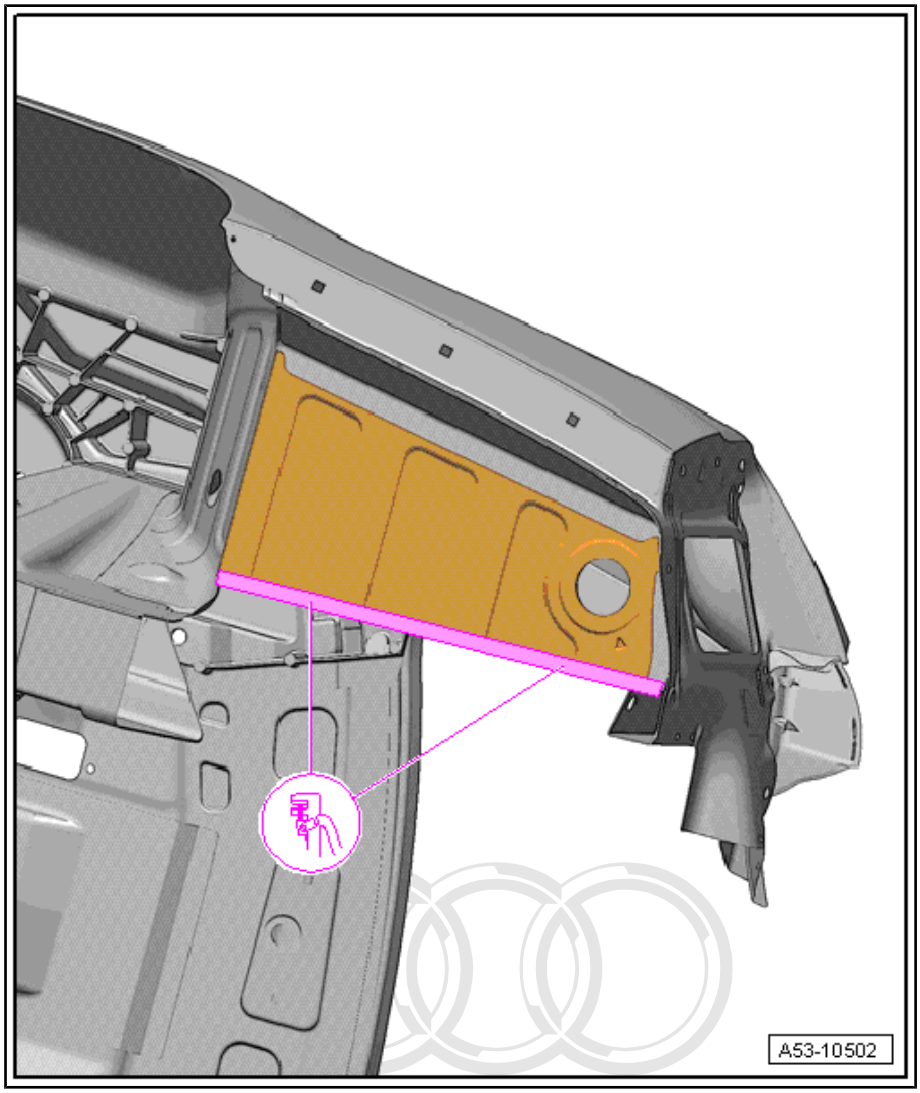

– Match up new part to body.

– Fix new parts in position on alignment bracket.

Welding in

– Weld in longitudinal member using shielded arc welding equipment : SG continuous seam.

– Weld in at separating cut on side section of floor panel using shielded arc welding equipment : SG continuous seam.

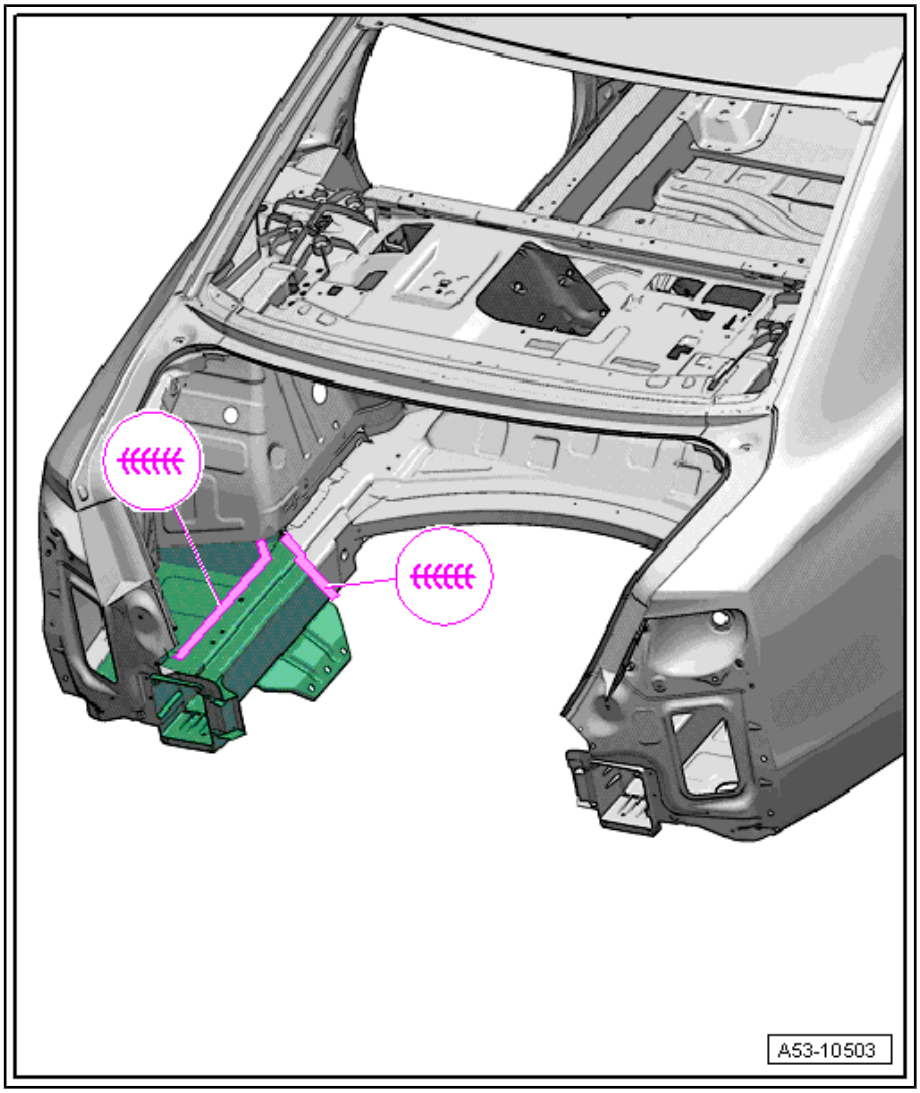

- Install spare wheel well ⇒ page 324 .
- Install inner cross panel ⇒ page 259 .
- Install cross panel ⇒ page 250 .
- Install rear cross member ⇒ page 269 .

RO: 53 48 55 00

7 Rear longitudinal member - Renewal

1 - Rear longitudinal member

2 - Inner wheel housing

3 - Cross member for fuel tank mounting

4 - Rear floor panel

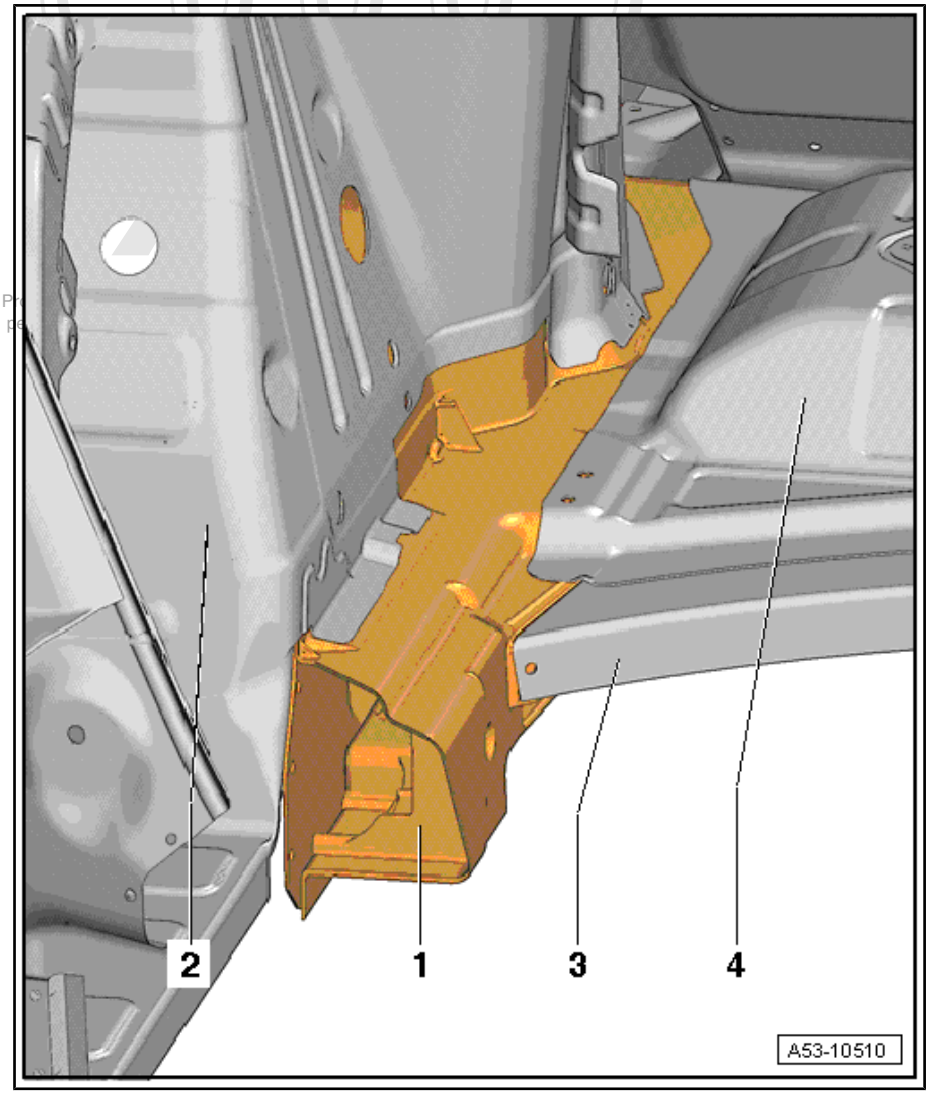

7.1 Notes for vehicles with hybrid drive

WARNING

Safety hazard: the engine can start unexpectedly.

Before carrying out general work on a vehicle with high-voltage electrical system, switch off the ignition and remove the ignition key from the vehicle.

DANGER!

When working on a vehicle with the ignition switched on or while the drive system is active, the engine can start unexpectedly and exhaust fumes can cause a health hazard in closed rooms. Moving parts can trap or draw in parts of the body and/or clothing (safety hazard).

Before switching on the ignition, perform the following steps:

- *Move selector lever to position P*
- *Activate parking brake*
- *Switch off ignition*
- *Open bonnet*
- *Connect battery charger (e.g. - VAS 5095A-) to jump-start connections of 12 V electrical system.*
- *Switch on ignition*

WARNING

Working on vehicles with high-voltage wiring:

- *Do not support yourself or tools on high-voltage wiring or associated components --> this can damage the insulation.*
- *High-voltage wiring must not be excessively bent or kinked --> this can damage the insulation.*
- *The round high-voltage connectors are colour-coded with an external coloured ring and are provided with mechanical coding or guide lugs. It is important to observe this coding when joining up the round high-voltage connectors; otherwise the connectors can be damaged.*

DANGER!

Risk of fatal injury if high-voltage components are damaged.

Observe the following when working in the vicinity of high-voltage components or wiring:

- *It is not permitted to use cutting or forming tools, other sharp-edged tools or heat sources such as welding, brazing, soldering, hot air or thermal bonding equipment.*
- *Before starting work, visually inspect the high-voltage components in the areas involved.*
- *Before working in the engine compartment, visually inspect the power and control electronics for electric drive - JX1- , electric drive motor - V141- , air conditioner compressor - V470- and high-voltage wiring.*
- *Before working on the vehicle underbody, visually inspect the high-voltage wiring and covers.*
- *Before working on the rear section of the vehicle, visually inspect the high-voltage wiring and the hybrid battery unit with the maintenance connector for high-voltage system - TW - .*
- *Visually inspect all potential equalisation lines.*

Check the following when making the visual inspection:

- *There must be no external damage on any component.*
- *The insulation of the high-voltage wiring and potential equalisation lines must not be damaged.*
- *There must be no unusual deformation of the high-voltage wiring.*
- *All high-voltage components must be identified by a red warning sticker.*

DANGER!

High voltage can cause fatal injury.

Danger of severe or fatal injuries from electric shock.

- *The high-voltage system may only be re-energised by a suitably qualified person (Audi high-voltage technician).*
- *The system may only be re-energised using the vehicle diagnostic tester via "Guided Fault Finding".*
- *The vehicle is then made ready for operation again by the qualified person (Audi high-voltage technician).*
- *The qualified person (Audi high-voltage technician) marks the vehicle by attaching the appropriate warning signs.*

DANGER!

High voltage can cause fatal injury.

Danger of severe or fatal injuries from electric shock.

- *The high-voltage system may only be de-energised by a suitably qualified person (Audi high-voltage technician).*
- *It must be definitely confirmed that the high-voltage system is de-energised. The system may only be de-energised using the vehicle diagnostic tester via "Guided Fault Finding".*
- *The qualified person (Audi high-voltage technician) confirms that the system is de-energised and ensures that it cannot be re-energised by fitting the locking cap - T40262- and by storing the ignition key and the maintenance connector for high-voltage system - TW - in a safe place.*
- *The qualified person (Audi high-voltage technician) marks the vehicle by attaching the appropriate warning signs.*

Note

Please refer to the Electronic parts catalogue when ordering replacement parts.

WARNING

Accidents can be caused if the driver is distracted by test equipment while road-testing, or if test equipment is not properly secured.

Injuries can be caused if the passenger's airbag is triggered in a collision.

- *The use of test equipment while driving causes distraction.*
- *There is an increased risk of injury if test equipment is not secured.*
- *Move the front passenger's seat back as far as it will go.*
- *Use only the vehicle diagnostic and service information system - VAS 5052- or the diagnostic system - VAS 5053- .*
- *The test equipment -1- must rest flat on the passenger's thighs (as shown in illustration) and must be operated by the passenger.*

7.2 Tools

Special tools and workshop equipment required

- Drill - VAS 6267-
- Compact angle grinder - VAS 5167-
- Socket for flow-drill screws - VAS 6426 -
- Dent remover for aluminium vehicles - VAS 5196-
- Compact booster - VAS 6790-

- Pop rivet pliers - VAS 5072-

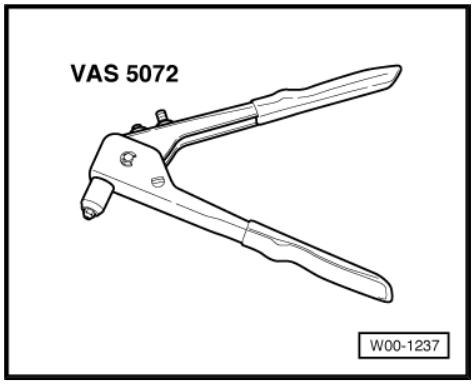

- Rechargeable riveter - VAS 5279 A-
- Alternatively, you can use the rechargeable riveter - VAS 5279 B- . This is a complete set.

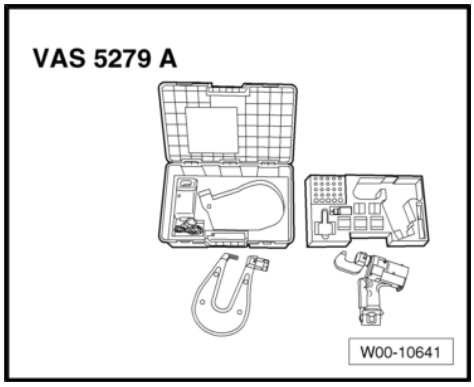

- Pneumatic jig-saw - VAS 5108 - or body saw - VAS 6598 - or -VAS 6780-

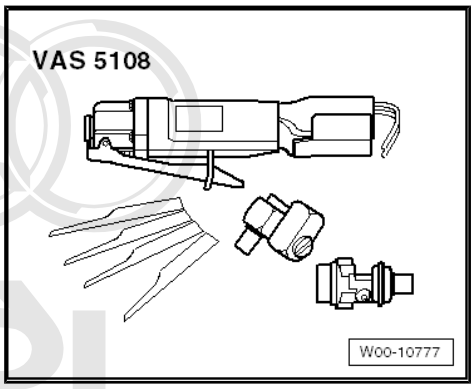

- Shielded arc welding equipment - VAS 6388-

7.3 Procedure

Note

- *The Audi A8 employs flow-drill screws which can be renewed using socket for flow-drill screws - VAS 6426- or -6426/1- and 6426/2 .*
- *Repairing joints with flow-drill screws* ⇒ page 4

Cutting locations

- Spare wheel well cut out ⇒ page 324
- Inner cross panel cut out ⇒ page 259
- Cross panel removed ⇒ page 250
- Rear cross member removed ⇒ page 269

- Side panel removed ⇒ page 300
- Wheel housing removed ⇒ page 315
- Side member removed ⇒ page 214

– Separate original joint using compact angle grinder .

– Remove flow-drill screws using socket for flow-drill screws - VAS 6426 - and separate original joint -a-.

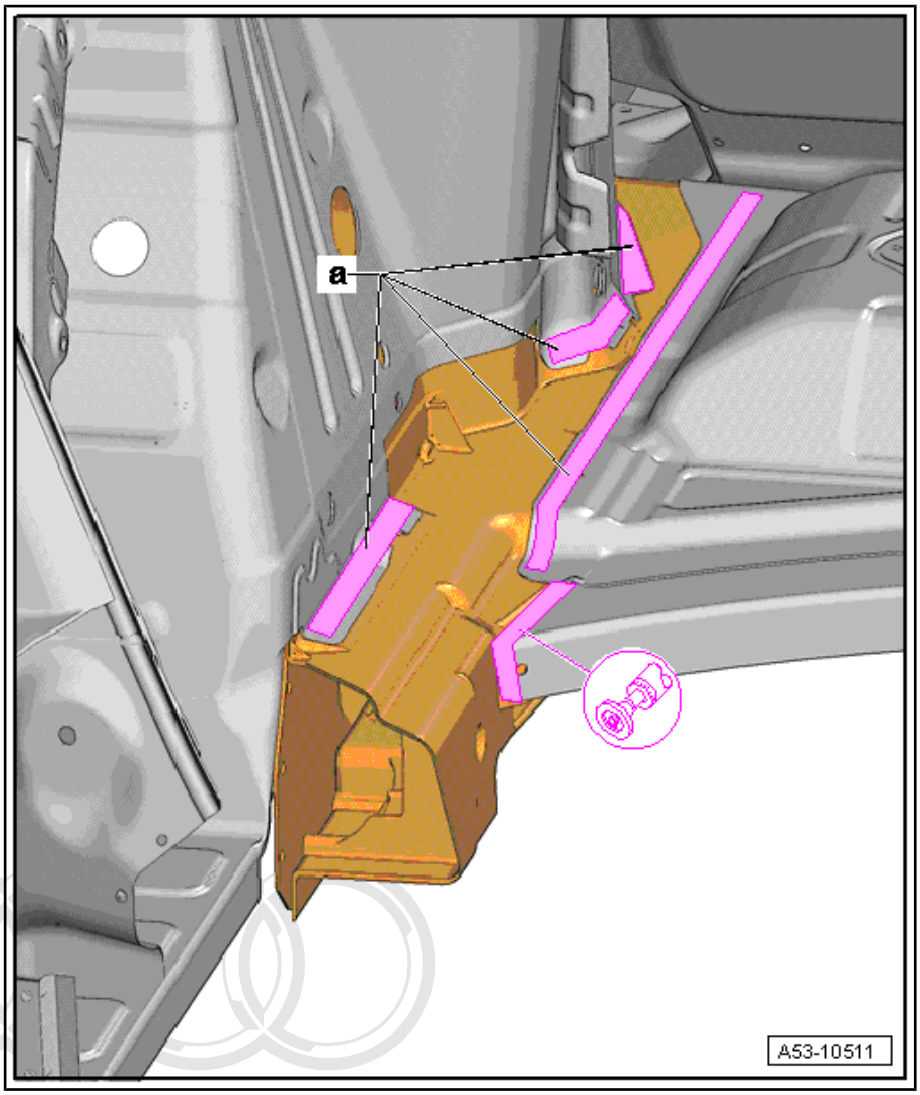

– Separate original joint using compact angle grinder .

– Remove flow-drill screws using socket for flow-drill screws - VAS 6426 - and separate original joint -a-.

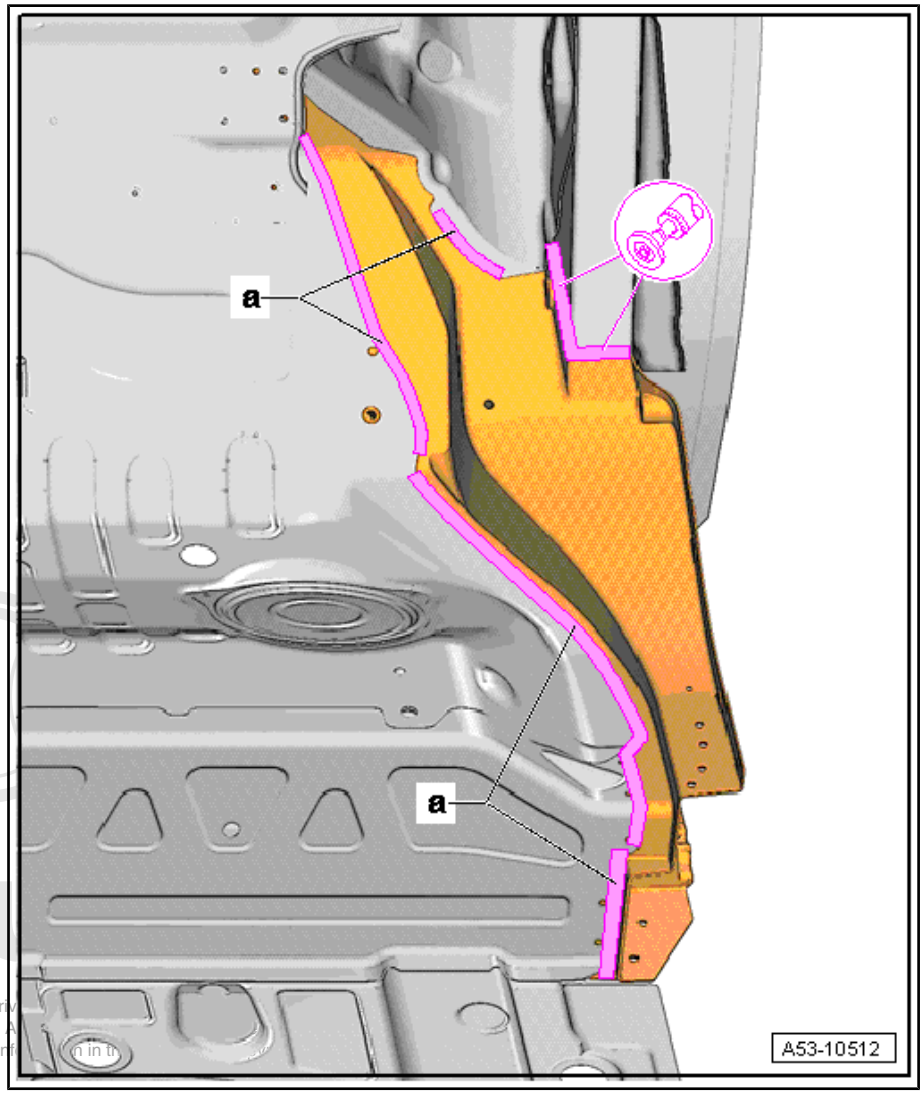

– Release inaccessible rivets -a- using dent remover for aluminium vehicles - VAS 5196- .

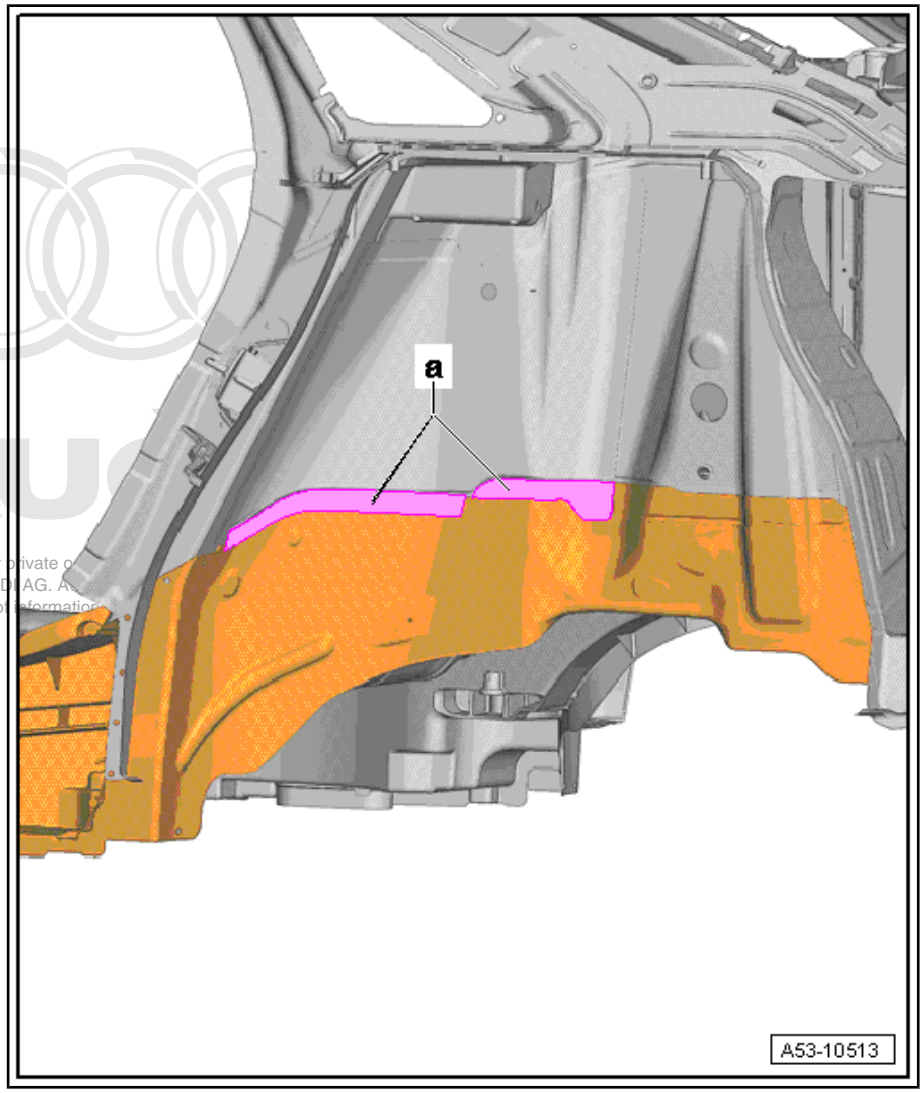

– Make separating cut as shown using body saw .

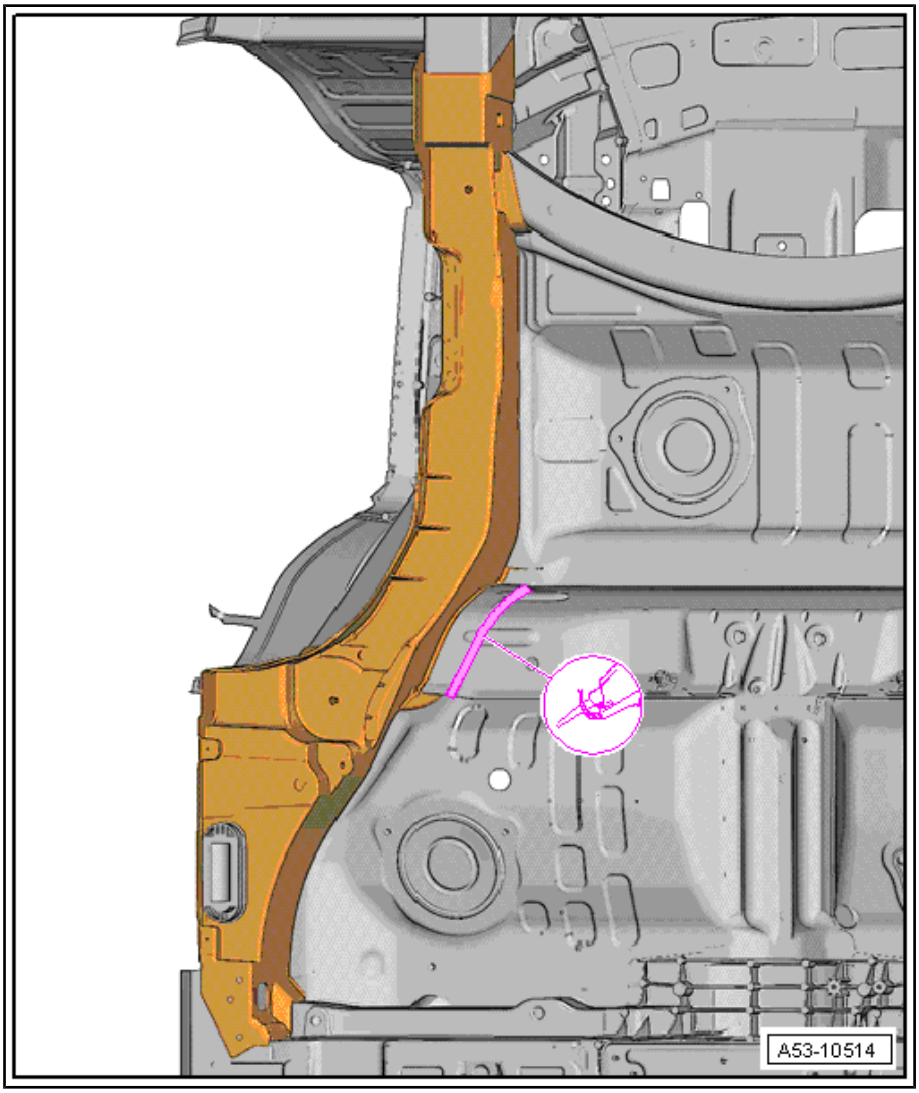

Replacement parts

- Longitudinal member
- Floor plate, side section
- Rear cross member

Preparing new part

– Transfer separating cut to new part and cut off hatched area using body saw .

– Drill holes (4 mm ∅) in longitudinal member for flow-drill screws using drill ⇒ page 4 .

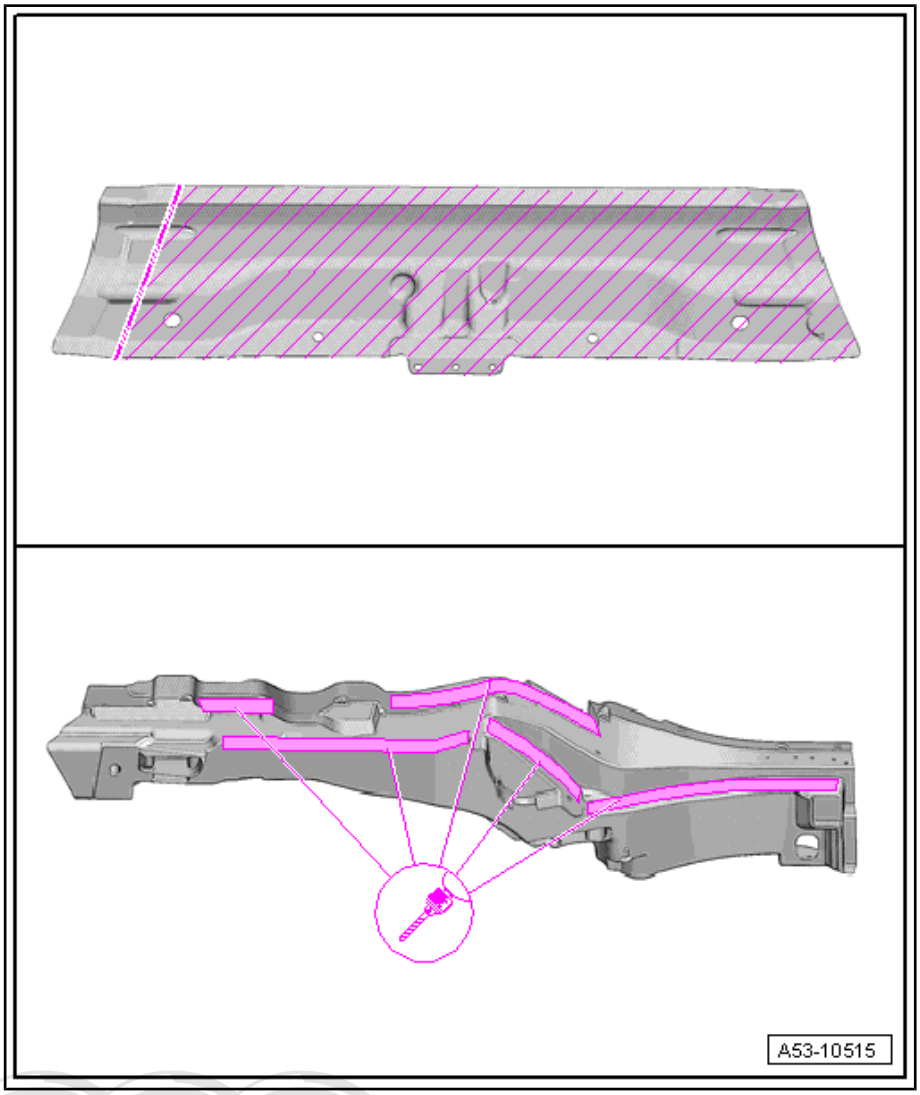

– Match up new part to body.
– Fix new part on alignment bracket.

Welding in

– Prepare flanges on body and new parts for welding.
– Fix new parts in position on alignment bracket.
– Weld in longitudinal member using shielded arc welding equipment : SG continuous seam.
– Secure original joints -a- with flow-drill screws using socket for flow-drill screws - VAS 6426 ⇒ page 4.

– Weld in at separating cut on floor panel using shielded arc welding equipment : SG continuous seam.

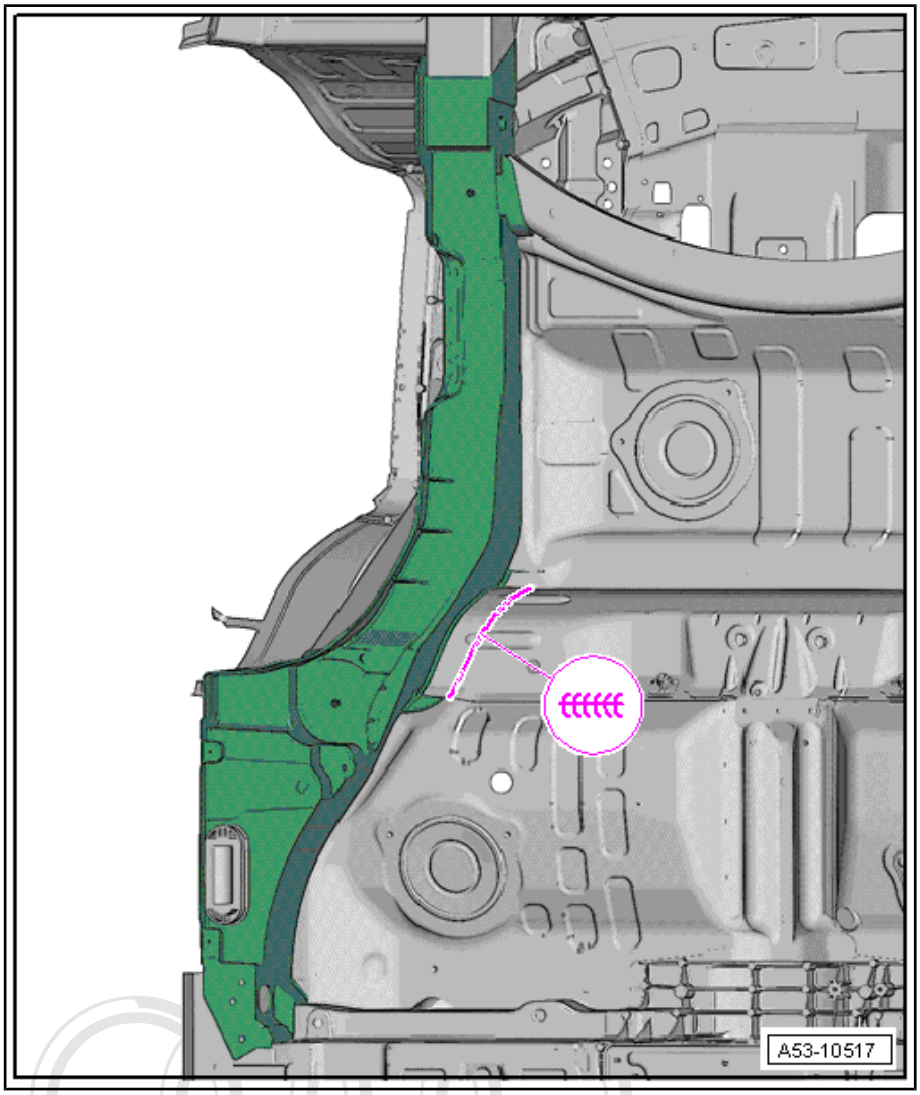

– Weld in longitudinal member using shielded arc welding equipment : SG continuous seam.

– Secure original joints -a- with flow-drill screws using socket for flow-drill screws - VAS 6426 - ⇒ page 4 .

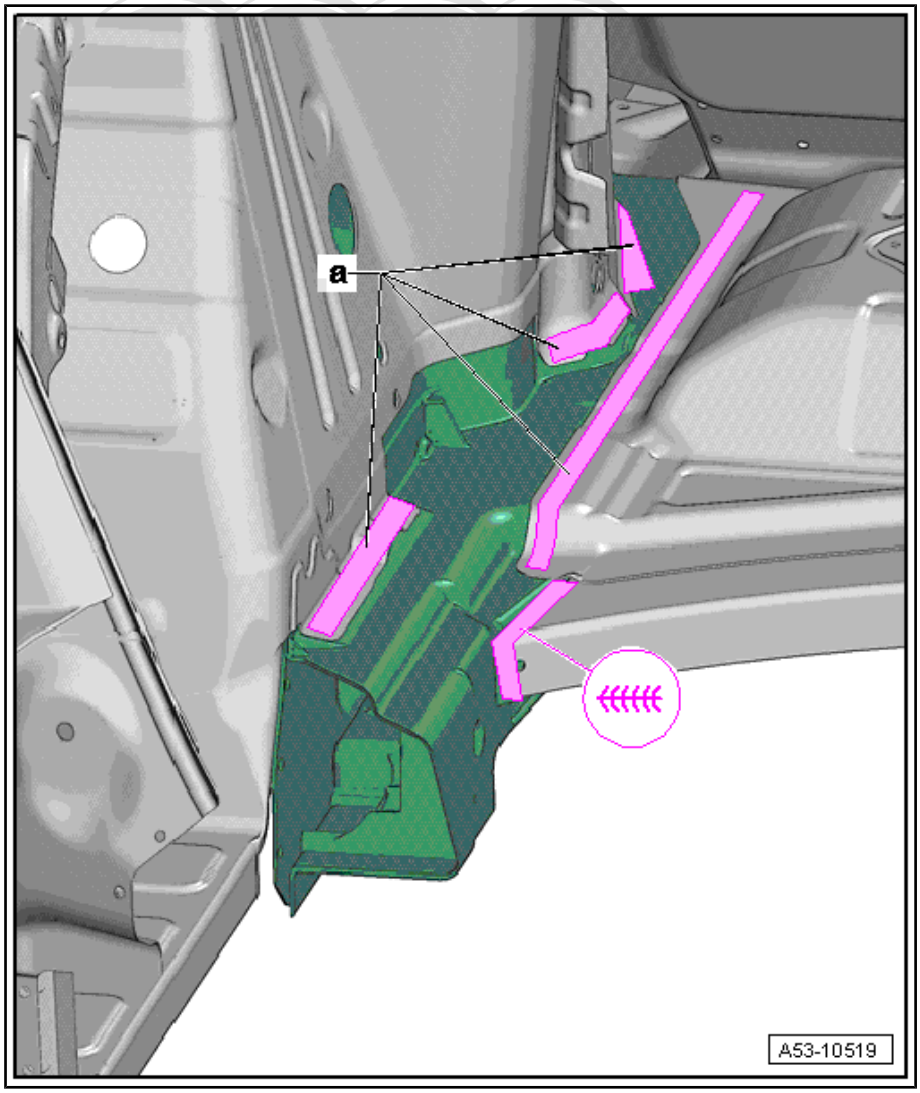

Riveting in

– Weld in longitudinal member using shielded arc welding equipment : SG continuous seam.

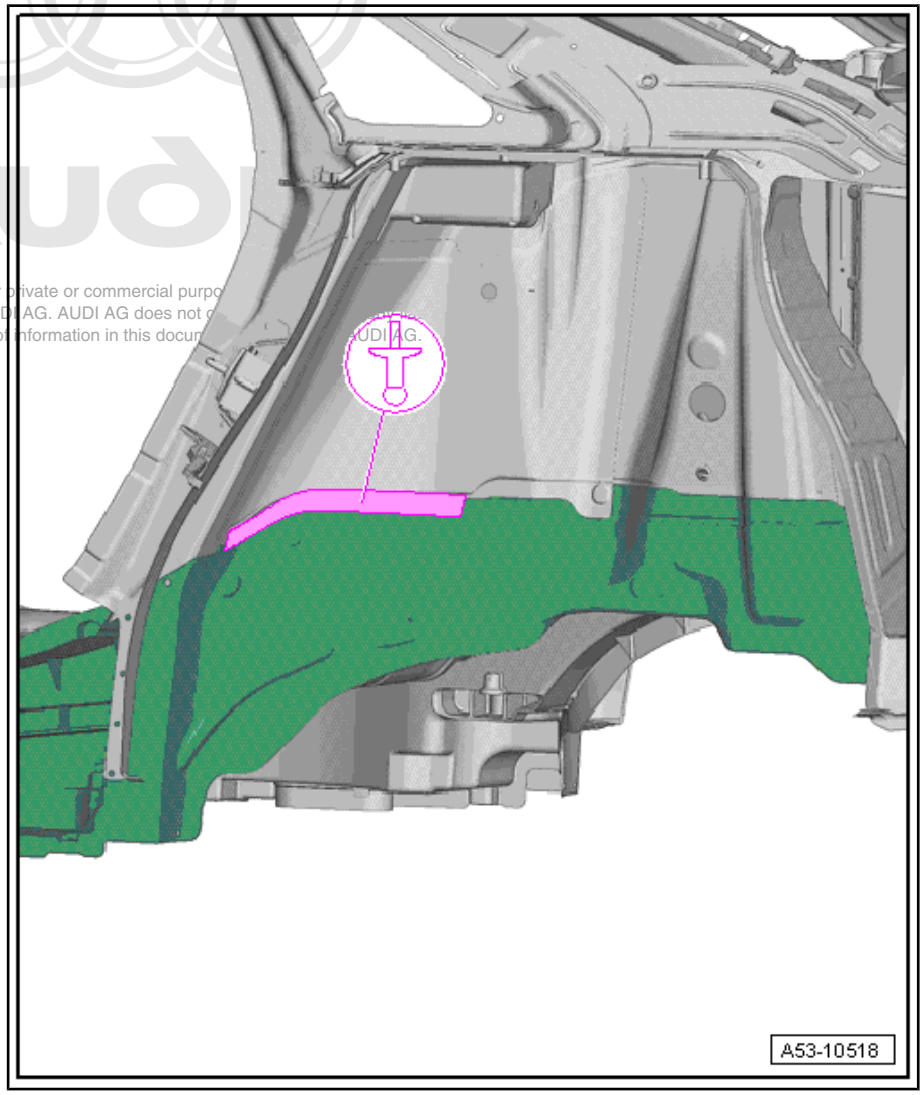

- Install spare wheel well ⇒ page 324 .
- Install inner cross panel ⇒ page 259 .
- Install cross panel ⇒ page 250 .
- Install rear cross member ⇒ page 269 .
- Install side panel ⇒ page 300 .
- Install wheel housing ⇒ page 315 .
- Install side member ⇒ page 214 .

RO: 53 55 55 00

8 Side panel - Renewal

1 - Side panel

2 - Separating cut in C-pillar

3 - Separating cut in D-pillar

4 - Bonded area

5 - Separating cut in side member

6 - Moulded foam inserts

7 - Separating cut

Partial renewal
Partial renewal is possible with this separating cut.

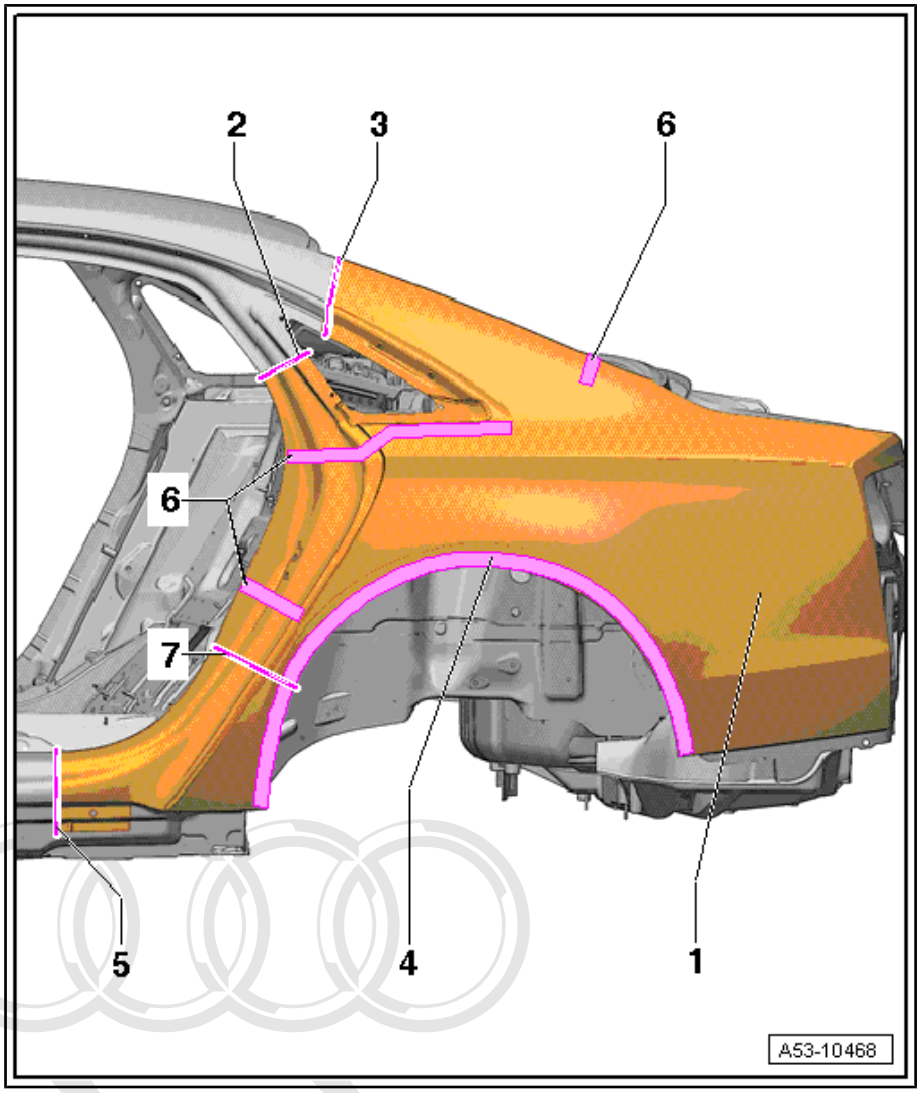

8.1 Notes for vehicles with hybrid drive

WARNING

Safety hazard: the engine can start unexpectedly.

Before carrying out general work on a vehicle with high-voltage electrical system, switch off the ignition and remove the ignition key from the vehicle.

DANGER!

When working on a vehicle with the ignition switched on or while the drive system is active, the engine can start unexpectedly and exhaust fumes can cause a health hazard in closed rooms. Moving parts can trap or draw in parts of the body and/or clothing (safety hazard).

Before switching on the ignition, perform the following steps:

- *Move selector lever to position P*
- *Activate parking brake*
- *Switch off ignition*
- *Open bonnet*
- *Connect battery charger (e.g. - VAS 5095A-) to jump-start connections of 12 V electrical system.*
- *Switch on ignition*

WARNING

Working on vehicles with high-voltage wiring:

- *Do not support yourself or tools on high-voltage wiring or associated components --> this can damage the insulation.*
- *High-voltage wiring must not be excessively bent or kinked --> this can damage the insulation.*
- *The round high-voltage connectors are colour-coded with an external coloured ring and are provided with mechanical coding or guide lugs. It is important to observe this coding when joining up the round high-voltage connectors; otherwise the connectors can be damaged.*

DANGER!

Risk of fatal injury if high-voltage components are damaged.

Observe the following when working in the vicinity of high-voltage components or wiring:

- *It is not permitted to use cutting or forming tools, other sharp-edged tools or heat sources such as welding, brazing, soldering, hot air or thermal bonding equipment.*
- *Before starting work, visually inspect the high-voltage components in the areas involved.*
- *Before working in the engine compartment, visually inspect the power and control electronics for electric drive - JX1- , electric drive motor - V141- , air conditioner compressor - V470- and high-voltage wiring.*
- *Before working on the vehicle underbody, visually inspect the high-voltage wiring and covers.*
- *Before working on the rear section of the vehicle, visually inspect the high-voltage wiring and the hybrid battery unit with the maintenance connector for high-voltage system - TW - .*
- *Visually inspect all potential equalisation lines.*

Check the following when making the visual inspection:

- *There must be no external damage on any component.*
- *The insulation of the high-voltage wiring and potential equalisation lines must not be damaged.*
- *There must be no unusual deformation of the high-voltage wiring.*
- *All high-voltage components must be identified by a red warning sticker.*

DANGER!

High voltage can cause fatal injury.

Danger of severe or fatal injuries from electric shock.

- *The high-voltage system may only be re-energised by a suitably qualified person (Audi high-voltage technician).*
- *The system may only be re-energised using the vehicle diagnostic tester via "Guided Fault Finding".*
- *The vehicle is then made ready for operation again by the qualified person (Audi high-voltage technician).*
- *The qualified person (Audi high-voltage technician) marks the vehicle by attaching the appropriate warning signs.*

DANGER!

High voltage can cause fatal injury.

Danger of severe or fatal injuries from electric shock.

- *The high-voltage system may only be de-energised by a suitably qualified person (Audi high-voltage technician).*
- *It must be definitely confirmed that the high-voltage system is de-energised. The system may only be de-energised using the vehicle diagnostic tester via "Guided Fault Finding".*
- *The qualified person (Audi high-voltage technician) confirms that the system is de-energised and ensures that it cannot be re-energised by fitting the locking cap - T40262- and by storing the ignition key and the maintenance connector for high-voltage system - TW - in a safe place.*
- *The qualified person (Audi high-voltage technician) marks the vehicle by attaching the appropriate warning signs.*

Note

Please refer to the Electronic parts catalogue when ordering replacement parts.

WARNING

Accidents can be caused if the driver is distracted by test equipment while road-testing, or if test equipment is not properly secured.

Injuries can be caused if the passenger's airbag is triggered in a collision.

- *The use of test equipment while driving causes distraction.*
- *There is an increased risk of injury if test equipment is not secured.*
- *Move the front passenger's seat back as far as it will go.*
- *Use only the vehicle diagnostic and service information system - VAS 5052- or the diagnostic system - VAS 5053- .*
- *The test equipment -1- must rest flat on the passenger's thighs (as shown in illustration) and must be operated by the passenger.*

8.2 Tools

Special tools and workshop equipment required

- Double cartridge gun - VAS 6453-
- Shielded arc welding equipment - VAS 6388-
- Compact booster - VAS 6790-
- Rechargeable riveter - VAS 5279 A-

- Alternatively, you can use the rechargeable riveter - VAS 5279 B- . This is a complete set.

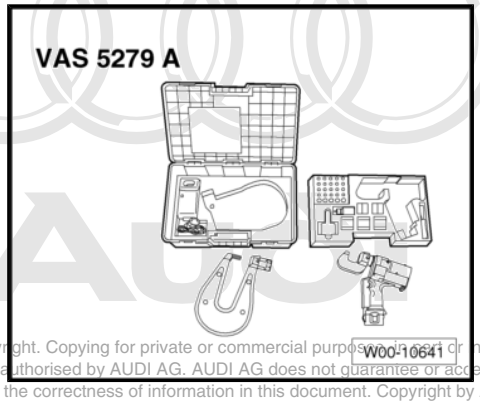

- Pneumatic jig-saw - VAS 5108 - or body saw - VAS 6598 - or -VAS 6780-

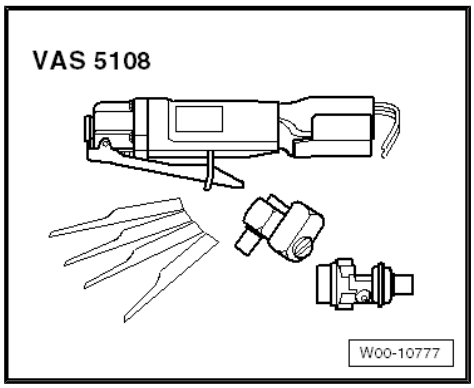

- Pop rivet pliers - VAS 5072-

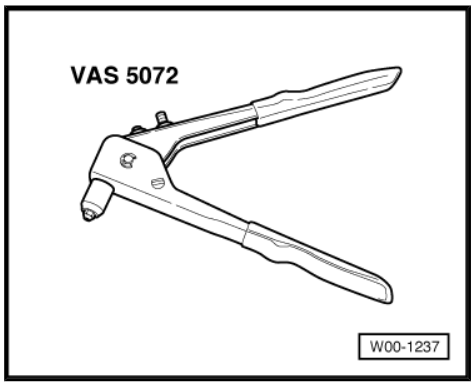

8.3 Procedure

Cutting locations

Permitted separating cuts on complete side panel ⇒ page 241 .

– Separate original joint using rechargeable riveter - VAS 5279 A- or compact booster - VAS 6790- . For attachments see ⇒ page 15 .

– Grind through outer edge at wheel arch using compact angle grinder .

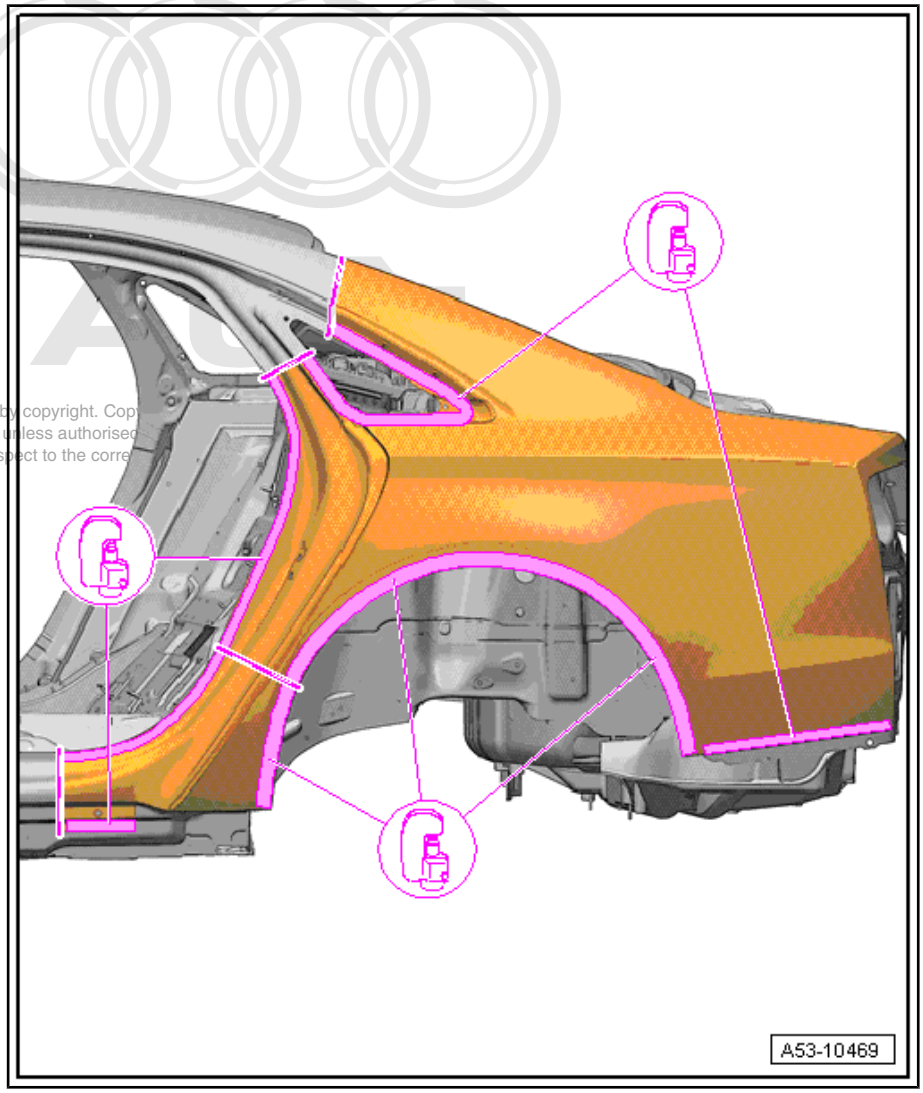

- Make separating cuts at C and D-pillar according to extent of damage.
- Make separating cuts in side member according to extent of damage. Take care not to damage internal reinforcement.
- Separate original joint using rechargeable riveter - VAS 5279 A- or compact booster - VAS 6790- . For attachments see ⇒ page 15 .

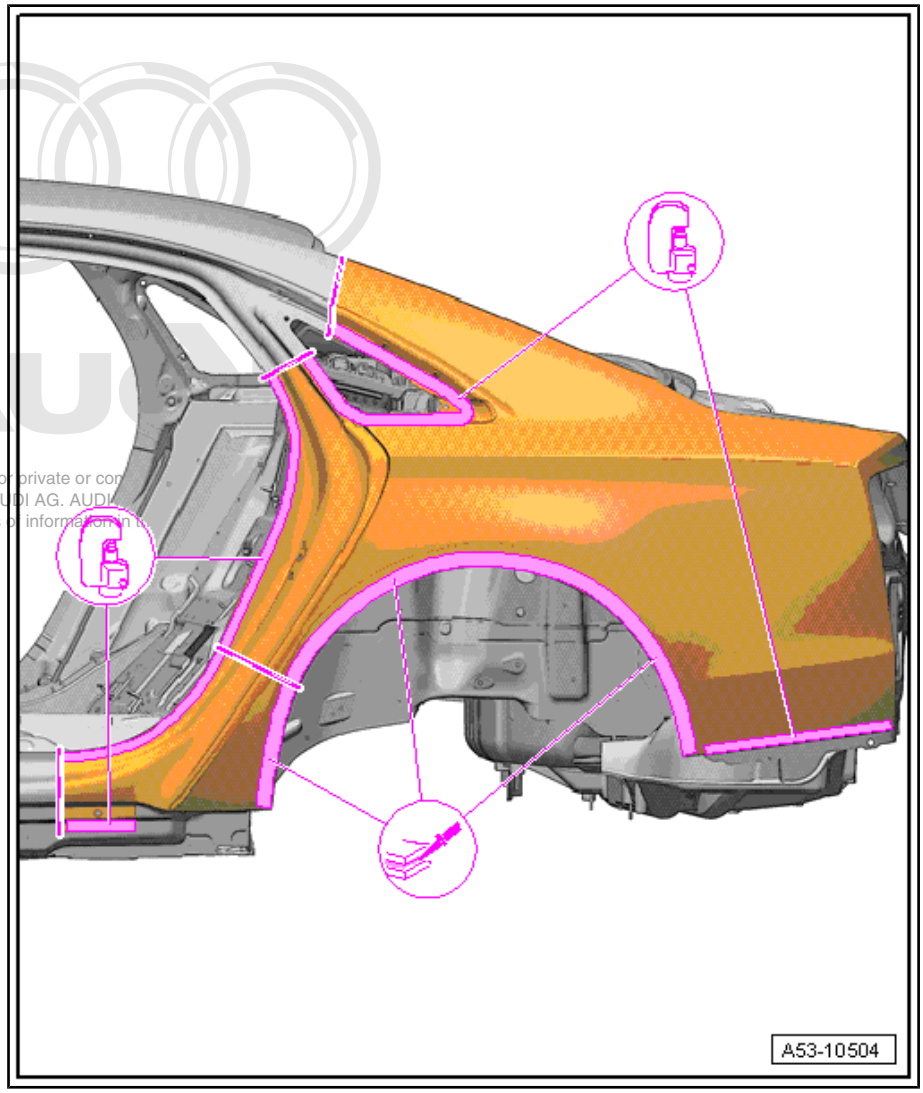

– Separate original joint using rechargeable riveter - VAS 5279 A- or compact booster - VAS 6790- . For attachments see ⇒ page 15 .

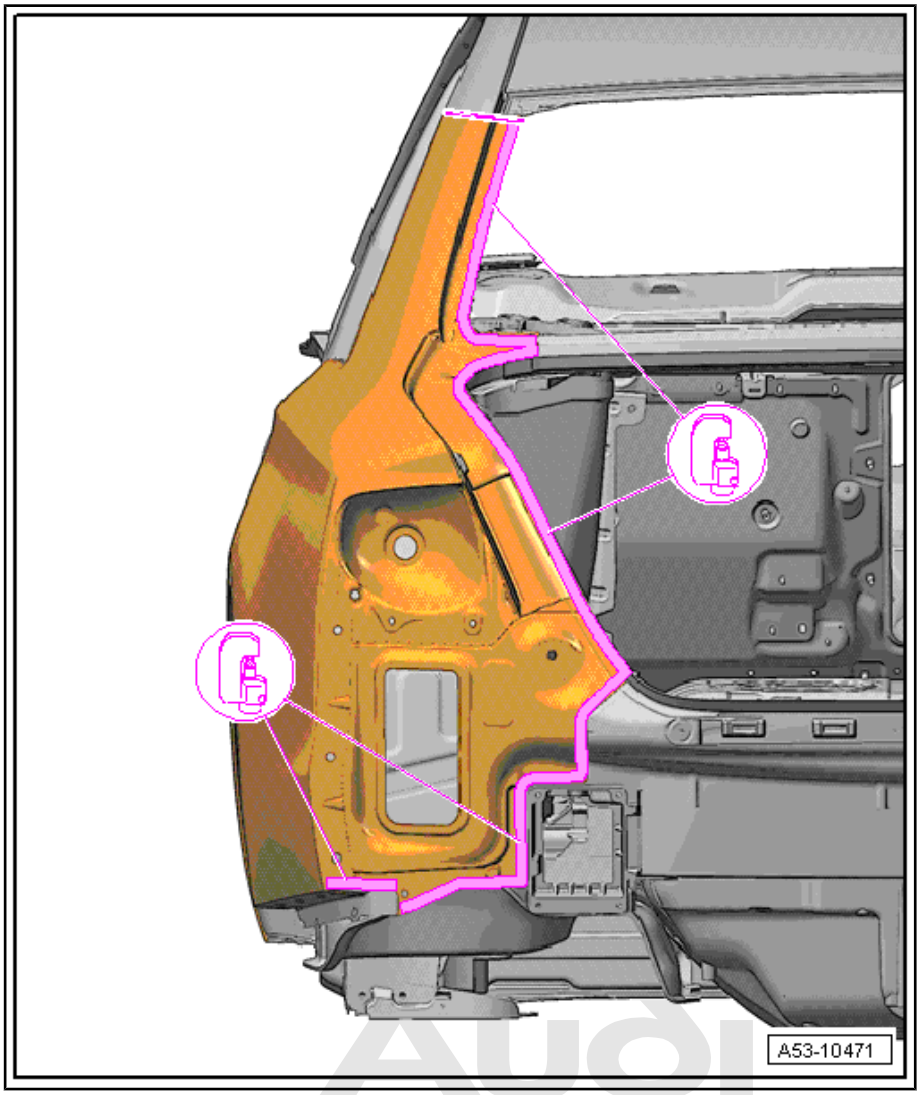

– Remove remaining material using compact angle grinder.

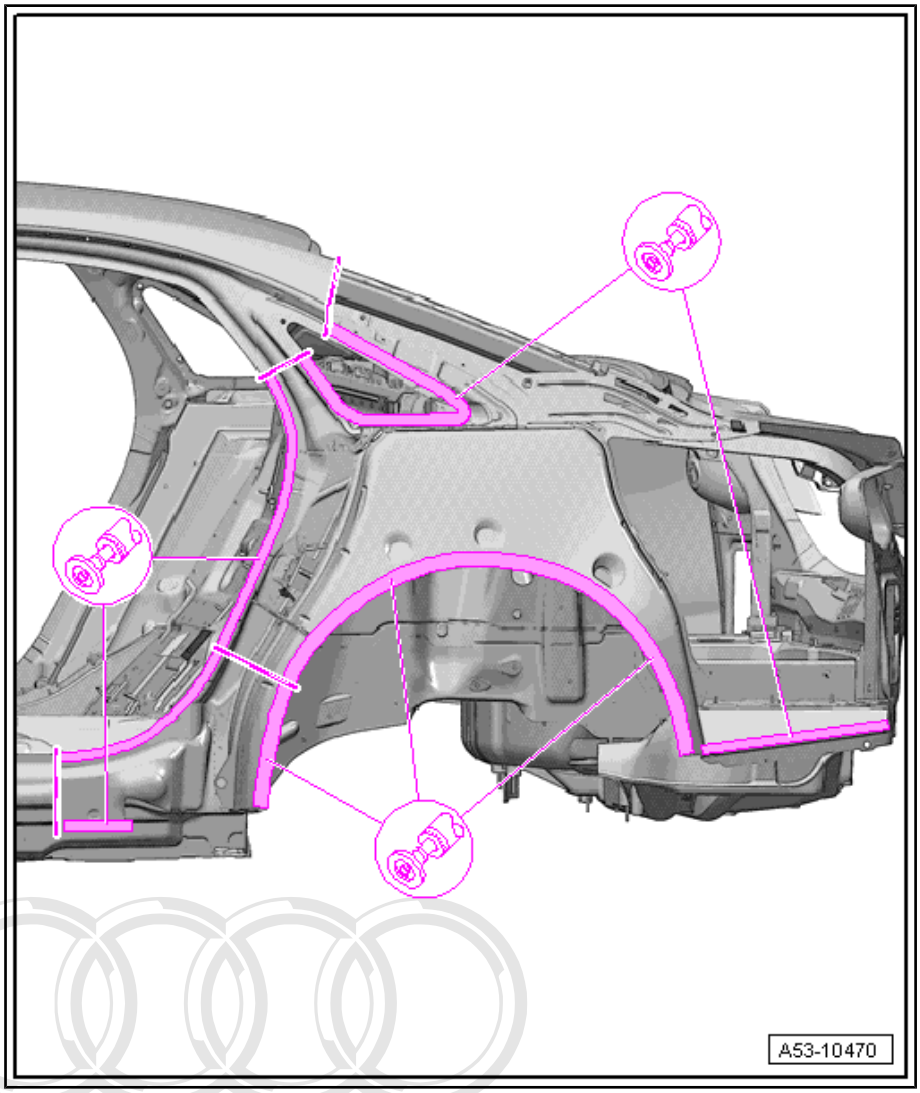

– Remove remaining material using compact angle grinder .

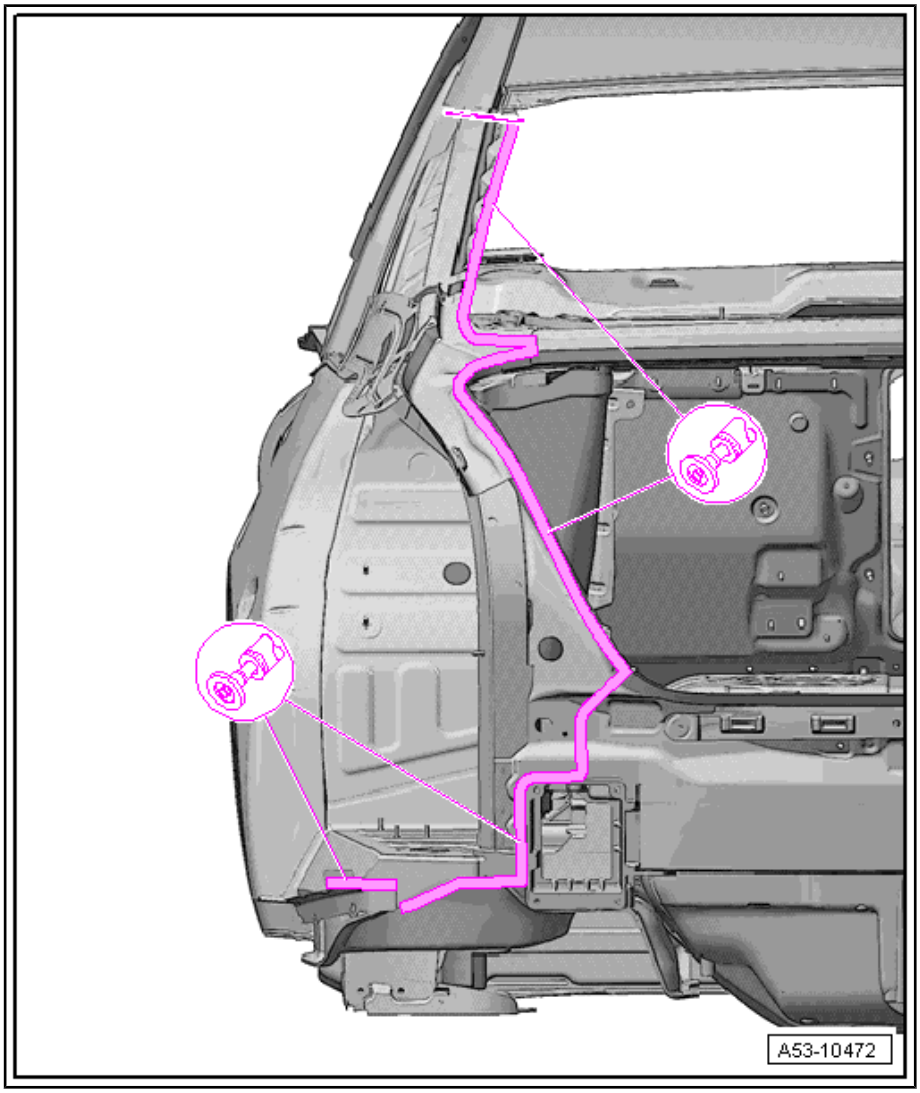

Replacement parts

- Side frame (sub-part)
- 2-component epoxy adhesive - DA 001 730 A2-
- Punch rivets (self-piercing rivets)

Preparing new part

– Transfer separating cuts to new part and cut off hatched area using body saw .

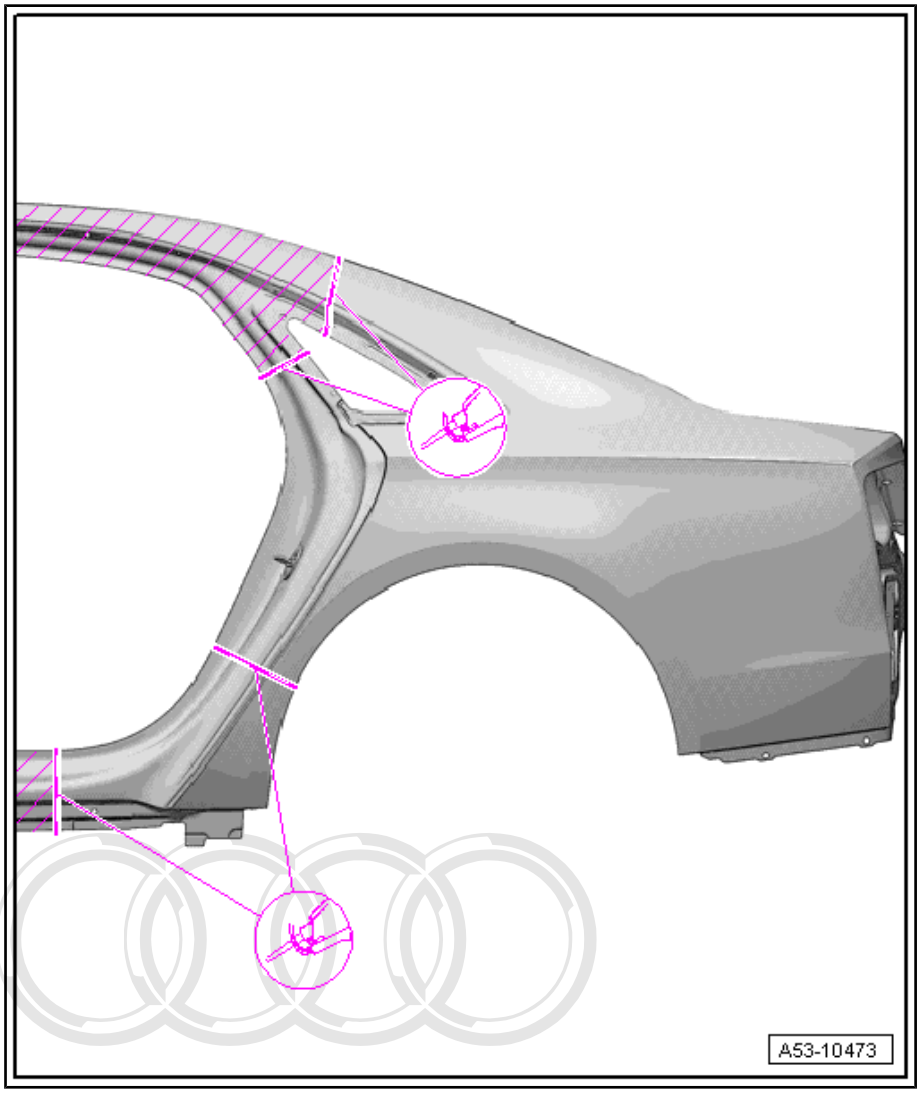

Weld in weld pool backing plates at separating cuts using surplus material.

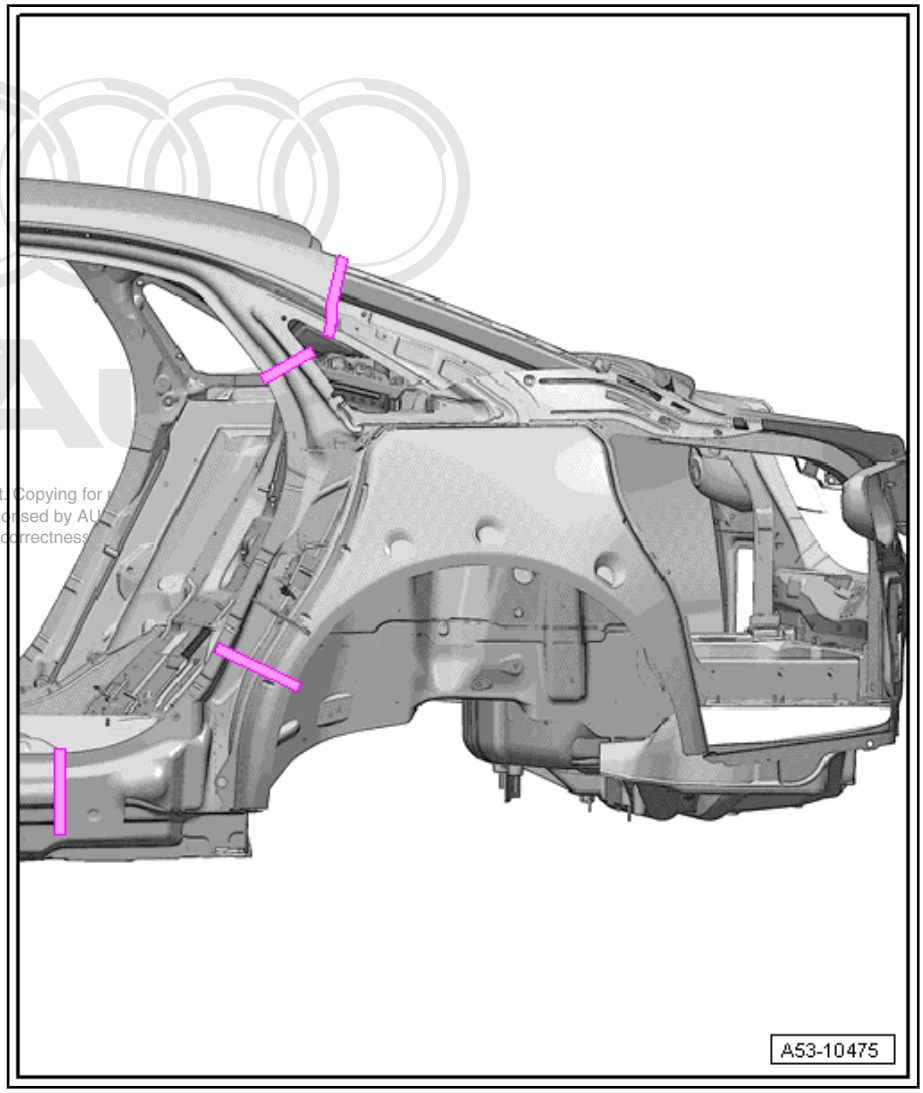

– Fix new part on portal gauge.

Preparing joints for adhesive application

– Prepare flanges on body and new parts for bonding and welding.

– Prepare bonding area with silicate stone - DA 009 800 - and clean.

– Apply aluminium primer - DA 009 801 - to bonding surfaces using applicator - D 009 500 25 - .

– Clean new part with cleaning solution - D 009 401 04- .

– Apply 2-component epoxy adhesive - DA 180 A00 A2- to entire riveting area and wheel housing using double cartridge gun - VAS 6453- .

– Apply adhesive to flange area. Two beads of adhesive: 3.5 mm diameter.

– Place new part on portal gauge.

Welding in new part

– Weld in side panel using shielded arc welding equipment : SG continuous seam.

– Fold over wheel arch flange. Wipe off emerging adhesive and seal joint.

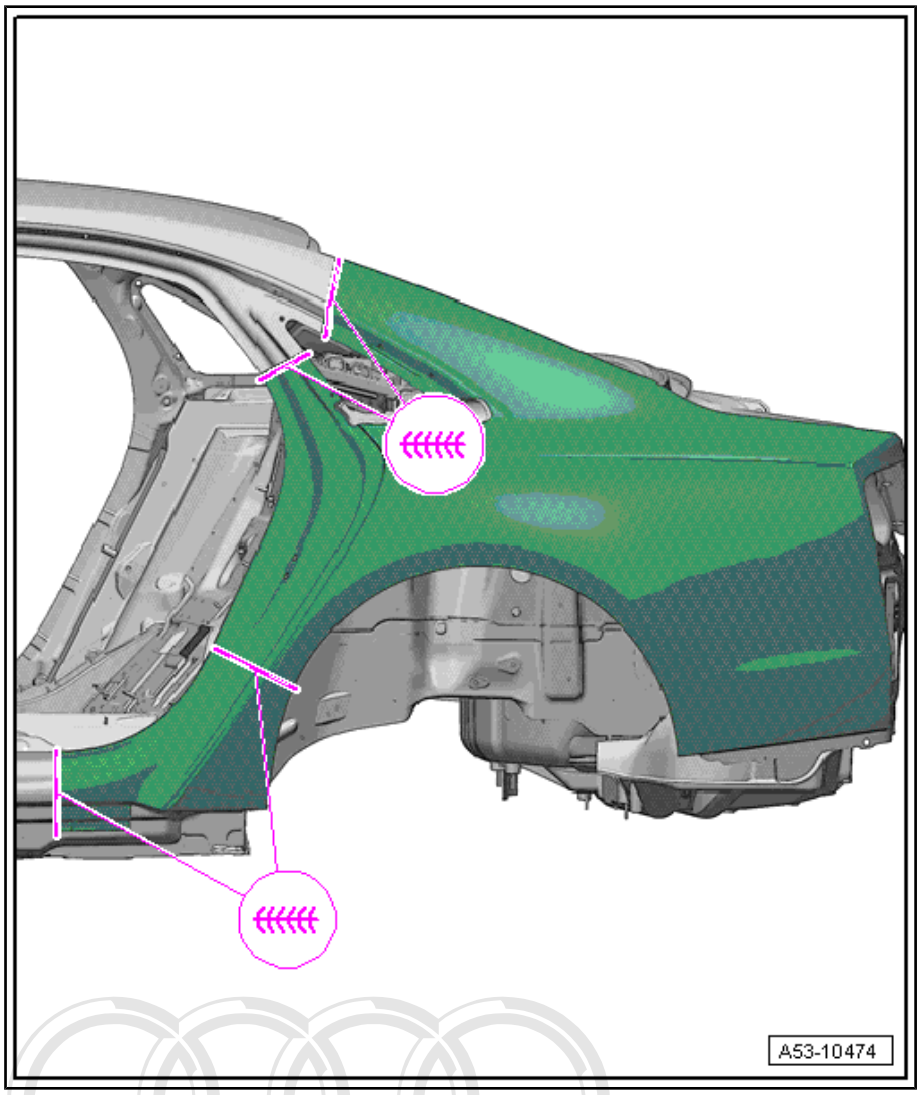

Riveting in

– Rivet in side panel using rechargeable riveter - VAS 5279 A- or compact booster - VAS 6790 - . For attachments see ⇒ page 15 .

– Weld in side panel using shielded arc welding equipment : SG continuous seam (staggered - with gaps).

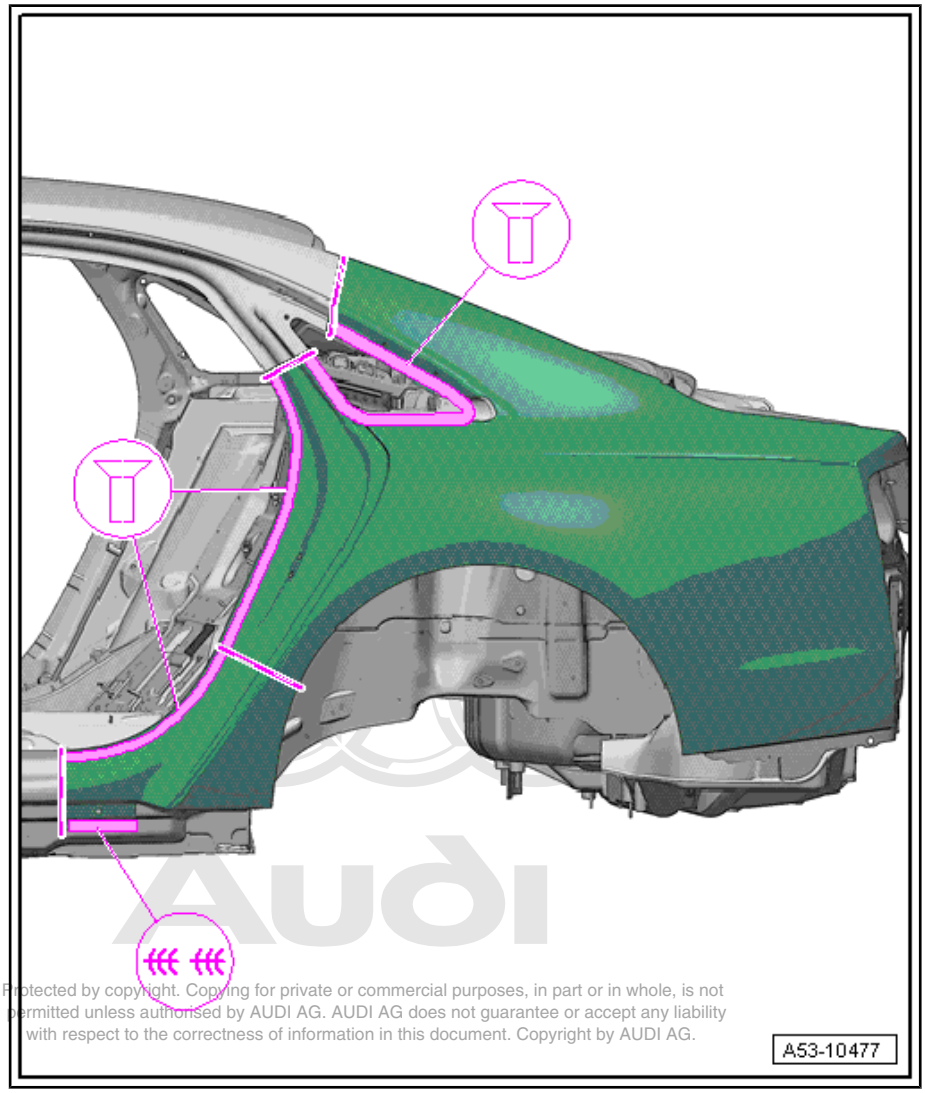

– Rivet in side panel using rechargeable riveter - VAS 5279 A- or compact booster - VAS 6790 - . For attachments see ⇒ page 15 .

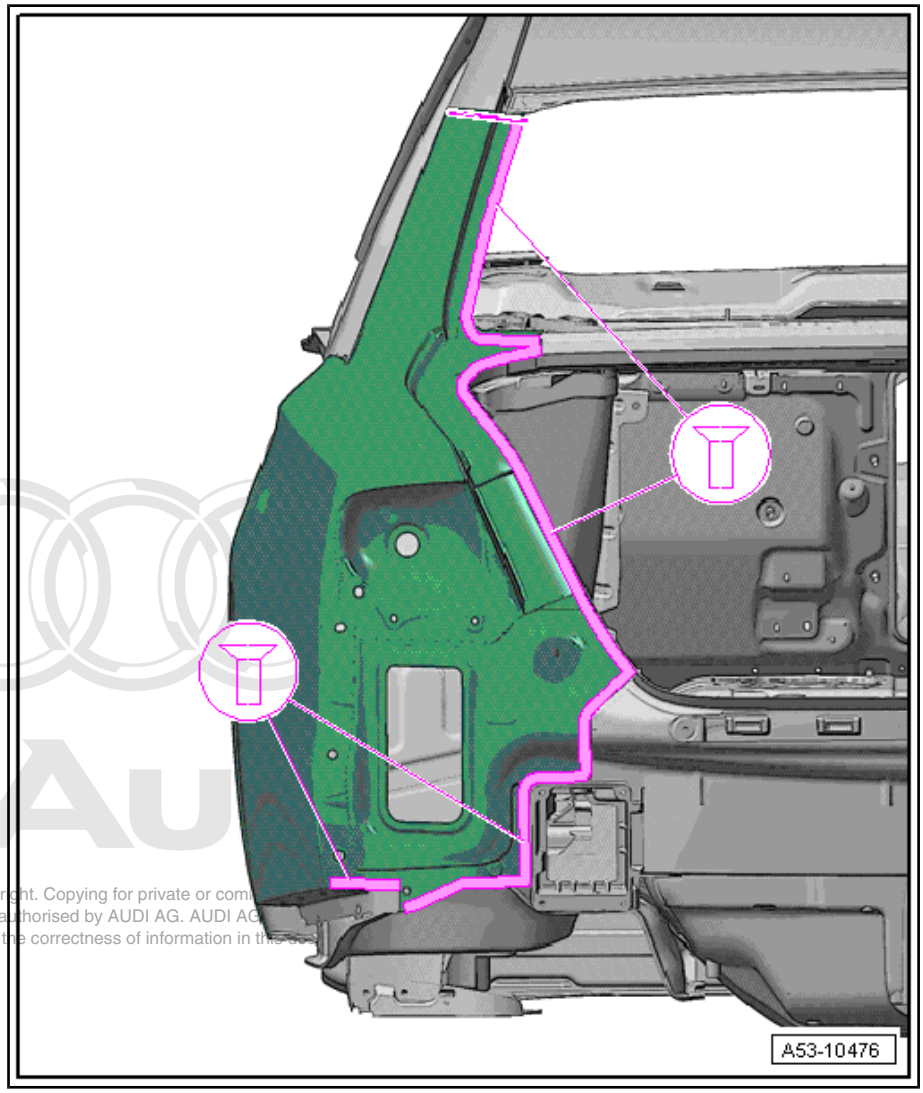

RO: 53 69 55 52

9 Rear wheel housing - Renewal

1 - Outer wheel housing

2 - Moulded foam inserts

3 - Corner panel

4 - Lower C-pillar reinforcement

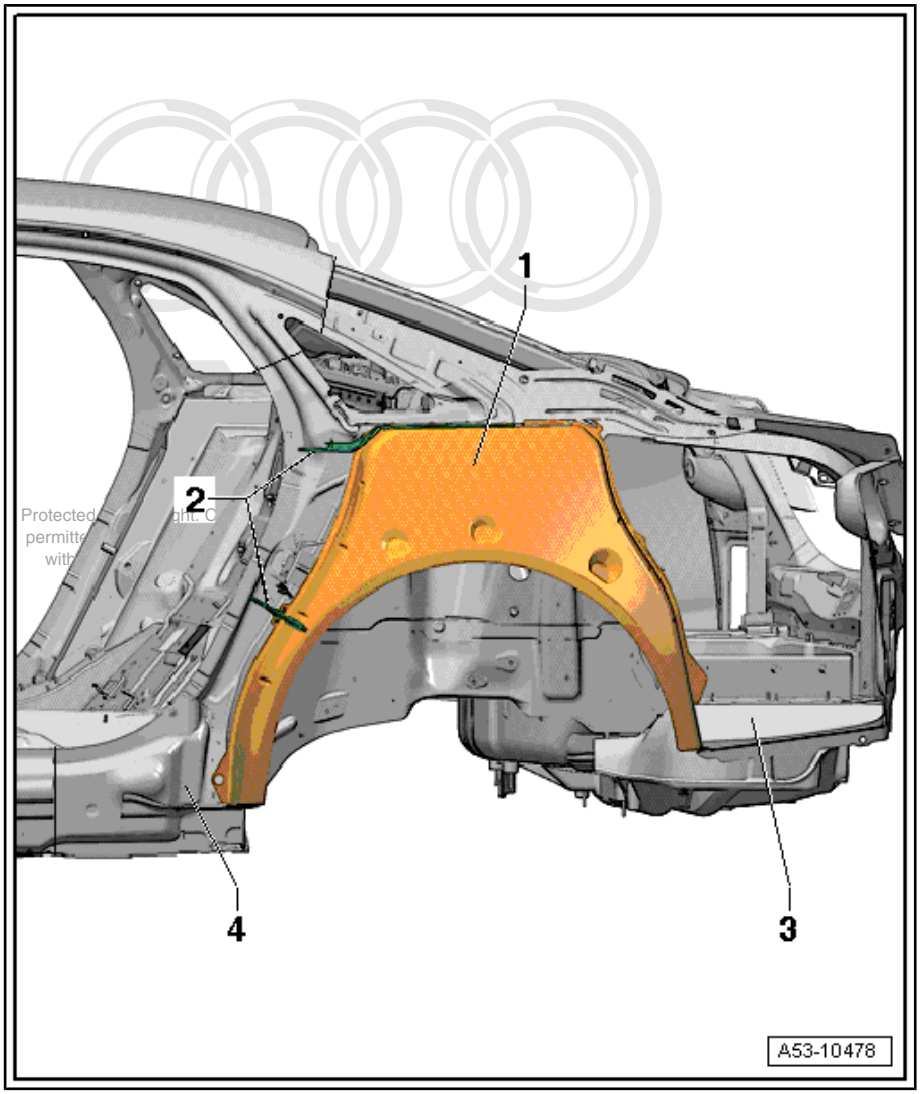

9.1 Notes for vehicles with hybrid drive

WARNING

Safety hazard: the engine can start unexpectedly.

Before carrying out general work on a vehicle with high-voltage electrical system, switch off the ignition and remove the ignition key from the vehicle.

DANGER!

When working on a vehicle with the ignition switched on or while the drive system is active, the engine can start unexpectedly and exhaust fumes can cause a health hazard in closed rooms. Moving parts can trap or draw in parts of the body and/or clothing (safety hazard).

Before switching on the ignition, perform the following steps:

- *Move selector lever to position P*
- *Activate parking brake*
- *Switch off ignition*
- *Open bonnet*
- *Connect battery charger (e.g. - VAS 5095A-) to jump-start connections of 12 V electrical system.*
- *Switch on ignition*

WARNING

Working on vehicles with high-voltage wiring:

- *Do not support yourself or tools on high-voltage wiring or associated components --> this can damage the insulation.*
- *High-voltage wiring must not be excessively bent or kinked --> this can damage the insulation.*
- *The round high-voltage connectors are colour-coded with an external coloured ring and are provided with mechanical coding or guide lugs. It is important to observe this coding when joining up the round high-voltage connectors; otherwise the connectors can be damaged.*

DANGER!

Risk of fatal injury if high-voltage components are damaged.

Observe the following when working in the vicinity of high-voltage components or wiring:

- *It is not permitted to use cutting or forming tools, other sharp-edged tools or heat sources such as welding, brazing, soldering, hot air or thermal bonding equipment.*
- *Before starting work, visually inspect the high-voltage components in the areas involved.*
- *Before working in the engine compartment, visually inspect the power and control electronics for electric drive - JX1- , electric drive motor - V141- , air conditioner compressor - V470- and high-voltage wiring.*
- *Before working on the vehicle underbody, visually inspect the high-voltage wiring and covers.*
- *Before working on the rear section of the vehicle, visually inspect the high-voltage wiring and the hybrid battery unit with the maintenance connector for high-voltage system - TW - .*
- *Visually inspect all potential equalisation lines.*

Check the following when making the visual inspection:

- *There must be no external damage on any component.*
- *The insulation of the high-voltage wiring and potential equalisation lines must not be damaged.*
- *There must be no unusual deformation of the high-voltage wiring.*
- *All high-voltage components must be identified by a red warning sticker.*

DANGER!

High voltage can cause fatal injury.

Danger of severe or fatal injuries from electric shock.

- *The high-voltage system may only be re-energised by a suitably qualified person (Audi high-voltage technician).*
- *The system may only be re-energised using the vehicle diagnostic tester via “Guided Fault Finding”.*
- *The vehicle is then made ready for operation again by the qualified person (Audi high-voltage technician).*
- *The qualified person (Audi high-voltage technician) marks the vehicle by attaching the appropriate warning signs.*

DANGER!

High voltage can cause fatal injury.

Danger of severe or fatal injuries from electric shock.

- *The high-voltage system may only be de-energised by a suitably qualified person (Audi high-voltage technician).*
- *It must be definitely confirmed that the high-voltage system is de-energised. The system may only be de-energised using the vehicle diagnostic tester via "Guided Fault Finding".*
- *The qualified person (Audi high-voltage technician) confirms that the system is de-energised and ensures that it cannot be re-energised by fitting the locking cap - T40262- and by storing the ignition key and the maintenance connector for high-voltage system - TW - in a safe place.*
- *The qualified person (Audi high-voltage technician) marks the vehicle by attaching the appropriate warning signs.*

Note

Please refer to the Electronic parts catalogue when ordering replacement parts.

WARNING

Accidents can be caused if the driver is distracted by test equipment while road-testing, or if test equipment is not properly secured.

Injuries can be caused if the passenger's airbag is triggered in a collision.

- *The use of test equipment while driving causes distraction.*
- *There is an increased risk of injury if test equipment is not secured.*
- *Move the front passenger's seat back as far as it will go.*
- *Use only the vehicle diagnostic and service information system - VAS 5052- or the diagnostic system - VAS 5053- .*
- *The test equipment -1- must rest flat on the passenger's thighs (as shown in illustration) and must be operated by the passenger.*

9.2 Tools

Special tools and workshop equipment required

- Compact booster - VAS 6790-

- Pneumatic glue gun - V.A.G 2005 B-

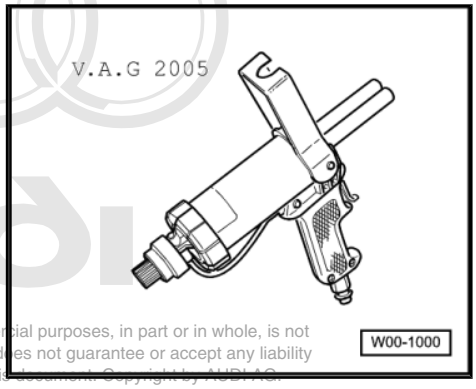

- Shielded arc welding equipment - VAS 6388-
- Rechargeable riveter - VAS 5279 A-
- Alternatively, you can use the rechargeable riveter - VAS 5279 B- . This is a complete set.

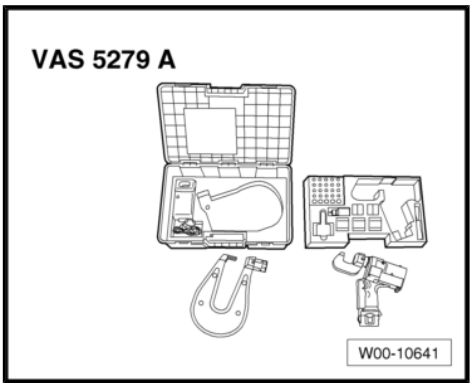

- Pneumatic jig-saw - VAS 5108 - or body saw - VAS 6598 - or -VAS 6780-

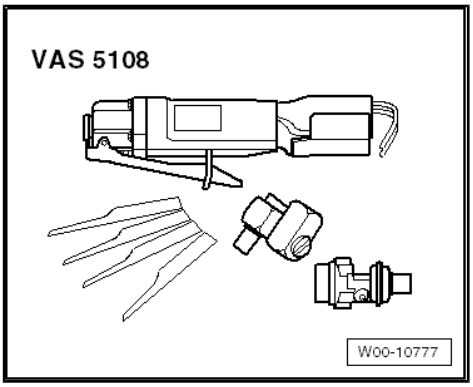

- Compact angle grinder - VAS 5167-

9.3 Procedure

- Side panel removed ⇒ page 300

Removing

– Make separating cut parallel to inner wheel housing using body saw .

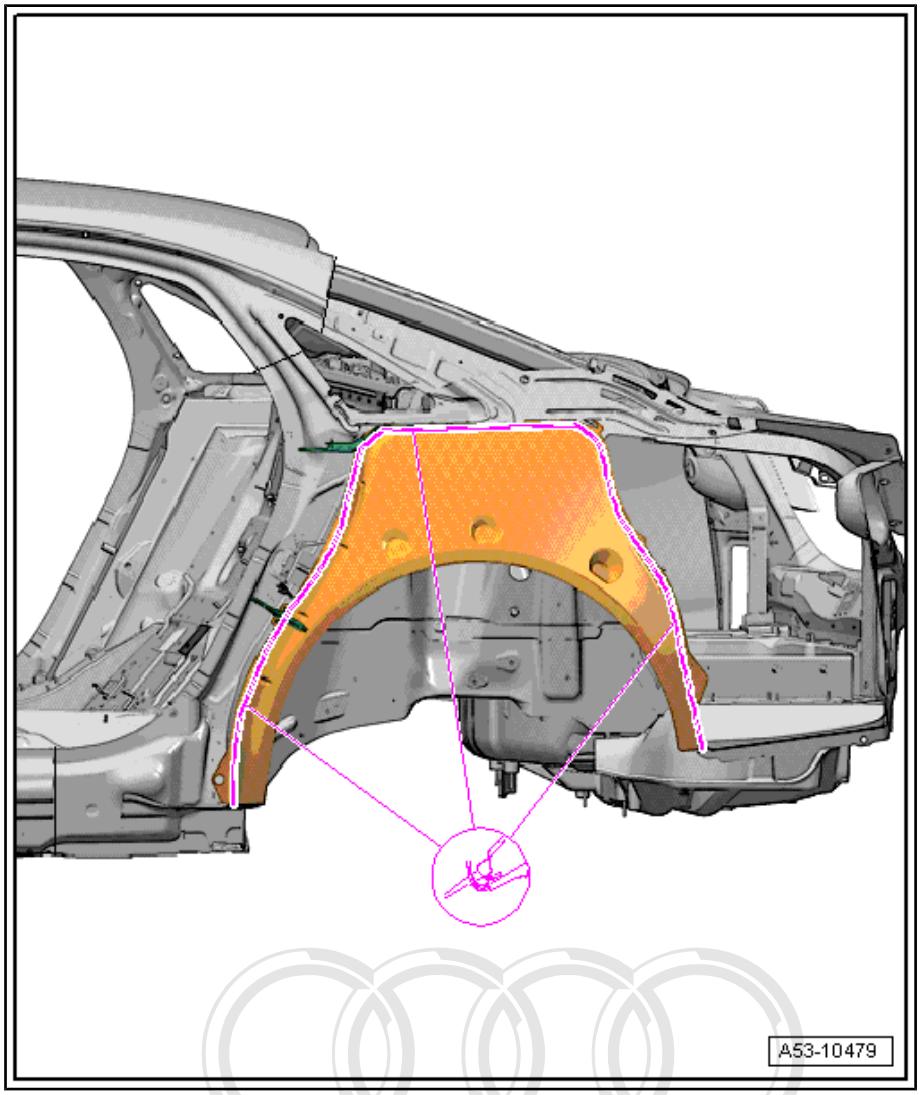

– Remove remaining material using compact angle grinder .

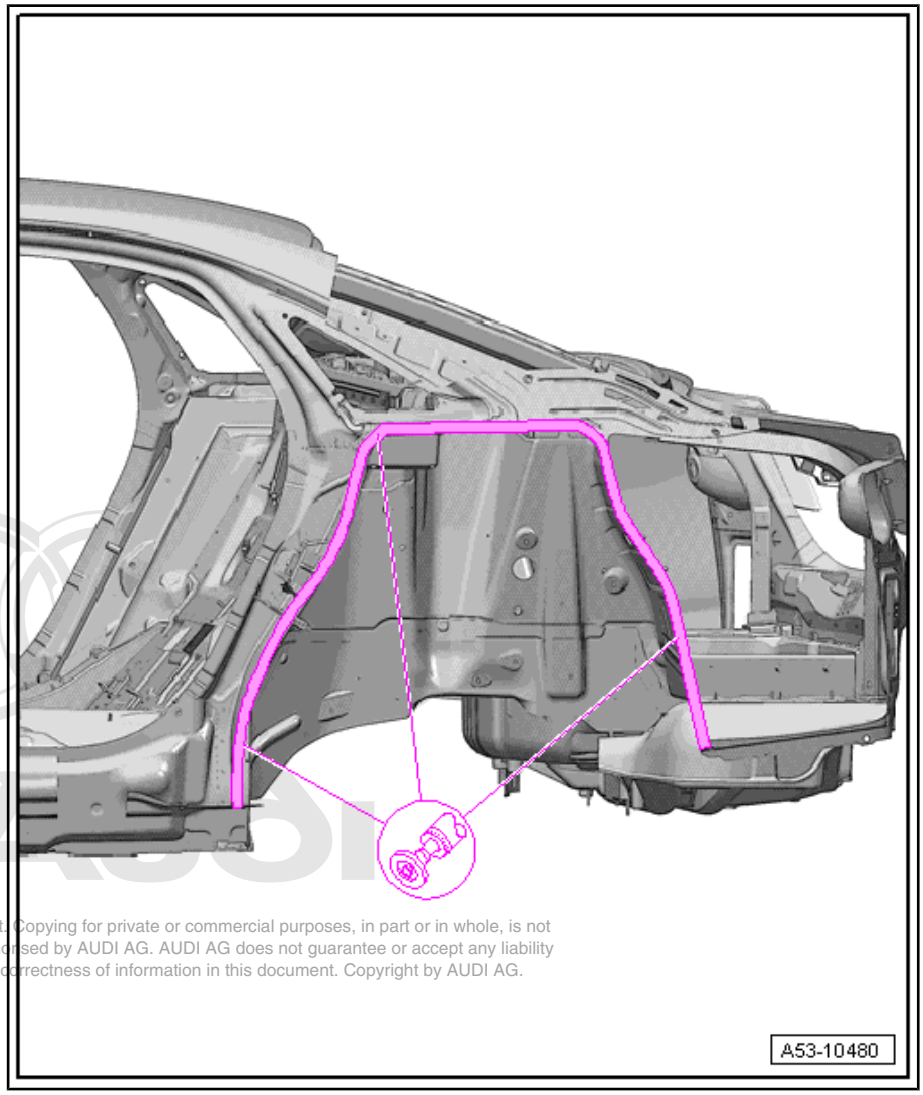

Replacement part

- ♦ Rear outer wheel housing
- ♦ Punch rivets (self-piercing rivets)

Preparing joints for adhesive application

- Prepare flanges on body and new parts for bonding and welding.
- Prepare bonding area with silicate stone - DA 009 800 - and clean.
- Apply aluminium primer - DA 009 801 - to bonding surfaces using applicator - D 009 500 25 - .
- Clean new part with cleaning solution - D 009 401 04- .
- Apply 2-component epoxy adhesive - DA 0001 730 A2- to entire riveting area and wheel housing using pneumatic glue gun - V.A.G 2005 B- .

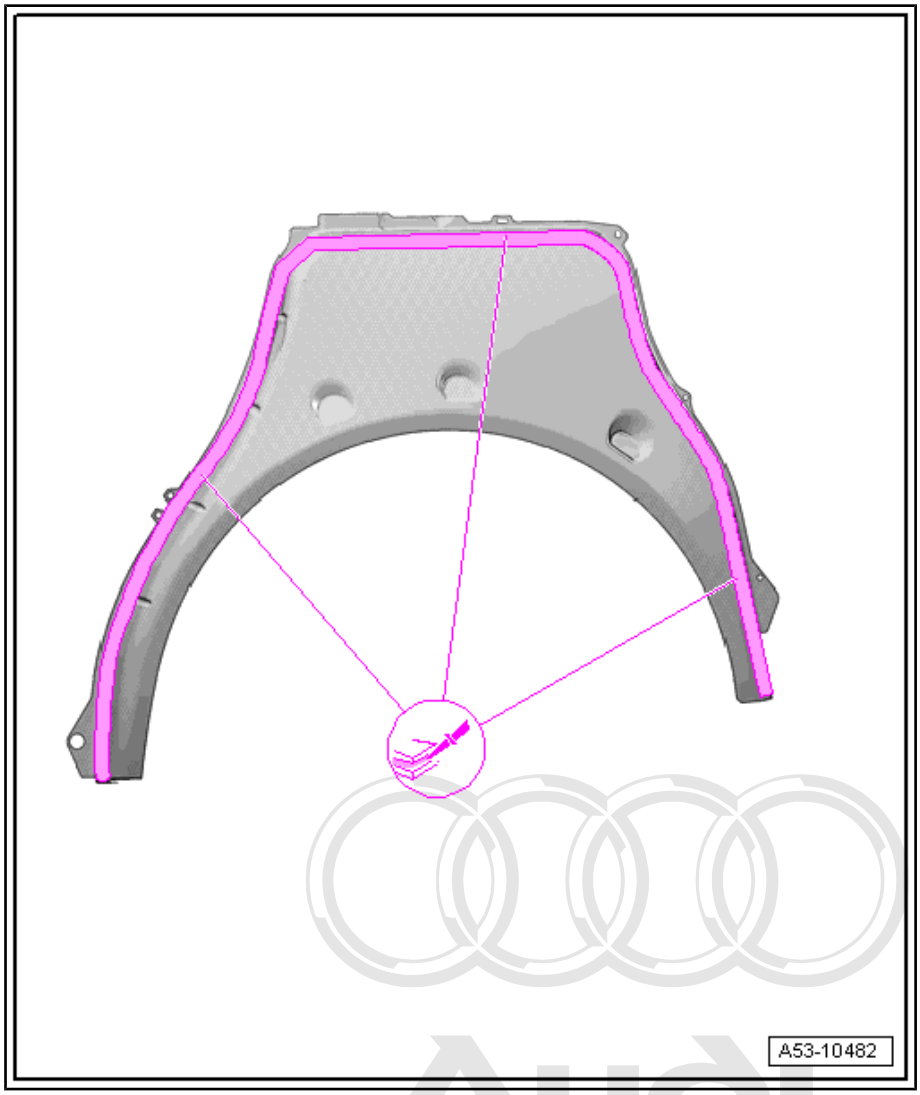

Installing

- Match up outer wheel housing and fix in position.
- Check fit relative to side panel.
- Rivet in wheel housing using rechargeable riveter - VAS 5279 A- or compact booster - VAS 6790 - . For attachments see ⇒ page 15 .
- Alternatively, joint can also be welded using shielded arc welding equipment : SG continuous seam (staggered - with gaps).

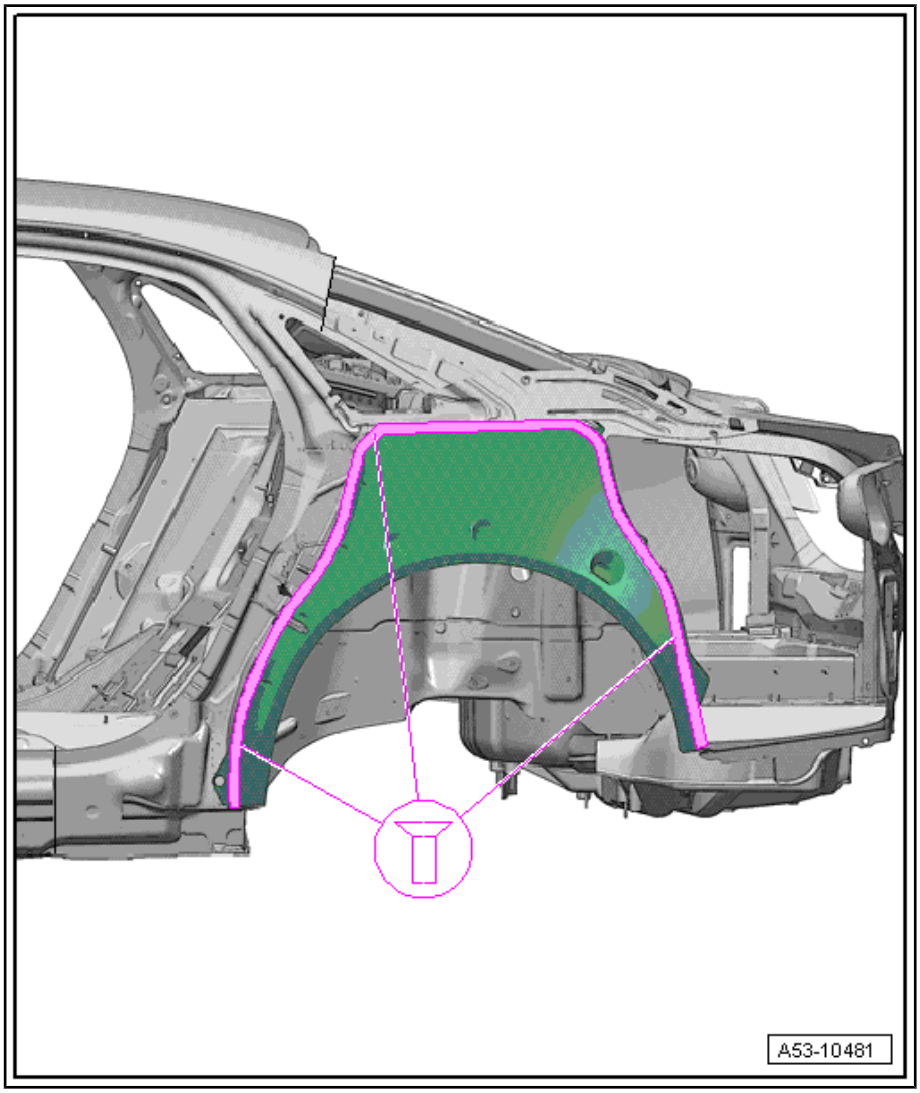

- Install side panel ⇒ page 300 .

RO: 53 80 55 50

10 Spare wheel well - Renewal

Note

The spare wheel well is made of plastic.

The cross panels are removed in the illustration to show the spare wheel well more clearly. These parts do not necessarily have to be removed for the repair.

1 - Spare wheel well

2 - Cross member

3 - Longitudinal member (right-side)

4 - Longitudinal member (left-side)

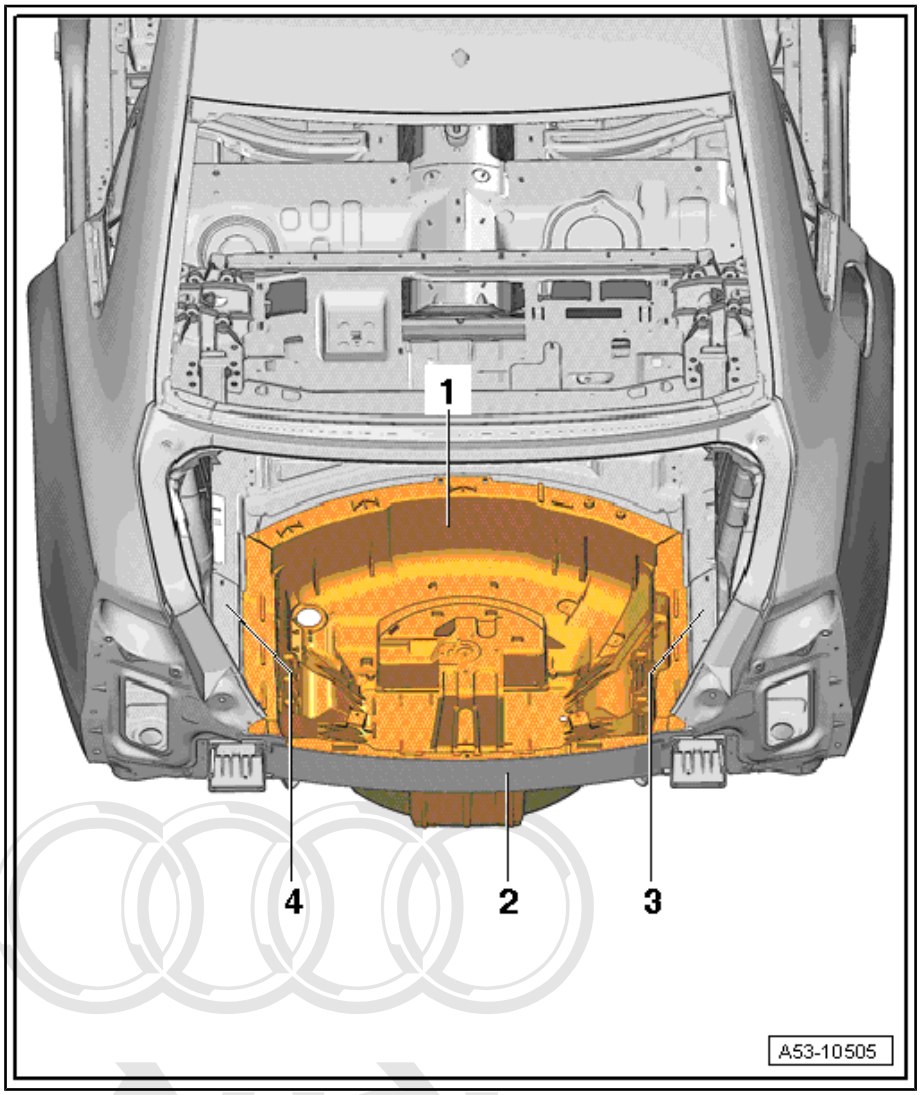

10.1 Notes for vehicles with hybrid drive

WARNING

Safety hazard: the engine can start unexpectedly.

Before carrying out general work on a vehicle with high-voltage electrical system, switch off the ignition and remove the ignition key from the vehicle.

DANGER!

When working on a vehicle with the ignition switched on or while the drive system is active, the engine can start unexpectedly and exhaust fumes can cause a health hazard in closed rooms. Moving parts can trap or draw in parts of the body and/or clothing (safety hazard).

Before switching on the ignition, perform the following steps:

- *Move selector lever to position P*
- *Activate parking brake*
- *Switch off ignition*
- *Open bonnet*
- *Connect battery charger (e.g. - VAS 5095A-) to jump-start connections of 12 V electrical system.*
- *Switch on ignition*

WARNING

Working on vehicles with high-voltage wiring:

- *Do not support yourself or tools on high-voltage wiring or associated components --> this can damage the insulation.*
- *High-voltage wiring must not be excessively bent or kinked --> this can damage the insulation.*
- *The round high-voltage connectors are colour-coded with an external coloured ring and are provided with mechanical coding or guide lugs. It is important to observe this coding when joining up the round high-voltage connectors; otherwise the connectors can be damaged.*

DANGER!

Risk of fatal injury if high-voltage components are damaged.

Observe the following when working in the vicinity of high-voltage components or wiring:

- *It is not permitted to use cutting or forming tools, other sharp-edged tools or heat sources such as welding, brazing, soldering, hot air or thermal bonding equipment.*
- *Before starting work, visually inspect the high-voltage components in the areas involved.*
- *Before working in the engine compartment, visually inspect the power and control electronics for electric drive - JX1- , electric drive motor - V141- , air conditioner compressor - V470- and high-voltage wiring.*
- *Before working on the vehicle underbody, visually inspect the high-voltage wiring and covers.*
- *Before working on the rear section of the vehicle, visually inspect the high-voltage wiring and the hybrid battery unit with the maintenance connector for high-voltage system - TW - .*
- *Visually inspect all potential equalisation lines.*

Check the following when making the visual inspection:

- *There must be no external damage on any component.*
- *The insulation of the high-voltage wiring and potential equalisation lines must not be damaged.*
- *There must be no unusual deformation of the high-voltage wiring.*
- *All high-voltage components must be identified by a red warning sticker.*

DANGER!

High voltage can cause fatal injury.

Danger of severe or fatal injuries from electric shock.

- *The high-voltage system may only be re-energised by a suitably qualified person (Audi high-voltage technician).*
- *The system may only be re-energised using the vehicle diagnostic tester via “Guided Fault Finding”.*
- *The vehicle is then made ready for operation again by the qualified person (Audi high-voltage technician).*
- *The qualified person (Audi high-voltage technician) marks the vehicle by attaching the appropriate warning signs.*

DANGER!

High voltage can cause fatal injury.

Danger of severe or fatal injuries from electric shock.

- *The high-voltage system may only be de-energised by a suitably qualified person (Audi high-voltage technician).*
- *It must be definitely confirmed that the high-voltage system is de-energised. The system may only be de-energised using the vehicle diagnostic tester via "Guided Fault Finding".*
- *The qualified person (Audi high-voltage technician) confirms that the system is de-energised and ensures that it cannot be re-energised by fitting the locking cap - T40262- and by storing the ignition key and the maintenance connector for high-voltage system - TW - in a safe place.*
- *The qualified person (Audi high-voltage technician) marks the vehicle by attaching the appropriate warning signs.*

Note

Please refer to the Electronic parts catalogue when ordering replacement parts.

WARNING

Accidents can be caused if the driver is distracted by test equipment while road-testing, or if test equipment is not properly secured.

Injuries can be caused if the passenger's airbag is triggered in a collision.

- *The use of test equipment while driving causes distraction.*
- *There is an increased risk of injury if test equipment is not secured.*
- *Move the front passenger's seat back as far as it will go.*
- *Use only the vehicle diagnostic and service information system - VAS 5052- or the diagnostic system - VAS 5053- .*
- *The test equipment -1- must rest flat on the passenger's thighs (as shown in illustration) and must be operated by the passenger.*

10.2 Tools

Special tools and workshop equipment required

- Electric cutter - V.A.G 1561 A-

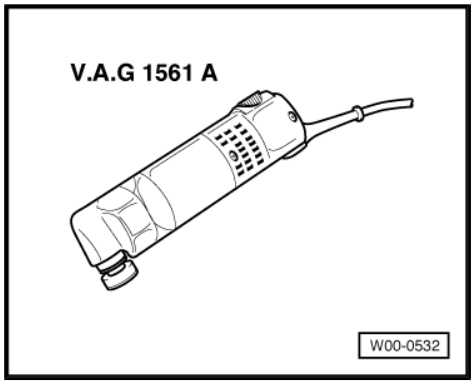

- Blade, offset - V.A.G 1561/10-

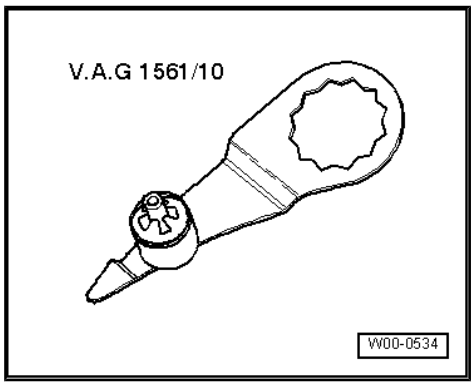

- Scraper (15 + 25 mm) - V.A.G 1561/7+8-

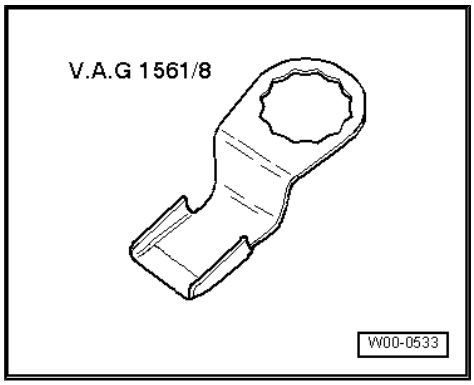

- Double cartridge gun - VAS 5237-

10.3 Procedure

Removing

– Remove screws and separate joints -a-.

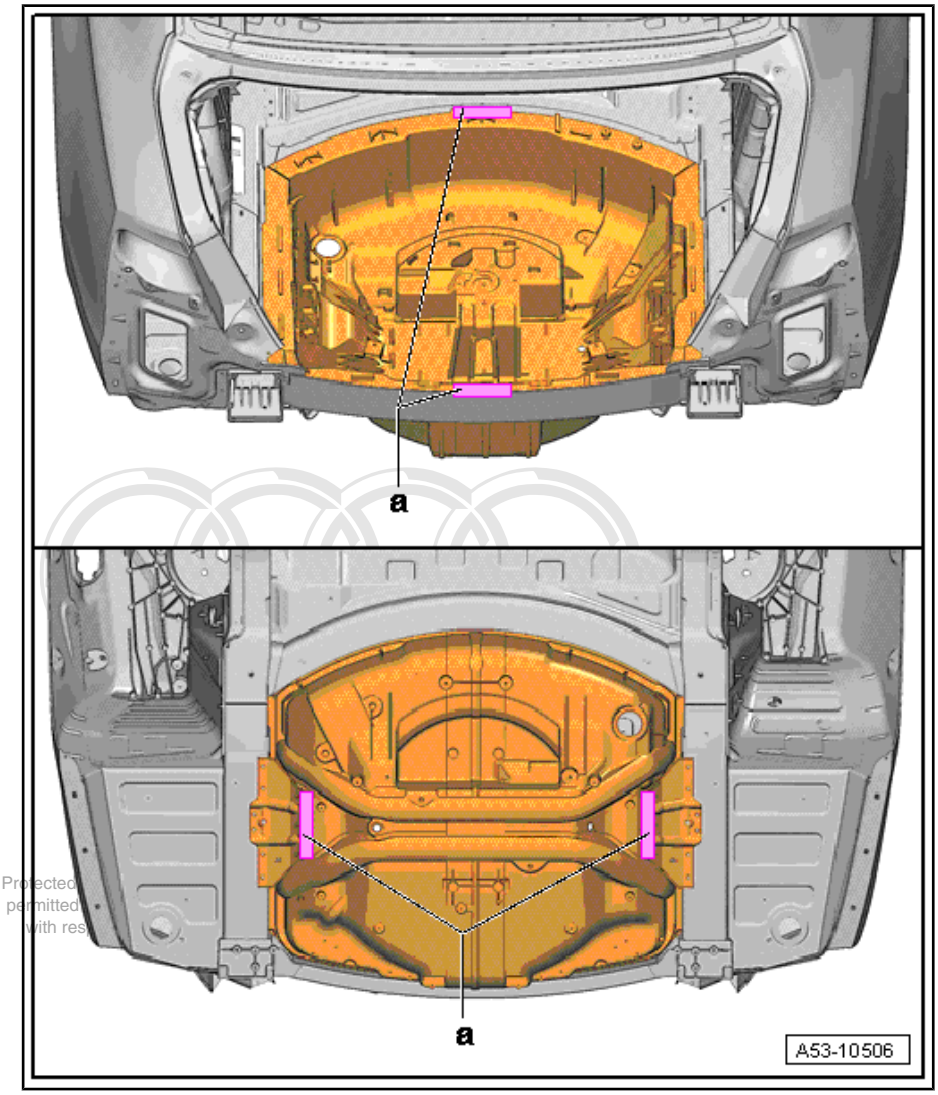

– Cut through adhesive bead all round using electric cutter - V.A.G 1561 A- .

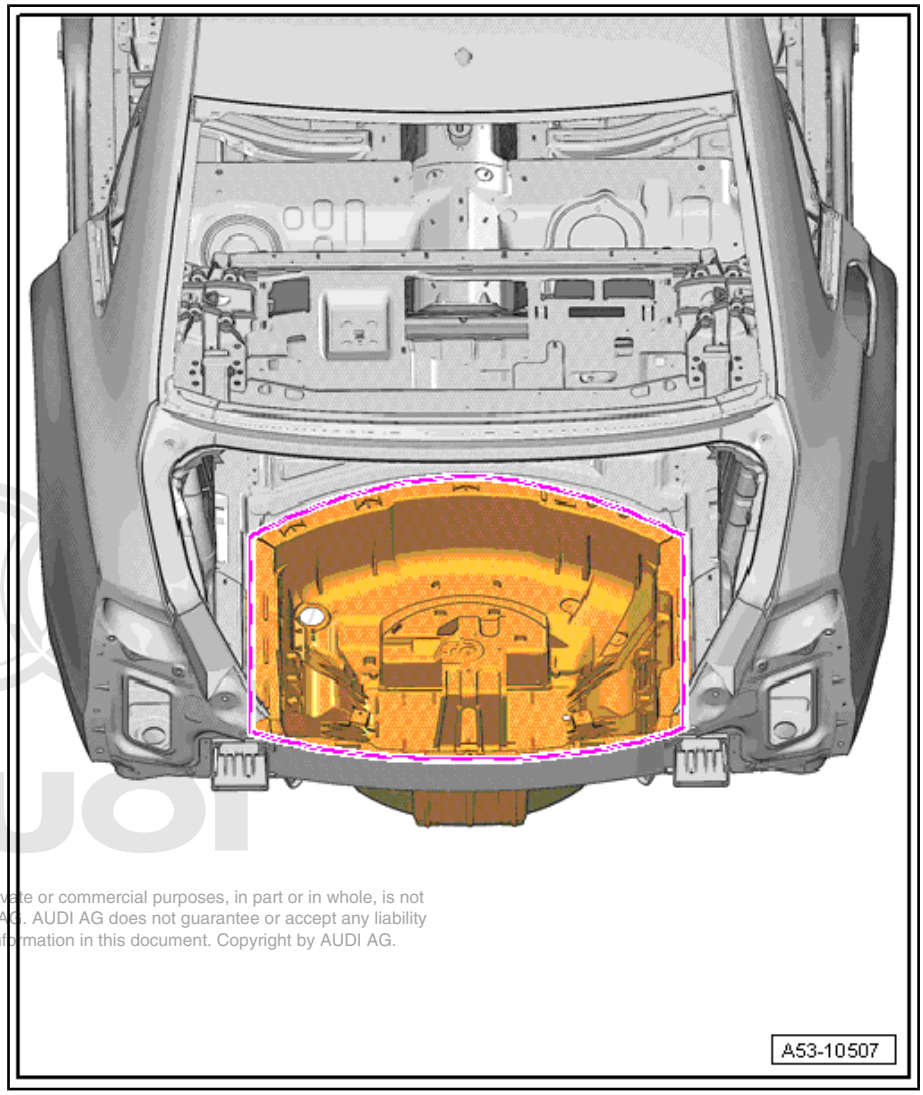

– Cut back adhesive bead using electric cutter - V.A.G 1561 A- , but do not remove all remaining material.

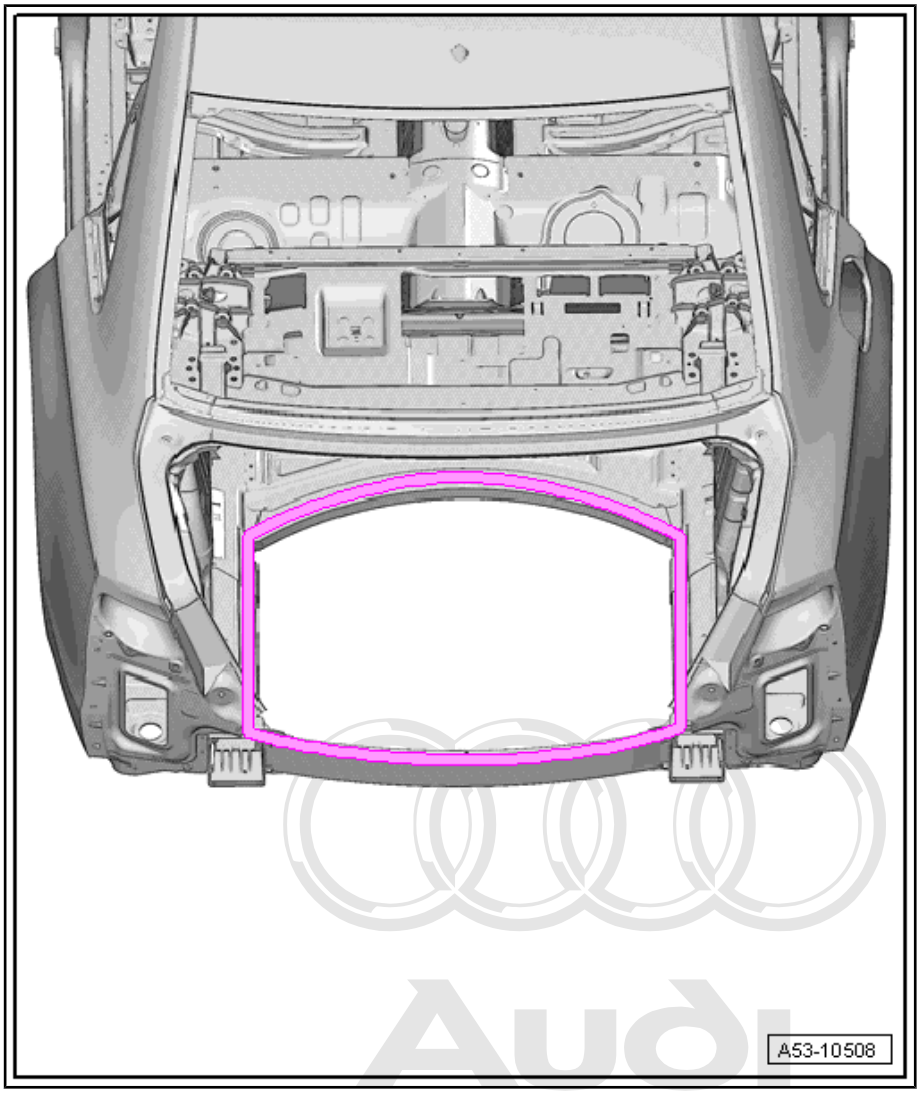

Replacement parts

- Spare wheel well
- 2-component window adhesive set - DA 004 660 M2-
- Cleaning solution - D 009 401 04- . Observe safety precautions when handling.

Preparing new part

– Clean bonding surface on spare wheel well with cleaning solution - D 009 401 04- .

Installing

Caution

- *Bonding surface must be free of dirt and grease.*
- *Do not cut back bonding surface until immediately before installation.*
- *Do not apply primer to bonding surface or treat with cleaning solution.*

Note

The cross-section of the adhesive bead is determined by the size of the applicator nozzle opening and the rate of application.

Dimensions for adhesive application:

1 - Adhesive bead

2 - Old adhesive bead

3 - Spare wheel well

- Dimension -a- = 8 mm
- Dimension -b- = 12 mm
- Dimension -c-: note variations in spacing from contact surface.

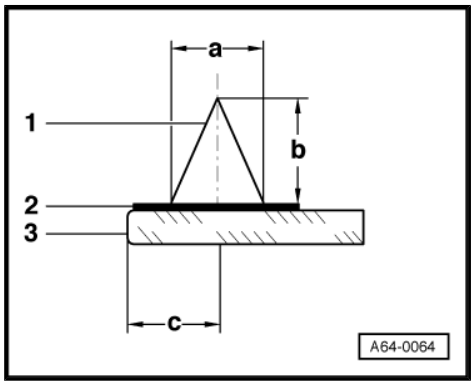

– Apply nozzle -2- so it is in full contact with bonding surface.

- Adhesive bead -1- is applied in direction indicated by -arrow-.

– Apply adhesive/sealant -1- all round bonding surface -2-.

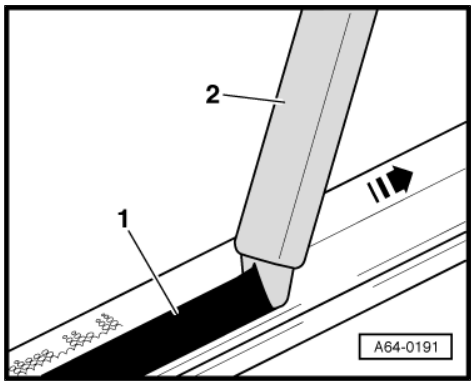

– Apply 2-component window adhesive set - DA 004 660 M2- using double cartridge gun - VAS 5237- .

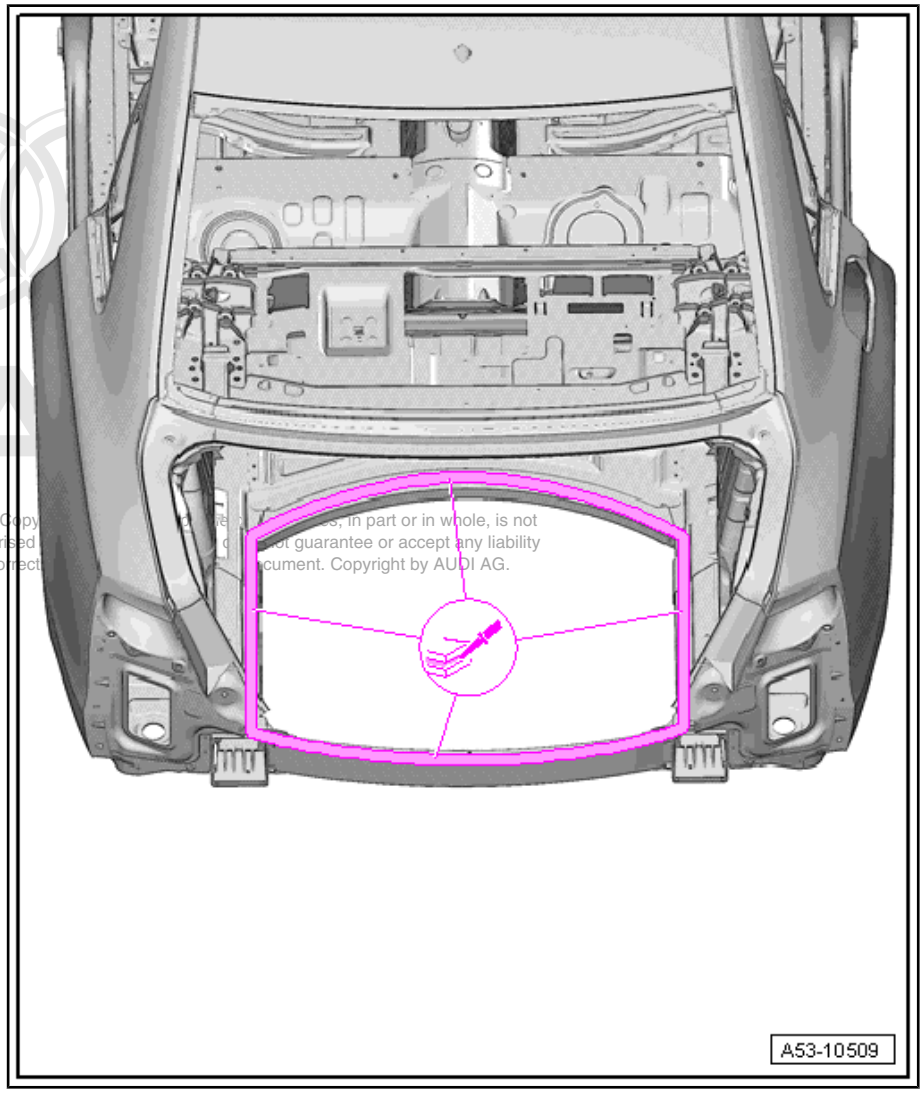

– Fit screws and secure original joints -a-.

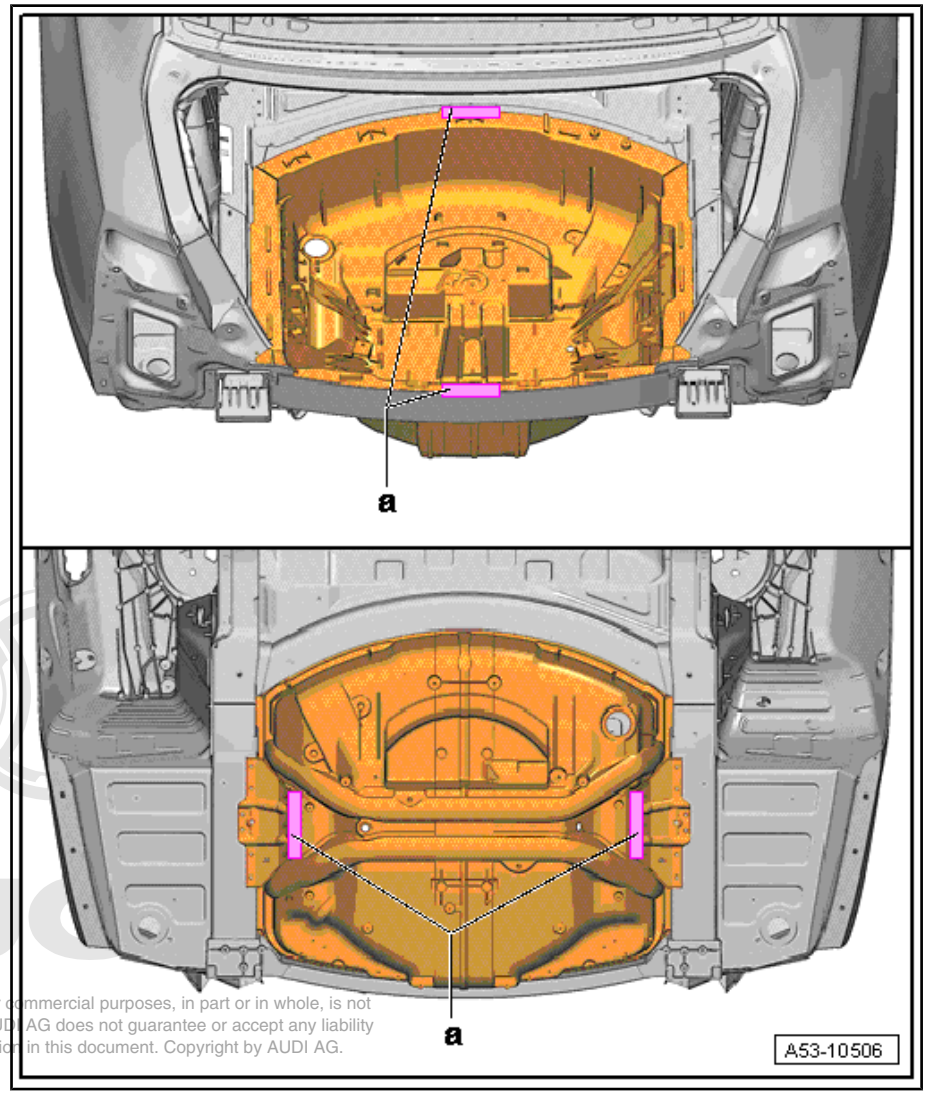

Bonding area:

– If the bonding area has been damaged, the paint finish must be repaired and corrosion protection applied as required.

Note

- *After bonding has been completed, the vehicle must be left standing on a level surface for 3 hours at room temperature (min. 15 °C) so that the adhesive components can harden (curing time).*
- *Do not move the vehicle until the "curing time" has elapsed.*