Workshop Manual

Audi A8 1994 ➤

Automatic gearbox 01V, front-wheel drive and four-wheel drive

Edition 11.2005

Protected by copyright. Copying for private or commercial purposes, in part or in whole, is not permitted unless authorised by AUDI AG. AUDI AG does not guarantee or accept any liability with respect to the correctness of information in this document. Copyright by AUDI AG.

List of Workshop Manual Repair GroupsList of Workshop Manual Repair GroupsList of Workshop Manual Repair Groups

Repair Group

00 - Technical data
32 - Torque converter
37 - Controls, housing
38 - Gears, control
39 - Final drive - rear differential
39 - Final drive - front differential

Technical information should always be available to the foremen and mechanics, because their careful and constant adherence to the instructions is essential to ensure vehicle road-worthiness and safety. In addition, the normal basic safety precautions for working on motor vehicles must, as a matter of course, be observed.

Protected by copyright. Copying for private or commercial purposes, in part or in whole, is not permitted unless authorised by AUDI AG. AUDI AG does not guarantee or assume liability for such copy or the correctness of its content or the availability thereof.

All rights reserved.
No reproduction without prior agreement from publisher.

Copyright © 2010 Audi AG, Ingolstadt

Contents

00 - Technical data . . . 1

1 **Gearbox, front final drive, transfer box** . . . 1
1.1 Gearbox identification . . . 1
1.2 Notes on 5-speed automatic gearbox 01V . . . 1
1.3 Gearbox (front-wheel drive) - code letters, gearbox allocation, ratios, equipment . . . 2
1.4 Gearbox (four-wheel drive) - code letters, gearbox allocation, ratios, equipment . . . 4
2 **Rear final drive** . . . 8
2.1 Rear final drive identification . . . 8
2.2 Code letters, ratios . . . 8
3 **Capacities** . . . 10
3.1 Planetary gearbox . . . 10
3.2 Front final drive . . . 10
3.3 Transfer box . . . 10
3.4 Rear final drive . . . 11
4 **Notes on tow-starting and towing** . . . 12
5 **Transmission layout** . . . 13
5.1 Gearbox diagram for vehicles with front-wheel drive . . . 13
5.2 Gearbox diagram for vehicles with four-wheel drive . . . 14
5.3 Actuation of selector elements . . . 14
6 **Repair instructions** . . . 16
6.1 Contact corrosion! . . . 16
6.2 General repair instructions . . . 16
7 **Rules for cleanliness when working on the automatic gearbox** . . . 19

32 - Torque converter . . . 20

1 **Torque converter** . . . 20
1.1 Identification of torque converter . . . 21
1.2 Draining torque converter . . . 21
1.3 Renewing oil seal for torque converter . . . 21
1.4 Checking torque converter . . . 23
1.5 Installing torque converter . . . 23

37 - Controls, housing . . . 25

1 **Servicing selector mechanism** . . . 25
1.1 Checking ignition key removal lock . . . 25
1.2 Checking selector mechanism . . . 25
1.3 Dismantling and assembling selector mechanism . . . 26
1.4 Removing and installing selector lever cable . . . 32
1.5 Checking and adjusting selector lever cable . . . 35
1.6 Removing and installing locking cable . . . 37
1.7 Adjusting locking cable . . . 38
2 **Removing and installing gearbox** . . . 40
2.1 Removing gearbox - vehicles with 6-cylinder petrol engine . . . 40
2.2 Removing gearbox - vehicles with 8-cylinder engine . . . 49
2.3 Removing gearbox - vehicles with 6-cylinder TDI engine . . . 59
2.4 Installing gearbox - all vehicles . . . 67
2.5 Transporting the automatic gearbox . . . 70
2.6 Securing gearbox to assembly stand . . . 72
2.7 Removing and installing gearbox support (left and right) . . . 73
3 **ATF in planetary gearbox** . . . 76
3.1 Checking and topping up ATF level in planetary gearbox . . . 76
3.2 Checking ATF level - vehicles with auxiliary ATF cooler . . . 80

Protected by copyright. Copying for private or commercial purposes, in part or in whole, is not permitted unless authorised by AUDI AG. AUDI AG does not guarantee or accept any liability with respect to the correctness of information in this document. Copyright by AUDI AG.

3.3 Draining ATF and filling up after repairs . . . 83
4 ATF pipes and auxiliary ATF cooler . . . 87
4.1 ATF pipes (6-cylinder petrol engines) - exploded view of components . . . 87
4.2 ATF pipes (8-cylinder engines) - exploded view of components . . . 88
4.3 ATF pipes (6-cylinder TDI engines) - exploded view of components . . . 89
4.4 Auxiliary ATF cooler - exploded view of components . . . 90
4.5 Removing and installing ATF pipes . . . 90
4.6 Cleaning ATF pipes and ATF cooler . . . 91

38 - Gears, control . . . 93
1 Removing and installing ATF oil pan, ATF strainer and valve body . . . 93
1.1 Different hydraulic control systems . . . 93
1.2 Gearbox with hydraulic control type “E17” - exploded view of components . . . 94
1.3 Gearbox with hydraulic control type “E18/2” - exploded view of components . . . 96
1.4 Removing and installing ATF oil pan . . . 98
1.5 Removing and installing ATF strainer . . . 100
1.6 Removing and installing valve body . . . 100
1.7 Removing and installing internal oil pipe . . . 100
1.8 Removing and installing multi-function switch F125 . . . 101
1.9 Removing and installing gearbox speed sender G38 / gearbox output speed sender G195 . . . 101
1.10 Removing and installing speedometer sender G22 . . . 102
1.11 Removing and installing gearbox input speed sender G182 . . . 102
1.12 Removing and installing wiring harness in gearbox . . . 102
1.13 Removing and installing gearbox oil temperature sender G93 . . . 103
1.14 Renewing oil seal for selector shaft . . . 103
1.15 Removing and installing housing for ATF supply unit (gearbox not dismantled) . . . 104

39 - Final drive - rear differential . . . 105
1 Gear oil in rear final drive . . . 105
1.1 Checking gear oil in rear final drive . . . 105
2 Servicing rear final drive . . . 106
2.1 Renewing oil seal on flange for propshaft . . . 106
2.2 Measuring and marking radial run-out at flange for propshaft . . . 111
2.3 Removing and installing rear final drive . . . 112
2.4 Securing rear final drive to assembly stand . . . 116
2.5 Renewing oil seals for flange shafts . . . 117
3 Dismantling and assembling rear final drive . . . 119
3.1 Rear final drive - overview of components . . . 119
3.2 Differential - exploded view of components . . . 120
3.3 Dismantling and assembling differential . . . 123
3.4 Removing and installing pinion shaft; dismantling and assembling pinion shaft . . . 131
3.5 Adjusting pinion shaft and crown wheel . . . 140
3.6 Adjusting pinion shaft . . . 143
3.7 Adjusting crown wheel . . . 148

Protected by copyright. Copying for private or commercial purposes, in part or in whole, is not permitted unless authorised by AUDI AG. AUDI AG does not guarantee or accept any liability with respect to the correctness of information in this document. Copyright by AUDI AG.

39 - Final drive - front differential . . . 155
1 Gear oil in front final drive . . . 155
1.1 Checking gear oil level in front final drive . . . 155
1.2 Filling up gear oil in front final drive after repairs . . . 156
2 Servicing front final drive . . . 158
2.1 Front final drive - exploded view of components . . . 158
2.2 Removing and installing flange shaft (left-side) . . . 159
2.3 Removing and installing flange shaft (right-side) . . . 161
2.4 Renewing oil seal and grooved ball bearing for flange shaft (left-side) . . . 163

2.5 Renewing oil seal for flange shaft (right-side) 166
2.6 Removing and installing cover for front axle drive 167
2.7 Removing and installing intermediate flange for front axle drive 169
2.8 Renewing twin-lip oil seal between final drive and gearbox housing 171
2.9 Removing and installing cover for final drive 174

3 Gear oil in transfer box 177
3.1 Checking gear oil level in transfer box 177
3.2 Changing gear oil in transfer box and filling up after repairs 178

4 Servicing front axle drive and transfer box 181
4.1 Removing and installing transfer box with Torsen differential 181
4.2 Dismantling and assembling front axle drive and transfer box 182
4.3 Renewing oil seal for output flange for propshaft 182
4.4 Renewing oil seal in intermediate flange for front axle drive 184
4.5 Renewing oil seal in input pinion 184
4.6 Renewing needle bearing for spur gear 2 184

5 Servicing propshaft 185
5.1 Propshaft - exploded view of components 186
5.2 Removing and installing propshaft 186
5.3 Adjusting propshaft 190

Protected by copyright. Copying for private or commercial purposes, in part or in whole, is not permitted unless authorised by AUDI AG. AUDI AG does not guarantee or accept any liability with respect to the correctness of information in this document. Copyright by AUDI AG.

Protected by copyright. Copying for private or commercial purposes, in part or in whole, is not permitted unless authorised by AUDI AG. AUDI AG does not guarantee or accept any liability with respect to the correctness of information in this document. Copyright by AUDI AG.

00 – Technical data

1 Gearbox, front final drive, transfer box

The “5-speed automatic gearbox 01V” is installed in conjunction with 6-cylinder and 8-cylinder engines in the Audi A8 1994 ‣. Allocation ⇒ page 2 .

1.1 Gearbox identification

Location of code letters on gearbox

- The gearbox code letters are given on the identification plate on the underside of the gearbox -arrow-.
- Another identification plate (identical to the first one) can be found on the side of the gearbox. This is not accessible when the gearbox is in its installed position.

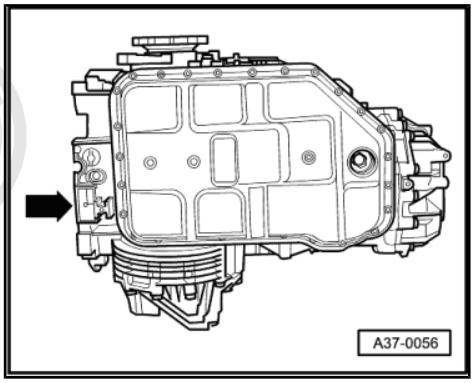

The identification plate lists the following information:

- -Arrow 1- gearbox serial number
- -Arrow 2- gearbox designation (5HP19 in this example)
- -Arrow 3- code letters (DRF in this example)

Protected by copyright. Copying for private or commercial purposes, in part or in whole, is not permitted unless authorised by AUDI AG. AUDI AG does not guarantee or accept any liability with respect to the correctness of information in this document. Copyright by AUDI AG.

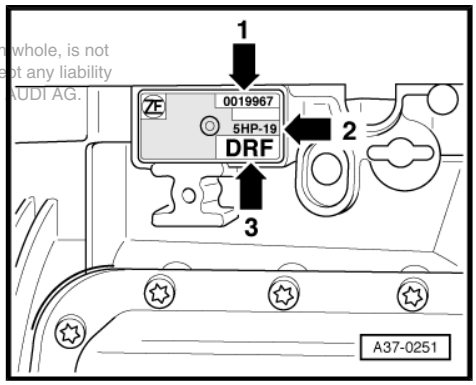

Note

The code letters for the gearbox are also given on the vehicle data stickers.

1.2 Notes on 5-speed automatic gearbox 01V

Detailed information on the basic principle of this gearbox ⇒ Self-study programme No. 180 ; 5-speed automatic gearbox 01V .

Gearbox

The 5-speed automatic gearbox 01V has five hydraulically activated forward gears. When the torque converter lock-up clutch is closed these forward gears become mechanically driven gears by cutting out the torque converter slip.

Torque converter

The torque converter is equipped with a lock-up clutch. The engagement of the torque converter lock-up clutch is controlled according to engine load and speed and produces very little vibration. The lock-up clutch drives 3rd, 4th and 5th gears mechanically without slip.

Hydraulic control

A distinction is made between two types of gearbox:

- Gearbox with hydraulic control type “E17”, in which the gearbox input speed sender -G182- (inductive sender) is attached to the underside of the valve body.
- Gearbox with hydraulic control type “E18/2”, in which the gearbox input speed sender -G182- (Hall sender) is attached to the gearbox housing behind the valve body.

The tables ⇒ page 2 indicate which type of gearbox is installed.

Self-diagnosis

Before performing service work on the automatic gearbox, trace the cause of the fault as exactly as possible ⇒ Automatic gearbox 01V, self-diagnosis; Rep. Gr. 01 .

1.3 Gearbox (front-wheel drive) - code letters, gearbox allocation, ratios, equipment

Automatic gearbox			01V.C	01V.F	01V.B
Gearbox	Code letters		CJX	CJY	CJZ
	Manufactured	from to	06.97 09.02	04.96 12.98	07.95 12.98
Torque converter	Code letters		K36	N28	J28
Valve body			Select correct version according to gearbox code letters ⇒ Electronic parts catalogue		
Allocation	Model		Audi A8 1994 ▸	Audi A8 1994 ▸	Audi A8 1994 ▸
	Engine		2.5 ltr. TDI -110 kW	2.8 ltr. 5V - 142 kW	3.7 ltr. 4V -169 kW
Ratios	1st gear		3.665	3.665	3.665
	2nd gear		1.999	1.999	1.999
	3rd gear		1.407	1.407	1.407
	4th gear		1.000	1.000	1.000
	5th gear		0.742	0.742	0.742
	Reverse gear		4.096	4.096	4.096
Intermediate drive to front axle	No. of teeth	Driving gear	29	29	29
		Output gear	29	35	9
	Ratio		1.000	1.207	1.000
Front final drive	No. of teeth	Pinion shaft	11	11	11
		Crown wheel	32	30	34
	Ratio		2.909	2.727	3.091
CAN bus			No	No	No
Electronic throttle			No	No	No
Hydraulic control			E17	E17	E17
Auxiliary ATF cooler			No	No	No

Protected by copyright. Copying for private or commercial purposes, in part or in whole, is not permitted unless authorised by AUDI AG. AUDI AG does not guarantee or accept any liability with respect to the correctness of information in this document. Copyright by AUDI AG.

Automatic gearbox			01V.F	01V.F	01V.B
Gearbox	Code letters		DRD	EBX	ECJ
	Manufactured	from to	08.97 12.98	01.99 02.01	10.98 02.01
Torque converter	Code letters		F31	F31	F34

Automatic gearbox			01V.F	01V.F	01V.B
Valve body			Select correct version according to gearbox code letters ⇒ Electronic parts catalogue		
Allocation	Model		Audi A8 1994 ▸	Audi A8 1994 ▸	Audi A8 1994 ▸
	Engine		2.8 ltr. 5V - 142 kW	2.8 ltr. 5V - 142 kW	3.7 ltr. 5V -191 kW
Ratios	1st gear		3.665	3.665	3.665
	2nd gear		1.999	1.999	1.999
	3rd gear		1.407	1.407	1.407
	4th gear		1.000	1.000	1.000
	5th gear		0.742	0.742	0.742
	Reverse gear		4.096	4.096	4.096
Intermediate drive to front axle	No. of teeth	Driving gear	29	29	29
		Output gear	35	35	29
	Ratio		1.207	1.207	1.000
Front final drive	No. of teeth	Pinion shaft	11	11	11
		Crown wheel	30	30	34
	Ratio		2.727	2.727	3.091
CAN bus			Yes	Yes	No
Electronic throttle			No	Yes	Yes
Hydraulic control			E17	E18/2	E18/2
Auxiliary ATF cooler			No	No	Yes

Protected by copyright. Copying for private or commercial purposes, in part or in whole, is not permitted unless authorised by AUDI AG. AUDI AG does not guarantee or accept any liability with respect to the correctness of information in this document. Copyright by AUDI AG.

Automatic gearbox			01V.E	01V.C	01V.E
Gearbox	Code letters		ETL	ETW	FAH
	Manufac-tured	from to	04.00 05.00	08.99 11.99	05.00 09.02
Torque converter	Code letters		Q45	B45	B56
Valve body			Select correct version according to gearbox code letters ⇒ Electronic parts catalogue		
Allocation	Model		Audi A8 1994 ▸	Audi A8 1994 ▸	Audi A8 1994 ▸
	Engine		2.5 ltr. TDI -132 kW	2.5 ltr. TDI -110 kW	2.5 ltr. TDI -132 kW
Ratios	1st gear		3.665	3.665	3.665
	2nd gear		1.999	1.999	1.999
	3rd gear		1.407	1.407	1.407
	4th gear		1.000	1.000	1.000
	5th gear		0.742	0.742	0.742
	Reverse gear		4.096	4.096	4.096
Intermediate drive to front axle	No. of teeth	Driving gear	29	29	29
		Output gear	34	29	34
	Ratio		1.172	1.000	1.172
Front final drive	No. of teeth	Pinion shaft	11	11	11

Automatic gearbox			01V.E	01V.C	01V.E
		Crown wheel	30	32	30
	Ratio		2.727	2.909	2.727
CAN bus			No	No	No
Electronic throttle			Yes	Yes	Yes
Hydraulic control			E18/2	E17	E18/2
Auxiliary ATF cooler			Yes	No	Yes

Automatic gearbox			01V.E	01V.C	01V.E
Gearbox	Code letters		FAJ	FAK	FEE
	Manufac-tured	from to	05.00 09.02	05.00 09.02	11.99 03.00
Torque converter	Code letters		F31	G35	B45
Valve body			Select correct version according to gearbox code letters ⇒ Electronic parts catalogue		
Allocation	Model		Audi A8 1994 ▸	Audi A8 1994 ▸	Audi A8 1994 ▸
	Engine		2.8 ltr. 5V - 142 kW	3.7 ltr. 5V -191 kW	2.5 ltr. TDI -132 kW
Ratios	1st gear		3.665	3.665	3.665
	2nd gear		1.999	1.999	1.999
	3rd gear		1.407	1.407	1.407
	4th gear		1.000	1.000	1.000
	5th gear		0.742	0.742	0.742
	Reverse gear		4.096	4.096	4.096
Intermediate drive to front axle	No. of teeth	Driving gear	29	29	29
		Output gear	35	29	34
	Ratio		1.207	1.000	1.172
Front final drive	No. of teeth	Pinion shaft	11	11	11
		Crown wheel	30	34	30
	Ratio		2.727	3.091	2.727
CAN bus			Yes	No	No
Electronic throttle			Yes	Yes	Yes
Hydraulic control			E18/2	E18/2	E18/2
Auxiliary ATF cooler			No	Yes	Yes

Protected by copyright. Copying for private or commercial purposes, in part or in whole, is not permitted unless authorised by AUDI AG. AUDI AG does not guarantee or accept any liability with respect to the correctness of information in this document. Copyright by AUDI AG.

1.4 Gearbox (four-wheel drive) - code letters, gearbox allocation, ratios, equipment

Automatic gearbox			01V.3	01V.2	01V.2
Gearbox	Code letters		CJS	CJT	DEY
	Manufac-tured	from to	07.96 09.98	04.97 12.98	06.97 12.98
Torque converter	Code letters		N28	J28	K36

Automatic gearbox			01V.3	01V.2	01V.2
Valve body			Select correct version according to gearbox code letters ⇒ Electronic parts catalogue		
Allocation	Model		Audi A8 1994 ▸	Audi A8 1994 ▸	Audi A8 1994 ▸
	Engine		2.8 ltr. 5V - 142 kW	3.7 ltr. 4V -169 kW	2.5 ltr. TDI -110 kW
Ratios	1st gear		3.665	3.665	3.665
	2nd gear		1.999	1.999	1.999
	3rd gear		1.407	1.407	1.407
	4th gear		1.000	1.000	1.000
	5th gear		0.742	0.742	0.742
	Reverse gear		4.096	4.096	4.096
Intermediate drive to front axle	No. of teeth	Driving gear	29	29	29
		Output gear	35	29	29
	Ratio		1.207	1.000	1.000
Front final drive	No. of teeth	Pinion shaft	11	11	11
		Crown wheel	30	34	34
	Ratio		2.727	3.091	3.091
Intermediate drive to rear axle	No. of teeth	Driving gear	41	43	43
		Output gear	33	34	34
	Ratio		0.805	0.791	0.791
CAN bus			No	No	No
Electronic throttle			No	No	Yes
Hydraulic control			E17	E17	E17
Auxiliary ATF cooler			No	No	No

Protected by copyright. Copying for private or commercial purposes, in part or in whole, is not permitted unless authorized by AUDI AG. AUDI AG does not guarantee or assume any liability with respect to the correctness of information in this document. Copyright by AUDI AG.

Automatic gearbox			01V.3	01V.3	01V.2
Gearbox	Code letters		DRN	ECG	ECH
	Manufac- tured	from to	08.97 12.98	01.99 04.00	10.98 02.01
Torque converter	Code letters		F31	F31	F34
Valve body			Select correct version according to gearbox code letters ⇒ Electronic parts catalogue		
Allocation	Model		Audi A8 1994 ▸	Audi A8 1994 ▸	Audi A8 1994 ▸
	Engine		2.8 ltr. 5V - 142 kW	2.8 ltr. 5V - 142 kW	3.7 ltr. 5V -191 kW
Ratios	1st gear		3.665	3.665	3.665
	2nd gear		1.999	1.999	1.999
	3rd gear		1.407	1.407	1.407
	4th gear		1.000	1.000	1.000
	5th gear		0.742	0.742	0.742
	Reverse gear		4.096	4.096	4.096
Intermediate drive to front axle	No. of teeth	Driving gear	29	29	29

Automatic gearbox			01V.3	01V.3	01V.2
		Output gear	35	35	29
	Ratio		1.207	1.207	1.000
Front final drive	No. of teeth	Pinion shaft	11	11	11
		Crown wheel	30	30	34
	Ratio		2.727	2.727	3.091
Intermediate drive to rear axle	No. of teeth	Driving gear	41	41	43
		Output gear	33	33	34
	Ratio		0.805	0.805	0.791
CAN bus			Yes	Yes	No
Electronic throttle			No	Yes	Yes
Hydraulic control			E17	18/2	18/2
Auxiliary ATF cooler			No	No	Yes

Protected by copyright. Copying for private or commercial purposes, in part or in whole, is not permitted unless authorised by AUDI AG. AUDI AG does not guarantee or accept any liability with respect to the correctness of information in this document. Copyright by AUDI AG.

Automatic gearbox			01V.1	01V.2	01V.1
Gearbox	Code letters		ETN	ETX	FAZ
	Manufac-tured	from to	11.99 02.00	10.99 06.00	05.00 09.02
Torque converter	Code letters		Q45	B45	B56
Valve body			Select correct version according to gearbox code letters ⇒ Electronic parts catalogue		
Allocation	Model		Audi A8 1994 ‣	Audi A8 1994 ‣	Audi A8 1994 ‣
	Engine		2.5 ltr. TDI -132 kW	2.5 ltr. TDI -110 kW	2.5 ltr. TDI -132 kW
Ratios	1st gear		3.665	3.665	3.665
	2nd gear		1.999	1.999	1.999
	3rd gear		1.407	1.407	1.407
	4th gear		1.000	1.000	1.000
	5th gear		0.742	0.742	0.742
	Reverse gear		4.096	4.096	4.096
Intermediate drive to front axle	No. of teeth	Driving gear	29	29	29
		Output gear	34	29	34
	Ratio		1.172	1.000	1.172
Front final drive	No. of teeth	Pinion shaft	11	11	11
		Crown wheel	30	34	30
	Ratio		2.727	3.091	2.727
Intermediate drive to rear axle	No. of teeth	Driving gear	40	43	40
		Output gear	31	34	31
	Ratio		0.775	0.791	0.775
CAN bus			No	No	No
Electronic throttle			Yes	Yes	Yes
Hydraulic control			18/2	E17	E18/2

Automatic gearbox	01V.1	01V.2	01V.1
Auxiliary ATF cooler	Yes	No	Yes

Automatic gearbox			01V.3	01V.2	01V.1
Gearbox	Code letters		FBA	FBB	FEG
	Manufac-tured	from to	05.00 09.02	05.00 09.02	03.00 05.00
Torque converter	Code letters		F31	G35	B45
Valve body			Select correct version according to gearbox code letters ⇒ Electronic parts catalogue		
Allocation	Model		Audi A8 1994 ▸	Audi A8 1994 ▸	Audi A8 1994 ▸
	Engine		2.8 ltr. 5V - 142 kW	3.7 ltr. 5V -191 kW	2.5 ltr. TDI -132 kW
Ratios	1st gear		3.665	3.665	3.665
	2nd gear		1.999	1.999	1.999
	3rd gear		1.407	1.407	1.407
	4th gear		1.000	1.000	1.000
	5th gear		0.742	0.742	0.742
	Reverse gear		4.096	4.096	4.096
Intermediate drive to front axle	No. of teeth	Driving gear	29	29	29
		Output gear	35	29	34
	Ratio		1.207	1.000	1.172
Front final drive	No. of teeth	Pinion shaft	11	11	11
		Crown wheel	30	34	30
	Ratio		2.727	3.091	2.727
Intermediate drive to rear axle	No. of teeth	Driving gear	41	43	40
		Output gear	33	34	31
	Ratio		0.805	0.791	0.775
CAN bus			Yes	No	No
Electronic throttle			Yes	Yes	Yes
Hydraulic control			E18/2	E18/2	E18/2
Auxiliary ATF cooler			No	Yes	Yes

Protected by copyright. Copying for private or commercial purposes, in part or in whole, is not permitted unless authorised by AUDI AG. AUDI AG does not guarantee or accept any liability with respect to the correctness of information in this document. Copyright by AUDI AG.

2 Rear final drive

Final drive unit 01R is installed in conjuction with four-wheel drive automatic gearbox 01V. For correct version, refer to ⇒ Electronic parts catalogue .

2.1 Rear final drive identification

Location of code letters on rear final drive

Code letters and date of manufacture for rear final drive

Example:	DSA	24	03	8
	Code letters	Day	Month	Year of manufacture (1998)

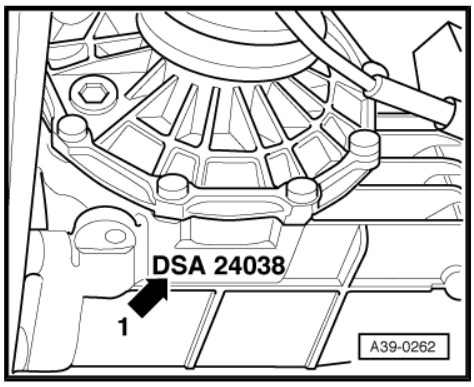

Note

The rear final drive code letters can also be found on the vehicle data stickers.

2.2 Code letters, ratios

Rear final drive		01R.1	01R.1	01R.2
Code letters		CGV	DNU	DNV
Manufactured	from to	07.96 01.97	04.97 12.98	04.97 12.98
Allocation	Model Engine	Audi A8 1994 ▸ 2.8 ltr. 5V - 142 kW	Audi A8 1994 ▸ 2.8 ltr. 5V - 142 kW	Audi A8 1994 ▸ 3.7 ltr. 4V -169 kW 2.5 ltr. TDI -110 kW
Ratio	Final drive	37 : 9 = 4.111	37 : 9 = 4.111	35 : 9 = 3.889
Drive shaft flange ∅		108 mm	108 mm	108 mm

Protected by copyright. Copying for private or commercial purposes, in part or in whole, is not permitted unless authorised by AUDI AG. AUDI AG does not guarantee or accept any liability with respect to the correctness of information in this document. Copyright by AUDI AG.

Rear final drive		01R.3	01R.4	01R.4
Code letters		DSA	DUP	EUT
Manufactured	from to	01.99 07.99	10.98 04.00	07.99 09.02
Allocation	Model Engine	Audi A8 1994 ▸ 2.8 ltr. 5V - 142 kW	Audi A8 1994 ▸ 3.7 ltr. 5V -191 kW 2.5 ltr. TDI -110 kW	Audi A8 1994 ▸ 3.7 ltr. 5V -191 kW 2.5 ltr. TDI -110 kW
Ratio	Final drive	37 : 9 = 4.111	35 : 9 = 3.889	35 : 9 = 3.889
Drive shaft flange ∅		108 mm	108 mm	108 mm

Rear final drive		01R.3		
Code letters		EUU		
Manufactured	from to	01.99 09.02		
Allocation	Model Engine	Audi A8 1994 ▸ 2.8 ltr. 5V -142 kW 2.5 ltr. TDI -132 kW		
Ratio	Final drive	37 : 9 = 4.111		
Drive shaft flange ∅		108 mm		

Protected by copyright. Copying for private or commercial purposes, in part or in whole, is not permitted unless authorised by AUDI AG. AUDI AG does not guarantee or accept any liability with respect to the correctness of information in this document. Copyright by AUDI AG.

3 Capacities

3.1 Planetary gearbox

Capacities	Planetary gearbox	Automatic gearbox
Initial filling	9.0 ltr.	01V
Oil change	No change 1)	
Lubricant	ATF	
• 1) Lifetime filling: change only after repair, if oil pan is removed (approx. 2.6 ltr. to 3.0 ltr.).		

ATF is available as a replacement part (also referred to as VW ATF).

- 0.5 ltr. - Part No. -G 052 162 A1-
- 1.0 ltr. - Part No. -G 052 162 A2-
- 20 ltr. - Part No. -G 052 162 A6-

Checking and topping up ATF level in planetary gearbox ⇒ page 76 .

3.2 Front final drive

Capacities	Front final drive	Automatic gearbox
Initial filling	0.85 ltr.	01V
Oil change	No change 1)	
Lubricant	Gear oil SAE 75W90	
• 1) Lifetime filling, change only after performing repair work.		

Protected by copyright. Copying for private or commercial purposes, in part or in whole, is not permitted unless authorised by AUDI AG. AUDI AG does not guarantee or accept any liability with respect to the correctness of information in this document. Copyright by AUDI AG.

The gear oil SAE 75W90 (synthetic oil) is available as a replacement part.

- 0.5 ltr. - Part No. -G 052 145 A1-
- 1.0 ltr. - Part No. -G 052 145 S2-

Checking oil level in front final drive ⇒ page 155 .

3.3 Transfer box

Capacities	Transfer box	Automatic gearbox
Initial filling	0.8 ltr.	01V
Oil change	No change 1)	
Lubricant	Gear oil SAE 75W90	
• 1) Lifetime filling, change only after performing repair work.		

The gear oil SAE 75W90 (synthetic oil) is available as a replacement part.

- 0.5 ltr. - Part No. -G 052 145 A1-
- 1.0 ltr. - Part No. -G 052 145 S2-

Checking gear oil level in transfer box ⇒ page 177 .

3.4 Rear final drive

Capacities	Final drive	Rear final drive
Initial filling	1.5 ltr.	01R
Oil change	No change [1]	
Lubricant	Gear oil SAE 75W90	
• [1] Lifetime filling, change only after performing repair work.		

The gear oil SAE 75W90 (synthetic oil) is available as a replacement part.

- 0.5 ltr. - Part No. -G 052 145 A1-
- 1.0 ltr. - Part No. -G 052 145 S2-

Check gear oil level in rear final drive ⇒ page 105 .

Protected by copyright. Copying for private or commercial purposes, in part or in whole, is not permitted unless authorised by AUDI AG. AUDI AG does not guarantee or accept any liability with respect to the correctness of information in this document. Copyright by AUDI AG.

4 Notes on tow-starting and towing

Caution

When the vehicle is towed, the selector lever must be set to position "N" and the vehicle must not be towed for a distance of more than 50 km or at a speed in excess of 50 km/h, as the gearbox would otherwise be seriously damaged.

Note

It is not possible to start the engine by means of tow-starting, for instance in the case of insufficient battery charge or if the starter is not working.

Protected by copyright. Copying for private or commercial purposes, in part or in whole, is not permitted unless authorised by AUDI AG. AUDI AG does not guarantee or accept any liability with respect to the correctness of information in this document. Copyright by AUDI AG.

5 Transmission layout

5.1 Gearbox diagram for vehicles with front-wheel drive

A - Clutch A

B - Clutch B

E - Clutch E

F - Clutch F

C - Clutch C

D - Clutch D

G - Clutch G

F1 - Freewheel 1

1 - Engine

2 - Torque converter with lock-up clutch

3 - Differential

4 - Automatic gearbox

5 - Pinion shaft

Z1, Z2 and Z3 = Spur gears (intermediate drive) ⇒ page 2

Z4, Z5 = Final drive gear set ⇒ page 2

Protected by copyright. Copying for private and commercial purposes, in part or in whole, is not permitted unless authorised by AUDI AG. AUDI AG does not guarantee or assume any liability with respect to the correctness of information in this document. Copyright by AUDI AG.

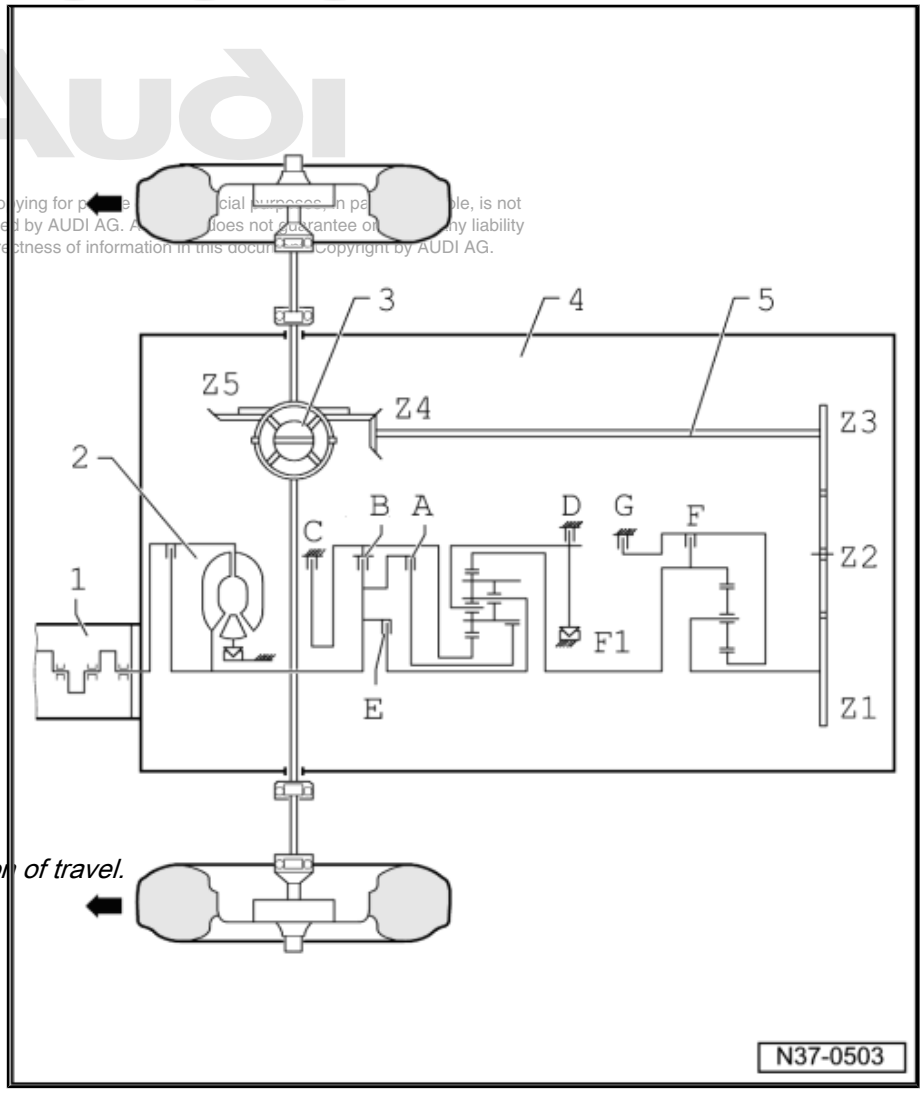

Note

Arrows point in direction of travel.

5.2 Gearbox diagram for vehicles with four-wheel drive

A - Clutch A

B - Clutch B

E - Clutch E

F - Clutch F

C - Clutch C

D - Clutch D

G - Clutch G

F1 - Freewheel 1

1 - Engine

2 - Torque converter with lock-up clutch

3 - Front differential

Z4, Z5 = Front final drive gear set ⇒ page 4

4 - Automatic gearbox

5 - Pinion shaft

6 - Output shaft

7 - Torsen differential

Z1, Z2 and Z3 = Spur gears (intermediate drive for front axle) ⇒ page 4

Z6, Z7 = Spur gears (intermediate drive for rear axle) ⇒ page 4

8 - Propshaft

9 - Rear differential

Z8, Z9 = Rear final drive gear set ⇒ page 4

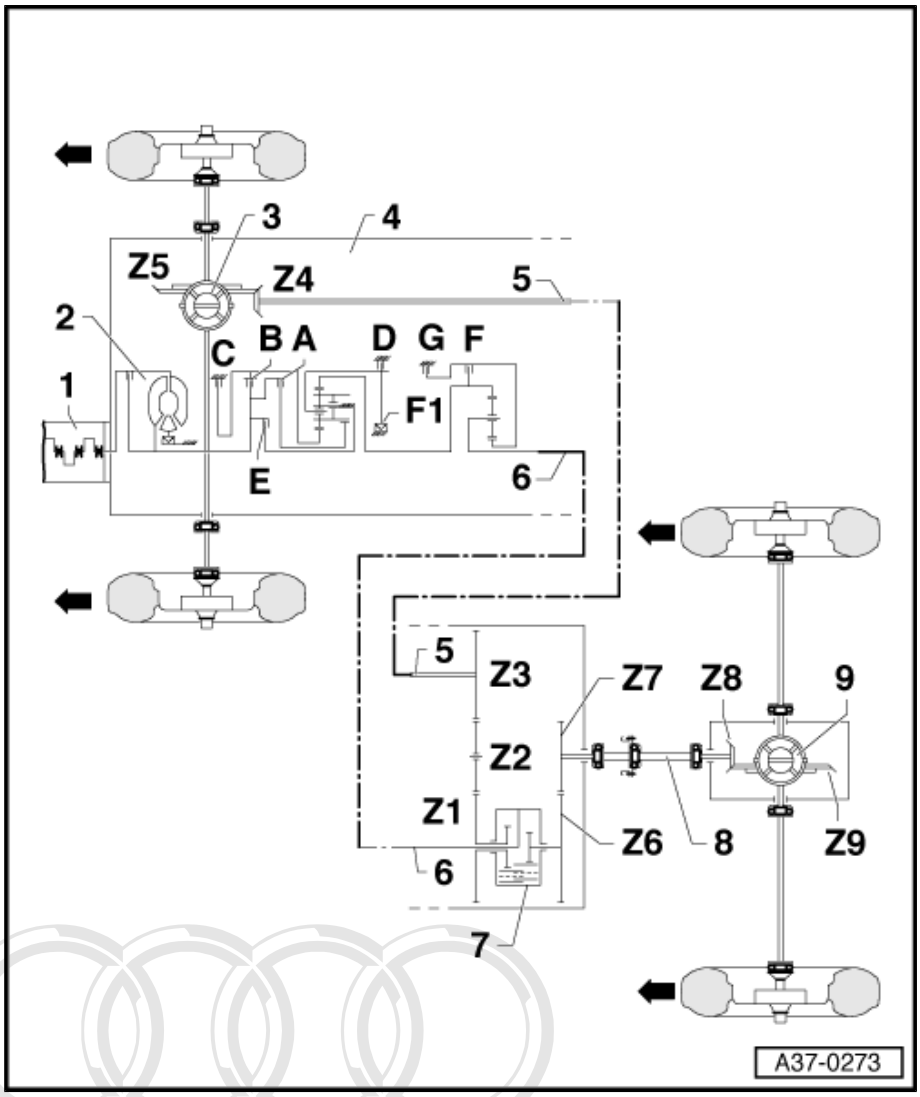

Note

Arrows point in direction of travel.

5.3 Actuation of selector elements

Copyright by AUDI AG. Copying for commercial purposes, in part or in whole, is not permitted unless authorised by AUDI AG. AUDI AG does not guarantee or accept any liability with respect to the correctness of information in this document. Copyright by AUDI AG.

In the event of malfunctions or poor acceleration and performance, the following table shows which selector elements are operated in the individual gears. It is thus possible to establish which selector elements are not functioning correctly.

Gear		Solenoid valves							Clutches							
Item	Gear position	Solenoid valves			Pressure control valves				Clutch							Free-wheel
		1	2	3	1	2	3	4	A	B	E	F	C	D	G	1st gear
R =	Reverse gear	x			x		x			x				x	x	

Gear	Solenoid valves							Clutches							
N = Neutral	x	x		x		x					x			x	x
D = 1st gear	x	x		x		x		x						x	
D = 2nd gear	x	x		x	x	x		x				x		x	
D = 3rd gear		x	x – x	x	x			x			x	x			
D = 4th gear			x – x	x				x		x	x				
D = 5th gear	x		x – x	x	x					x	x	x			
2 = 1st gear	x			x		x		x					x	x	x
D = 5th to 4th gear	x		x	x	x		x	(x)		x	x	(x)			

“x” = Component in operation

“–” = Component not in operation

“(x)” = Component is actuated according to situation (driving condition)

Protected by copyright. Copying for private or commercial purposes, in part or in whole, is not permitted unless authorised by AUDI AG. AUDI AG does not guarantee or accept any liability with respect to the correctness of information in this document. Copyright by AUDI AG.

6 Repair instructions

6.1 Contact corrosion!

- Contact corrosion can occur if non-approved fasteners are used on the vehicle (bolts, nuts, washers etc.).
- For this reason, only fasteners with a special surface coating are fitted. These parts can be identified by their greenish colour.
- In addition, rubber components, plastic components and adhesives are made of non-conductive material.
- If you are not sure whether used parts can be re-installed, always fit new parts.

Caution

- *Only use Genuine Audi parts.*
- *Accessories must be approved by AUDI AG.*
- *Damage resulting from contact corrosion is not covered by the warranty.*

6.2 General repair instructions

Proper tools and the maximum possible care and cleanliness are essential for satisfactory gearbox repairs. The usual basic safety precautions also naturally apply when carrying out repair work.

A number of generally applicable instructions for the various repair procedures - which were previously repeated at numerous places in the Workshop Manual - are summarised here. They apply to the work described in this Manual.

Special tools

For a complete list of special tools used in this Workshop Manual
⇒ Workshop equipment and special tools catalogue

Gearbox

- Observe rules for cleanliness when working on automatic gearbox ⇒ page 19 .
- Do not run the engine or tow the vehicle with the ATF oil pan removed or when there is no ATF in the gearbox.
- If gearbox has been removed from vehicle, secure torque converter to prevent it from falling out.
- Before installing gearbox check position of torque converter ⇒ page 23 .
- When installing gearbox, make sure that dowel sleeves are correctly seated.
- When fitting a new automatic gearbox, check the following fluid levels and top up if necessary: ATF in the planetary gearbox ⇒ page 76 , the gear oil in the front final drive ⇒ page 155 and the gear oil in the transfer box ⇒ page 177 . Capacities and specifications ⇒ page 10
- When fitting a new rear final drive, check the gear oil level in the rear final drive and top up if necessary ⇒ page 105 . Capacities and specifications ⇒ page 11

Protected by copyright. Copying for private or commercial purposes, in part or in whole, is not permitted unless authorised by AUDI AG. AUDI AG does not guarantee or accept any liability with respect to the correctness of information in this document. Copyright by AUDI AG.

O-rings, oil seals and gaskets

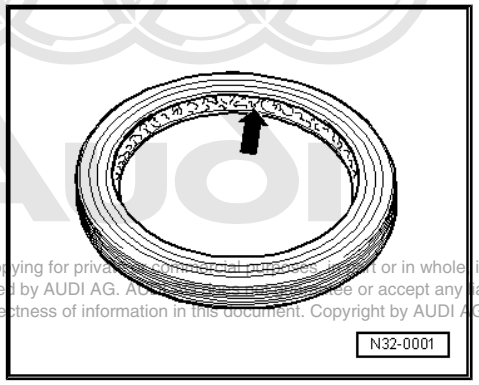

- Always install new O-rings, oil seals and gaskets.
- After removing gaskets and seals, always inspect the contact surface on the housing or shaft for burrs resulting from removal or for other signs of damage.
- Thoroughly clean housing joint surfaces before assembling.
- Before installing oil seals, fill the space between the sealing lips -arrow- about half full with grease -G 052 128 A1- .
- The open side of the oil seal should face the side containing the fluid.
- Before installing, lightly lubricate outer circumference of seal and sealing lips with ATF or gear oil (depending on fitting location).
- Lightly lubricate O-rings with gear oil or ATF (depending on fitting location) before inserting to prevent them from getting crushed during assembly.
- Use only ATF for parts running in ATF. Other lubricants will cause malfunction of the gearbox hydraulics.
- When installing a new oil seal, position the seal such that the sealing lip does not contact the shaft in the same place as the old seal (make use of installation depth tolerances).
- Renew paper gaskets, clean all sealing surfaces thoroughly and remove previous gaskets completely.
- After installing, check the relevant fluid levels and top up if necessary: ATF in planetary gearbox ⇒ page 76 , gear oil in front final drive ⇒ page 155 , gear oil in transfer box ⇒ page 177 , gear oil in rear final drive ⇒ page 105 . Capacities and specifications ⇒ page 10

Protected by copyright. Copying for private or commercial purposes, in part or in whole, is not permitted unless authorised by AUDI AG. AUDI AG does not guarantee or accept any liability with respect to the correctness of information in this document. Copyright by AUDI AG.

Nuts, bolts

- Slacken bolts in reverse sequence to the specified tightening sequence.
- Nuts and bolts which secure covers and housings should be loosened and tightened in diagonal sequence and in stages if no tightening sequence is specified.
- Renew self-locking nuts and bolts.
- Use a wire brush to clean the threads of bolts which are secured with locking fluid. Then apply locking fluid -AMV 185 101 A1- to bolts again before fitting.
- Threaded holes which take self-locking bolts or bolts coated with locking fluid must be cleaned (using a tap or similar). Otherwise there is a danger of the bolts shearing off the next time they are removed.

Locking elements

- Do not overstretch circlips; renew if necessary.
- Renew circlips which have been damaged or over-tensioned.
- Circlips must be properly seated in the base of the groove.

Bearings

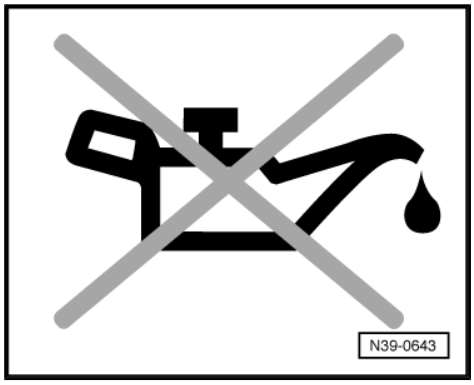

- Install needle bearings so the lettering (side with thicker metal) faces towards the installing tool.
- Do not interchange inner or outer races of bearings of the same size.
- Always renew the tapered roller bearings on one shaft together and use new bearings from a single manufacturer.
- Lubricate bearings with gear oil or ATF, depending on fitting location.
- Tapered roller bearings for differential and pinion shaft in rear final drive are low-friction bearings. Do not additionally oil new tapered roller bearings when measuring friction torque. The bearings are pre-treated at the factory with a special type of oil for this purpose.
- Heat inner races of tapered roller bearings to approx. 100°C before installing. Press in onto stop when installing so there is no axial clearance.

Shims

- Measure shims at several points with a micrometer. The exact shim thickness required can be obtained by combining shims of different thicknesses.
- Check for burrs and damage. Install only shims which are in perfect condition.

Valve body

- Renew the valve body if any of the selector elements are scorched.

Self-diagnosis

- Before performing service work on the automatic gearbox, trace the cause of the fault as exactly as possible ⇒ Automatic gearbox 01V, self-diagnosis; Rep. Gr. 01 .

Protected by copyright. Copying for private or commercial purposes, in part or in whole, is not permitted unless authorised by AUDI AG. AUDI AG does not guarantee or accept any liability with respect to the correctness of information in this document. Copyright by AUDI AG.

7 Rules for cleanliness when working on the automatic gearbox

– Observe the general repair instructions ⇒ page 16 .

- Thoroughly clean all joints and surrounding areas before dismantling.
- Place removed parts on a clean surface and cover them over. Use sheeting and paper. Use lint-free cloths.
- Carefully cover or seal open components if repairs cannot be carried out immediately.
- Only install clean components: do not remove replacement parts from packaging until just before installation.

Protected by copyright. Copying for private or commercial purposes, in part or in whole, is not permitted unless authorised by AUDI AG. AUDI AG does not guarantee or accept any liability with respect to the correctness of information in this document. Copyright by AUDI AG.

32 – Torque converter

1 Torque converter

Caution

Check position of torque converter before installing gearbox ⇒ page 23 .

Note

- *Observe rules for cleanliness when working on automatic gearbox ⇒ page 19 .*
- *Repair instructions ⇒ page 16 .*
- *Apply thin coat of ATF to oil seals. Other lubricants will cause malfunction of the gearbox hydraulics.*

1 - Torque converter

- ❑ Secure with support bridge -30-211 A- to prevent it falling out when gearbox is removed
- ❑ Identification ⇒ page 21
- ❑ Installing ⇒ page 23

2 - Oil seal

- ❑ Renewing ⇒ page 21

3 - Bearing ring

- ❑ Behind oil seal
- ❑ Renew if damaged

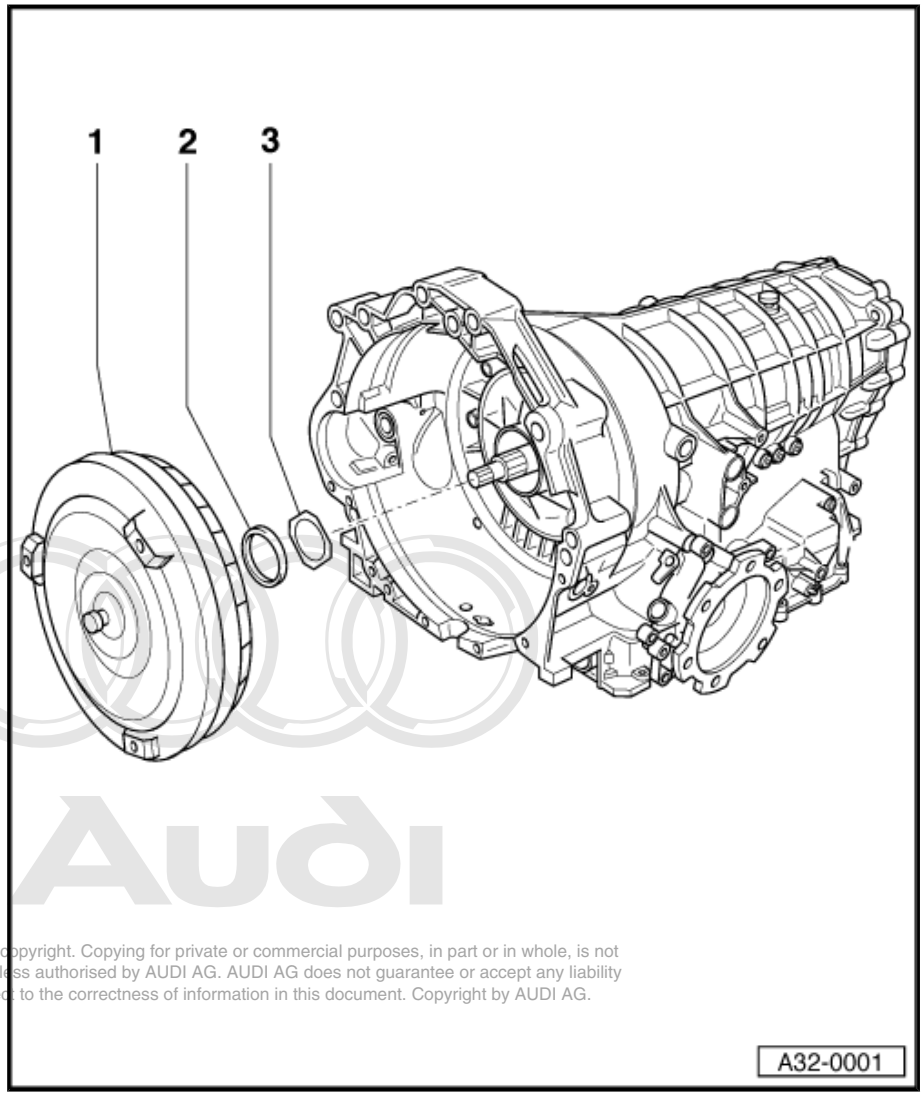

Protected by copyright. Copying for private or commercial purposes, in part or in whole, is not permitted unless authorised by AUDI AG. AUDI AG does not guarantee or accept any liability with respect to the correctness of information in this document. Copyright by AUDI AG.

1.1 Identification of torque converter

- There are various types of torque converter. They are marked with code letters -arrow-.
- Torque converter/gearbox allocation ⇒ page 2 .

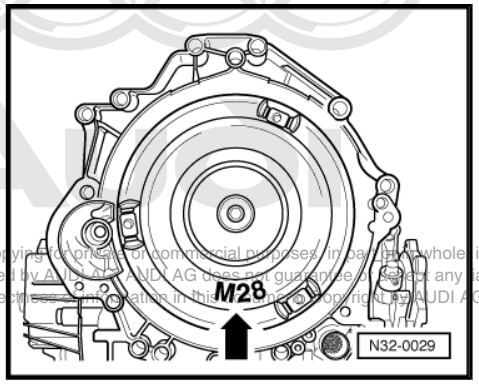

Protected by copyright. Copying for private or commercial purposes, in part or in whole, is not permitted unless authorised by AUDI AG. AUDI AG does not guarantee or accept any liability with respect to the correctness and completeness of this document. Copyright by AUDI AG.

1.2 Draining torque converter

Special tools and workshop equipment required

- Used oil collection and extraction unit -V.A.G 1782-

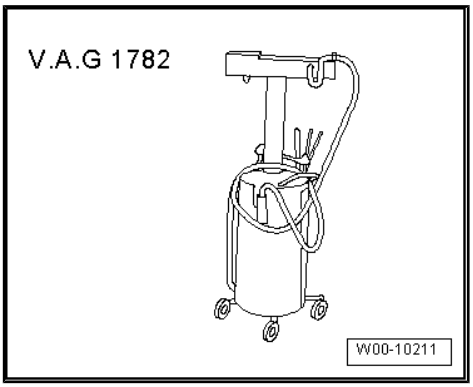

Procedure

If the ATF is contaminated, drain the torque converter as follows

– Extract ATF from torque converter with used oil collection and extraction unit -V.A.G 1782- and oil extractor probe.

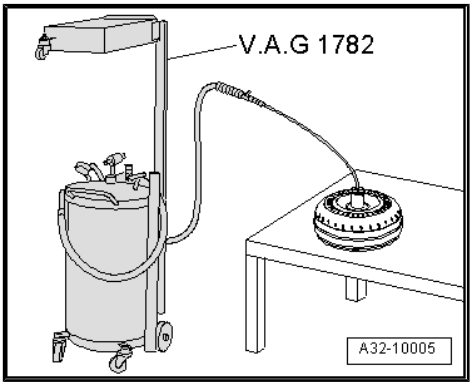

1.3 Renewing oil seal for torque converter

Special tools and workshop equipment required

♦ Oil seal extractor lever -VW 681-

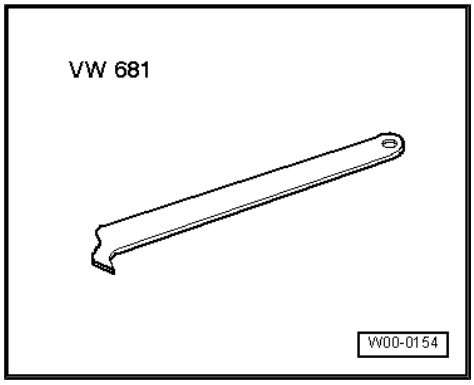

♦ Thrust piece -3295-

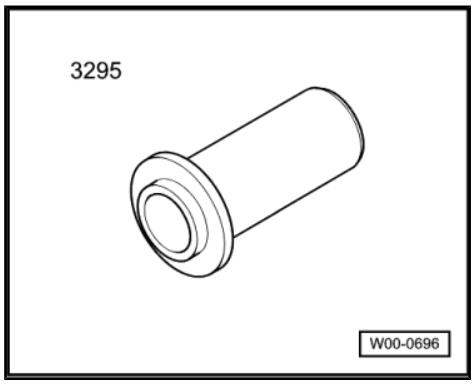

Procedure

– Remove gearbox:
⇒ “2.1 Removing gearbox - vehicles with 6-cylinder petrol engine”, page 40 ,
⇒ “2.2 Removing gearbox - vehicles with 8-cylinder engine”, page 49 or
⇒ “2.3 Removing gearbox - vehicles with 6-cylinder TDI engine”, page 59 .

– Secure gearbox to assembly stand ⇒ page 72 .

– Apply oil seal extractor lever -VW 681- directly behind the sealing lip of the oil seal to avoid damaging the bearing ring located behind it.

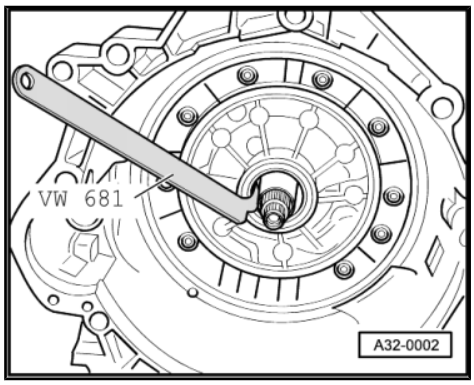

– Pry out oil seal using oil seal extractor lever -VW 681- .

– Insert bearing ring.

– Lightly lubricate outer circumference and sealing lip of oil seal with ATF.

Protected by copyright. Copying for private or commercial purposes, in part or in whole, is not permitted unless authorised by AUDI AG. AUDI AG does not guarantee or assume any liability with respect to the correctness of information in this document. Copyright by AUDI AG.

• Installation position: open side of oil seal points towards gearbox

– Drive in torque converter oil seal with thrust piece -3295- until thrust piece reaches stop.

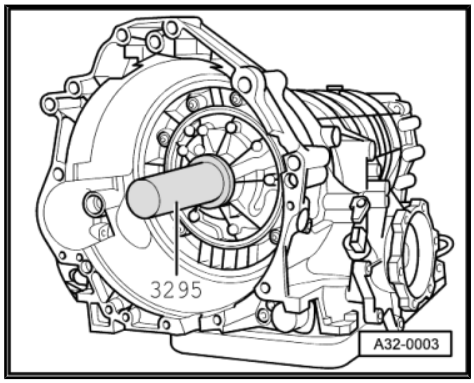

1.4 Checking torque converter

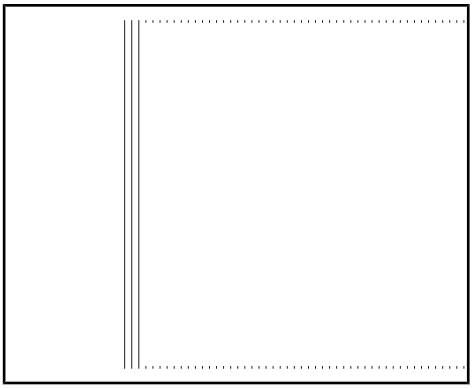

– Check hub -arrow- of torque converter for scoring and damage.

– Check that balance plates are firmly secured and threads are undamaged.

If torque converter shows scoring or damage (abnormal wear), if balance plates are loose or threads are damaged:

– Renew torque converter.

1.5 Installing torque converter

Special tools and workshop equipment required

♦ Depth gauge

Procedure

– Push torque converter hub through oil seal as far as first stop.

– Push torque converter into torque converter bellhousing by hand, turning it so that torque converter hub engages in slots of internal gear of ATF pump.

• You should feel the torque converter slide into place.

If the torque converter is correctly inserted, the distance between the surface of the securing eyes and the surface of the torque converter bellhousing is at least 23 mm.

If the torque converter has not been fully inserted, the distance will be only approx. 11 mm.

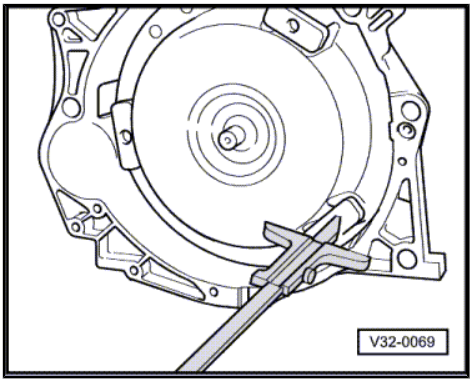

Caution

If the torque converter is not fitted correctly, the torque converter drive lugs or the ATF pump will be seriously damaged when the gearbox is joined to the engine.

Protected by copyright. Copying for private or commercial purposes, in part or in whole, is not permitted unless authorised by AUDI AG. AUDI AG does not guarantee or accept any liability with respect to the correctness of information in this document. Copyright by AUDI AG.

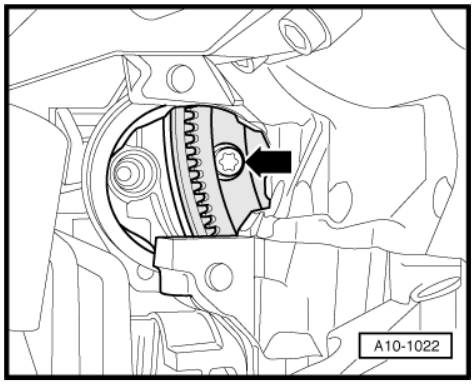

Note

If the bolts -arrow- securing the torque converter to the drive plate are just 2 mm too long they will make a dent in the torque converter, which will damage the torque converter clutch. For this reason it is important to use only the correct type of bolts (same as original equipment).

When you then install the gearbox, adhere to the following instructions:

Caution

Before and while you are tightening the bolts on the engine/ gearbox flange keep checking that the torque converter can still be rotated behind the drive plate. If the converter cannot be turned, it must be assumed that it has not been installed correctly and the drive lugs on the converter or the ATF pump will be damaged during final tightening of bolted connections.

Protected by copyright. Copying for private or commercial purposes, in part or in whole, is not permitted unless authorised by AUDI AG. AUDI AG does not guarantee or accept any liability with respect to the correctness of information in this document. Copyright by AUDI AG.

37 – Controls, housing

1 Servicing selector mechanism

WARNING

Before working on vehicle while engine is running, shift selector lever into position "P" and apply handbrake.

1.1 Checking ignition key removal lock

– Turn ignition key to "ignition on" position.

– Press and hold brake pedal.

• When button in selector lever handle is pressed, it should be possible to move selector lever out of position "P" without "catching".

• It should not be possible to remove the ignition key when the selector lever is in any position other than "P".

– Shift selector lever into "P" position.

• It should be possible to move ignition key to removal position without "catching".

– Pull out ignition key.

• Selector lever cannot be shifted out of "P" position with button pressed and foot brake depressed.

If the ignition key removal lock does not function as described:

– Adjust locking cable ⇒ page 38 .

1.2 Checking selector mechanism

♦ It should not be possible to operate the starter while the selector lever is in position "R, D", "4, 3, 2", "S" or in the "tiptronic gate".

♦ On right-hand drive vehicles the starter should not operate in selector lever positions "P" and "N" when the locking button in the selector lever handle is pressed.

♦ When travelling at speeds above 5 km/h and shifting into selector lever position "N", the solenoid for the selector lever lock must not engage and block the selector lever. The selector lever can be shifted into a driving gear.

Protected by copyright. Copying for private or commercial purposes, in part or in whole, is not permitted unless authorised by AUDI AG. AUDI AG does not guarantee or accept any liability with respect to the correctness of information in this document. Copyright by AUDI AG.

♦ When travelling at speeds below 2 km/h (almost stationary) and shifting into selector lever position "N", the solenoid for the selector lever lock should only engage after about 1 second. Selector lever cannot be shifted out of "N" position until brake pedal is depressed.

Selector lever in "P" position and ignition switched on:

– Do not depress brake pedal.

• Selector lever is locked and cannot be shifted out of "P" position. Solenoid for selector lever lock blocks selector lever.

– Press and hold brake pedal.

• Solenoid for selector lever lock releases selector lever. It is possible to shift into a driving gear. Shift selector lever slowly from "P" position through "R, N, D, 4, 3 and 2" or "S" and check

whether the selector lever position indicator in the instrument cluster shows the correct selector lever position in each case.

Selector lever in “N” position and ignition switched on:

– Do not depress brake pedal.

• After a short waiting time: Selector lever is locked and cannot be shifted out of “N”position. Solenoid for selector lever lock blocks selector lever.

– Depress brake pedal.

• Solenoid for selector lever lock releases selector lever. It is possible to shift into a driving gear.

Selector lever in “D” position, ignition and lights switched on:

– Shift the selector lever out of “D” into the tiptronic gate.

• The illuminated “D” symbol in the selector mechanism cover should go out and the “+” and “–” symbols should light up.

• The selector lever position indicator in the instrument cluster should switch from “PRND432” or “PRNDS” to “54321” when the selector lever is shifted into the “tiptronic gate”.

The reproduction of this document for commercial purposes, in part or in whole, is not permitted unless authorised by AUDI AG. AUDI AG does not guarantee or accept any liability with respect to the correctness of information in this document. Copyright by AUDI AG.

If the selector mechanism does not function as described:

– Check selector lever cable and adjust if necessary ⇒ page 35 .

1.3 Dismantling and assembling selector mechanism

Caution

Contact corrosion! Notes ⇒ page 16 .

Note

- *Lubricate all bearings and moving surfaces with polycarbamide grease -G 052 142 A2- .*
- *The centre console must be removed for repair work to be carried out ⇒ Rep. Gr. 70 .*

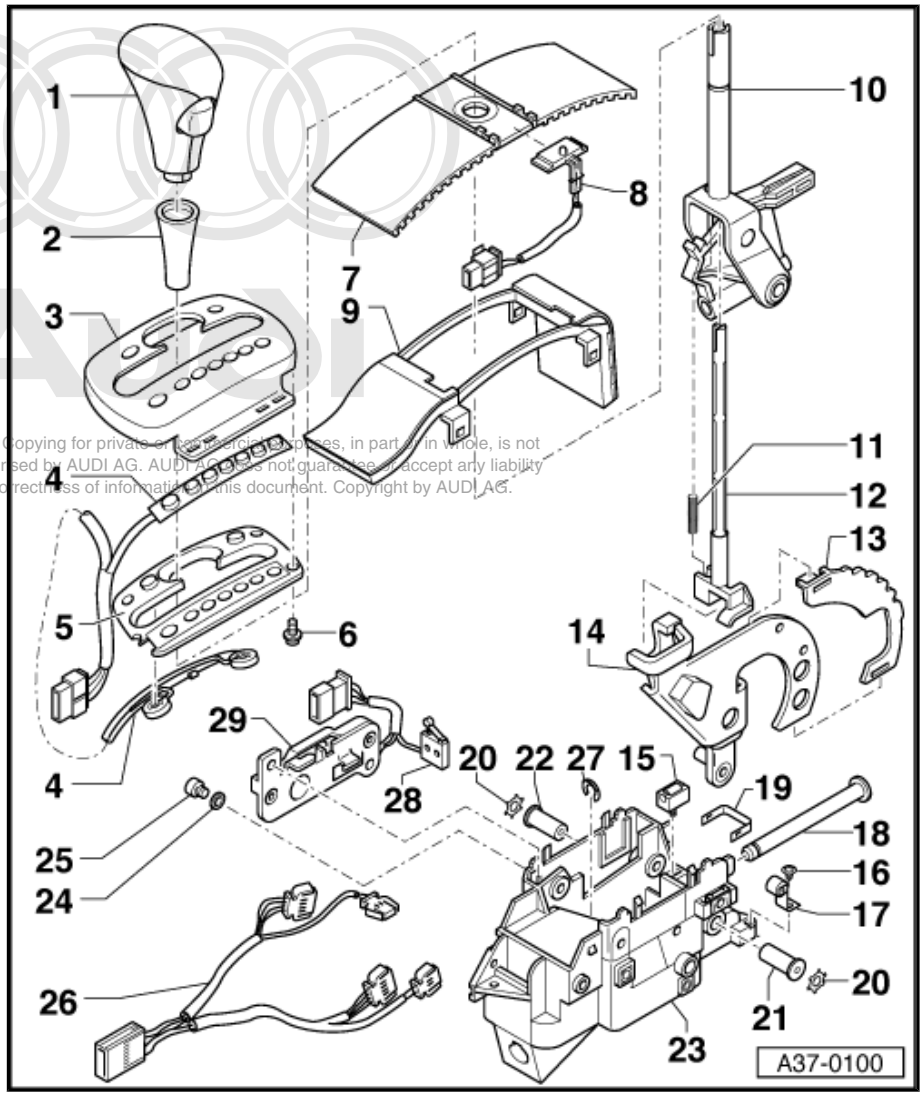

Copyright by AUDI AG. Copying for private or commercial purposes, in part or in whole, is not permitted unless authorised by AUDI AG. AUDI AG does not guarantee or accept any liability with respect to the correctness of information in this document. Copyright by AUDI AG.

1 - Selector lever handle

- ❑ To remove, push sleeve for selector lever ⇒ Item 2 (page 27) downwards, pull the button in the handle out as far as it will go, and then remove the handle by pulling it upwards
- ❑ To install, press handle onto selector lever and pull sleeve upwards to secure

2 - Sleeve for selector lever

- ❑ Check to ensure that the seal in the sleeve is fitted correctly and whether it is damaged in any way

3 - Cover

- ❑ With selector indicator
- ❑ To remove, disengage retainer lugs of shift unit from cover
- ❑ Lift out together with ⇒ Item 5 (page 27) and ⇒ Item 4 (page 27)
- ❑ Unclip cable bracket on shift unit ⇒ Item 23 (page 28) and unplug electrical connector
- ❑ Wiring layout ⇒ page 30

4 - Light strip

- ❑ With wiring harness and LEDs for basic illumination and upshift/downshift indicator for tiptronic
- ❑ Wiring layout ⇒ page 30

5 - Symbol insert

- ❑ Detach insert together with light strip ⇒ Item 4 (page 27) from cover ⇒ Item 3 (page 27)

6 - Bolt

- ❑ 4 x
- ❑ Use with washer

7 - Sliding cover

- ❑ Unclip cable bracket on shift unit ⇒ Item 23 (page 28) and unplug electrical connector
- ❑ Pull sliding cover out of guide together with gear selection indicator ⇒ Item 8 (page 27)
- ❑ Wiring layout ⇒ page 30

8 - Gear selection indicator

- ❑ With bulb holder and wiring harness

- ❑ Unclip 4 retainer lugs on sliding cover ⇒ Item 7 (page 27) (move bulb holder slightly towards centre of sliding cover)

9 - Guide

- ❑ To remove, disengage 4 retainer lugs on shift unit ⇒ Item 23 (page 28)

10 - Selector lever

- ❑ Remove together with pull rod ⇒ Item 12 (page 28) and spring ⇒ Item 11 (page 28)

11 - Spring

- ❑ For pull rod

12 - Pull rod

- ❑ Insert in selector lever together with spring ⇒ Item 11 (page 28)

Introduction © Copyright. Copying for private or commercial purposes, in part or in whole, is not permitted unless authorised by AUDI AG. AUDI AG does not guarantee or accept any liability with respect to the correctness of information in this document. Copyright by AUDI AG.

13 - Detent plate

- ❑ Release retaining tabs to remove ⇒ page 31

14 - Cable lever

- ❑ Before installing, grease bearings supporting cable lever pivot shafts

15 - Detent for tiptronic

16 - Bolt

17 - Detent spring with roller

- ❑ Removing and installing ⇒ page 31

18 - Pin

- ❑ For selector lever ⇒ Item 10 (page 28)
- ❑ Push out towards rear to remove
- ❑ To install, place shouldered surface on head of pin against contact surface of shift unit

19 - Retaining clip

- ❑ For tiptronic switch -F189- (recognition) ⇒ Item 28 (page 28)
- ❑ Release retaining tabs to remove ⇒ page 31

20 - Serrated ring

- ❑ To axially secure the cable lever pivot shafts
- ❑ 2 pieces (left and right)
- ❑ Renew
- ❑ Pry off with screwdriver to remove

21 - Cable lever pivot shaft (left)

- ❑ Short version
- ❑ To support cable lever ⇒ Item 14 (page 28)

22 - Cable lever pivot shaft (right)

- ❑ Long version
- ❑ To support cable lever ⇒ Item 14 (page 28)

23 - Shift unit

24 - Washer

25 - Hexagon socket head bolt

- ❑ 2 x
- ❑ Use with washer
- ❑ For securing tiptronic switch -F189- (upshift/downshift switch) ⇒ Item 29 (page 29)

26 - Wiring harness

- ❑ Wiring layout ⇒ page 30

27 - Retaining clip

- ❑ For pin ⇒ Item 18 (page 28)

28 - tiptronic switch -F189- (recognition)

- ❑ Checked via self-diagnosis
- ❑ To install, attach to pins in shift unit and secure with retaining clip ⇒ Item 19 (page 28) ⇒ page 31
- ❑ Combined as one unit with tiptronic switch -F189- (upshift/downshift switch) ⇒ Item 29 (page 29)

29 - tiptronic switch -F189- (upshift/downshift switch)

- ❑ Checked via self-diagnosis
- ❑ Remove with selector lever in position “D”
- ❑ Combined as one unit with tiptronic switch -F189- (recognition) ⇒ Item 28 (page 28)
- ❑ Unclip wiring bracket on shift unit and unplug connector.
- ❑ Wiring layout ⇒ page 30

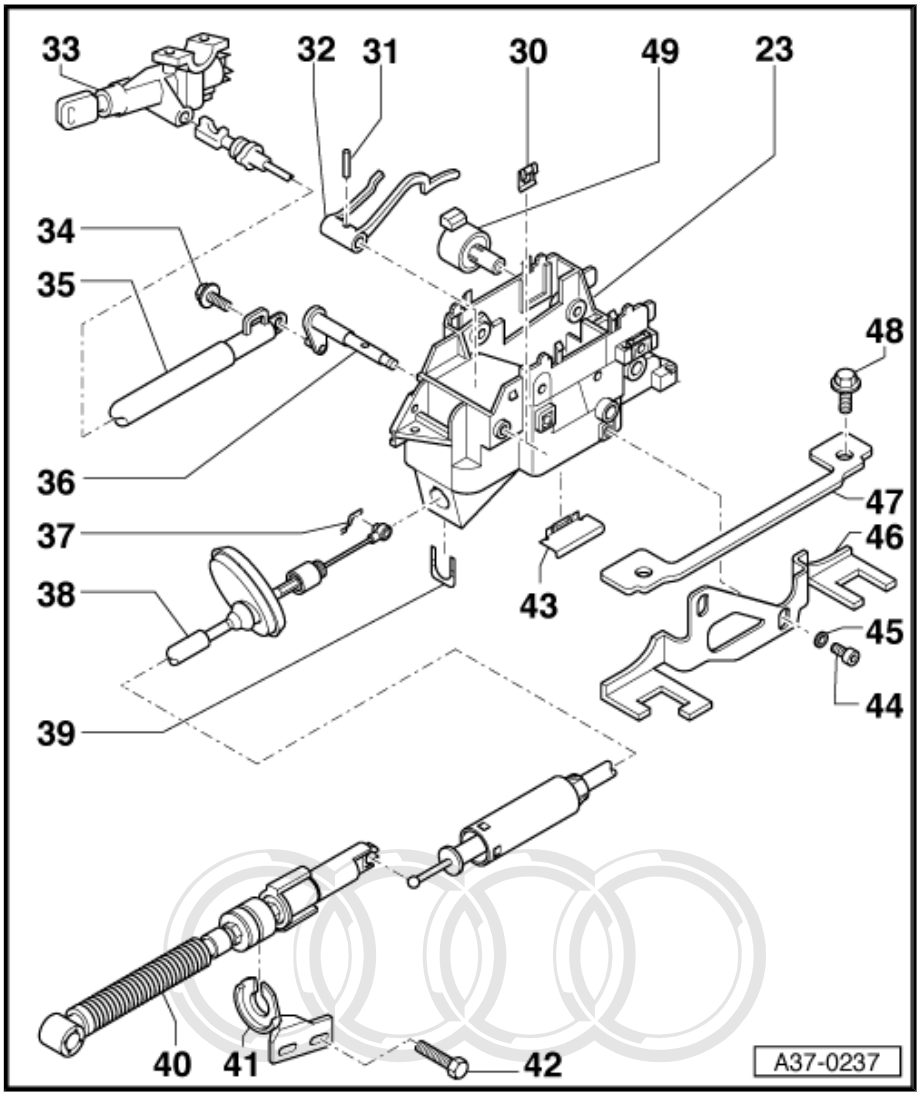

30 - Retaining clip

- ❑ For pin ⇒ Item 36 (page 29)

31 - Shear pin

- ❑ Drive in and drive out with drift

32 - Lever

- ❑ For locking cable

33 - Starter switch

- ❑ With ignition key removal lock

34 - Bolt, 9 Nm

- ❑ With washer

35 - Locking cable

- ❑ For ignition key removal lock
- ❑ Do not kink
- ❑ Removing and installing ⇒ page 37
- ❑ Adjusting ⇒ page 38

36 - Pin

- ❑ For lever ⇒ Item 32 (page 29)

37 - Retaining clip

- ❑ To secure selector lever cable to selector lever

38 - Selector lever cable (rear)

- ❑ Do not kink
- ❑ Removing and installing ⇒ page 32
- ❑ Adjusting ⇒ page 36
- ❑ Disconnecting selector lever cable ⇒ page 31

39 - Securing clip

40 - Selector lever cable (front)

- ❑ Do not kink
- ❑ Removing and installing ⇒ page 32
- ❑ Adjusting ⇒ page 36

Protected by copyright. Copying for private or commercial purposes, in part or in whole, is not permitted unless authorised by AUDI AG. AUDI AG does not guarantee or accept any liability with respect to the correctness of information in this document. Copyright by AUDI AG.

- ❑ Disconnecting selector lever cable ⇒ page 31

41 - Support bracket

42 - Bolt, 23 Nm

43 - Securing clip

- ❑ For selector lever lock solenoid -N110-
- ❑ Release snap connection to shift unit using a screwdriver ⇒ page 31

44 - Hexagon socket head bolt

- ❑ 4 x

45 - Washer

46 - Retaining plate

- ❑ 2 pieces (left and right)

47 - Locking plate

- ❑ 2 pieces (left and right)

Protected by copyright. Copying for private or commercial purposes, in part or in whole, is not permitted unless authorised by AUDI AG. AUDI AG does not guarantee or accept any liability with respect to the correctness of information in this document. Copyright by AUDI AG.

48 - Bolt, 8 Nm

- ❑ 4 x

49 - Selector lever lock solenoid -N110-

- ❑ Removing and installing ⇒ page 31
- ❑ Can be tested via electrical check and measured value block ⇒ Automatic gearbox 01V, self-diagnosis; Rep. Gr. 01

Wiring layout (left-side) on selector mechanism

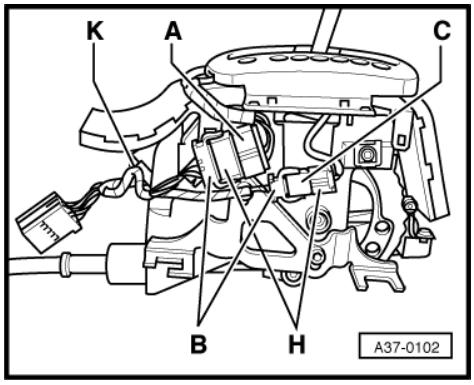

A - Electrical connector for basic illumination and tiptronic upshift/ downshift indicator

B - Electrical connector on wiring harness for selector mechanism

C - Electrical connector for individual gear lamps

H - Retainer for connectors

K - Cable tie for securing wiring harness

Note

No wiring should be installed between the body and the shift unit.

Wiring layout (right-side) on selector mechanism

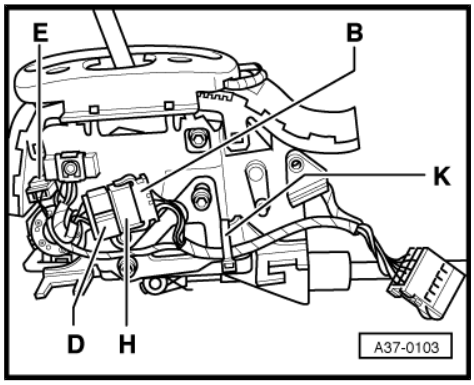

B - Electrical connector on wiring harness for selector mechanism

D - Electrical connector for tiptronic switch -F189-

E - Electrical connector for selector lever lock solenoid -N110-

H - Retainer for connectors

K - Cable tie for securing wiring harness

Note

No wiring should be installed between the body and the shift unit.

Removing and installing selector lever lock solenoid -N110-

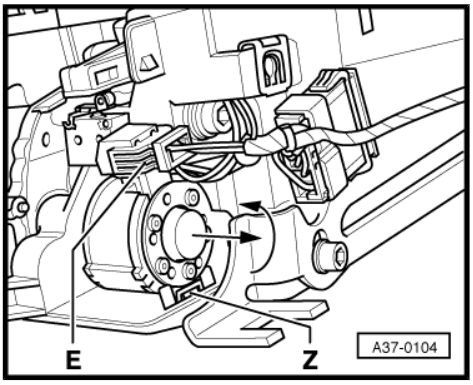

- Disconnect gear selector mechanism from vehicle ⇒ page 32 .
- Unclip electrical connector -E-.
- Release retaining tab -Z- of securing clip on shift unit.
- Pull out selector lever lock solenoid -N110- -arrow-.
- Check selector mechanism after replacing selector lever lock solenoid -N110- ⇒ page 25 .

Removing and installing tiptronic switch -F189- (recognition)

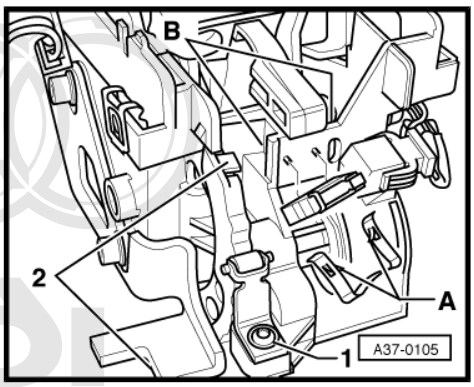

- Remove guide with sliding cover.
- Release retaining tabs -A- of retaining clip -item B-.
- Detach tiptronic switch -F189- (recognition) from retaining pins of shift unit.

Removing and installing detent plate and detent spring with roller

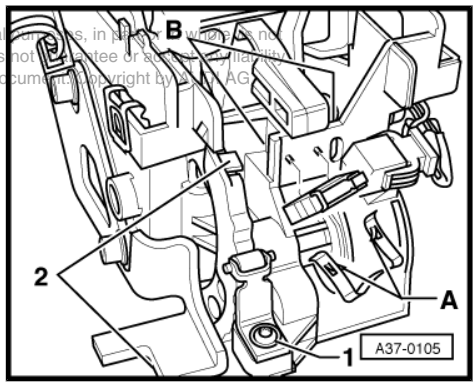

Protected by copyright. Copying for private or commercial purposes, in part or whole, is not permitted unless authorised by AUDI AG. AUDI AG does not guarantee or assume liability with respect to the correctness of information in this document. Copyright by AUDI AG.

Removing:

- Remove guide with sliding cover.
- Unscrew bolt -1- and remove detent spring with roller.
- Shift selector lever into “P” position.
- Release retaining tabs -2- on detent plate and remove detent plate.

Installing:

- Clip the detent plate onto the cable lever.
- Screw the detent spring and roller onto the shift unit.

Disconnecting and reconnecting selector lever cable and support bracket

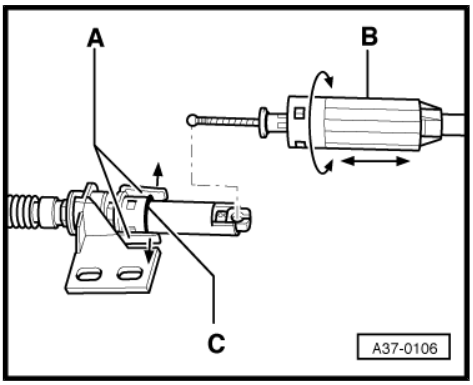

Disconnecting:

- Lift tabs -A- slightly, turn sleeve -B- through approx. 45° and release.
- Detach sleeve -B- from front of selector lever cable.
- Detach ball head from ball socket.

Reconnecting:

- Check seal -C- for damage and renew if necessary.
- Check that seal is correctly seated.
- Insert ball head in ball socket.
- Slide on sleeve and turn approx. 45°.
- Make sure that sleeve locks in place.

1.4 Removing and installing selector lever cable

Special tools and workshop equipment required

- Removal lever -80-200-

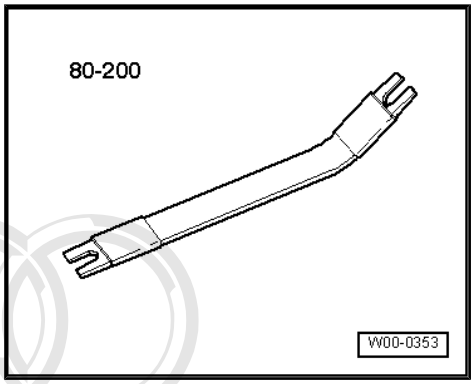

Removing

– Shift selector lever into “P” position.

– Unbolt drive shaft (left-side) from gearbox flange shaft ⇒ Rep. Gr. 40 .

– Remove front exhaust pipe (left-side) with catalytic converter ⇒ Rep. Gr. 26 .

Protected by copyright. Copying for private or commercial purposes, in part or in whole, is not permitted unless authorised by AUDI AG. AUDI AG does not guarantee or accept any liability with respect to the correctness of information in this document. Copyright by AUDI AG.

– If fitted, unscrew heat shield -1- for selector lever cable on left side of gearbox -arrows-.

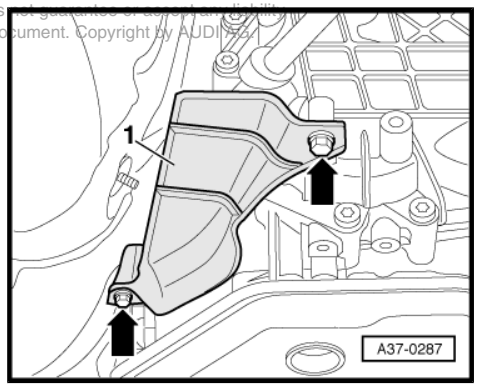

– Remove gearbox support (left-side) ⇒ page 73 .

– Unscrew support bracket for selector lever cable -arrows-.

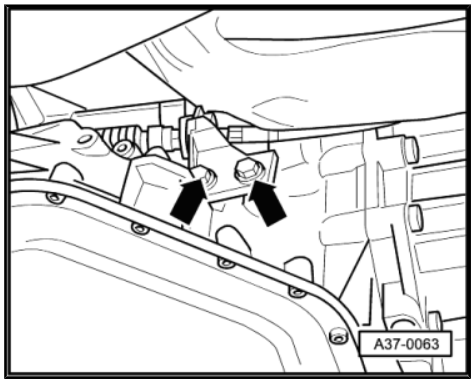

– Remove multi-function switch -F125- -arrows- (leave electrical connector attached).

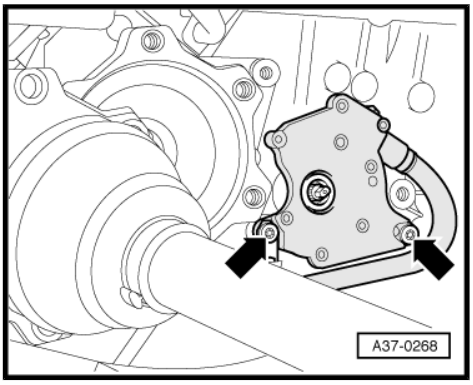

– Use removal lever -80-200- to prise selector lever cable -1- off selector shaft lever -2- (remove retaining clip -arrow- if fitted).

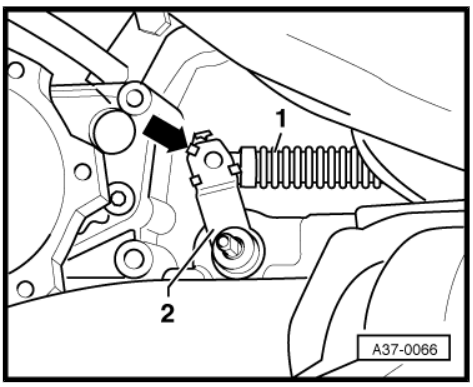

– Remove centre console ⇒ Rep. Gr. 68 .
– Detach locking cable from selector mechanism ⇒ page 37 .
– Remove bolts -arrows- and lift selector mechanism slightly.

Protected by copyright. Copying for private or commercial purposes, in part or in whole, is not permitted unless authorised by AUDI AG. AUDI AG does not guarantee or accept any liability with respect to the correctness of information in this document. Copyright by AUDI AG.

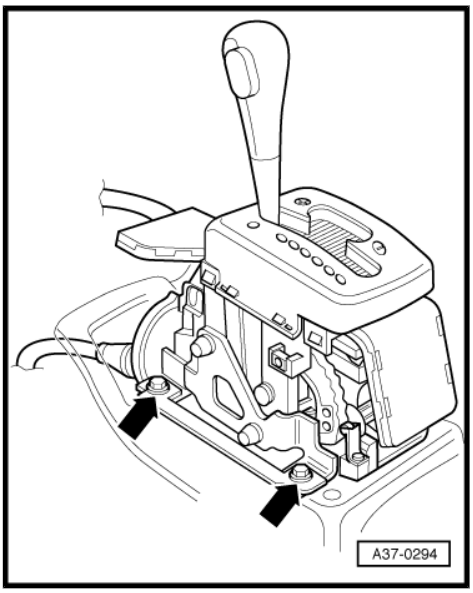

– Remove retaining clip -E- for selector lever cable at rear of shift unit by pulling downwards -arrow-.

– Release retaining clip on cable lever by pressing the two ends together and pull selector lever cable off cable lever.

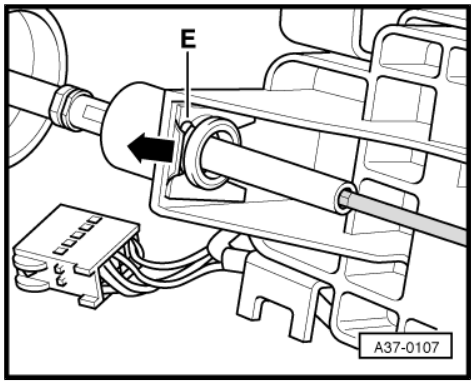

Note

Do not bend or kink the selector lever cable.

– Pull selector lever cable out with protecting sleeve.

– If necessary, detach selector lever cable from support bracket ⇒ page 31 .

Installing

Installation is carried out in reverse sequence; note the following:

Note

- *Do not bend or kink the selector lever cable.*
- *No wiring should be installed between the body and the shift unit.*

– Shift selector lever and selector shaft lever to position “P”.

• Make sure the parking lock engages.

– Lightly lubricate cable eye and ball socket of selector lever cable with polycarbamide grease -G 052 142 A2- .

– Check that protecting sleeve for selector lever cable is installed correctly:

• The marking on the sleeve must face upwards.

– Insert retaining clip in groove on selector lever cable with angled end pointing towards the rear.

– Check adjustment of selector lever cable and adjust if necessary ⇒ page 35 .

– Install multi-function switch -F125- ⇒ page 101 .

– Secure locking cable to selector mechanism ⇒ page 37 .

– Install centre console ⇒ Rep. Gr. 68 .

– Install gearbox support (left-side) ⇒ page 73 .

– Install front exhaust pipe (left-side) with catalytic converter ⇒ Rep. Gr. 26 .

– Bolt drive shaft (left-side) to gearbox flange ⇒ Rep. Gr. 40 .

Tightening torques

Component		Nm
Support bracket for selector lever cable to gearbox		23
Heat shield for selector lever cable to gearbox (8-cylinder: with exhaust system bracket)	M6	9
	M8	23
Gearbox mounting to subframe		40
Selector mechanism to body		8

Protected by copyright. Copying for private or commercial purposes, in part or in whole, is not permitted unless authorised by AUDI AG. AUDI AG does not guarantee or accept any liability with respect to the correctness of information in this document. Copyright by AUDI AG.

1.5 Checking and adjusting selector lever cable

Special tools and workshop equipment required

- Removal lever -80-200-

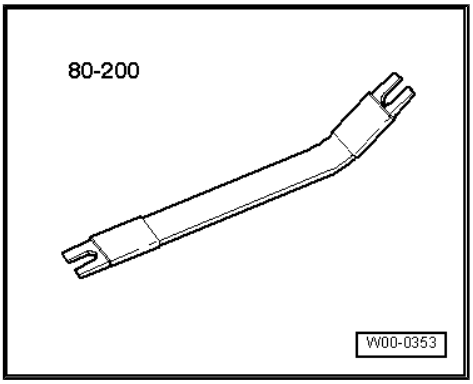

Procedure

– Shift selector lever to position “P”.

– Unbolt drive shaft (left-side) from gearbox flange shaft ⇒ Rep. Gr. 40 .

– Remove front exhaust pipe (left-side) with catalytic converter ⇒ Rep. Gr. 26 .

– If fitted, unscrew heat shield -1- for selector lever cable on left side of gearbox -arrows-.

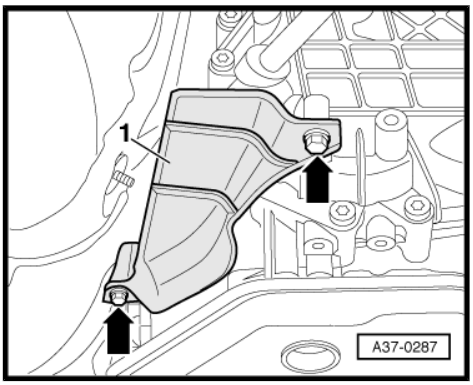

– Remove gearbox support (left-side) ⇒ page 73 .

– Unscrew support bracket for selector lever cable -arrows-.

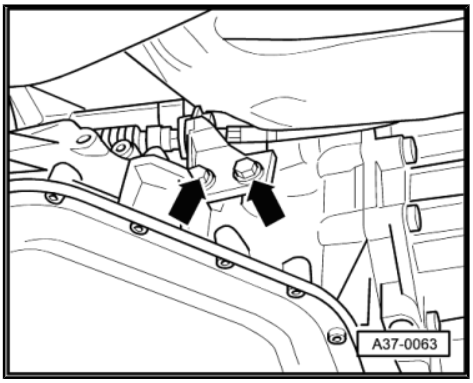

Protected by copyright. Copying for private or commercial purposes, in part or in whole, is not permitted unless authorised by AUDI AG. AUDI AG does not guarantee or accept any liability with respect to the correctness of information in this document. Copyright by AUDI AG.

– Remove multi-function switch -F125- -arrows- (leave electrical connector attached).

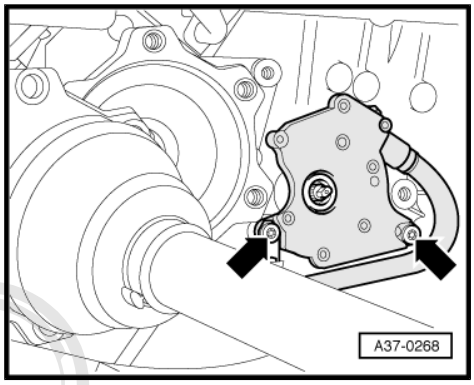

– Use removal lever -80-200- to prise selector lever cable -1- off selector shaft lever -2- (remove retaining clip -arrow- if fitted).

– Shift selector lever from position “P” to “2” or “S”.

• Selector mechanism and selector lever cable must move freely. If necessary renew selector lever cable or service selector mechanism.

– Shift selector lever and selector shaft lever to position “P”.

• Make sure the parking lock engages.

• It should be possible to push selector lever cable onto selector shaft lever; adjust selector lever cable if necessary.

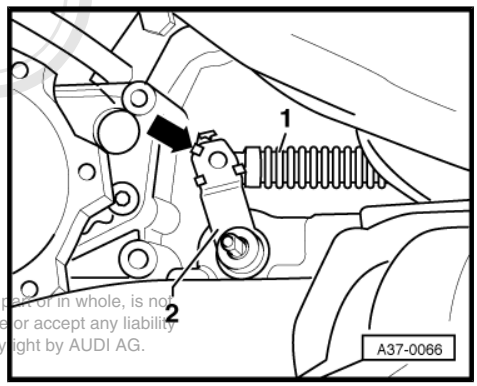

Protected by copyright. Copying for private or commercial purposes, in part or in whole, is not permitted unless authorised by AUDI AG. AUDI AG does not guarantee or accept any liability with respect to the correctness of information in this document. Copyright by AUDI AG.

Adjusting

• Selector lever cable is not attached to selector shaft lever. If necessary, lever off selector lever cable using removal lever -80-200- .

– Shift selector lever to position “P”.

– Shift selector shaft lever to “P” position in direction of -arrow- (all the way to the rear).

• The parking lock must engage; it should no longer be possible to turn both front wheels in the same direction.

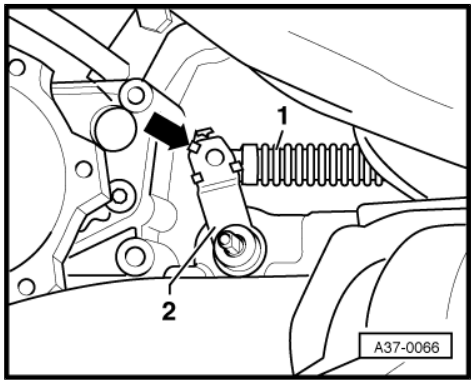

– Slacken off bolts -arrows- on support bracket.

– Push support bracket towards front or towards rear until ball socket of selector lever cable aligns with ball head of selector shaft lever.

– Hold support bracket in this position and tighten bolts -arrows- securing support bracket.

– Press selector lever cable -1- onto selector shaft lever -2-.

– Install multi-function switch -F125- ⇒ page 101 .

– Check selector mechanism ⇒ page 25 .

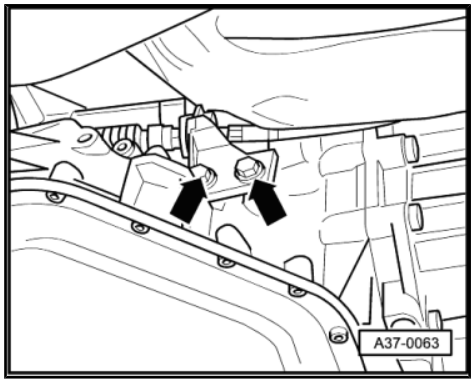

Tightening torques

Component		Nm
Support bracket for selector lever cable to gearbox		23
Heat shield for selector lever cable to gearbox (8-cylinder: with exhaust system bracket)	M6	9
	M8	23

1.6 Removing and installing locking cable

1 - Locking cable

Removing

Note

The locking cable must not be bent or kinked.

– Shift selector lever to position “2” or “S”.

Caution

On vehicles with telematics: activate service mode of telematics control unit before disconnecting battery ⇒ Communication, self-diagnosis; Rep. Gr. 01 .

– Refer to coding on vehicles with encoded radio/ radio navigation system (RNS); obtain coding if necessary.

– Disconnect earth strap on battery (in luggage compartment) with ignition switched off.

– Remove driver's storage compartment ⇒ Rep. Gr. 68 .

– Remove centre console ⇒ Rep. Gr. 68 .

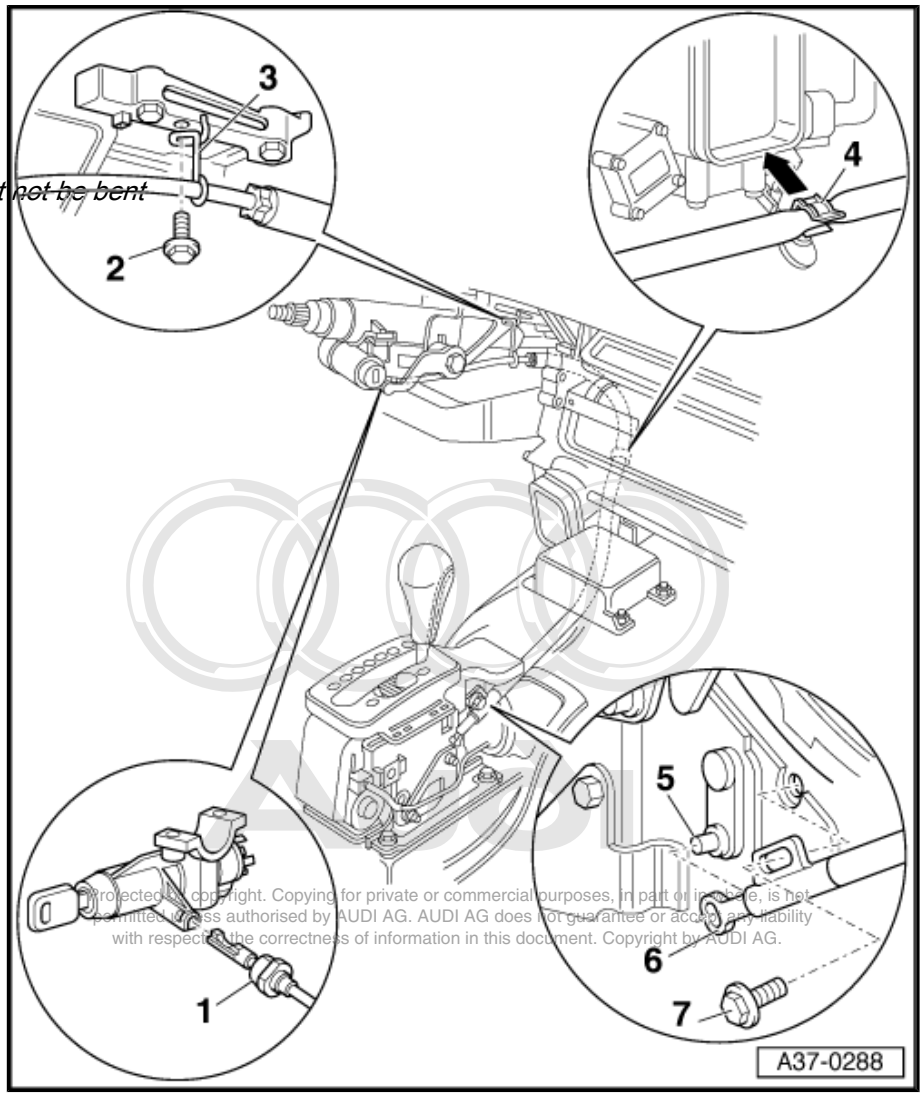

Protected by copyright. Copying for private or commercial purposes, in part or in whole, is not permitted unless authorised by AUDI AG. AUDI AG does not guarantee or accept any liability with respect to the correctness of information in this document. Copyright by AUDI AG.

– Remove steering column switch ⇒ Rep. Gr. 94 .

– Turn ignition key to “ignition on” position.

– Shift selector lever into “P” position.

– Lift locking clip on locking device and pull locking cable -1- out of ignition/starter switch.

– Unbolt locking cable support bracket from gear selector mechanism and disengage locking cable eye -6-.

– Slacken bolt -2- on steering column and remove locking cable together with wire retainer -3-.

– Unbolt airbag control unit ⇒ Rep. Gr. 69 .

– Release locking cable from retaining clip -4- and remove.

Installing

– Route locking cable so it is free of kinks.

– Locate locking cable along groove in insulating material on gearbox tunnel, and fit airbag control unit ⇒ Rep. Gr. 69 .

- Turn ignition key to “ignition on” position.
- Insert locking cable -1- into starter switch.
- Engage locking clip on locking device.
- Tighten bolt -2- for wire retainer -3-.
- Turn ignition/starter switch to locked position (“ignition off”).
- Shift selector lever into “P” position.
- Hook eye of locking cable -6- onto pin -5-.
- Loosely tighten bolt -7- for locking cable support bracket at selector mechanism.
- Adjust locking cable ⇒ page 38 .

The remaining installation steps are carried out in reverse sequence; note the following:

Note

- *When reconnecting battery, remember to activate vehicle equipment (radio/navigation system (RNS), clock, electric windows) according to Owner's Manual.*
- *On vehicles with telematics: deactivate service mode of telematics control unit ⇒ Communication, self-diagnosis; Rep. Gr. 01*
- *For further procedures after reconnecting voltage supply ⇒ Rep. Gr. 24 .*

Protected by copyright. Copying for private or commercial purposes, in part or in whole, is not permitted unless authorised by AUDI AG. AUDI AG does not guarantee or accept any liability with respect to the correctness of information in this document. Copyright by AUDI AG.

Tightening torque

Component	Nm
Wire retainer to steering column	9

1.7 Adjusting locking cable

Special tools and workshop equipment required

- Locking cable adjustment gauge -3352 A-

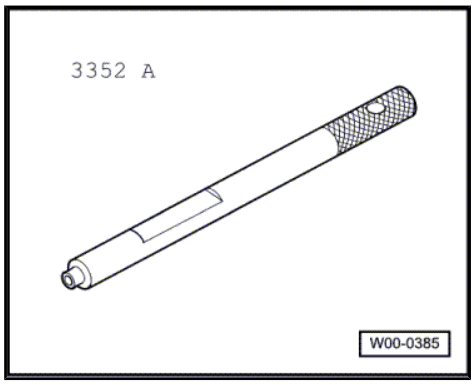

Procedure

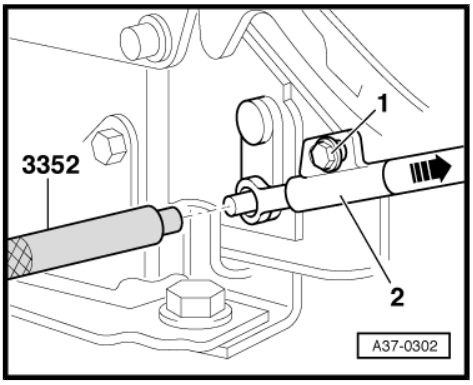

– Slacken bolt -1-.

• It should be possible to move support bracket -2- for locking cable by hand.

– Insert the locking cable adjustment gauge -3352 A- between the pin on the locking cable lever and the locking cable eye.

– Pull locking cable in direction of -arrow- and tighten bolt.

– Remove adjustment gauge.

– Always check the ignition key removal lock after adjusting locking cable ⇒ page 25 .

Tightening torque

Component	Nm
Support bracket for locking cable to selector mechanism	9

Protected by copyright. Copying for private or commercial purposes, in part or in whole, is not permitted unless authorised by AUDI AG. AUDI AG does not guarantee or accept any liability with respect to the correctness of information in this document. Copyright by AUDI AG.

2 Removing and installing gearbox

2.1 Removing gearbox - vehicles with 6-cylinder petrol engine

Special tools and workshop equipment required

- Support bracket -10-222 A- with 2x adapters -10-222 A/ 4-
- Removal lever -80-200-
- Retainer -3180-
- Gearbox support -3282-
- Adjustment plate -3282/19-
- Engine and gearbox jack - V.A.G 1383 A-

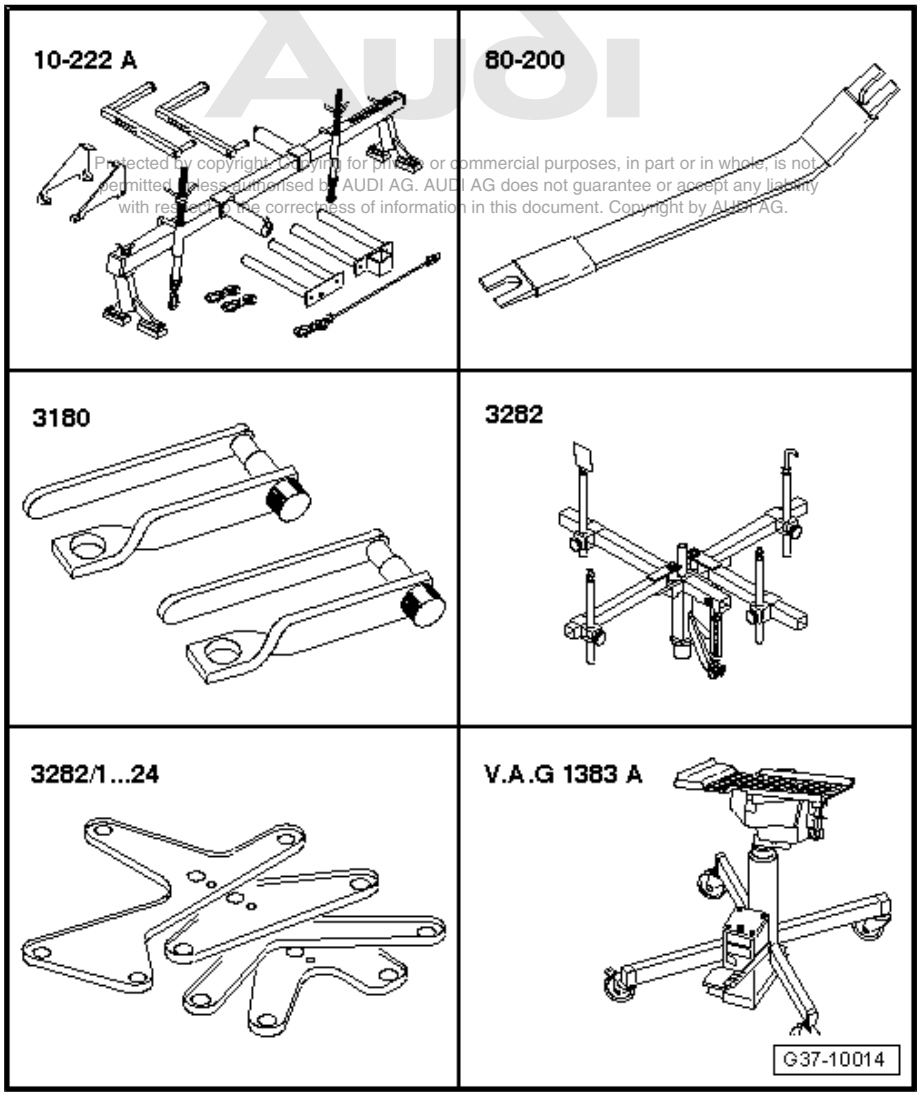

Protected by copyright. Copying for private or commercial purposes, in part or in whole, is not permitted unless authorised by AUDI AG. AUDI AG does not guarantee or accept any liability with respect to the correctness of information in this document. Copyright by AUDI AG.

- Support bridge -30-211 A-

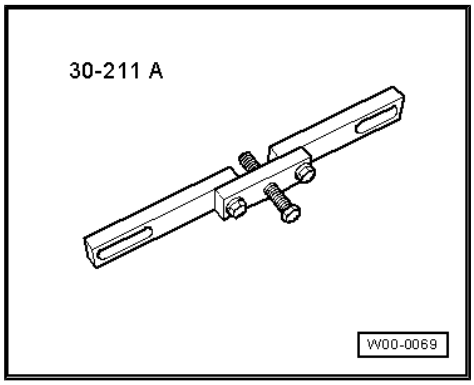

- Support (commercially available)

Procedure

Caution

- *Contact corrosion! Notes ⇒ page 16 .*
- *On vehicles with telematics: activate service mode of telematics control unit before disconnecting battery ⇒ Communication, self-diagnosis; Rep. Gr. 01 .*

Protected by copyright. Copying for private or commercial purposes, in part or in whole, is not permitted unless authorised by AUDI AG. AUDI AG does not guarantee or accept any liability with respect to the correctness of information in this document. Copyright by AUDI AG.

– Refer to coding on vehicles with encoded radio/radio navigation system (RNS); obtain coding if necessary.

– Disconnect earth strap on battery (in luggage compartment) with ignition switched off.

– Release hose clips -1- and -2- and remove air intake pipe.

– Remove centre engine cover panel -arrows-.

– Remove air ducts -3- and -4-.

– Remove front exhaust pipes (left and right) with catalytic converters ⇒ Rep. Gr. 26 .

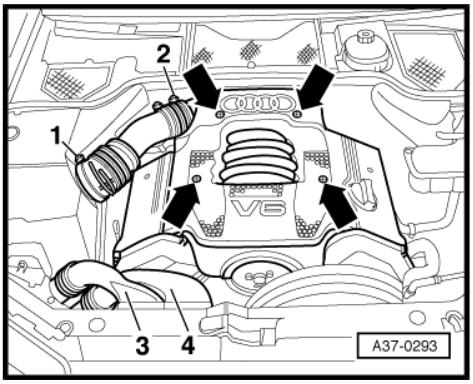

– Remove covers -1 … 4-.

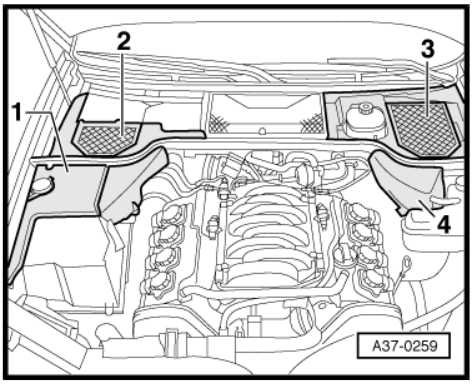

Vehicles with throttle cable:

– Detach vacuum hose -2- from cruise control vacuum unit.

– Remove bolts -1- and move vacuum unit clear to one side.

All models:

– Unplug electrical connector at injector (rear left).

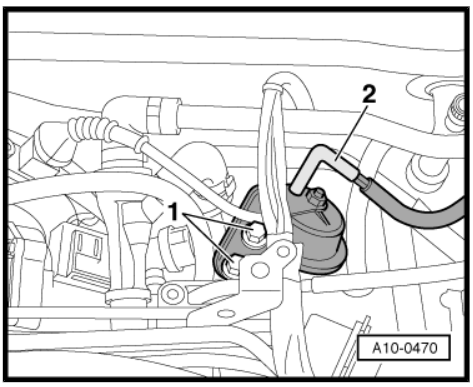

– Set up support bracket -10-222 A- with 2x adapters -10-222 A/ 4- and spindle.

• The spindle is positioned behind the support bracket.

– Position support bracket -10-222 A- onto bolts on suspension strut mountings and check stability.

– Fit retainer -3180- and hook up support bracket.

– Tighten spindle slightly, but do not take up weight of engine.

– Remove poly V-belt ⇒ Rep. Gr. 13 .

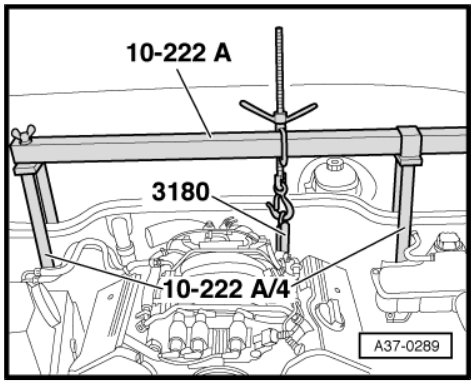

– Remove both front wheels.

– On vehicles fitted with auxiliary heater, remove screws -arrows- securing exhaust pipe of auxiliary/ additional heater to noise insulation.

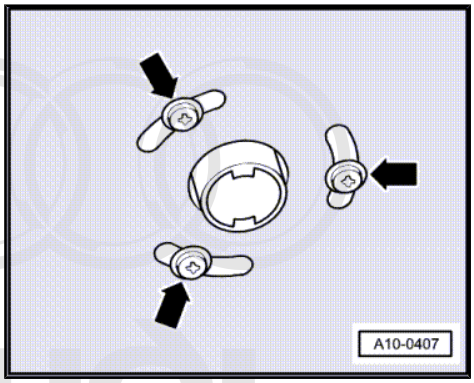

– Remove noise insulation panel -arrows-.

Protected by copyright. Copying for private or commercial purposes, in part or in whole, is not permitted unless authorised by AUDI AG. AUDI AG does not guarantee or accept any liability with respect to the correctness of information in this document.

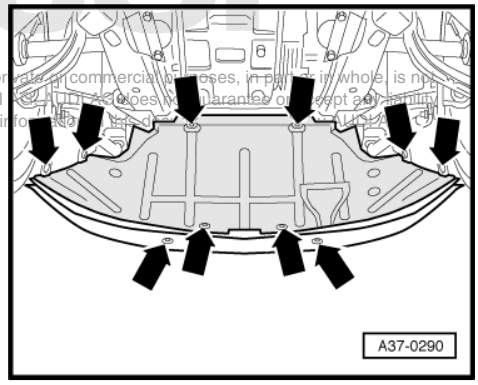

– Unbolt bracket for noise insulation -arrows-.

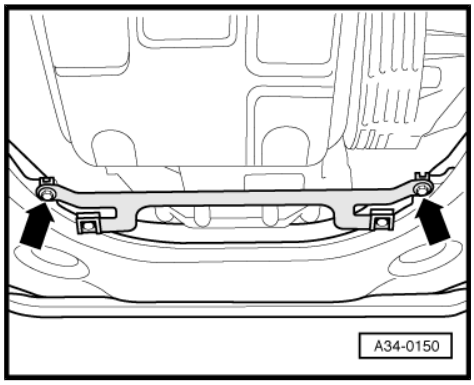

– Unclip air duct of alternator -arrows-.

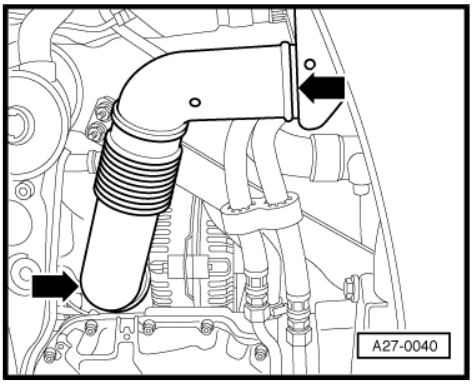

– Remove bolt -2-.
– Slacken nut -1-.
– Move alternator to side and unplug electrical connectors.

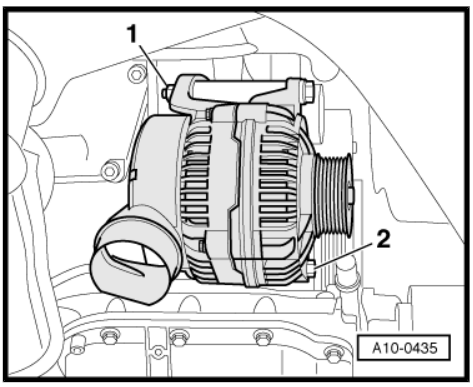

– Move alternator forwards and place it between ATF oil pan and body strut -arrow-.

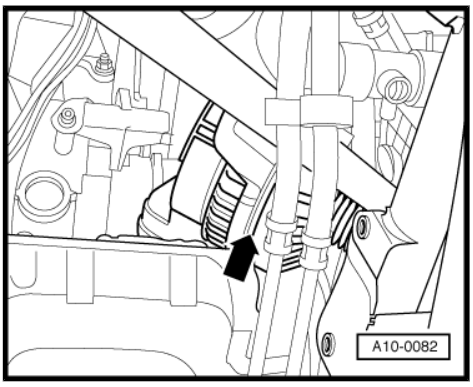

Protected by copyright. Copying for private or commercial purposes, in part or in whole, is not permitted unless authorised by AUDI AG. AUDI AG does not guarantee or accept any liability with respect to the correctness of information in this document. Copyright by AUDI AG.

– Disconnect electrical wiring -1- and -2- at starter and detach insulator from positive terminal of starter.
– Remove starter retaining bolts -arrows- from gearbox side.
– Unscrew clamp on right side of ATF oil pan (top section) and move wiring clear.
– Take starter out from underneath through space between ATF oil pan and body strut; leave alternator in vehicle.

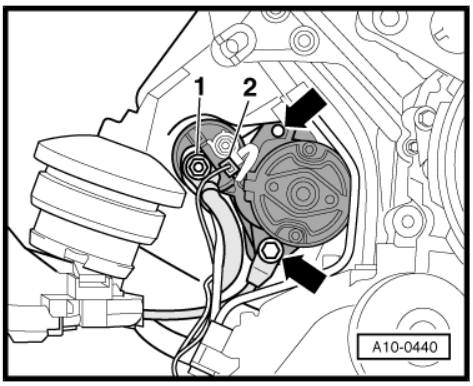

– Unscrew 3 torque converter bolts -arrow- through starter opening (turn crankshaft $^{1}/_{3}$ turn each time).

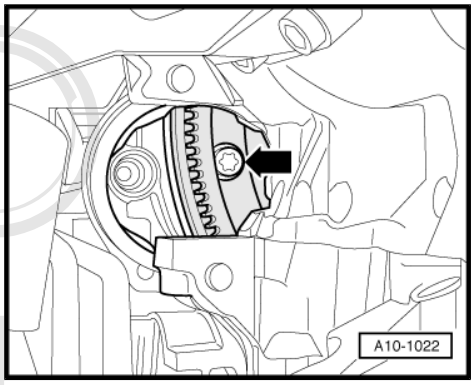

Note

To slacken the torque converter bolts, counter-hold the main bolt on the vibration damper.

– Unscrew heat shield -arrows- for drive shaft (left and right).
– Unbolt drive shafts (left and right) from gearbox flange shafts ⇒ Rep. Gr. 40 .

Protected by copyright. Copying for private or commercial purposes, in part or in whole, is not permitted unless authorised. All rights reserved. No guarantee or accept any liability with respect to the correctness of information in this document. Copyright by AUDI AG.

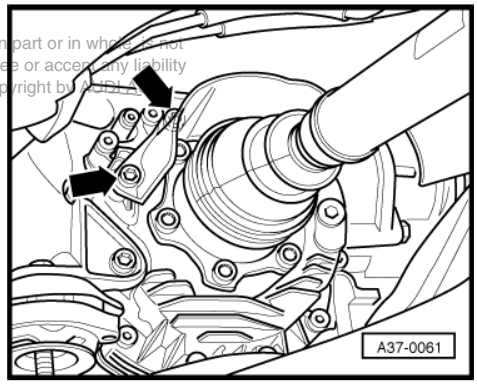

Vehicles with four-wheel drive:

– If fitted, remove cross member -arrows-.
– Detach rear section of exhaust system -1- and remove.

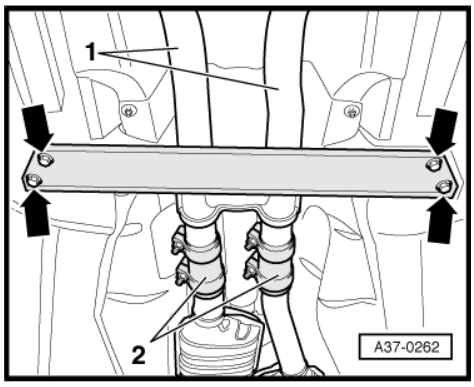

Note

-Item 2- can be disregarded.

– Before removing, check position of constant velocity joint on propshaft in relation to flange for propshaft on rear final drive and mark position for reinstallation if necessary.
– Remove propshaft ⇒ page 186 .

All models:

– Unbolt heat shield -1- for selector lever cable on left of gearbox -arrows-.
– Remove 3 bottom bolts securing engine and gearbox.

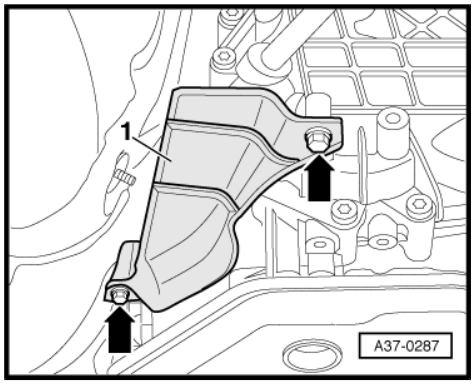

– Turn locking lever -1- and unplug electrical connector for gearbox wiring harness.
– Unplug electrical connector -2- of multi-function switch -F125- .
– Unbolt bracket -3- for connector and guide out connector with bracket from underneath.

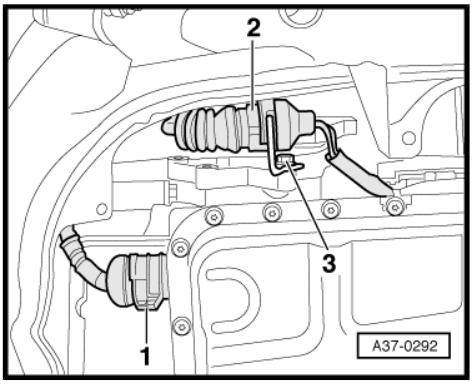

– Unbolt brackets for ATF pipes -arrows-.

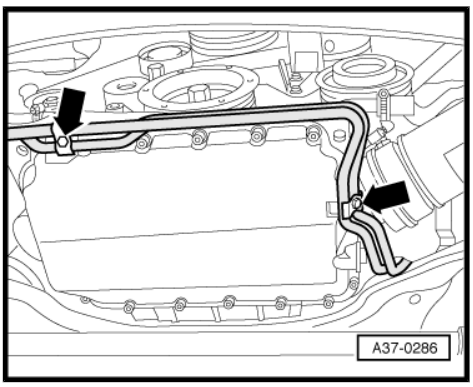

– Unbolt engine speed sender -G28- -item 1- from front left of gearbox.
– Detach electrical connector -2- from speedometer sender -G22- .

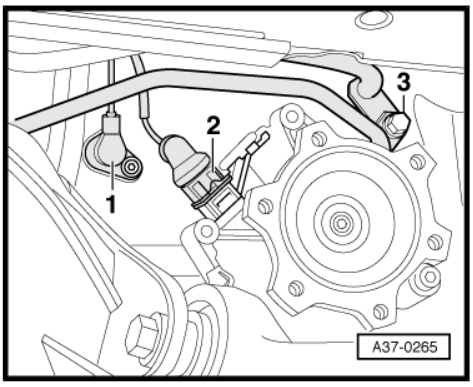

Note

Observe rules for cleanliness when working on automatic gearbox *⇒ page 19* *.*

– Remove bolt -3- and detach ATF pipes from gearbox.
– Move ATF pipes clear to one side.

– To remove automatic gearbox 01V set up gearbox support -3282- with adjustment plate -3282/19- and place on engine and gearbox jack -V.A.G 1383 A- .
– Fit support elements.

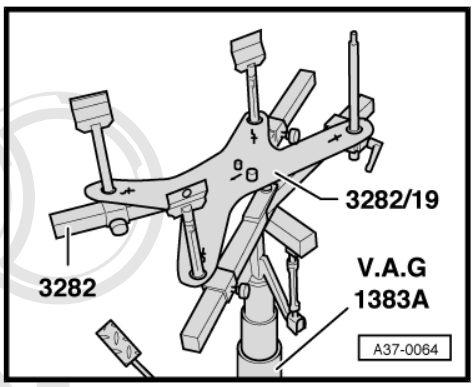

Note

- *The symbols on the adjustment plate -3282/19- indicate the positions of the support elements (arrow points forwards).*
- *The adjustment plate can only be fitted in one position.*

Protected by copyright. Copying for private or commercial purposes, in part or in whole, is not permitted unless authorised by AUDI AG. AUDI AG does not guarantee or accept any liability with respect to the correctness of information in this document. Copyright by AUDI AG.

– Place engine and gearbox jack -1383 A- with gearbox support -3282- underneath gearbox and position adjustment plate so it is parallel with gearbox.
– Secure support elements to left and right side of gearbox.
– Remove left and right gearbox supports ⇒ page 73 .

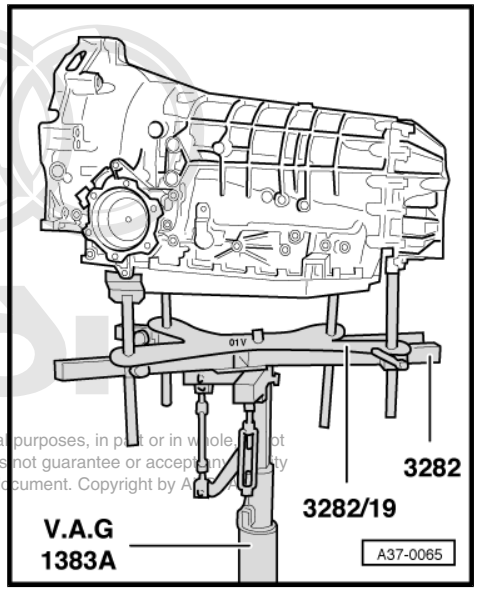

Protected by copyright. Copying for private or commercial purposes, in part or in whole, is not permitted unless authorised by AUDI AG. AUDI AG does not guarantee or accept any liability with respect to the correctness of information in this document. Copyright by AUDI AG.

– Unscrew multi-function switch -F125- to protect it from damage -arrows- and move wiring harness clear.

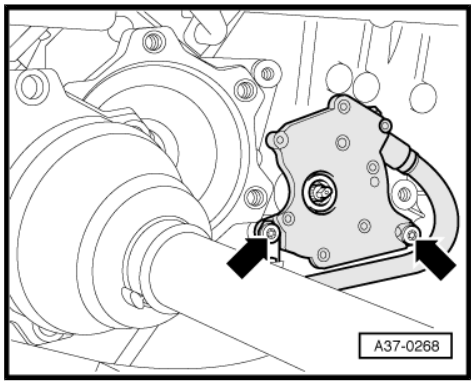

– Use removal lever -80-200- to prise selector lever cable -1- off selector shaft lever -2- (remove retaining clip -arrow- if fitted).

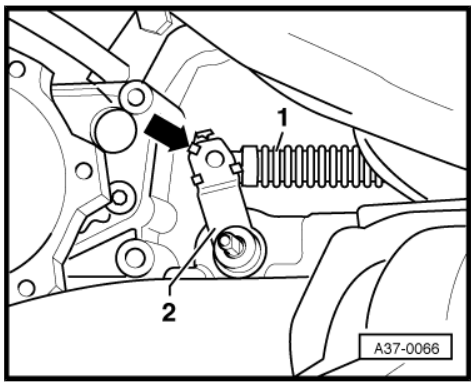

– If necessary, mark position of selector lever cable support bracket on gearbox housing for later installation, and unbolt support bracket -arrows-.

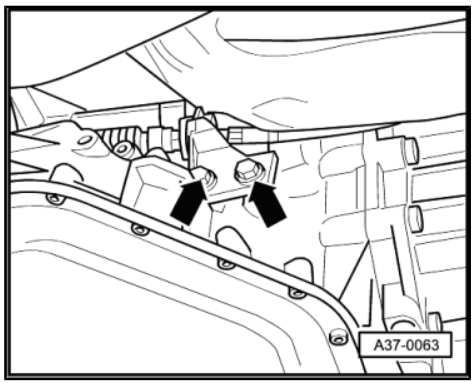

– Remove bolts -1- and -2- at rear of subframe.

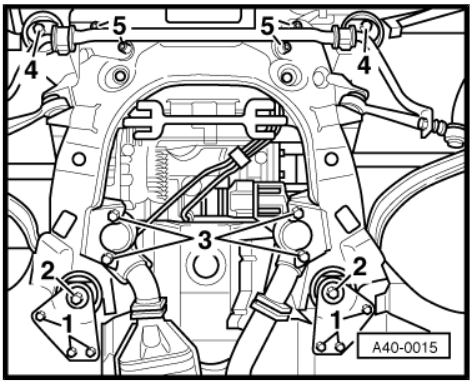

• The subframe should be lowered by -a- = approx. 80 mm from the mounting point on the body.

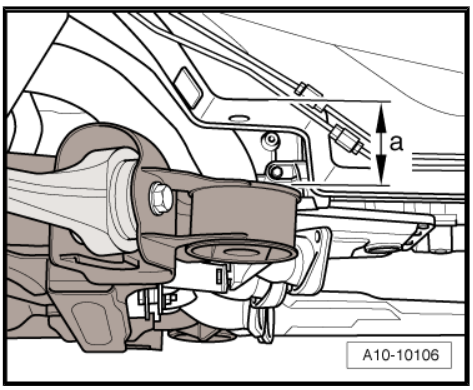

Note

If necessary, reduce tension at spindle of support bracket -10-222 A- .

– Lower gearbox slightly at the rear.

– Move drive shafts clear to the front.

Note

Make sure you do not damage surface coating on drive shafts.

– Support engine at front with commercially available support.

– Remove top engine/gearbox securing bolts.

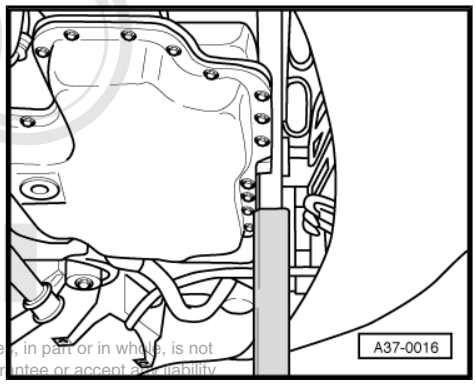

Protected by copyright. Copying for private or commercial purposes, in part or in whole, is not permitted unless authorised by AUDI AG. AUDI AG does not guarantee or accept any liability with respect to the correctness of information in this document. Copyright by AUDI AG.

– Press gearbox off engine and at the same time press torque converter out of drive plate.

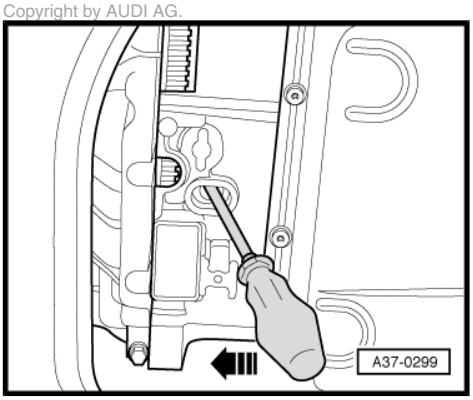

– Lower rear of engine/gearbox assembly slightly with engine and gearbox jack -V.A.G 1383 A- -arrow-.
– Guide the gearbox out diagonally downwards/to the rear.
• Subframe has been lowered by a distance of -a- = approx. 80 mm.

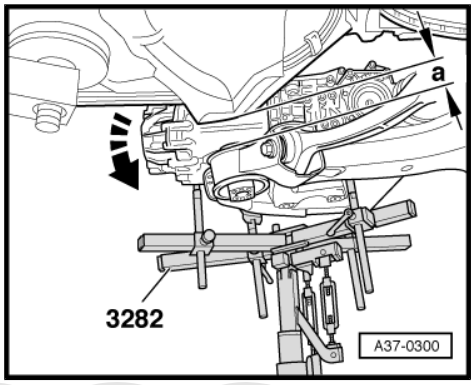

Note

Ensure that there is sufficient room between bulkhead and engine.

– Secure torque converter in gearbox with support bridge -30-211 A- to prevent it dropping out.

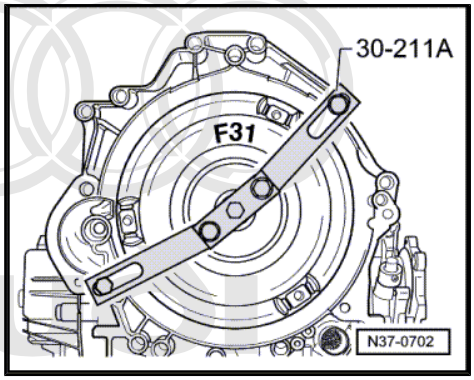

Protected by copyright. Copying for private or commercial purposes, in part or in whole, is not permitted unless authorised by AUDI AG. AUDI AG does not guarantee or accept any liability with respect to the correctness of information in this document. Copyright by AUDI AG.

2.2 Removing gearbox - vehicles with 8-cylinder engine

Special tools and workshop equipment required

- Support bracket -10-222 A- with 2x adapters -10-222 A/ 4-
- Removal lever -80-200-
- Retainer -3180-
- Gearbox support -3282-
- Adjustment plate -3282/19-
- Engine and gearbox jack - V.A.G 1383 A-

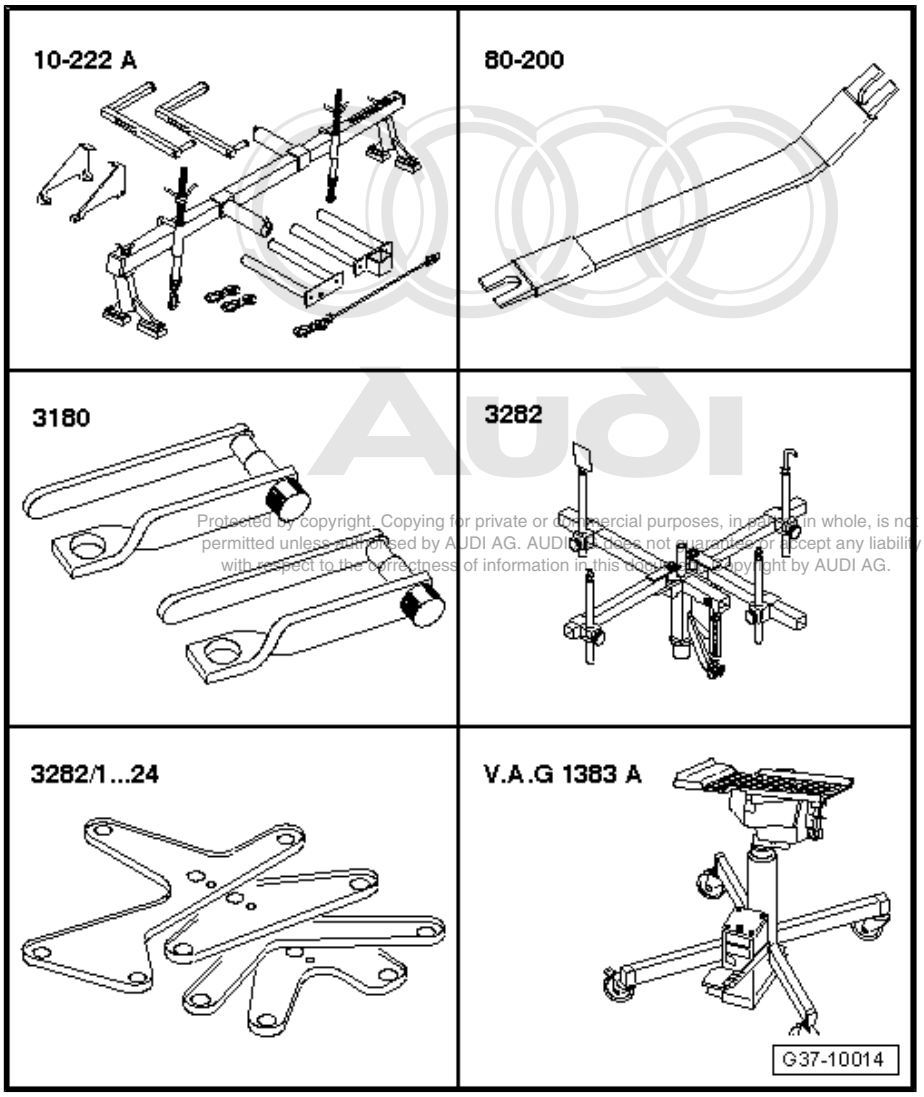

Protected by copyright. Copying for private or commercial purposes, in part or in whole, is not permitted unless authorised by AUDI AG. AUDI AG does not guarantee or accept any liability with respect to the correctness of information in this document. Copyright by AUDI AG.

- Support bridge -30-211 A-

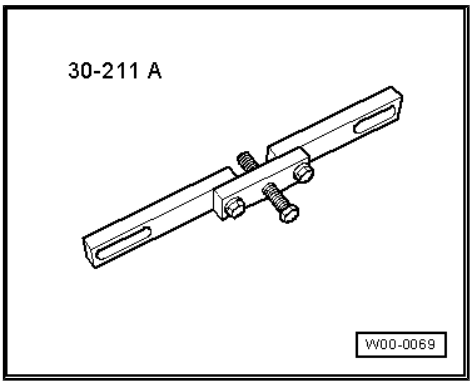

- Support (commercially available)

Procedure

Caution

- *Contact corrosion! Notes ⇒ page 16 .*
- *On vehicles with telematics: activate service mode of telematics control unit before disconnecting battery ⇒ Communication, self-diagnosis; Rep. Gr. 01 .*

– Refer to coding on vehicles with encoded radio/radio navigation system (RNS); obtain coding if necessary.

– Disconnect earth strap on battery (in luggage compartment) with ignition switched off.

– Release hose clips -1- and -2- and remove air intake pipe.

– Remove engine cover panels (side -arrows- and centre -3-).

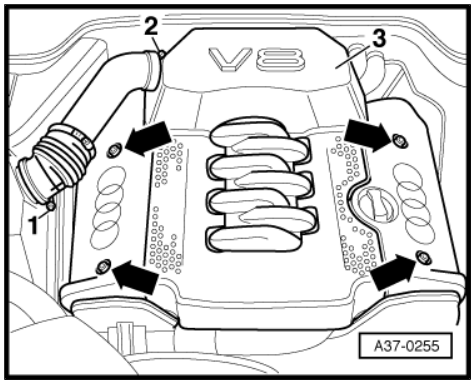

– Detach intake hose -arrow- at throttle valve module -J338- and pull off connection for crankcase breather.

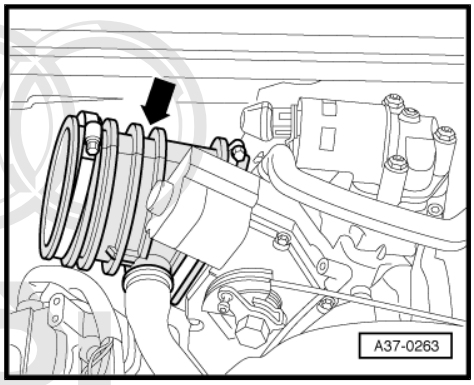

– Unclip cover -2- for air duct at lock carrier.

– Remove air duct -1-.

Protected by copyright. Copying for private or commercial purposes, in part or in whole, is not permitted unless authorised by AUDI AG. AUDI AG does not guarantee or assume any liability with respect to the correctness of information in this document. Copyright by AUDI AG.

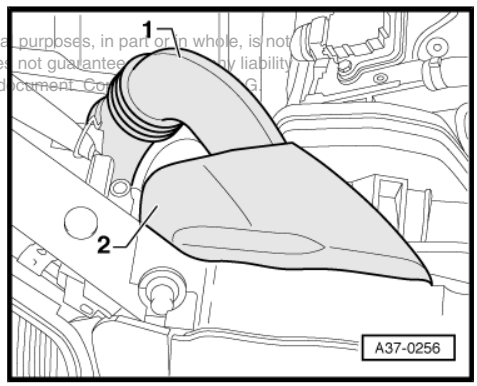

– Remove bolts -arrows- on radiator cowl -1-.
– Disengage radiator cowl at the bottom and allow cowl to rest on top of fan.
– Remove front exhaust pipes (left and right) with catalytic converters ⇒ Rep. Gr. 26 .

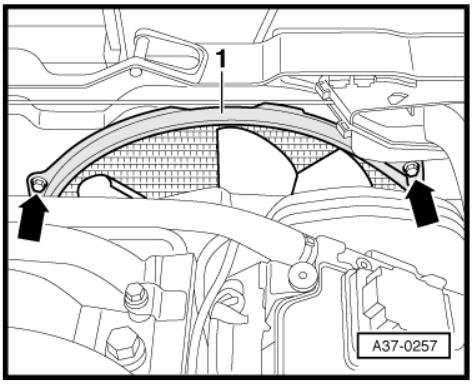

– Unplug electrical connectors -1- and -6- for knock sensors.
– Disconnect vacuum hose -3- from fuel pressure regulator.

Vehicles with throttle cable:

– Unscrew connecting rod -2- for cruise control system at throttle valve unit.
– Detach vacuum hose -4- at vacuum unit for cruise control system.
– Disengage throttle cable at support bracket -5-.

All models:

– Unplug electrical connectors from injectors.
– Remove bolts -7- and -8- on fuel rail and detach fuel rail together with injectors.
– Move fuel rail clear to rear.
– Close off openings for injectors with clean cloths.

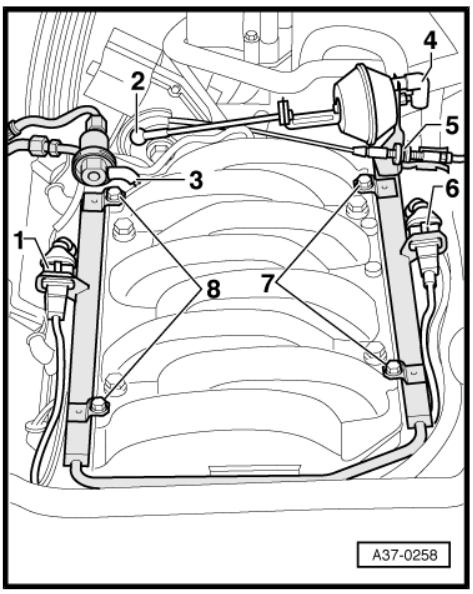

– Remove covers -1 … 4-.

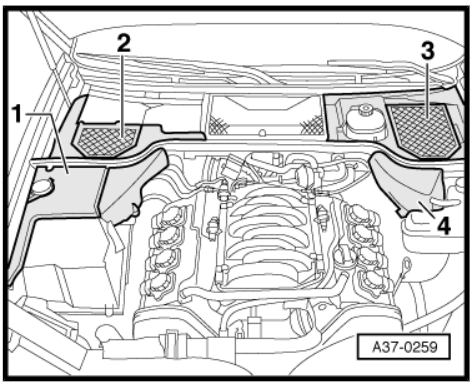

– Set up support bracket -10-222 A- with 2x adapters -10-222 A/4- and spindles.
• Left spindle behind support bracket, right spindle in front of support bracket.
– Position support bracket -10-222 A- onto bolts on suspension strut mountings and check stability.
– Fit retainers -3180- : insert left-hand pin into eye from rear, insert right-hand pin into eye from front and secure.
– Tighten spindles slightly, but do not take up weight of engine.

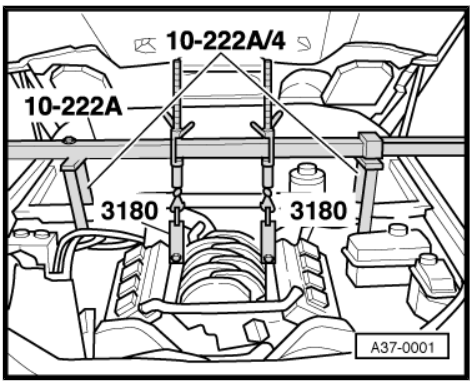

Protected by copyright. Copying for private or commercial purposes, in part or in whole, is not permitted unless authorised by AUDI AG. AUDI AG does not guarantee or assume any liability with respect to the correctness of information in this document. Copyright by AUDI AG.

– Remove front wheels.

– On vehicles fitted with auxiliary heater, remove screws -arrows- securing exhaust pipe of auxiliary/ additional heater to noise insulation.

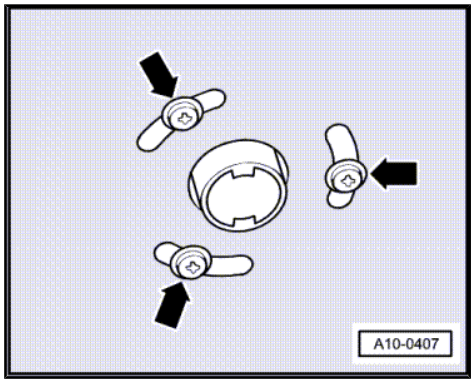

– Undo quick-release fasteners -arrows- and remove noise insulation.

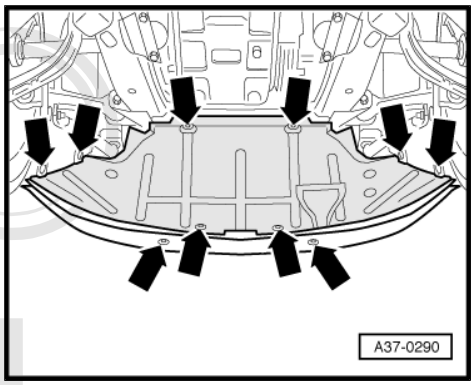

– Unbolt bracket for noise insulation -arrows-.

– Unclip air duct of alternator.

Protected by copyright. Copying for private or commercial purposes, in part or in whole, is not permitted unless authorised by AUDI AG. AUDI AG does not guarantee or accept any liability with respect to the correctness of information in this document. Copyright by AUDI AG.

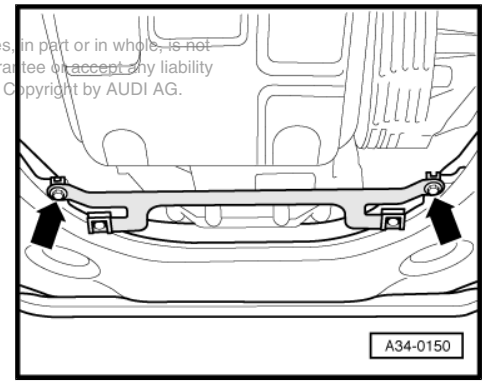

– Remove bolts -arrows- at torque reaction support (front right).

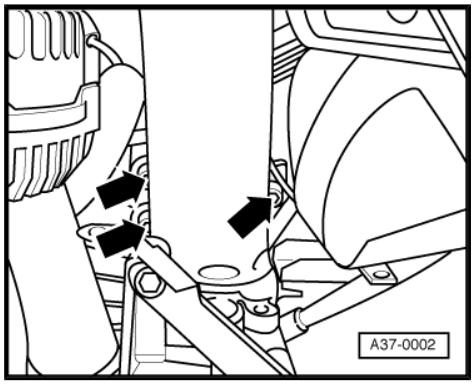

– Unscrew heat shield -arrows- for drive shaft (left and right).

– Unbolt drive shafts (left and right) from gearbox flange shafts ⇒ Rep. Gr. 40 .

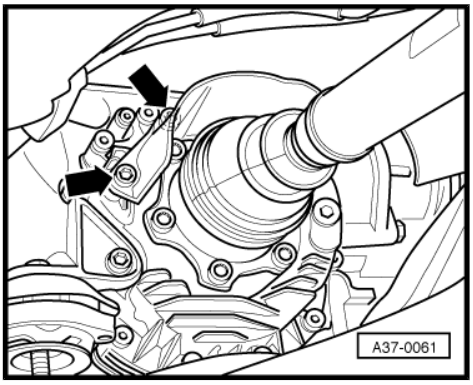

Vehicles with four-wheel drive:

– If fitted, remove cross member -arrows-.

– Detach rear section of exhaust system -1- and remove.

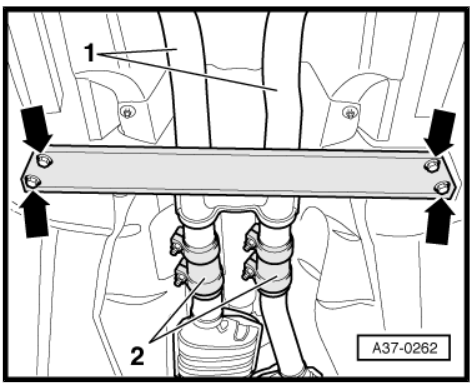

Note

-Item 2- can be disregarded.

Protected by copyright. Copying for private or commercial purposes, in part or in whole, is not permitted unless authorised by AUDI AG. AUDI AG does not guarantee or accept any liability with respect to the correctness of information in this document. Copyright by AUDI AG.

– Before removing, check position of constant velocity joint on propshaft in relation to flange for propshaft on rear final drive and mark position for reinstallation if necessary.

– Remove propshaft ⇒ page 186 .

All models:

– If fitted, remove heat shield -1- for selector lever cable on left of gearbox together with exhaust system bracket -2- from below gearbox -arrows-.

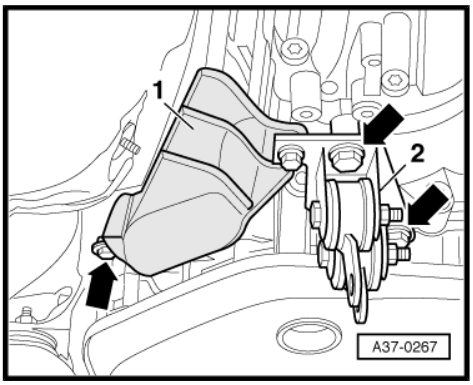

– Remove bottom bolts -arrows- at engine mountings.

– Lift the engine on the spindles until the guide lugs of both engine mountings are clear of the subframe.

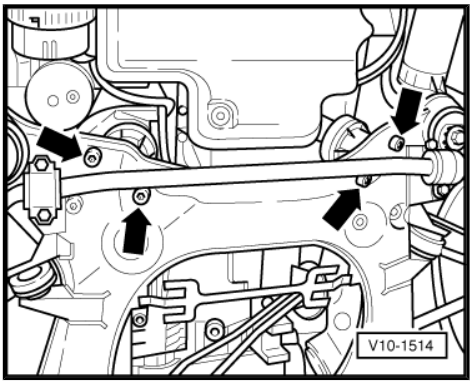

Note

Make sure that the insulating material on the bulkhead is not damaged by the throttle valve unit.

– Unscrew clamp -2- at longitudinal member (right-side).
– Unscrew earth cable -1- from engine.

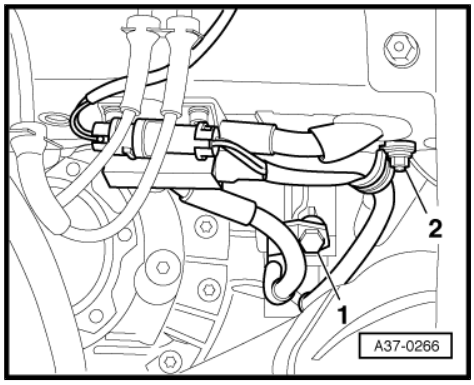

– Unscrew cable clamps and engine support (right-side) -arrows-.
– Take the engine support out between the two lower transverse links.

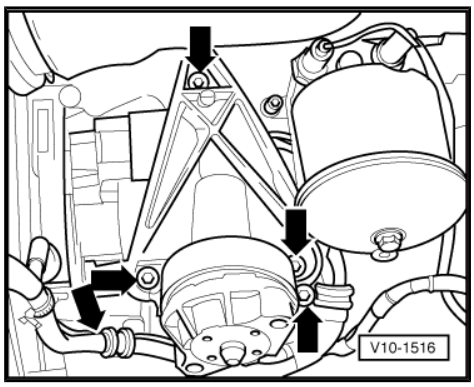

– Unbolt wiring at starter.
– Remove securing bolts on starter -arrows-.
– Lift starter out past drive shaft between transverse links.

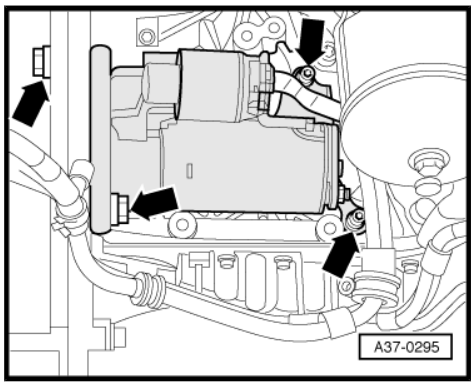

– Unscrew 3 torque converter bolts -arrow- through starter opening (turn crankshaft $^{1}/_{3}$ turn each time).

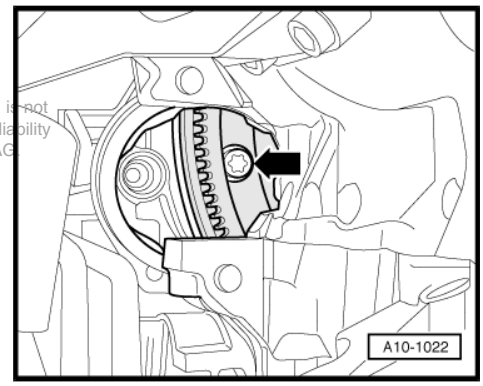

Protected by copyright. Copying for private or commercial purposes, in part or in whole, is not permitted unless authorised by AUDI AG. AUDI AG does not guarantee or accept any liability with respect to the correctness of information in this document. Copyright by AUDI AG.

Note

To slacken the torque converter bolts, counter-hold the main bolt on the vibration damper.

– Remove 3 bottom bolts securing engine and gearbox.
– Lower the engine until it is possible to bolt on the left engine mounting. Only tighten the bolt loosely.

Note

The torque reaction support can damage the headlight housing if the engine is lowered too far on the right side.

– Turn locking lever -1- and unplug electrical connector for gearbox wiring harness.
– Unplug electrical connector -2- of multi-function switch -F125- .
– Unbolt bracket -3- for connector and guide out connector with bracket from underneath.

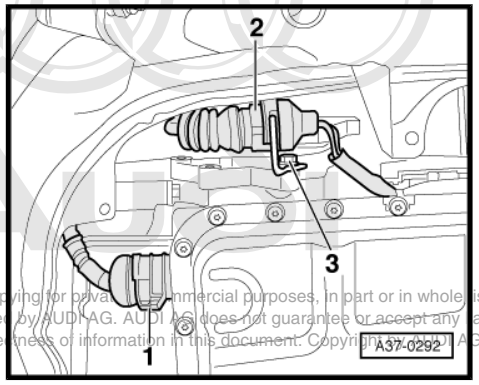

Protected by copyright. Copying for private or commercial purposes, in part or in whole, is not permitted unless authorised by AUDI AG. AUDI AG does not guarantee or accept any liability with respect to the correctness of information in this document. Copyright by AUDI AG.

– Unbolt engine speed sender -G28- -item 1- from front left of gearbox.
– Detach electrical connector -2- from speedometer sender -G22- .
– Unbolt bracket for ATF pipe from left engine mounting.

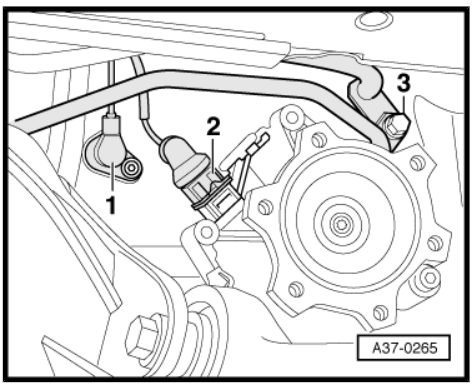

Note

Observe rules for cleanliness when working on automatic gearbox *⇒ page 19* *.*

– Remove bolt -3- and detach ATF pipes from gearbox.
– Move ATF pipes clear to one side.

– To remove automatic gearbox 01V set up gearbox support -3282- with adjustment plate -3282/19- and place on engine and gearbox jack -V.A.G 1383 A- .
– Fit support elements.

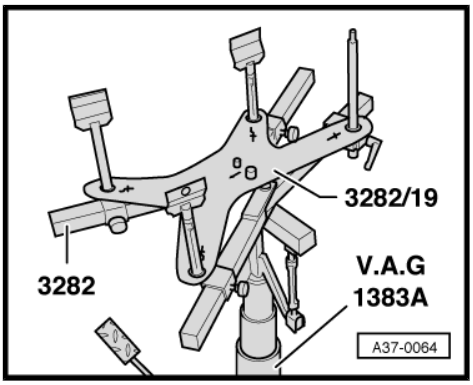

Note

- *The symbols on the adjustment plate -3282/19- indicate the positions of the support elements (arrow points forwards).*
- *The adjustment plate can only be fitted in one position.*

– Place engine and gearbox jack -1383 A- with gearbox support -3282- underneath gearbox and position adjustment plate so it is parallel with gearbox.
– Secure support elements to left and right side of gearbox.
– Remove left and right gearbox supports ⇒ page 73 .

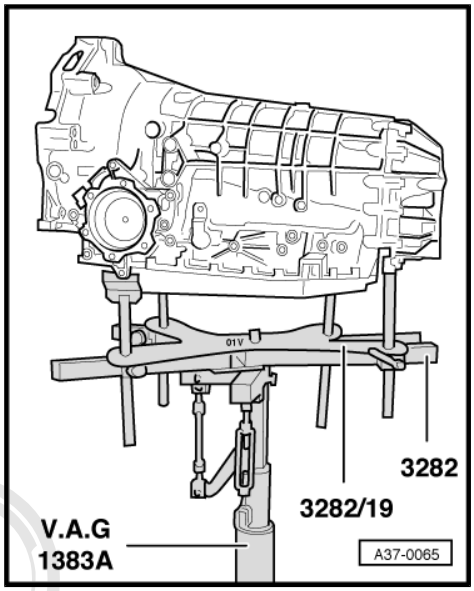

– Unscrew multi-function switch -F125- to protect it from damage -arrows- and move wiring harness clear.

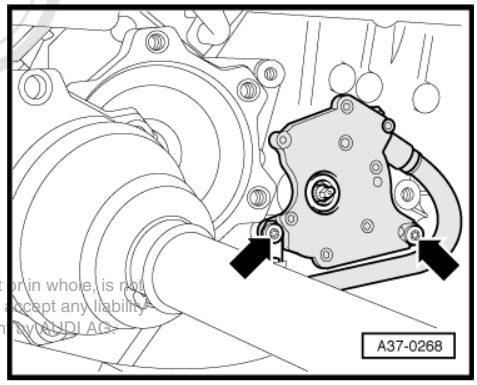

Protected by copyright. Copying for private or commercial purposes, in part or in whole, is not permitted unless authorised by AUDI AG. AUDI AG does not guarantee or accept any liability with respect to the correctness of information in this document. Copyright by AUDI AG.

– Use removal lever -80-200- to prise selector lever cable -1- off selector shaft lever -2- (remove retaining clip -arrow- if fitted).

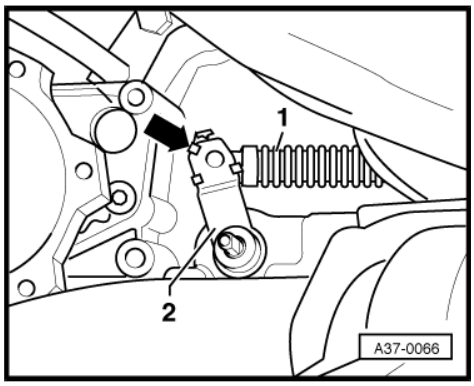

– If necessary, mark position of selector lever cable support bracket on gearbox housing for later installation, and unbolt support bracket -arrows-.

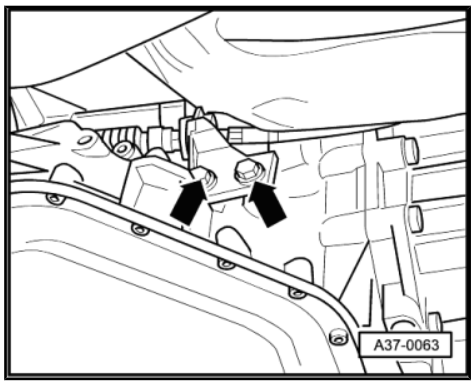

– Remove bolts -1- and -2- at rear of subframe.

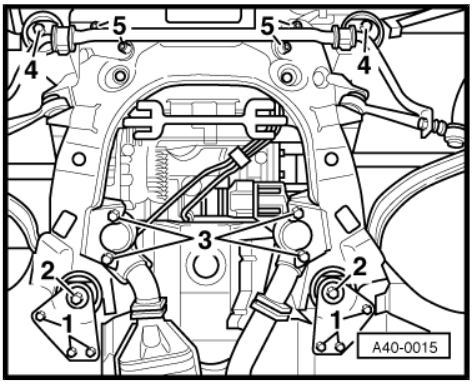

• The subframe should be lowered by -a- = approx. 80 mm from the mounting point on the body.

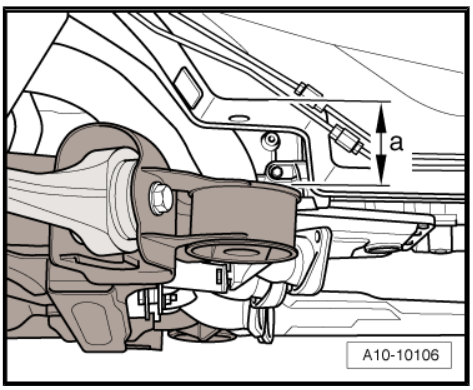

Note

If necessary, reduce tension at spindle of support bracket -10-222 A- . Make sure that the torque reaction support does not damage the headlight housing.

Protected by copyright. Copying for private or commercial purposes, in part or in whole, is not permitted unless authorised by AUDI AG. AUDI AG does not guarantee or accept any liability with respect to the correctness of information in this document. Copyright by AUDI AG.

– Lower gearbox slightly at the rear.

– Move drive shafts clear to the front.

Note

Make sure you do not damage surface coating on drive shafts.

– Support engine at front with commercially available support.

– Remove top engine/gearbox securing bolts.

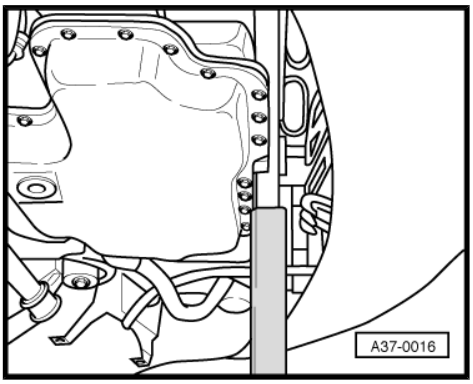

– Press gearbox off engine and at the same time press torque converter out of drive plate.

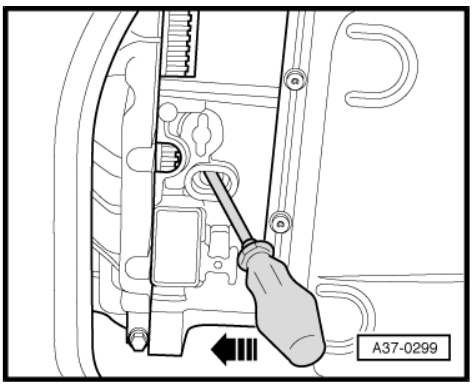

– Lower rear of engine/gearbox assembly slightly with engine and gearbox jack -V.A.G 1383 A- -arrow-.
– Guide the gearbox out diagonally downwards/to the rear.
• Subframe has been lowered by a distance of -a- = approx. 80 mm.

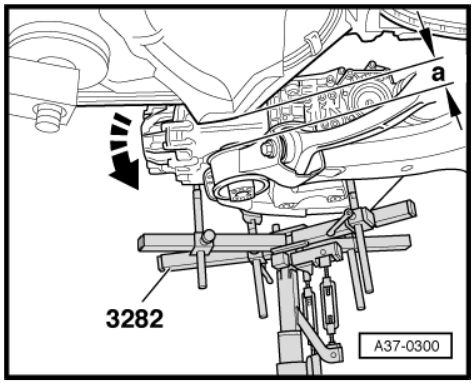

Note

Ensure adequate clearance between bulkhead and engine.

– Secure torque converter in gearbox with support bridge -30-211 A- to prevent it dropping out.

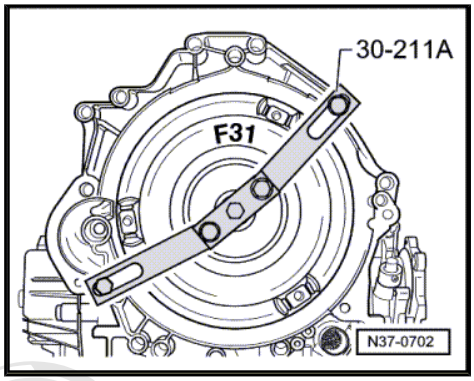

Protected by copyright. Copying for private or commercial purposes, in part or in whole, is not permitted unless authorised by AUDI AG. AUDI AG does not guarantee or accept any liability with respect to the correctness of information in this document. Copyright by AUDI AG.

2.3 Removing gearbox - vehicles with 6-cylinder TDI engine

Special tools and workshop equipment required

- Support bracket -10-222 A- with 2x adapters -10-222 A/4-
- Removal lever -80-200-
- Gearbox support -3282-
- Adjustment plate -3282/19-
- Engine and gearbox jack -V.A.G 1383 A-
- Support bridge -30-211 A-
- Support (commercially available)

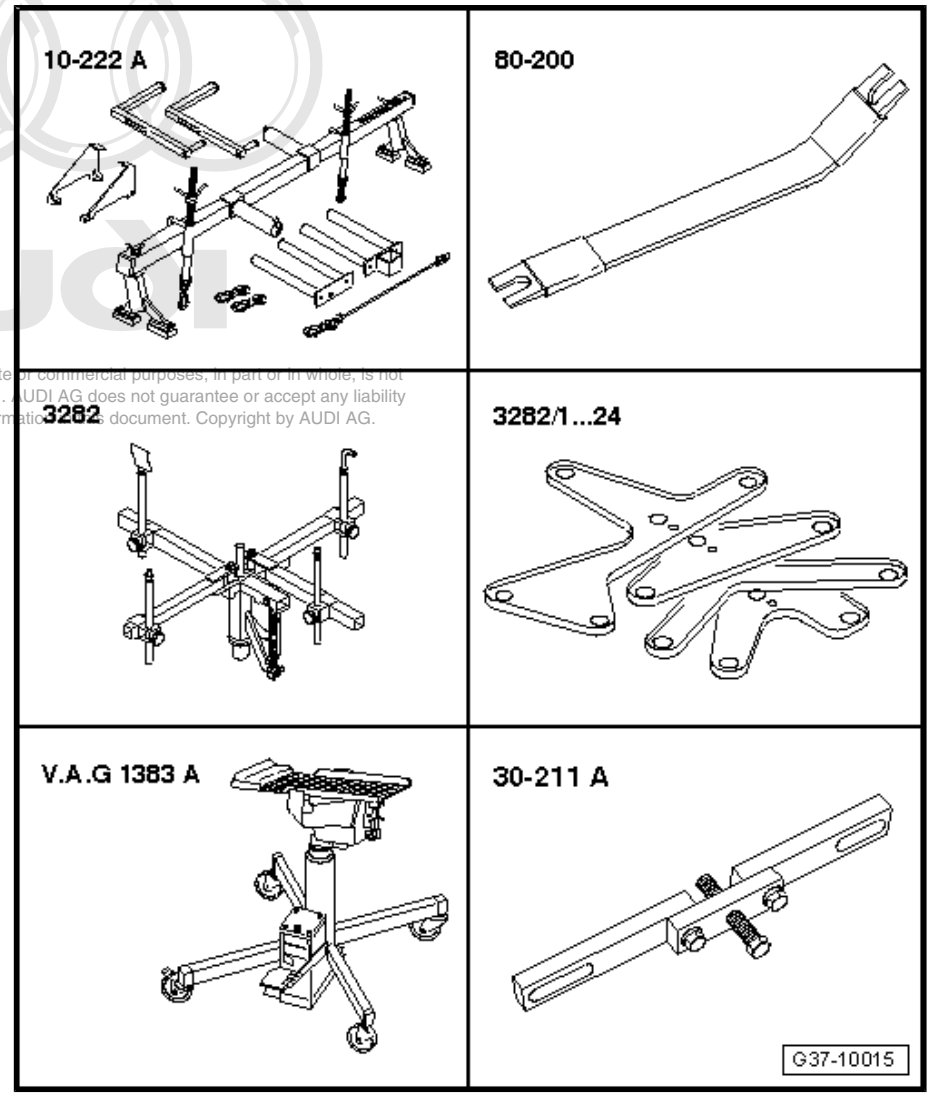

Protected by copyright. Copying for private or commercial purposes, in part or in whole, is not permitted unless authorised by AUDI AG. AUDI AG does not guarantee or accept any liability with respect to the correctness of information in this document. Copyright by AUDI AG.

Procedure

> **Caution**
>
> - *Contact corrosion! Notes ⇒ page 16 .*
> - *On vehicles with telematics: activate service mode of telematics control unit before disconnecting battery ⇒ Communication, self-diagnosis; Rep. Gr. 01 .*

– Refer to coding on vehicles with encoded radio/radio navigation system (RNS); obtain coding if necessary.

– Disconnect earth strap on battery (in luggage compartment) with ignition switched off.

– Remove engine cover caps.
– Remove engine cover panel -arrows-.
– Remove front exhaust pipe with catalytic converter ⇒ Rep. Gr. 26 .

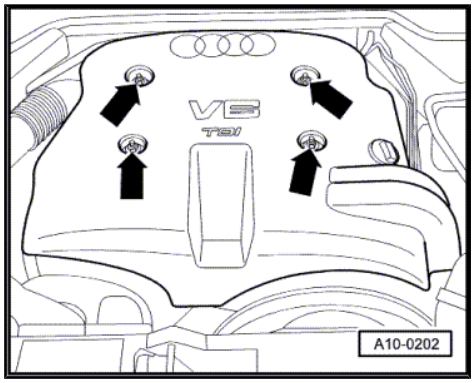

Protected by copyright. Copying for private or commercial purposes, in part or in whole, is not permitted unless authorised by AUDI AG. AUDI AG does not guarantee or accept any liability with respect to the correctness of information in this document. Copyright by AUDI AG.

– Remove air intake hose -arrows-.

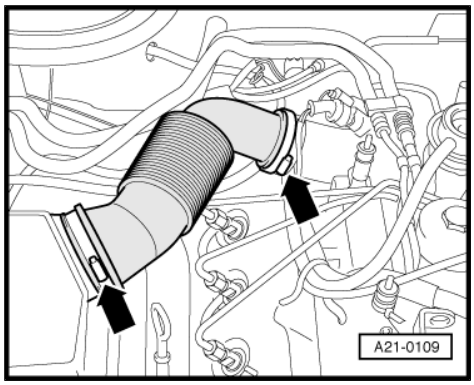

– Detach air hose going to turbocharger -arrows-.

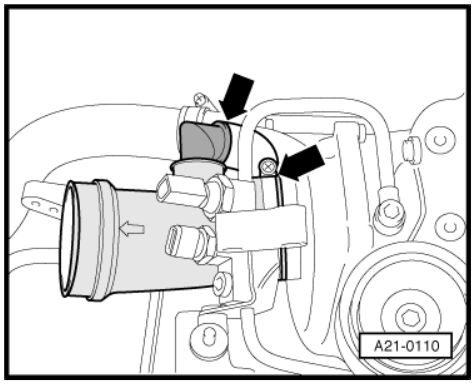

– Remove engine lifting eye at intake manifold (rear left) and secure it together with oil pipe at intake manifold (rear right) -arrow-; tighten to 22 Nm.

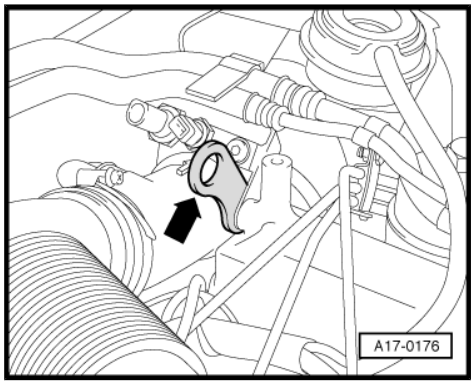

– Remove engine lifting eye at intake manifold (front left) and secure it at intake manifold (rear left) -arrow-; tighten to 22 Nm.

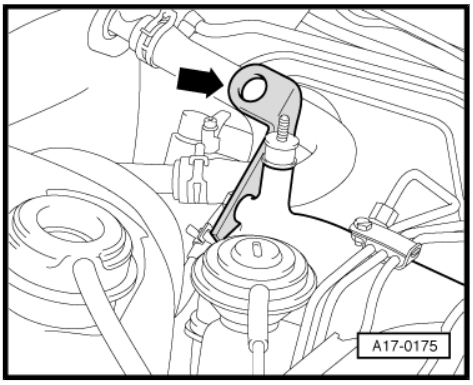

– Remove covers -1 … 4-.

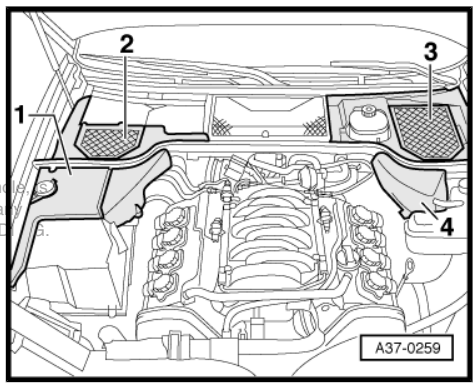

Protected by copyright. Copying for private or commercial purposes, in part or in whole, is not permitted unless authorised by AUDI AG. AUDI AG does not guarantee or accept any liability with respect to the correctness of information in this document. Copyright by AUDI AG.

– Set up support bracket -10-222 A- with 2x adapters -10-222 A/4- and spindles.

• Left spindle behind support bracket, right spindle in front of support bracket.

– Position support bracket -10-222 A- onto bolts on suspension strut mountings and check stability.

– Hook spindles of support bracket into rear engine lifting eyes.

– Tighten spindles slightly, but do not take up weight of engine.

– Remove poly V-belt ⇒ Rep. Gr. 13 .

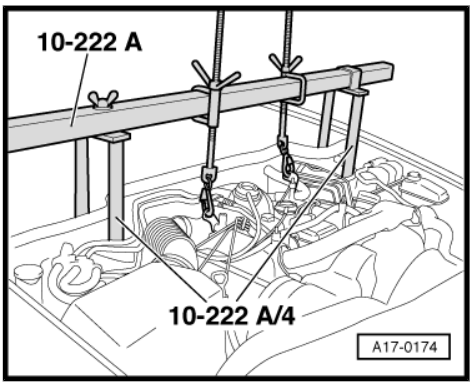

– Remove both front wheels.

– Unbolt bracket for noise insulation -arrows-.

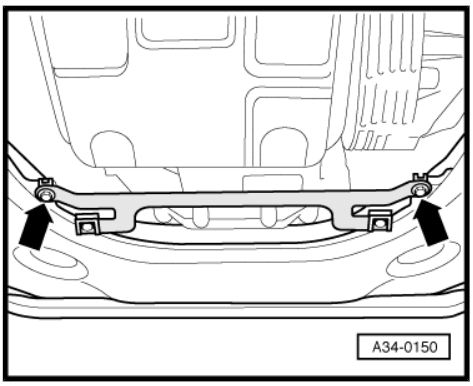

– Unbolt damper weight -arrow- (right side of subframe).

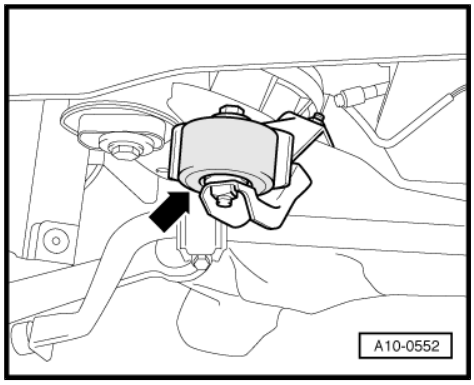

– Remove bolts -1- and -2- for alternator.
– Take alternator out from underneath and disconnect electrical wiring.

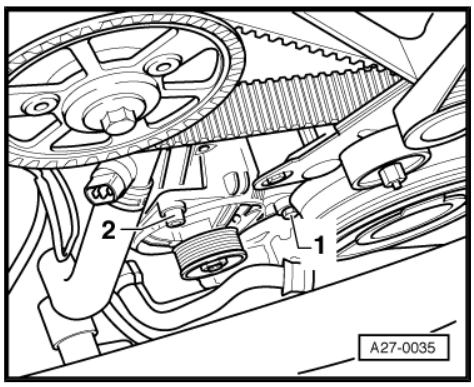

– Disconnect electrical wiring -1- and -2- at starter and detach insulator from positive terminal of starter.
– Remove starter retaining bolts -arrows- from gearbox side.
– Take starter out from underneath through space between ATF oil pan and body strut.

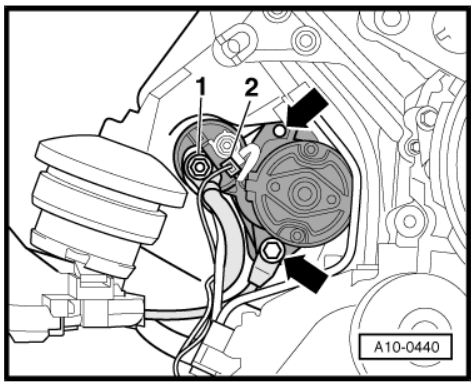

– Unscrew 3 torque converter bolts -arrow- through starter opening (turn crankshaft $^1/_3$ turn each time).

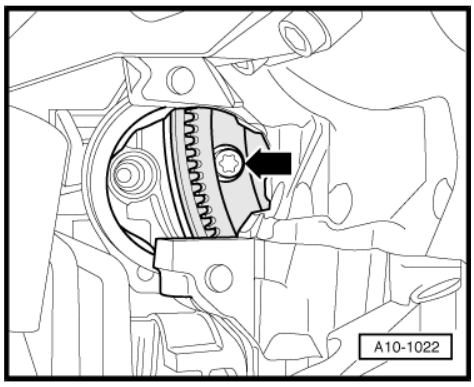

Note

To slacken the torque converter bolts, counter-hold the main bolt on the vibration damper.

Protected by copyright. Copying for private or commercial purposes, in part or in whole, is not permitted unless authorised by AUDI AG. AUDI AG does not guarantee or accept any liability with respect to the correctness of information in this document. Copyright by AUDI AG.

– Remove noise insulation above drive shaft (left and right) -arrows-.

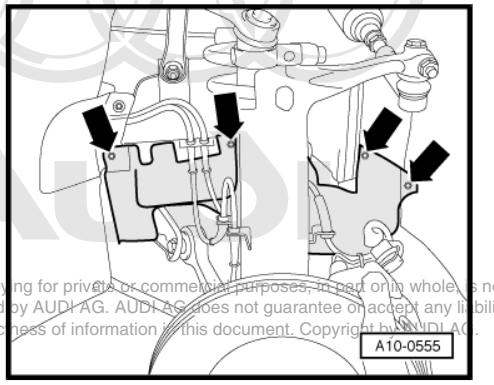

Protected by copyright. Copying for private or commercial purposes, in part or in whole, is not permitted unless authorised by AUDI AG. AUDI AG does not guarantee or accept any liability with respect to the correctness of information in this document. Copyright by AUDI AG.

– Unbolt heat shield for left-side drive shaft -arrows-.
– Unbolt drive shafts (left and right) from gearbox flange shafts ⇒ Rep. Gr. 40 .

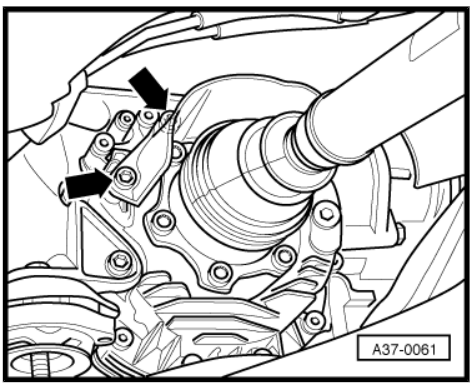

Vehicles with four-wheel drive:

– If fitted, remove cross member -arrows-.
– Detach rear section of exhaust system and remove.

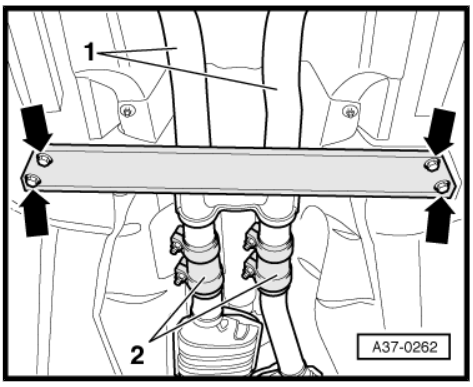

Note

-Item 1- and -item 2- can be disregarded.

– Before removing, check position of constant velocity joint on propshaft in relation to flange for propshaft on rear final drive and mark position for reinstallation if necessary.
– Remove propshaft ⇒ page 186 .

All models:

– Remove 3 bottom bolts securing engine and gearbox.

– Turn locking lever -1- and unplug electrical connector for gearbox wiring harness.
– Unplug electrical connector -2- of multi-function switch -F125- .
– Unbolt bracket -3- for connector and guide out connector with bracket from underneath.

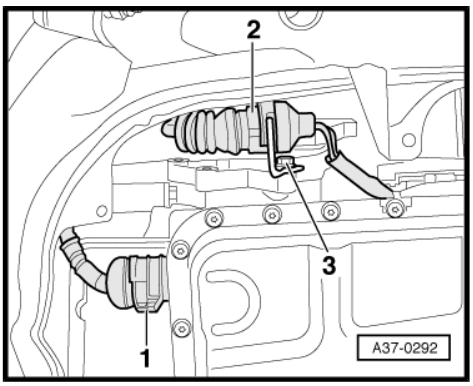

– Unbolt brackets for ATF pipes -arrows-.

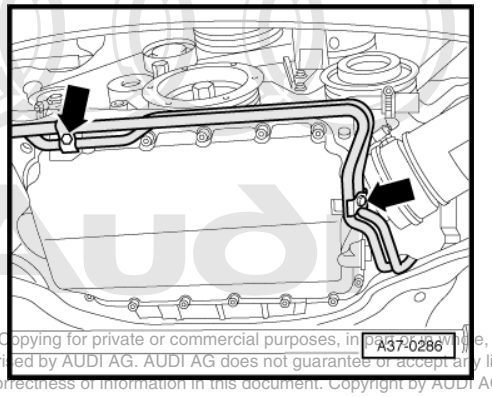

Protected by copyright. Copying for private or commercial purposes, in part or in whole, is not permitted unless authorised by AUDI AG. AUDI AG does not guarantee or accept any liability with respect to the correctness of information in this document. Copyright by AUDI AG.

– Unbolt engine speed sender -G28- -item 1- from front left of gearbox.

– Detach electrical connector -2- from speedometer sender -G22- .

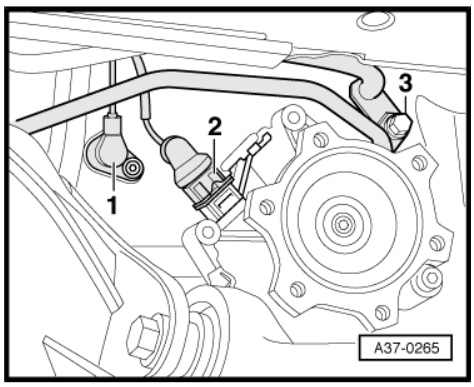

Note

Observe rules for cleanliness when working on automatic gearbox *⇒ page 19* *.*

– Remove bolt -3- and detach ATF pipes from gearbox.

– Move ATF pipes clear to one side.

– To remove automatic gearbox 01V set up gearbox support -3282- with adjustment plate -3282/19- and place on engine and gearbox jack -V.A.G 1383 A- .

– Fit support elements.

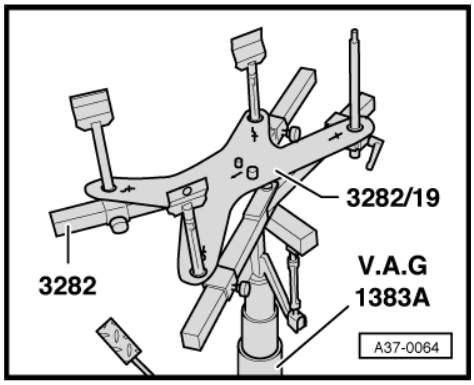

Note

- *The symbols on the adjustment plate -3282/19- indicate the positions of the support elements (arrow points forwards).*
- *The adjustment plate can only be fitted in one position.*

– Place engine and gearbox jack -1383 A- with gearbox support -3282- underneath gearbox and position adjustment plate so it is parallel with gearbox.

– Secure support elements to left and right side of gearbox.

– Remove left and right gearbox supports ⇒ page 73 .

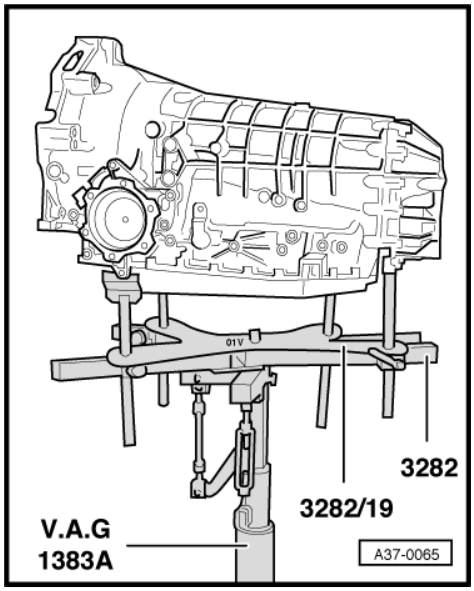

– Unscrew multi-function switch -F125- to protect it from damage -arrows- and move wiring harness clear.

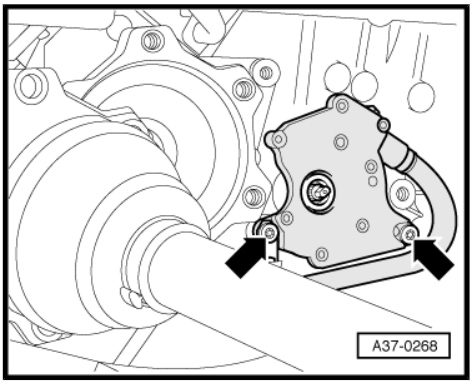

– Use removal lever -80-200- to prise selector lever cable -1- off selector shaft lever -2- (remove retaining clip -arrow- if fitted).

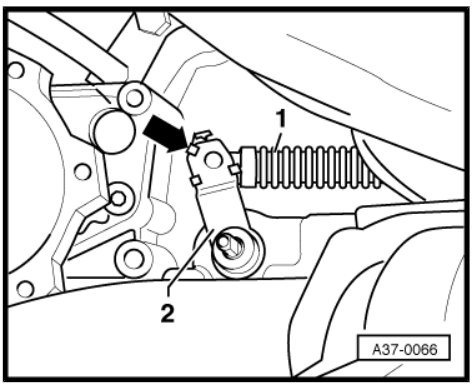

– If necessary, mark position of selector lever cable support bracket on gearbox housing for later installation, and unbolt support bracket -arrows-.

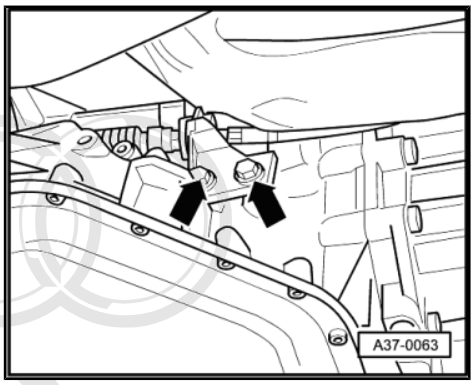

– Remove bolts -1- and -2- at rear of subframe.

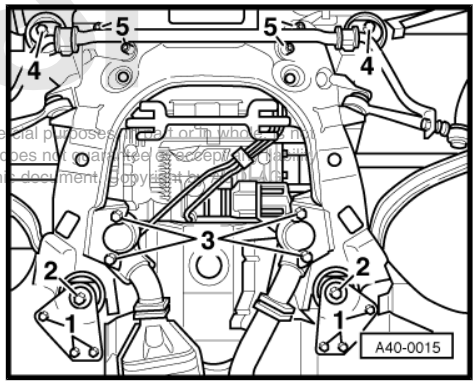

Protected by copyright. Copying for private or commercial purposes, in part or in whole, is not permitted unless authorised by AUDI AG. AUDI AG does not guarantee or accept any liability with respect to the correctness of information in this document. Copyright by AUDI AG.

- The subframe should be lowered by -a- = approx. 80 mm from the mounting point on the body.

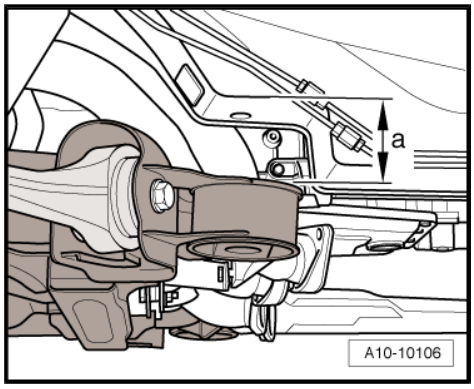

Note

If necessary, reduce tension at spindle of support bracket -10-222 A- .

– Lower gearbox slightly at the rear.
– Move drive shafts clear to the front.

Note

Make sure you do not damage surface coating on drive shafts.

– Support engine at front with commercially available support.
– Remove top engine/gearbox securing bolts.

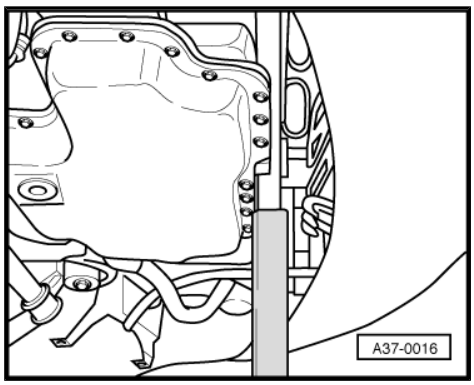

– Press gearbox off engine and at the same time press torque converter out of drive plate.

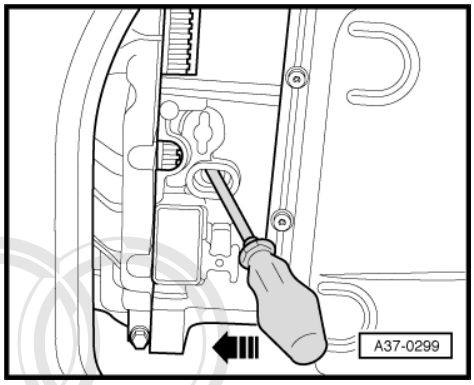

– Lower rear of engine/gearbox assembly slightly with engine and gearbox jack -V.A.G 1383 A- -arrow-.
– Guide the gearbox out diagonally downwards/to the rear.
- Subframe has been lowered by a distance of -a- = approx. 80 mm.

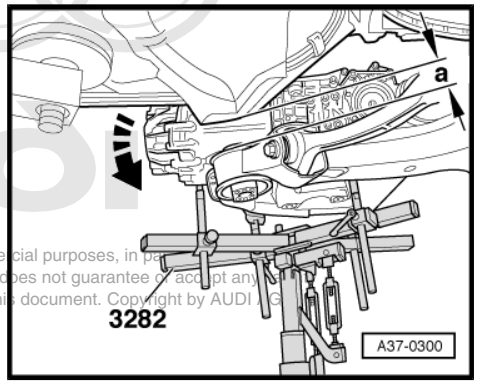

Note

Ensure that there is sufficient room between bulkhead and engine.

Protected by copyright. Copying for private or commercial purposes, in part, is not permitted unless authorised by AUDI AG. AUDI AG does not guarantee or accept any liability with respect to the correctness of information in this document. Copyright by AUDI AG.

– Secure torque converter in gearbox with support bridge -30-211 A- to prevent it dropping out.

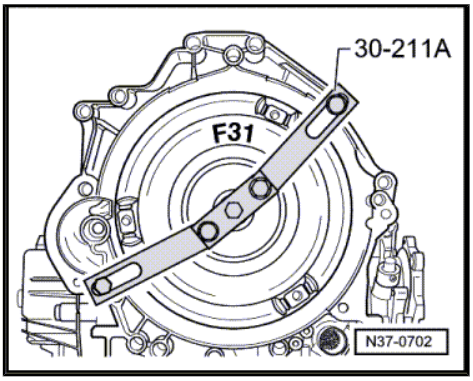

2.4 Installing gearbox - all vehicles

Installation is carried out in reverse sequence; note the following:

Note

- *Clean ATF pipes and ATF cooler before installing a replacement gearbox* ⇒ page 91 .
- *Renew self-locking nuts and bolts.*
- *Always renew seals and O-rings.*

– Before installing the gearbox ensure that the torque converter has been correctly fitted in the gearbox ⇒ page 23 .

If the torque converter is correctly inserted, the distance between the surface of the securing eyes and the surface of the torque converter bellhousing is at least 23 mm.

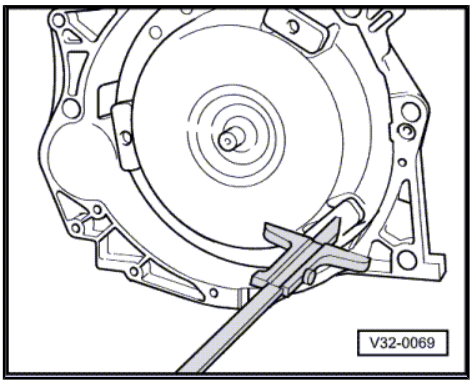

Caution

If the torque converter is not fitted correctly, the torque converter drive lugs or the ATF pump will be seriously damaged when the gearbox is joined to the engine.

Protected by copyright. Copying for private or commercial purposes, in part or in whole, is not permitted unless authorised by AUDI AG. AUDI AG does not guarantee or accept any liability with respect to the correctness of information in this document. Copyright by AUDI AG.

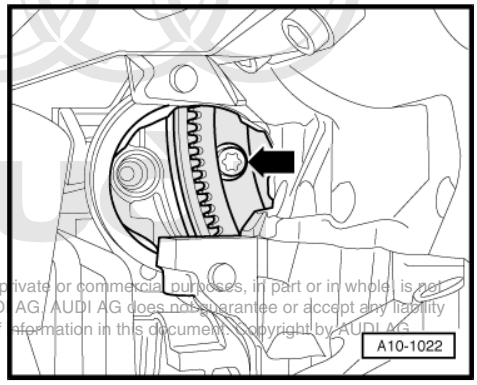

– Before joining engine and gearbox, turn torque converter and drive plate (on engine) until one hole and one tapped hole are in line with the opening for the removed starter -arrow-.

– Use new ribbed bolts (genuine Audi parts) to secure torque converter to drive plate ⇒ Electronic parts catalogue .

Caution

Before and while you are tightening the bolts on the engine/ gearbox connection keep checking that the torque converter can still be rotated behind the drive plate. If the converter cannot be rotated, it is probably not correctly inserted, and when the bolts are finally tightened the drive lugs of the ATF pump - and thus the gearbox - will be irreparably damaged.

Protected by copyright. Copying for private or commercial purposes, in part or in whole, is not permitted unless authorised by AUDI AG. AUDI AG does not guarantee or accept any liability with respect to the correctness of information in this document. Copyright by AUDI AG.

– Before installing gearbox, make sure dowel sleeves are correctly seated on cylinder block.

– Make sure that no wiring or pipes are trapped when bringing engine and gearbox together.

– Install subframe, observing tightening sequence ⇒ Rep. Gr. 40 .

– Install multi-function switch -F125- ⇒ page 101 .

– Install left and right gearbox supports ⇒ page 73 .

– Check selector lever cable adjustment ⇒ page 35 .

– Install propshaft ⇒ page 186 and adjust ⇒ page 190 .

– Bolt drive shafts to gearbox flanges ⇒ Rep. Gr. 40 .

– Install starter ⇒ Rep. Gr. 27 .

Vehicles with 6-cyl. petrol or TDI engine:

– Install alternator ⇒ Rep. Gr. 27 .

– Install poly V-belt ⇒ Rep. Gr. 13 .

Vehicles with 8-cyl. engine:

– Install fuel rail ⇒ Rep. Gr. 24 .

– Install radiator cowl ⇒ Rep. Gr. 19 .

All models:

– Install front exhaust pipe with catalytic converter or front exhaust pipes (left and right) with catalytic converters ⇒ Rep. Gr. 26 .

– Align exhaust system so it is free of stress ⇒ Rep. Gr. 26 .

Note

- *When reconnecting battery, remember to activate vehicle equipment (radio/navigation system (RNS), clock, electric windows) according to Owner's Manual.*
- *On vehicles with telematics: deactivate service mode of telematics control unit ⇒ Communication, self-diagnosis; Rep. Gr. 01*
- *For further procedures after reconnecting voltage supply ⇒ Rep. Gr. 24 .*

– Check ATF level ⇒ page 76 .

– Check gear oil level in front final drive ⇒ page 155 .

Tightening torques

Engine/gearbox attachment (6 cyl. petrol engine)

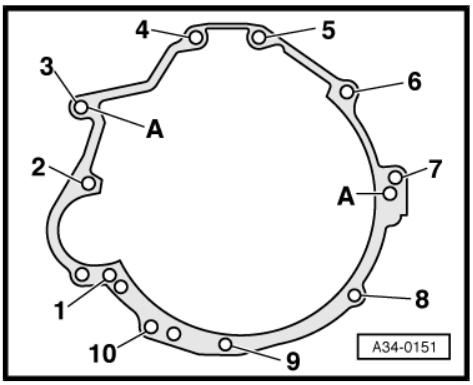

Item	Bolt	Nm
1 [1)]	M10x80	65
2	M12x110	65
3, 4, 5	M12x67	65
6	M12x90	65
7	M12x80	65
8	M10x60	45
9, 10	M10x45	45
A	Dowel sleeves for centralising	

• [1)] Bolt strength rating 10.9

Engine/gearbox attachment (8 cyl. engine)

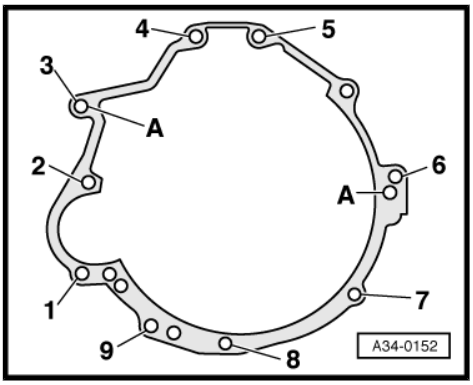

Item	Bolt	Nm
1 [1)]	M10x80	65
2	M12x90	65
3, 4, 5	M12x75	65
6	M12x90	65
7, 8, 9	M10x45	45
A	Dowel sleeves for centralising	

• [1)] Bolt strength rating 10.9

Protected by copyright. Copying for private or commercial purposes, in part or in whole, is not permitted unless authorised by AUDI AG. AUDI AG does not guarantee or accept any liability with respect to the correctness of information in this document. Copyright by AUDI AG.

Engine/gearbox attachment (6 cyl. TDI engine)

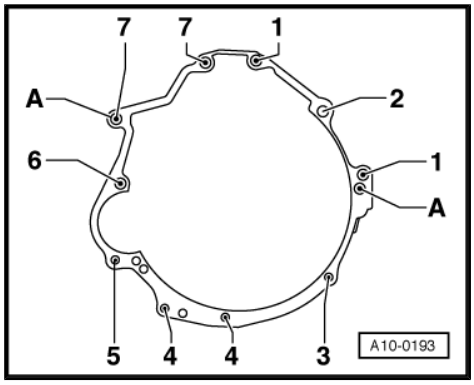

Item	Bolt	Nm
1	M12x80	65
2	M12x90	65
3	M10x60	45
4	M10x45	45
5 1)	M10x80	65
6	M12x110	65
7	M12x67	65
A	Dowel sleeves for centralising	

- 1) Bolt strength rating 10.9

Component		Nm
Torque converter to drive plate		85
Support bracket for selector lever cable to gearbox		23
Engine speed sender -G28- to gearbox		9
ATF pipe to gearbox		20
Bracket for ATF pipe to engine support/ATF oil pan		10
Heat shield for selector lever cable to gearbox (8-cylinder: with exhaust system bracket)	M6	9
	M8	23
Cross member to body		25
Heat shield for drive shaft to gearbox		23
Bracket for noise insulation to subframe		9
Engine mounting to subframe (8-cyl.)		40
Engine support to engine		42
Torque reaction support to longitudinal member		40
Gearbox mounting to subframe		40

Protected by copyright. Copying for private or commercial purposes, in part or in whole, is not permitted unless authorised by AUDI AG. AUDI AG does not guarantee or accept any liability with respect to the correctness of information in this document. Copyright by AUDI AG.

2.5 Transporting the automatic gearbox

Special tools and workshop equipment required

- Support bridge -30-211 A-

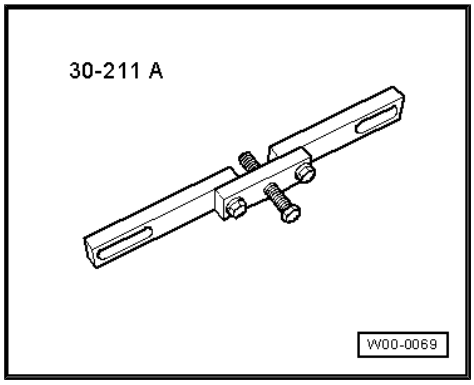

- Transportation tool -3457-

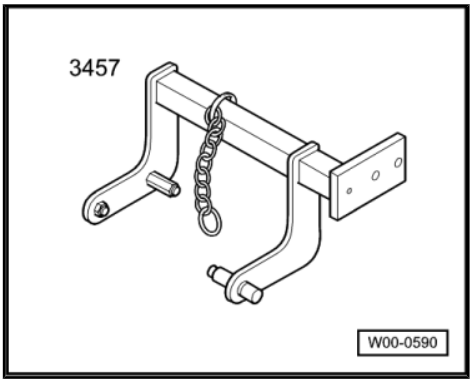

Procedure

– Attach transportation tool -3457- to attachment points on gearbox housing and secure in place.

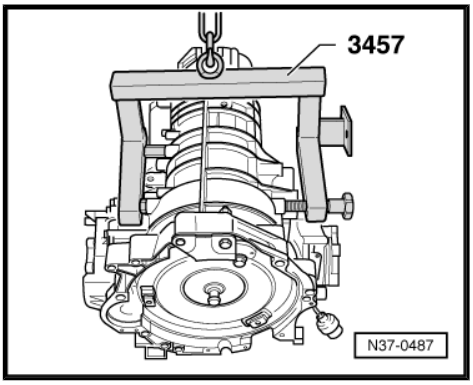

Note

- *The bolt on the transportation tool -3457- must only be screwed hand-tight into gearbox.*
- *The gearbox housing may be damaged if pliers are used to tighten the bolt.*

– Secure torque converter in gearbox with support bridge -30-211 A- to prevent it dropping out.

– Lift gearbox with workshop hoist -VAS 6100- and transportation tool -3457- .

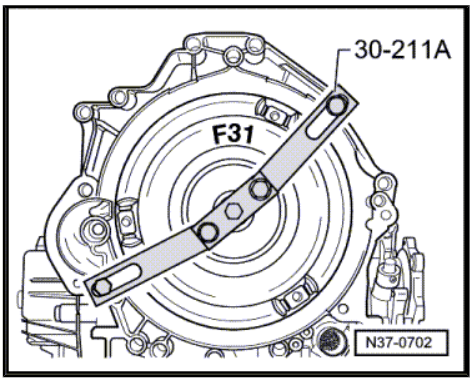

Protected by copyright. Copying for private or commercial purposes, in part or in whole, is not permitted unless authorised by AUDI AG. AUDI AG does not guarantee or accept any liability with respect to the correctness of information in this document. Copyright by AUDI AG.

2.6 Securing gearbox to assembly stand

Special tools and workshop equipment required

- Support plate -VW 309-
- Transportation tool -3457-
- Engine/gearbox support -VAS 6095-
- Workshop hoist -VAS 6100-

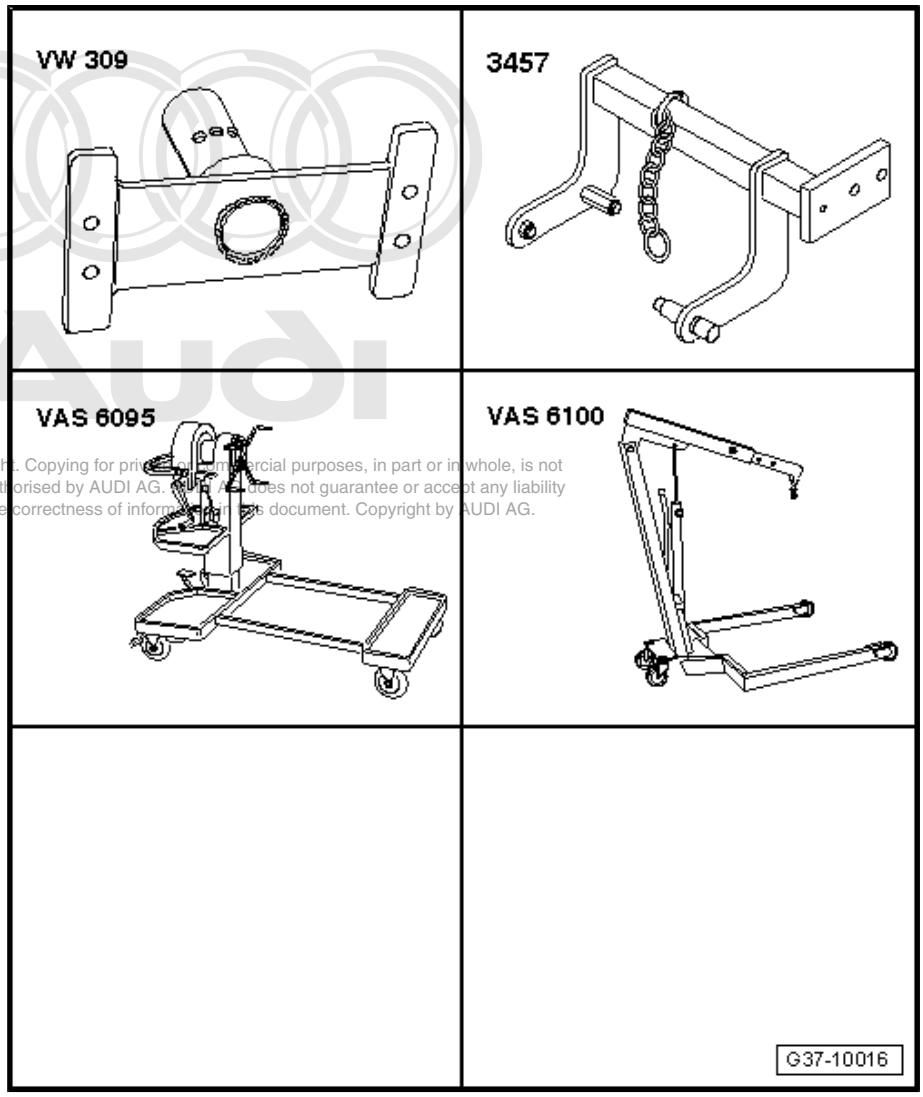

Protected by copyright. Copying for private or commercial purposes, in part or in whole, is not permitted unless authorised by AUDI AG. AUDI AG does not guarantee or accept any liability with respect to the correctness of information in this document. Copyright by AUDI AG.

Procedure

- Gearbox removed
  ⇒ “2.1 Removing gearbox - vehicles with 6-cylinder petrol engine”, page 40 ,
  ⇒ “2.2 Removing gearbox - vehicles with 8-cylinder engine”, page 49 or
  ⇒ “2.3 Removing gearbox - vehicles with 6-cylinder TDI engine”, page 59 .
- Torque converter secured with support bridge -30-211 A- or removed.

– Attach support plate -VW 309- to transportation tool -3457- .

– Attach transportation tool -3457- to attachment points on gearbox housing and secure in place.

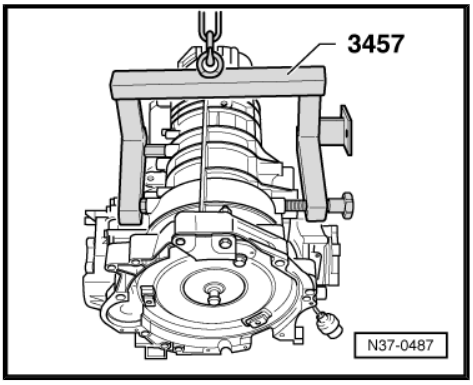

Note

- *The bolt on the transportation tool -3457- must only be screwed hand-tight into gearbox.*
- *The gearbox housing may be damaged if pliers are used to tighten the bolt.*

– Use workshop hoist -VAS 6100- to place gearbox into engine and gearbox support -VAS 6095- .

Note

If the gearbox is full and it is to be turned in the engine and gearbox support so that the oil pan points upwards, the breather holes for the gearbox housing and final drive must be sealed.

2.7 Removing and installing gearbox support (left and right)

Special tools and workshop equipment required

- Engine and gearbox jack -1383 A-
- Gearbox support -3282-
- Adjustment plate -3282/19-

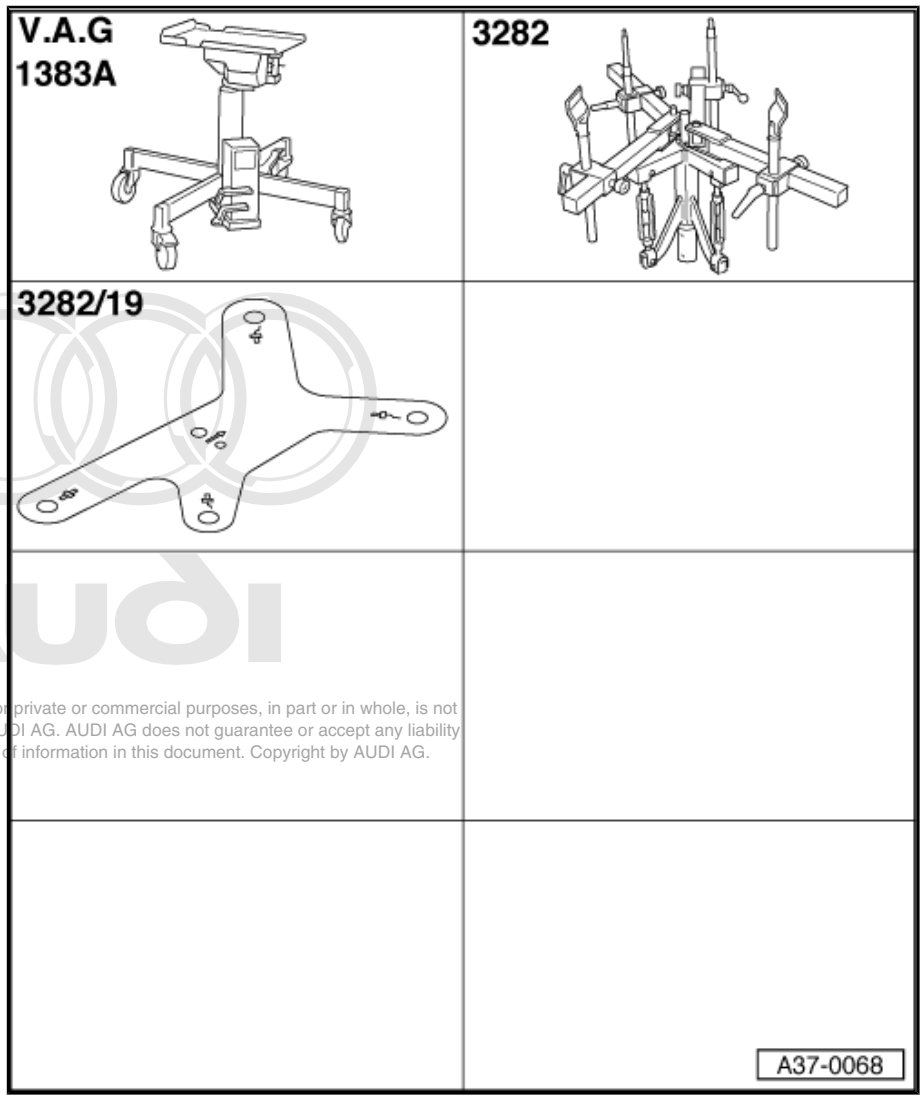

Protected by copyright. Copying for private or commercial purposes, in part or in whole, is not permitted unless authorised by AUDI AG. AUDI AG does not guarantee or accept any liability with respect to the correctness of information in this document. Copyright by AUDI AG.

Procedure

Caution

Contact corrosion! Notes ⇒ page 16 .

Note

The weight of the gearbox must be supported as described here if both gearbox supports are removed. It is not necessary to use engine and gearbox jack if only one of the supports is removed.

– Set up gearbox support -3282- with adjustment plate -3282/19- and mount on engine and gearbox jack -V.A.G 1383 A- .

– Fit support elements.

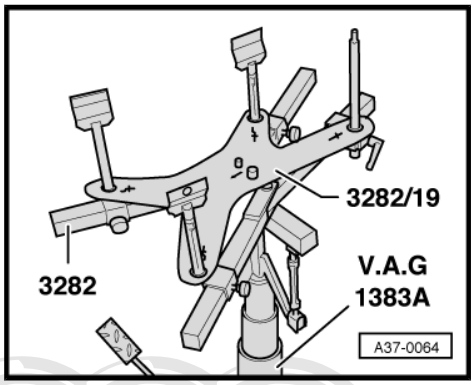

Note

- *The symbols on the adjustment plate -3282/19- indicate the positions of the support elements (arrow points forwards).*
- *The adjustment plate can only be fitted in one position.*

– Place engine and gearbox jack -1383 A- with gearbox support -3282- underneath gearbox and position adjustment plate so it is parallel with gearbox.

– Secure support elements to left and right side of gearbox.

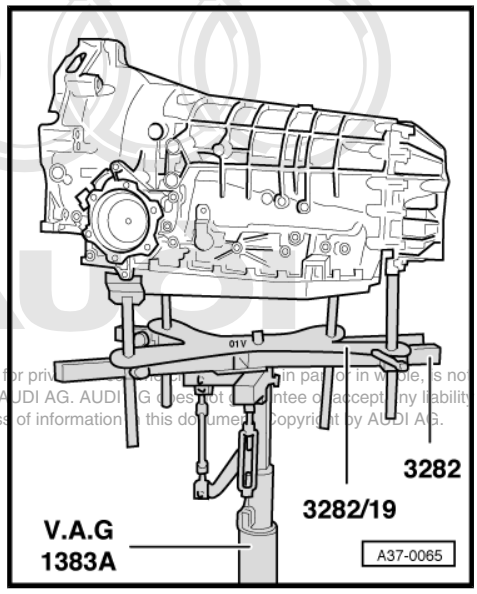

Protected by copyright. Copying for priv[illegible] in pa[illegible]or in w[illegible]le, is no[illegible] permitted unless authorised by AUDI AG. AUDI [illegible]G does not g[illegible]ntee o[illegible] accept [illegible]y liabilit[illegible] with respect to the correctness of information [illegible] this do[illegible]ume[illegible] Copyrig[illegible]t by AUDI AG.

– Detach heat shield.
– Remove gearbox support (right-side) -arrow-.

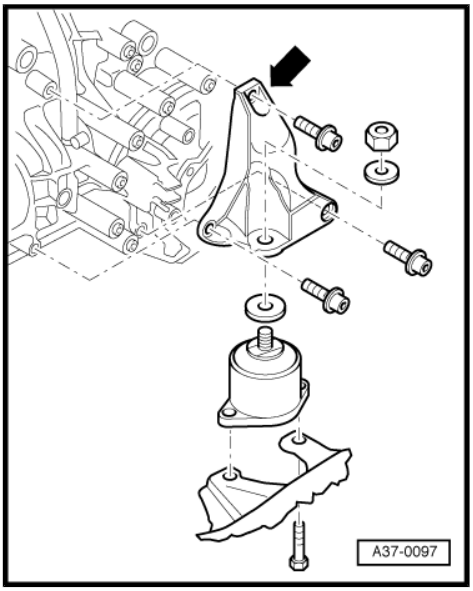

– Detach heat shield.
– Remove gearbox support (left-side) -arrow-.

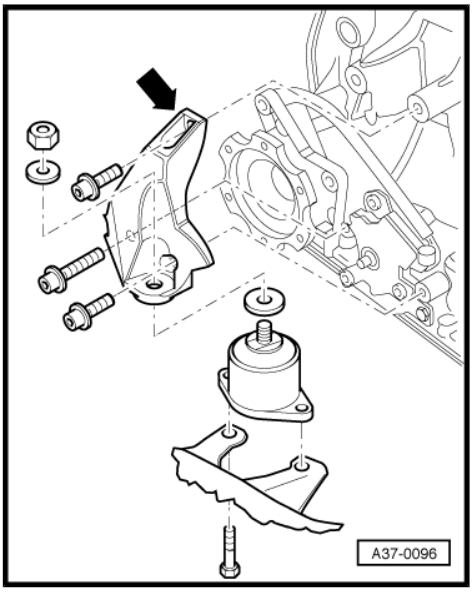

Tightening torques

Component	Nm
Gearbox support to gearbox	42
Gearbox support to gearbox mounting	42
Gearbox mounting to subframe	40

Protected by copyright. Copying for private or commercial purposes, in part or in whole, is not permitted unless authorised by AUDI AG. AUDI AG does not guarantee or accept any liability with respect to the correctness of information in this document. Copyright by AUDI AG.

3 ATF in planetary gearbox

Special tools and workshop equipment required

- Vehicle diagnostic, testing and information system -VAS 5051-
- Used oil collection and extraction unit -V.A.G 1782-
- ATF filling unit -V.A.G 1924-
- Safety goggles

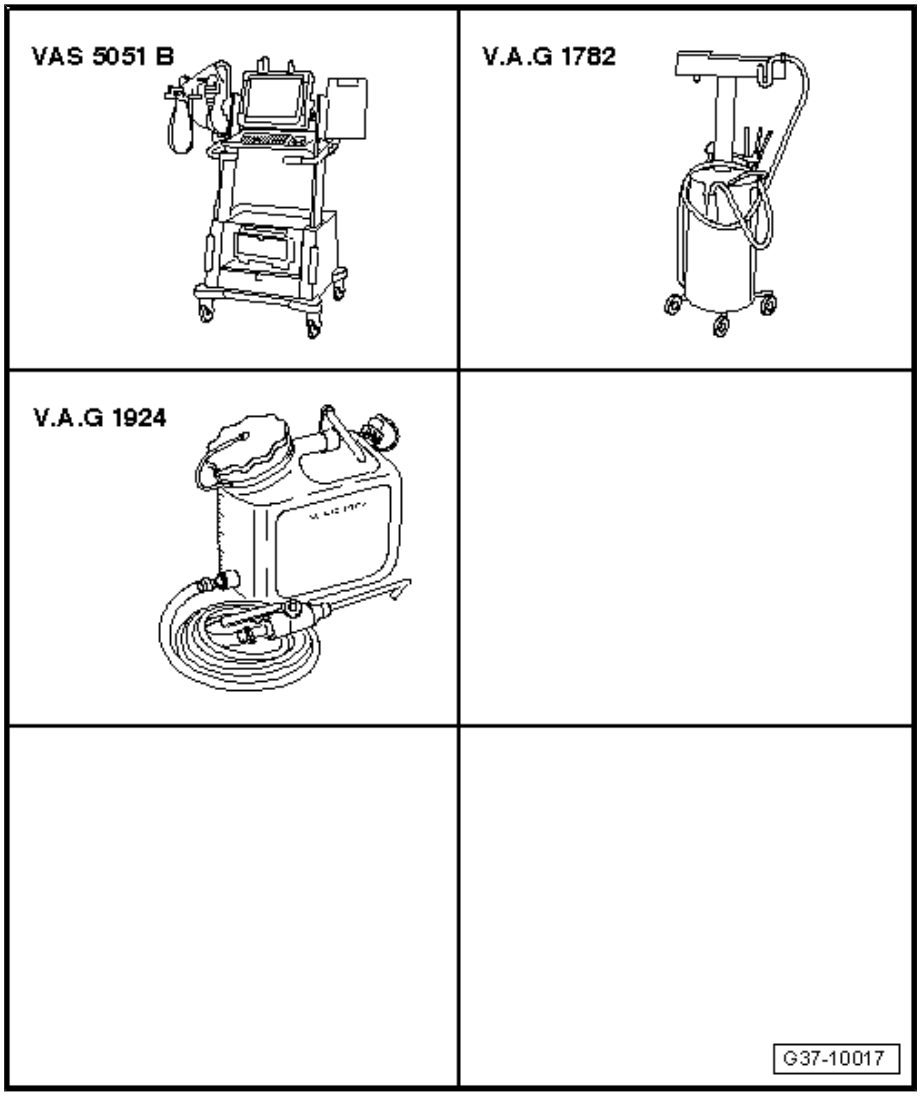

3.1 Checking and topping up ATF level in planetary gearbox

Test conditions

- Gearbox must not be in emergency running (backup) mode.
- Vehicle must be level (horizontal).
- Selector lever in position “P”, engine idling.
- Air conditioner and heating system switched off.
- Vehicle diagnostic, testing and information system -VAS 5051- connected up; “vehicle self-diagnosis” and vehicle system “02 - Gearbox electronics” selected.
- The ATF temperature at the beginning of the test must not be higher than 30°C. If necessary, first allow the gearbox to cool down.

Protected by copyright. Copying for private or commercial purposes, in part or in whole, is not permitted unless authorised by AUDI AG. AUDI AG does not guarantee or accept any liability with respect to the correctness of information in this document. Copyright by AUDI AG.

Note

- *The ATF temperature is taken from the reading on the vehicle diagnostic, testing and information system -VAS 5051- .*
- *The ATF level will vary according to the ATF temperature.*
- *If the ATF level is checked when the ATF temperature is too low, this will result in overfilling.*
- *If the level is checked when the ATF temperature is too high, this will result in underfilling.*
- *Both overfilling and underfilling have a detrimental effect on the functioning of the gearbox.*
- *An additional ATF check is required for vehicles with auxiliary ATF cooler* *⇒ page 80* *.*

ATF temperature reading

Display on -VAS 5051- :

– From list -1-, select diagnostic function “08 - Read measured value block”.

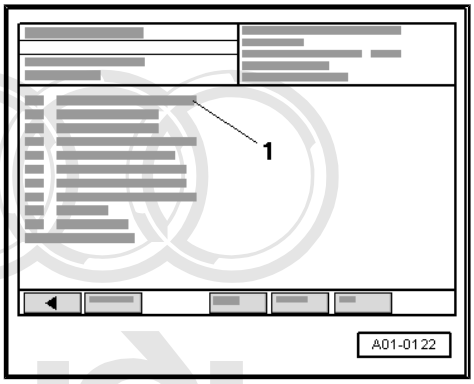

Display on -VAS 5051- :

1 - Enter display group

– Use keypad -2- to enter “4” for “Display group 004” and confirm by touching Q key.

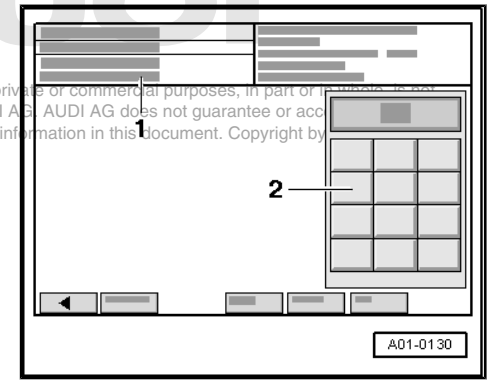

Protected by copyright. Copying for private or commercial purposes, in part or in whole, is not permitted unless authorised by AUDI AG. AUDI AG does not guarantee or accept any liability with respect to the correctness of information in this document. Copyright by AUDI AG.

Display on -VAS 5051- :

– Reading for ATF temperature is shown in display zone -1-.

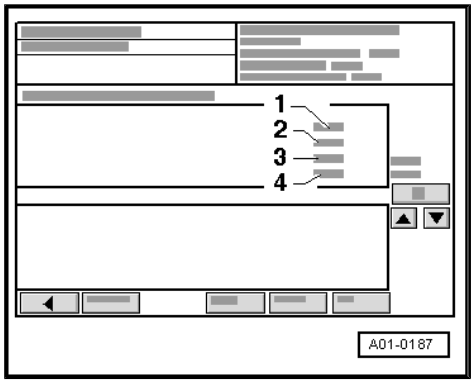

Checking and correcting ATF level

Note

- *The ATF level is checked at the ATF inspection plug.*
- *The ATF level is correct if a small amount of fluid comes out at the ATF inspection plug when ATF temperature is between 35°C and 45°C, or 50°C in hot climates (the fluid level rises due to expansion as it warms up).*

– Drive vehicle onto a lifting platform or over an inspection pit in order for it to be absolutely horizontal.

– Fill container of ATF filling unit -V.A.G 1924- with ATF for automatic gearbox 01V; ATF specification ⇒ page 10 .

Caution

The ATF filling system must be clean and the ATF must not be mixed with other types of ATF!

– Secure reservoir for ATF filling unit -V.A.G 1924- as high as possible on vehicle.

– Start engine and let it idle.

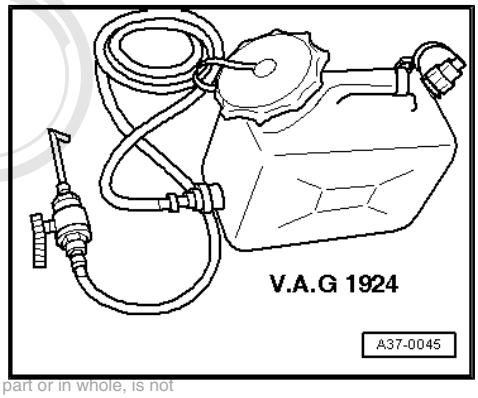

Protected by copyright. Copying for private or commercial purposes, in part or in whole, is not permitted unless authorised by AUDI AG. AUDI AG does not guarantee or accept any liability with respect to the correctness of information in this document. Copyright by AUDI AG.

– Vehicles with 6-cyl. TDI engine: loosen quick-release fasteners -2- and remove rear noise insulation.

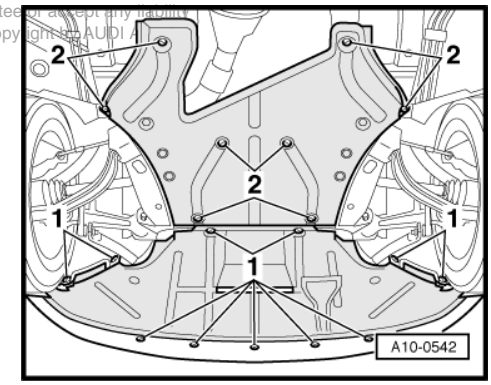

– Place used oil collection and extraction unit -V.A.G 1782- below gearbox.

> **WARNING**
>
> *Wear safety goggles.*

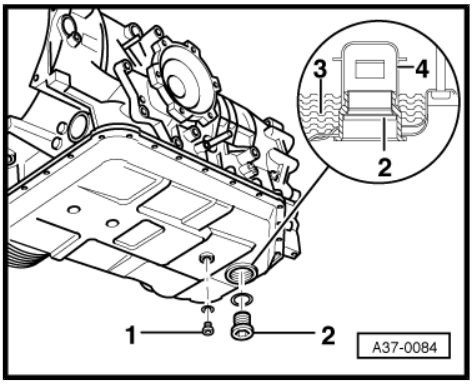

– When the ATF temperature reaches 35°C, unscrew the ATF inspection plug -2- and drain off any surplus ATF.

– Renew seal -arrow- for ATF inspection plug.

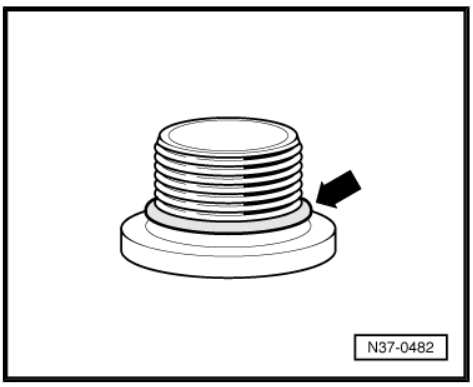

If ATF comes out of the inspection hole before the ATF has reached 40°C the ATF level -arrow- is OK.

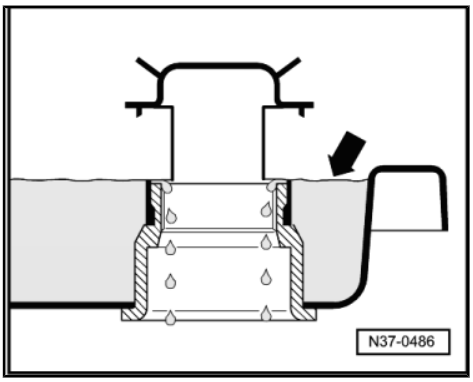

Note

The ATF inspection plug must be screwed in again at the latest when ATF reaches a temperature of 45°C (or 50°C in hot climates).

– Fit new seal on ATF inspection plug and tighten to 80 Nm. The ATF check is now completed.

– Exit from function “08 - Read measured value block” by touching ⇦ key.

Copyright by AUDI AG. Copyright. Copying for private or commercial purposes, in part or in whole, is not permitted unless authorised by AUDI AG. AUDI AG does not guarantee or accept any liability with respect to the correctness of information in this document. Copyright by AUDI AG.

– Press “06 - End output”.

– Switch off ignition and unplug diagnostic connector.

Filling up ATF

If no ATF emerges from ATF inspection hole when ATF has reached 40°C, top up with ATF:

Note

The ATF inspection plug must be screwed in again at the latest when ATF temperature reaches 45°C (or 50°C in hot climates). If necessary, switch off engine, allow gearbox to cool down and repeat the test.

– Guide filler nozzle of ATF filling unit -V.A.G 1924- in from below through an opening in the deflector cap -arrow-, taking care not to push the deflector cap upwards out of position.

– Fill with ATF using ATF filling unit -V.A.G 1924- until ATF emerges from inspection hole.

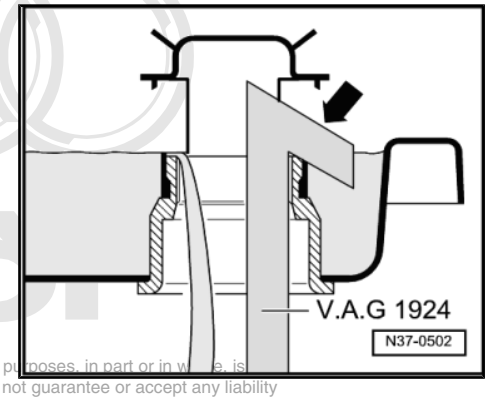

Note

The ATF level must not be too low or too high, otherwise this would impair the function of the gearbox.

Protected by copyright. Copying for private or commercial purposes, in part or in whole, is not permitted unless authorised by AUDI AG. Audi AG does not guarantee or accept any liability with respect to the correctness of information in this document. Copyright by AUDI AG.

– Fit new seal on ATF inspection plug and tighten to 80 Nm.

– Exit from function “08 - Read measured value block” by touching ⇦ key.

– Press “06 - End output”.

– Switch off ignition and unplug diagnostic connector.

3.2 Checking ATF level - vehicles with auxiliary ATF cooler

The ATF level in the auxiliary ATF cooler must be checked if the auxiliary ATF cooler has been drained or renewed.

Test conditions

- Gearbox must not be in emergency running (backup) mode.
- ATF level in gearbox OK ⇒ page 83 .
- Vehicle must be level (horizontal).
- Selector lever in position “P”, engine idling.
- Air conditioner and heating system switched off.
- Vehicle diagnostic, testing and information system -VAS 5051- connected up; vehicle self-diagnosis and vehicle system “02 - Gearbox electronics” selected.
- ATF temperature must be 80°C at the beginning of the test because the thermostat only opens the passage to the auxiliary ATF cooler at this temperature and above. Road-test the vehicle if necessary.

ATF temperature reading

Display on -VAS 5051- :

– From list -1-, select diagnostic function “08 - Read measured value block”.

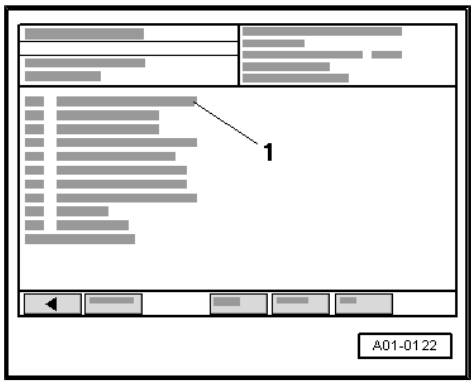

Display on -VAS 5051- :

1 - Enter display group

– Use keypad -2- to enter “4” for “Display group 4” and confirm by touching Q key.

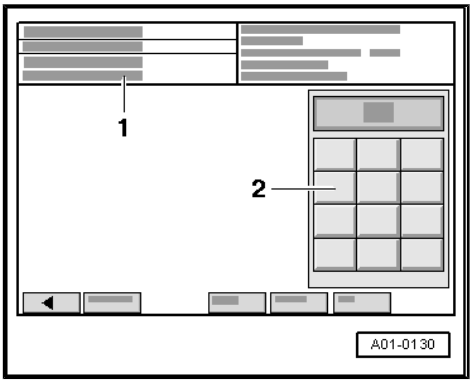

Display on -VAS 5051- :

– Reading for ATF temperature is shown in display zone -1-.

Protected by copyright. Copying for private or commercial purposes, in part or in whole, is not permitted unless authorised by AUDI AG. AUDI AG does not guarantee or accept any liability with respect to the correctness of information in this document. Copyright by AUDI AG.

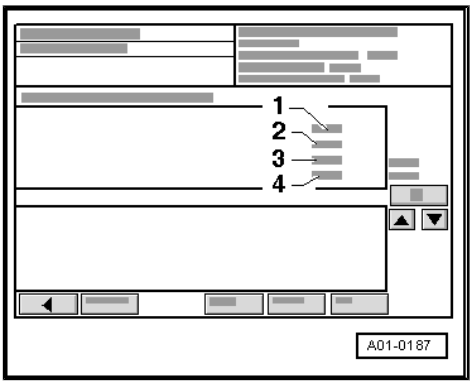

Checking and correcting ATF level

– Switch off engine and let gearbox cool down. The ATF temperature must not be higher than 30°C at the beginning of the test.

Note

- *The ATF level is checked at the ATF inspection plug.*
- *The ATF level is correct if a small amount of fluid comes out at the ATF inspection plug when ATF temperature is between 35°C and 45°C, or 50°C in hot climates (the fluid level rises due to expansion as it warms up).*

– Drive vehicle onto a lifting platform or over an inspection pit in order for it to be absolutely horizontal.

– Fill container of ATF filling unit -V.A.G 1924- with ATF for automatic gearbox 01V; ATF specification ⇒ page 10 .

Caution

The ATF filling system must be clean and the ATF must not be mixed with other types of ATF!

– Secure reservoir for ATF filling unit -V.A.G 1924- as high as possible on vehicle.

– Start engine and let it idle.

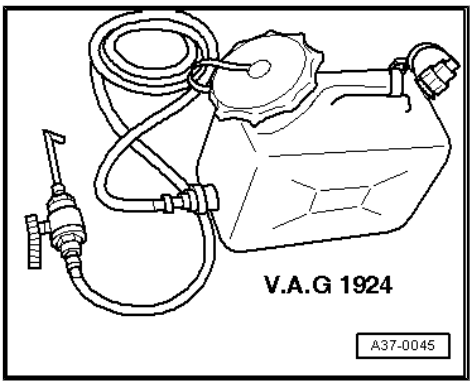

– Vehicles with 6-cyl. TDI engine: loosen quick-release fasteners -2- and remove rear noise insulation.

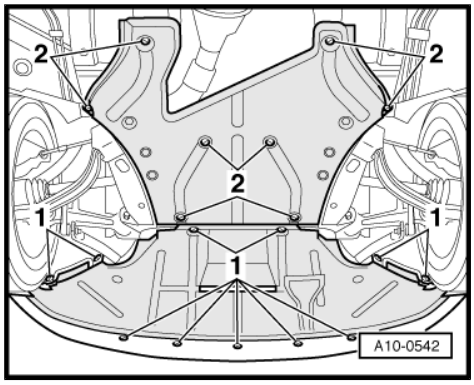

– Place used oil collection and extraction unit -V.A.G 1782- below gearbox.

> ⚠ **WARNING**
>
> *Wear safety goggles.*

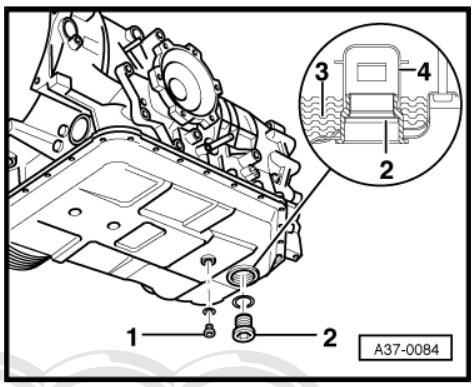

– When the ATF temperature reaches 35°C, unscrew the ATF inspection plug -2- and drain off any surplus ATF.

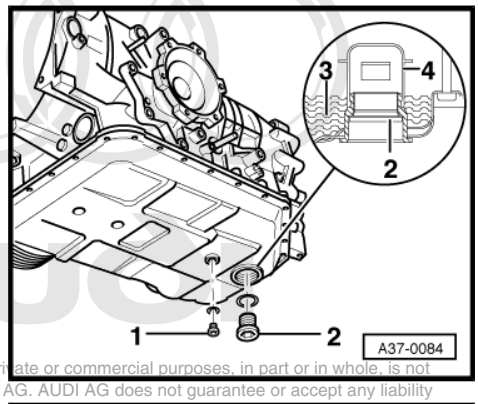

Protected by copyright. Copying for private or commercial purposes, in part or in whole, is not permitted unless authorised by AUDI AG. AUDI AG does not guarantee or accept any liability with respect to the correctness of information in this document. Copyright by AUDI AG.

– Renew seal -arrow- for ATF inspection plug.

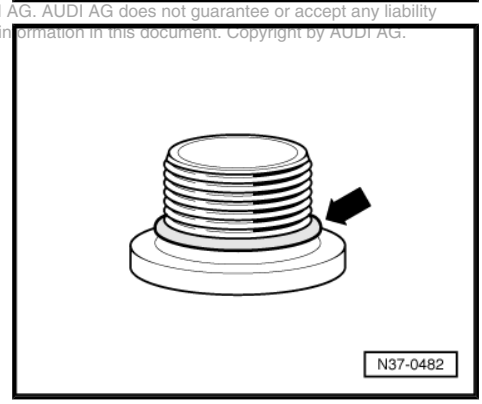

If ATF comes out of the inspection hole before the ATF has reached 40°C the ATF level -arrow- is OK.

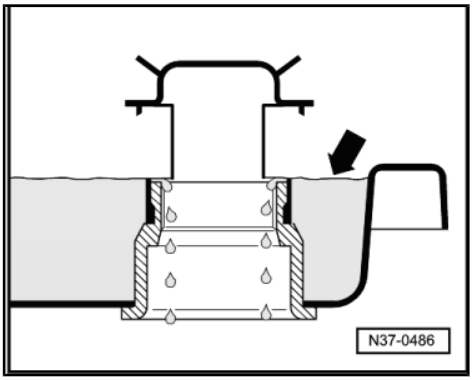

Note

The ATF inspection plug must be screwed in again at the latest when ATF reaches a temperature of 45°C (or 50°C in hot climates).

- Fit new seal on ATF inspection plug and tighten to 80 Nm. The ATF check is now completed.
- Exit from function “08 - Read measured value block” by touching ⇦ key.
- Press “06 - End output”.
- Switch off ignition and unplug diagnostic connector.

Filling up ATF

If no ATF emerges from ATF inspection hole when ATF has reached 40°C, top up with ATF:

Note

The ATF inspection plug must be screwed in again at the latest when ATF temperature reaches 45°C (or 50°C in hot climates). If necessary, switch off engine, allow gearbox to cool down and repeat the test.

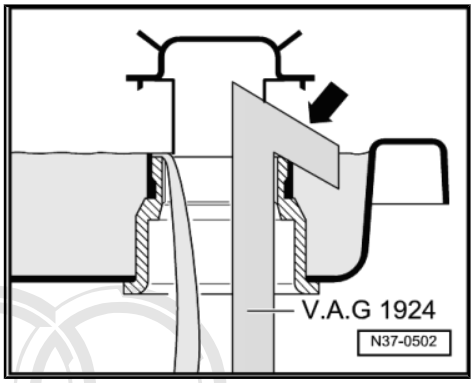

- Guide filler nozzle of ATF filling unit -V.A.G 1924- in from below through an opening in the deflector cap -arrow-, taking care not to push the deflector cap upwards out of position.
- Fill with ATF using ATF filling unit -V.A.G 1924- until ATF emerges from inspection hole.

Note

The ATF level must not be too low or too high, otherwise this would impair the function of the gearbox.

- Fit new seal on ATF inspection plug and tighten to 80 Nm.
- Exit from function “08 - Read measured value block” by touching ⇦ key.
- Press “06 - End output”.
- Switch off ignition and unplug diagnostic connector.

3.3 Draining ATF and filling up after repairs

Special tools and workshop equipment required

Protected by copyright. Copying for private or commercial purposes, in part or in whole, is not permitted unless authorised by AUDI AG. AUDI AG does not guarantee or accept any liability with respect to the correctness of information in this document. Copyright by AUDI AG.

♦ Used oil collection and extraction unit -V.A.G 1782-

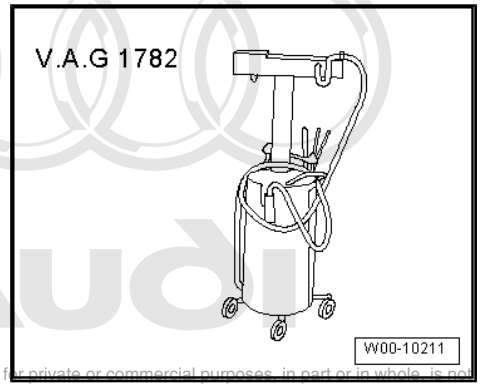

Protected by copyright. Copying for private or commercial purposes, in part or in whole, is not permitted unless authorised by AUDI AG. AUDI AG does not guarantee or accept any liability with respect to the correctness of information in this document. Copyright by AUDI AG.

♦ ATF filling unit -V.A.G 1924-

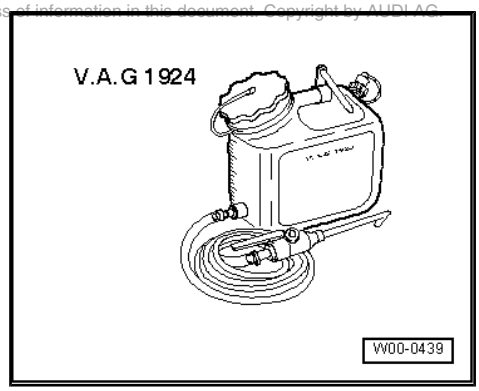

♦ Safety goggles

Procedure

- Engine not running.

– Drive vehicle onto a lifting platform or over an inspection pit in order for it to be absolutely horizontal.

– Fill container of ATF filling unit -V.A.G 1924- with ATF for automatic gearbox 01V; ATF specification ⇒ page 10 .

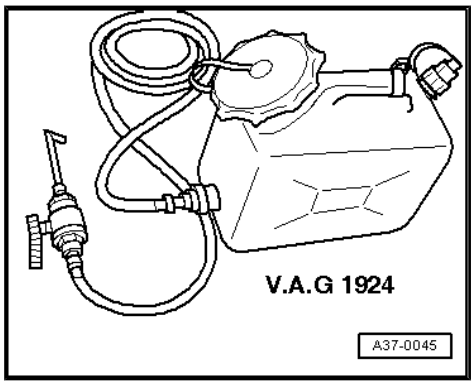

> ⚠ **Caution**
>
> ***The ATF filling system must be clean and the ATF must not be mixed with other types of ATF!***

– Secure reservoir for ATF filling unit -V.A.G 1924- as high as possible on vehicle.

Draining ATF

– Vehicles with 6-cyl. TDI engine: loosen quick-release fasteners -2- and remove rear noise insulation.

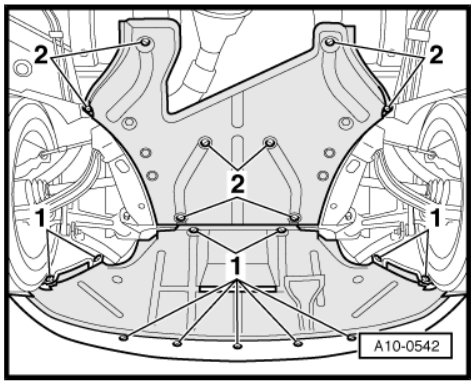

– Place used oil collection and extraction unit -V.A.G 1782- below gearbox.

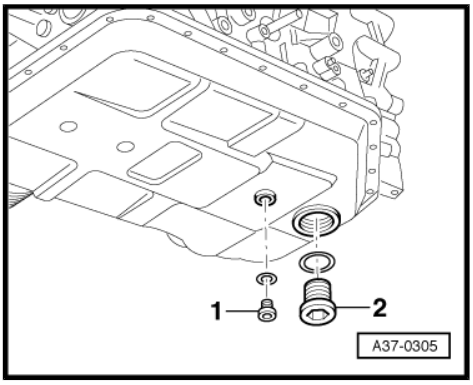

WARNING

Wear safety goggles.

– Remove ATF drain plug -1-.
– Allow ATF to drain.

Note

- *Observe relevant disposal regulations.*
- *The engine must not be started and vehicle must not be towed without ATF in gearbox.*
- *The drain plug with seal must be renewed.*

– Tighten new ATF drain plug -1- to 40 Nm.

Filling gearbox with ATF

Caution

It is important to keep exactly to the specified procedure when filling the gearbox.

– Remove ATF inspection plug -arrow B-.

Protected by copyright. Copying for private or commercial purposes, in part or in whole, is not permitted unless authorised by AUDI AG. AUDI AG does not guarantee or accept any liability with respect to the correctness of information in this document. Copyright by AUDI AG.

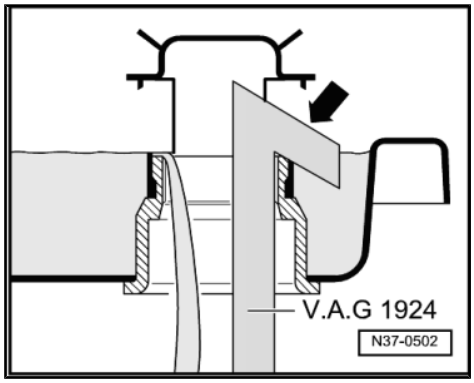

- Guide filler nozzle of ATF filling unit -V.A.G 1924- in from below through an opening in the deflector cap -arrow-, taking care not to push the deflector cap upwards out of position.
- Fill with ATF using ATF filling unit -V.A.G 1924- until ATF emerges from inspection hole.
- Shift selector lever to position “P”.
- Start engine and let it idle for approx. 20 minutes.
- Switch off engine.
- Continue filling with ATF using ATF filling unit -V.A.G 1924- until ATF comes out of inspection hole.
- Start engine and let it idle.
- Continue filling with ATF using ATF filling unit -V.A.G 1924- until ATF comes out of inspection hole again.
- Tighten ATF inspection plug.
- With the engine idling, press the brake pedal and shift the selector lever through all the selector lever positions leaving the selector lever at least 10 seconds in each position.
- Shift selector lever to position “P”.
- Check ATF level ⇒ page 76 .

Note

Observe all notes and test requirements for “Checking and correcting ATF level”.

Protected by copyright. Copying for private or commercial purposes, in part or in whole, is not permitted unless authorised by AUDI AG. AUDI AG does not guarantee or accept any liability with respect to the correctness of information in this document. Copyright by AUDI AG.

4 ATF pipes and auxiliary ATF cooler

4.1 ATF pipes (6-cylinder petrol engines) - exploded view of components

Note

Protected by copyright. Copying for private or commercial purposes, in part or in whole, is not permitted unless authorised by AUDI AG. AUDI AG does not guarantee or accept any liability with respect to the correctness of information in this document. Copyright by AUDI AG.

- *General repair instructions ⇒ page 16 .*
- *Observe rules for cleanliness when working on automatic gearbox ⇒ page 19 .*

1 - Bolt, 5 Nm

2 - Bolt, 25 Nm

3 - Union nut, 25 Nm

4 - Union nut, 25 Nm

5 - Bolt, 5 Nm

6 - O-ring
- ❑ Renew
- ❑ Lubricate with ATF when fitting

7 - Bolt, 5 Nm

8 - O-ring
- ❑ Renew
- ❑ Lubricate with ATF when fitting

9 - Bolt, 10 Nm

10 - O-ring
- ❑ Renew
- ❑ Lubricate with ATF when fitting

11 - Bolt, 20 Nm

12 - O-ring
- ❑ Renew
- ❑ Lubricate with ATF when fitting

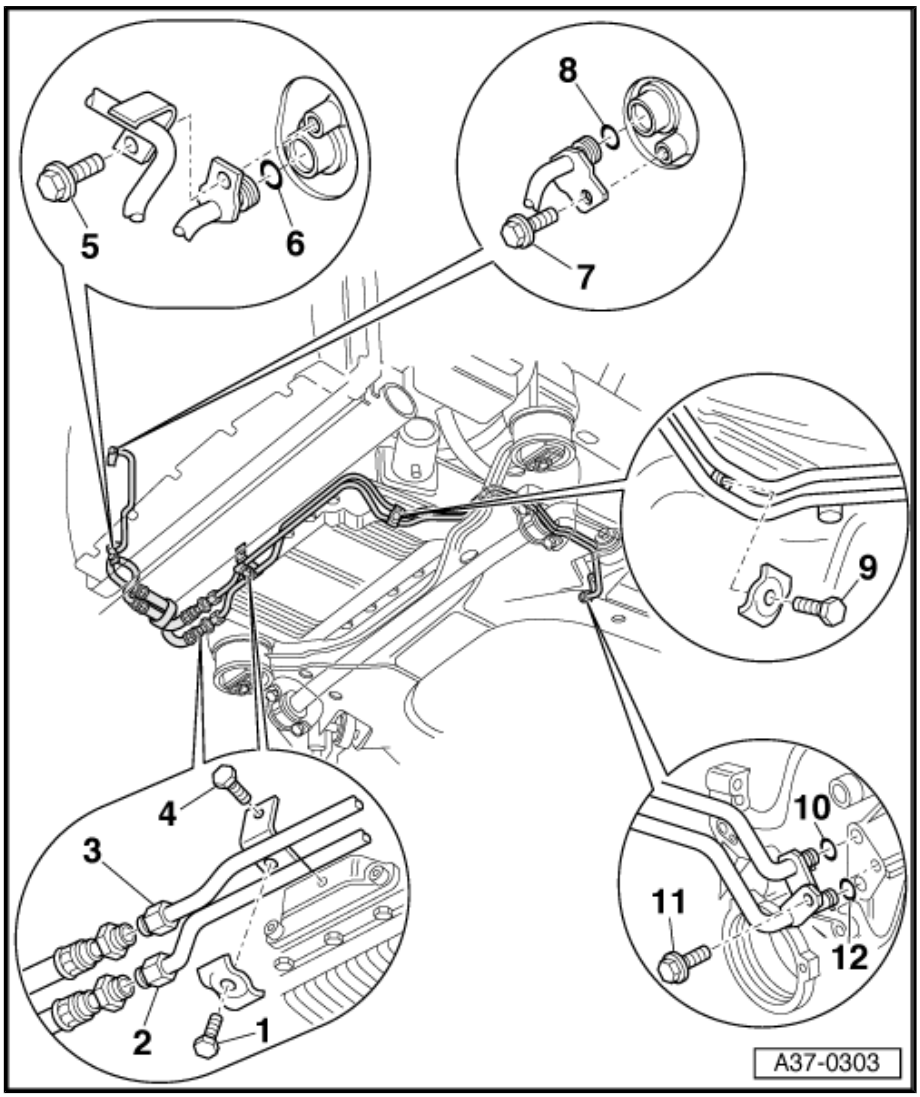

4.2 ATF pipes (8-cylinder engines) - exploded view of components

Note

- *General repair instructions* ⇒ page 16 .
- *Observe rules for cleanliness when working on automatic gearbox* ⇒ page 19 .

1 - Bolt, 10 Nm
- ❑ Self-tapping

2 - Bolt, 5 Nm

3 - O-ring
- ❑ Renew
- ❑ Lubricate with ATF when fitting

4 - Bolt, 5 Nm

5 - O-ring
- ❑ Renew
- ❑ Lubricate with ATF when fitting

6 - Bolt, 20 Nm

7 - O-ring
- ❑ Renew
- ❑ Lubricate with ATF when fitting

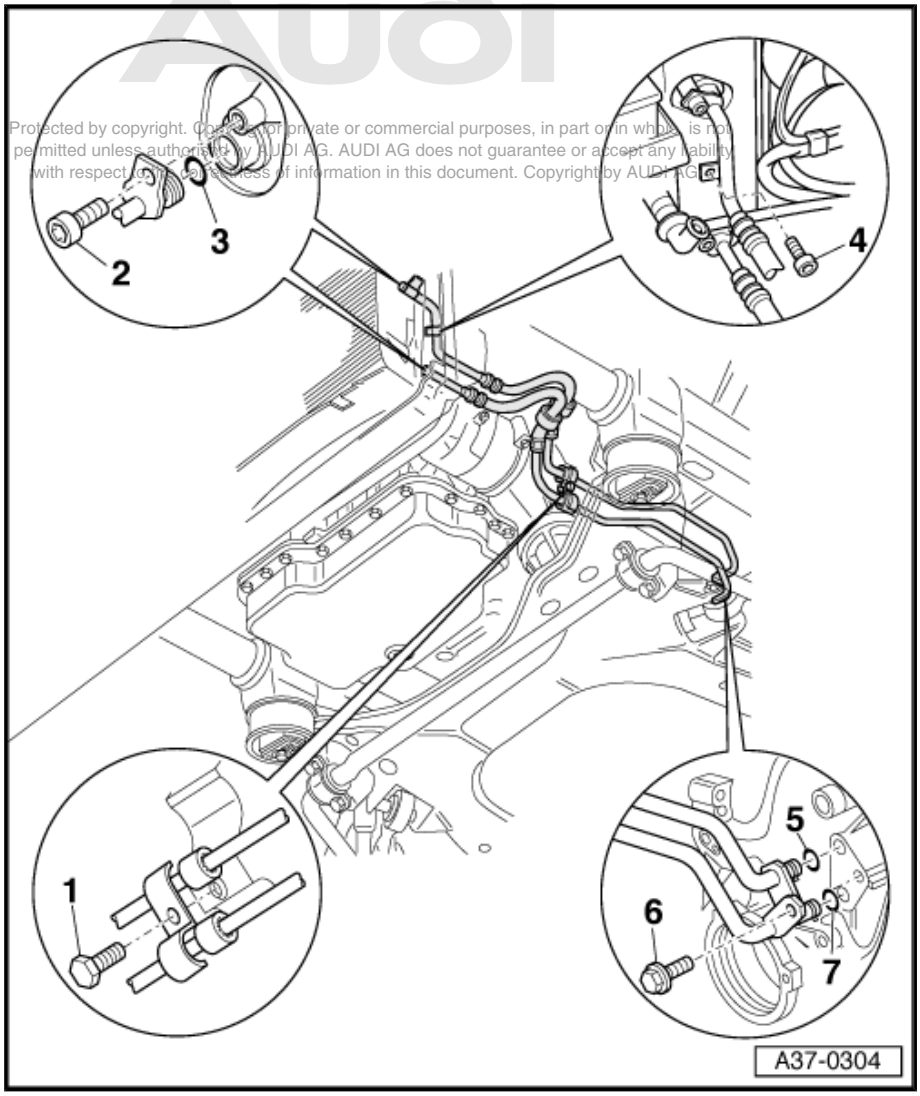

Protected by copyright. Copying for private or commercial purposes, in part or in whole, is not permitted unless authorised by AUDI AG. AUDI AG does not guarantee or accept any liability with respect to the correctness of information in this document. Copyright by AUDI AG.

4.3 ATF pipes (6-cylinder TDI engines) - exploded view of components

Note

- *General repair instructions* ⇒ page 16 .
- *Observe rules for cleanliness when working on automatic gearbox* ⇒ page 19 .

1 - Bolt, 5 Nm

2 - O-ring
- ❑ Renew
- ❑ Lubricate with ATF when fitting

3 - Bolt, 5 Nm

4 - O-ring
- ❑ Renew
- ❑ Lubricate with ATF when fitting

5 - Union nut, 25 Nm

6 - Union nut, 25 Nm

7 - Protective sleeve
- ❑ Fit at distance -a- = 27 mm

8 - Bolt, 26 Nm

9 - Bolt, 25 Nm

10 - Combi-bolt, 5 Nm

11 - Bolt, 21 Nm

12 - O-rings
- ❑ Renew
- ❑ Lubricate with ATF when fitting

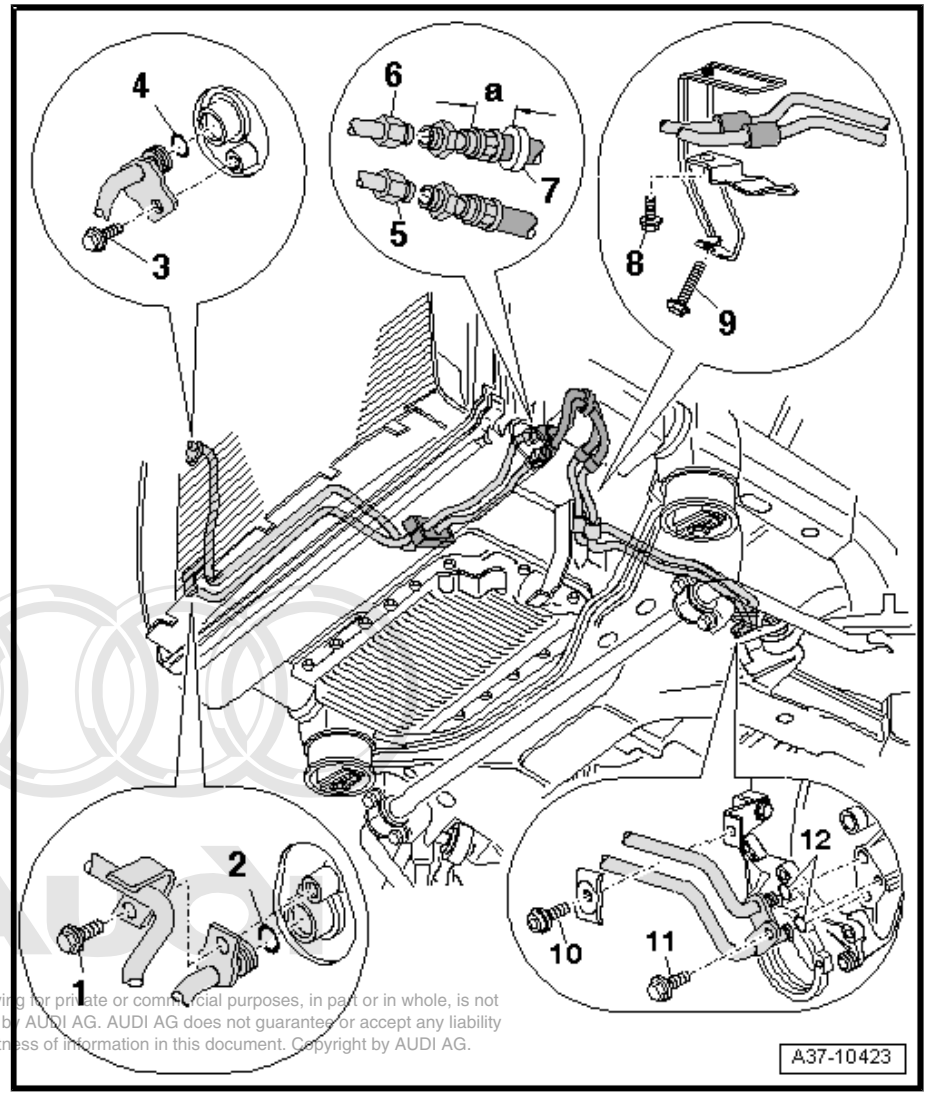

Protected by copyright. Copying for private or commercial purposes, in part or in whole, is not permitted unless authorised by AUDI AG. AUDI AG does not guarantee or accept any liability with respect to the correctness of information in this document. Copyright by AUDI AG.

4.4 Auxiliary ATF cooler - exploded view of components

Note

- *General repair instructions* *⇒ page 16* .
- *Observe rules for cleanliness when working on automatic gearbox* *⇒ page 19* .

1 - Air duct
- ❑ For auxiliary ATF cooler

2 - Auxiliary ATF cooler

3 - Union nut, 25 Nm

4 - Union nut, 25 Nm

5 - Bolt, 10 Nm

6 - Bracket
- ❑ For auxiliary ATF cooler

7 - Bolt, 10 Nm

8 - Sleeve

9 - Rubber grommet
- ❑ Button into eye on auxiliary ATF cooler

10 - Nut, 5 Nm

11 - Bolt, 5 Nm

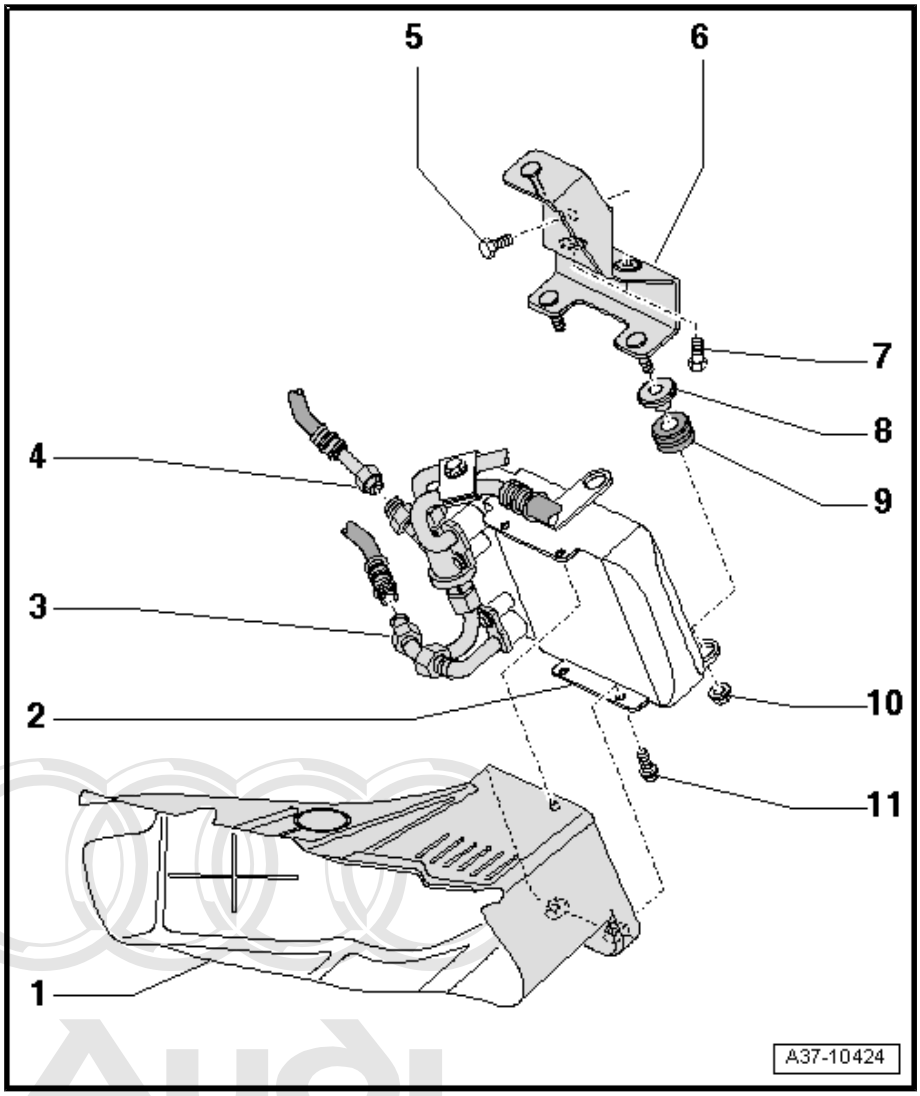

4.5 Removing and installing ATF pipes

Copyright by AUDI AG. Copying or publication for commercial purposes, in part or in whole, is not permitted unless authorised by AUDI AG. AUDI AG does not guarantee or accept any liability with respect to the correctness of information in this document. Copyright by AUDI AG.

Special tools and workshop equipment required

- Used oil collection and extraction unit -V.A.G 1782-

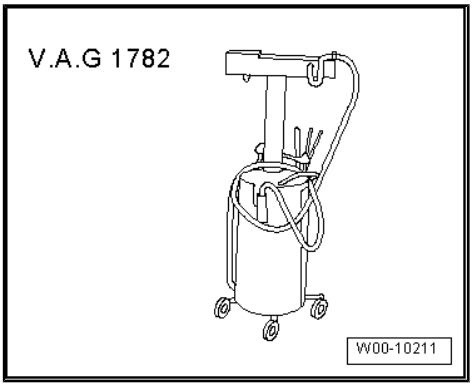

- Safety goggles

Note

- *Observe rules for cleanliness when working on automatic gearbox ⇒ page 19 .*
- *Thoroughly clean all joints and surrounding areas before dismantling.*

Removing

– Mark position of all ATF pipes in relation to one another with different colours to avoid confusion.

– Place drip tray of used oil collection and extraction unit -V.A.G 1782- underneath gearbox.

WARNING

Wear safety goggles.

Protected by copyright. Copying for private or commercial purposes, in part or in whole, is not permitted unless authorised by AUDI AG. AUDI AG does not guarantee or accept any liability with respect to the correctness of information in this document. Copyright by AUDI AG.

– Detach ATF pipes.

– Seal opened ATF pipes with clean sealing plugs.

Installing

Installation is carried out in reverse sequence; note the following:

– Clean ATF pipes and ATF cooler ⇒ page 91 .

– Renew O-rings and lubricate them lightly with ATF.

– First push ATF pipes fully into gearbox or cooler by hand, then secure pipes.

– Check ATF level ⇒ page 76 .

4.6 Cleaning ATF pipes and ATF cooler

Special tools and workshop equipment required

- Used oil collection and extraction unit -V.A.G 1782-

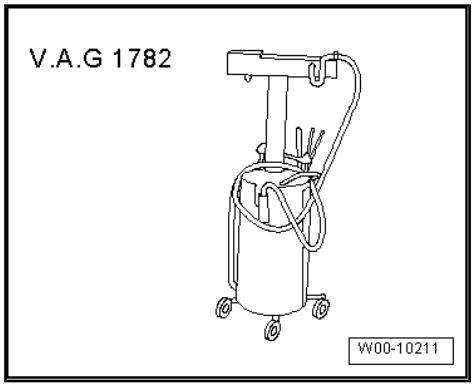

- Safety goggles
- Compressed air gun (commercially available)
- Hose, approx. 18 mm dia.

Note

- *Always clean ATF pipes and ATF cooler before installing replacement gearbox.*
- *Observe rules for cleanliness when working on automatic gearbox* ⇒ page 19 .
- *Thoroughly clean all joints and surrounding areas before dismantling.*

Procedure

– Place drip tray of used oil collection and extraction unit -V.A.G 1782- underneath gearbox.

– Remove bolt -2-.

– Connect a hose of approx. 18 mm dia. to ATF pipe -A- and secure with a hose clip. Place other end of hose in drip tray.

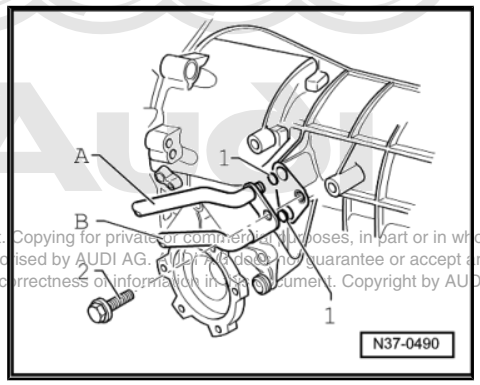

Protected by copyright. Copying for private or commercial purposes, in part or in whole, is not permitted unless authorised by AUDI AG. AUDI AG does not guarantee or accept any liability with respect to the correctness of information in this document. Copyright by AUDI AG.

WARNING

Wear safety goggles.

– Blow through ATF pipe -B- using a compressed air line (max. 10 bar).

– Change hose from ATF pipe -A- over to ATF pipe -B- and repeat sequence.

Note

If the ATF which emerges during cleaning is very dirty, the pipes and ATF cooler must additionally be flushed out with clean ATF.

– First insert ATF pipes into gearbox or ATF cooler by hand as far as they will go, then bolt on ⇒ page 87 .

– Check ATF level ⇒ page 76 .

38 – Gears, control

1 Removing and installing ATF oil pan, ATF strainer and valve body

Caution

Do not run engine or tow vehicle with ATF oil pan removed or when there is no ATF in the gearbox.

Note

- *General repair instructions ⇒ page 16 .*
- *Observe rules for cleanliness when working on automatic gearbox ⇒ page 19 .*
- *Always renew valve body if it has collected dirt or if it is defective.*
- *Lightly lubricate O-rings and seals with ATF. Other lubricants will cause malfunction of the gearbox hydraulics.*

Protected by copyright. Copying for private or commercial purposes, in part or in whole, is not permitted unless authorised by AUDI AG. AUDI AG does not guarantee or accept any liability with respect to the correctness of information in this document. Copyright by AUDI AG.

1.1 Different hydraulic control systems

- There are two different gearbox types: Gearbox with hydraulic control type “E17”, in which the gearbox input speed sender (inductive sender) is attached to the underside of the valve body. Gearbox with hydraulic control type “E18/2”, in which the gearbox input speed sender (Hall sender) is attached to the gearbox housing behind the valve body.
- The tables ⇒ page 2 indicate which type of gearbox is installed.

1.2 Gearbox with hydraulic control type “E17” - exploded view of components

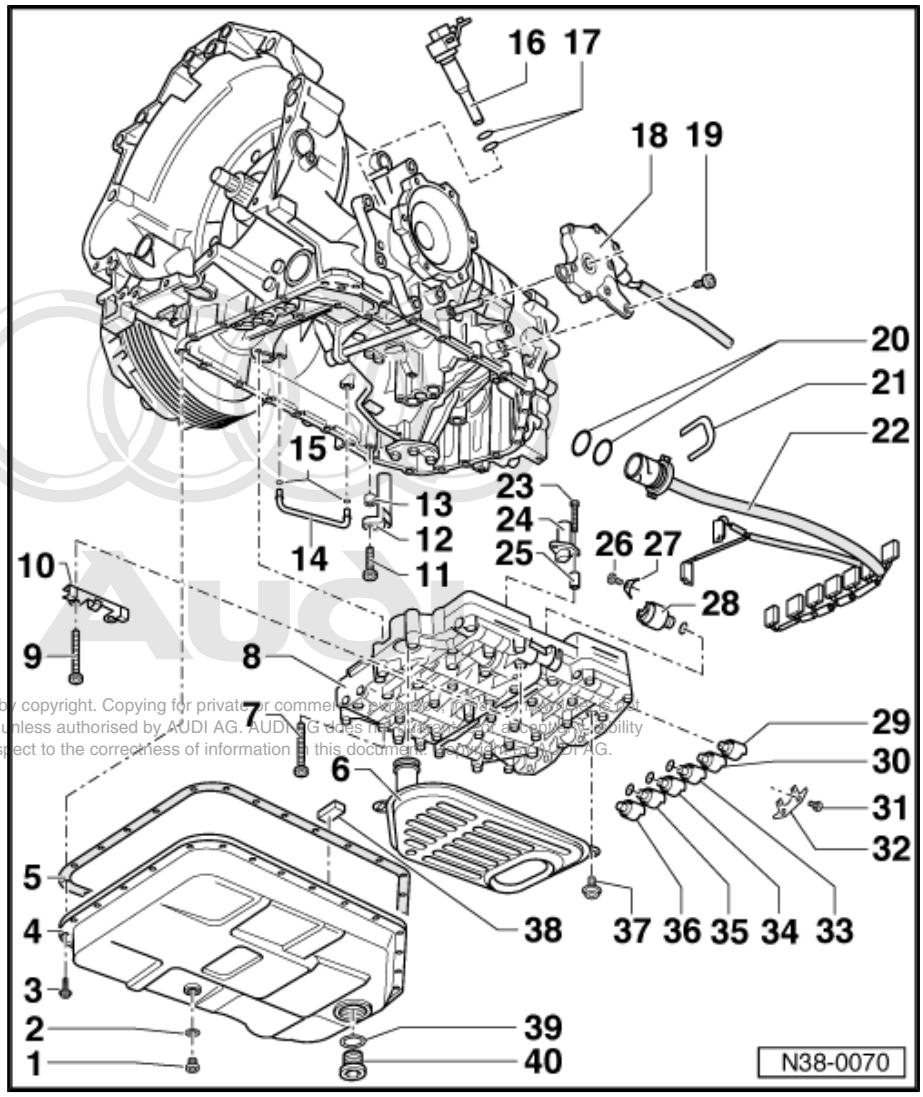

Protected by copyright. Copying for private or commercial purposes, in part or in whole, is not permitted unless authorised by AUDI AG. AUDI AG does not guarantee or assume any liability with respect to the correctness of information in this document. Copyright by AUDI AG.

1 - ATF drain plug, 40 Nm
- ❑ Renew

2 - Seal
- ❑ Cannot be renewed separately

3 - Bolt, 10 Nm
- ❑ Tighten in stages and in diagonal sequence

4 - ATF oil pan
- ❑ Removing and installing ⇒ page 98

5 - Gasket
- ❑ Renew

6 - ATF strainer
- ❑ Removing and installing ⇒ page 100

7 - Bolt, 8 Nm
- ❑ Follow correct tightening sequence ⇒ Servicing automatic gearbox 01V, front-wheel drive and four-wheel drive; Rep. Gr. 38

8 - Valve body
- ❑ Removing and installing ⇒ Servicing automatic gearbox 01V, front-wheel drive and four-wheel drive; Rep. Gr. 38
- ❑ Select correct version according to gearbox code letters ⇒ Electronic parts catalogue

9 - Bolt, 8 Nm

10 - Bracket for wiring harness

11 - Bolt, 6 Nm

12 - Gearbox speed sender -G38-
- ❑ Removing and installing ⇒ Servicing automatic gearbox 01V, front-wheel drive and four-wheel drive; Rep. Gr. 38

13 - Spacer sleeve
- ❑ Length: 8 mm

14 - Internal oil pipe
- ❑ Renew
- ❑ Removing and installing ⇒ Servicing automatic gearbox 01V, front-wheel drive and four-wheel drive; Rep. Gr. 38

15 - O-ring
- ❑ Renew

16 - Speedometer sender -G22-
- ❑ Removing and installing ⇒ page 102

17 - O-ring
- ❑ Renew
- ❑ Lubricate with ATF when installing

18 - Multi-function switch -F125-
- ❑ Removing and installing ⇒ page 101
- ❑ Renewing oil seal for selector shaft ⇒ page 103

19 - Bolt, 8 Nm

20 - O-ring
- ❑ Renew

21 - Retaining clip

22 - Wiring harness
- ❑ With integrated gearbox oil temperature sender -G93-
- ❑ Removing and installing ⇒ Servicing automatic gearbox 01V, front-wheel drive and four-wheel drive; Rep. Gr. 38

23 - Bolt, 6 Nm

24 - Gearbox input speed sender -G182-
- ❑ Removing and installing ⇒ Servicing automatic gearbox 01V, front-wheel drive and four-wheel drive; Rep. Gr. 38

25 - Spacer sleeve
- ❑ Length: 20 mm

26 - Bolt, 6 Nm

27 - Retainer for solenoid valve

28 - Solenoid valve 4 -N91-
- ❑ With O-ring
- ❑ To renew, remove valve body ⇒ Servicing automatic gearbox 01V, front-wheel drive and four-wheel drive; Rep. Gr. 38

29 - Solenoid valve 3 -N90-
- ❑ Without O-ring
- ❑ To renew, remove ATF oil pan ⇒ page 98

30 - Solenoid valve 2 -N89-
- ❑ Without O-ring
- ❑ To renew, remove ATF oil pan ⇒ page 98

Protected by copyright. Copying for private or commercial purposes, in part or in whole, is not permitted unless authorised by AUDI AG. AUDI AG does not guarantee or accept any liability with respect to the correctness of information in this document. Copyright by AUDI AG.

31 - Bolt, 6 Nm

32 - Retainer for solenoid valves

33 - Solenoid valve 6 -N93-
- ❑ With O-ring
- ❑ To renew, remove ATF oil pan ⇒ page 98

34 - Solenoid valve 7 -N94-
- ❑ With O-ring
- ❑ To renew, remove ATF oil pan ⇒ page 98

35 - Solenoid valve 5 -N92-
- ❑ With O-ring
- ❑ To renew, remove ATF oil pan ⇒ page 98

36 - Solenoid valve 1 -N88-
- ❑ Without O-ring
- ❑ To renew, remove ATF oil pan ⇒ page 98 and unbolt guide plate for parking lock mechanism

- ❑ When installing, do not tighten bolts for guide plate (23 Nm) with selector lever in “P” position

37 - Bolt, 6 Nm

38 - Magnet

- ❑ Qty. 4; located in recesses on oil ATF pan

39 - O-ring

- ❑ Renew

40 - ATF inspection plug, 80 Nm

- ❑ Renew seal

1.3 Gearbox with hydraulic control type “E18/2” - exploded view of components

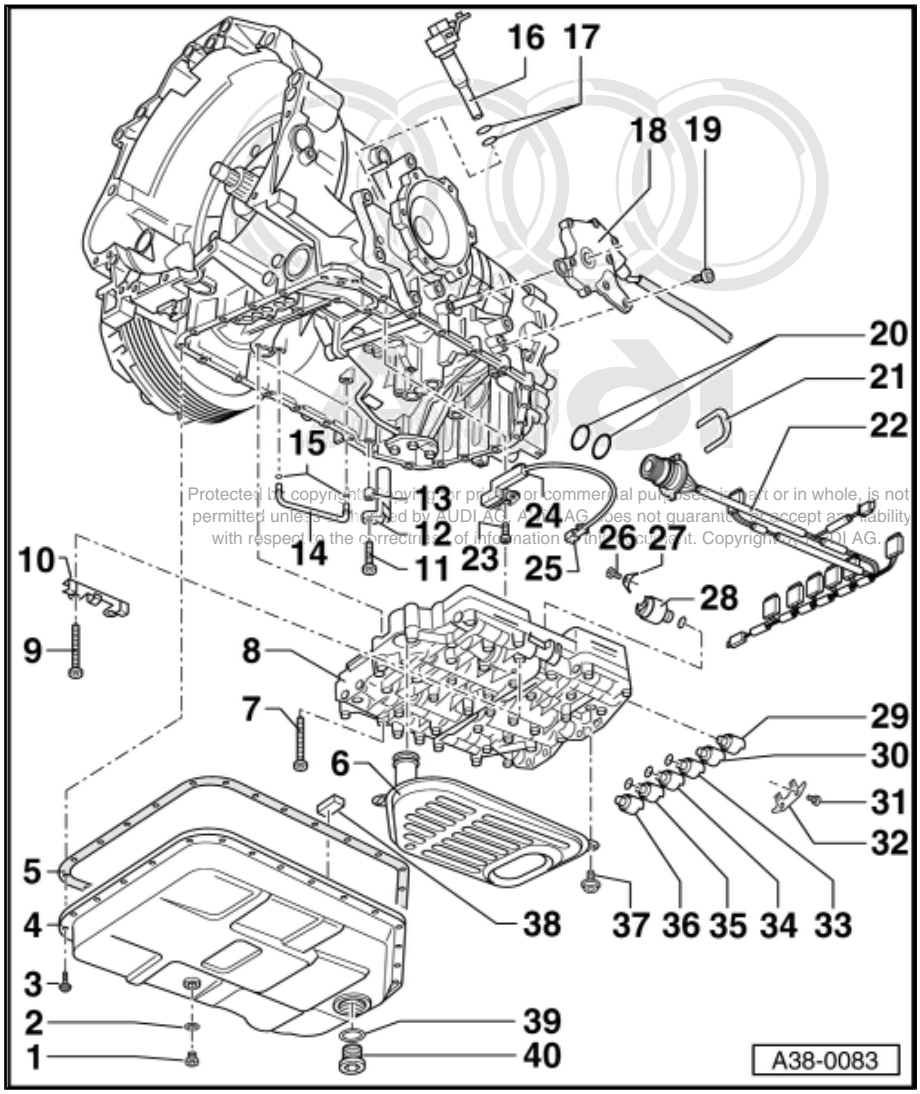

1 - ATF drain plug, 40 Nm

- ❑ Renew

2 - Oil seal

- ❑ Cannot be renewed separately

3 - Bolt, 10 Nm

- ❑ Tighten in stages and in diagonal sequence

4 - ATF oil pan

- ❑ Removing and installing ⇒ page 98

5 - Gasket

- ❑ Renew

6 - ATF strainer

- ❑ Removing and installing ⇒ page 100

7 - Bolt, 8 Nm

- ❑ Follow correct tightening sequence ⇒ Servicing automatic gearbox 01V, front-wheel drive and four-wheel drive; Rep. Gr. 38

8 - Valve body

- ❑ Removing and installing ⇒ Servicing automatic gearbox 01V, front-wheel drive and four-wheel drive; Rep. Gr. 38
- ❑ Select correct version according to gearbox code letters ⇒ Electronic parts catalogue

9 - Bolt, 8 Nm

10 - Bracket

- ❑ For wiring harness

11 - Bolt, 6 Nm

12 - Gearbox speed sender -G38- / gearbox output speed sender -G195-

- ❑ Removing and installing ⇒ Servicing automatic gearbox 01V, front-wheel drive and four-wheel drive; Rep. Gr. 38

13 - Spacer sleeve

- ❑ Length: 8 mm

14 - Internal oil pipe

- ❑ Renew
- ❑ Removing and installing ⇒ Servicing automatic gearbox 01V, front-wheel drive and four-wheel drive; Rep. Gr. 38

15 - O-ring

- ❑ Renew

16 - Speedometer sender -G22-

- ❑ Removing and installing ⇒ page 102

17 - O-ring

- ❑ Renew
- ❑ Lubricate with ATF when installing

18 - Multi-function switch -F125-

- ❑ Removing and installing ⇒ page 101
- ❑ Renewing oil seal for selector shaft ⇒ page 103

19 - Bolt, 8 Nm

20 - O-ring

- ❑ Renew

21 - Retaining clip

22 - Wiring harness in gearbox

- ❑ With integrated gearbox oil temperature sender -G93-
- ❑ Removing and installing ⇒ Servicing automatic gearbox 01V, front-wheel drive and four-wheel drive; Rep. Gr. 38

23 - Bolt, 9 Nm

Protected by copyright. Copying for private or commercial purposes, in part or in whole, is not permitted unless authorised by AUDI AG. AUDI AG does not guarantee or accept any liability with respect to the correctness of information in this document. Copyright by AUDI AG.

24 - Gearbox input speed sender -G182-

- ❑ Removing and installing ⇒ Servicing automatic gearbox 01V, front-wheel drive and four-wheel drive; Rep. Gr. 38

25 - Electrical connector

- ❑ Is connected to wiring harness in gearbox

26 - Bolt, 6 Nm

27 - Retainer for solenoid valve

28 - Solenoid valve 4 -N91-

- ❑ With O-ring
- ❑ To renew, remove valve body ⇒ Servicing automatic gearbox 01V, front-wheel drive and four-wheel drive; Rep. Gr. 38

29 - Solenoid valve 3 -N90-

- ❑ Without O-ring
- ❑ To renew, remove ATF oil pan ⇒ page 98

30 - Solenoid valve 2 -N89-

- ❑ Without O-ring
- ❑ To renew, remove ATF oil pan ⇒ page 98

31 - Bolt, 6 Nm

32 - Retainer for solenoid valves

33 - Solenoid valve 6 -N93-

- ❑ With O-ring
- ❑ To renew, remove ATF oil pan ⇒ page 98

34 - Solenoid valve 7 -N94-

- ❑ With O-ring
- ❑ To renew, remove ATF oil pan ⇒ page 98

35 - Solenoid valve 5 -N92-

- ❑ With O-ring
- ❑ To renew, remove ATF oil pan ⇒ page 98

36 - Solenoid valve 1 -N88-

- ❑ Without O-ring
- ❑ To renew, remove ATF oil pan ⇒ page 98 and unbolt guide plate for parking lock mechanism
- ❑ When installing, do not tighten bolts for guide plate (23 Nm) with selector lever in “P” position

37 - Bolt, 6 Nm

38 - Magnet

- ❑ Qty. 4; located in recesses on oil ATF pan

39 - O-ring

- ❑ Renew

40 - ATF inspection plug, 80 Nm

- ❑ Renew seal

1.4 Removing and installing ATF oil pan

Special tools and workshop equipment required

- ♦ Used oil collection and extraction unit -V.A.G 1782-

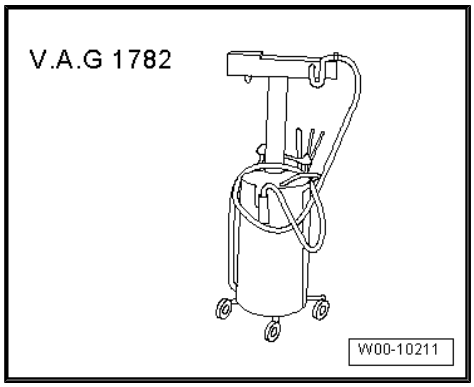

- ♦ Safety goggles

Removing

Note

- ♦ *General repair instructions* *⇒ page 16* *.*
- ♦ *Observe rules for cleanliness when working on automatic gearbox* *⇒ page 19* *.*

Protected by copyright. Copying for private or commercial purposes, in part or in whole, is not permitted unless authorised by AUDI AG. AUDI AG does not guarantee or accept any liability with respect to the correctness of information in this document. Copyright by AUDI AG.

– On vehicles fitted with auxiliary heater, remove screws -arrows- securing exhaust pipe of auxiliary/ additional heater to noise insulation.

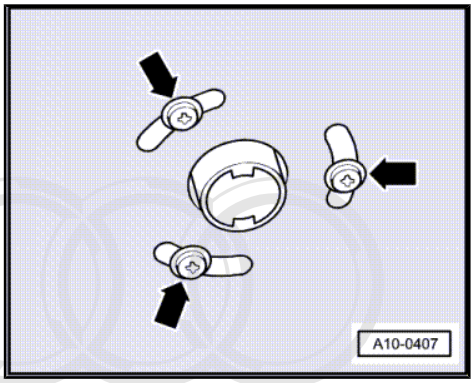

– Release quick-release fasteners -1- and detach front and – if fitted – rear noise insulation.

– Drain ATF ⇒ page 83 .

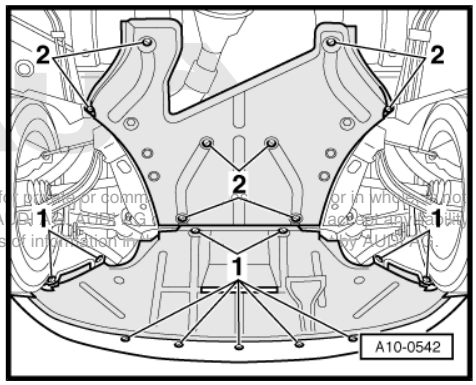

Protected by copyright. Copying for private or commercial purposes, in part or in whole, is not permitted unless authorised by AUDI AG. AUDI AG does not guarantee or accept any liability with respect to the correctness of information in this document.

– Place used oil collection and extraction unit -V.A.G 1782- below gearbox.

– Slacken bolts on ATF oil pan -arrow- in diagonal sequence and remove oil pan.

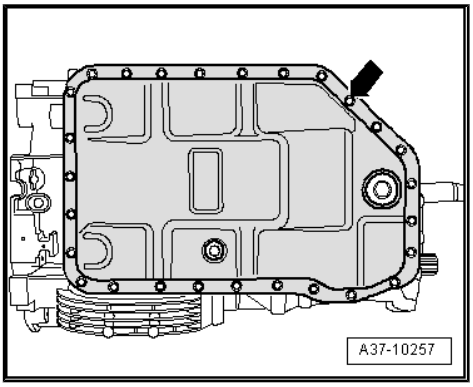

Installing

Installation is carried out in reverse sequence; note the following:

Note

Renew seals and gaskets.

– Clean all magnets in recesses on ATF oil pan. Ensure that magnets make full contact with ATF oil pan.

– Clean sealing surface thoroughly; remaining material from the previous gasket must be removed completely.

– Tighten bolts for ATF oil pan progressively in diagonal sequence.

– Fill up with ATF ⇒ page 83 .

Tightening torque

Component	Nm
ATF oil pan to gearbox housing	10 [1)]
• [1)] Tighten diagonally in stages.	

1.5 Removing and installing ATF strainer

Removing

Note

- *General repair instructions ⇒ page 16 .*
- *Observe rules for cleanliness when working on automatic gearbox ⇒ page 19 .*

– Drain ATF ⇒ page 83 .

– Remove ATF oil pan ⇒ page 98 .

– Remove bolts -arrows-.

– Carefully detach ATF strainer from valve body.

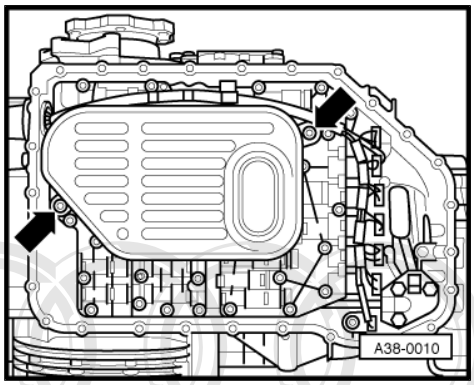

Installing

Installation is carried out in reverse sequence; note the following:

– Lightly lubricate the seal around the intake neck of the ATF strainer with ATF.

– Carefully press intake neck of ATF strainer into opening on valve body until stop.

– Install ATF oil pan ⇒ page 98 .

– Fill up with ATF ⇒ page 83 .

Tightening torque

Component	Nm
ATF strainer to valve body	5

1.6 Removing and installing valve body

– Drain ATF ⇒ page 83 .

– Remove ATF oil pan ⇒ page 98 .

– Removing and installing valve body ⇒ Servicing automatic gearbox 01V, front-wheel drive and four-wheel drive; Rep. Gr. 38 .

Protected by copyright. Copying for private or commercial purposes, in part or in whole, is not permitted unless authorised by AUDI AG. AUDI AG does not guarantee or accept any liability with respect to the correctness of information in this document. Copyright by AUDI AG.

1.7 Removing and installing internal oil pipe

Note

Defective O-rings on the internal oil pipe will allow ATF to leak into the differential, which will become overfilled and cause oil to drip out at the differential breather.

– Drain ATF ⇒ page 83 .

– Remove ATF oil pan ⇒ page 98 .

– Removing and installing internal oil pipe ⇒ Servicing automatic gearbox 01V, front-wheel drive and four-wheel drive; Rep. Gr. 38 .

1.8 Removing and installing multi-function switch -F125-

Removing

– Remove gearbox support (left-side) ⇒ page 73 .

– Detach electrical connector -2- at multi-function switch -F125- .

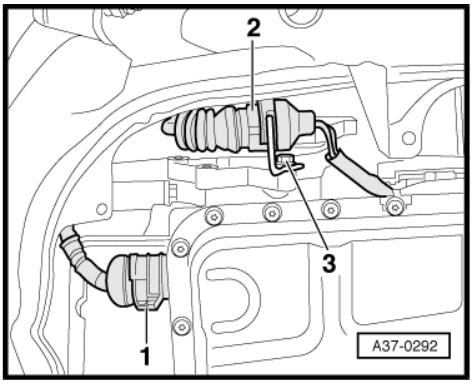

Note

-Item 1- and -item 3- can be disregarded.

Protected by copyright. Copying for private or commercial purposes, in part or in whole, is not permitted unless authorised by AUDI AG. AUDI AG does not guarantee or accept any liability with respect to the correctness of information in this document. Copyright by AUDI AG.

– Remove multi-function switch -F125- -arrows-.

– Move wiring harness clear and detach multi-function switch -F125- from selector shaft.

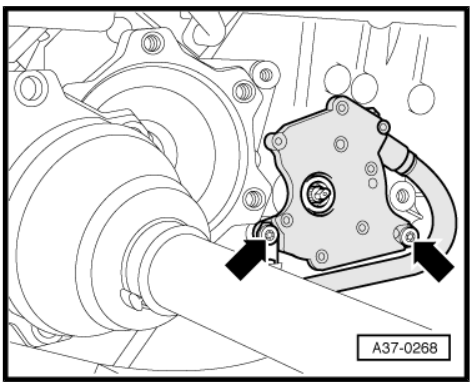

Installing

Installation is carried out in reverse sequence; note the following:

– Fit multi-function switch -F125- onto selector shaft.

• The flat surface in the splines of the switch -3- must coincide with the flat surface on the selector shaft -1-.

– Position multi-function switch -F125- centrally on selector shaft.

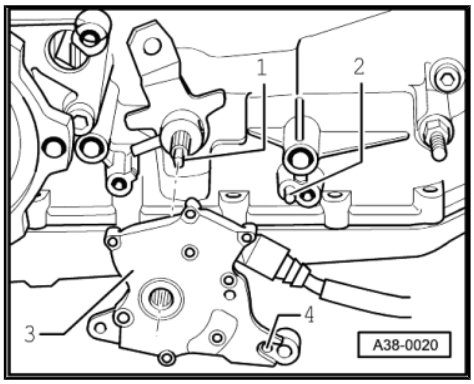

Note

Keep multi-function switch -F125- straight and install without using force to prevent the switch contacts from being damaged.

– Turn switch so that drilling -4- on switch housing can be fitted on locating pin -2- on gearbox housing.

– Install gearbox support (left-side) ⇒ page 73 .

Tightening torque

Component	Nm
Multi-function switch -F125- to gearbox	8

1.9 Removing and installing gearbox speed sender -G38- / gearbox output speed sender -G195-

– Drain ATF ⇒ page 83 .

– Remove ATF oil pan ⇒ page 98 .

– Removing and installing gearbox speed sender -G38- ⇒ Servicing automatic gearbox 01V, front-wheel drive and four-wheel drive; Rep. Gr. 38 .

1.10 Removing and installing speedometer sender -G22-

Removing

– Unplug electrical connector -arrow A- for speedometer sender -G22- on gearbox.

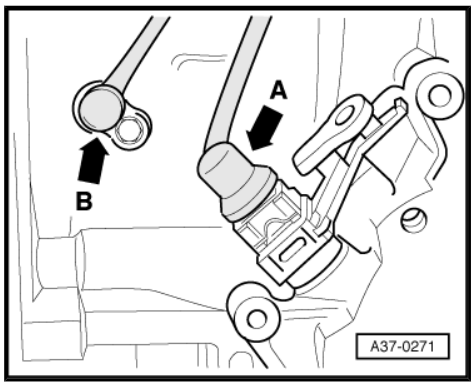

Note

-Arrow B- can be disregarded.

– Push down the retaining clip holding the speedometer sender -G22- , turn it, and pull out the sender.

Installing

Installation is carried out in reverse sequence; note the following:

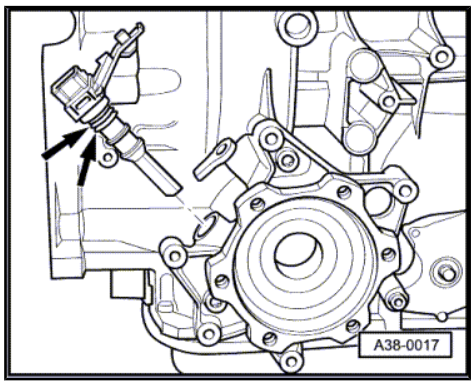

Note

Renew O-rings.

– Apply a thin coating of ATF to O-rings -arrows- before fitting.

– Fit speedometer sender -G22- and engage retaining clip on bearing bracket for flange shaft.

1.11 Removing and installing gearbox input speed sender -G182-

Note

- *There are two different gearbox types: Gearbox with hydraulic control type "E17", in which the gearbox input speed sender (inductive sender) is attached to the underside of the valve body. Gearbox with hydraulic control type "E18/2", in which the gearbox input speed sender (Hall sender) is attached to the gearbox housing behind the valve body.*
- *The tables ⇒ page 2 indicate which type of gearbox is installed.*

– Drain ATF ⇒ page 83 .

– Remove ATF oil pan ⇒ page 98 .

– Removing and installing gearbox input speed sender -G182- ⇒ Servicing automatic gearbox 01V, front-wheel drive and four-wheel drive; Rep. Gr. 38 .

Copyright by AUDI AG. Reproduction or translation in any other languages, in part or in whole, is not permitted without the written consent of AUDI AG. AUDI AG does not guarantee or accept any liability with respect to the correctness of information in this document. Copyright by AUDI AG.

1.12 Removing and installing wiring harness in gearbox

– Drain ATF ⇒ page 83 .

– Remove ATF oil pan ⇒ page 98 .

– Removing and installing wiring harness in gearbox ⇒ Servicing automatic gearbox 01V, front-wheel drive and four-wheel drive; Rep. Gr. 38 .

1.13 Removing and installing gearbox oil temperature sender -G93-

Note

The gearbox oil (ATF) temperature sender -G93- is integrated in the wiring harness in the gearbox. Removing and installing wiring harness ⇒ Servicing automatic gearbox 01V, front-wheel drive and four-wheel drive; Rep. Gr. 38 .

Protected by copyright. Copying for private or commercial purposes, in part or in whole, is not permitted unless authorised by AUDI AG. AUDI AG does not guarantee or accept any liability with respect to the correctness of information in this document. Copyright by AUDI AG.

1.14 Renewing oil seal for selector shaft

Special tools and workshop equipment required

♦ Removal lever -80-200-

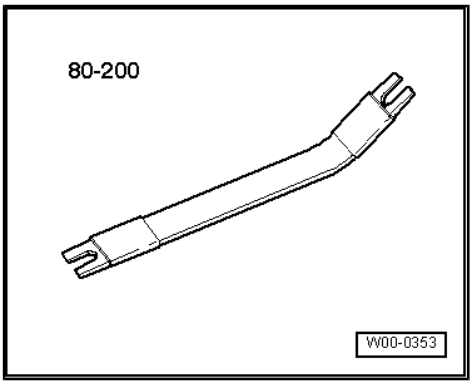

♦ Assembly sleeve -3385-

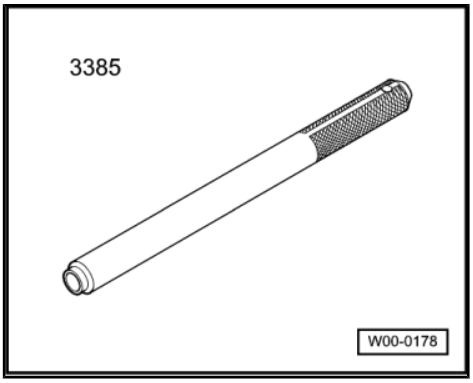

Procedure

– Remove gearbox support (left-side) ⇒ page 73 .

– Remove multi-function switch -F125- ⇒ page 101 .

– Use removal lever -80-200- to prise selector lever cable -1- off selector shaft lever -2- (remove retaining clip -arrow- if fitted).

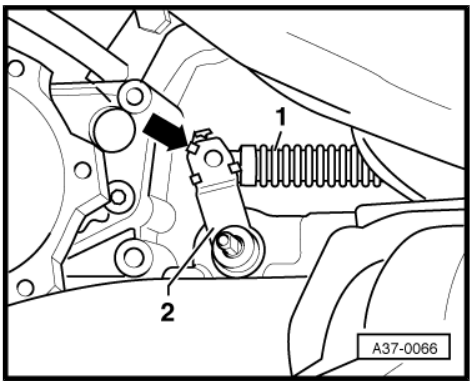

– Drive out roll pin -1- at selector shaft lever -2- towards the front -arrow- (as seen in direction of travel) until it is possible to detach selector shaft lever from selector shaft.

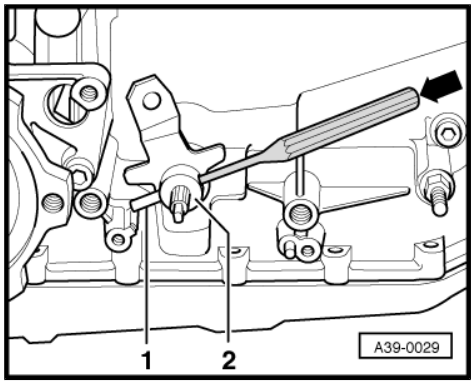

– Push a small screwdriver through the oil seal and pull it out.

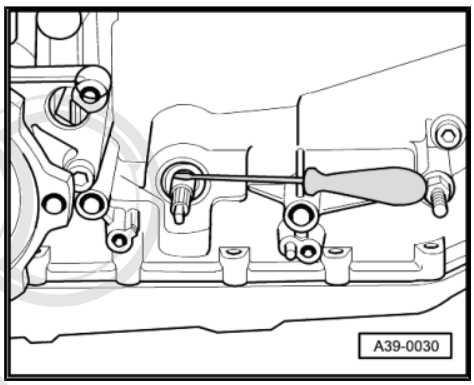

– Lightly lubricate outer circumference and sealing lip of new oil seal with ATF.

• Installation position: open side of oil seal points towards gearbox

Protected by copyright. Copying for private or commercial purposes, in part or in whole, is not permitted unless authorised by AUDI AG. AUDI AG does not guarantee or accept any liability with respect to the correctness of information in this document. Copyright by AUDI AG.

– Push new oil seal onto assembly sleeve -3385- and drive in until assembly sleeve reaches stop, ensuring that seal remains straight.

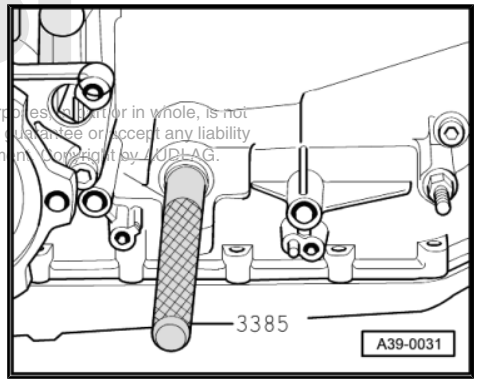

– Before installing, drive the roll pin in the selector shaft lever back through the lever in the opposite direction.

– Push selector shaft lever onto selector shaft and drive in roll pin.

– Install multi-function switch -F125- ⇒ page 101 .

– Install gearbox support (left-side) ⇒ page 73 .

1.15 Removing and installing housing for ATF supply unit (gearbox not dismantled)

Removing housing for ATF supply unit (gearbox not dismantled)
⇒ Servicing automatic gearbox 01V, front-wheel drive and four-wheel drive; Rep. Gr. 38 .

39 – Final drive - rear differential

1 Gear oil in rear final drive

1.1 Checking gear oil in rear final drive

Special tools and workshop equipment required

♦ Used oil collection and extraction unit -V.A.G 1782-

Protected by copyright. Copying for private or commercial purposes, in part or in whole, is not permitted unless authorised by AUDI AG. AUDI AG does not guarantee or accept any liability with respect to the correctness of information in this document. Copyright by AUDI AG.

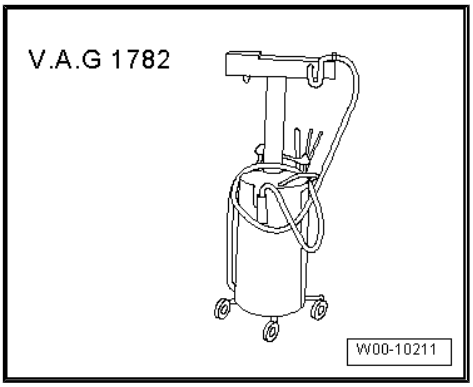

Procedure

– Place used oil collection and extraction unit -V.A.G 1782- underneath rear final drive.

– Remove oil filler plug -1- to check gear oil level.

• Specification: oil level up to bottom lip of filler hole

– Top up with gear oil if necessary; specification ⇒ page 11 .

– Tighten oil filler plug.

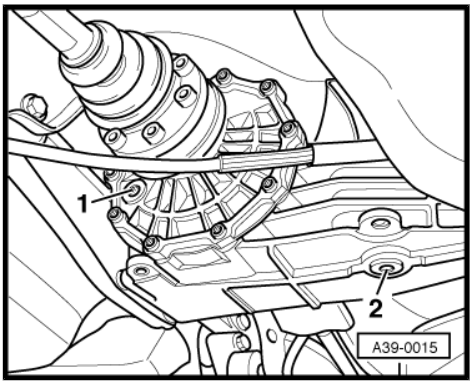

Tightening torque

Component	Nm
Oil filler plug	35

2 Servicing rear final drive

2.1 Renewing oil seal on flange for propshaft

Special tools and workshop equipment required

- Engine and gearbox jack -V.A.G 1383 A-
- Counterhold tool -3028-
- Drive flange installing tool -VW 391-
- Multi-purpose tool -VW 771-
- Puller hook -VW 771/37-
- Punch -3026-

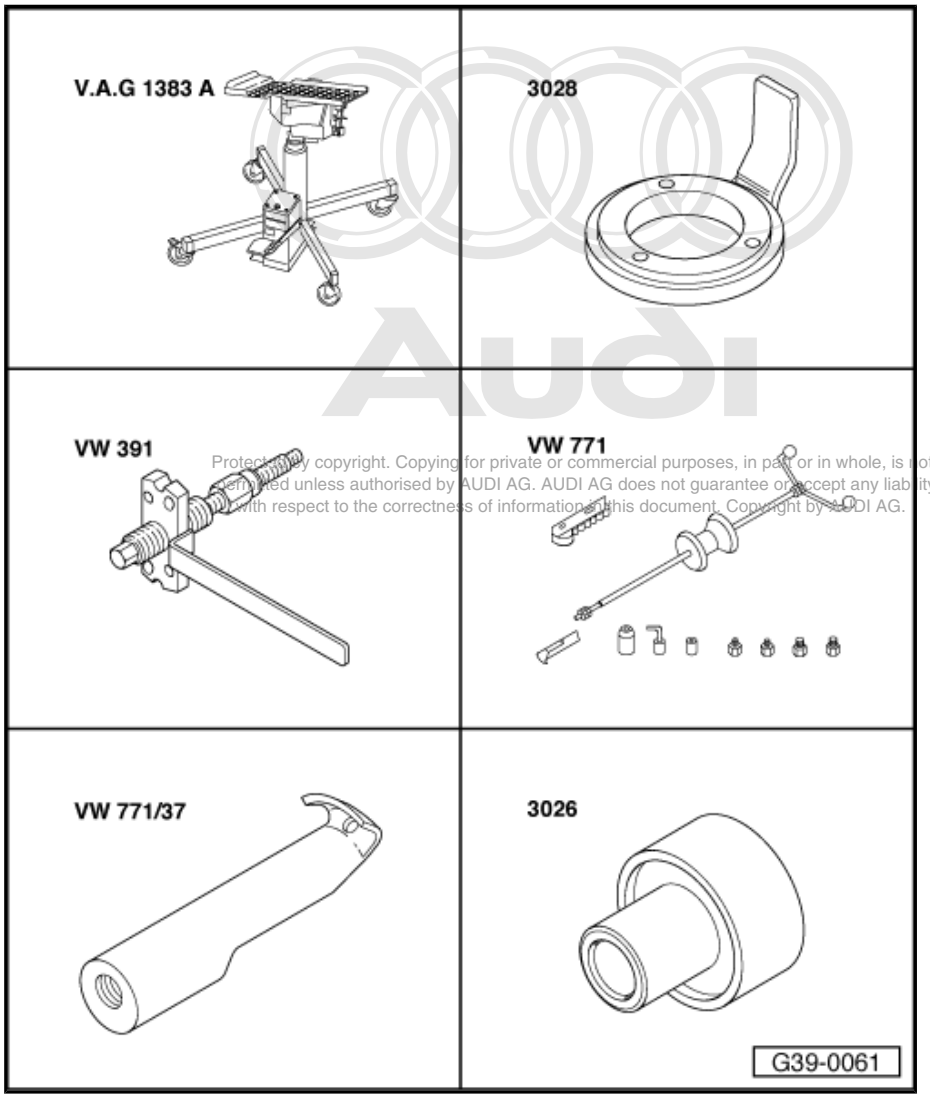

Protected by copyright. Copying for private or commercial purposes, in part or in whole, is not permitted unless authorised by AUDI AG. AUDI AG does not guarantee or accept any liability with respect to the correctness of information in this document. Copyright by AUDI AG.

- Drift sleeve -3143-

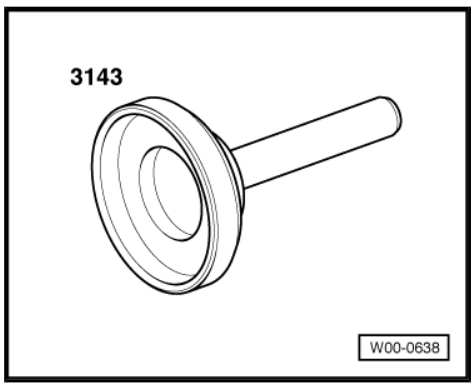

- Used oil collection and extraction unit -V.A.G 1782-

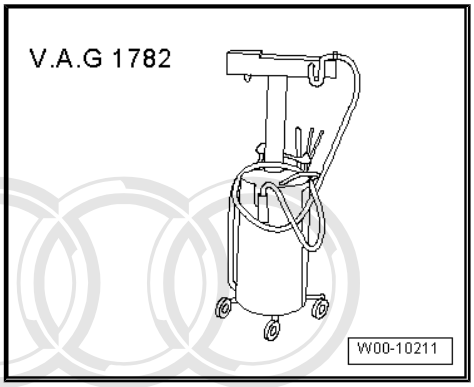

- Depth gauge
- Locking fluid -D 000 600-

Procedure

Protected by copyright. Copying for private or commercial purposes, in part or in whole, is not permitted unless authorised by AUDI AG. AUDI AG does not guarantee or accept any liability with respect to the correctness of information in this document. Copyright by AUDI AG.

Note

- *The oil seal can be renewed with the rear final drive remaining installed. But the final drive must be lowered.*
- *Repair instructions* ⇒ *page 16* *.*

– If fitted, remove cross member -arrows-.
– Loosen clamps -2-.
– Detach rear section of exhaust system -1- and remove.

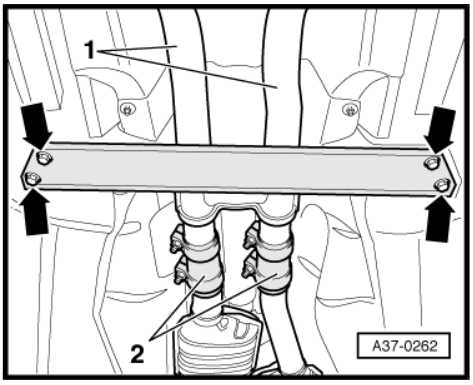

Note

Illustration shows vehicle with 6-cylinder petrol engine.

– Place used oil collection and extraction unit -V.A.G 1782- underneath rear final drive.
– Remove drain plug ⇒ Item 12 (page 120) and drain gear oil from rear final drive.

– Check whether there is a factory marking (coloured dot) on the propshaft. If no factory marking is visible, mark position of constant velocity joint on propshaft -arrow A- in relation to flange for propshaft on rear final drive -arrow B-.
– Unbolt propshaft from rear final drive.

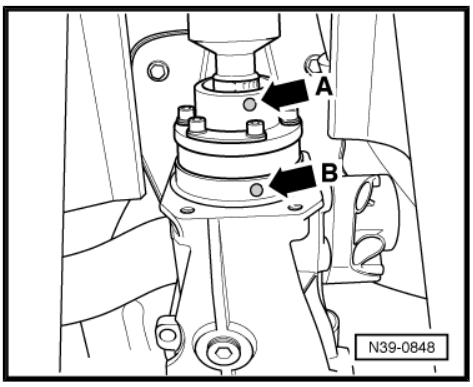

– Support propshaft against heat shield using a wooden wedge -1-.

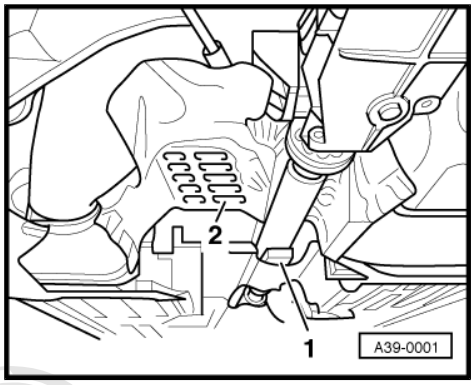

Note

-Item 2- can be disregarded.

– Place engine and gearbox jack -V.A.G 1383 A- with universal support -V.A.G 1359/2- below rear final drive and take up weight of final drive.

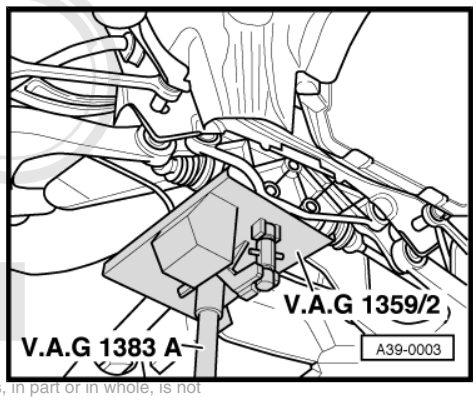

Protected by copyright. Copying for private or commercial purposes, in part or in whole, is not permitted unless authorised by AUDI AG. AUDI AG does not guarantee or accept any liability with respect to the correctness of information in this document. Copyright by AUDI AG.

– Remove securing bolts -arrows- of left support for rear final drive.

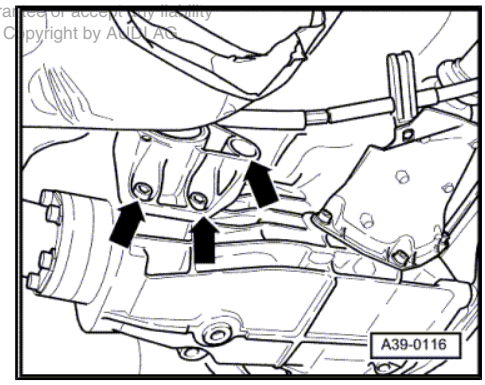

Note

The rear cross member/final drive securing bolts are not slackened.

– Carefully lower rear final drive using engine and gearbox jack -V.A.G 1383 A- until flange for propshaft is accessible.

– Mark position of pinion shaft nut with paint.

– To check when assembling, measure the following with a depth gauge and note the measurements:

- Dimension -a- = distance from flange for propshaft to pinion shaft.
- Dimension -b- = distance from flange for propshaft to pinion shaft nut.

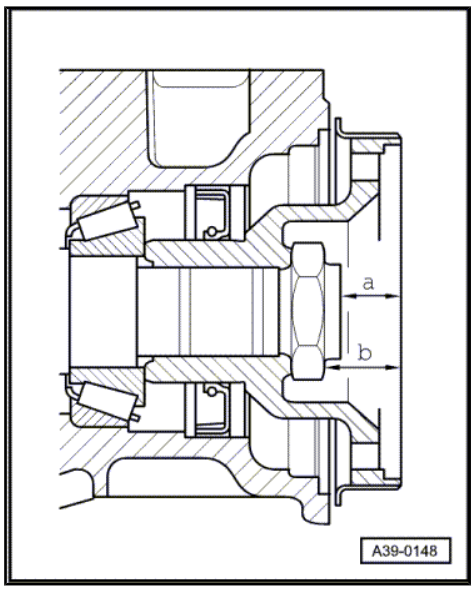

Note

The procedure is shown with the rear final drive removed to give a better illustration.

– Fit and secure counter-hold tool -3028- and remove pinion shaft nut.

– Place drip tray for workshop hoist -VAS 6208- under rear final drive.

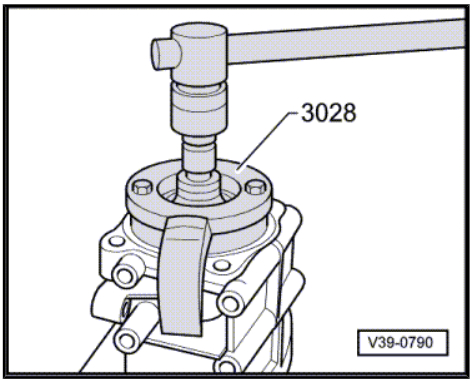

– Pull off flange for propshaft using drive flange installing tool -VW 391- ; to do this, screw 2 bolts (M8x30) -item A- into flange.

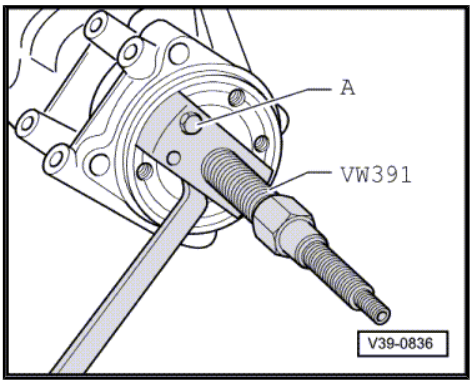

– Pull out oil seal.

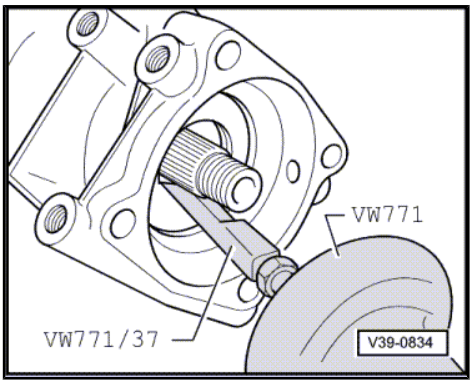

– Renew O-ring between pinion shaft bearing and flange for propshaft.

– Lightly lubricate new O-ring with gear oil.

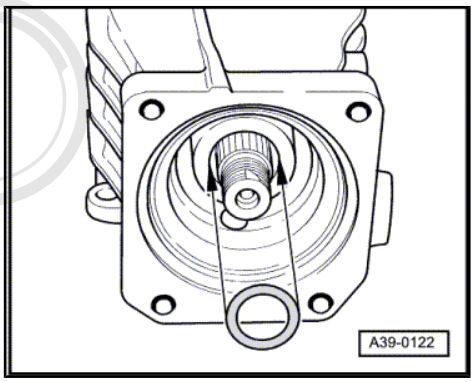

Protected by copyright. Copying for private or commercial purposes, in part or in whole, is not permitted unless authorised by AUDI AG. AUDI AG does not guarantee or accept any liability with respect to the correctness of information in this document. Copyright by AUDI AG.

– Lightly lubricate outer circumference of new oil seal with gear oil.

– Pack space between sealing lip and dust lip half-full with sealing grease -G 052 128 A1- .

– Use punch -3026- to drive home oil seal.

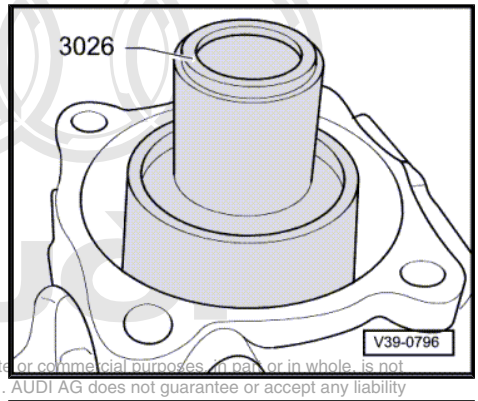

Protected by copyright. Copying for private or commercial purposes, in part or in whole, is not permitted unless authorised by AUDI AG. AUDI AG does not guarantee or accept any liability with respect to the correctness of information in this document. Copyright by AUDI AG.

– Drive flange for propshaft onto pinion shaft until securing nut for pinion shaft can be fitted.

– Remove any oil or grease residue from pinion shaft nut and thread of pinion shaft. Apply locking fluid -D 000 600- to thread.

• Make sure to use the "old" hexagon nut to attach the flange to the pinion shaft. Otherwise it will not be possible to re-install components in their original position.

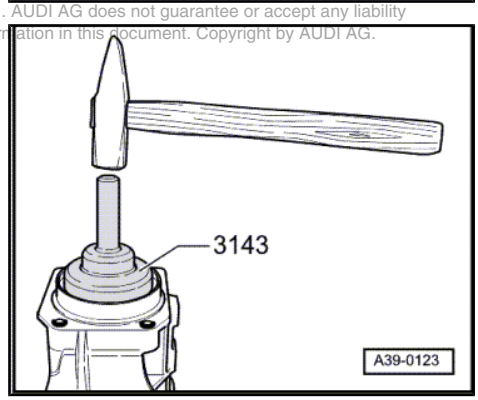

– Tighten pinion shaft nut exactly to previously marked position.

– To ensure that the assembly is correct, check measurements for dimensions -a- and -b-.

• O-ring -1- must always be fitted.

• Maximum permissible deviation from original measurements: ± 0.3 mm

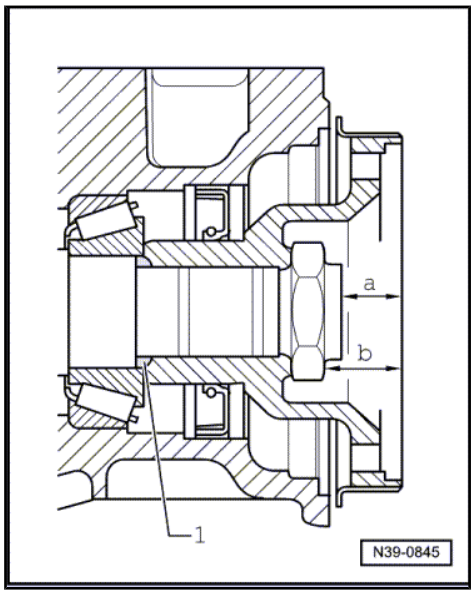

– Peen pinion shaft nut with a punch.

– Secure left support to rear final drive.

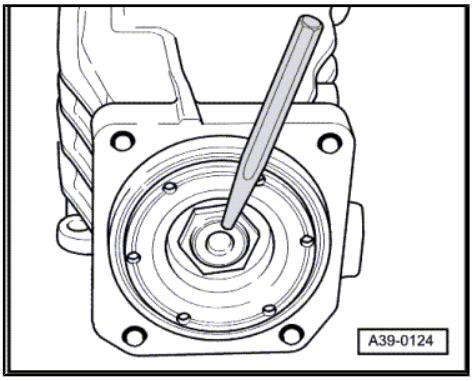

Note

- *Renew propshaft bolts (self-locking).*
- *After detaching the propshaft, it is important to clean out any locking fluid residues from threads of flange for propshaft on rear final drive. Otherwise there is a danger that the new bolts will seize when they are screwed in and then shear off the next time they are removed. The threads can be cleaned with a thread tap.*
- *After detaching the propshaft from the rear final drive, the additional balancing washer (thicker washer) that may be fitted between the lock plate and one of the bolt heads must not be reinstalled.*

– If there is a factory marking on the propshaft, measure radial run-out at flange for propshaft ⇒ page 111 and align paint marking on constant velocity joint of propshaft with marking on flange for propshaft.

– If the factory marking (coloured dot) on the propshaft was no longer visible and the position of the constant velocity joint of the propshaft was therefore marked relative to the flange for the propshaft on the rear final drive prior to removal, refit the propshaft in the same position.

– Secure propshaft to rear final drive ⇒ page 186 .

– Fill up gear oil in rear final drive and check oil level ⇒ page 105 .

– Align exhaust system so it is free of stress ⇒ Rep. Gr. 26 .

Tightening torques

Component	Nm
Left support to rear final drive	40
Cross member to body	25

2.2 Measuring and marking radial run-out at flange for propshaft

Note

- *The radial run-out must always be measured when the flange for the propshaft at the rear final drive has been removed.*
- *If a new propshaft is being installed and the marking on the flange for the propshaft is no longer visible, the point of maximum radial run-out must be measured with a dial gauge and marked with a coloured dot. The coloured dot on the constant velocity joint of the propshaft is then brought into alignment with this marking* *⇒ page 190* *.*
- *The radial run-out can also be measured with the rear final drive in position. This involves detaching the propshaft from the rear final drive. Observe notes* *⇒ page 185* *.*

Copyright by AUDI AG. Reproduction for commercial purposes, in part or in whole, is not permitted unless authorised by AUDI AG. AUDI AG does not guarantee or accept any liability with respect to the correctness of information in this document. Copyright by AUDI AG.

Special tools and workshop equipment required

- Universal dial gauge bracket -VW 387-

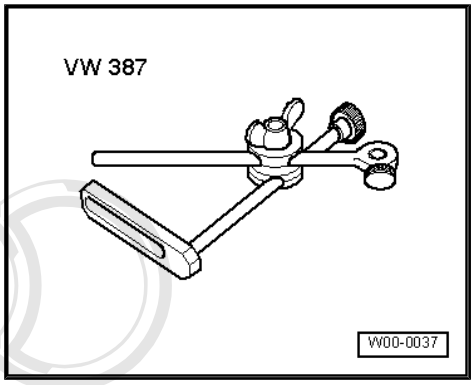

- Dial gauge
- Bolt M10x85

Procedure

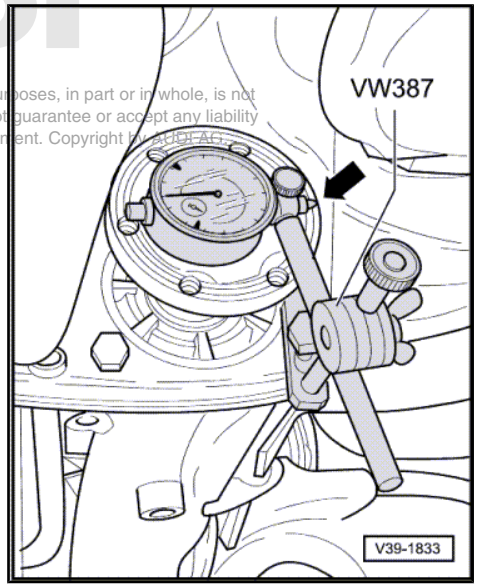

Any reproduction or other use of this document for commercial purposes, in part or in whole, is not permitted unless authorised by AUDI AG. AUDI AG does not guarantee or accept any liability with respect to the correctness of information in this document. Copyright by AUDI AG.

- Attach universal dial gauge bracket -VW 387- with dial gauge to bolt connection between rear cross member and rear final drive, as shown in illustration.
- Apply dial gauge to machined surface of flange for propshaft -arrow-.
- Set dial gauge to “0” with a preload of 1 mm.
- Rotate the differential by turning the two rear wheels (right and left-hand flange shafts) simultaneously in one direction until flange for propshaft has undergone one complete revolution.
- Mark the point of maximum radial run-out (corresponding to the maximum distance from the axis of rotation) with coloured dot on exterior of flange for propshaft.
- Remove old marking from flange for propshaft.

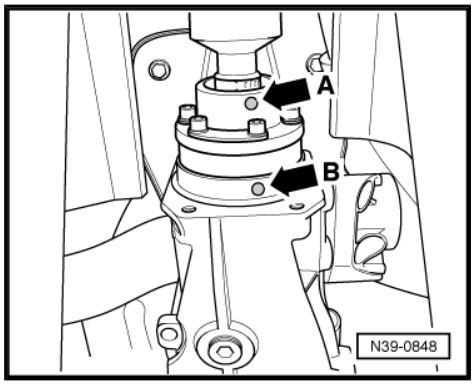

- When installing propshaft, marking on constant velocity joint -arrow A- must be aligned with marking on flange for propshaft -arrow B-.
- Secure propshaft to rear final drive ⇒ page 186 .

2.3 Removing and installing rear final drive

Special tools and workshop equipment required

♦ Engine and gearbox jack -V.A.G 1383 A-

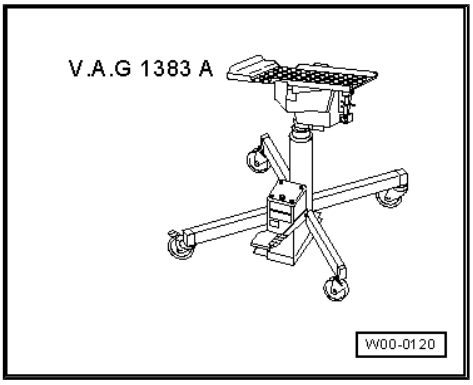

Removing

Caution

Contact corrosion! Notes ⇒ page 16 .

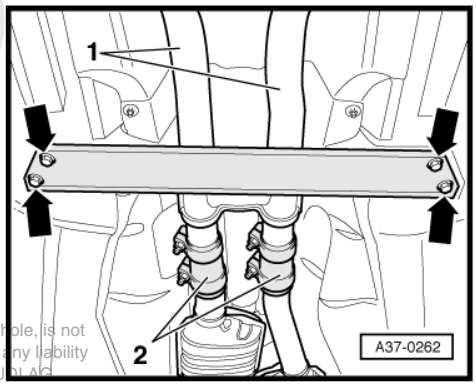

– If fitted, remove cross member -arrows-.
– Loosen clamps -2-.
– Detach rear section of exhaust system -1- and remove.

Reproduction of this document or parts thereof in any form or by any means, in part or in whole, is not permitted unless authorised by AUDI AG. AUDI AG does not guarantee or accept any liability with respect to the correctness of information in this document. Copyright by AUDI AG

Note

Illustration shows vehicle with 6-cylinder petrol engine.

– Check whether there is a factory marking (coloured dot) on the propshaft. If no factory marking is visible, mark position of constant velocity joint on propshaft -arrow A- in relation to flange for propshaft on rear final drive -arrow B-.
– Unbolt propshaft from rear final drive.

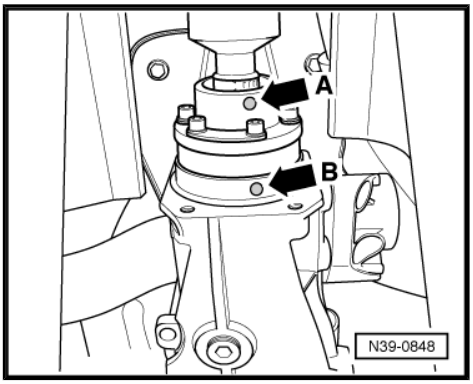

– Support propshaft against heat shield using a wooden wedge -1-.
– Remove heat shield -2- if necessary.

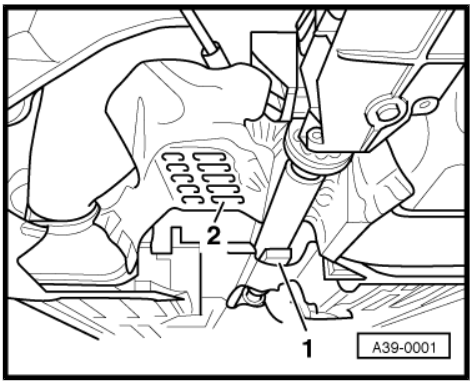

– If fitted, detach retainer for handbrake cable -arrow 1-.

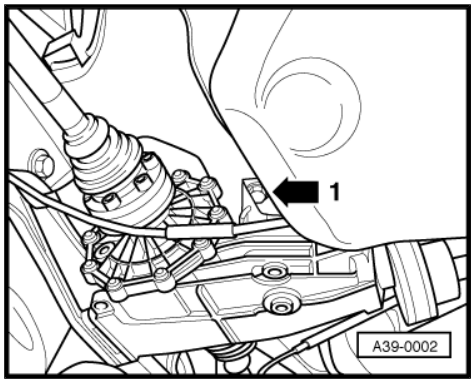

– Unbolt heat shield for left-side drive shaft -arrows-.
– Detach drive shafts from flange shafts of rear final drive ⇒ Rep. Gr. 42 .
– Tie up the drive shafts.

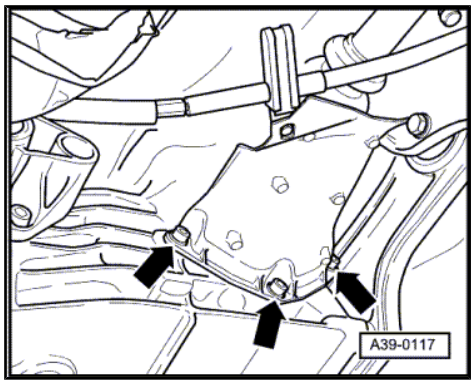

Note

Make sure you do not damage surface coating on drive shafts.

– Place engine and gearbox jack -V.A.G 1383 A- with universal support -V.A.G 1359/2- below rear final drive and take up weight of final drive.
– Secure final drive with a strap.

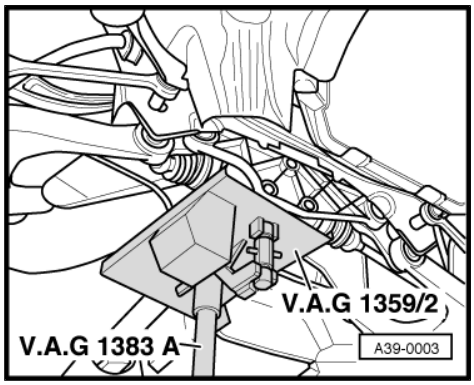

– Remove securing bolts -arrows- of left support for rear final drive.

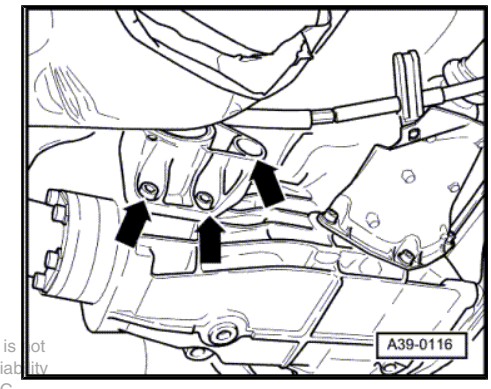

Protected by copyright. Copying for private or commercial purposes, in part or in whole, is not permitted unless authorised by AUDI AG. AUDI AG does not guarantee or accept any liability with respect to the correctness of information in this document. Copyright by AUDI AG.

– Remove bolts -B- and -C- from connection between rear cross member and rear final drive.

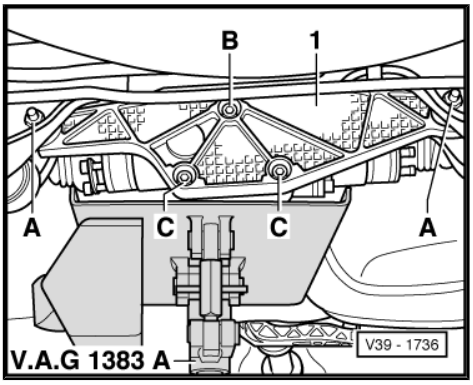

Note

Rear cross member -1- remains in its installation position.

– Slowly lower rear final drive with engine and gearbox jack -V.A.G 1383 A- .

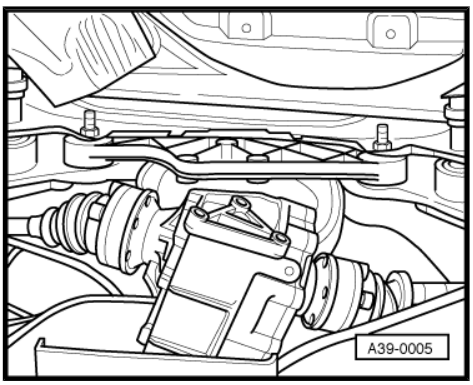

Installing

Installation is carried out in reverse sequence; note the following:

Note

- *Renew self-locking nuts.*
- *Renew propshaft bolts (self-locking).*
- *After detaching the propshaft, it is important to clean out any locking fluid residues from threads of flange for propshaft on rear final drive. Otherwise there is a danger that the new bolts will seize when they are screwed in and then shear off the next time they are removed. The threads can be cleaned with a thread tap.*
- *Renew gasket at flange for propshaft (remove backing and bond self-adhesive side of gasket to flange for propshaft). Bonding surface must be free from grease.*

– Raise rear final drive with engine and gearbox jack -V.A.G 1383 A- until both drive shafts can be connected.

– Tighten bolts of drive shafts slightly.

– Raise final drive and bolt to rear cross member.

– Secure left support to rear final drive.

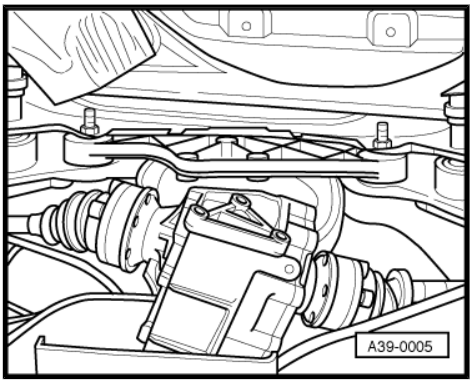

Protected by copyright. Copying for private or commercial purposes, in part or in whole, is not permitted unless authorised by AUDI AG. AUDI AG does not guarantee or accept any liability with respect to the correctness of information in this document. Copyright by AUDI AG.

Note

- *To prevent imbalance, the propshaft and the flange for the propshaft on the rear final drive must be installed so that the factory markings on the constant velocity joint (or the markings made on removal of the propshaft) -arrow A- are in alignment with the markings on the flange for the propshaft on the rear final drive -arrow B-.*
- *After detaching the propshaft from the rear final drive, the additional balancing washer (thicker washer) that may be fitted between the lock plate and one of the bolt heads must not be reinstalled.*

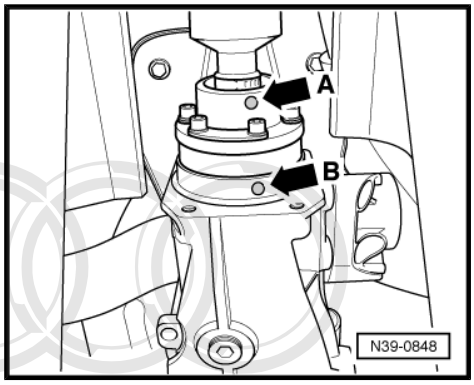

– Secure propshaft to rear final drive ⇒ page 186 .
– Bolt drive shafts to flange shafts of rear final drive ⇒ Rep. Gr. 42 .
– Align exhaust system so it is free of stress ⇒ Rep. Gr. 26 .
– Check gear oil level in rear final drive ⇒ page 105 .

Protected by copyright. Copying for private or commercial purposes, in part or in whole, is not permitted unless authorised by AUDI AG. AUDI AG does not guarantee or accept any liability with respect to the correctness of information in this document. Copyright by AUDI AG.

Tightening torques

Component	Nm
Left support to rear final drive	40
Rear final drive to rear cross member	55
Cross member to body	25
Heat shield for drive shaft (left-side) to rear final drive	25
Retainer for handbrake cable	25

2.4 Securing rear final drive to assembly stand

Special tools and workshop equipment required

- Engine/gearbox support -VW 540-

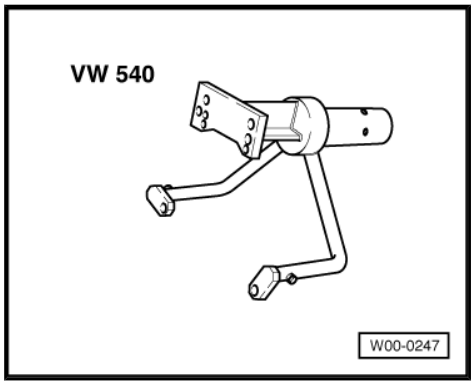

Procedure

– Secure rear final drive to engine and gearbox support - VW 540- .

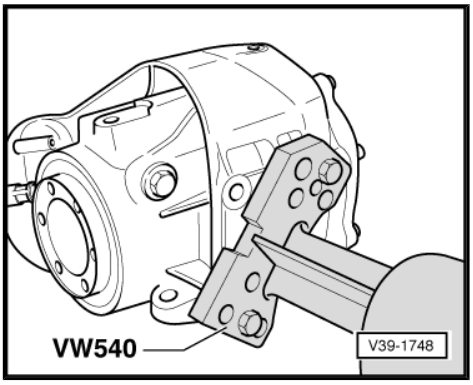

2.5 Renewing oil seals for flange shafts

Special tools and workshop equipment required

♦ Punch -2062-

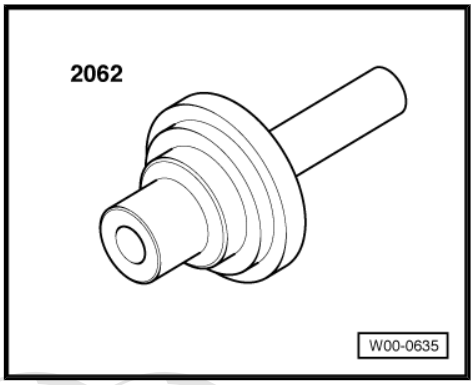

♦ Used oil collection and extraction unit -V.A.G 1782-

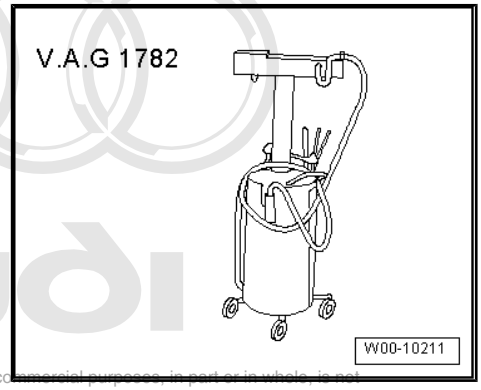

Protected by copyright. Copying for private or commercial purposes, in part or in whole, is not permitted unless authorised by AUDI AG. AUDI AG does not guarantee or accept any liability with respect to the correctness of information in this document. Copyright by AUDI AG.

Procedure

Note

♦ *Repair instructions* ⇒ *page 16* .

♦ *The procedure is identical for left and right oil seals.*

– Remove rear final drive ⇒ page 112 .

– Place drip tray of used oil collection and extraction unit -V.A.G 1782- underneath.
– Remove bolt securing flange shaft. To do so, screw two bolts into flange and counterhold flange shaft with suitable lever.
– Pull out flange shaft using the bolts already screwed in.
– Pry out oil seal with a suitable lever taking care not to damage seat for oil seal.
– Clean seat for oil seal.

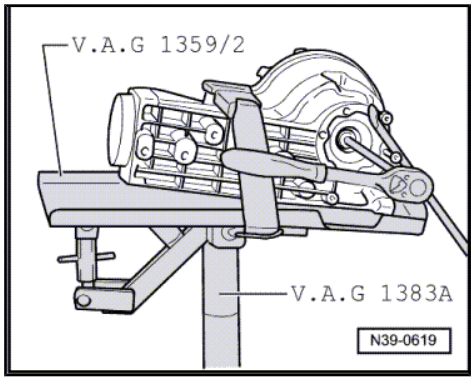

– Lightly lubricate outer circumference of new oil seal with gear oil.
– Pack space between sealing lip and dust lip half-full with sealing grease -G 052 128 A1- .
– Drive in oil seal as far as stop using punch -2062- (keep oil seal straight while installing).
– Install flange shaft and tighten; to do this screw two bolts into the flange and counterhold flange shaft with a suitable lever.
– Install rear final drive ⇒ page 112 .
– Fill up gear oil in rear final drive and check oil level ⇒ page 105 .

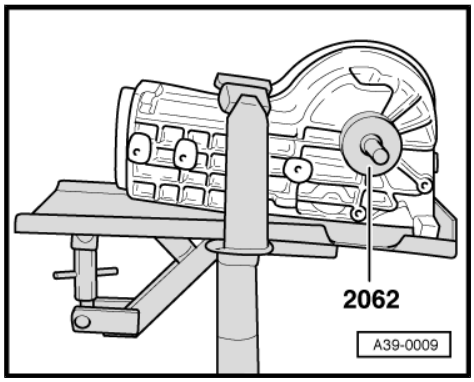

Tightening torque

Component	Nm
Flange shaft to final drive	25

Protected by copyright. Copying for private or commercial purposes, in part or in whole, is not permitted unless authorised by AUDI AG. AUDI AG does not guarantee or accept any liability with respect to the correctness of information in this document. Copyright by AUDI AG.

3 Dismantling and assembling rear final drive

3.1 Rear final drive - overview of components

1 - Final drive housing

2 - Spacer sleeve

- ❑ Renew

3 - Flange for propshaft

- ❑ Removing and installing ⇒ page 131

4 - Pinion shaft

- ❑ Is mated with crown wheel, always renew together as a set
- ❑ Removing and installing ⇒ page 131

5 - Cover for final drive

6 - Differential

- ❑ Must be removed before taking out pinion shaft
- ❑ Removing and installing ⇒ page 122
- ❑ Dismantling and assembling ⇒ page 123

7 - Crown wheel

- ❑ Is mated with pinion shaft (final drive gear set), always renew together as a set
- ❑ Removing and installing ⇒ page 123

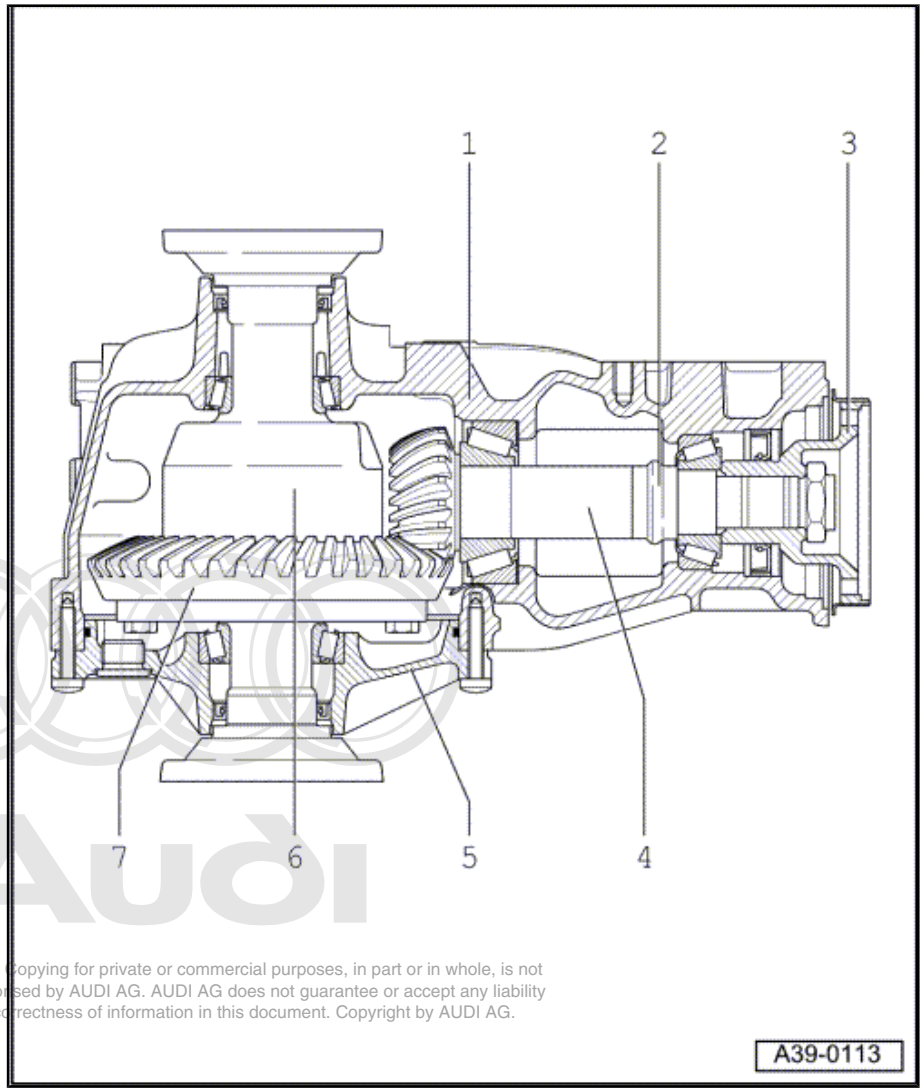

Protected by copyright. Copying for private or commercial purposes, in part or in whole, is not permitted unless authorised by AUDI AG. AUDI AG does not guarantee or accept any liability with respect to the correctness of information in this document. Copyright by AUDI AG.

3.2 Differential - exploded view of components

Note

- *General repair instructions ⇒ page 16 .*
- *Adjustment work is required when renewing the parts marked with 1) ⇒ page 142 .*

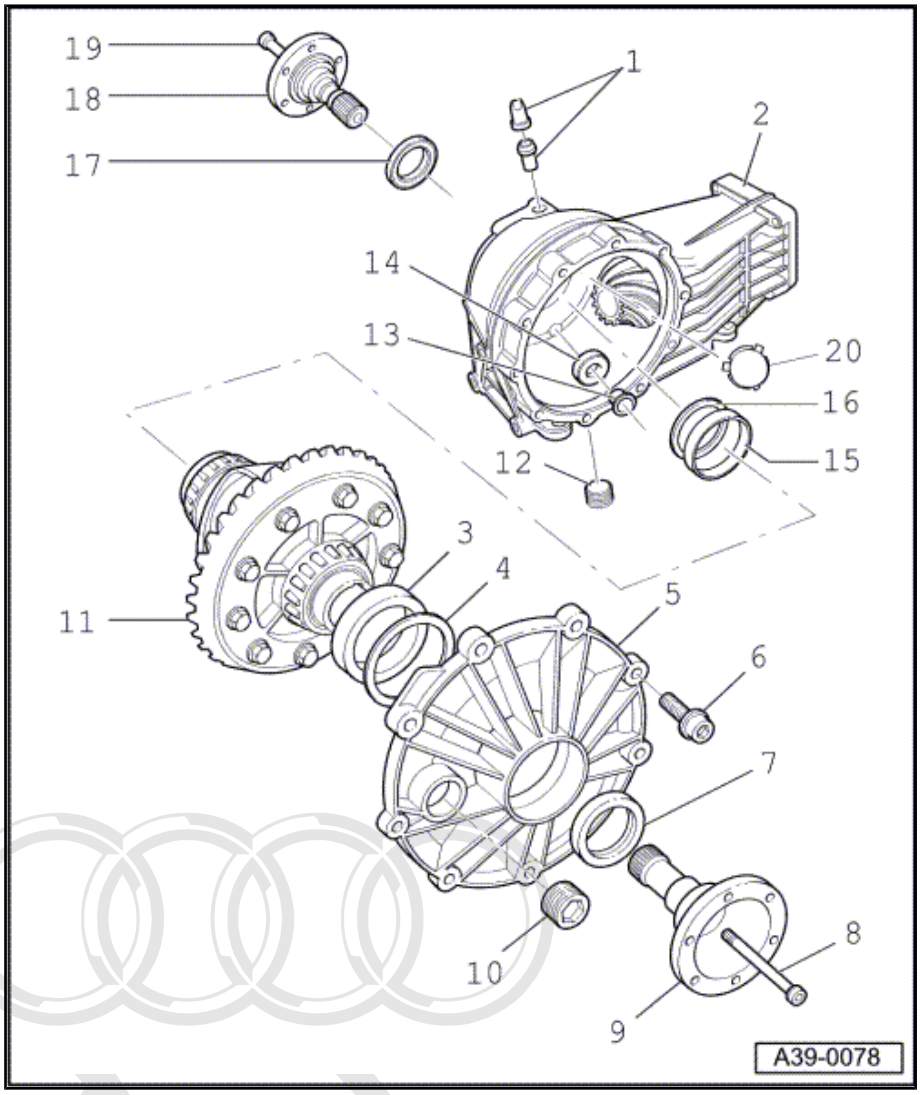

1 - Breather sleeve
- ❑ With rubber valve
- ❑ Installation position ⇒ page 121

2 - Final drive housing 1)
- ❑ With pinion shaft
- ❑ Removing and installing pinion shaft ⇒ page 131

3 - Outer race for large tapered roller bearing 1)
- ❑ Driving out ⇒ page 129
- ❑ Pressing in ⇒ page 129

4 - Shim "S1"
- ❑ Note thickness
- ❑ Table of adjustments ⇒ page 142

5 - Cover for final drive 1)
- ❑ With O-ring
- ❑ Renew O-ring
- ❑ Lubricate O-ring with oil when installing

6 - Torx bolt, 25 Nm
- ❑ Tighten diagonally

7 - Oil seal for flange shaft (right-side)
- ❑ Renewing ⇒ page 117

8 - Hexagon socket head bolt, 25 Nm

9 - Flange shaft (right-side)
- ❑ Removing and installing ⇒ page 121

10 - Oil filler plug, 35 Nm
- ❑ Checking gear oil in rear final drive ⇒ page 105

11 - Differential with crown wheel 1)
- ❑ Dismantling and assembling ⇒ page 123

12 - Oil drain plug, 35 Nm

13 - Bush
- ❑ Holds magnet in position
- ❑ Drive in onto stop

Protected by copyright. Copying for private or commercial purposes, in part or in whole, is not permitted unless authorised by AUDI AG. AUDI AG does not guarantee or accept any liability with respect to the correctness of information in this document. Copyright by AUDI AG.

14 - Magnet

15 - Outer race for small tapered roller bearing [1)]

- ❑ Removing and installing ⇒ page 123

16 - Shim “S2”

- ❑ Note thickness
- ❑ Table of adjustments ⇒ page 142

17 - Oil seal for flange shaft (left-side)

- ❑ Renewing ⇒ page 117

18 - Flange shaft (left-side)

- ❑ Removing and installing ⇒ page 121

19 - Hexagon socket head bolt, 25 Nm

20 - Cover

- ❑ Installing ⇒ page 121

Protected by copyright. Copying for private or commercial purposes, in part or in whole, is not permitted unless authorised by AUDI AG. AUDI AG does not guarantee or assume any liability with respect to the correctness of information in this document. Copyright by AUDI AG.

Removing and installing flange shaft

– To slacken and tighten bolt securing flange shaft, screw two bolts into flange and counterhold flange shaft with suitable lever.

– Pull out flange shaft using the bolts already screwed in.

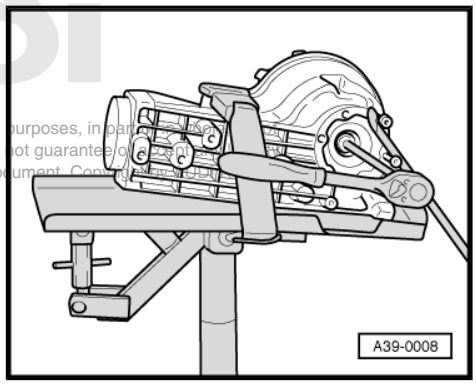

Driving in cover onto stop

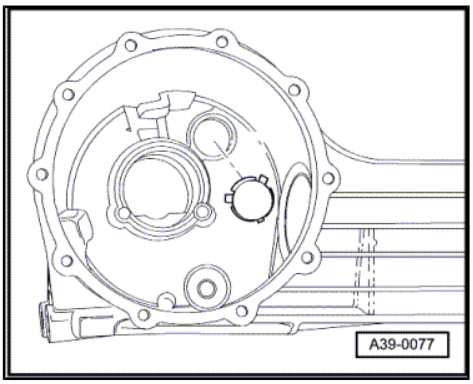

Installation position of breather sleeve

After pressing it in, the breather sleeve must protrude out of the housing.

- Dimension -a- = 13 mm
- Slot in rubber valve must be aligned in direction of travel.

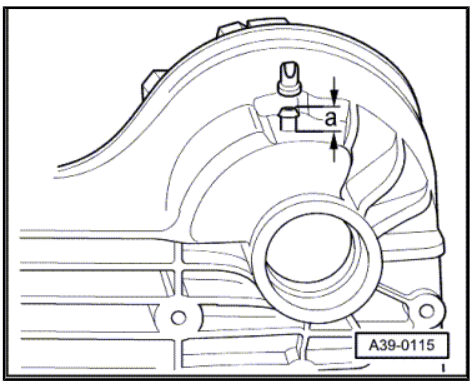

Removing and installing differential

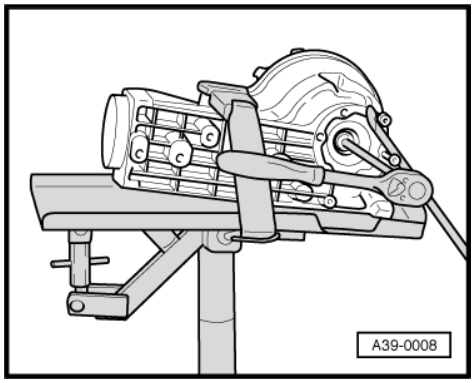

- Rear final drive removed ⇒ page 112 and mounted on assembly stand ⇒ page 116 .
- Gear oil drained off.

Removing:

– Remove bolt securing left and right flange shaft. To do so, screw two bolts into flange and counterhold flange shaft with suitable lever.

– Pull out flange shaft using the bolts already screwed in.

– Mark flange shafts (left and right).

– Remove cover for final drive.

– Remove differential.

Installing:

Installation is carried out in reverse sequence; note the following:

Note

Renew O-ring.

– Lightly lubricate new O-ring for final drive cover with gear oil.

– Fit cover for final drive on final drive housing and tighten bolts in diagonal sequence to 25 Nm.

– Renew oil seals for flange shafts ⇒ page 117 .

Protected by copyright. Copying for private or commercial purposes, in part or in whole, is not permitted unless authorised by AUDI AG. AUDI AG does not guarantee or accept any liability with respect to the correctness of information in this document. Copyright by AUDI AG.

3.3 Dismantling and assembling differential

Special tools and workshop equipment required

- Thrust plate -VW 401-
- Thrust plate -VW 402-
- Press tool -VW 407-
- Press tool -VW 412-
- Drift -VW 295-
- Press tool -VW 408 A-

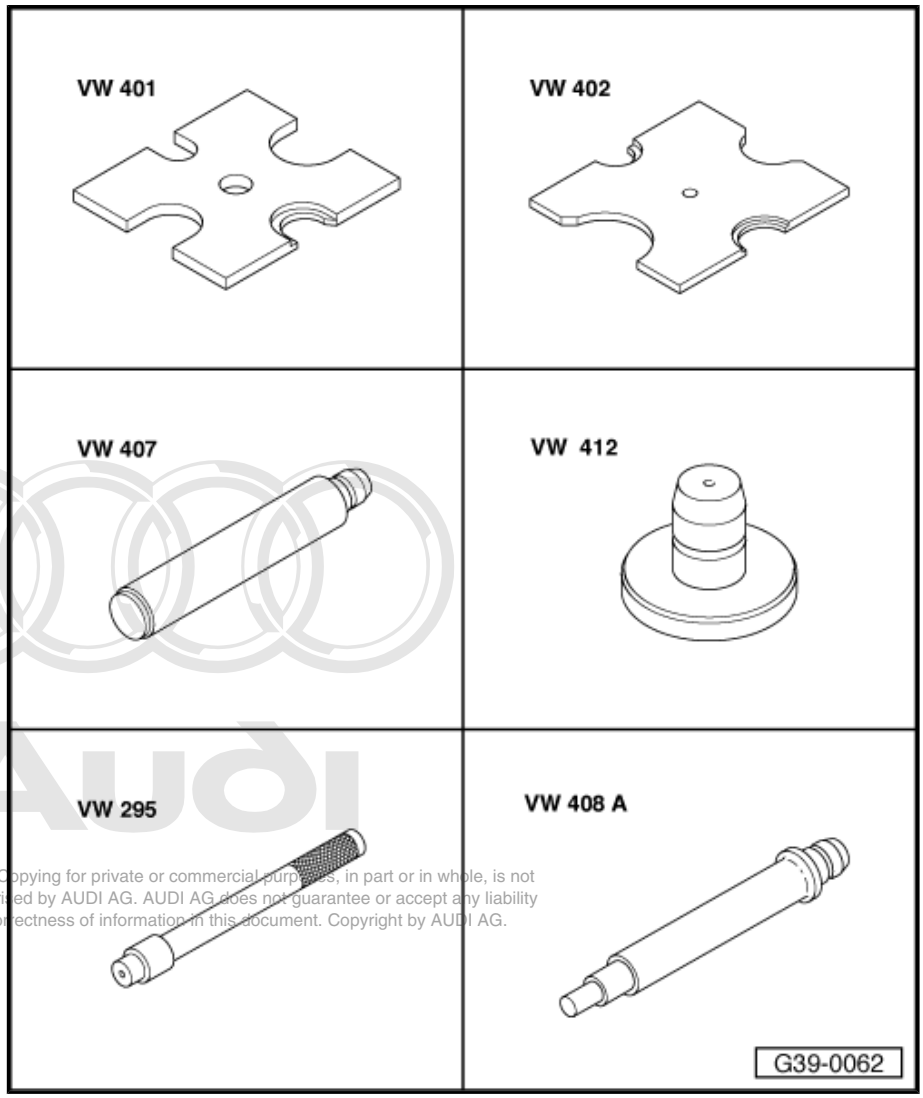

Protected by copyright. Copying for private or commercial purposes, in part or in whole, is not permitted unless authorised by AUDI AG. AUDI AG does not guarantee or accept any liability with respect to the correctness of information in this document. Copyright by AUDI AG.

- Press tool -VW 442-
- Press tool -40-21-
- Thrust plate -40-105-
- Press tool -2050-
- Drift -3138-
- Two-arm puller -Kukko 44/2-

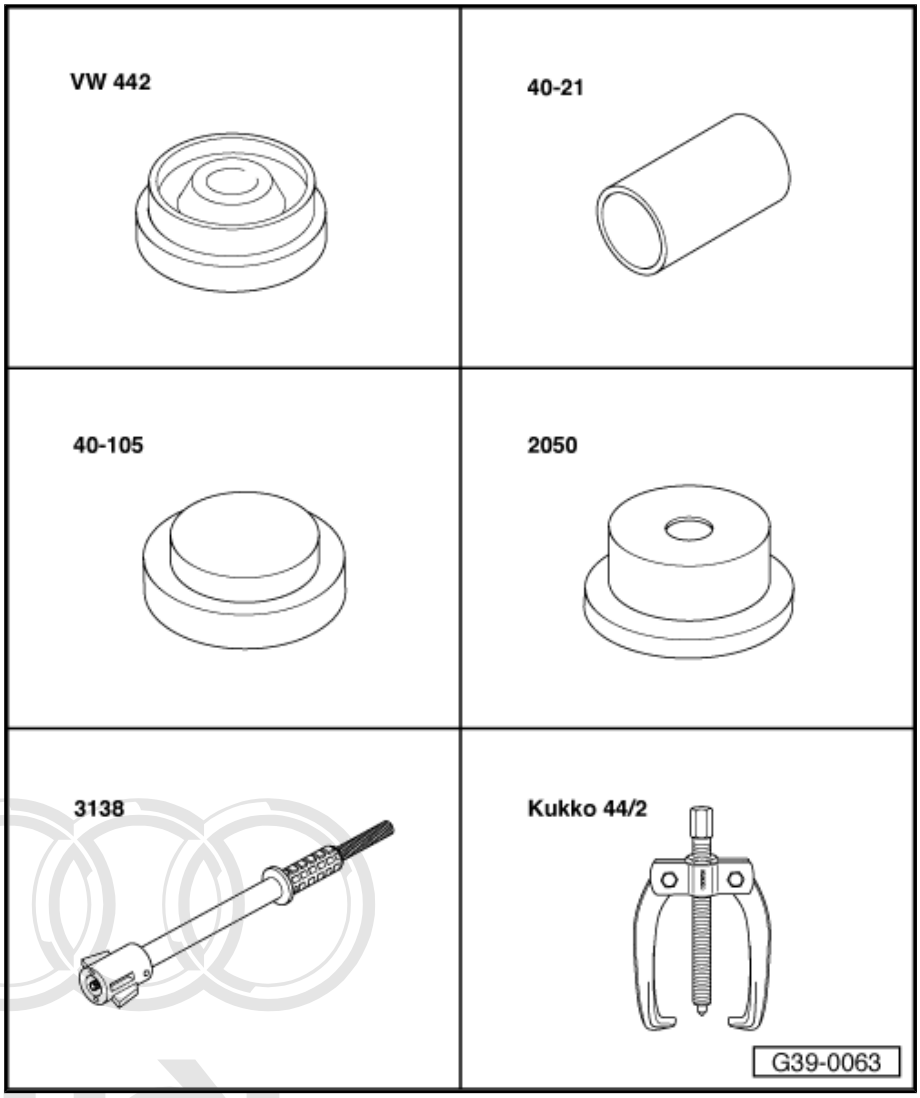

- Tapered roller bearing puller -V.A.G 1582-

Protected by copyright. Copying for private or commercial purposes, in part or in whole, is not permitted unless authorised by AUDI AG. AUDI AG does not guarantee or accept any liability with respect to the correctness of information in this document. Copyright by AUDI AG.

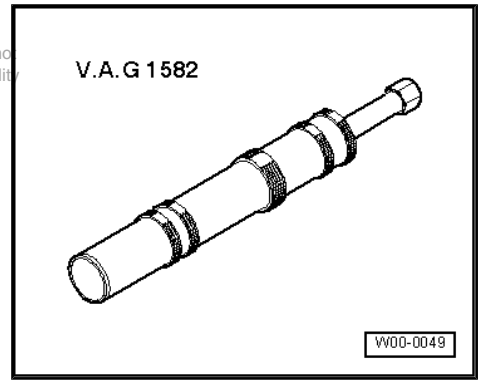

- Adapter -V.A.G 1582/6A-

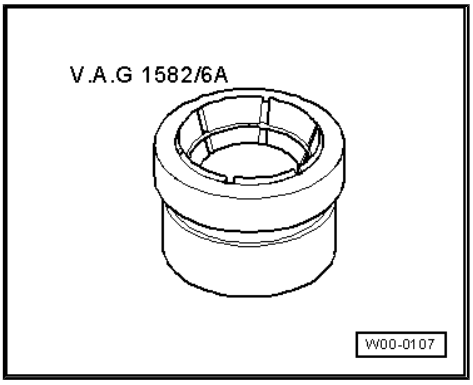

Note

- *General repair instructions ⇒ page 16 .*
- *Secure rear final drive to assembly stand ⇒ Page ⇒ page 116 .*
- *Renew both tapered roller bearings for the differential together. Use new bearings from a single manufacturer wherever possible.*
- *Adjustment work is required when renewing the parts marked with 1) ⇒ page 142 .*

Exploded view of components

Protected by copyright. Copying for private or commercial purposes, in part or in whole, is not permitted unless authorised by AUDI AG. AUDI AG does not guarantee or accept any liability with respect to the correctness of information in this document. Copyright by AUDI AG.

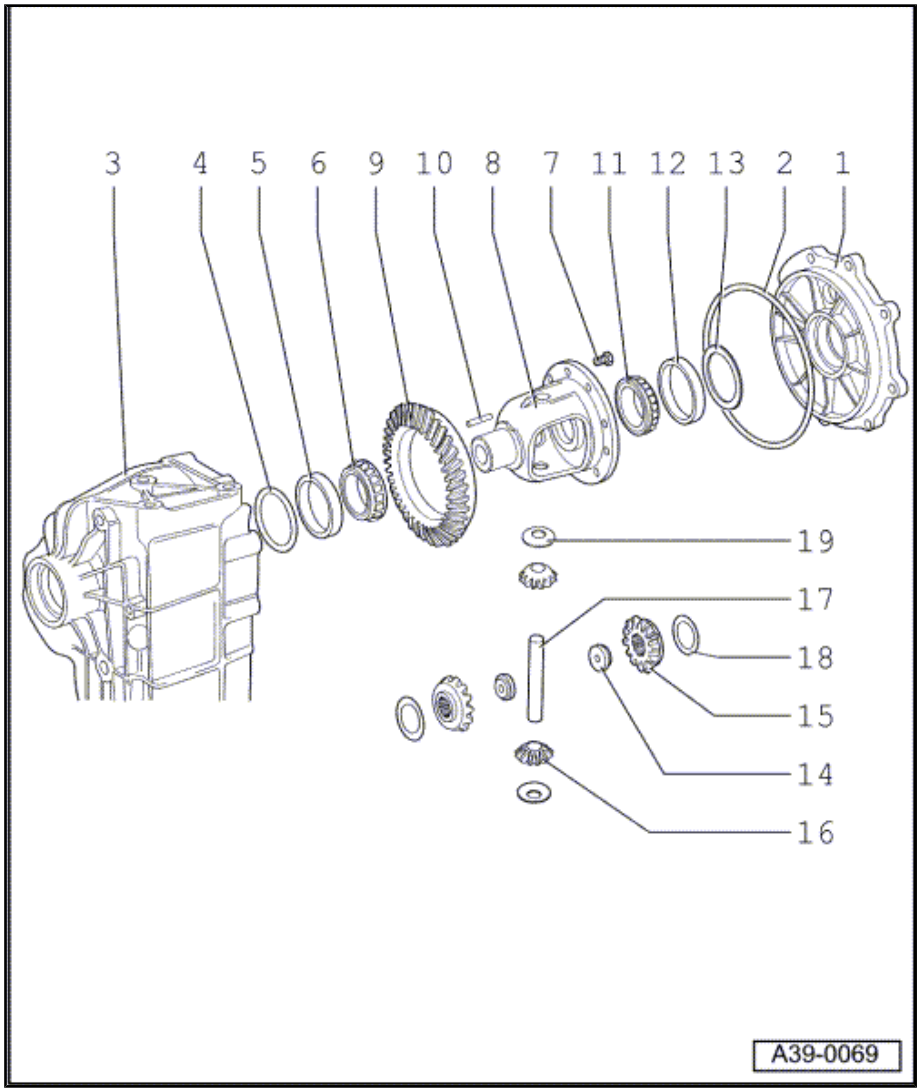

1 - Cover for final drive [1)]

2 - O-ring
- ❑ Renew
- ❑ Lubricate with gear oil when installing

3 - Final drive housing [1)]

4 - Shim "S2"
- ❑ Note thickness
- ❑ Table of adjustments ⇒ page 142

5 - Outer race for small tapered roller bearing [1)]
- ❑ Driving out ⇒ page 127
- ❑ Pressing in ⇒ page 127

6 - Inner race for small tapered roller bearing [1)]
- ❑ Pulling off ⇒ page 128
- ❑ Pressing on ⇒ page 128

7 - Bolt -60 Nm- + tighten +45° ($^1/_8$ turn) further
- ❑ Renew
- ❑ For correct version, refer to ⇒ Electronic parts catalogue
- ❑ Tighten until all bolts make contact, then tighten diagonally to correct torque.

8 - Differential cage[1)]

9 - Crown wheel[1)]
- ❑ Is paired with pinion shaft (final drive set)
- ❑ Select correct version according to gearbox code letters ⇒ Electronic parts catalogue
- ❑ Driving crown wheel off differential cage with a drift ⇒ page 129
- ❑ Fitting onto differential cage ⇒ page 130

10 - Spring pin
- ❑ For securing differential pinion pin
- ❑ Drive in flush

11 - Inner race for large tapered roller bearing [1)]
- ❑ Pulling off ⇒ page 128
- ❑ Pressing on ⇒ page 129

12 - Outer race for large tapered roller bearing [1)]
- ❑ Driving out ⇒ page 129
- ❑ Pressing in ⇒ page 129

13 - Shim "S1"
- ❑ Note thickness
- ❑ Table of adjustments ⇒ page 142

Protected by copyright. Copying for private or commercial purposes, in part or in whole, is not permitted unless authorised by AUDI AG. AUDI AG does not guarantee or accept any liability with respect to the correctness of information in this document. Copyright by AUDI AG.

14 - Threaded piece

15 - Sun wheel

- ❑ Installing ⇒ page 130
- ❑ Adjusting ⇒ page 130

16 - Planet pinion

- ❑ Installing ⇒ page 130

17 - Differential pinion pin

- ❑ Drive out with drift
- ❑ Drive in carefully to prevent damage to thrust washers
- ❑ Secure with spring pin ⇒ Item 10 (page 126)

18 - Shim

- ❑ Re-determining thickness ⇒ page 130

19 - Thrust washer

- ❑ Check for cracks

Protected by copyright. Copying for private or commercial purposes, in part or in whole, is not permitted unless authorised by AUDI AG. AUDI AG does not guarantee or accept any liability with respect to the correctness of information in this document. Copyright by AUDI AG.

Driving outer race for small tapered roller bearing out of final drive housing

– After removing check shims for damage.

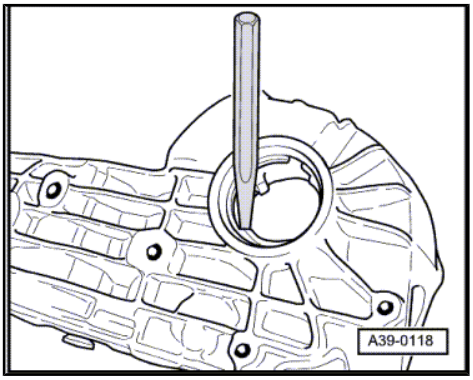

Pressing outer race for small tapered roller bearing into final drive housing as far as stop

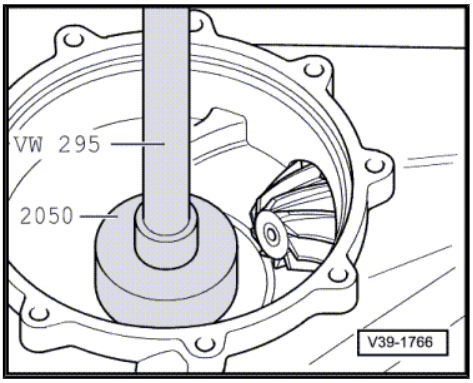

Pulling off inner race for small tapered roller bearing

A - Two-arm puller -Kukko 44/2-

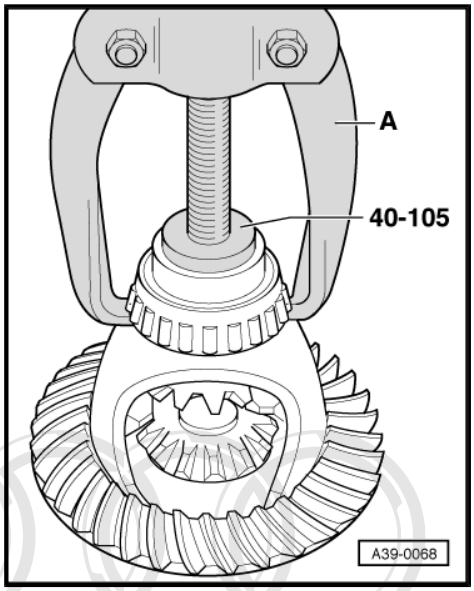

Pressing on inner race for small tapered roller bearing

> ⚠ WARNING
>
> *Wear protective gloves.*

– Heat inner race to approx. 100 °C, fit in position and press home.

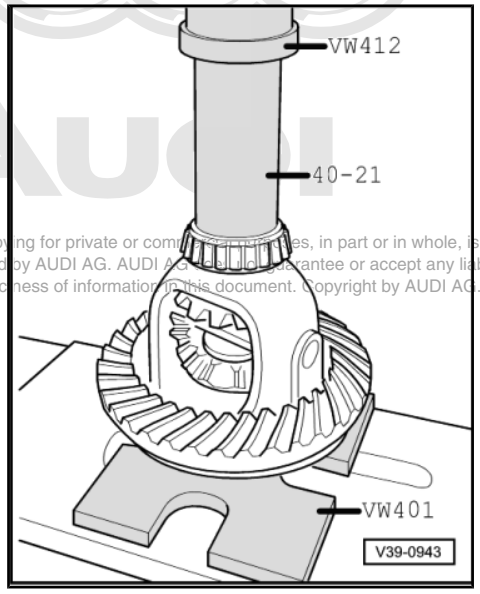

Copyright. Copying for private or commercial purposes, in part or in whole, is not permitted unless authorised by AUDI AG. AUDI AG does not guarantee or accept any liability with respect to the correctness of information in this document. Copyright by AUDI AG.

Pulling off inner race for large tapered roller bearing

– Position thrust plate -40-105- before applying puller.

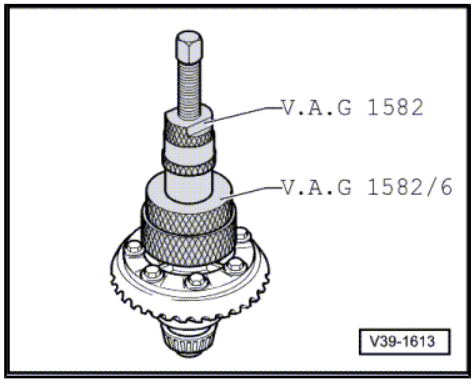

Pressing on inner race for large tapered roller bearing

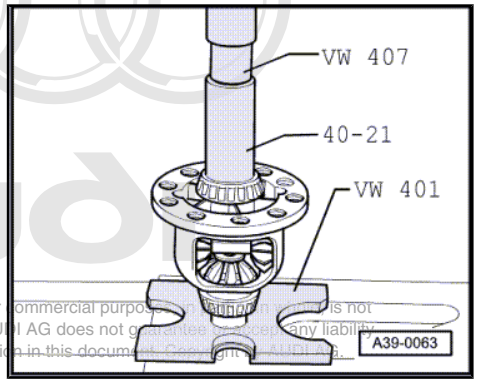

> ⚠ **WARNING**
>
> *Wear protective gloves.*

– Heat inner race to approx. 100 °C, fit in position and press home.

Protected by copyright. Copying for private or commercial purposes, in part or in whole, is not permitted unless authorised by AUDI AG. AUDI AG does not guarantee or assume any liability with respect to the correctness of information in this document. Copyright by AUDI AG.

Driving outer race for large tapered roller bearing out of final drive cover

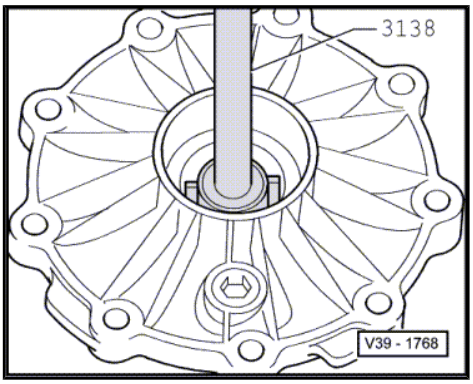

– After removing check shims for damage.

Pressing outer race for large tapered roller bearing into final drive cover

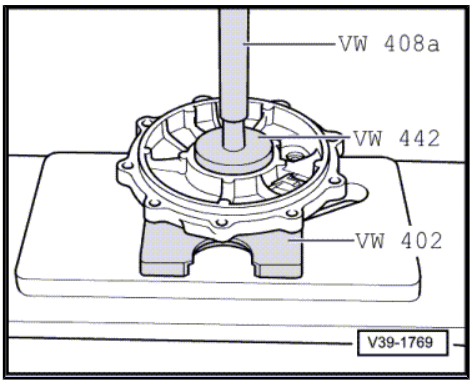

Driving crown wheel off differential cage

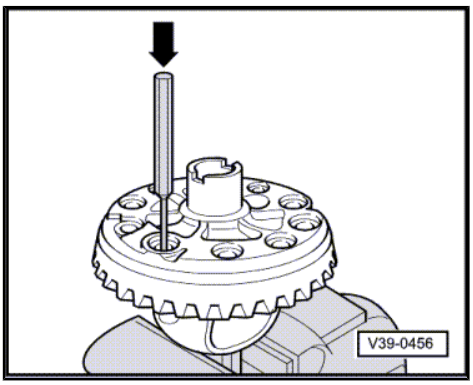

Fitting crown wheel onto differential cage

– Use 2 centring pins -A- (local manufacture) as a guide.

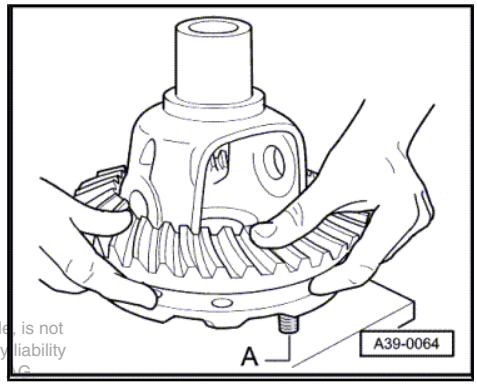

> ⚠ **WARNING**
>
> *Wear protective gloves.*

– Heat crown wheel to approx. 100°C and install.

Protected by copyright. Copying for private or commercial purposes, in part or in whole, is not permitted unless authorised by AUDI AG. AUDI AG does not guarantee or accept any liability with respect to the correctness of information in this document. Copyright by AUDI AG.

Installing differential bevel gears

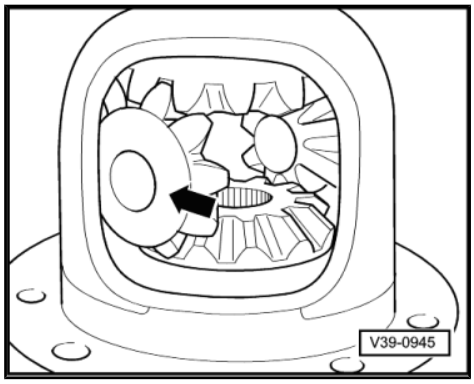

– If the sun wheels have been renewed, measure and select new shims ⇒ page 130 .
– Insert sun wheels with the measured shims.
– Insert planet pinions offset 180° and rotate into position -arrow-.
– Fit and align thrust washers.
– Insert threaded pieces.
– Drive differential pinion pin into final position and secure.

Adjusting differential bevel gears

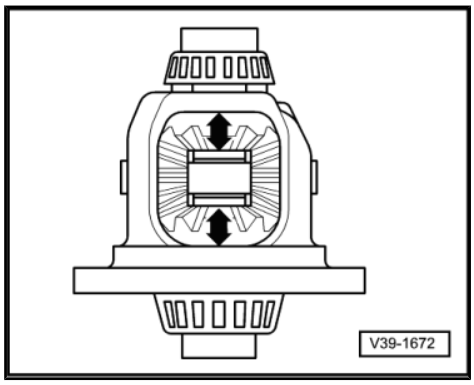

– Insert sun wheels with thinnest shims (0.5 mm).
– Insert planet pinions with thrust washers spaced 180° apart.

> ℹ **Note**
>
> *Ensure that bevel gears and thrust washers are not interchanged from this point onwards.*

– Drive in differential pinion pin.
– Press planet pinions outwards.
– Press sun wheels in direction of -arrows- and check the amount of play.
– Determine the thickest shim that can still just be fitted for the sun wheels on each side.
– Select shims of equal thickness.
– Select thickness of required shim(s) from following table:

Available shims - Thickness of shims in mm [1]		
0.50	0.70	0.90
0.60	0.80	1.00

• [1] For Part Nos. refer to ⇒ Electronic parts catalogue

Note

The adjustment is also correct if no further play is perceptible, although it is still just possible to rotate the differential bevel gears -arrow-.

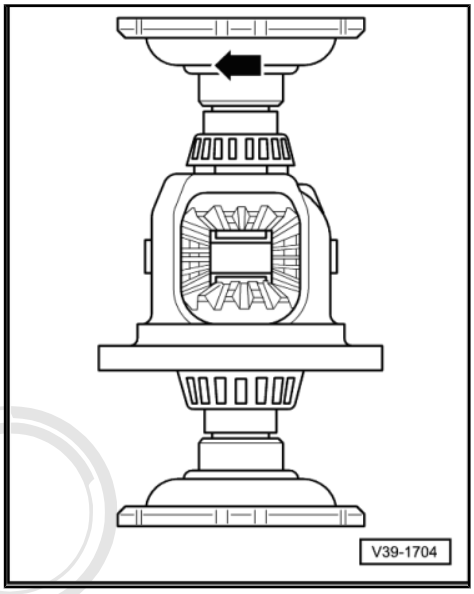

3.4 Removing and installing pinion shaft; dismantling and assembling pinion shaft

Special tools and workshop equipment required

- Drive flange installing tool -VW 391-
- Thrust plate -VW 401-
- Thrust plate -VW 402-
- Press tool -VW 407-
- Press tool -VW 408 A-
- Press tool -VW 412-

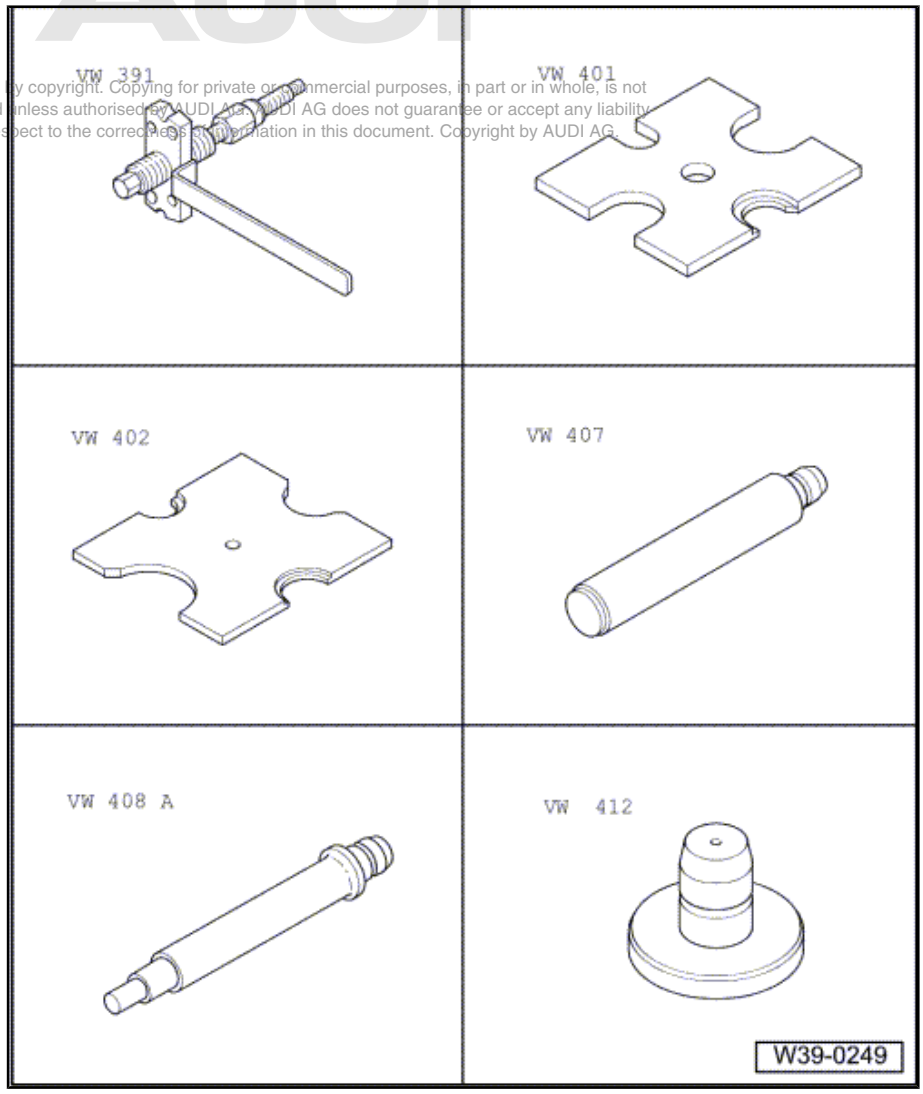

Protected by copyright. Copying for private or commercial purposes, in part or in whole, is not permitted unless authorised by AUDI AG. AUDI AG does not guarantee or accept any liability with respect to the correctness of information in this document. Copyright by AUDI AG.

- Support rails -VW 457-
- Drift -VW 460/2-
- Thrust pieces for pinion shaft bearing -VW 470-
- Tube -VW 519-
- Engine/gearbox support -VW 540-
- Thrust plate -30-205-

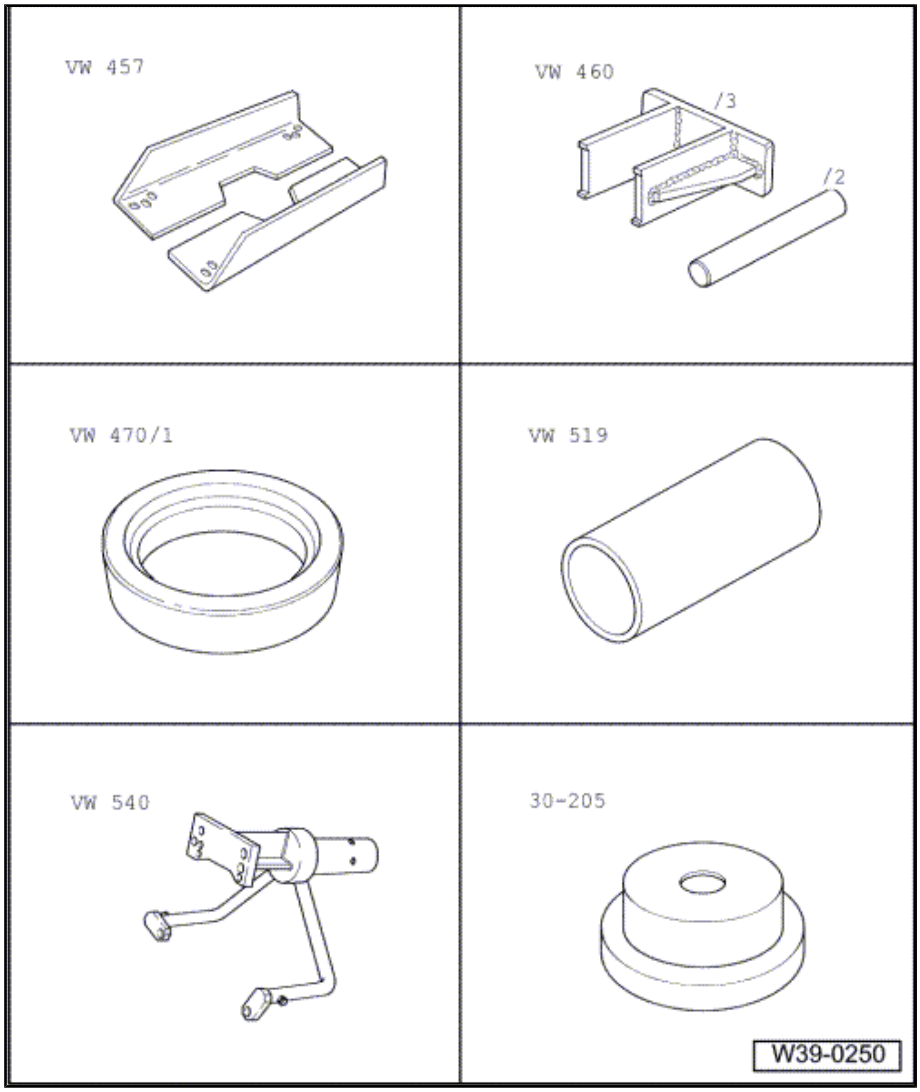

Protected by copyright. Copying for private or commercial purposes, in part or in whole, is not permitted unless authorised by AUDI AG. AUDI AG does not guarantee or accept any liability with respect to the correctness of information in this document. Copyright by AUDI AG.

- Installing ring -2003/3-
- Thrust plate -3005-
- Counterhold tool -3028-
- Thrust pad -3062-
- Drift -3138-
- Drift sleeve -3143-

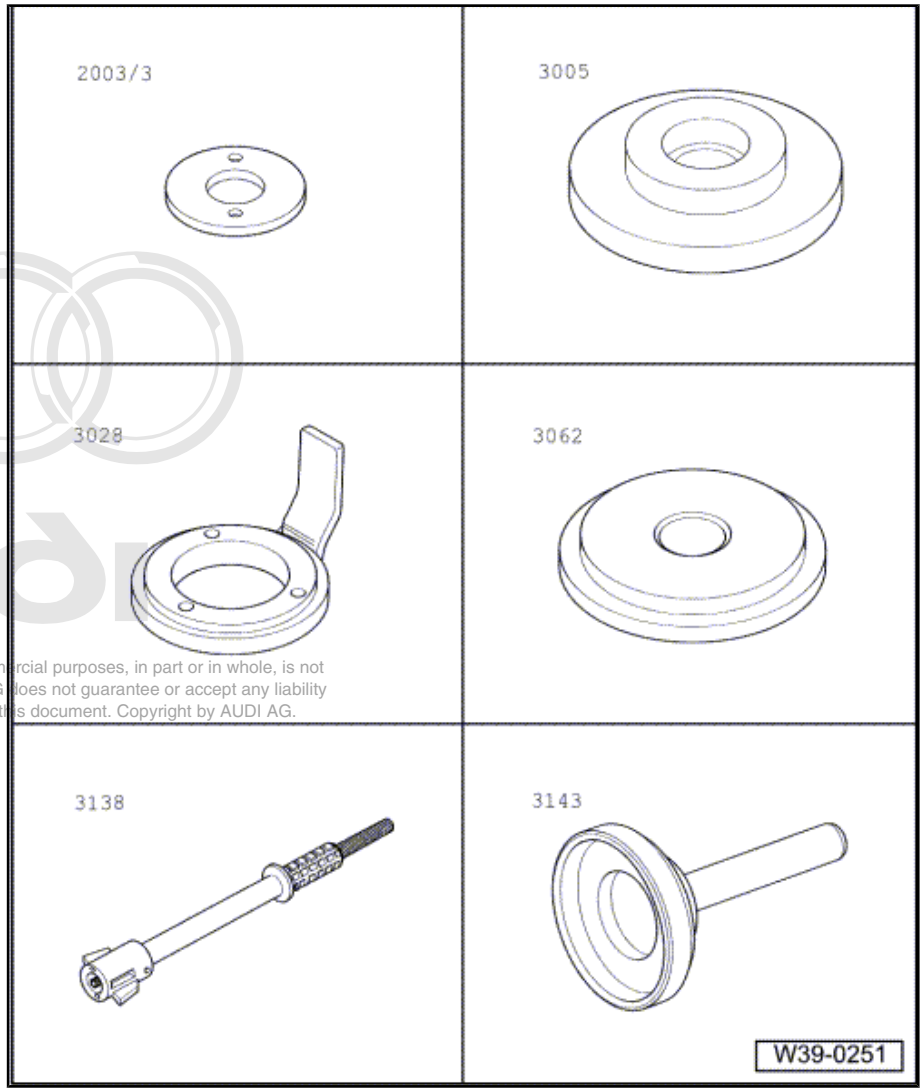

Protected by copyright. Copying for private or commercial purposes, in part or in whole, is not permitted unless authorised by AUDI AG. AUDI AG does not guarantee or accept any liability with respect to the correctness of information in this document. Copyright by AUDI AG.

- Multi-purpose tool -VW 771-
- Punch -3026-
- Assembly tool -3253-
- Engine and gearbox jack -V.A.G 1383 A-

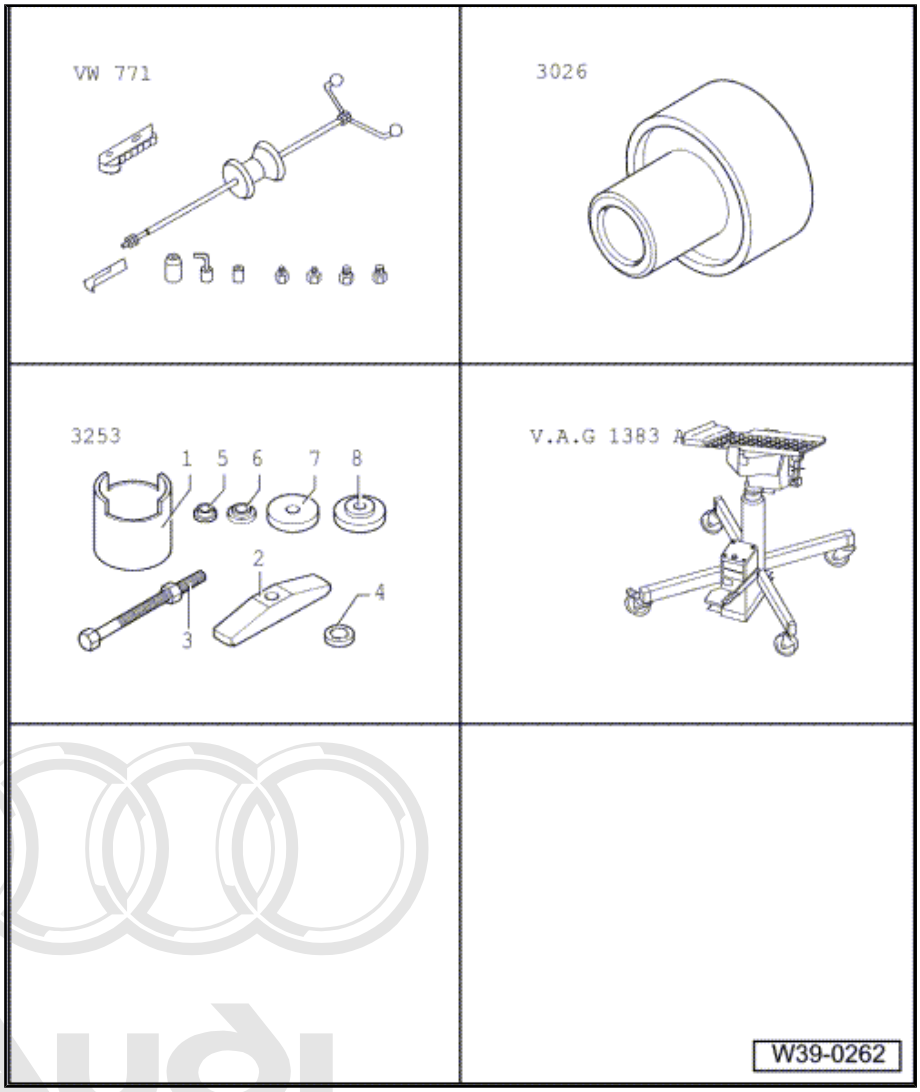

Protected by copyright. Copying for private or commercial purposes, in part or in whole, is not permitted unless authorised by AUDI AG. AUDI AG does not guarantee or accept any liability with respect to the correctness of information in this document. Copyright by AUDI AG.

- -1- Internal puller -Kukko 21/7-

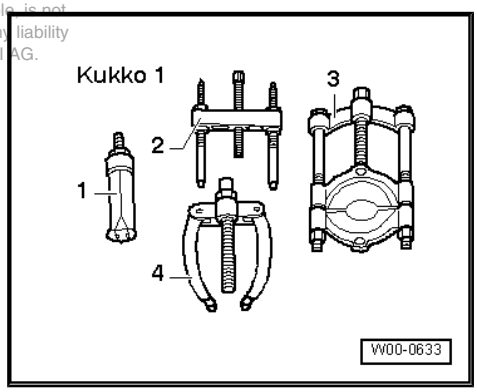

- -3- Splitter -Kukko 17/2-
- -4- Counter-support -Kukko 22/2-
- Torque gauge 0 ... 600 Ncm, commercially available
- Socket attachment (long), 36 mm

Note

- *General repair instructions ⇒ page 16 .*
- *Secure rear final drive to assembly stand ⇒ Page ⇒ page 116 .*
- *Renew both tapered roller bearings for the differential together. Use new bearings from a single manufacturer wherever possible.*
- *Adjustment work is required when renewing the parts marked with [1] ⇒ page 142 .*

Protected by copyright. Copying for private or commercial purposes, in part or in whole, is not permitted unless authorised by AUDI AG. AUDI AG does not guarantee or accept any liability with respect to the correctness of information in this document. Copyright by AUDI AG.

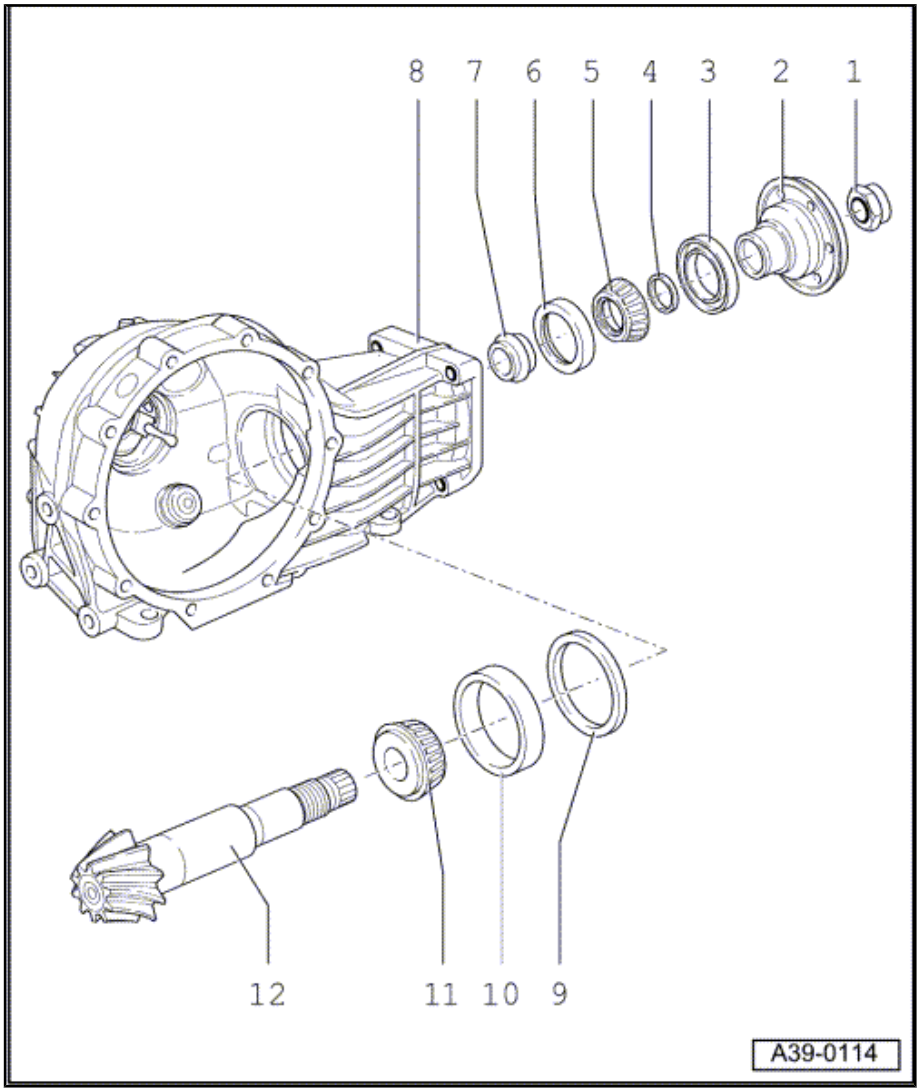

1 - Nut
- ❑ Removing ⇒ page 136
- ❑ Tightening ⇒ page 139
- ❑ Measuring friction torque ⇒ page 140
- ❑ Securing ⇒ page 140

2 - Flange for propshaft
- ❑ Pulling off ⇒ page 136
- ❑ Installing ⇒ page 139

3 - Oil seal
- ❑ Pulling out ⇒ page 136
- ❑ Driving in ⇒ page 139

4 - O-ring
- ❑ Renew
- ❑ Lubricate with gear oil when installing ⇒ page 139

5 - Inner race for small tapered roller bearing [1]
- ❑ Pressing out pinion shaft ⇒ page 137
- ❑ Pressing on ⇒ page 138
- ❑ Low-friction bearing; do not oil bearing when measuring friction torque

6 - Outer race for small tapered roller bearing [1]
- ❑ Pulling out ⇒ page 137
- ❑ Pressing in ⇒ page 138
- ❑ Low-friction bearing; do not oil bearing when measuring friction torque

7 - Spacer sleeve [1]
- ❑ Renew

8 - Final drive housing [1]

9 - Shim “S3”
- ❑ Note thickness
- ❑ Table of adjustments ⇒ page 142

10 - Outer race for large tapered roller bearing [1]
- ❑ Driving out ⇒ page 137

- ❑ Drawing in ⇒ page 138
- ❑ Low-friction bearing; do not oil bearing when measuring friction torque

11 - Inner race for large tapered roller bearing [1)]

- ❑ Pressing off ⇒ page 137
- ❑ Pressing on ⇒ page 138
- ❑ Low-friction bearing; do not oil bearing when measuring friction torque

12 - Pinion shaft [1)]

- ❑ Is mated with crown wheel, always renew together as a set

Removing nut for pinion shaft

– Secure counterhold tool -3028- using 2 bolts (M8x30) -item A-.

This document is protected by copyright. Copying or distribution in whole or in part, or in whole, is not permitted unless authorised by AUDI AG. AUDI AG does not guarantee or accept any liability with respect to the correctness of information in this document. Copyright by AUDI AG.

B - Socket attachment (long), 36 mm

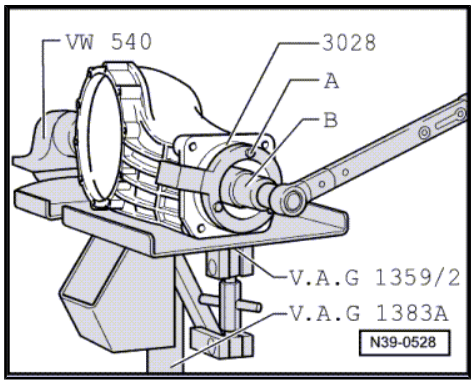

Note

The rear final drive must be supported when loosening the pinion shaft nut (e.g. using universal support -V.A.G 1359/2- in combination with engine and gearbox jack -V.A.G 1383 A-).

Pulling flange for propshaft off pinion shaft

– To pull off, screw two bolts (M8x30) -item A- into flange for propshaft.

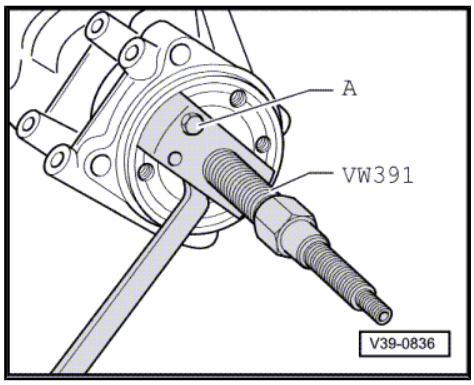

Pulling out oil seal (for flange for propshaft)

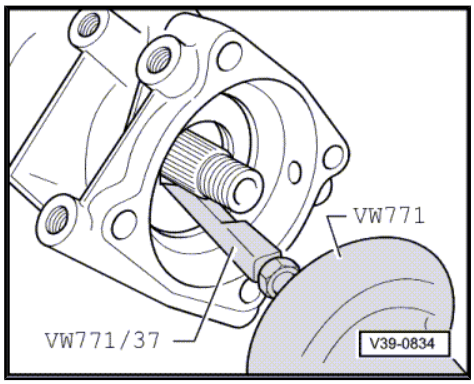

Pressing pinion shaft out of inner race for small tapered roller bearing

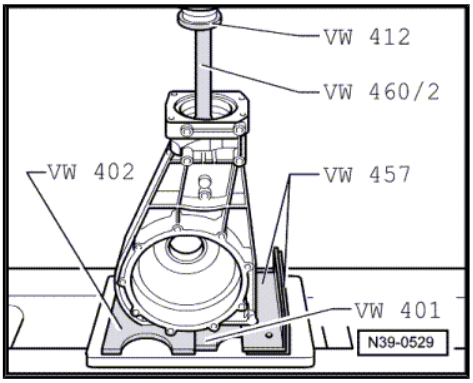

Pulling out outer race for small tapered roller bearing

A - Counter-support -Kukko 22/2-

B - Internal puller 46 ... 58 mm -Kukko 21/7-

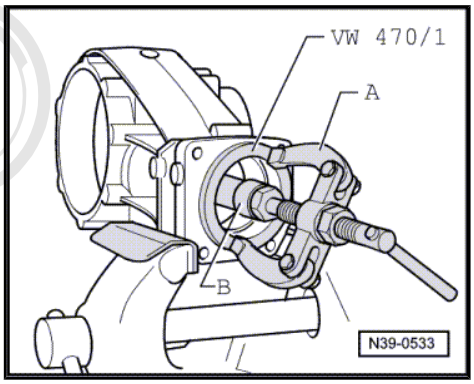

Protected by copyright. Copying for private or commercial purposes, in part or in whole, is not permitted unless authorised by AUDI AG. AUDI AG does not guarantee or accept any liability with respect to the correctness of information in this document. Copyright by AUDI AG.

Driving out outer race for large tapered roller bearing

– After removing check shims for damage.

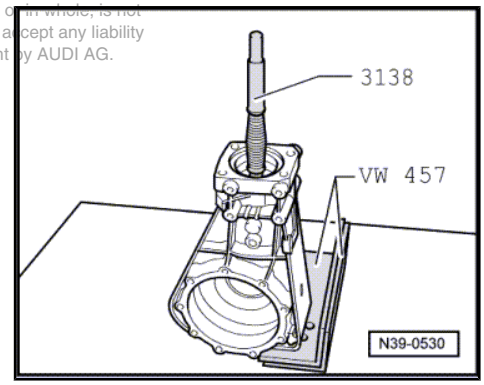

Pressing inner race for large tapered roller bearing off pinion shaft

A - Splitter 22 ... 115 mm -Kukko 17/2-

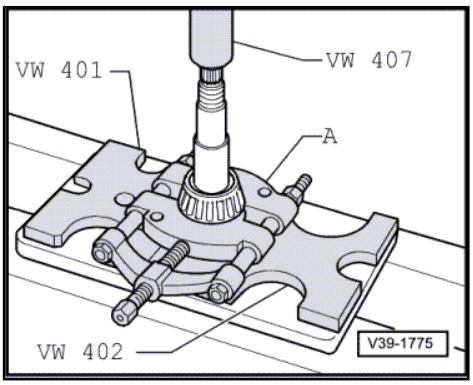

Pressing inner race for large tapered roller bearing onto pinion shaft

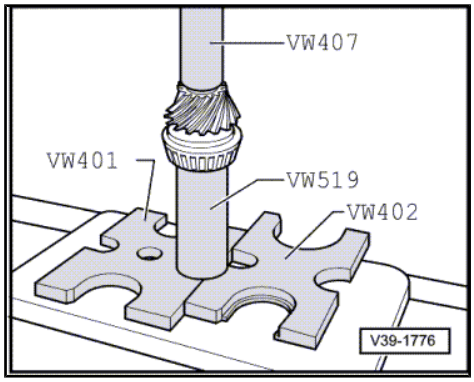

> ⚠ **WARNING**
>
> *Wear protective gloves.*

– Heat inner race to approx. 100 °C, fit in position and press home.

Pulling in outer race for large tapered roller bearing

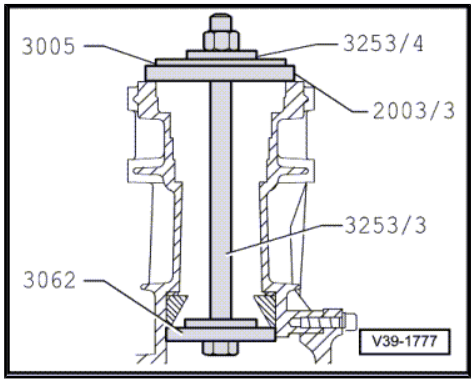

– Lightly oil bearing seat in final drive housing.

– Insert previously determined shim “S3” for pinion shaft ⇒ page 143 .

• Lettering “oben” (top) on thrust plate -3253/4- faces nut of puller.

Pressing in outer race for small tapered roller bearing

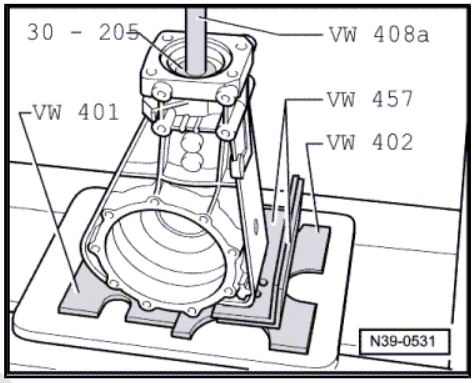

– Lightly oil bearing seat in final drive housing.

• Use press tool -VW 408 A- and thrust plate -30-205- to press in outer race.

Pressing on inner race for small tapered roller bearing

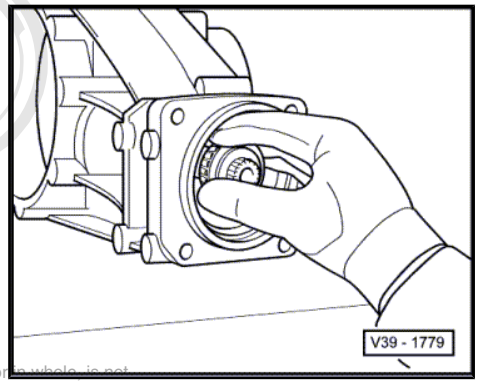

– Insert pinion shaft with new spacer sleeve.

> ⚠ **WARNING**
>
> *Wear protective gloves.*

– Heat inner race for small tapered roller bearing to approx. 100 °C and fit onto pinion shaft.

– Press up pinion shaft and insert bearing using press tool -40-21- up to stop.

Protected by copyright. Copying for private or commercial purposes, in part or in whole, is not permitted unless authorised by AUDI AG. AUDI AG does not guarantee or accept any liability with respect to the correctness of information in this document. Copyright by AUDI AG.

Installing O-ring

– Lightly lubricate new O-ring with gear oil.

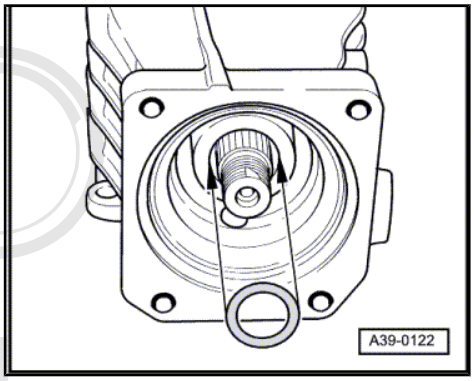

Driving in oil seal (for flange for propshaft)

– Lightly lubricate outer circumference of new oil seal with gear oil.

– Pack space between sealing lip and dust lip half-full with sealing grease -G 052 128 A1- .

– Use punch -3026- to drive home oil seal.

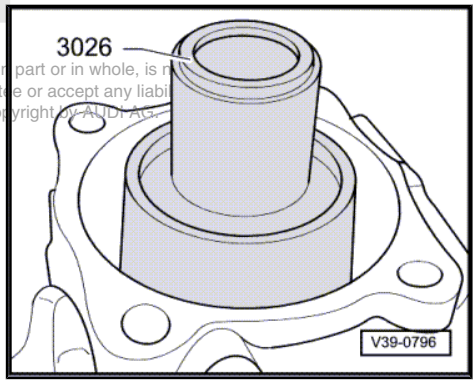

Reproduction or copying of this document, in whole or in part, and its use for other purposes, in part or in whole, is not permitted unless authorised by AUDI AG. AUDI AG does not guarantee or accept any liability with respect to the correctness of information in this document. Copyright by AUDI AG.

Installing flange for propshaft

– Drive flange for propshaft onto pinion shaft until securing nut for pinion shaft can be fitted.

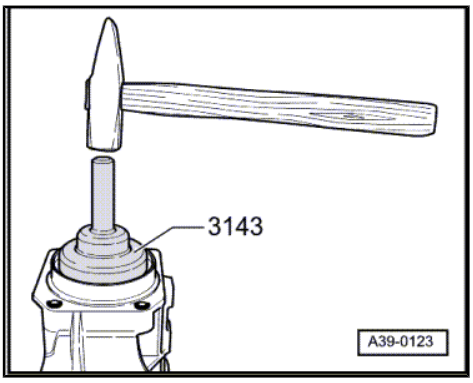

Tightening nut for pinion shaft and setting friction torque

– Secure counterhold tool -3028- using 2 bolts (M8x30) -item A-.

B - Socket attachment (long), 36 mm

– Fit a new pinion shaft nut.

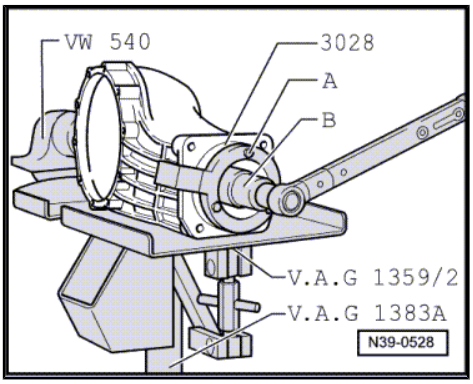

Note

- *The rear final drive must be supported when tightening the pinion shaft nut (e.g. using universal support -V.A.G 1359/2- in combination with engine and gearbox jack -V.A.G 1383 A-).*
- *Only increase tightening torque slowly. Stop and and check friction torque several times. If the specified friction torque is exceeded, the spacer sleeve must be renewed and the adjustment procedure repeated. A spacer sleeve which has been compressed too much cannot be re-used.*

Measuring friction torque

A - Torque gauge 0 ... 600 Ncm

B - Socket attachment, 36 mm

– Set following friction torque:

- New bearings: 200 ... 250 Ncm.
- Used bearings: 30 ... 60 Ncm (used for min. 50 km).

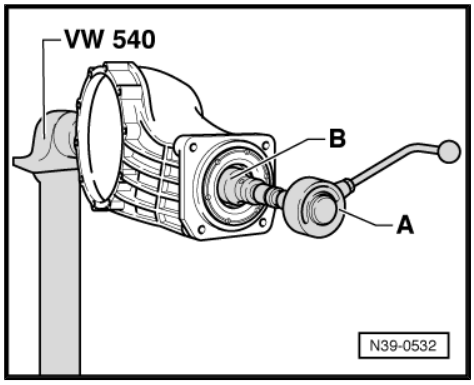

Securing nut for pinion shaft

– Peen pinion shaft nut with a punch.

– After securing the nut for the pinion shaft, measure the radial run-out at the flange for the propshaft, and mark accordingly ⇒ page 111 .

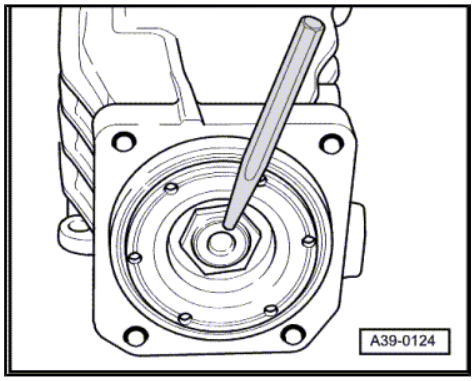

3.5 Adjusting pinion shaft and crown wheel

Note

- *Careful adjustment of the crown wheel and pinion shaft is essential to ensure that the final drive gives long service and runs silently. For this reason, the pinion shaft and crown wheel are matched together during manufacture, and checked to ensure a good mesh pattern and quiet running in both directions of rotation. The position of quietest running is found by moving the pinion shaft in an axial direction and at the same time lifting the crown wheel out of the zero-play mesh position by the amount necessary to maintain the backlash within the specified tolerance.*
- *The object of the adjustment is to reproduce the setting for quietest possible running, as obtained on the test machine in production.*
- *The allowance "r" in relation to the master gauge "Ro" is measured for the final drive sets supplied as replacement parts and marked on the outer circumference of the crown wheel. The final drive set (pinion shaft and crown wheel) may only be renewed together as a matched pair.*
- *Observe the general repair instructions for tapered roller bearings and shims.*
- *For good results, maximum care and cleanliness are very important when performing repairs and taking measurements.*

Protected by copyright. Copying for private or commercial purposes, in part or in whole, is not permitted unless authorised by AUDI AG. Audi AG does not guarantee or accept any liability with respect to the correctness of information in this document. Copyright by AUDI AG.

Adjustment and marking of final drive gear set

1 - Identification “0937” denotes an Oerlikon gear set with a ratio of 37 : 9.

2 - Identification number of matched pair of gears (312).

3 - Allowance “r” is based on the master gauge used on the test machine in production. Allowance “r” is always stated in $^{1}/_{100}$ mm. For example: “25” indicates r = 0.25 mm

Ro - Length of master gauge used on test machine “Ro”.

R - Actual distance between centre axis of crown wheel and face of pinion shaft at point with quietest running for this gear set. R = Ro + r

Vo - Hypoid offset

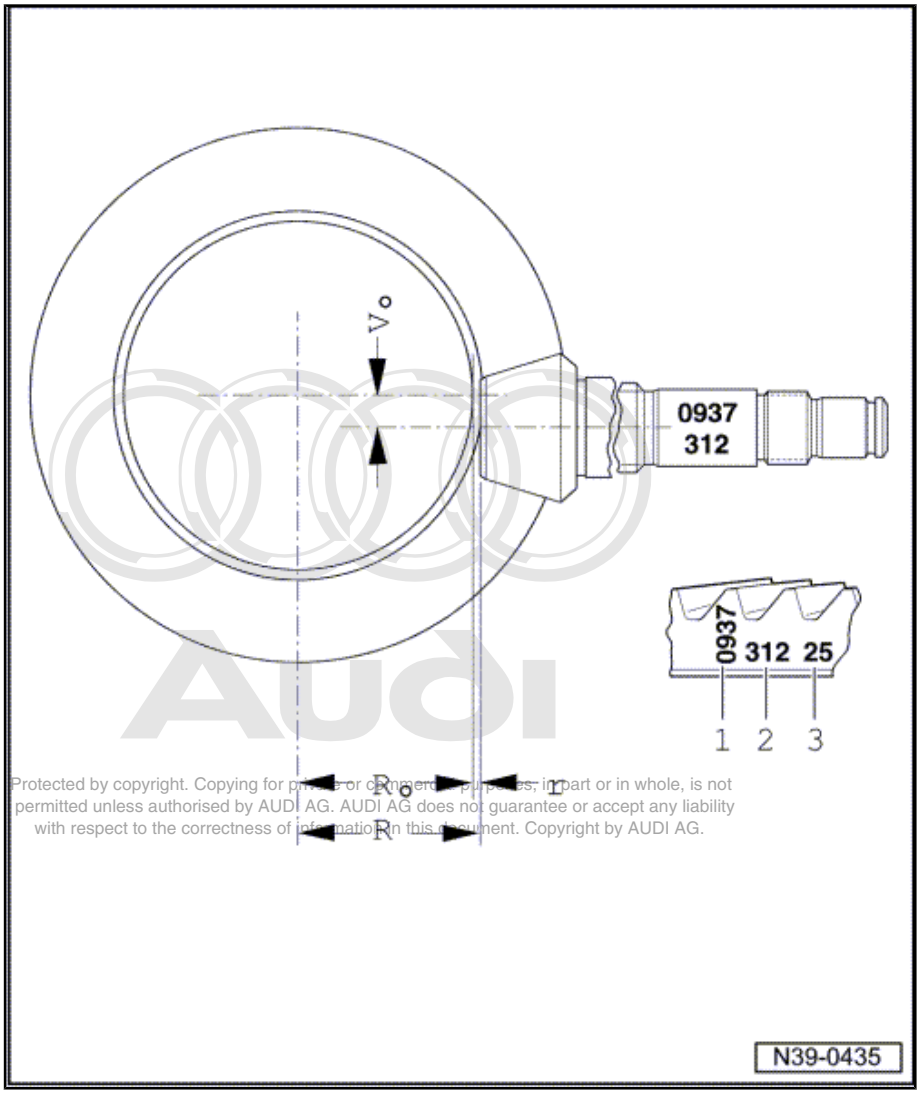

Protected by copyright. Copying for private or commercial purposes, in part or in whole, is not permitted unless authorised by AUDI AG. AUDI AG does not guarantee or accept any liability with respect to the correctness of information in this document. Copyright by AUDI AG.

Re-adjustment sequence for final drive gear set

The following work sequence is recommended to save time when the pinion shaft and crown wheel have to be adjusted:

1. Determine total shim thickness “S_{total}” for “S1” + “S2” to give specified preload for tapered roller bearings for differential.
2. Determine shim thickness “S3” to reproduce the installation position for the pinion shaft determined on the test machine in production.
3. Distribute total shim thickness “S_{total}” for “S1” + “S2” so that the specified backlash between crown wheel and pinion shaft is maintained.

Note

Installation position of shims ⇒ page 142 .

Table of adjustments

Note

When working on the final drive, re-adjustment of the pinion shaft or final drive gear set is only necessary if replacing components directly affecting the setting of the final drive. Refer to the following table to avoid unnecessary adjustment work:

Component renewed	Components requiring adjustment:		
	Crown wheel "S1"+"S2" 1) ⇒ page 148	Pinion shaft "S3" 1) via allowance "r" ⇒ page 143	Checking backlash ⇒ page 152
Final drive housing	X	X	X
Differential cage	X		X
Tapered roller bearing for pinion shaft		X	X
Tapered roller bearing for differential	X		X
Final drive gear set 2)	X	X	X
Cover for final drive	X		X

- 1) Installation position of shims ⇒ page 142 .
- 2) Pinion shaft and crown wheel; only renew together.

Protected by copyright. Copying for private or commercial purposes, in part or in whole, is not permitted unless authorised by AUDI AG. AUDI AG does not guarantee or accept any liability with respect to the correctness of information in this document. Copyright by AUDI AG.

Shims; installation position

Note

Table of adjustments when renewing individual components of rear final drive ⇒ page 142 .

S1 - Shim for crown wheel in cover for final drive

S2 - Shim for crown wheel in final drive housing

S3 - Shim for pinion shaft in final drive housing

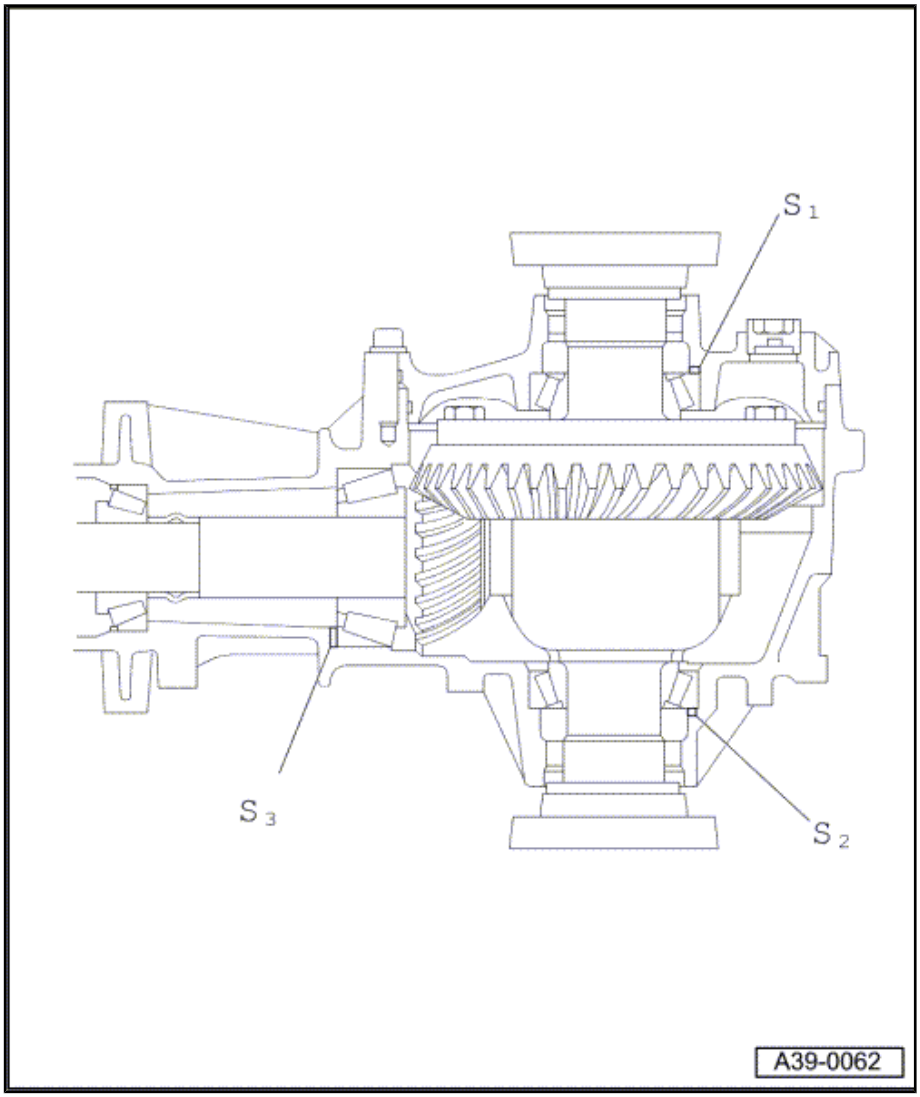

3.6 Adjusting pinion shaft

It is only necessary to readjust the pinion shaft when the following components have been renewed:

- Final drive gear set
- Tapered roller bearing for pinion shaft
- Final drive housing

Table of adjustments ⇒ page 142

Special tools and workshop equipment required

Protected by copyright. Copying for private or commercial purposes, in part or in whole, is not permitted unless authorised by AUDI AG. AUDI AG does not guarantee or accept any liability with respect to the correctness of information in this document. Copyright by AUDI AG.

- Universal measuring tool -VW 385-

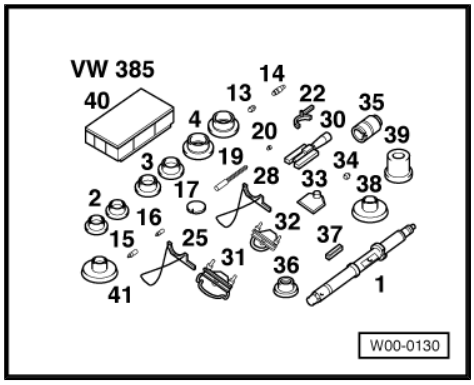

Protected by copyright. Copying for private or commercial purposes, in part or in whole, is not permitted unless authorised by AUDI AG. AUDI AG does not guarantee or accept any liability with respect to the correctness of information in this document. Copyright by AUDI AG.

Determining thickness of shim “S3”

(Setting preload of tapered roller bearings for pinion shaft)

Note

Before adjusting pinion shaft, adjust crown wheel (determine total shim thickness “S_{total}” for shims “S1” + “S2”) ⇒ page 148 .

– Secure rear final drive to assembly stand ⇒ page 116 .

– Pull outer races of both tapered roller bearings into final drive housing (without shims) ⇒ page 138 and ⇒ page 138 .

– Insert pinion shaft without spacer sleeve.

WARNING

Wear protective gloves.

– Heat inner race for tapered roller bearing to approx. 100 °C and fit onto pinion shaft.

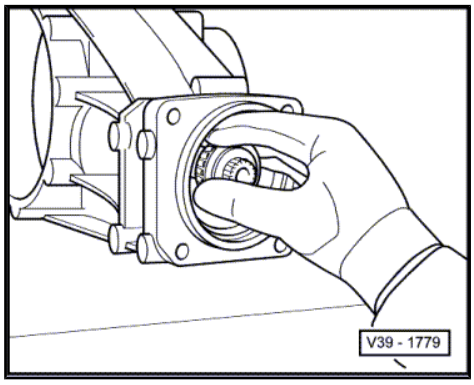

Note

- *Only install spacer sleeve for final friction torque measurement (after determining shim “S3”).*
- *Do not use additional lubricant on new tapered roller bearings for friction torque measurement. The bearings have already been treated with special oil by the manufacturer.*

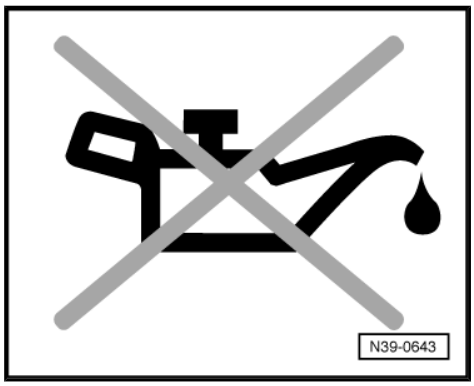

– Fit flange for propshaft and set friction torque ⇒ page 139 .

A - Torque gauge 0 ... 600 Ncm, commercially available

B - Socket attachment, 36 mm

– Tighten pinion shaft nut until the following friction torque is obtained:

• New bearings: 200 ... 250 Ncm.

• Used bearings: 30 ... 60 Ncm (used for min. 50 km).

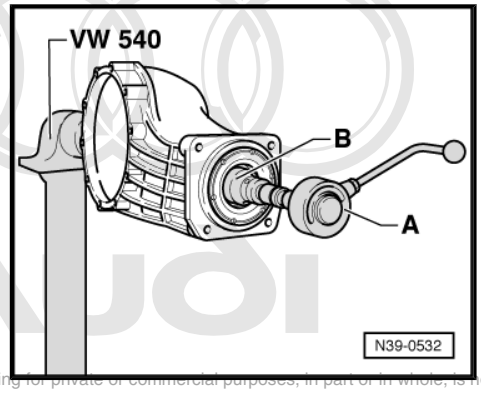

Protected by copyright. Copying for private or commercial purposes, in part or in whole, is not permitted unless authorised by AUDI AG. AUDI AG does not guarantee or accept any liability with respect to the correctness of information in this document. Copyright by AUDI AG.

– Set adjustment ring of universal measuring tool -VW 385/1- as follows:

• Dimension -a- = 60 mm

– Set moveable adjustment ring as follows:

• Dimension -b- = 55 mm.

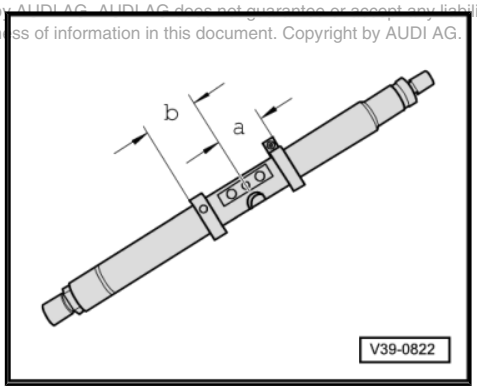

– Assemble universal measuring tool with dial gauge extension -VW 385/15- , length 9 mm as shown in illustration.

– Set universal master gauge -VW 385/30- as follows:

• Ro = 57.50 mm.

– Set dial gauge (3 mm measuring range) to “0” with a preload of 2 mm.

– Turn pinion shaft eight turns in both directions so that the tapered roller bearings settle.

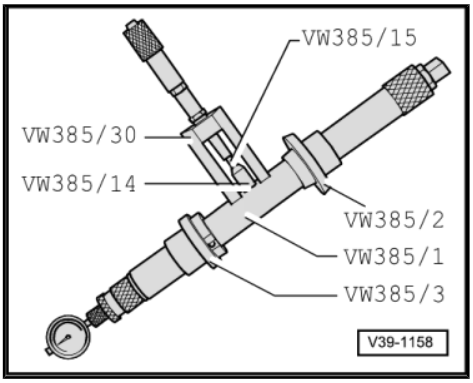

– Place end measuring plate -VW 385/33- on pinion gear.

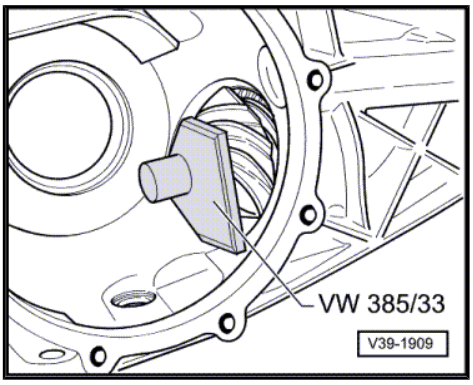

– Remove master gauge and insert measuring tool into final drive housing.

• The centring disc -VW 385/3- faces towards cover for final drive.

– Fit cover for final drive and tighten 4 bolts to 25 Nm.

– Using the moveable adjustment ring, pull 2nd centring disc out as far as possible so that the measuring tool can still just be turned by hand.

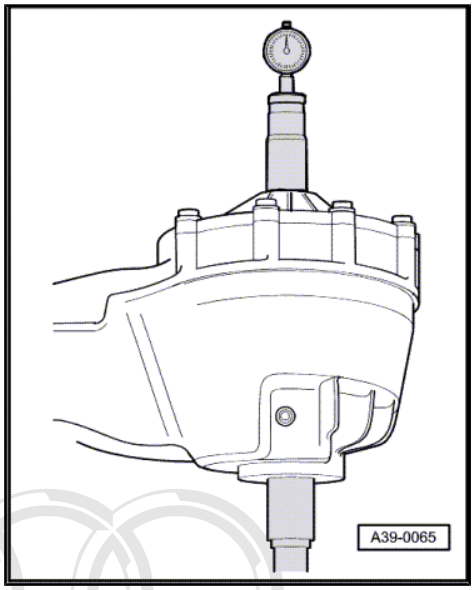

Protected by copyright. Copying for private or commercial purposes, in part or in whole, is not permitted unless authorised by AUDI AG. AUDI AG does not guarantee or accept any liability with respect to the correctness of information in this document. Copyright by AUDI AG.

Determining dimension “e”

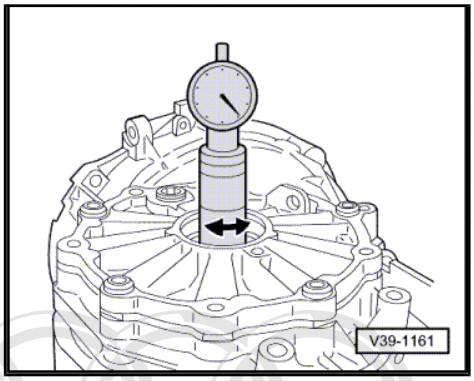

– Turn measuring tool until tip of dial gauge contacts end measuring plate on pinion shaft head and gauge indicates maximum deflection (return point). The measured value is dimension “e” (in red scale).

• Measurement in following example: “e” = 1.60 mm.

Note

Dimension “e” is required to determine thickness of shim “S3”.

– After removing universal measuring tool, check once again that the dial gauge reads “0” with 2 mm preload when master gauge -VW 385/30- is in place - otherwise repeat the measurement.

Determining shim thickness “S3”

Formula: “S3” = “e” – “r”

e - Measured value

r - Allowance (indicated on crown wheel in $^{1}/_{100}$ mm)

Protected by copyright. Copying for private or commercial purposes, in part or in whole, is not permitted unless authorised by AUDI AG. AUDI AG does not guarantee or accept any liability with respect to the correctness of information in this document. Copyright by AUDI AG.

Example:	
Measured value “e”	1.60 mm
Allowance “r”	– 0.42 mm
Thickness of shim “S3”	= 1.18 mm

– Select thickness of required shim(s) as accurately as possible from following table:

Available shims - Thickness of shims in mm [1)2)]		
0.95	1.20	1.45
1.00	1.25	1.50
1.05	1.30	1.55
1.10	1.35	
1.15	1.40	

• [1)] For Part Nos. refer to ⇒ Electronic parts catalogue

• [2)] Different shim thicknesses make it possible to obtain the exact shim thickness required, if necessary, fit 2 shims.

– Remove universal measuring tool.

– Remove pinion shaft and outer race of large tapered roller bearing and install together with measured shims “S3” and spacer sleeve ⇒ page 136 .

– Install inner race of small tapered roller bearing and tighten nut for pinion shaft until specified friction torque is obtained ⇒ page 139 .

Note

- *Do not use additional lubricant on new tapered roller bearings for friction torque measurement. The bearings have already been treated with special oil by the manufacturer.*
- *Only increase tightening torque slowly. Stop and and check friction torque several times. If the specified friction torque is exceeded, the spacer sleeve must be renewed and the adjustment procedure repeated. A spacer sleeve which has been compressed too much cannot be re-used.*

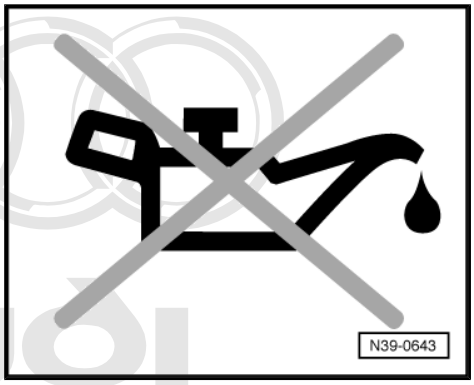

– Set following friction torque:

• New bearings: 200 ... 250 Ncm.

• Used bearings: 30 ... 60 Ncm (used for min. 50 km).

Protected by copyright. Copying for private or commercial purposes, in part or in whole, is not permitted unless authorised by AUDI AG. AUDI AG does not guarantee or accept any liability with respect to the correctness of information in this document. Copyright by AUDI AG.

Checking dimension "r"

– Turn pinion shaft eight turns in both directions so that the tapered roller bearings settle.

– Insert universal measuring tool and check measurement.

• If the correct shims have been selected, the dial gauge (reading anti-clockwise in the red range), should now show the allowance "r" within a tolerance of ± 0.04 mm.

– Peen pinion shaft nut with a punch.

– Measure and mark radial run-out at flange for propshaft ⇒ page 111 .

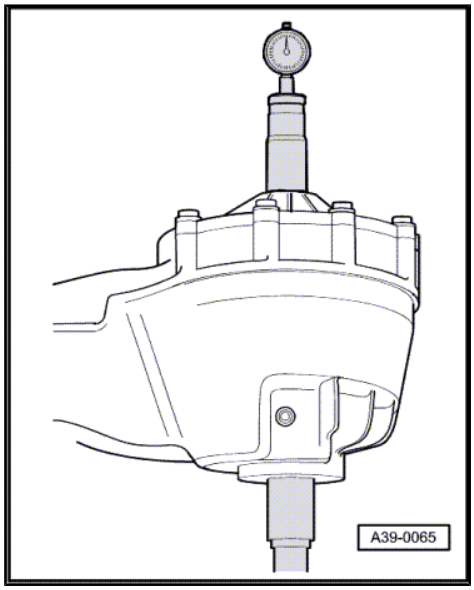

3.7 Adjusting crown wheel

(Adjusting differential)

It is only necessary to readjust the crown wheel when the following components have been renewed:

- Final drive housing
- Cover for final drive
- Tapered roller bearing for differential
- Differential cage
- Final drive gear set

Table of adjustments ⇒ page 142

Special tools and workshop equipment required

- Measuring plate -VW 385/17-
- Universal dial gauge bracket -VW 387-
- Adjustable measuring lever -VW 388-
- Crown wheel adjusting tool -VW 521-
- Dial gauge extension, 30 mm
- Dial gauge
- Torque gauge 0 ... 600 Ncm, commercially available

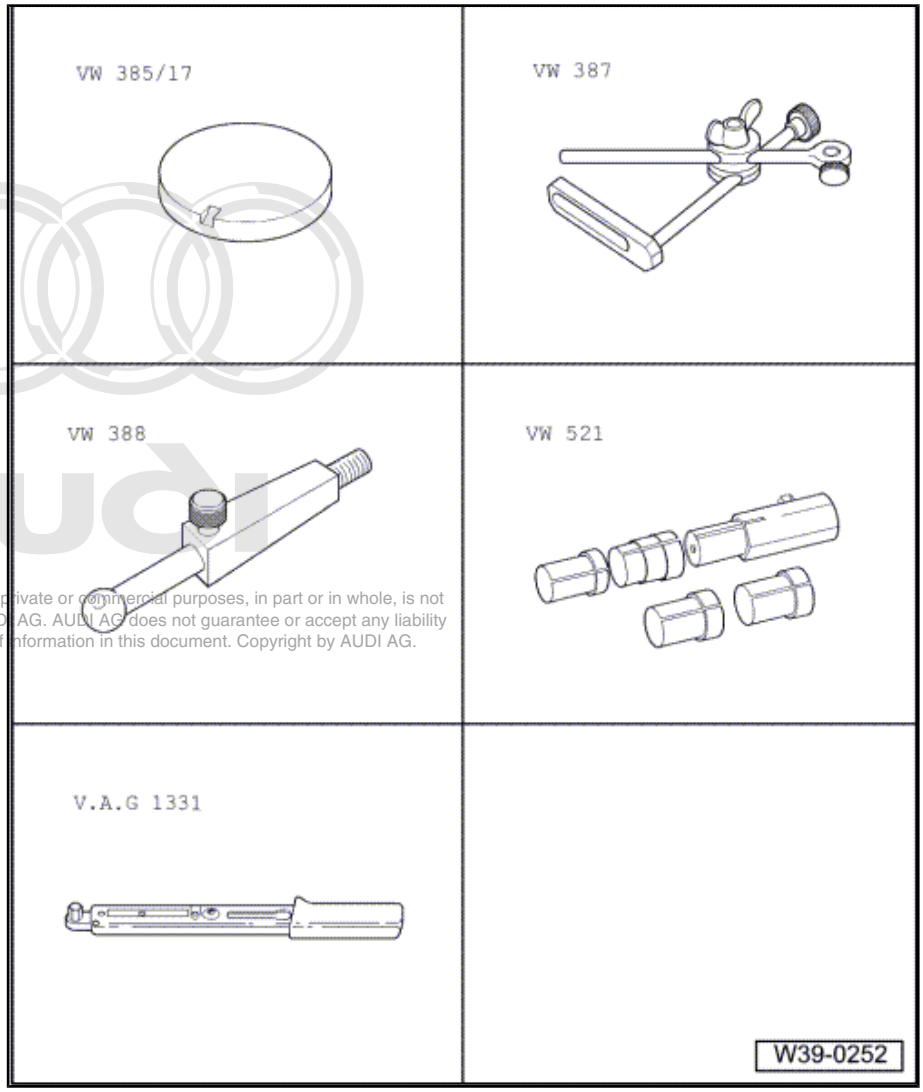

Protected by copyright. Copying for private or commercial purposes, in part or in whole, is not permitted unless authorised by AUDI AG. AUDI AG does not guarantee or accept any liability with respect to the correctness of information in this document. Copyright by AUDI AG.

Determining total shim thickness "S_{total}" for shims "S1" + "S2"

(Adjustment of pre-load of tapered roller bearings for differential)

- Pinion shaft removed.

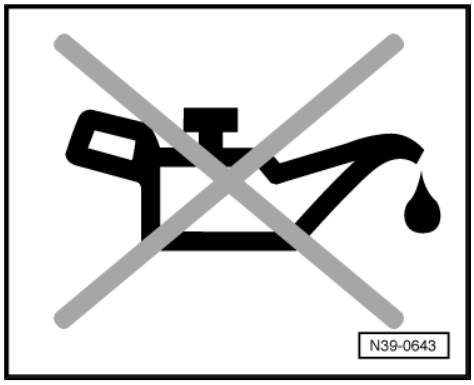

Note

- *If only the tapered roller bearings for the differential are being renewed, the crown wheel can be removed from the differential cage. The pinion shaft then does not have to be removed.*
- *The tapered roller bearings for the differential are low-friction bearings. The friction torque therefore only has limited use as a means of checking the adjustment. Correct adjustment can only be obtained by determining the total shim thickness "Stotal".*
- *Do not use additional lubricant on new tapered roller bearings for friction torque measurement. The bearings have already been treated with special oil by the manufacturer.*

– Lever out flange shaft oil seal using an assembly lever.

– Remove tapered roller bearing outer races for differential and take out shims ⇒ page 127 and ⇒ page 129 .

– Press outer race of left-hand tapered roller bearing for differential (housing side) with shim "S2" into final drive housing ⇒ page 127 . To perform the measurement, use a shim "S2*" with a thickness of 1.00 mm (one 0.80 mm shim and one 0.20 mm shim).

Note

For measurement purposes a shim "S2" with a thickness of 1.00 mm is fitted provisionally. It is referred to below as "S2". After determining the backlash "S2*" will be replaced with the correct "S2".*

– Knock in outer race of right-hand tapered roller bearing for differential (final drive cover side) without shims as far as stop ⇒ page 129 .

– Insert differential into final drive housing.

• The crown wheel is located on the right side (cover side).

– Fit cover for final drive and tighten bolts to 25 Nm.

– Fit crown wheel adjusting tool -VW 521/4- and -VW 521/8- onto housing side in differential cage.

– Turn cover side of final drive housing upwards.

– Turn differential eight turns in both directions so that the tapered roller bearings settle.

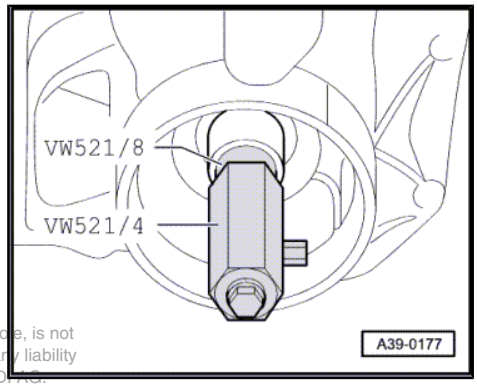

Protected by copyright. Copying for private or commercial purposes, in part or in whole, is not permitted unless authorised by AUDI AG. AUDI AG does not guarantee or accept any liability with respect to the correctness of information in this document. Copyright by AUDI AG.

– Place measuring plate -VW 385/17- onto differential.

– Fit measuring tools as shown in the illustration.

A - Dial gauge extension (approx. 30 mm long)

B - Hexagon bolt M8 x 45

– Place dial gauge extension on centre of measuring plate - VW 385/17- .

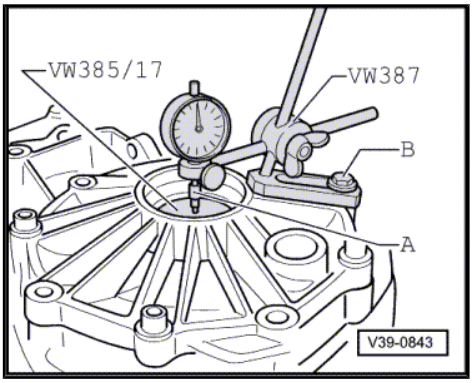

– Set dial gauge (3 mm measuring range) to “0” with a preload of 2 mm.

– Raise differential without turning, read clearance off dial gauge and note down.

• Measurement in following example: 0.50 mm.

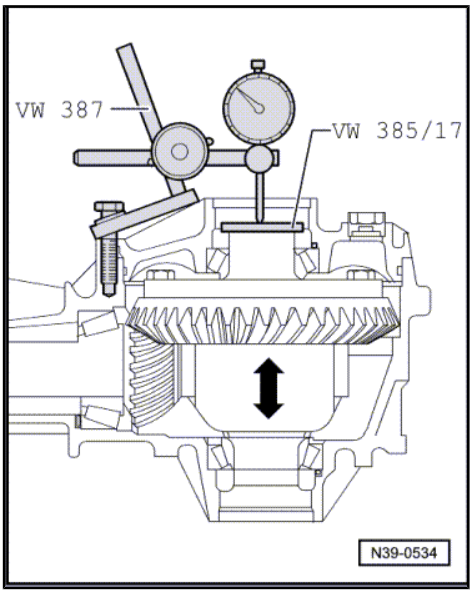

Note

If the measurement has to be repeated, the differential must again first be turned 8 turns in each direction to settle the tapered roller bearings.

Formula: “S_{total}” = “S2*” + measured value + bearing preload

Protected by copyright. Copying for private or commercial purposes, in part or in whole, is not permitted unless authorised by AUDI AG. AUDI AG does not guarantee or accept any liability with respect to the correctness of information in this document. Copyright by AUDI AG.

Example:

Installed shim(s) “S2*”	1.00 mm
Measured value	+ 0.50 mm
Bearing preload (constant value)	+ 0.30 mm
Total shim thickness “S_{total}” for shims “S1” + “S2”	= 1.80 mm

Determining thickness of shim “S1*”

Note

♦ *The provisional shim “S1*” will be replaced with the final shim “S1” after determining the backlash.*

♦ *Total shim thickness "S_{total}" remains unchanged.*

Formula: “S1*” = “S_{total}” – “S2*”

Example:

Total shim thickness “S_{total}” for shims “S1” + “S2”	1.80 mm
Installed shim(s) “S2*”	– 1.00 mm
Thickness of shim “S1*”	= 0.80 mm

– Determine shim(s) as accurately as possible according to table ⇒ page 154 .

Measuring friction torque (for checking adjustment)

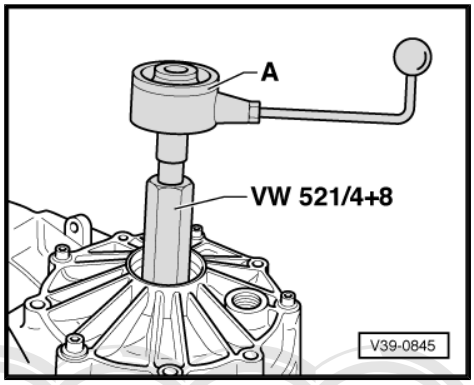

- Pinion shaft removed.
- Differential fitted with shims “S1*” and “S2*”.

– Fit torque gauge 0 ... 600 Ncm -item A- onto differential.

– Read off friction torque. Specifications:

- New bearings: 150 ... 300 Ncm.
- Used bearings: 30 ... 60 Ncm (used for min. 50 km).

Note

- *The tapered roller bearings for the differential are low-friction bearings. The friction torque therefore only has limited use as a means of checking the adjustment. Correct adjustment can only be obtained by determining the total shim thickness “S_{total}”.*
- *Do not use additional lubricant on new tapered roller bearings for friction torque measurement. The bearings have already been treated with special oil by the manufacturer.*
- *If the final drive set (pinion shaft and crown wheel) is being re-adjusted, the adjustment of the pinion shaft should be performed now, and the adjustment checked* *⇒ page 143* *.*

Protected by copyright. Copying for private or commercial purposes, in part or in whole, is not permitted unless authorised by AUDI AG. AUDI AG does not guarantee or accept any liability with respect to the correctness of information in this document. Copyright by AUDI AG.

Adjusting backlash

(Positioning crown wheel in final drive housing)

- Pinion shaft with shim “S3” installed.
- Differential with shims “S1*” + “S2*” installed.

– Insert differential into final drive housing, fit final drive cover and tighten all bolts to 25 Nm.

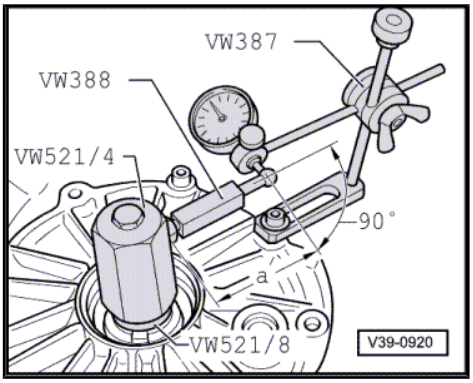

– Turn differential five turns in both directions so that the tapered roller bearings settle.
– Fit measuring tools with dial gauge extension -VW 382/10- (6 mm, flat) as shown in the illustration.
– Adjust measuring lever -VW 388- .
• Dimension -a- = 60 mm
– Measure backlash between faces of gear teeth as follows:
– Turn crown wheel until it makes contact with the face of one tooth (end of backlash travel).
– Set dial gauge to “0” with a preload of 1 mm.
– Turn back crown wheel until it makes contact with opposite face (backlash).
– Read off backlash and note reading.
– Turn crown wheel through 90° and repeat measurement 3 times.

Note

If the individual measurements differ by more than 0.06 mm, this means that the installation of the crown wheel is not correct or that the final drive gear set itself is defective. Check installation; renew final drive gear set if necessary.

Determining average backlash

Example:	
1st measured value	0.28 mm
2nd measured value	+ 0.30 mm
3rd measured value	+ 0.30 mm
4th measured value	+ 0.28 mm
Sum of measured values	= 1.16 mm

Result: the average backlash is 1.16 mm : 4 = 0.29 mm.

Determining thickness of shim “S2”

Formula: “S2” = “S2*” – average backlash + lift

Example:	
Inserted shim “S2*”	1.00 mm
Average backlash	– 0.29 mm
Lift (constant value)	+ 0.15 mm
Thickness of shim “S2”	= 0.86 mm

– Select thickness of required shim(s) as accurately as possible from following table:

Copyright by AUDI AG. Reproduction or duplication of this document in whole, is not permitted without authorisation by AUDI AG. AUDI AG does not guarantee or accept any liability with respect to the correctness of information in this document. Copyright by AUDI AG.

Available shims - Thickness of shims in mm 1)2)		
0.15	0.50	1.50
0.20	0.80	
0.25	1.00	

• 1) For Part Nos. refer to ⇒ Electronic parts catalogue
• 2) Different shim thicknesses make it possible to obtain the exact shim thickness required, if necessary, fit 2 shims.

Determining thickness of shim “S1”

Formula: “S1” = “S_{total}” – “S2”

Example:

Total shim thickness “S_{total}” for shims “S1” + “S2”	1.80 mm
Thickness of shim “S2”	– 0.86 mm
Thickness of shim “S1”	= 0.94 mm

– Select thickness of required shim(s) as accurately as possible from following table:

Available shims - Thickness of shims in mm [1)2)]		
0.15	0.50	0.90
0.20	0.60	1.00
0.30	0.70	1.20
0.40	0.80	

- [1)] For Part Nos. refer to ⇒ Electronic parts catalogue
- [2)] Different shim thicknesses make it possible to obtain the exact shim thickness required, if necessary, fit 2 shims.

Checking adjustment

- Pinion shaft with shim “S3” installed.
- Differential with shims “S1” + “S2” installed.

– Turn differential five turns in both directions so that the tapered roller bearings settle.

– Measure backlash four times on circumference.

- Specification: 0.12 ... 0.22 mm

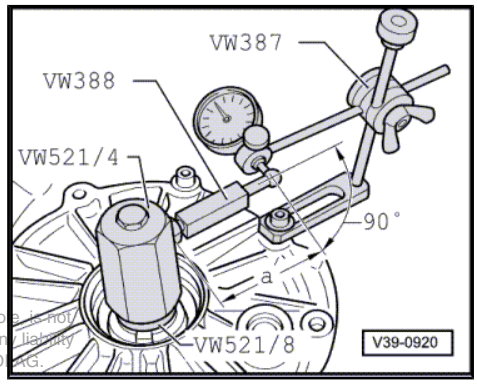

Protected by copyright. Copying for private or commercial purposes, in part or in whole, is not permitted unless authorised by AUDI AG. AUDI AG does not guarantee or accept any liability with respect to the correctness of information in this document. Copyright by AUDI AG.

Note

♦ *Adjustment must be repeated if backlash is outside tolerance. The total shim thickness “S_{total}” must remain unchanged.*

♦ *The discrepancy between individual measured values must not exceed 0.06 mm.*

39 – Final drive - front differential

1 Gear oil in front final drive

1.1 Checking gear oil level in front final drive

Special tools and workshop equipment required

♦ Hexagon key extension, 8 mm -3247-

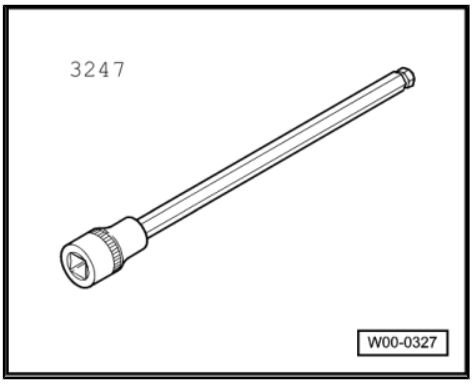

♦ Used oil collection and extraction unit -V.A.G 1782-

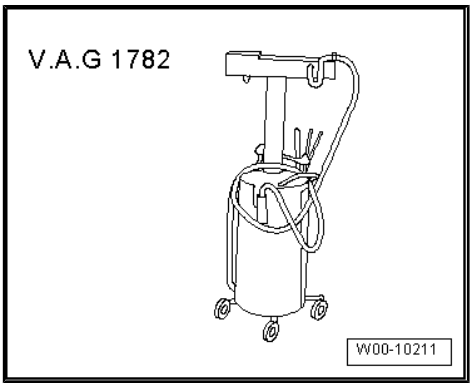

♦ Allen key (8 mm)

♦ Safety goggles

Test condition

- Gear oil temperature approx. 60 °C (perform road test if necessary).

Test sequence

Protected by copyright. Copying for private or commercial purposes, in part or in whole, is not permitted unless authorised by AUDI AG. AUDI AG does not guarantee or accept any liability with respect to the correctness of information in this document. Copyright by AUDI AG.

Note

♦ *General repair instructions* ⇒ page 16 .

♦ *Observe rules for cleanliness when working on automatic gearbox* ⇒ page 19 .

– Drive vehicle onto a lifting platform or over an inspection pit in order for it to be absolutely horizontal.

– Place used oil collection and extraction unit -V.A.G 1782- below gearbox.

WARNING

Wear safety goggles.

– Remove screw plug for oil filler hole -arrow- using an Allen key (8 mm).

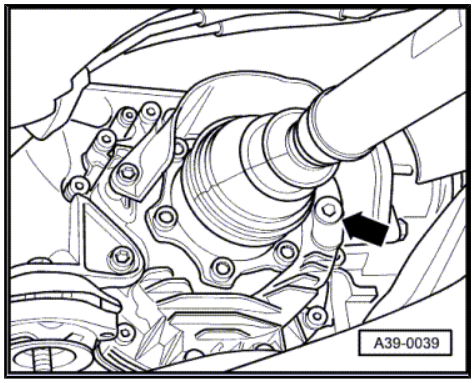

Note

Use only an Allen key to unscrew screw plug (do not use hexagon key extension, 8 mm -3247-).

- Specification: gear oil level up to bottom lip of filler hole.

– Drain off any excess oil or top up to proper level; specification ⇒ page 10 .

Note

Protected by copyright. Copying for private or commercial purposes, in part or in whole, is not permitted unless authorised by AUDI AG. AUDI AG does not guarantee or accept any liability with respect to the correctness of information in this document. Copyright by AUDI AG.

The screw plug with seal must be renewed.

– Tighten new screw plug for oil filler hole using hexagon key extension (8 mm) -3247- .

Tightening torque

Component	Nm
Screw plug for oil filler hole	35

1.2 Filling up gear oil in front final drive after repairs

Special tools and workshop equipment required

♦ Hexagon key extension, 8 mm -3247-

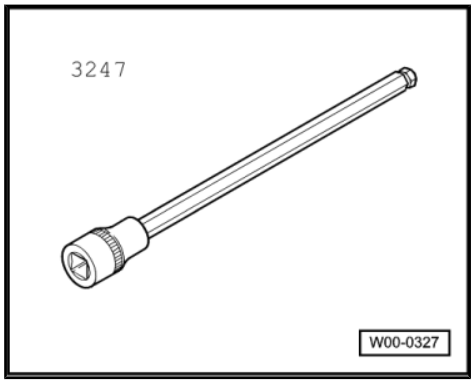

- Used oil collection and extraction unit -V.A.G 1782-

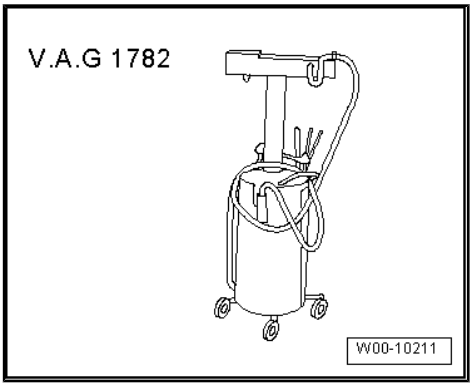

- Allen key (8 mm)
- Safety goggles

Filling with gear oil

Note

- *General repair instructions ⇒ page 16 .*
- *Observe rules for cleanliness when working on automatic gearbox ⇒ page 19 .*

– Drive vehicle onto a lifting platform or over an inspection pit in order for it to be absolutely horizontal.

– Place used oil collection and extraction unit -V.A.G 1782- below gearbox.

– Remove screw plug for oil filler hole -arrow- using an Allen key (8 mm).

– Fill front final drive slowly and at a constant rate for a period of at least 5 minutes until gear oil (capacity and specification ⇒ page 10) comes out at lower edge of oil filler hole.

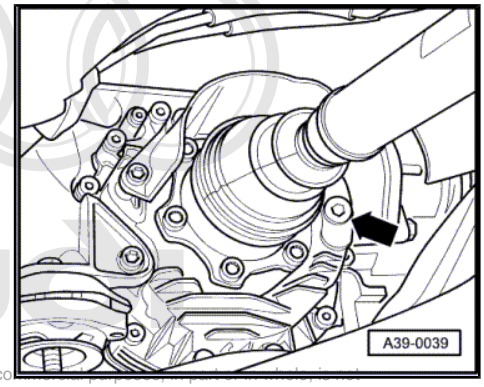

Note

The fill-up period of at least 5 minutes is necessary so that the internal oil level can be balanced out between differential and baffle chamber.

Protected by copyright. Copying for private or co
permitted unless authorised by AUDI AG. AUDI AG does not guarantee or accept any liability
with respect to the correctness of information in this document. Copyright by AUDI AG.

– Fit old screw plug.

– Road test vehicle until gear oil reaches a temperature of approx. 60 °C.

– Check gear oil level in front final drive ⇒ page 155 .

– Tighten new screw plug for oil filler hole using hexagon key extension (8 mm) -3247- .

Tightening torque

Component	Nm
Screw plug for oil filler hole	35

2 Servicing front final drive

2.1 Front final drive - exploded view of components

Note

- *General repair instructions ⇒ page 16 .*
- *Observe rules for cleanliness when working on automatic gearbox ⇒ page 19 .*

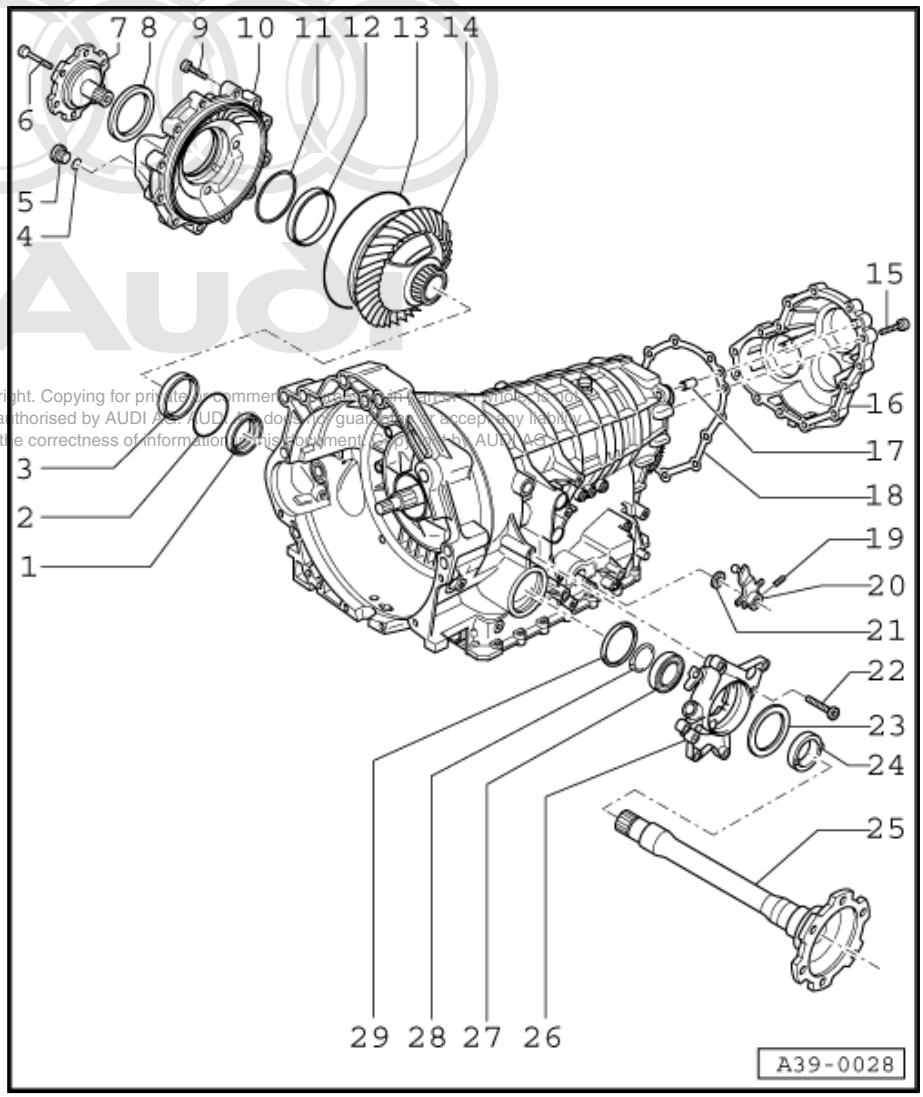

Protected by copyright. Copying for private or commercial purposes, in part or in whole, is not permitted unless authorised by AUDI AG. AUDI AG does not guarantee or accept any liability with respect to the correctness of information in this document. Copyright by AUDI AG.

1 - Twin-lip oil seal between final drive and gearbox housing
- ❑ Renewing ⇒ page 171

2 - Shim
- ❑ Behind tapered roller bearing outer race

3 - Tapered roller bearing outer race

4 - Oil seal
- ❑ Cannot be renewed separately

5 - Screw plug, 35 Nm
- ❑ Renew

6 - Bolt, 23 Nm

7 - Flange shaft (right-side)
- ❑ Removing and installing ⇒ page 161

8 - Oil seal for flange shaft
- ❑ Renewing ⇒ page 166

9 - Bolt, 23 Nm
- ❑ Follow correct sequence when slackening and tightening ⇒ page 174

10 - Cover for final drive
- ❑ Removing and installing ⇒ page 174

11 - Shim
- ❑ Behind tapered roller bearing outer race

12 - Tapered roller bearing outer race

13 - O-ring
- ❑ Renewing ⇒ page 174

14 - Differential

15 - Bolt, 23 Nm
- ❑ Follow correct tightening sequence ⇒ page 169 or ⇒ page 171

16 - Cover for front axle drive
- ❑ For front-wheel drive

- ❑ Removing and installing ⇒ page 167
- ❑ For four-wheel drive: intermediate flange for front axle drive

17 - Dowel sleeve

18 - Gasket

- ❑ Renewing (for front-wheel drive) ⇒ “2.6 Removing and installing cover for front axle drive”, page 167
- ❑ Renewing (for four-wheel drive)
  ⇒ “2.7 Removing and installing intermediate flange for front axle drive”, page 169

19 - Spring pin

20 - Selector shaft lever

21 - Oil seal for selector shaft

- ❑ Renewing ⇒ page 103

22 - Bolt, 23 Nm

23 - Oil seal for flange shaft

- ❑ Renewing ⇒ page 163

24 - Drive wheel

- ❑ For speedometer sender -G22-
- ❑ Installation position ⇒ page 166

25 - Flange shaft (left-side)

- ❑ Removing and installing ⇒ page 163

26 - Bearing bracket for flange shaft

27 - Grooved ball bearing for flange shaft

- ❑ Renewing ⇒ page 163

28 - Circlip

29 - O-ring

- ❑ Square cross-section
- ❑ Remove and install left flange shaft in order to renew O-ring ⇒ page 159

2.2 Removing and installing flange shaft (left-side)

Special tools and workshop equipment required

- ♦ Used oil collection and extraction unit -V.A.G 1782-

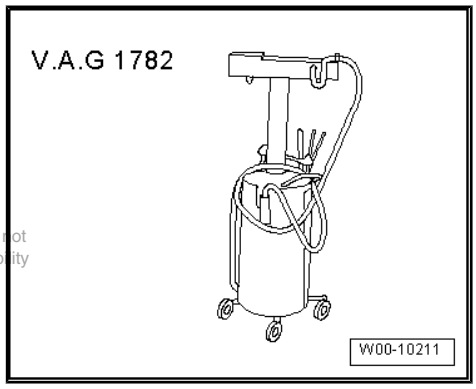

Protected by copyright. Copying for private or commercial purposes, in part or in whole, is not permitted unless authorised by AUDI AG. AUDI AG does not guarantee or accept any liability with respect to the correctness of information in this document. Copyright by AUDI AG.

Removing

Note

- *General repair instructions ⇒ page 16 .*
- *Observe rules for cleanliness when working on automatic gearbox ⇒ page 19 .*

– Unbolt heat shield for left-side drive shaft -arrows-.

– Remove drive shaft (left-side) ⇒ Rep. Gr. 40 .

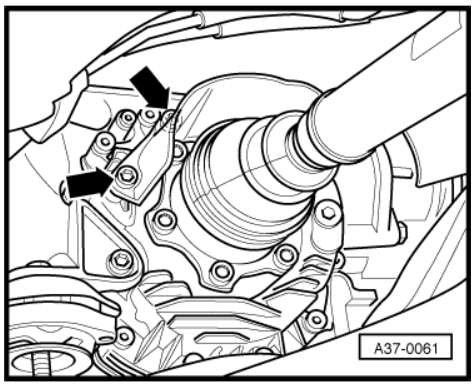

– Remove oil filler plug -arrow- on final drive cover and extract at least 0.5 ltr. of gear oil from final drive with used oil collection and extraction unit -V.A.G 1782- .

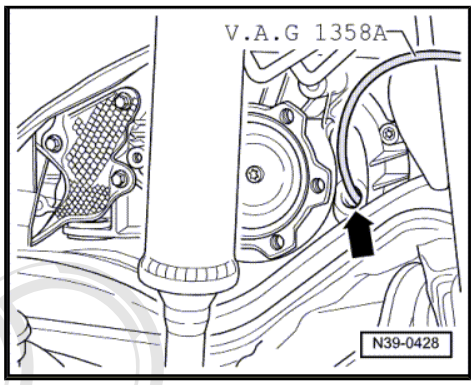

Caution

It is essential to extract gear oil from the final drive as there is otherwise a danger of mixing gear oil with ATF.

– Remove speedometer sender -G22- ⇒ page 102 .

– Unscrew bracket for electrical connector of speedometer sender -G22- from flange shaft bearing bracket.

– Place used oil collection and extraction unit -V.A.G 1782- below gearbox.

– Unbolt bearing bracket for flange shaft (left-side) -arrows-.

– Pull out flange shaft (left-side).

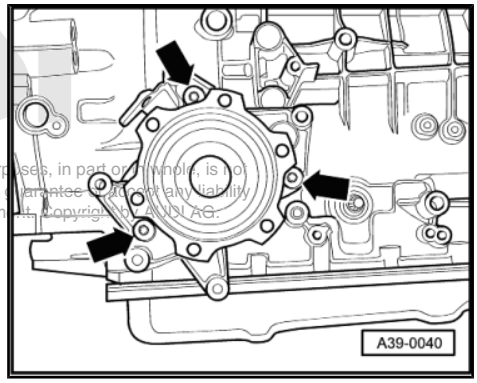

Note

- *While pulling out the flange shaft (left-side), it must be guided carefully by hand to avoid damaging the twin-lip oil seal between the final drive and gearbox housing.*
- *When the gearbox is in the vehicle it is possible to pull out the flange shaft (left-side) between the body and the subframe by rotating the bearing bracket for the flange shaft approx. 60° to the right away from the installation position.*

Protected by copyright. Copying for private or commercial purposes, in part or in whole, is not permitted unless authorised by AUDI AG. AUDI AG does not guarantee or assume any liability with respect to the content of this document. Copyright © AUDI AG.

Installing

Installation is carried out in reverse sequence; note the following:

– Renew O-ring -arrow B- in bearing bracket for flange shaft (left-side).

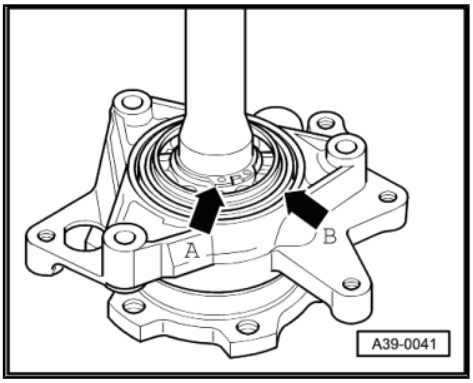

– Check that there are no sharp edges on gearbox end of flange shaft -arrow-; deburr edges if necessary.

– Insert flange shaft (left-side) into gearbox.

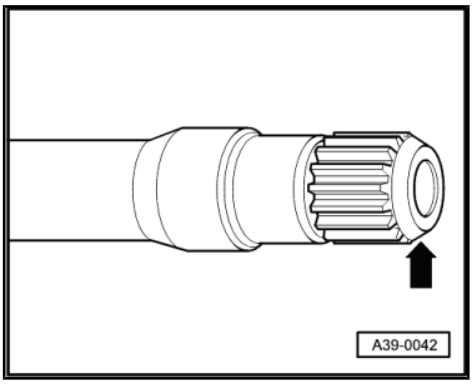

Note

While pushing in the flange shaft (left-side), it must be guided carefully by hand to avoid damaging the twin-lip oil seal between the final drive and gearbox housing.

– Install speedometer sender -G22- ⇒ page 102 .

– Install drive shaft (left-side) ⇒ Rep. Gr. 40 .

– Fill front final drive with gear oil and check oil level ⇒ page 155 .

Tightening torques

Component	Nm
Bearing bracket for flange shaft (left-side) to gearbox	23
Heat shield for drive shaft to gearbox	23

2.3 Removing and installing flange shaft (right-side)

Special tools and workshop equipment required

♦ Used oil collection and extraction unit -V.A.G 1782-

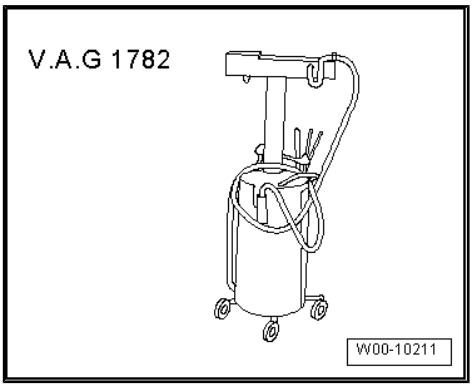

Protected by copyright. Copying for private or commercial purposes, in part or in whole, is not permitted unless authorised by AUDI AG. AUDI AG does not guarantee or accept any liability with respect to the correctness of information in this document. Copyright by AUDI AG.

Removing

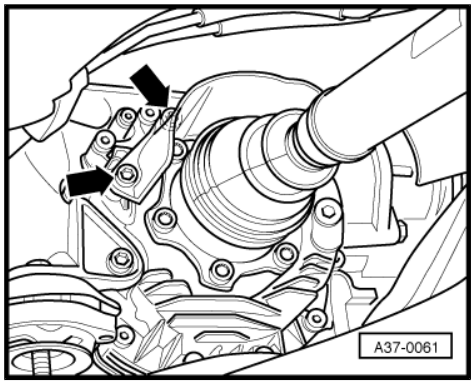

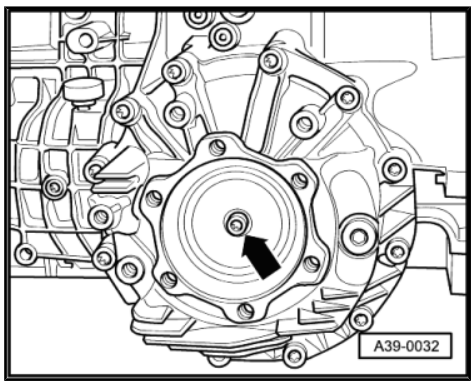

Note

- *General repair instructions ⇒ page 16 .*
- *Observe rules for cleanliness when working on automatic gearbox ⇒ page 19 .*

– If fitted, unbolt heat shield for right-side drive shaft -arrows-.

– Remove drive shaft (right-side) ⇒ Rep. Gr. 40 .

– Remove bolt -arrow- securing flange shaft. To do so, screw two bolts into flange and counterhold flange shaft with suitable lever.

– Place used oil collection and extraction unit -V.A.G 1782- below gearbox.

– Pull out flange shaft.

Installing

Installation is carried out in reverse sequence; note the following:

– Tighten bolt -arrow- securing flange shaft. To do so, screw two bolts into flange and counterhold flange shaft with suitable lever.

– Install drive shaft (right-side) ⇒ Rep. Gr. 40 .

– Check gear oil level in front final drive ⇒ page 155 .

Tightening torques

Component	Nm
Flange shaft to gearbox	23
Heat shield for drive shaft to gearbox	23

Protected by copyright. Copying for private or commercial purposes, in part or in whole, is not permitted unless authorised by AUDI AG. AUDI AG does not guarantee or accept any liability with respect to the correctness of information in this document. Copyright by AUDI AG.

2.4 Renewing oil seal and grooved ball bearing for flange shaft (left-side)

Special tools and workshop equipment required

- Thrust plate -VW 401-
- Thrust plate -VW 402-
- Press tool -VW 407-
- Press tool -VW 412-
- Oil seal extractor lever -VW 681-
- Tube -32-109-

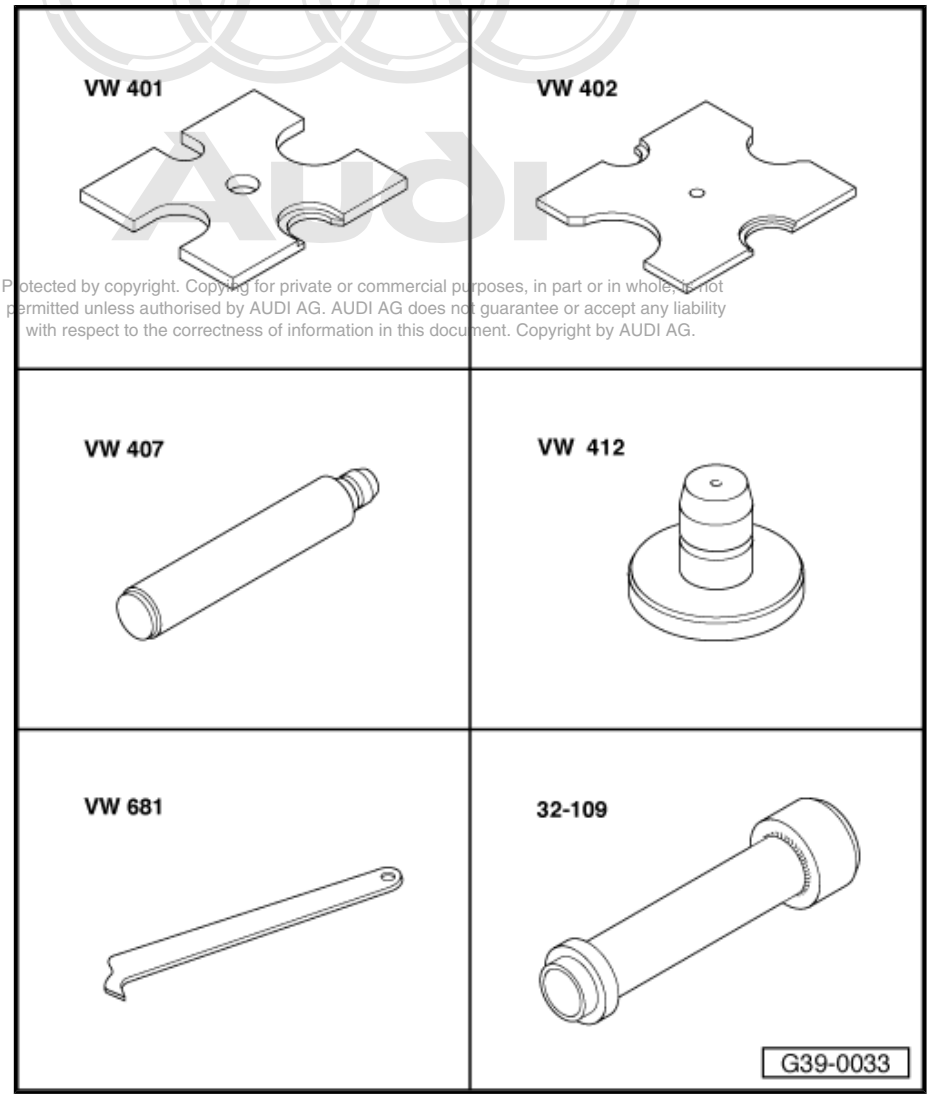

Protected by copyright. Copying for private or commercial purposes, in part or in whole, is not permitted unless authorised by AUDI AG. AUDI AG does not guarantee or accept any liability with respect to the correctness of information in this document. Copyright by AUDI AG.

- Tube -2040-

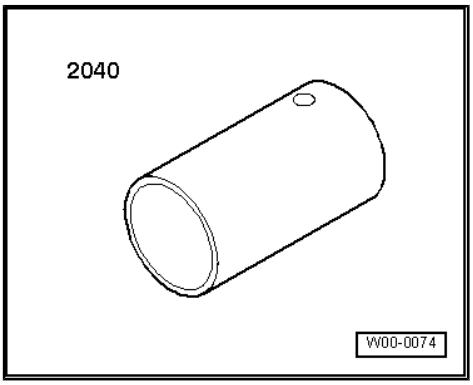

♦ Drift -3384-

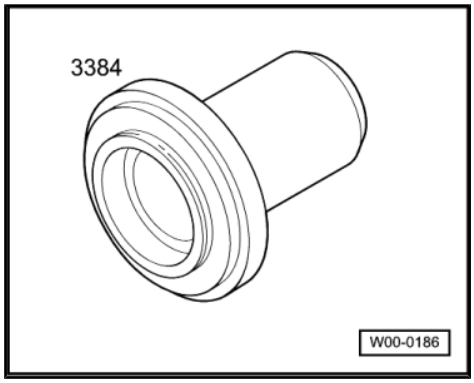

Procedure

– Remove flange shaft (left-side) ⇒ page 159 .

– Remove circlip -arrow A- for grooved ball bearing.

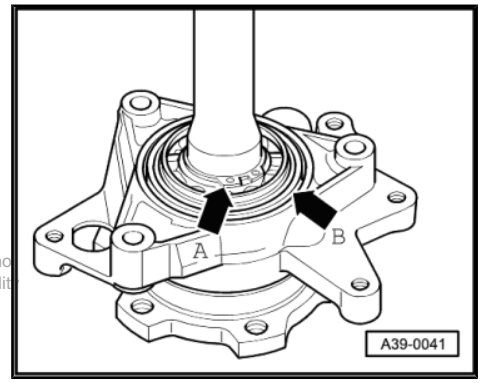

Protected by copyright. Copying for private or commercial purposes, in part or in whole, is not permitted unless authorised by AUDI AG. AUDI AG does not guarantee or accept any liability with respect to the correctness of information in this document. Copyright by AUDI AG.

– Press flange shaft out of flange shaft bearing bracket.

– Use oil seal extractor lever -VW 681- to extract flange shaft oil seal.

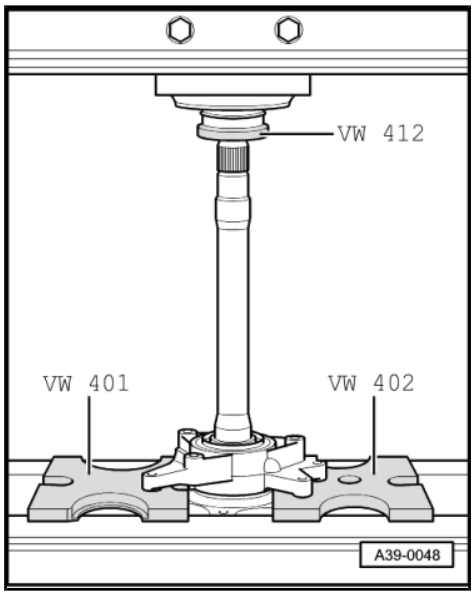

– Press out grooved ball bearing from bearing bracket.

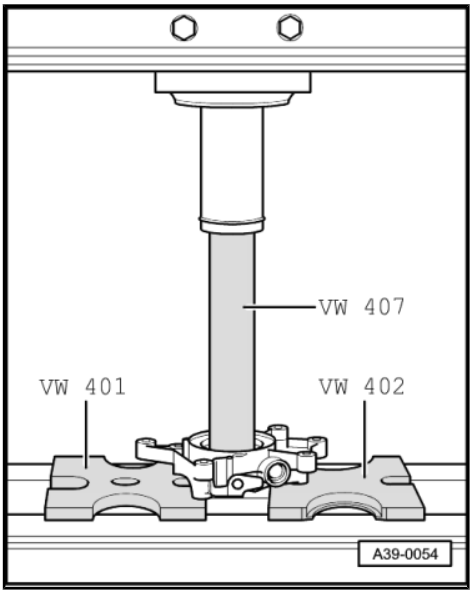

– Press in new grooved ball bearing into bearing bracket.

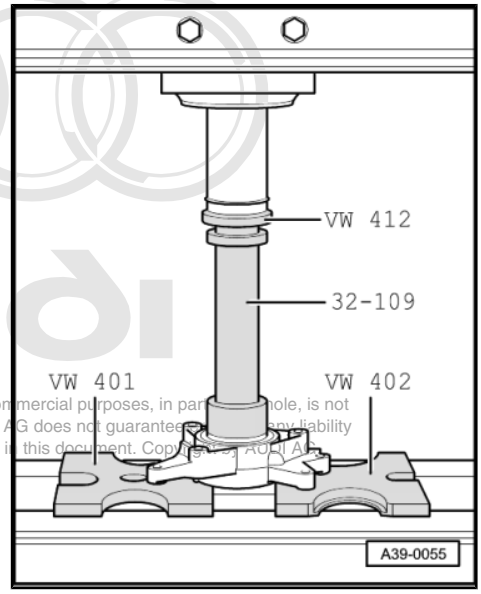

Protected by copyright. Copying for private or commercial purposes, in part or in whole, is not permitted unless authorised by AUDI AG. AUDI AG does not guarantee or assume any liability with respect to the correctness of information in this document. Copyright by AUDI AG.

– Lightly lubricate outer circumference and sealing lip of new oil seal with gear oil.
– Drive in oil seal until thrust piece reaches stop (keep oil seal straight while installing).
• Installation position: open side of oil seal points towards gearbox

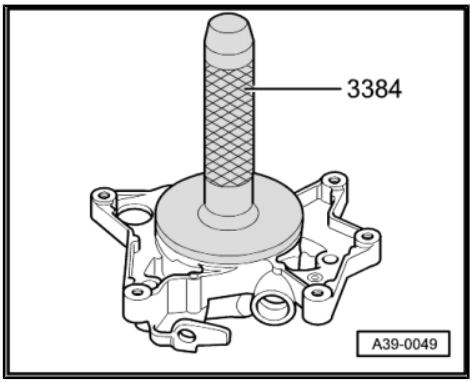

– Fit drive wheel for speedometer sender -G22- onto flange shaft -arrow-.

• Installation position: the coupling lugs on the drive wheel must engage in the slots on the flange shaft.

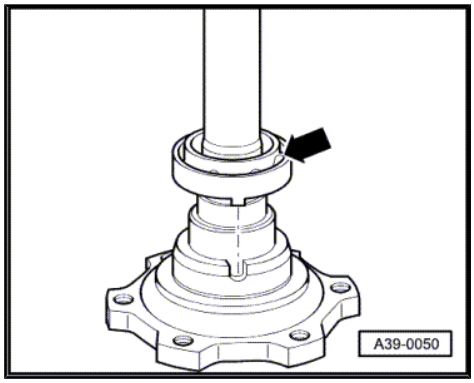

Note

If necessary, apply grease to the contact surface in order to hold the drive wheel in position.

– Press bearing bracket with grooved ball bearing onto flange shaft.

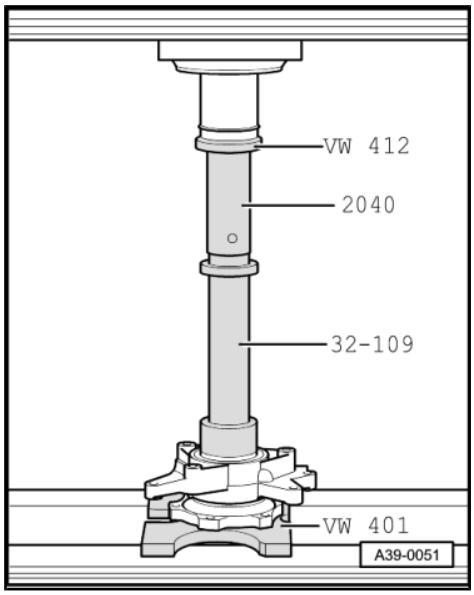

Protected by copyright. Copying for private or commercial purposes, in part or in whole, is not permitted unless authorised by AUDI AG. AUDI AG does not guarantee or accept any liability with respect to the correctness of information in this document. Copyright by AUDI AG.

– Fit circlip -arrow A-.

– Install flange shaft (left-side) ⇒ page 159 .

– Fill front final drive with gear oil and check oil level ⇒ page 155 .

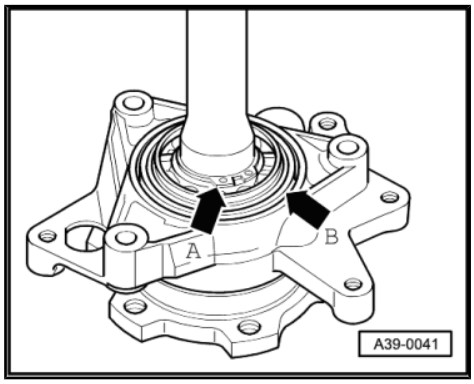

2.5 Renewing oil seal for flange shaft (right-side)

Special tools and workshop equipment required

♦ Oil seal extractor lever -VW 681-

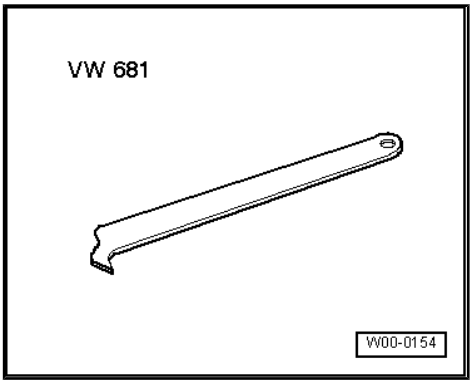

♦ Drift -3382-

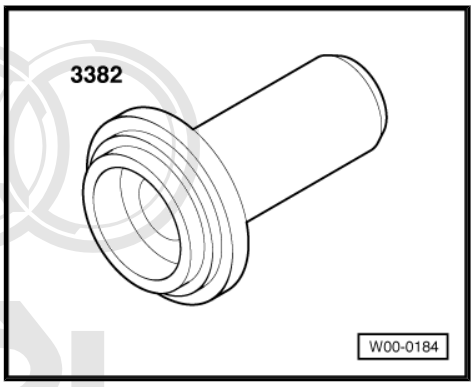

Protected by copyright. Copying for private or commercial purposes, in part or in whole, is not permitted unless authorised by AUDI AG. AUDI AG does not guarantee or assume any liability with respect to the correctness of information in this document. Copyright by AUDI AG.

Procedure

Note

♦ *General repair instructions* ⇒ *page 16* .

♦ *Observe rules for cleanliness when working on automatic gearbox* ⇒ *page 19* .

– Remove flange shaft (right-side) ⇒ page 161 .

– Use oil seal extractor lever -VW 681- to extract flange shaft oil seal.

– Clean seat of oil seal.

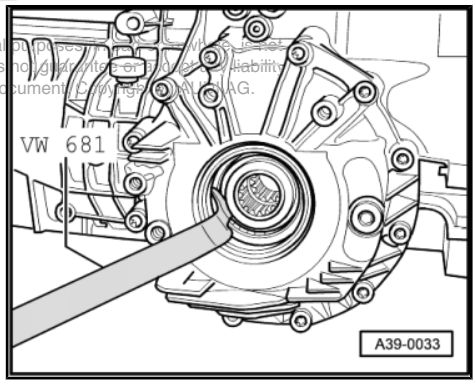

– Lightly lubricate outer circumference of new oil seal with gear oil.

– Drive in oil seal as far as stop (keep oil seal straight while installing).

• Installation position: the open side of the oil seal should face the gearbox.

– Install flange shaft (right-side) ⇒ page 161 .

– Check gear oil level in front final drive ⇒ page 155 .

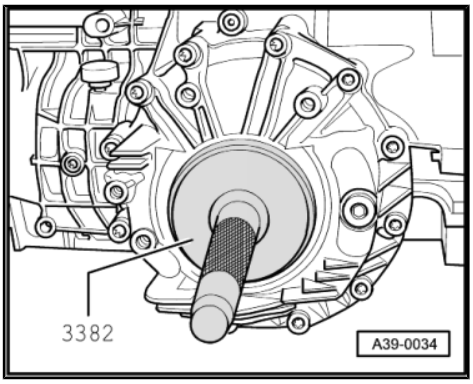

2.6 Removing and installing cover for front axle drive

Special tools and workshop equipment required

- Engine and gearbox jack -V.A.G 1383 A-

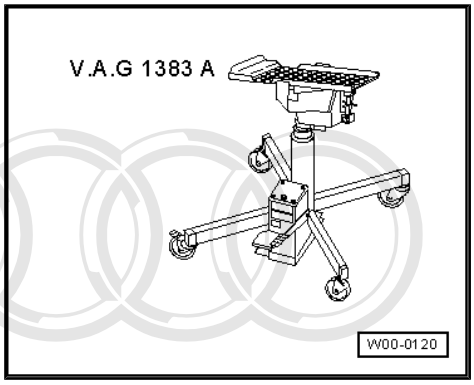

Removing

Note

- *General repair instructions ⇒ page 16 .*
- *Observe rules for cleanliness when working on automatic gearbox ⇒ page 19 .*

Protected by copyright. Copying for private or commercial purposes, in part or in whole, is not permitted unless authorised by AUDI AG. AUDI AG does not guarantee or accept any liability with respect to the correctness of information in this document. Copyright by AUDI AG.

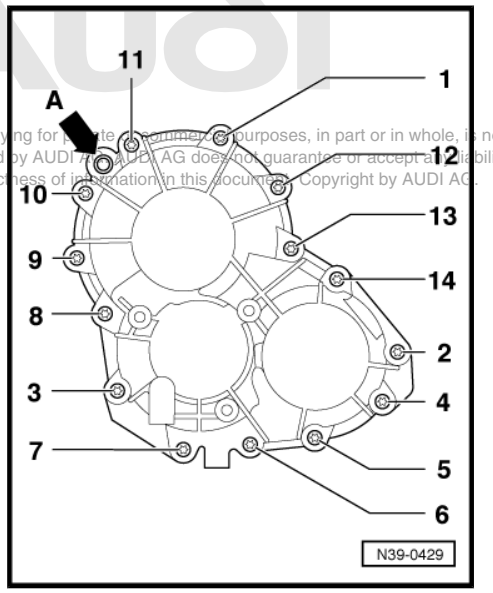

- Vehicles with 6-cylinder petrol engine: remove front exhaust pipe (right-side) ⇒ Rep. Gr. 26 .
- Unbolt heat shield for selector lever cable on left of gearbox.
- Slacken bolts on cover for front axle drive in the sequence -14 ... 1- and remove bolts.
- Place engine and gearbox jack -V.A.G 1383 A- underneath.

Caution

- *Detach cover for front axle drive from gearbox housing slowly and carefully. Otherwise spur gears could drop out of gearbox.*
- *Spur gears which have been dropped on the floor must not be used again. If this happens, the gearbox must be renewed.*

- Lift off cover for front axle drive.

Caution

Do not remove the spur gears for the front axle drive. Secure the spur gears to prevent them from falling out.

– If it is necessary to remove spur gears, mark installation position of intermediate pinion -1- and pinion gear -3-.

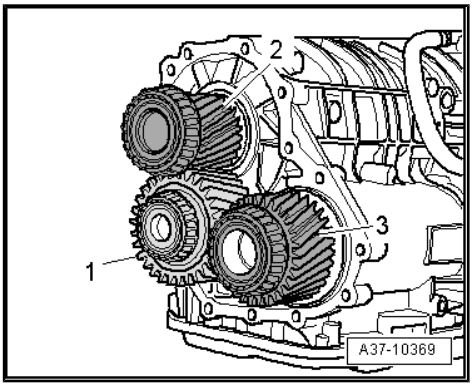

Note

The intermediate pinion and pinion gear are symmetrical. However, they must be re-fitted in the same position to make sure the direction of rotation is maintained.

Installing

Installation is carried out in reverse sequence; note the following:

– Check that dowel sleeve -A- is fitted in cover for front axle drive.

– Fit new gasket.

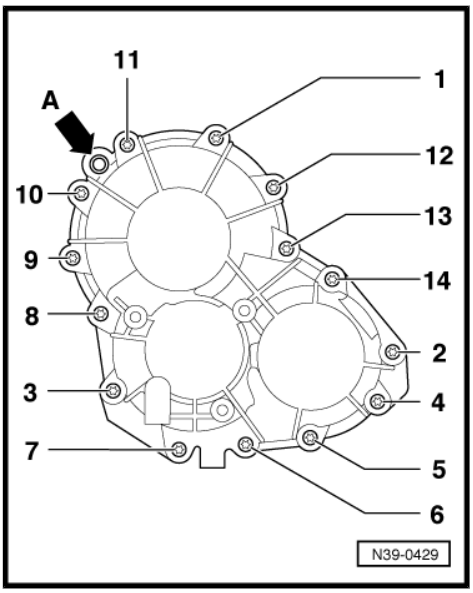

Note

Before attaching the gasket, apply a thin coating of gear oil to the sealing surface to prevent it from slipping.

– Fit cover for front axle drive.

– Tighten bolts in two stages as follows:

1. Fit bolts -1 … 3- and screw in hand-tight, ensuring that the gap between the cover for the front axle drive and the gearbox housing is reduced evenly all round.

2. Tighten bolts in sequence -1 … 14-.

– Check and top up ATF level in planetary gearbox ⇒ page 76 .

Tightening torque

Component	Nm
Cover for front axle drive to gearbox housing	23

2.7 Removing and installing intermediate flange for front axle drive

Special tools and workshop equipment required

♦ Engine and gearbox jack -V.A.G 1383 A-

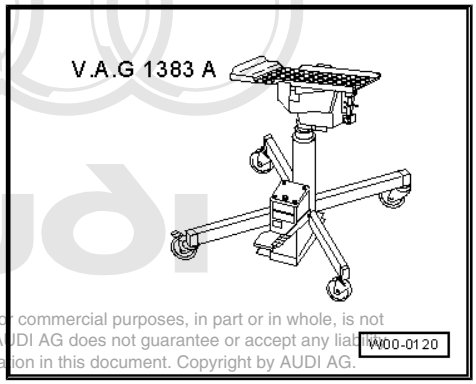

Protected by copyright. Copying for private or commercial purposes, in part or in whole, is not permitted unless authorised by AUDI AG. AUDI AG does not guarantee or accept any liability with respect to the correctness of information in this document. Copyright by AUDI AG.

Removing

Note

- *General repair instructions ⇒ page 16 .*
- *Observe rules for cleanliness when working on automatic gearbox ⇒ page 19 .*

– If fitted, remove heat shield for selector lever cable on left of gearbox.

– Remove transfer box ⇒ page 181 .

– Remove bolts -arrows- on intermediate flange for front axle drive in diagonal sequence.

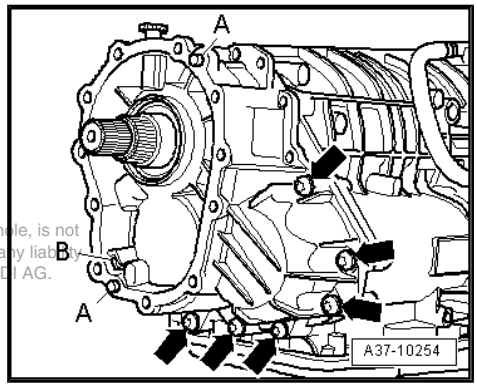

Caution

- ***Remove the intermediate flange for front axle drive from the gearbox housing slowly and carefully. Otherwise spur gears could drop out of gearbox.***
- ***Spur gears which have been dropped on the floor must not be used again. If this happens, the gearbox must be renewed.***

Reproduction of this document or parts thereof in any form or by any process, in part or in whole, is not permitted without the express consent of AUDI AG. AUDI AG does not guarantee or accept any liability with respect to the correctness of information in this document. Copyright by AUDI AG.

– Lift off intermediate flange for front axle drive.

Caution

Do not remove the spur gears for the front axle drive. Secure the spur gears to prevent them from falling out.

– If it is necessary to remove spur gears, mark installation position of intermediate pinion -1- and pinion gear -3-.

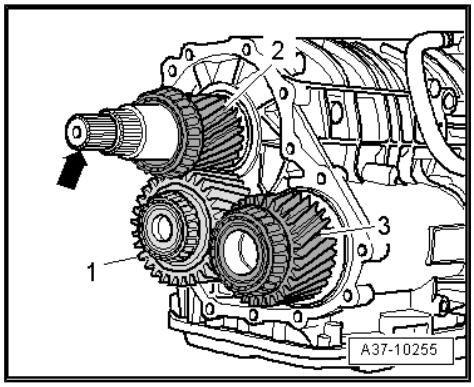

Note

- *The intermediate pinion and pinion gear are symmetrical. However, they must be re-fitted in the same position to make sure the direction of rotation is maintained.*
- *-Arrow- can be disregarded.*

Installing

Installation is carried out in reverse sequence; note the following:

– Check that dowel sleeve -A- is fitted in intermediate flange for front axle drive.

– Fit new gasket.

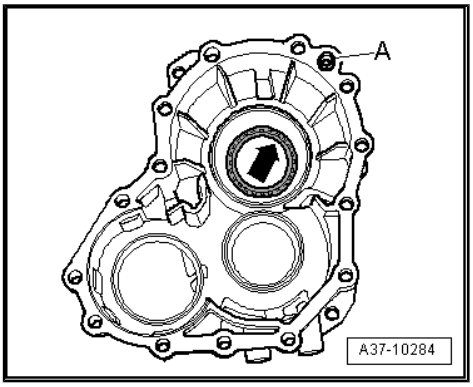

Note

Before attaching the gasket, apply a thin coating of gear oil to the sealing surface to prevent it from slipping.

– Carefully place intermediate flange for front axle drive in position.

Caution

Fitting the intermediate flange for the front axle drive onto the input shaft without sufficient care can damage the sealing lips of the oil seal -arrow-.

– Tighten bolts securing intermediate flange for front axle drive in two stages as follows:

1. Fit bolts -arrows- in diagonal sequence hand-tight, ensuring that the gap between the intermediate flange for the front axle drive and the gearbox housing is reduced evenly all round.

2. Tighten bolts in diagonal sequence.

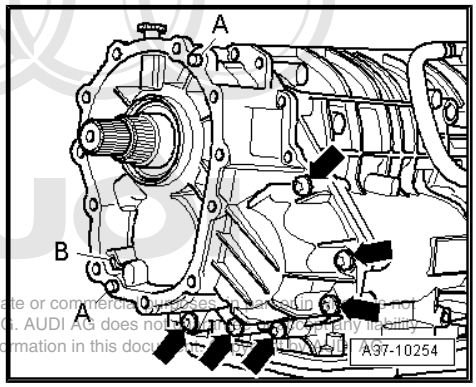

– Install transfer box ⇒ page 181 .

– Check and top up ATF level in planetary gearbox ⇒ page 76.

Protected by copyright. Copying for private or commercial purposes, in part or in whole, is not permitted unless authorised by AUDI AG. AUDI AG does not guarantee or assume any liability with respect to the correctness of information in this document.

Tightening torque

Component	Nm
Intermediate flange for front axle drive to gearbox housing	23

2.8 Renewing twin-lip oil seal between final drive and gearbox housing

Note

- *A defective twin-lip oil seal will allow ATF or gear oil to escape into the torque converter bellhousing via the oil escape hole -arrow-.*
- *A damaged twin-lip oil seal may also allow ATF to enter the differential. This then becomes overfilled and oil will escape at the differential breather.*

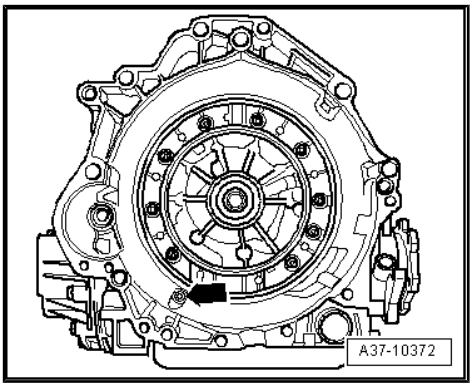

Special tools and workshop equipment required

- Oil seal extractor lever -VW 681-
- Drift -3383-
- Used oil collection and extraction unit -V.A.G 1782-

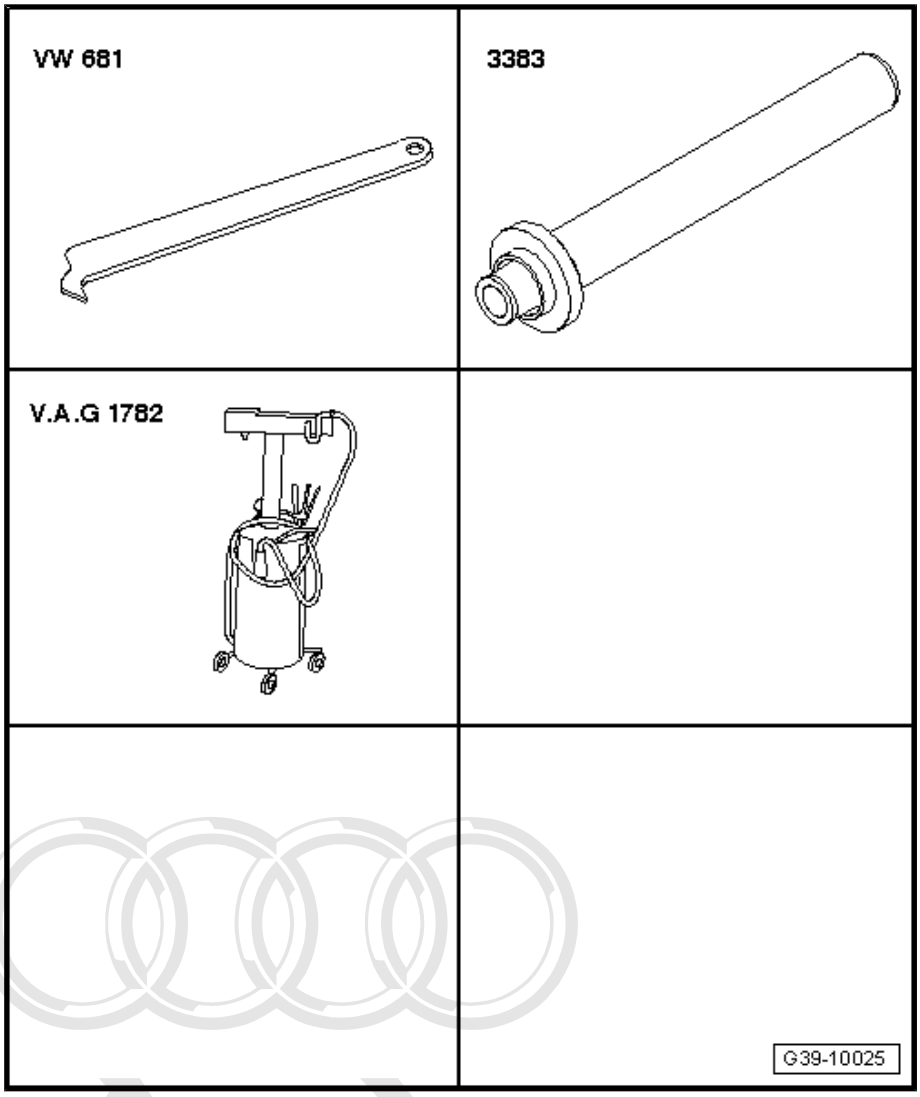

Procedure

– Unscrew heat shield -arrows- for drive shaft (left and – if fitted – right).

Protected by copyright. Copying for private or commercial purposes, in part or in whole, is not permitted unless authorised by AUDI AG. AUDI AG does not guarantee or accept any liability with respect to the correctness of information in this document. Copyright by AUDI AG.

– Unbolt drive shafts (left and right) from gearbox flange shafts ⇒ Rep. Gr. 40 .

– Remove flange shaft (right-side) ⇒ page 161 .

– Remove gearbox support (right-side) ⇒ page 73 .

– Remove cover for final drive ⇒ page 174 .

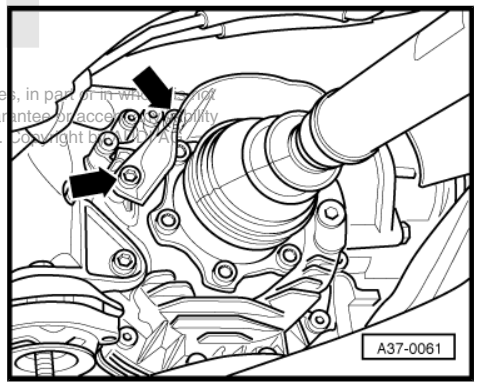

– Pull out differential -arrow- and detach.

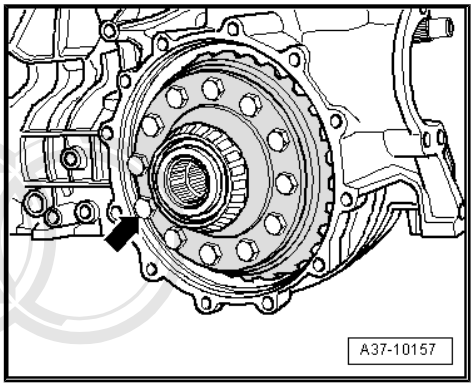

– Remove tapered roller bearing outer race -1- for differential and shim -2- (behind outer race) from gearbox housing by hand.

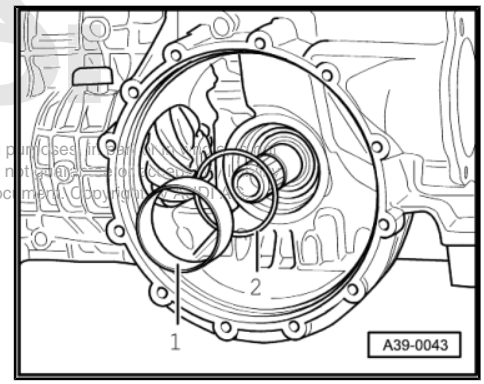

Caution

Protected by copyright. Copying for private or commercial purposes, in part or in whole, is not permitted unless authorised by AUDI AG. AUDI AG does not guarantee or assume liability with respect to the correctness of information in this document. Copyright by AUDI AG.

- *The outer race for the tapered roller bearing must be re-installed in the same position.*
- *Thickness of shim has been measured to fit; the shim must not be replaced with another shim of different thickness.*

– Remove flange shaft (left-side) ⇒ page 163 .

– Use oil seal extractor lever -VW 681- to extract twin-lip oil seal between final drive and gearbox housing.

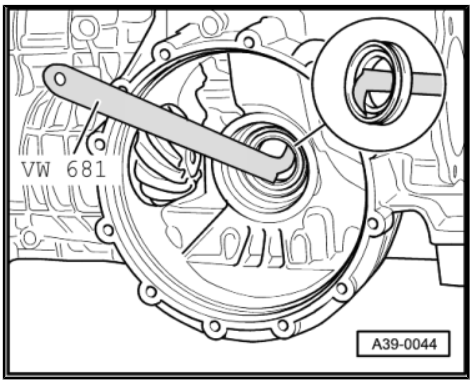

Note

The oil seal extractor lever must be applied behind the two sealing lips of the twin-lip oil seal. Do not position at outer ring of twin-lip oil seal as the contact surface in the gearbox housing could be damaged. Guide the lever carefully when removing the seal.

– Check seat of twin-lip oil seal in gearbox housing for damage and rework if necessary.

– Clean seat of twin-lip oil seal.

– Lightly lubricate outer circumference and sealing lips of new twin-lip oil seal with gear oil.

– Slide twin-lip oil seal onto drift -3383- with protruding sealing lip -arrow- on twin-lip oil seal facing towards drift.

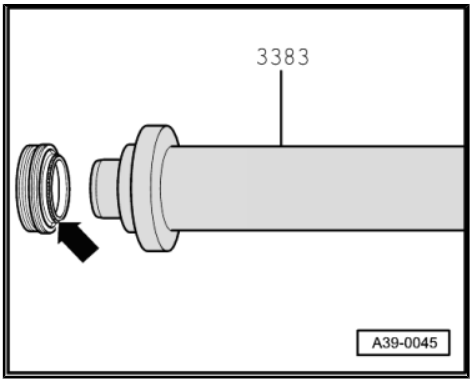

– Drive in twin-lip oil seal as far as stop.

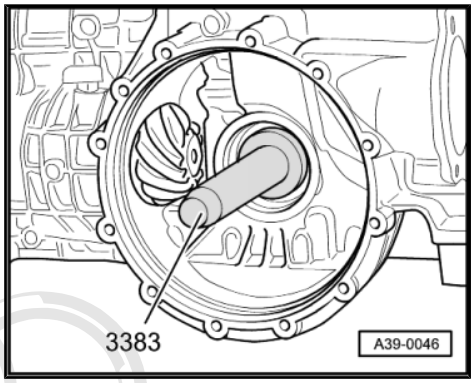

– Insert shim -2- and tapered roller bearing outer race -1- for differential onto stop in gearbox housing by hand.
– Fit differential into gearbox housing.
– Fit cover for final drive ⇒ page 174 .
– Install gearbox support (right-side) ⇒ page 73 .
– Install flange shafts: left-side ⇒ page 159 , right-side ⇒ page 161 .
– Bolt drive shafts (left and right) onto gearbox flange shafts ⇒ Rep. Gr. 40 .
– Fill front final drive with gear oil and check oil level ⇒ page 155 .

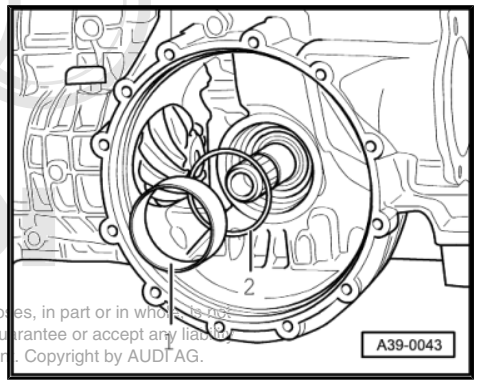

Protected by copyright. Copying for private or commercial purposes, in part or in whole, is not permitted unless authorised by AUDI AG. AUDI AG does not guarantee or accept any liability with respect to the correctness of information in this document. Copyright by AUDI AG.

Tightening torque

Component	Nm
Heat shield for drive shaft to gearbox	23

2.9 Removing and installing cover for final drive

Removing

Note

- *General repair instructions ⇒ page 16 .*
- *Observe rules for cleanliness when working on automatic gearbox ⇒ page 19 .*

Vehicles with petrol engine:

– Remove front exhaust pipe (right side) ⇒ Rep. Gr. 26 .
– Unbolt heat shield for right-side drive shaft -arrows-.

All models:

– Unbolt drive shaft (right side) from gearbox flange shaft ⇒ Rep. Gr. 40 .
– Remove flange shaft (right-side) ⇒ page 161 .
– Remove gearbox support (right-side) ⇒ page 73 .

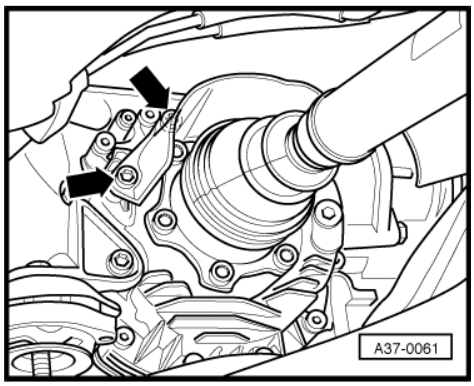

– Slacken bolts on cover for final drive in the sequence -12 ... 1- and remove bolts.

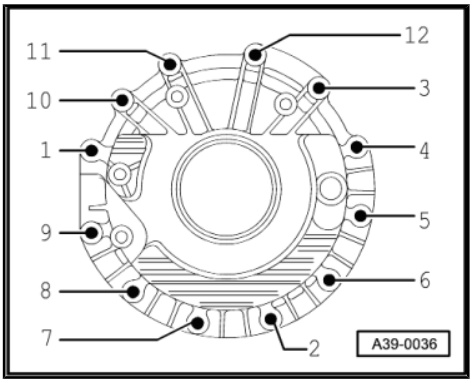

Caution

- *Detach cover for final drive from gearbox housing slowly and carefully. The differential may otherwise fall out of the gearbox.*
- *A differential which has fallen to the ground can no longer be installed. Renew gearbox if differential has fallen to the ground.*

– Remove cover for final drive.

Caution

- *Take care that the outer race for the tapered roller bearing or the shim for the differential does not fall out of the final drive cover.*
- *The outer race for the tapered roller bearing must be re-installed in the same position.*
- *Thickness of shim has been measured to fit; the shim must not be replaced with another shim of different thickness.*

– Remove O-ring -arrow- from cover for final drive.

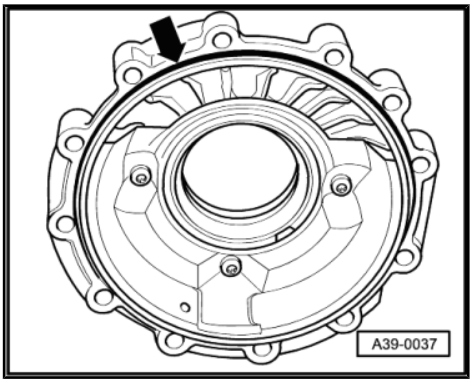

Protected by copyright. Copying for private or commercial purposes, in part or in whole, is not permitted unless authorised by AUDI AG. AUDI AG does not guarantee or accept any liability with respect to the correctness of information in this document. Copyright by AUDI AG.

Installing

Installation is carried out in reverse sequence; note the following:

– Lubricate new O-ring with gear oil.

– Tighten bolts securing cover for final drive in two stages as follows:

1. Hand-tighten bolts -1 … 3-.
2. Tighten bolts in sequence -1 … 12-.

– Install flange shaft (right-side) ⇒ page 161 .

– Bolt drive shaft (right-side) to gearbox flange ⇒ Rep. Gr. 40 .

– Install heat shield for drive shaft (right-side).

– Install gearbox support (right-side) ⇒ page 73 .

Vehicles with petrol engine:

– Install front exhaust pipe (right-side) ⇒ Rep. Gr. 26 .

All models:

– Check gear oil level in front final drive ⇒ page 155 .

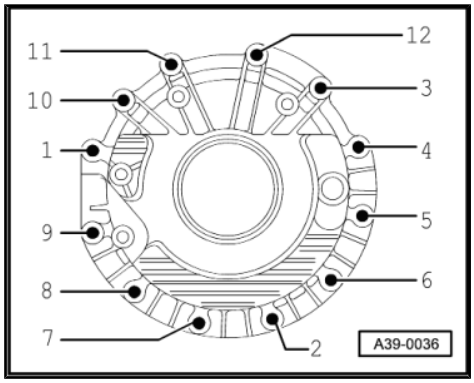

Tightening torques

Component	Nm
Cover for final drive to gearbox housing	23
Heat shield for drive shaft to gearbox	23

Protected by copyright. Copying for private or commercial purposes, in part or in whole, is not permitted unless authorised by AUDI AG. AUDI AG does not guarantee or accept any liability with respect to the correctness of information in this document. Copyright by AUDI AG.

3 Gear oil in transfer box

3.1 Checking gear oil level in transfer box

Special tools and workshop equipment required

- Used oil collection and extraction unit -V.A.G 1782-

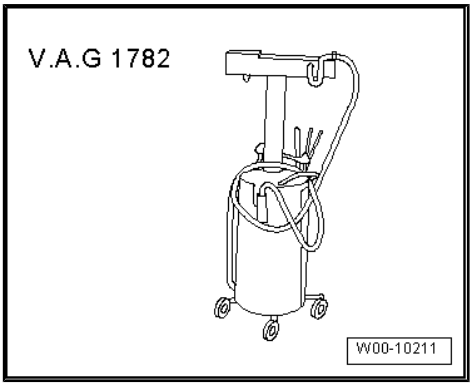

- Safety goggles

Procedure

Note

- *General repair instructions ⇒ page 16 .*
- *Observe rules for cleanliness when working on automatic gearbox ⇒ page 19 .*

– Drive vehicle onto a lifting platform or over an inspection pit in order for it to be absolutely horizontal.

Vehicles with 8-cyl. engine:

– Remove front exhaust pipe (left-side) with catalytic converter ⇒ Rep. Gr. 26 .

All models:

– Place used oil collection and extraction unit -V.A.G 1782- below gearbox.

Protected by copyright. Copying for private or commercial purposes, in part or in whole, is not permitted unless authorised by AUDI AG. AUDI AG does not guarantee or accept any liability with respect to the correctness of information in this document. Copyright by AUDI AG.

WARNING

Wear safety goggles.

– Remove oil filler plug -arrow B-.

• Specification: oil level up to bottom lip of filler hole

– Top up with gear oil if necessary; specification ⇒ page 11 .

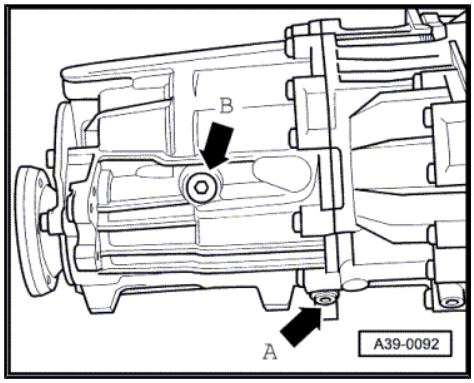

Note

The screw plug with seal must be renewed.

– Tighten new oil filler plug.

Vehicles with 8-cyl. engine:

– Install front exhaust pipe (left-side) with catalytic converter ⇒ Rep. Gr. 26 .

Tightening torque

Component	Nm
Oil filler plug	35

3.2 Changing gear oil in transfer box and filling up after repairs

Special tools and workshop equipment required

♦ Used oil collection and extraction unit -V.A.G 1782-

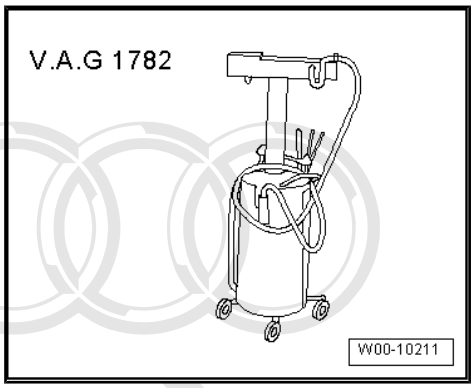

♦ Safety goggles

Draining gear oil

Protected by copyright. Copying for private or commercial purposes, in part or in whole, is not permitted unless authorised by AUDI AG. AUDI AG does not guarantee or accept any liability with respect to the correctness of information in this document. Copyright by AUDI AG.

Note

♦ *General repair instructions* *⇒ page 16* .

♦ *Observe rules for cleanliness when working on automatic gearbox* *⇒ page 19* .

Vehicles with 8-cyl. engine:

– Remove front exhaust pipe (left-side) with catalytic converter ⇒ Rep. Gr. 26 .

All models:

– Place used oil collection and extraction unit -V.A.G 1782- below gearbox.

> ⚠ **WARNING**
>
> *Wear safety goggles.*

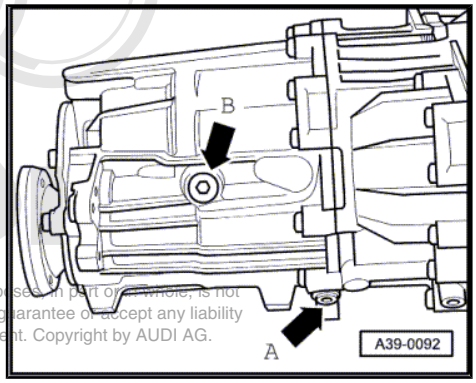

– Remove oil drain plug -arrow A- and allow gear oil to drain off.

Protected by copyright. Copying for private or commercial purposes, in part or in whole, is not permitted unless authorized by AUDI AG. AUDI AG does not guarantee or accept any liability with respect to the correctness of information in this document. Copyright by AUDI AG.

Note

The oil drain plug with seal must be renewed.

– Tighten new oil drain plug.

Filling up with gear oil (transfer box has not been removed)

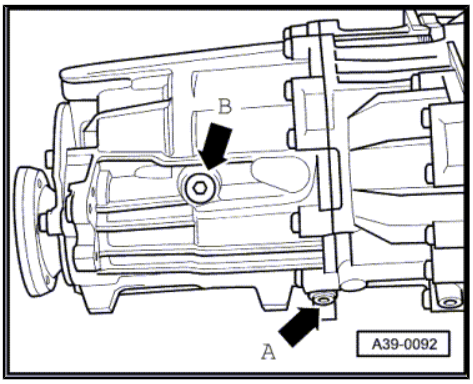

– Remove oil filler plug -arrow B-.

– Fill gear oil up to bottom lip of oil filler hole. Specification and quantity ⇒ page 10 .

– Fit old screw plug.

Note

On vehicles with 8-cylinder engine, the front exhaust pipe must be installed for the road test, and then removed again in order to check the gear oil level afterwards.

– Road-test vehicle for 15 minutes.

Note

During the road test the gear oil will enter the Torsen differential; the oil level in the transfer box housing will drop accordingly.

– Fill transfer box with gear oil and check oil level ⇒ page 177 .

Transfer box has been removed and dismantled

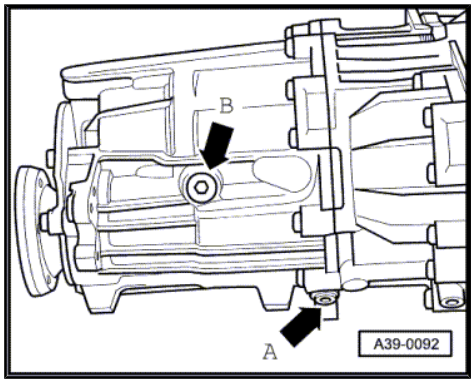

- Put 200 ml of gear oil into Torsen differential.
- Assemble and install transfer box ⇒ page 181 .
- Remove oil filler plug -arrow B-.
- Put 600 ml of gear oil into transfer box housing.

Note

The screw plug with seal must be renewed.

Protected by copyright. Copying for private or commercial purposes, in part or in whole, is not permitted unless authorised by AUDI AG. AUDI AG does not guarantee or accept any liability with respect to the correctness of information in this document. Copyright by AUDI AG.

- Tighten new oil filler plug.

Note

The level does not need to be re-checked after this step.

Tightening torques

Component	Nm
Oil drain plug	20
Oil filler plug	35

4 Servicing front axle drive and transfer box

4.1 Removing and installing transfer box with Torsen differential

Removing

Vehicles with 6-cyl. petrol engine:

– Remove front exhaust pipes (left and right) with catalytic converters ⇒ Rep. Gr. 26 .

Vehicles with 6-cylinder TDI engine or 8-cylinder engine:

– Remove front exhaust pipe (left-side) with catalytic converter ⇒ Rep. Gr. 26 .

All models:

– Remove heat shield for propshaft from cover for Torsen differential -arrows-.

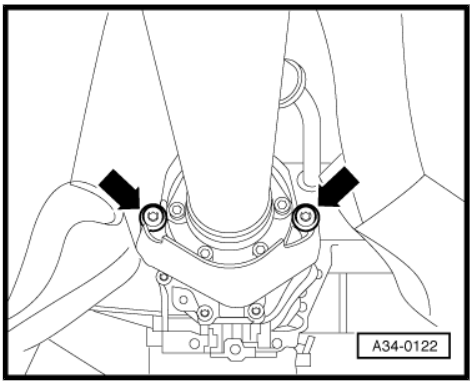

Note

Before removing propshaft, mark position of constant velocity joint of propshaft in relation to output flange at transfer box to facilitate re-installation.

– Detach propshaft from transfer box and place on heat shield.

– Drain off gear oil from transfer box ⇒ page 178 .

– Slacken bolts -arrows- on transfer box housing in diagonal sequence and remove bolts.

Protected by copyright. Copying for private or commercial purposes, in part or in whole, is not permitted unless authorised by AUDI AG. AUDI AG does not guarantee or accept any liability with respect to the correctness of information in this document. Copyright by AUDI AG.

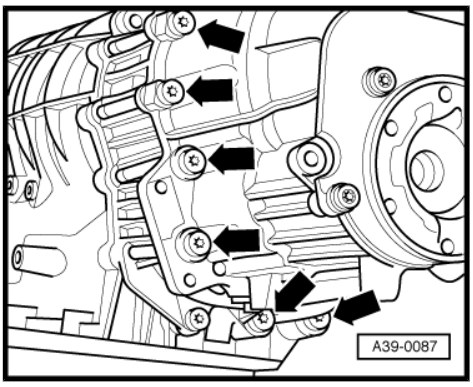

Caution

Detach transfer box housing from gearbox carefully towards the rear. The Torsen differential may otherwise fall out of the gearbox.

– Pull Torsen differential -arrow- off output shaft.

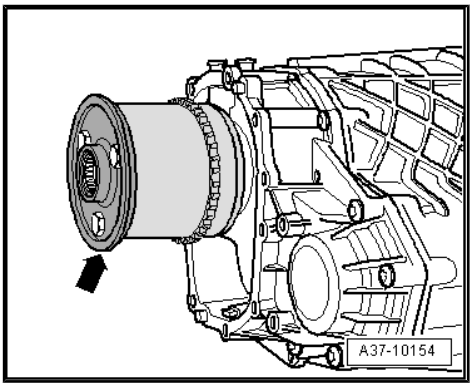

Installing

Installation is carried out in reverse sequence; note the following:

– Check that dowel sleeves -arrow A- and -arrow B- are fitted in intermediate flange for front axle drive.

– Apply a thin coating of gear oil to sealing surface -D- (to prevent gasket from slipping) and place gasket in position.

– Clean magnet and insert it in chamber -1- in intermediate flange for front axle drive.

– Put 200 ml of gear oil into Torsen differential ⇒ page 180 .

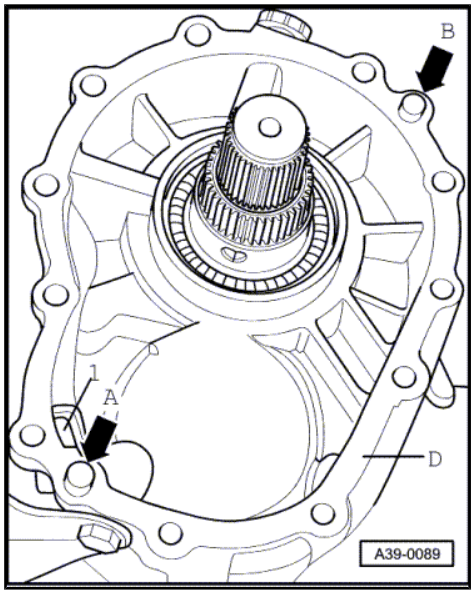

– Fit Torsen differential -arrow- on splines of output shaft and lowest spur gear, turning it slightly at the same time.

– Check whether the attached Torsen differential can be turned manually.

This document is protected by copyright. Reproduction or transmission in whole is not permitted unless authorised by AUDI AG. AUDI AG does not guarantee or accept any liability with respect to the correctness of information in this document. Copyright by AUDI AG.

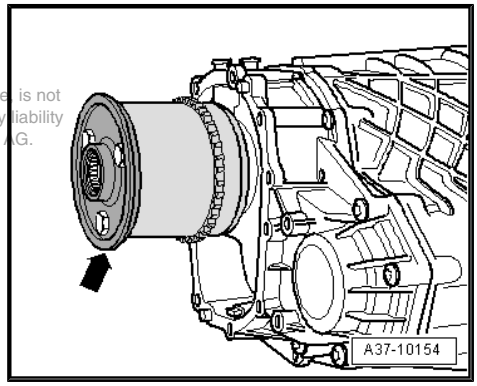

– Position transfer box housing at rear of gearbox with spur gears and output flange fitted.

– Insert bolts -arrows- on transfer box housing and tighten in diagonal sequence.

– Secure propshaft to transfer box ⇒ page 186 .

– Fill transfer box with gear oil and check oil level ⇒ page 177 .

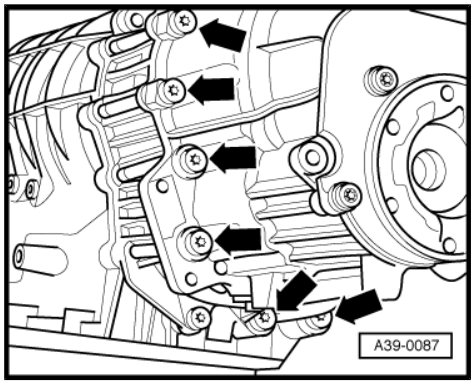

Tightening torques

Component	Nm
Transfer box housing to gearbox housing	23
Heat shield for propshaft to gearbox	23

4.2 Dismantling and assembling front axle drive and transfer box

Dismantling and assembling front axle drive and transfer box ⇒ Servicing automatic gearbox 01V, front-wheel drive and four-wheel drive; Rep. Gr. 39 .

The components of the front axle drive and transfer box can be removed without removing the gearbox from the vehicle.

4.3 Renewing oil seal for output flange for propshaft

Special tools and workshop equipment required

♦ Thrust piece -3402-

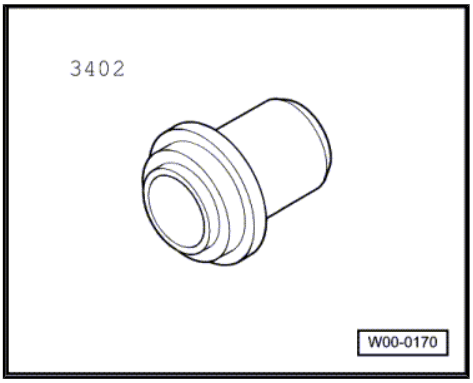

Procedure

- Gearbox installed

Vehicles with 6-cyl. petrol engine:

– Remove front exhaust pipes (left and right) with catalytic converters ⇒ Rep. Gr. 26 .

Vehicles with 6-cylinder TDI engine or 8-cylinder engine:

– Remove front exhaust pipe (left-side) with catalytic converter ⇒ Rep. Gr. 26 .

All models:

– Remove heat shield for propshaft from cover for Torsen differential -arrows-.

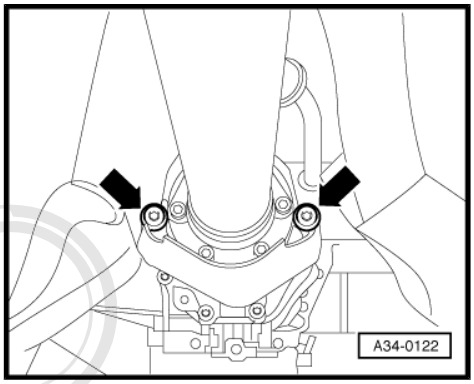

Note

Before removing propshaft, mark position of constant velocity joint of propshaft in relation to output flange at transfer box to facilitate re-installation.

– Detach propshaft from transfer box and place on heat shield.

– Drain off gear oil from transfer box ⇒ page 178 .

– Unbolt output flange (use drift to prevent output flange from turning).

– Pull out output flange.

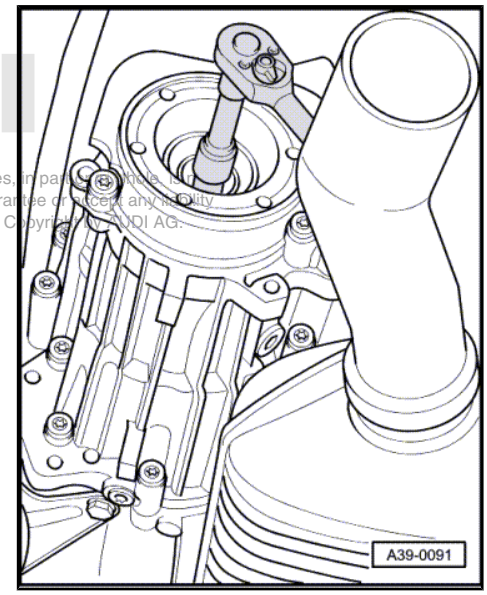

Protected by copyright. Copying for private or commercial purposes, in part or in whole, is not permitted unless authorised by AUDI AG. AUDI AG does not guarantee or accept any liability with respect to the correctness of information in this document. Copyright © AUDI AG.

– Pry out oil seal using screwdriver.
– Clean seat of oil seal.

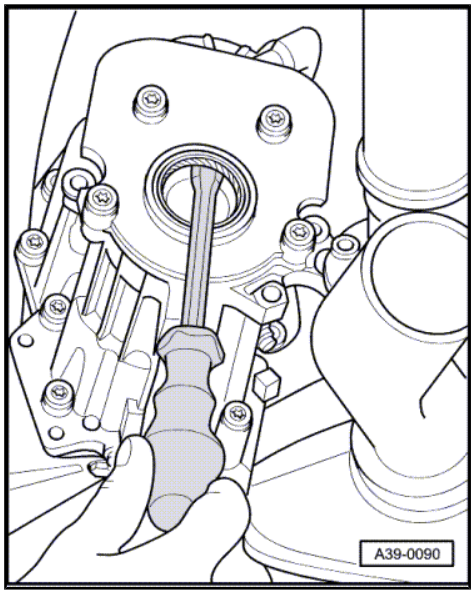

– Lightly lubricate outer circumference of new oil seal with gear oil.
– Use thrust piece -3402- to drive home oil seal.
– Secure output flange for propshaft.
– Secure propshaft to transfer box ⇒ page 186 .
– Fill up transfer box with gear oil and check ⇒ page 178 .

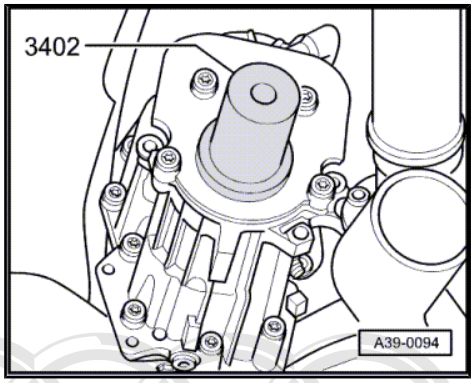

Vehicles with 6-cyl. petrol engine:

– Install front exhaust pipes (left and right) with catalytic converters ⇒ Rep. Gr. 26 .

Vehicles with 6-cylinder TDI engine or 8-cylinder engine:

– Install front exhaust pipe (left-side) with catalytic converter ⇒ Rep. Gr. 26 .

Tightening torques

Component	Nm
Hexagon socket head bolt for output flange (rear)	25
Heat shield for propshaft to Torsen differential	23

4.4 Renewing oil seal in intermediate flange for front axle drive

Copyright. Copying for private or commercial purposes, in part or in whole, is not permitted unless authorised by AUDI AG. AUDI AG does not guarantee or accept any liability with respect to the correctness of information in this document. Copyright by AUDI AG.

Renewing oil seal in intermediate flange for front axle drive ⇒ Servicing automatic gearbox 01V, front-wheel drive and four-wheel drive; Rep. Gr. 39 .

4.5 Renewing oil seal in input pinion

Renewing oil seal in input pinion ⇒ Servicing automatic gearbox 01V, front-wheel drive and four-wheel drive; Rep. Gr. 39 .

4.6 Renewing needle bearing for spur gear 2

Renewing needle bearing for spur gear 2 ⇒ Servicing automatic gearbox 01V, front-wheel drive and four-wheel drive; Rep. Gr. 39 .

5 Servicing propshaft

Note

- *General repair instructions* *⇒ page 16* *.*
- *Avoid bending propshaft to prevent damage to universal joint (maximum bending angle of universal joint is 25°).*
- *The propshaft must be kept straight when it is stored or transported.*
- *No repair work can be carried out on the propshaft with the exception of removing, installing and adjusting.*
- *If the propshaft is detached only at the gearbox or at the rear final drive, it must be tied up or supported at the constant velocity joints.*
- *Before detaching the propshaft, mark the position of the constant velocity joint in relation to the flange. Reinstall in the same position to avoid excessive imbalance, resulting in bearing damage and rumbling noise.*
- *In the event of complaints (noise, vibration), always check whether precise adjustment can cure the problem before renewing the propshaft.*
- *After detaching the propshaft from the rear final drive, the additional balancing washer (thicker washer) that may be fitted between the lock plate and one of the bolt heads must not be reinstalled.*

Protected by copyright. Copying for private or commercial purposes, in part or in whole, is not permitted unless authorised by AUDI AG. AUDI AG does not guarantee or accept any liability with respect to the correctness of information in this document. Copyright by AUDI AG.

5.1 Propshaft - exploded view of components

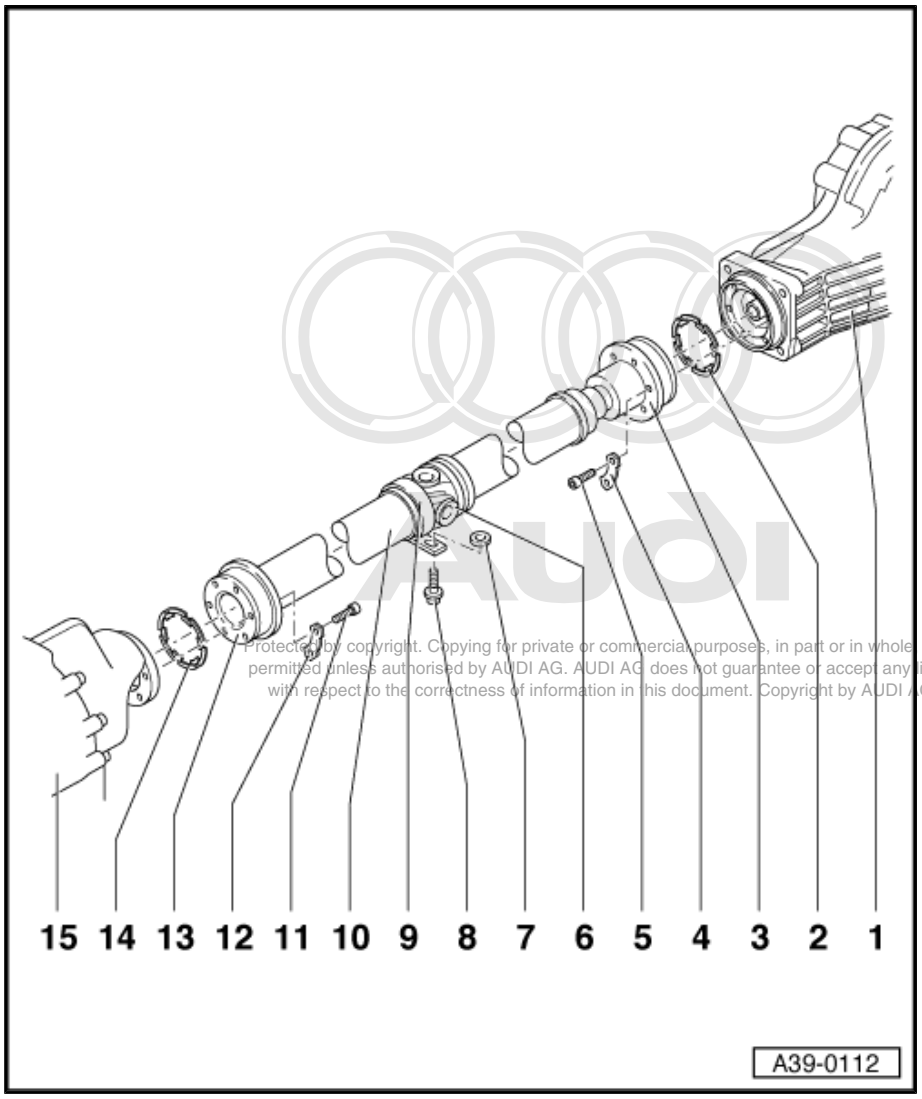

Protected by copyright. Copying for private or commercial purposes, in part or in whole, is not permitted unless authorised by AUDI AG. AUDI AG does not guarantee or accept any liability with respect to the correctness of information in this document. Copyright by AUDI AG.

1 - Rear final drive

2 - Gasket

- ❑ Renew
- ❑ Detach protective foil and stick self-adhesive side of the gasket onto flange for propshaft. Bonding surface must be free from grease

3 - Constant velocity joint

- ❑ Max. permissible bending angle 8°

4 - Lock plate

5 - Hexagon socket head bolt, 55 Nm

- ❑ Self-locking
- ❑ Renew
- ❑ Tapped holes for bolts in flange shafts must be cleaned (e.g. with a thread cutter)

6 - Universal joint

- ❑ Max. permissible bending angle 25°

7 - Shims

- ❑ Determining thickness ⇒ page 192

8 - Hexagon bolt, 23 Nm

9 - Centre propshaft bearing

10 - Propshaft

- ❑ Adjusting ⇒ page 190

11 - Hexagon socket head bolt, 55 Nm

- ❑ Self-locking
- ❑ Renew
- ❑ Tapped holes for bolts in flange shafts must be cleaned (e.g. with a thread cutter)

12 - Lock plate

13 - Constant velocity joint

- ❑ Max. permissible bending angle 8°

14 - Gasket

- ❑ Renew
- ❑ Detach protective foil and stick self-adhesive side of the gasket onto output flange for propshaft. Bonding surface must be free from grease

15 - Transfer box

5.2 Removing and installing propshaft

Special tools and workshop equipment required

♦ Assembly tool -3139-

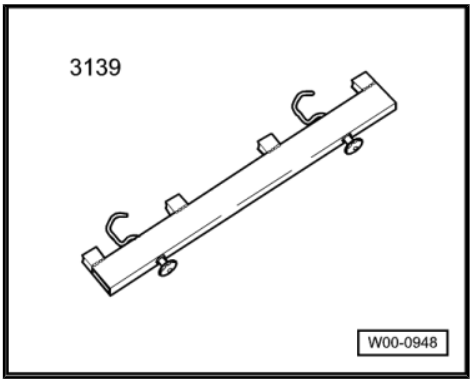

♦ Spacers -3139/3-

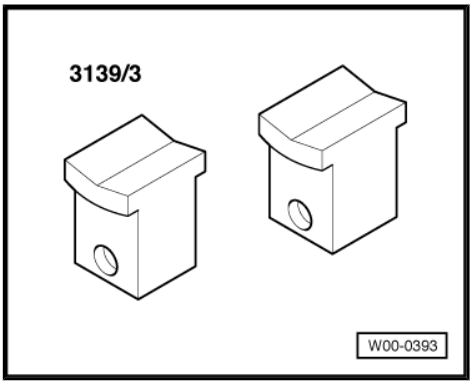

Removing

> ⚠ Caution
>
> *Contact corrosion! Notes ⇒ page 16 .*

– Observe notes ⇒ page 185 .
– If fitted, remove cross member -arrows-.
– Loosen clamps -2-.
– Detach rear section of exhaust system -1- and remove.

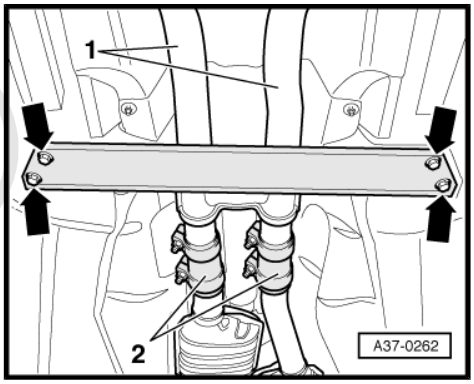

Vehicles with 6-cyl. petrol engine:

– Remove front exhaust pipes (left and right) with catalytic converters ⇒ Rep. Gr. 26 .

Protected by copyright. Copying for private or commercial purposes, in part or in whole, is not permitted unless authorised by AUDI AG. AUDI AG does not guarantee or accept any liability with respect to the correctness of information in this document. Copyright by AUDI AG.

Vehicles with 6-cylinder TDI engine or 8-cylinder engine:

– Remove front exhaust pipe (left-side) with catalytic converter ⇒ Rep. Gr. 26 .

All models:

– Remove heat shields from underneath propshaft -arrows-.

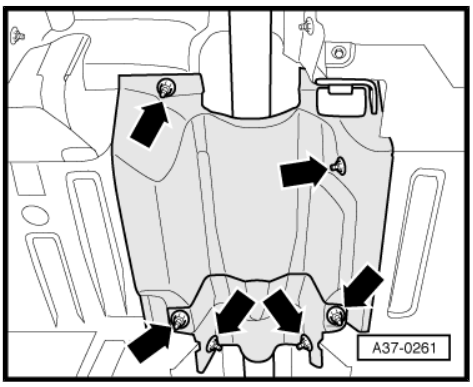

– Remove heat shield for propshaft from cover for Torsen differential -arrows-.

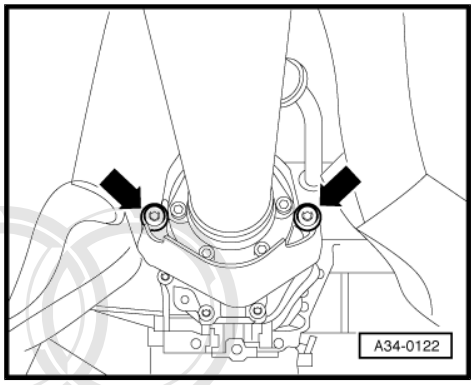

– Remove tunnel support -arrows-.

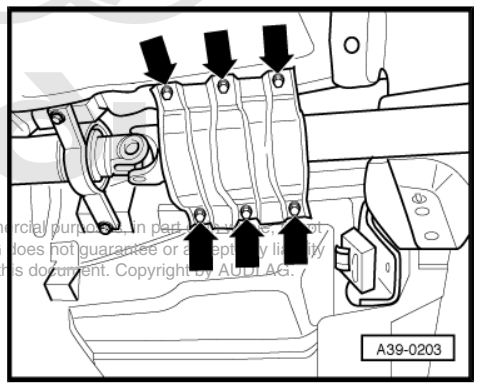

Protected by copyright. Copying for private or commercial purposes, in part or in whole, is not permitted unless authorised by AUDI AG. AUDI AG does not guarantee or accept any liability with respect to the correctness of information in this document. Copyright by AUDI AG.

– Check whether there is a factory marking (coloured dot) on the propshaft. If no factory marking is visible, mark position of constant velocity joint on propshaft -arrow A- in relation to flange for propshaft on rear final drive -arrow B-.

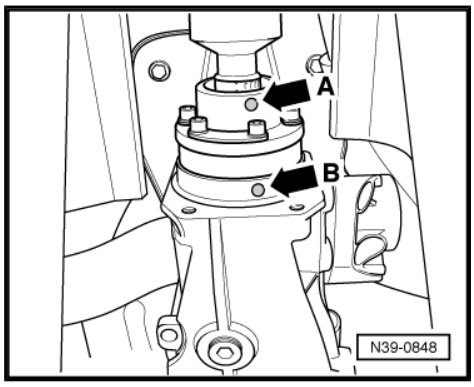

Note

Only mark if same propshaft is to be re-used.

– Slacken bolts securing propshaft at transfer box and at rear final drive but do not remove.

– Slacken bolts securing centre propshaft bearing but do not remove.

– Attach assembly tool -3139- and spacers -3139/3- , and tighten the plastic nuts.

• Do not fit assembly tool onto balance plates.

– Remove bolts from propshaft at transfer box and at rear final drive.

– Slide propshaft together towards rear final drive. The constant velocity joints can be moved axially.

– Unbolt centre propshaft bearing.

– Guide propshaft out towards gearbox together with assembly tool.

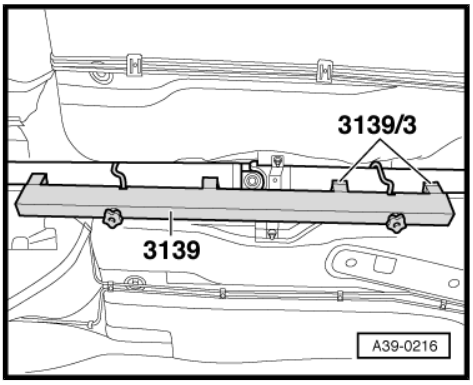

Note

The propshaft must be kept straight when it is stored or transported.

Installing

Installation is carried out in reverse sequence; note the following:

Protected by copyright. Copying for private or commercial purposes, in part or in whole, is not permitted unless authorised by AUDI AG. AUDI AG does not guarantee or accept any liability with respect to the correctness of information in this document. Copyright by AUDI AG.

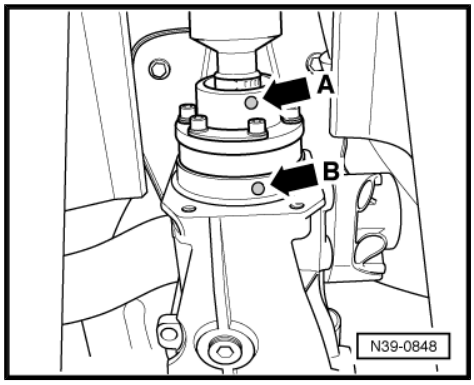

Note

- *Renew propshaft bolts (self-locking).*
- *After detaching the propshaft, it is important to clean out any locking fluid residues from threads in output flange for propshaft and in flange for propshaft on rear final drive. Otherwise there is a danger that the new bolts will seize when they are screwed in and then shear off the next time they are removed. The threads can be cleaned with a thread tap.*
- *Renew gasket at output flange for propshaft and at flange for propshaft on rear final drive (remove backing and stick self-adhesive side of gasket to corresponding flange). Bonding surface must be free from grease.*
- *To prevent imbalance, the propshaft and the flange for the propshaft on the rear final drive must be installed so that the factory markings on the constant velocity joint (or the markings made on removal of the propshaft) -arrow A- are in alignment with the markings on the flange for the propshaft on the rear final drive -arrow B-.*
- *If you are installing a new propshaft and the factory marking is no longer visible on the flange for the propshaft on the rear final drive, the radial run-out must be measured at the flange for the propshaft ⇒ page 111 and the coloured marking on the constant velocity joint on the propshaft must be aligned with the new marking on the flange for the propshaft on the rear final drive.*
- *After detaching the propshaft from the rear final drive, the additional balancing washer (thicker washer) that may be fitted between the lock plate and one of the bolt heads must not be reinstalled.*

– Adjust propshaft after installation ⇒ page 190 .

Tightening torques

Component	Nm
Propshaft to output flange on transfer box	55
Propshaft to flange for propshaft on rear final drive	55
Heat shield for propshaft to cover for Torsen differential	23

5.3 Adjusting propshaft

Protected by copyright. Copying for private or commercial purposes, in part or in whole, is not permitted unless authorised by AUDI AG. AUDI AG does not guarantee or accept any liability with respect to the correctness of information in this document. Copyright by AUDI AG.

Special tools and workshop equipment required

- Assembly tool -3139-

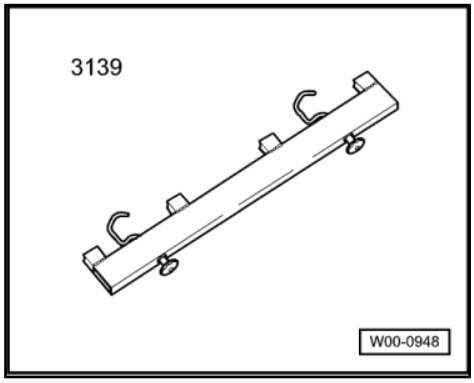

♦ Spacers -3139/3-

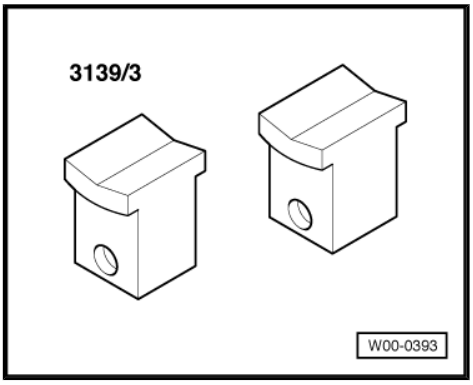

Procedure

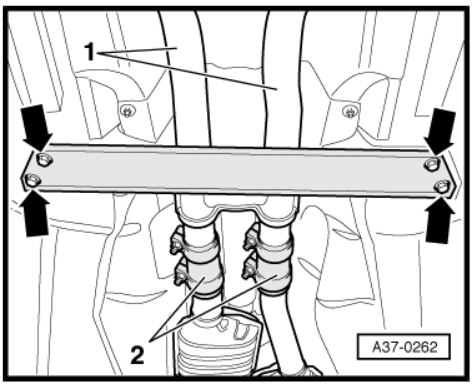

> ⚠ **Caution**
>
> *Contact corrosion! Notes ⇒ page 16 .*

– Observe notes ⇒ page 185 .
– If fitted, remove cross member -arrows-.
– Loosen clamps -2-.
– Detach rear section of exhaust system -1- and remove.

Vehicles with 6-cyl. petrol engine:

– Remove front exhaust pipes (left and right) with catalytic converters ⇒ Rep. Gr. 26 .

Vehicles with 6-cylinder TDI engine or 8-cylinder engine:

– Remove front exhaust pipe (left-side) with catalytic converter ⇒ Rep. Gr. 26 .

All models:

– Remove heat shields from underneath propshaft -arrows-.

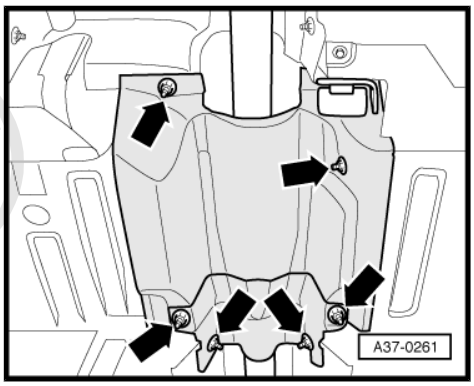

– Remove tunnel support -arrows-.

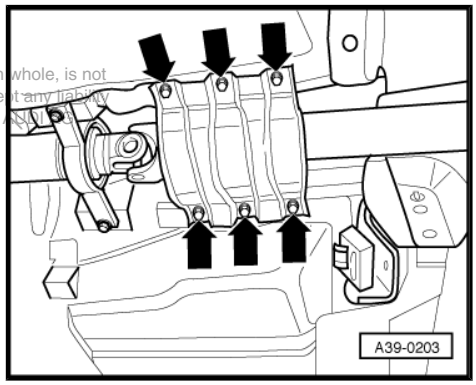

Protected by copyright. Copying for private or commercial purposes, in part or in whole, is not permitted unless authorised by AUDI AG. AUDI AG does not guarantee or accept any liability with respect to the correctness of information in this document. Copyright by AUDI AG.

– Attach assembly tool -3139- and spacers -3139/3- , and tighten the plastic nuts.

• Do not fit assembly tool onto balance plates.

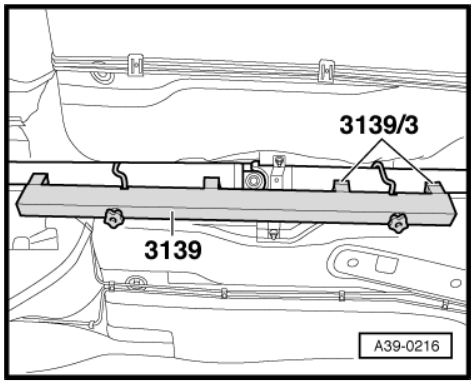

– Remove bolts securing centre propshaft bearing and remove shims.

– Align centre propshaft bearing:

• Distance -a- left = Distance -a- right.

– Select required shim(s) from following table:

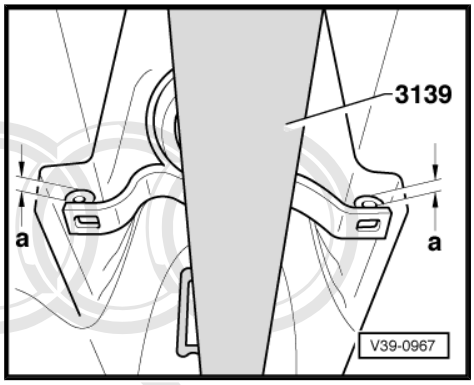

Distance -a- in mm	Shims - Thickness of shims in mm [1]
0 … 3.0	–
3.1 … 5.0	2
5.1 … 7.0	4
7.1 … 9.0	6
9.1 … 11.0	8
11.1 … 13.0	10

• [1] For Part Nos. refer to ⇒ Electronic parts catalogue

Protected by copyright. Copying for private or commercial purposes, in part or in whole, is not permitted unless authorised by AUDI AG. AUDI AG does not guarantee or accept any liability with respect to the correctness of information in this document. Copyright by AUDI AG.

– Fit selected shims on left and right.

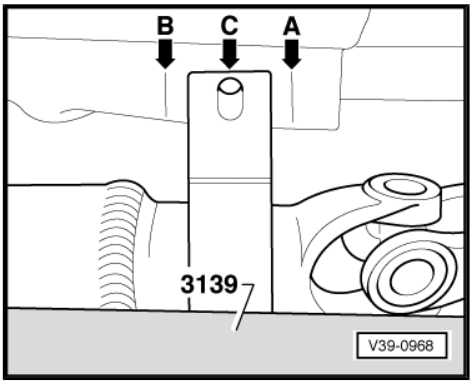

Axial alignment of propshaft

– Push propshaft with assembly tool towards the rear as far as it will go.

– Mark position of centre propshaft bearing in relation to body -arrow A-.

– Then slide propshaft with assembly tool forwards as far as it will go.

– Mark position of centre propshaft bearing in relation to body -arrow B-.

– Align propshaft at centre -arrow C-:

• The centre propshaft bearing must be aligned centrally between the markings -arrow A- and -arrow B-.

– Fit selected shims and tighten bolts of centre propshaft bearing.

Assembling

Installation is carried out in reverse sequence; note the following:

– Remove the assembly tool.

– Fit tunnel support and cross member.

– Fit heat shield underneath propshaft.

Vehicles with 6-cyl. petrol engine:

– Install front exhaust pipes (left and right) with catalytic converters ⇒ Rep. Gr. 26 .

Protected by copyright. Copying for private or commercial purposes, in part or in whole, is not permitted unless authorised by AUDI AG. AUDI AG does not guarantee or accept any liability with respect to the correctness of information in this document. Copyright by AUDI AG.

Vehicles with 6-cylinder TDI engine or 8-cylinder engine:

– Install front exhaust pipe (left-side) with catalytic converter ⇒ Rep. Gr. 26 .

All models:

– Align exhaust system so it is free of stress ⇒ Rep. Gr. 26 .

Component	Nm
Centre propshaft bearing to body	23
Cross member to body	25
Tunnel support to body	25