Workshop Manual

Audi A8 1994 ➤

6-cylinder diesel direct injection engine (TDI), mechanics									
Engine ID	AFB	AKN	AKE						

Edition 09.2008

Protected by copyright. Copying for private or commercial purposes, in part or in whole, is not permitted unless authorised by AUDI AG. AUDI AG does not guarantee or accept any liability with respect to the correctness of information in this document. Copyright by AUDI AG.

List of Workshop Manual Repair GroupsList of Workshop Manual Repair GroupsList of Workshop Manual Repair Groups

Repair Group

00 - Technical data
10 - Removing and installing engine
13 - Crankshaft group
15 - Cylinder head, valve gear
17 - Lubrication
19 - Cooling
21 - Turbocharging/supercharging
26 - Exhaust system

Protected by copyright. Copying for private or commercial purposes, in part or in whole, is not permitted unless authorised by AUDI AG. AUDI AG does not guarantee or accept any liability with respect to the correctness of information in this document. Copyright by AUDI AG.

Technical information should always be available to the foremen and mechanics, because their careful and constant adherence to the instructions is essential to ensure vehicle road-worthiness and safety. In addition, the normal basic safety precautions for working on motor vehicles must, as a matter of course, be observed.

All rights reserved.
No reproduction without prior agreement from publisher.

Copyright © 2010 Audi AG, Ingolstadt

00050807120

Contents

00 - Technical data 1
- 1 Engine number 1
- 2 Engine data 2
- 3 Safety precautions 3
- 4 General repair instructions 4
- 4.1 Rules for cleanliness when working on fuel supply system, injection system and turbocharger 4
- 4.2 Checking for leaks in the fuel system 4
- 4.3 Contact corrosion! 4
- 4.4 Installing radiators, condensers and charge air coolers 5
- 4.5 Checking vacuum system 5
- 4.6 Routing and attachment of pipes, hoses and wiring 5

10 - Removing and installing engine 6
- 1 Removing engine 6
- 2 Securing engine to engine and gearbox support 22
- 3 Installing engine 24

13 - Crankshaft group 30
- 1 Cylinder block (pulley end) 30
- 1.1 Poly V-belt drive for power steering pump, alternator and viscous fan - exploded view . . 30
- 1.2 Removing and installing poly V-belt for power steering pump, alternator and viscous fan 31
- 1.3 Poly V-belt drive for air conditioner compressor - exploded view 35
- 1.4 Removing and installing poly V-belt for A/C compressor 35
- 1.5 Removing and installing vibration damper 38
- 1.6 Bracket for power steering pump and oil cooler - exploded view 39
- 1.7 Removing and installing bracket for power steering pump and oil cooler 40
- 1.8 Removing and installing mounting bushes on bracket for power steering pump and oil cooler 43
- 1.9 Toothed belt drive for camshafts - exploded view 50
- 1.10 Toothed belt drive for injection pump - exploded view 52
- 1.11 Removing toothed belt from camshaft sprockets 53
- 1.12 Removing and installing toothed belt 62
- 2 Sealing flanges and dual-mass flywheel/drive plate 72
- 2.1 Sealing flanges and dual-mass flywheel/drive plate - exploded view 72
- 2.2 Renewing crankshaft oil seal (pulley end) 74
- 2.3 Removing and installing sealing flange (pulley end) 75
- 2.4 Removing and installing dual-mass flywheel - vehicles with manual gearbox 78
- 2.5 Extracting and driving in needle bearing for dual-mass flywheel 79
- 2.6 Removing and installing drive plate - vehicles with automatic gearbox 80
- 3 Crankshaft 82
- 3.1 Crankshaft - exploded view 82
- 3.2 Crankshaft dimensions 84
- 3.3 Measuring axial clearance of crankshaft 84
- 3.4 Measuring radial clearance of crankshaft 85
- 3.5 Removing and installing chain sprocket 86
- 4 Dismantling and assembling pistons and conrods 87
- 4.1 Pistons and conrods - exploded view 87
- 4.2 Measuring piston projection at “TDC” 90
- 4.3 Piston and cylinder dimensions 92
- 4.4 Measuring radial clearance of conrods 93

Protected by copyright. Copying for private or commercial purposes, in part or in whole, is not permitted unless authorised by AUDI AG. AUDI AG does not guarantee or accept any liability with respect to the correctness of information in this document by AUDI AG.

15 - Cylinder head, valve gear . . . 94
1 Cylinder head . . . 94
1.1 Cylinder head - exploded view . . . 94
1.2 Removing and installing intake manifold (front section) . . . 97
1.3 Removing and installing intake manifold (left-side) . . . 98
1.4 Removing and installing intake manifold (right-side) . . . 100
1.5 Removing and installing cylinder head cover (left-side) . . . 102
1.6 Removing and installing cylinder head cover (right-side) . . . 104
1.7 Removing cylinder head (left-side) . . . 108
1.8 Removing cylinder head (right-side) . . . 110
1.9 Installing cylinder head . . . 114
1.10 Checking compression . . . 119
2 Valve gear . . . 122
2.1 Valve gear - exploded view . . . 122
2.2 Checking axial clearance of camshafts . . . 124
2.3 Measuring radial clearance of camshafts . . . 125
2.4 Renewing oil seals for camshafts . . . 125
2.5 Removing and installing camshafts . . . 126
2.6 Removing and installing outer camshaft bearing caps . . . 130
2.7 Checking hydraulic valve compensation elements . . . 131
2.8 Renewing valve stem oil seals with cylinder head installed . . . 133
2.9 Renewing valve stem oil seals with cylinder head removed . . . 136
2.10 Valve dimensions . . . 139
2.11 Checking valve guides . . . 139
2.12 Checking valves . . . 140

17 - Lubrication . . . 141
1 Sump (bottom section), oil pump, sump (top section) . . . 141
1.1 Sump, oil pump - exploded view . . . 142
1.2 Removing sump (bottom section) . . . 144
1.3 Installing sump (bottom section) - engines with moulded gasket . . . 145
1.4 Installing sump (bottom section) - engines with liquid gasket . . . 146
1.5 Removing and installing oil pump . . . 147
1.6 Removing sump (top section) . . . 153
1.7 Installing sump (top section) - engines with moulded gasket . . . 161
1.8 Installing sump (top section) - engines with liquid gasket . . . 162
1.9 Oil filter bracket, oil filter - exploded view . . . 166
1.10 Removing and installing connecting piece with oil separator . . . 167
1.11 Removing and installing oil filter bracket . . . 170
1.12 Renewing oil retention valves . . . 171
1.13 Removing and installing oil cooler . . . 171
2 Engine oil . . . 174
2.1 Checking engine oil level . . . 174
2.2 Checking oil pressure and oil pressure switch . . . 174

19 - Cooling . . . 176
1 Cooling system . . . 176
1.1 Draining and filling cooling system . . . 177
1.2 Coolant pump and thermostat - exploded view . . . 182
1.3 Removing and installing coolant pump . . . 182
1.4 Removing, installing and checking thermostat . . . 183
1.5 Checking thermostat . . . 189
1.6 Coolant pipes - exploded view . . . 190
1.7 Removing and installing coolant pipe (front) . . . 191
1.8 Removing and installing coolant pipe (left-side) . . . 192

Protected by copyright. Copying for private or commercial purposes, in part or in whole, is not permitted unless authorised by AUDI AG. AUDI AG does not guarantee or accept any liability with respect to the correctness of information in this document. Copyright by AUDI AG.

1.9 Removing and installing coolant pipe (right-side) . . . 193
1.10 Removing and installing coolant pipe (centre) . . . 195
1.11 Removing and installing viscous fan . . . 195
1.12 Removing and installing radiator . . . 196
1.13 Checking cooling system for leaks . . . 200

21 - Turbocharging/supercharging . . . 202

1 Charge air system with turbocharger . . . 202
1.1 Hose connection diagram for charge pressure control . . . 202
1.2 Test requirements for checking turbocharging system . . . 202
1.3 Effects of leaks in charge air system . . . 203
1.4 Checking turbocharger and charge pressure control . . . 203
1.5 Checking charge pressure control solenoid valve N75 . . . 207
1.6 Checking linkage and vacuum unit for charge pressure control at turbocharger . . . 212
1.7 Checking intake manifold pressure sender G71 . . . 215

2 Turbocharger . . . 219
2.1 Turbocharger - exploded view . . . 219
2.2 Removing and installing turbocharger . . . 220
2.3 Removing and installing intermediate flange for turbocharger . . . 224

3 Charge air cooling . . . 226
3.1 Removing and installing charge air cooler . . . 226

26 - Exhaust system . . . 229

1 Removing and installing parts of exhaust system . . . 229
1.1 Silencers - exploded view . . . 229
1.2 Separating centre and rear silencers . . . 234
1.3 Removing and installing front exhaust pipe with catalytic converter . . . 235
1.4 Removing and installing starter catalytic converter - engine code letters AKE . . . 237
1.5 Removing and installing front exhaust pipe with catalytic converter - engine code letters AKE . . . 240
1.6 Stress-free alignment of exhaust system . . . 242
1.7 Checking exhaust system for leaks . . . 245

2 Exhaust manifold . . . 246
2.1 Exhaust manifold with intermediate pipe - exploded view . . . 246
2.2 Removing and installing exhaust manifold (left-side) with intermediate pipe - engine code letters AFB, AKN . . . 247
2.3 Removing and installing exhaust manifold (left-side) with intermediate pipe - engine code letters AKE . . . 250
2.4 Removing and installing exhaust manifold (right-side) with intermediate pipe . . . 254

3 Exhaust gas recirculation system . . . 261
3.1 Hose connection diagram for exhaust gas recirculation . . . 261
3.2 Checking exhaust gas recirculation . . . 261
3.3 Checking exhaust gas recirculation valve N18 . . . 263
3.4 Checking mechanical exhaust gas recirculation valve . . . 267
3.5 Removing and installing mechanical exhaust gas recirculation valve . . . 268

Reproduction of this document or parts thereof in any form or in whole, is not permitted unless authorised by AUDI AG. AUDI AG does not guarantee or accept any liability with respect to the correctness of information in this document. Copyright by AUDI AG.

Protected by copyright. Copying for private or commercial purposes, in part or in whole, is not permitted unless authorised by AUDI AG. AUDI AG does not guarantee or accept any liability with respect to the correctness of information in this document. Copyright by AUDI AG.

00 – Technical data

1 Engine number

- The engine number (“engine code” and “serial number”) is stamped on the right inner side of the cylinder block between the cylinder head and the injection pump.
- Additionally there is a sticker on the toothed belt cover with“Engine code” and “Serial number”.
- The engine code is also to be found on the vehicle data sticker.

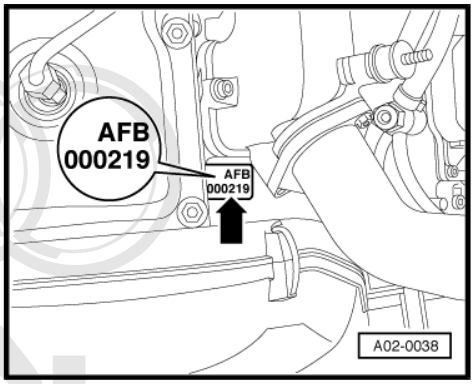

Protected by copyright. Copying for private or commercial purposes, in part or in whole, is not permitted unless authorised by AUDI AG. AUDI AG does not guarantee or accept any liability with respect to the correctness of information in this document. Copyright by AUDI AG.

2 Engine data

Code letters		AFB	AKE	AKN
Capacity	ltr.	2.5	2.5	2.5
Power output	kW at rpm	110/4000	132/4000	110/4000
Torque	Nm at rpm	310/1500 … 3200	370/1500 … 2500	310/1500 … 3200
Bore	∅ in mm	78.3	78.3	78.3
Stroke	mm	86.4	86.4	86.4
Compression ratio		18.5	18.5	18.5
CN	(minimum)	45	45	45
Firing order		1–4–3–6–2–5	1–4–3–6–2–5	1–4–3–6–2–5
Exhaust gas recirculation		yes	yes	yes
Turbocharging/supercharging		Turbocharger	Turbocharger	Turbocharger
Self-diagnosis		yes	yes	yes
Catalytic converter		yes	yes	yes
Charge air cooling		yes	yes	yes
Valves per cylinder		2	2	2

Protected by copyright. Copying for private or commercial purposes, in part or in whole, is not permitted unless authorised by AUDI AG. AUDI AG does not guarantee or accept any liability with respect to the correctness of information in this document. Copyright by AUDI AG.

3 Safety precautions

Observe the following points to prevent personal injuries and damage to the injection and glow plug system:

- Always switch off the ignition before connecting or disconnecting tester cables or electrical wiring for the injection or glow plug system.
- Always switch off ignition before washing engine.
- Faults are stored in engine control unit if electrical connectors were unplugged and the engine was started: “Interrogate fault memory” in “Vehicle self-diagnosis” ⇒ Vehicle diagnosis, testing and information system VAS 5051.

> ⚠ Caution
>
> *To prevent damage to the electronic components when disconnecting the battery:*
>
> - *Observe notes on procedure for disconnecting the battery.*
> - *Always switch off the ignition before disconnecting the battery.*

– Disconnect battery ⇒ Rep. Gr. 27 .

When working on the cooling system note the following warnings:

Copyright by AUDI AG. This document is protected by copyright. Any reproduction in part or in whole, is not permitted unless authorised by AUDI AG. AUDI AG does not guarantee or accept any liability with respect to the correctness of information in this document. Copyright by AUDI AG.

> ⚠ WARNING
>
> *Hot steam/hot coolant can escape - risk of scalding.*
>
> - *The cooling system is under pressure when the engine is hot.*
> - *To allow pressure to dissipate, cover filler cap on expansion tank with cloth and open carefully.*

Note the following if testers and measuring instruments have to be used during a road test:

> ⚠ WARNING
>
> *Accidents can be caused if the driver is distracted by test equipment while road-testing, or if test equipment is not properly secured.*
>
> *Persons sitting in the front passenger's seat could be injured if the airbag is triggered in an accident.*
>
> - *The use of test equipment while driving causes distraction.*
> - *There is an increased risk of injury if test equipment is not secured.*
> - *Test equipment must always be secured on the rear seat with a strap and operated from the rear seat by a second person.*

4 General repair instructions

4.1 Rules for cleanliness when working on fuel supply system, injection system and turbocharger

Even small amounts of dirt can cause malfunctions. For this reason, please observe the following rules when working on the fuel supply system, injection system and turbocharger:

- Carefully clean connection points and the surrounding area with engine cleaner or brake cleaner and dry thoroughly before opening.
- Seal off open lines and connections with clean plugs or sealing caps immediately.
- Place parts that have been removed on a clean surface and cover them over. Use only lint-free cloths.
- Carefully cover or seal open components if repairs cannot be carried out immediately.
- Only install clean components; replacement parts should only be unpacked immediately prior to installation. Do not use parts that have been previously unpacked and stored away loose (e.g. in toolboxes, etc.).
- When the system is open: Do not work with compressed air. Do not move the vehicle unless absolutely necessary.
- Protect unplugged electrical connectors against dirt and moisture and make sure connections are dry when attaching.

4.2 Checking for leaks in the fuel system

- Allow engine to run for several minutes at moderate rpm.
- Switch off ignition.
- Check complete fuel system for leaks.
- If leaks are found although the connections have been tightened to the correct torque, the relevant component must be renewed.
- Road-test vehicle and accelerate with full throttle at least once.
- Then check high-pressure part of fuel system again for leakage.

4.3 Contact corrosion!

Contact corrosion can occur if unsuitable fasteners are used (e.g. bolts, nuts, washers, etc.).

For this reason, only fasteners with a special surface coating are used.

Additionally, all rubber and plastic parts and all adhesives are made of non-conductive materials.

Always install new parts if you are not sure whether used parts can be re-fitted ⇒ Electronic parts catalogue.

Protected by copyright. Copying for private or commercial purposes, in part or in whole, is not permitted unless authorised by AUDI AG. AUDI AG does not guarantee or accept any liability with respect to the correctness of information in this document. Copyright by AUDI AG.

Note the following:

- We recommend using only genuine replacement parts; these have been tested and are compatible with aluminium.
- We recommend the use of Audi accessories.

- Damage caused by contact corrosion is not covered under warranty.

4.4 Installing radiators, condensers and charge air coolers

Even when the radiator, condenser and charge air cooler are correctly installed, slight impressions may be visible on the fins of these components. This does not mean that the components are damaged. If the fins are only very slightly distorted, this does not justify renewal of the radiator, charge air cooler or condenser.

4.5 Checking vacuum system

Special tools and workshop equipment required

- Hand vacuum pump -VAS 6213-

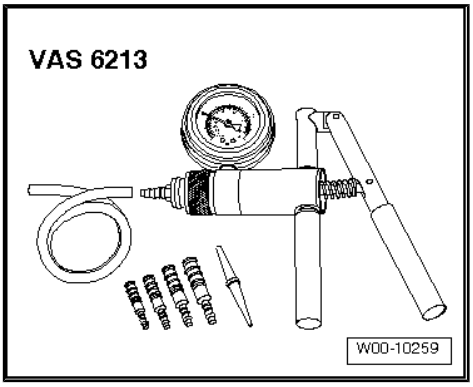

Procedure

– Check all vacuum lines in the complete vacuum system for:
- Cracks
- Traces of animal bites
- Kinked or crushed lines
- Lines porous or leaking

– Check vacuum line to solenoid valve and from solenoid valve to corresponding component.

– If a fault is stored in the fault memory, check the vacuum lines leading to the corresponding component and also check the remaining vacuum lines in the system.

– If it is not possible to build up pressure with hand vacuum pump -VAS 6213- or if the pressure drops again immediately, check hand vacuum pump and connecting hoses for leaks.

4.6 Routing and attachment of pipes, hoses and wiring

Mark hydraulic lines, vacuum lines and electrical wiring before removal so they can be re-installed in the original positions and correctly connected. Make sketches or take photographs if necessary.

Copyright by AUDI AG. Reproduction of this service information in part or in whole, is not permitted unless authorised by AUDI AG. AUDI AG does not guarantee or accept any liability with respect to the correctness of information in this document. Copyright by AUDI AG.

10 – Removing and installing engine

1 Removing engine

Special tools and workshop equipment required

- Retaining tool -VW 785/1 B-
- Lifting tackle -2024 A-
- Pin wrench -3212-
- Workshop hoist - VAS 6100-
- Drip tray for workshop hoist -VAS 6208-
- Wiring harness repair set - VAS 1978 B-

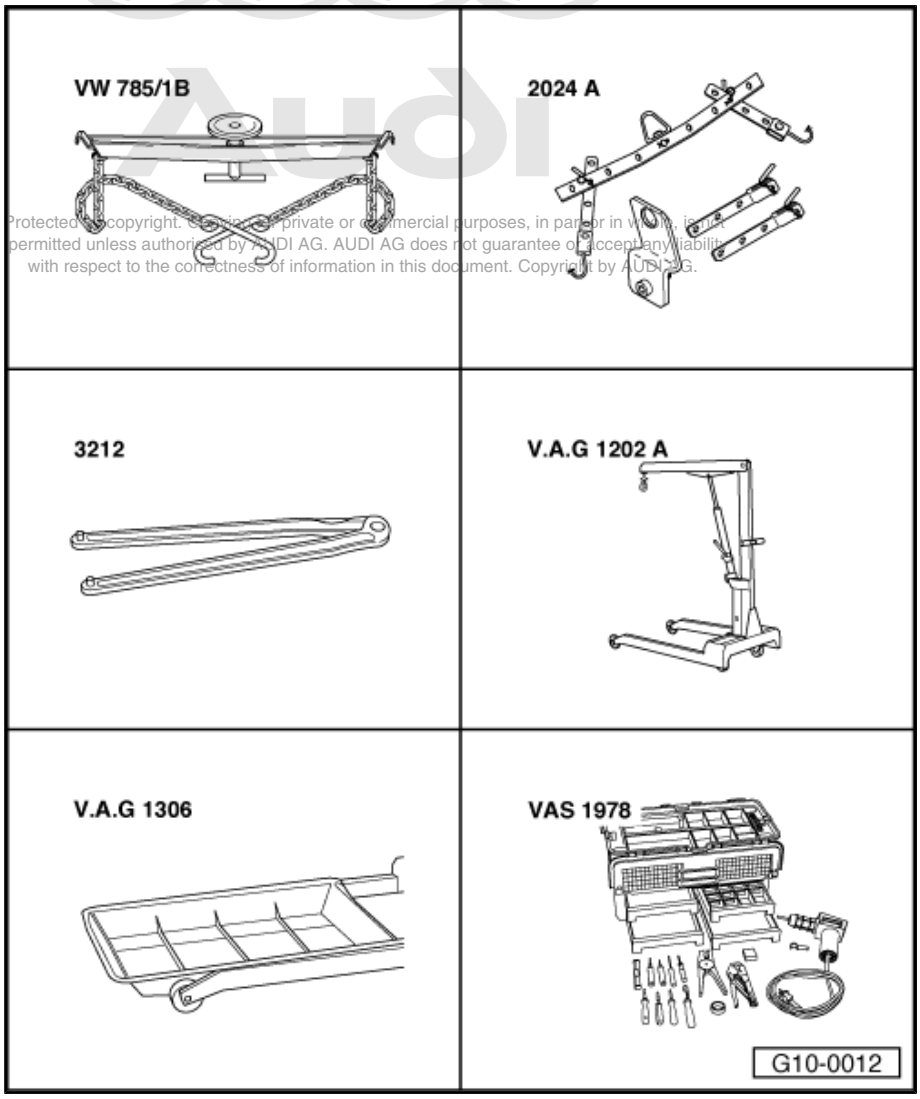

Protected by copyright. Copying for private or commercial purposes, in part or in whole, is not permitted unless authorised by AUDI AG. AUDI AG does not guarantee or accept any liability with respect to the correctness of information in this document. Copyright by AUDI AG.

- Support bridge -30 - 211 A- for vehicles with automatic gearbox
- Special tool -V/175- for vehicles with automatic gearbox

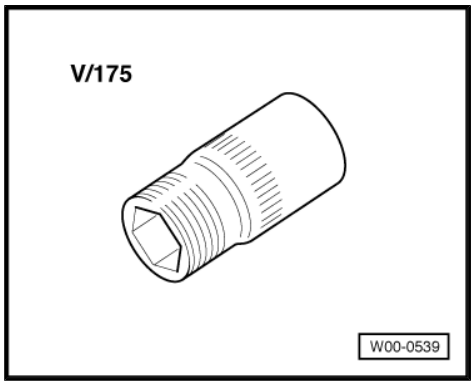

- Locking pin -T10060 A-

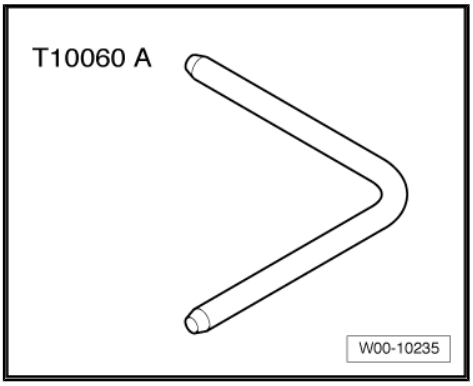

Procedure

Note

- *The engine is removed from the front without the gearbox.*
- *Collect drained coolant in a clean container for re-use or disposal.*
- *Fit all cable ties in the original positions when installing.*

– Move selector lever to position “N” on vehicles with automatic gearbox.

Caution

To prevent damage to the electronic components when disconnecting the battery:

- ***Observe notes on procedure for disconnecting the battery.***

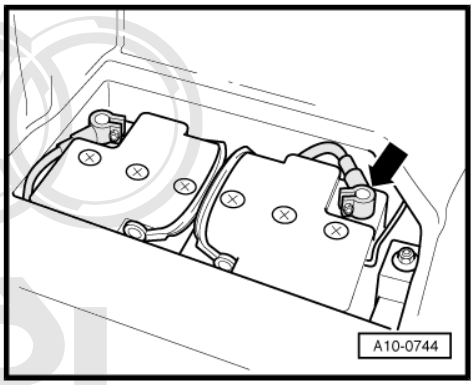

– Disconnect earth wire -arrow- (in luggage compartment on right side underneath cover) from battery terminal ⇒ Rep. Gr. 27 .

– Detach caps on engine cover panel.

– Unbolt and remove engine cover panel -arrows-.

Protected by copyright. Copying for private or commercial purposes, in part or in whole, is not permitted unless authorised by AUDI AG. AUDI AG does not guarantee or accept any liability with respect to the correctness of information in this document. Copyright by AUDI AG.

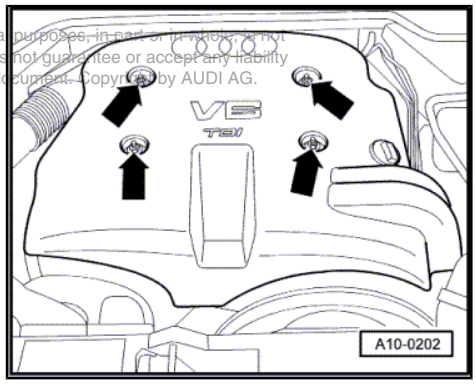

– Remove cover panels -1 … 4-.

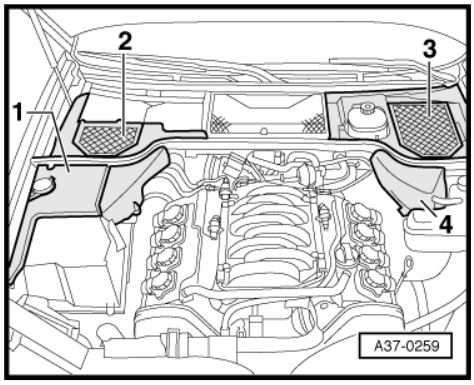

> ⚠ **WARNING**
>
> *Hot steam/hot coolant can escape - risk of scalding.*
>
> - *The cooling system is under pressure when the engine is hot.*
> - *To allow pressure to dissipate, cover filler cap on expansion tank with cloth and open carefully.*

– Open filler cap on expansion tank.

– Remove air ducts -1- and -2-.

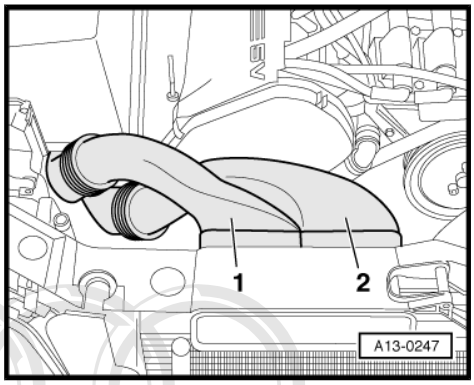

– Unscrew viscous fan (32 mm).

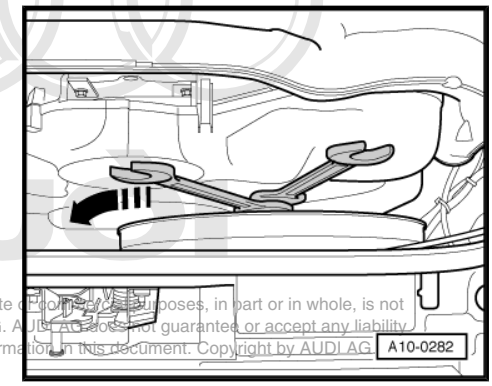

Protected by copyright. Copying for private or commercial purposes, in part or in whole, is not permitted unless authorised by AUDI AG. AUDI AG does not guarantee or accept any liability with respect to the correctness of information in this document. Copyright by AUDI AG.

– Unscrew bolt -arrow- from front and remove air duct for viscous fan.

– Detach viscous fan with air duct.

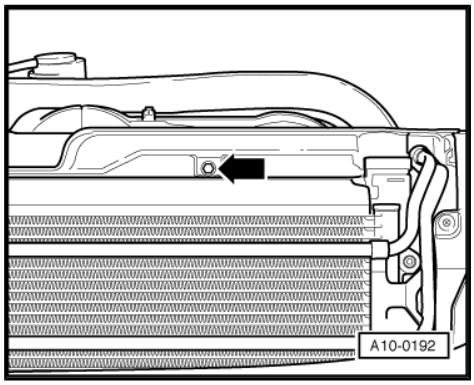

– Push out pin -1-, take out clip and remove electric fan.
– Move wiring for electric fan clear.
– Turn electric fan in direction of -arrow- and detach it.
– Move electric fan clear to one side.

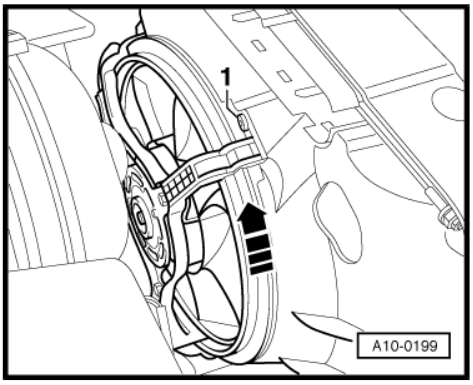

– Remove poly V-belt cover -arrows-.

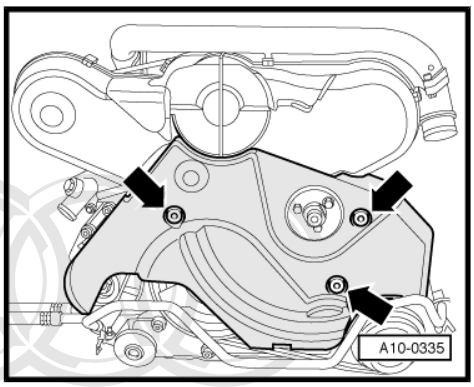

Note

Watch position of spacer sleeves for poly V-belt cover.

– Detach cover from tensioning roller of air conditioner compressor.

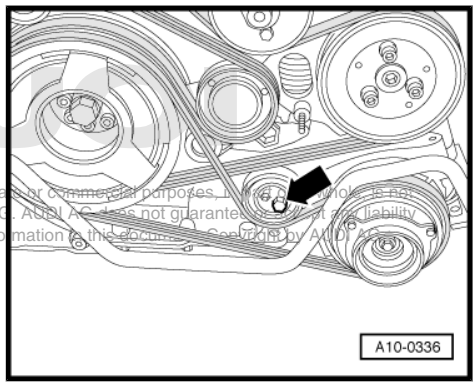

Caution

If a used belt runs in the opposite direction when it is refitted, this can cause breakage.

- ***Before removing, mark direction of rotation of poly V-belt with chalk or felt-tipped pen for re-installation.***

– Slacken off bolt -arrow- of tensioning roller for air conditioner compressor and detach poly V-belt.

Protected by copyright. Copying for private or commercial purposes, in part or whole, is not permitted unless authorised by AUDI AG. AUDI AG does not guarantee or assume any liability with respect to the correctness of information in this document. Copyright by AUDI AG.

Caution

If a used belt runs in the opposite direction when it is refitted, this can cause breakage.

- ***Before removing, mark direction of rotation of poly V-belt with chalk or felt-tipped pen for re-installation.***

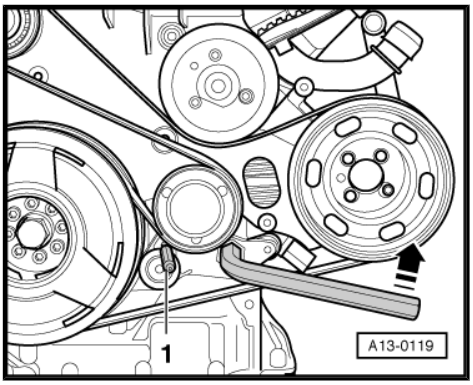

– To slacken poly V-belt, use an Allen key to turn tensioner in anti-clockwise direction -arrow- until the two bores align and locking pin -T10060- or -T10060 A- can be inserted.
– Take off poly V-belt.

– Remove 8 bolts -1- and detach vibration damper.

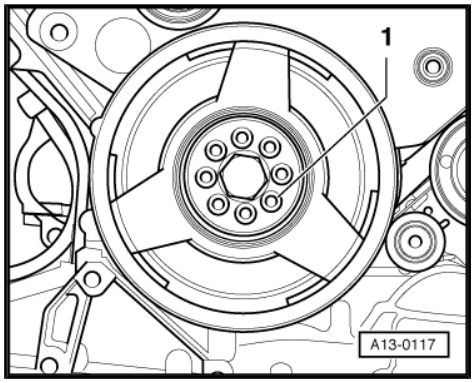

Note

Central bolt does not have to be loosened when removing vibration damper.

– Remove heat shield above turbocharger -arrows-.

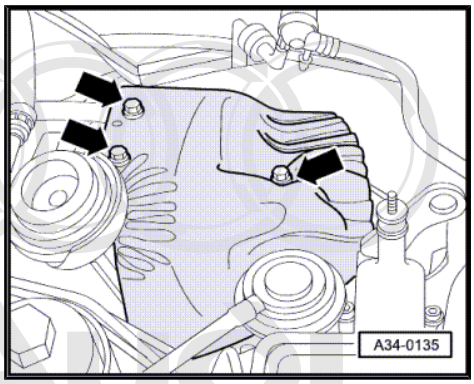

– Unbolt front exhaust pipe from connection for turbocharger -arrows-.

Protected by copyright. Copying for private or commercial purposes, in part or in whole, is not permitted unless authorised by AUDI AG. Audi AG does not guarantee or assume any liability with respect to the correctness of information in this document. Copyright by AUDI AG.

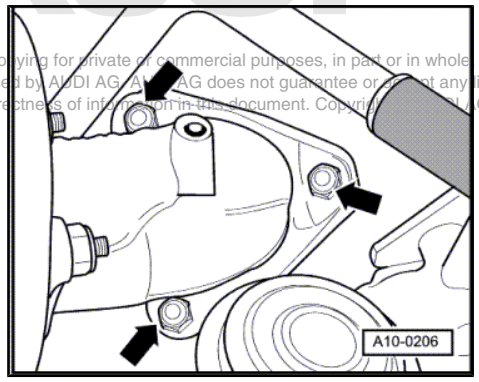

– Remove bolts -arrows- securing exhaust pipe for auxiliary/ supplementary heater to noise insulation.

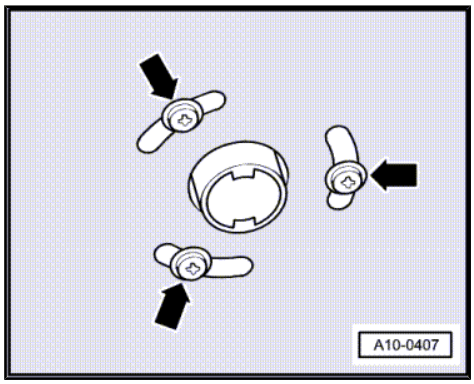

– Release quick-release fasteners -1- and -2- and take off front and rear noise insulation.

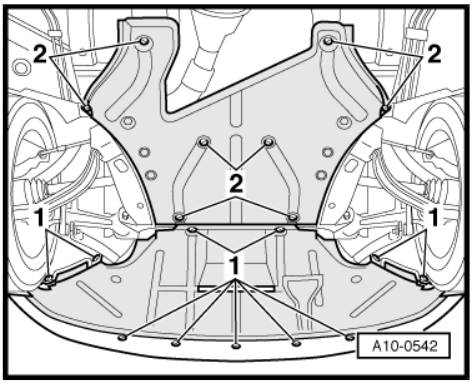

– Unbolt bracket for noise insulation -arrows-.

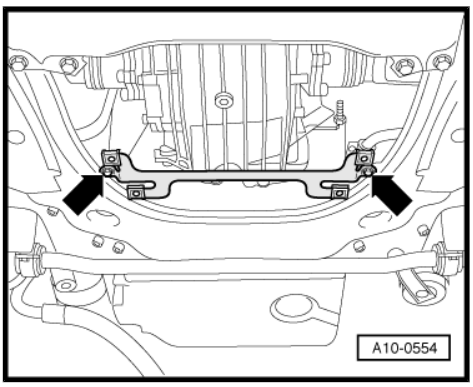

– Remove front exhaust pipe together with catalytic converter -arrows-.

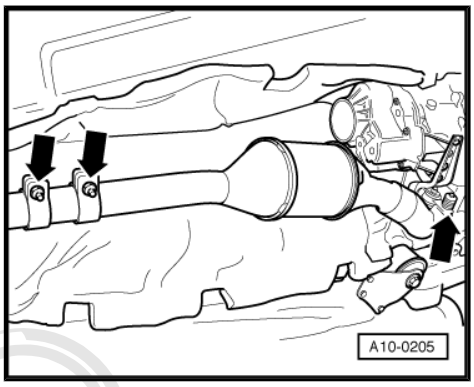

Note

Illustration shows vehicle with front-wheel drive.

– Place drip tray for workshop hoist -VAS 6208- beneath engine.

– Drain off coolant at bottom right; to do so, turn drain plug -1- 90° in anti-clockwise direction and remove drain plug -2- from coolant drain pipe.

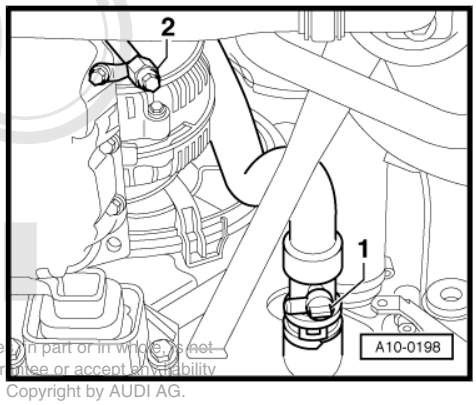

Protected by copyright. Copying for private or commercial purposes, in part or in whole, is not permitted unless authorised by AUDI AG. AUDI AG does not guarantee or accept any liability with respect to the correctness of information in this document. Copyright by AUDI AG.

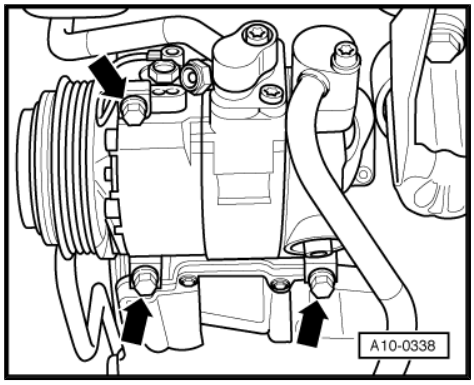

Caution

Danger of damage to refrigerant lines and hoses.

- *Do NOT stretch, kink or bend refrigerant lines and hoses.*

– Unbolt air-conditioner compressor from bracket -arrows-.

Caution

Danger of damage to refrigerant lines and hoses.

- *Do NOT stretch, kink or bend refrigerant lines and hoses.*

– Tie air conditioner compressor up to side at body longitudinal member (leave hoses connected).

– Remove torque reaction support -1- and stop for torque reaction support -2-.

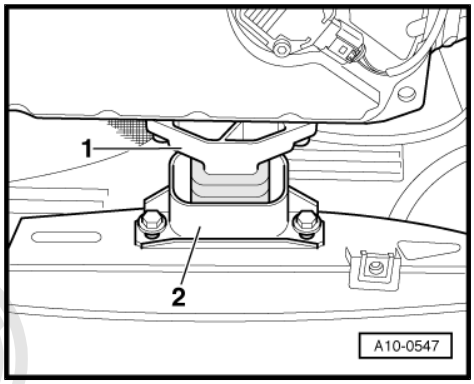

– Unscrew damper weight (right-side) -arrow- from subframe.

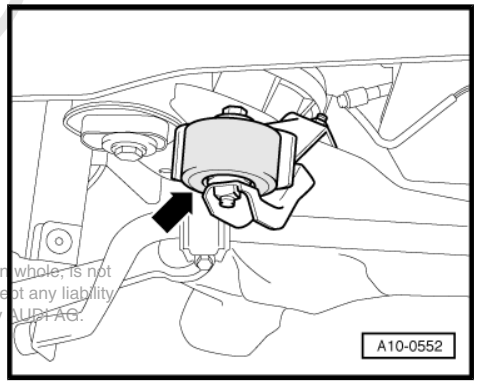

Protected by copyright. Copying for private or commercial purposes, in part or in whole, is not permitted unless authorised by AUDI AG. AUDI AG does not guarantee or accept any liability with respect to the correctness of information in this document. Copyright by AUDI AG.

Vehicles with automatic gearbox:

– Remove bolts for alternator.

– Disconnect electrical wires -1- and -2- at alternator.

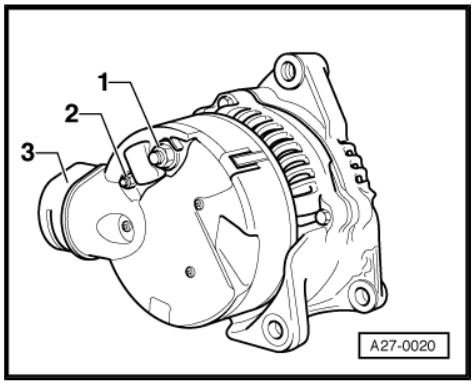

– Detach wires -1- and -2- from starter.

– Unscrew bolts -arrows- securing starter working from gearbox side and remove starter.

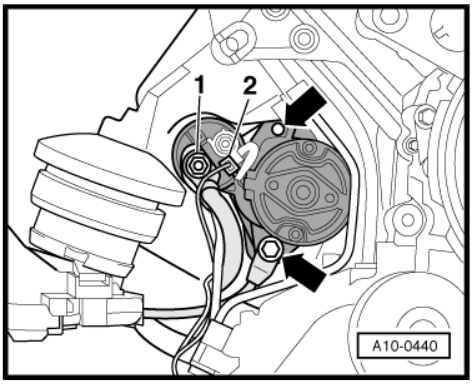

– Unscrew clamp -arrow- and move wiring clear.

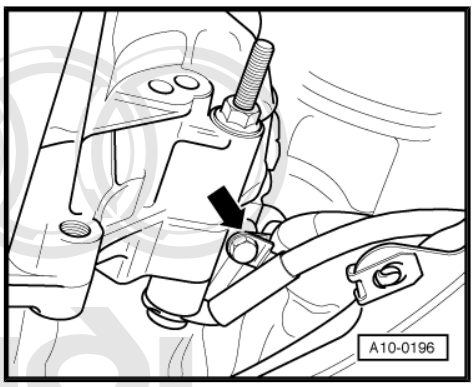

– Use special tool -V/175- to unscrew 3 bolts for torque converter through opening for starter (turn crankshaft 1/3 turn further each time).

Protected by copyright. Copying for private or commercial purposes, in part or in whole, is not permitted unless authorised by AUDI AG. AUDI AG does not guarantee or accept any liability with respect to the correctness of information in this document. Copyright by AUDI AG.

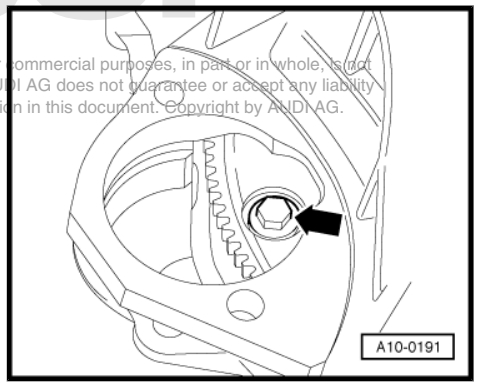

Note

When loosening torque converter bolts, counterhold at the crankshaft central bolt.

Vehicles with manual gearbox:

– Remove noise insulation above drive shaft (right-side) -arrows-.

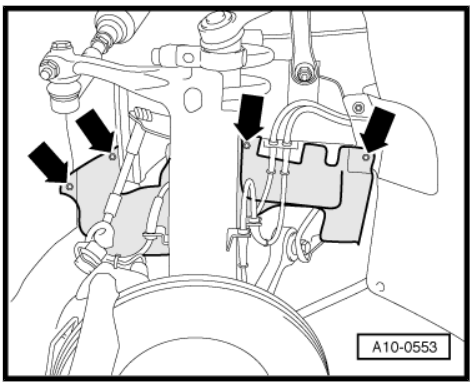

– Detach connector plug for starter cable (at junction box on longitudinal member, right-side) from bracket and unplug it.
– Unclip junction box cover.
– Remove electrical for starter from junction box and bracket.
– Move electrical wiring clear.

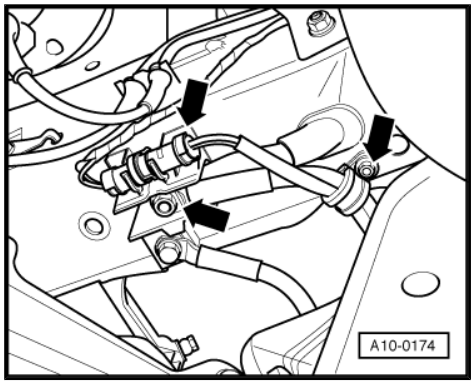

– Unplug electrical connector -arrow- at reversing light switch -F4- .

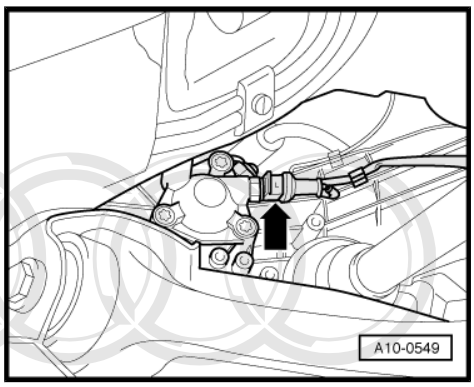

All vehicles (continued):

– Remove noise insulation above drive shaft (left-side) -arrows-.

Protected by copyright. Copying for priv purpose, in p whole is not permitted unless authorised by AUDI A not guar ot any liability with respect to the correctness of info in this cument. y AUDI AG.

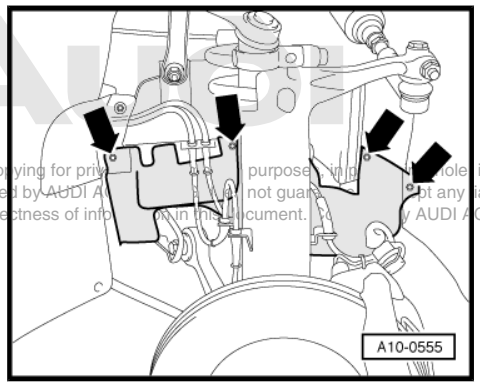

– Detach heat shield for drive shaft (left-side) -1- from gearbox -arrows-.

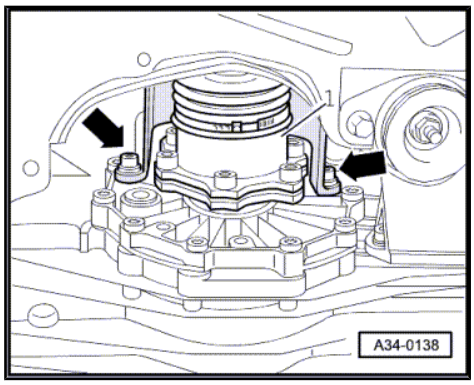

– Unplug electrical connector -2- at speedometer sender -G22- .

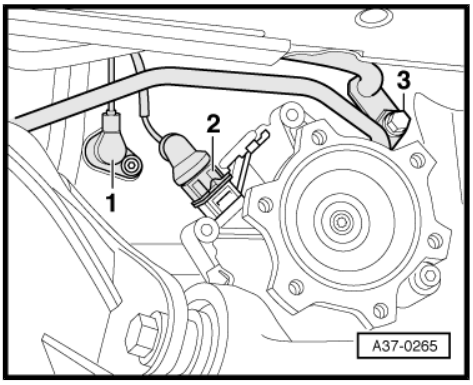

Note

Leave engine speed sender -G28- -item 1- installed.

Vehicles with automatic gearbox:

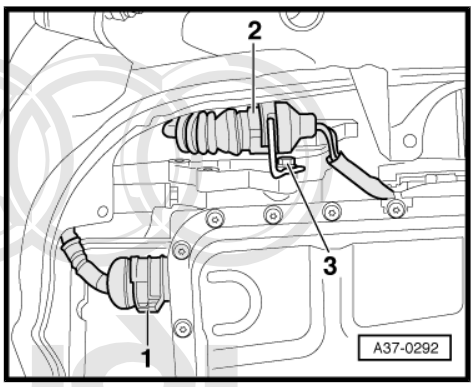

Note

Observe rules for cleanliness when working on automatic gearbox ⇒ Rep. Gr. 37 .

– Unscrew bolt -3- and detach ATF pipes from gearbox.
– Move ATF pipes clear to side.
– Turn locking lever -1- and unplug connector for gearbox wiring harness.
– Unplug electrical connector -2- for multi-function switch.

Protected by copyright. Copying for private or commercial purposes, in part or in whole, is not permitted unless authorised by AUDI AG. AUDI AG does not guarantee or accept any liability with respect to the correctness of information in this document. Copyright by AUDI AG.

All vehicles (continued):

– Unplug electrical connector -arrow- at engine mounting (left-side).
– Move wiring harness clear.
– Unscrew engine/gearbox securing bolts (accessible from below).

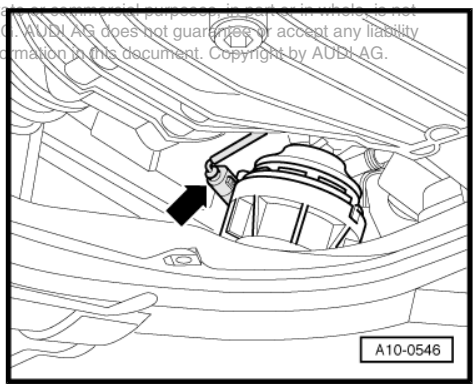

– Unscrew bolts (bottom) -arrows- at engine mountings.

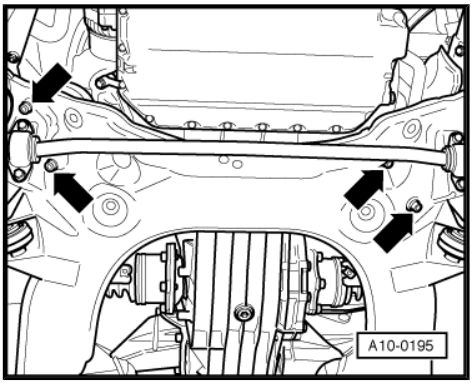

– Remove coolant hoses between engine and heat exchanger for heater -arrows-.

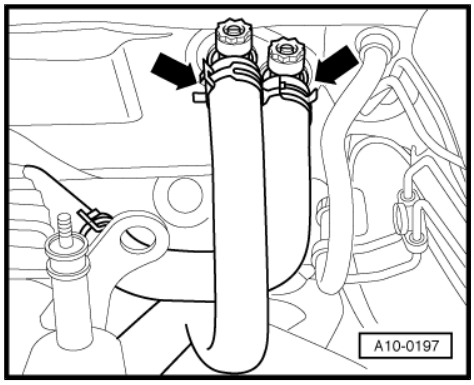

– Disconnect vacuum hose leading to exhauster pump -arrows-.

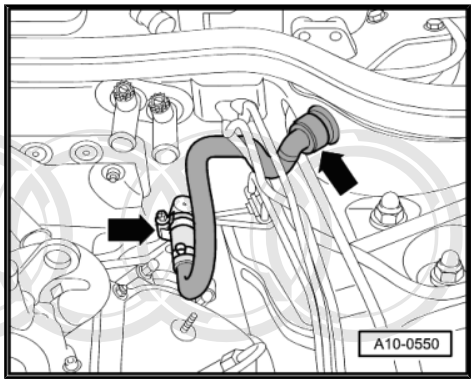

– Disconnect coolant hoses -arrows-.

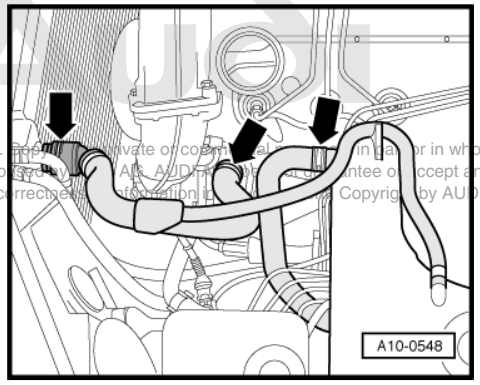

Protected by copyright. Reproduction for private or commercial purposes, in part or in whole, is not permitted unless authorised by AUDI AG. AUDI AG does not guarantee or accept any liability with respect to the correctness of information in this document. Copyright by AUDI AG.

– If fitted, disconnect vacuum line -1- at cut-off flap connection.
– Unplug electrical connector -2- at variable intake manifold flap change-over valve -N239- .

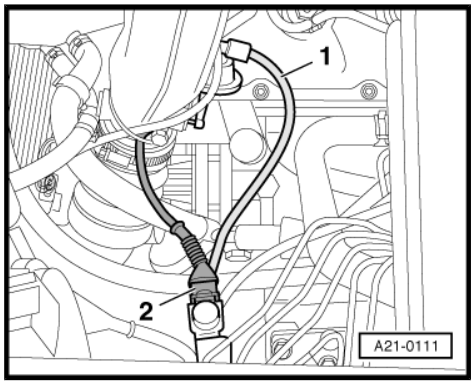

– Unplug electrical connector -1- at intake manifold pressure sender -G71- .
– Remove charge air hose -2- leading to intake manifold.

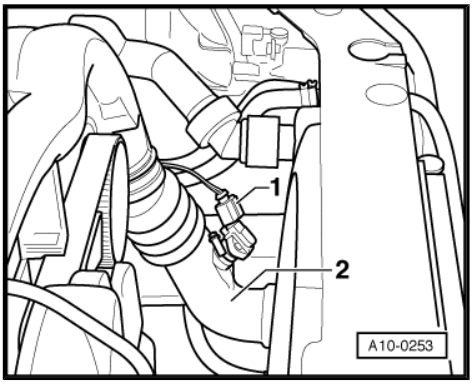

– Unbolt poly V-belt pulley at power steering pump -arrows-, using pin wrench -3212- as a counterhold.
– Unbolt power steering pump from bracket and tie it up to longitudinal member.

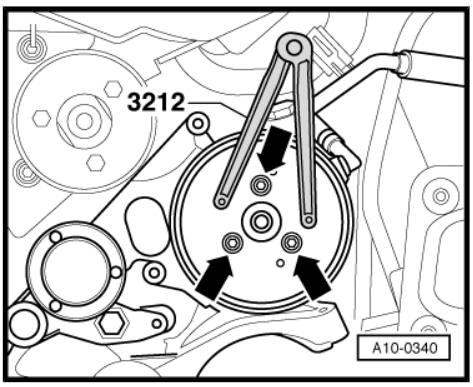

Note

Pipes of power steering pump remain connected.

– Remove intake hose -1- from air cleaner -arrows-.
– Remove air hose leading to charge air cooler -2-.

Protected by copyright. Copying for private or commercial purposes, in part or in whole, is not permitted unless authorised by AUDI AG. AUDI AG does not guarantee or accept any liability with respect to the correctness of information in this document. Copyright by AUDI AG.

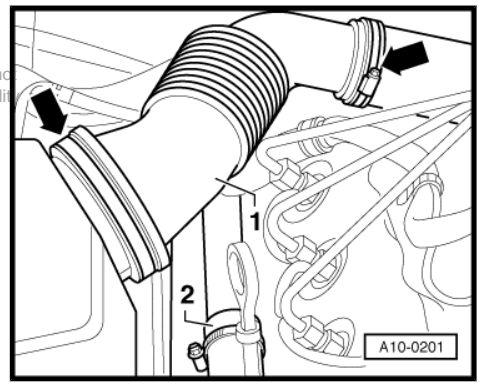

– Unplug electrical connector -1- at radiator fan thermal switch -F18- .
– Disconnect coolant hose -2-.
– Disconnect hoses leading to auxiliary/supplementary heater -3-.

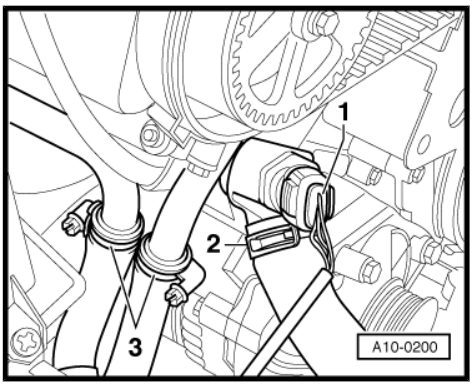

– Detach fuel lines -arrows- from fuel filter.
– Move fuel lines clear.
– Remove air cleaner cover.

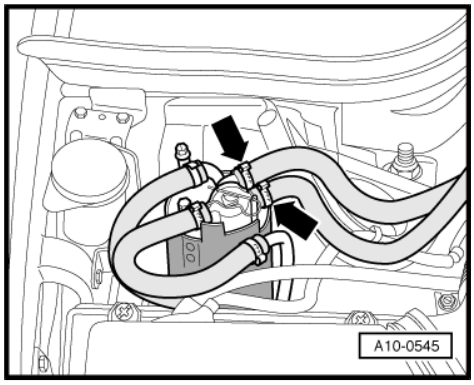

– Unplug electrical connector -arrow- at air mass meter.
– Move wire clear.

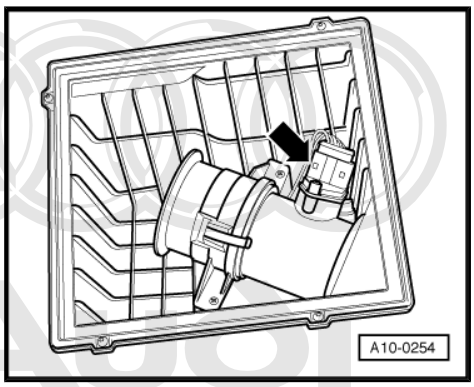

– Unplug electrical connectors -1 ... 4-.
– Disengage connector -3- from bracket.
– Slide charge pressure control solenoid valve -N75- and exhaust gas recirculation valve -N18- off bracket in direction of -arrow- and move clear.

Protected by copyright. Copying for private or commercial purposes, in part or in whole, is not permitted unless authorised by AUDI AG. AUDI AG does not guarantee or accept any liability with respect to the correctness of information in this document. Copyright by AUDI AG.

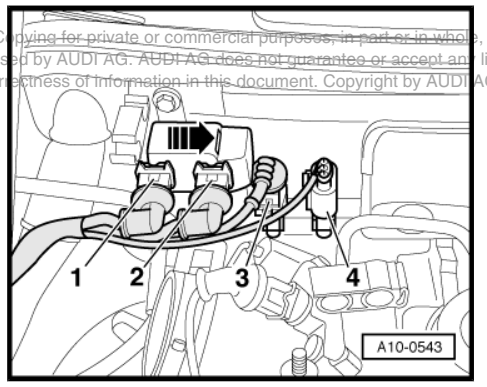

– Disconnect vacuum hoses -arrows- from turbocharger and mechanical exhaust gas recirculation valve.
– Move vacuum hoses clear.

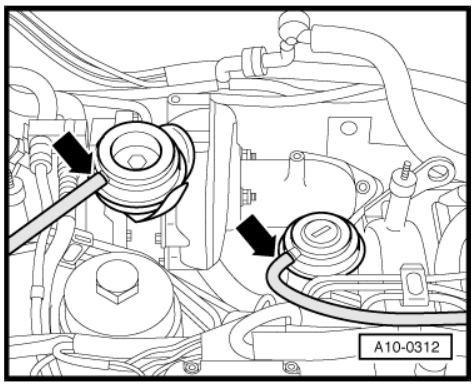

– Remove seal -1- for plenum chamber.
– Unbolt body brace -2- -arrows-.

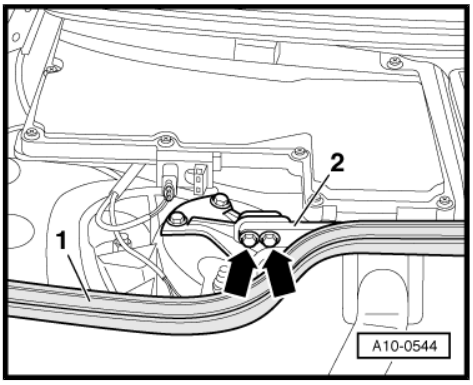

– Prise out cover -1- in cowl panel trim and loosen rear cross-head bolt -arrow- at rear right.
– Slacken off the remaining cross-head bolts -arrows-.
– Detach cover for electronics box in plenum chamber.

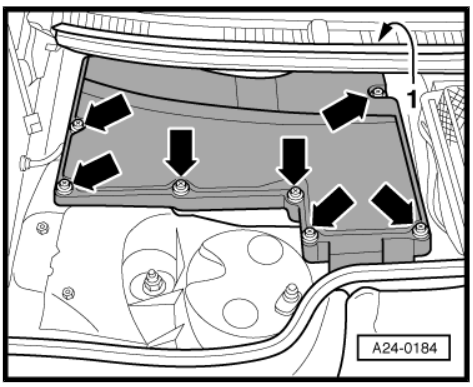

– Unplug all connectors -1- from engine control unit and gearbox control unit and unplug all connectors -2-.
– Remove relay carrier -3-.
– Release both fuse holders at relay carrier and lift them off.

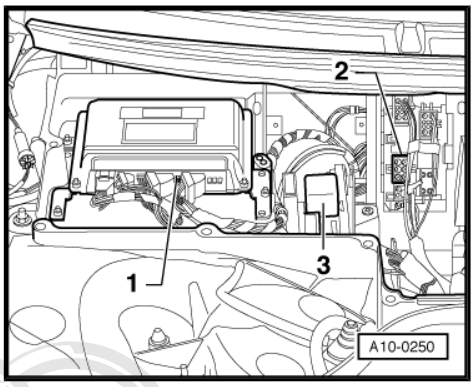

Note

Make sure to fit each wire in its original position when connecting (apply a marking on each wire for allocation).

– Release contact in chamber “2” of each fuse holder using release tool -VAS 1978/8A- .
– Set down complete wiring harness on engine.
– Unscrew engine/gearbox securing bolts (top); leave one bolt in place (hand-tight).

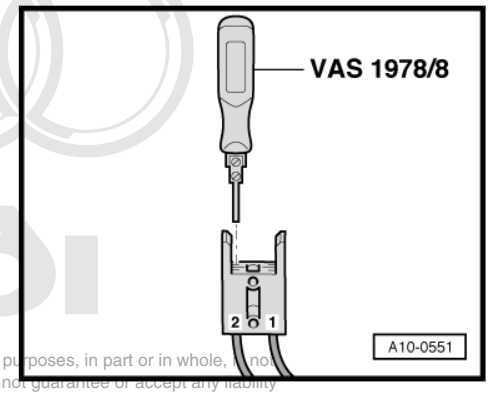

Protected by copyright. Copying for private or commercial purposes, in part or in whole, is not permitted unless authorised by AUDI AG. AUDI AG does not guarantee or accept any liability with respect to the correctness of information in this document. Copyright by AUDI AG.

– Loosen bolt -A- (at rear of turbocharger) a few turns and turn brace -B- to side in direction of -arrow-. Then tighten bolt -A- again slightly.

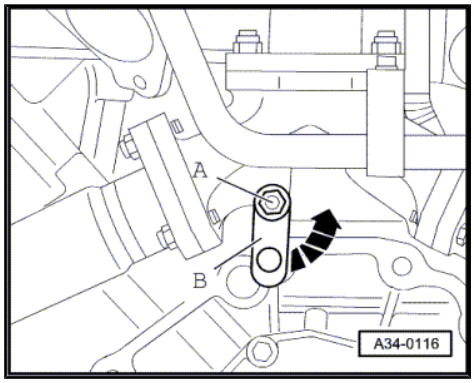

Note

In the illustration the engine is shown from the rear with the gearbox removed.

– Disengage both gas struts for bonnet (at bonnet).

– Position bonnet vertically and provide appropriate support.

WARNING

Check that bonnet is supported securely.

– Engage lifting tackle -2024 A- on engine and workshop hoist -VAS 6100- .

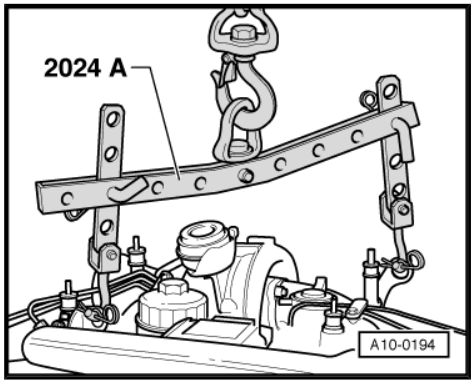

Note

To adjust to the centre of gravity of the assembly, the perforated rails of the support hooks must be positioned as shown.

WARNING

Accident risk from loose components of support bracket.

- ***The support hooks and retaining pins on the support bracket must be secured with locking pins.***

– Unscrew final bolt.

Note

Check that all hoses and other connections between engine and body have been detached.

– Raise engine and gearbox using workshop hoist -VAS 6100- .

Protected by copyright. Copying for private or commercial purposes, in part or in whole, is not permitted unless authorised by AUDI AG. AUDI AG does not guarantee or accept any liability with respect to the correctness of information in this document. Copyright by AUDI AG.

Note

Make sure no wires/pipes are damaged at the top on the bulkhead.

– On vehicles with automatic gearbox, separate gearbox from engine and at the same time detach torque converter from drive plate.

– Detach engine from gearbox and lift engine upwards out of engine compartment.

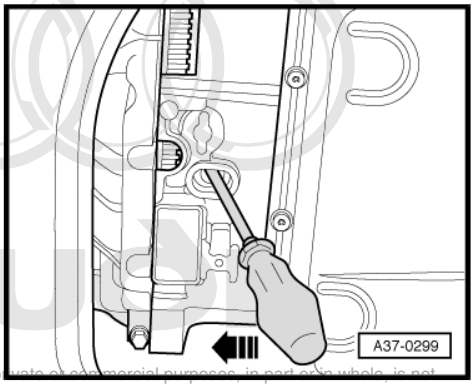

Protected by copyright. Copying for private or commercial purposes, in part or in whole, is not permitted unless authorised by AUDI AG. AUDI AG does not guarantee or accept any liability with respect to the correctness of information in this document. Copyright by AUDI AG.

– On vehicles with automatic gearbox, secure torque converter in gearbox using support bridge -30 - 211 A- to prevent it falling out.

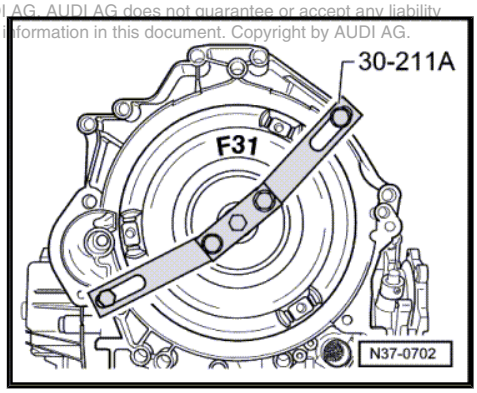

2 Securing engine to engine and gearbox support

Special tools and workshop equipment required

- Engine and gearbox support -VW 540-

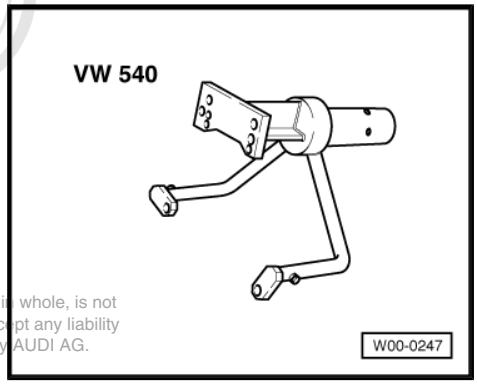

Protected by copyright. Copying for private or commercial purposes, in part or in whole, is not permitted unless authorised by AUDI AG. AUDI AG does not guarantee or accept any liability with respect to the correctness of information in this document. Copyright by AUDI AG.

- Engine and gearbox support supplement -VW 540/1 B-

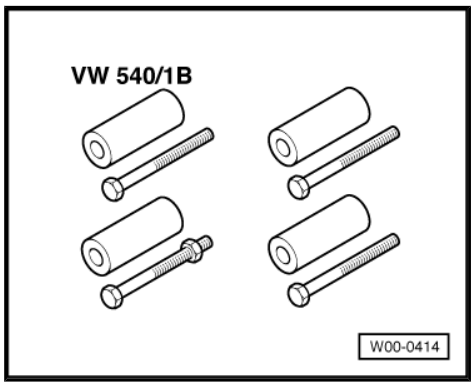

- Engine and gearbox support -VAS 6095-

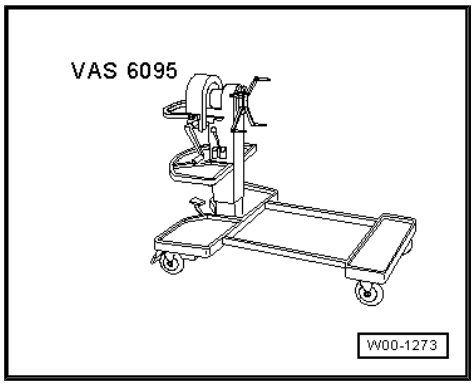

- Drill bit, ∅ 13 mm
- Electric drill
- Safety goggles

Procedure

WARNING

Protect eyes against injuries.

- *Wear safety goggles.*

– Drill out hole -arrow- in engine and gearbox support -VW 540- to 13 mm.

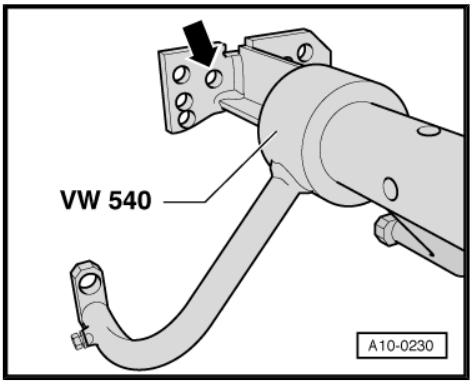

– Secure engine to engine and gearbox support -VAS 6095- using -VW 540- and -VW 540/1 B- prior to assembly work.

Protected by copyright. Printed for private or commercial purposes, in part or in whole, is not permitted unless authorised by AUDI AG. AUDI AG does not guarantee or accept any liability with respect to the correctness of information in this document. Copyright by AUDI AG.

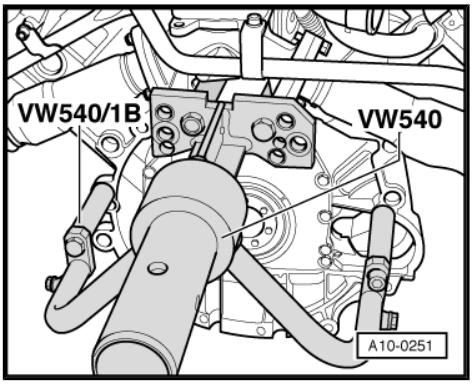

3 Installing engine

Procedure

Installation is carried out in the reverse order; note the following:

Note

- *Renew the bolts tightened with specified tightening angle.*
- *Renew self-locking nuts and bolts as well as seals, gaskets and O-rings.*
- *Hose connections and hoses for charge air system must be free of oil and grease before assembly.*

– Before installing engine, check that brace -B- is still turned to one side in direction of -arrow- (brace is pivoted back down after installing engine).

– Before installing engine, tie electrical wiring to one side so that it cannot be trapped between engine and gearbox.

Protected by copyright. Copying for private or commercial purposes, in part or in whole, is not permitted unless authorised by AUDI AG. AUDI AG does not guarantee or accept any liability with respect to the correctness of information in this document. Copyright by AUDI AG.

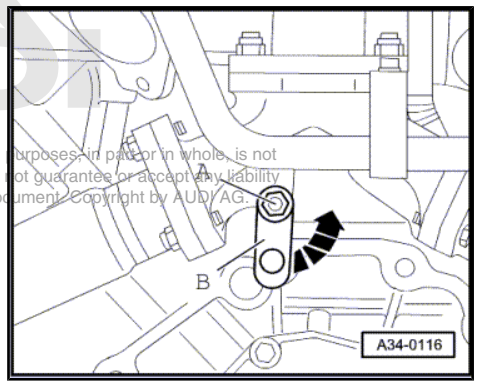

– Check whether dowel sleeves -A- for centring engine and gearbox are fitted in cylinder block; install missing dowel sleeves.

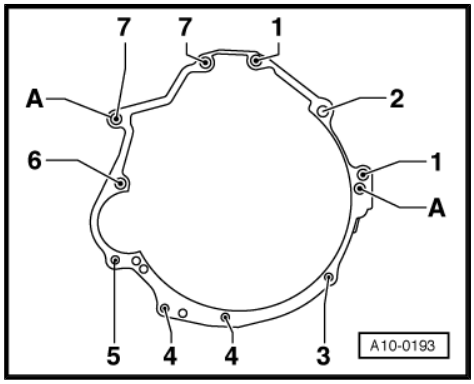

Vehicles with manual gearbox:

– Clean the input shaft splines and (in the case of used clutch plates) the hub splines. Remove corrosion and apply only a very thin coating of grease -G 000 100- to the splines. Do not lubricate guide sleeve.

– Check clutch release bearing for wear; renew if necessary.

– Check that the clutch plate is properly centralised (only necessary if you have carried out other work on the clutch).

– A needle bearing must be fitted in the flywheel on vehicles with manual gearbox. Install needle bearing if necessary ⇒ page 79 .

Vehicles with front-wheel drive:

– Attach retaining tool -VW 785/1 B- to inner bushes of transverse links (front).

– Place a piece of wood -1- on plate of spindle and support gearbox.

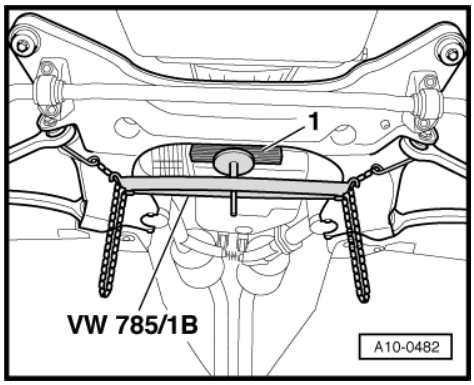

Vehicles with automatic gearbox:

– Short engines are supplied without centring sleeve in crankshaft. Drive sleeve in before installing drive plate ⇒ page 84 .

– To secure torque converter on drive plate, use only new bolts (same as original equipment); refer to ⇒ Electronic parts catalogue .

– Tighten bolts for torque converter with special tool -V/175- .

Checking installation depth of torque converter:

- If the torque converter has been correctly installed, the distance between the bottom contact surfaces at the threaded holes on the torque converter and the contact surface on the torque converter bell housing (with automatic gearbox) is approx. 23 mm.

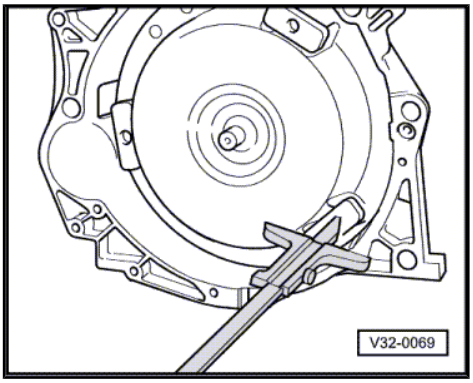

> **Caution**
>
> *Risk of damage to gearbox if torque converter is installed incorrectly.*
>
> ♦ *If the torque converter has not been fully inserted, this distance will be approx. 11 mm.*

– Before bringing engine and gearbox together, turn torque converter and drive plate on engine so that the holes for one securing bolt are in line with the opening for the starter motor -arrow-.

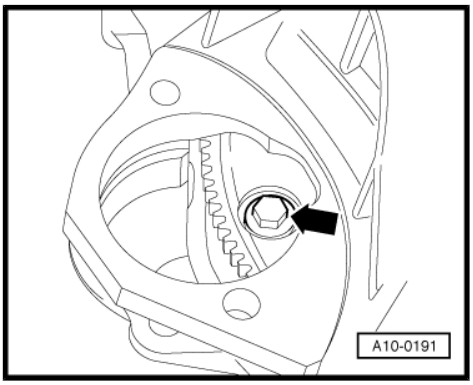

Protected by copyright. Copying or distribution of this document is not permitted unless authorised by AUDI AG. AUDI AG does not guarantee or accept any liability with respect to the correctness of information in this document. Copyright by AUDI AG.

– To secure torque converter on drive plate, use only new bolts (same as original equipment); refer to ⇒ Electronic parts catalogue .

> **Caution**
>
> *Risk of damage to gearbox if torque converter is installed incorrectly.*
>
> ♦ *Before and during tightening of bolts securing engine to gearbox, continually check that the torque converter behind the drive plate can be turned.*
>
> ♦ *If the torque converter cannot be turned, the drive lugs of the ATF pump and consequently the gearbox will be damaged when the bolts are finally tightened.*

– Secure ATF lines ⇒ Rep. Gr. 37 .

All vehicles (continued):

– Install engine mountings free of stress. To do so, shake engine before tightening engine mountings.

– Install air conditioner compressor and power steering pump.

– Check whether dowel sleeves -B- for centring air conditioner compressor have been installed.

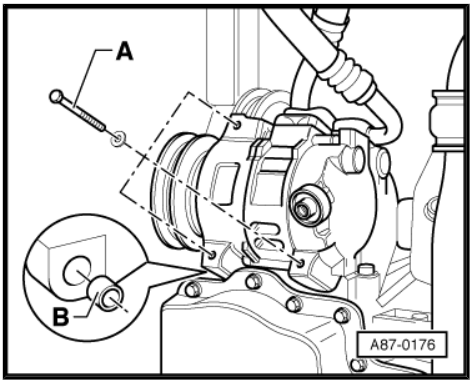

– Bolt on power steering pump at holes -B- on bracket -A-.

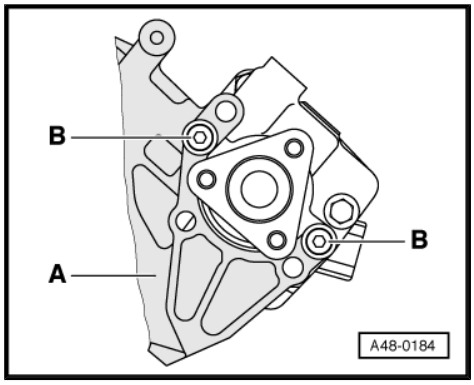

– Install poly V-belt pulley for power steering pump.
– Install alternator ⇒ Rep. Gr. 27 .
– Install poly V-belt for power steering pump, alternator and viscous fan ⇒ page 31 .

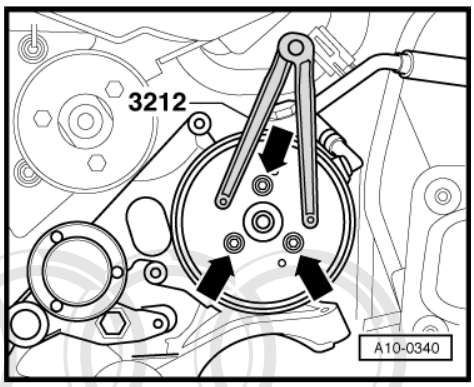

Protected by copyright. Copying for private or commercial purposes, in part or in whole, is not permitted unless authorised by AUDI AG. AUDI AG does not guarantee or accept any liability with respect to the correctness of information in this document. Copyright by AUDI AG.

– Secure viscous fan.

Tightening torque for viscous fan	Nm
Torque wrench -V.A.G 1331- together with open-end spanner -3312-	37
Torque wrench -V.A.G 1331- without open-end spanner -3312-	70

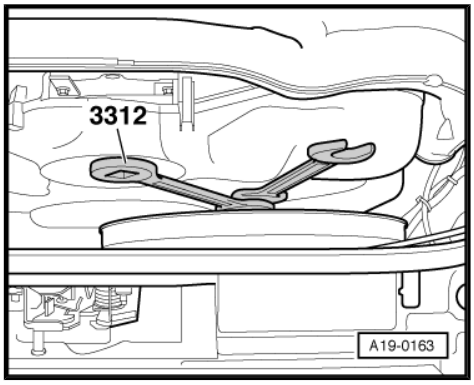

– Allow stop for torque reaction support to rest on rubber buffer for torque reaction support under its own weight, and tighten bolts to 55 Nm.

– Install exhaust system and align free of stress ⇒ page 242 .

– Electrical connections and routing ⇒ Current flow diagrams, Electrical fault finding and Fitting locations.

– Observe notes on procedure for connecting the battery ⇒ Rep. Gr. 27 .

Caution

Risk of damage to control units because of excessive voltage.

- *Never use battery charging equipment for boost starting.*

Caution

Risk of irreparable damage to injection pump.

- *Do not attempt to start the engine without first bleeding the fuel system!*

Protected by copyright. Copying for private or commercial purposes, in part or in whole, is not permitted unless authorised by AUDI AG. AUDI AG does not guarantee or accept any liability with respect to the correctness of information in this document. Copyright by AUDI AG.

– Bleed fuel system ⇒ Rep. Gr. 20 .

– Top up power steering fluid and bleed steering system ⇒ Rep. Gr. 48 .

– Check engine oil level ⇒ Maintenance ; Booklet 403 .

– Fill up with coolant ⇒ page 179 .

Note

- *Drained-off coolant may only be used again if the original cylinder head and cylinder block are re-installed.*
- *Contaminated or dirty coolant must not be used again.*

– Select “Interrogate fault memory” in “Vehicle self-diagnosis” of engine control unit ⇒ Vehicle diagnosis, testing and information system VAS 5051.

Note

Faults will have been stored in the memory because connectors have been unplugged. Therefore interrogate and erase fault memory after installing engine.

Tightening torques

Note

- *Tightening torques apply only to lightly greased, oiled, phosphated or black-finished nuts and bolts.*
- *Additional lubricant such as engine oil or gearbox oil may be used, but do not use lubricant containing graphite.*
- *Do not use degreased parts.*
- *Tolerance for tightening torques ± 15%.*

Engine/gearbox connecting bolts (manual gearbox)

Item	Bolt	Nm
1	M12x80	65
2	M12x90	65
3	M10x50 1)	45
4	M10x45	45
5	M10x135	65
6	M12x110	65
7	M12x67	65
A	Dowel sleeves for centralising	

- 1) Special bolt.

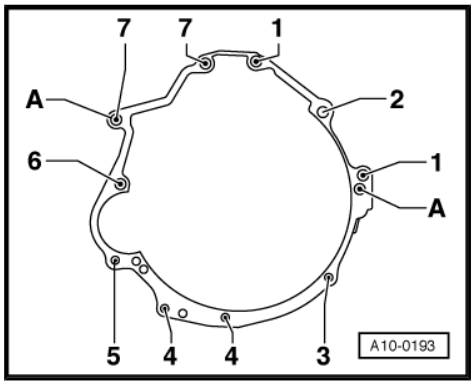

Protected by copyright. Copying for private or commercial purposes, in part or in whole, is not permitted unless authorised by AUDI AG. AUDI AG does not guarantee or accept any liability with respect to the correctness of information in this document. Copyright by AUDI AG.

Engine/gearbox connecting bolts (automatic gearbox)

Item	Bolt	Nm
1	M12x80	65
2	M12x90	65
3	M10x60	45
4	M10x45	45
5	M10x80	65
6	M12x110	65
7	M12x67	65
A	Dowel sleeves for centralising	

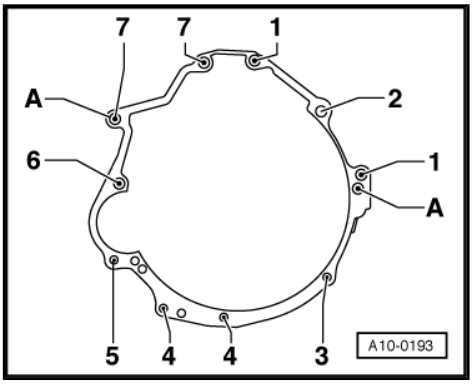

Component		Nm
Bolts/nuts	M6	10
	M8	20
	M10	45
	M12	65
Except for the following:		
Drain plug to coolant drain pipe		10
Engine mounting to subframe		25
Damper weight to subframe		23
Drive plate to torque converter M10x1		85
Torque reaction support to top section of sump		45
Stop for torque reaction support to lock carrier		55
Air conditioner compressor to bracket		22
Power steering pump to bracket for power steering pump and oil cooler		22
Poly V-belt pulley to power steering pump		22
Support for intermediate flange to intermediate flange		22
Shield for drive shaft to gearbox		25
Vibration damper to crankshaft		22
Tensioning roller for poly V-belt for A/C compressor to bracket		22

Protected by copyright. Copying or passing on to third parties or other use of this document in part or in whole, is not permitted without the consent of AUDI AG. AUDI AG does not guarantee or accept any liability with respect to the correctness of information in this document. Copyright by AUDI AG.

13 – Crankshaft group

1 Cylinder block (pulley end)

1.1 Poly V-belt drive for power steering pump, alternator and viscous fan - exploded view

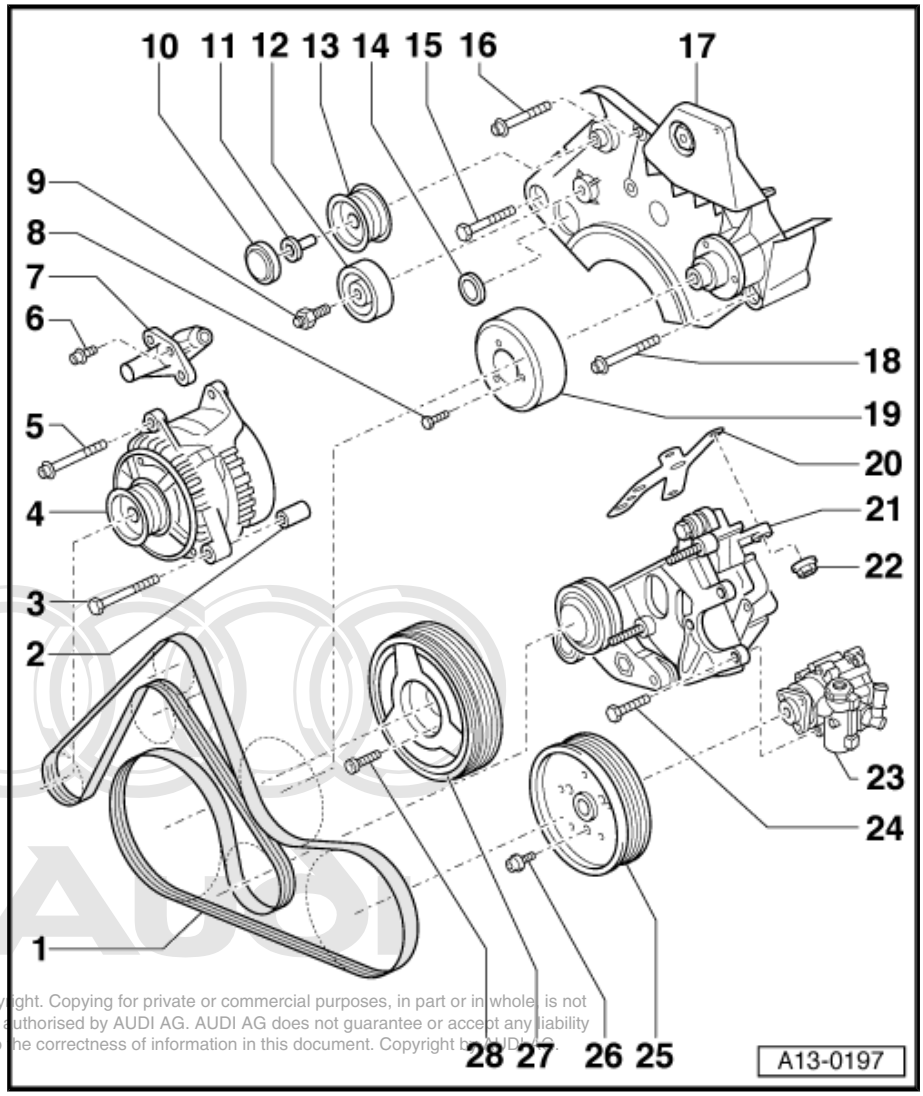

1 - Poly V-belt

- ❑ Check for wear
- ❑ Before removing, mark direction of rotation with chalk or felt-tipped pen
- ❑ Removing and installing ⇒ page 31
- ❑ Do not kink
- ❑ When installing, make sure it is properly seated on pulleys

2 - Spacer sleeve

3 - Bolt

Tightening torque ⇒ Rep. Gr. 27

4 - Alternator

- ❑ Removing and installing ⇒ Rep. Gr. 27

5 - Bolt

Tightening torque ⇒ Rep. Gr. 27

6 - Bolt

- ❑ 22 Nm

7 - Bracket

- ❑ For alternator

8 - Bolt

- ❑ 10 Nm

9 - Bolt

- ❑ 22 Nm

10 - Cover

- ❑ For idler roller

11 - Bolt

- ❑ 22 Nm

12 - Idler roller

- ❑ For poly V-belt

13 - Idler roller

- ❑ For poly V-belt

14 - Cover cap

- ❑ For access to toothed belt tensioning roller

Protected by copyright. Copying for private or commercial purposes, in part or in whole, is not permitted unless authorised by AUDI AG. AUDI AG does not guarantee or accept any liability with respect to the correctness of information in this document. Copyright by AUDI AG.

15 - Bolt
- ❑ 45 Nm

16 - Bolt
- ❑ 10 Nm

17 - Bracket
- ❑ For viscous fan
- ❑ Removing and installing ⇒ page 67
- ❑ Viscous fan bearings cannot be renewed separately ⇒ “1.11 Removing and installing viscous fan”, page 195

18 - Bolt
- ❑ 22 Nm

19 - Poly V-belt pulley
- ❑ For viscous fan
- ❑ Removing and installing ⇒ page 195

20 - Gasket
- ❑ Renew

21 - Bracket
- ❑ For power steering pump and oil cooler
- ❑ Removing and installing ⇒ page 40

22 - Nut
- ❑ 22 Nm

23 - Power steering pump
- ❑ Removing and installing ⇒ Rep. Gr. 48
- ❑ Note installation position ⇒ page 40

24 - Bolt
- ❑ 22 Nm

Protected by copyright. Copying for private or commercial purposes, in part or in whole, is not permitted unless authorised by AUDI AG. AUDI AG does not guarantee or accept any liability with respect to the correctness of information in this document. Copyright by AUDI AG.

25 - Poly V-belt pulley
- ❑ For power steering pump
- ❑ Installation position: marking “vorne” (front) faces in direction of travel.
- ❑ Removing and installing ⇒ page 40

26 - Bolt
- ❑ 22 Nm

27 - Vibration damper
- ❑ With poly V-belt pulley
- ❑ Removing and installing ⇒ page 38

28 - Bolt
- ❑ 22 Nm

1.2 Removing and installing poly V-belt for power steering pump, alternator and viscous fan

Special tools and workshop equipment required

♦ Locking pin -T10060 A-

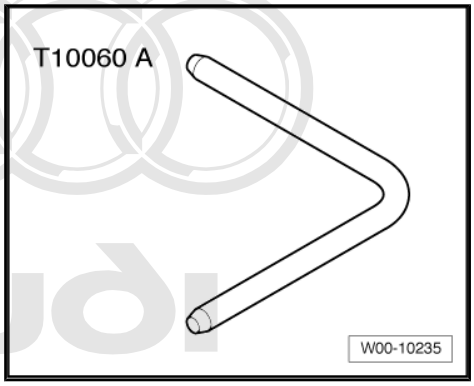

Protected by copyright. Copying for private or commercial purposes, in part or in whole, is not permitted unless authorised by AUDI AG. AUDI AG does not guarantee or accept any liability with respect to the correctness of information in this document. Copyright by AUDI AG.

Removing

– Detach caps on engine cover panel.
– Unbolt and remove engine cover panel -arrows-.
– Remove front toothed belt cover on left and right.

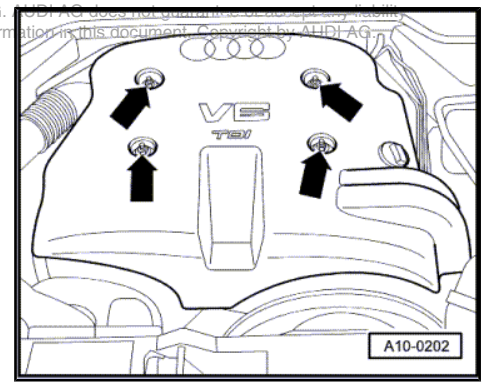

– Remove air ducts -1- and -2-.

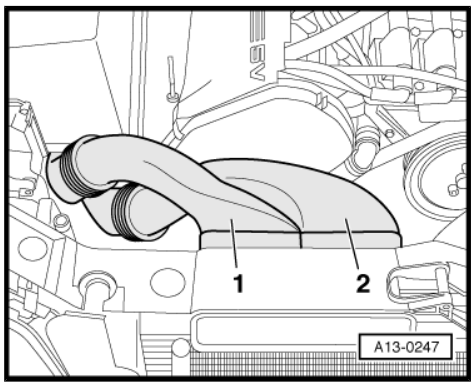

– Unscrew viscous fan (32 mm).

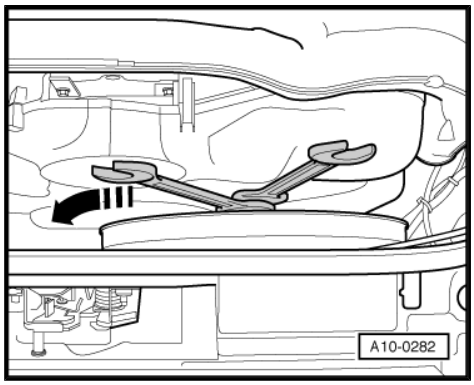

– Unscrew bolt -arrow- from front and remove air duct for viscous fan.
– Detach viscous fan with air duct.

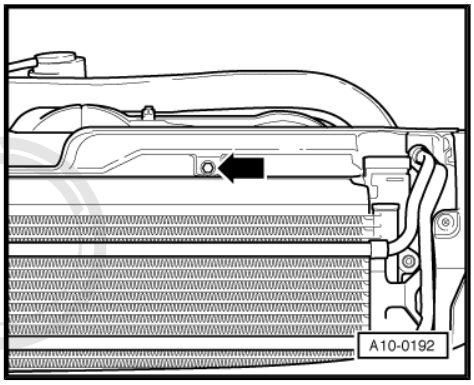

– Remove poly V-belt cover -arrows-.

Note

Watch position of spacer sleeves for poly V-belt cover.

Protected by copyright. Copying for private or commercial purposes, in part or in whole, is not permitted unless authorised by AUDI AG. AUDI AG does not guarantee or accept any liability with respect to the correctness of information in this document. Copyright by AUDI AG.

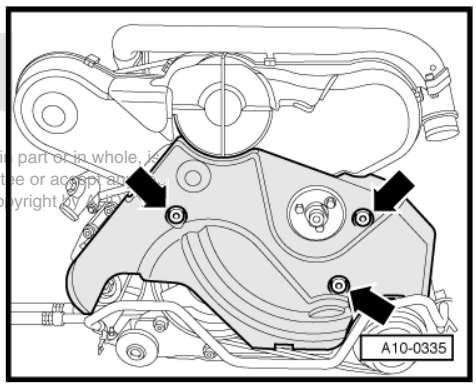

– Detach cover from tensioning roller of air conditioner compressor.

Caution

If a used belt runs in the opposite direction when it is refitted, this can cause breakage.

- *Before removing, mark direction of rotation of poly V-belt with chalk or felt-tipped pen for re-installation.*

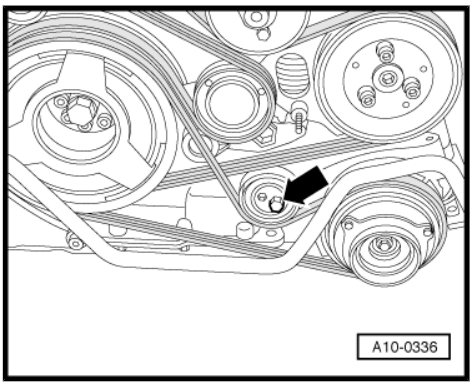

– Slacken off bolt -arrow- of tensioning roller for air conditioner compressor and detach poly V-belt for air conditioner compressor.

Caution

If a used belt runs in the opposite direction when it is refitted, this can cause breakage.

- *Before removing, mark direction of rotation of poly V-belt with chalk or felt-tipped pen for re-installation.*

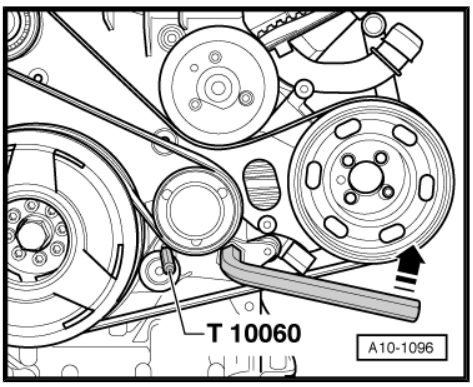

– To slacken poly V-belt, use an Allen key to turn tensioner in anti-clockwise direction -arrow- until the two bores align and locking pin -T10060- or -T10060 A- can be inserted.
– Take off poly V-belt.

Installing

Installation is carried out in the reverse order; note the following:

– Fit poly V-belt for power steering pump, alternator and viscous fan onto crankshaft pulley first, then on idler rollers and finally on tensioning roller.

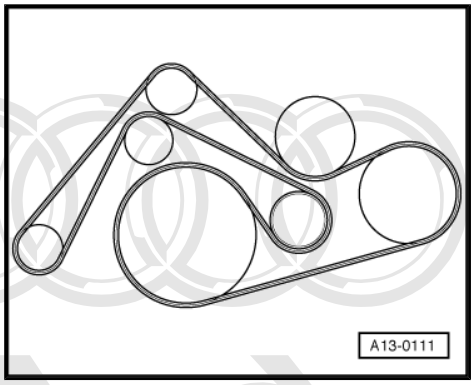

– To remove locking pin -T10060- or -T10060 A- , slacken tensioner with Allen key in anti-clockwise direction -arrow-.

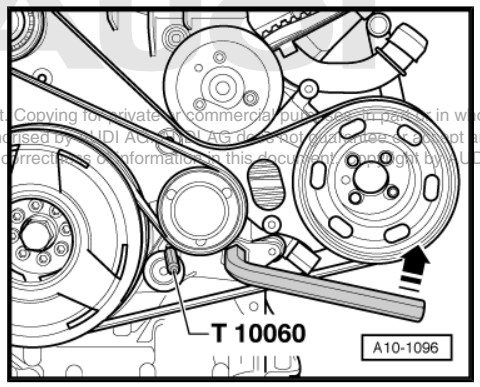

Protected by copyright. Copying for private or commercial purposes, in part or in whole, is not permitted unless authorised by AUDI AG. AUDI AG does not guarantee or assume any liability with respect to the correctness of information in this document. Copyright by AUDI AG.

– Fit poly V-belt for air conditioner compressor.

– Apply torque wrench -C- with 8 mm hexagon key (as shown) and pretension poly V-belt to 7 Nm by turning in direction of -arrow-.

– At the same time, use torque wrench to tighten bolt -A-.

– Press on cover for tensioning roller.

– Install viscous fan ⇒ page 195 .

– Start engine and check that belt runs properly.

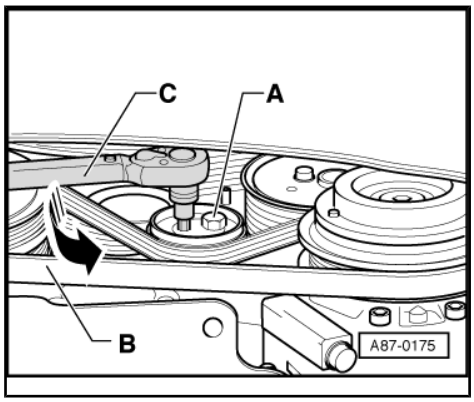

Tightening torques

Component	Nm
Tensioning roller for poly V-belt for A/C compressor to bracket	22
Poly V-belt cover to bracket	10

1.3 Poly V-belt drive for air conditioner compressor - exploded view

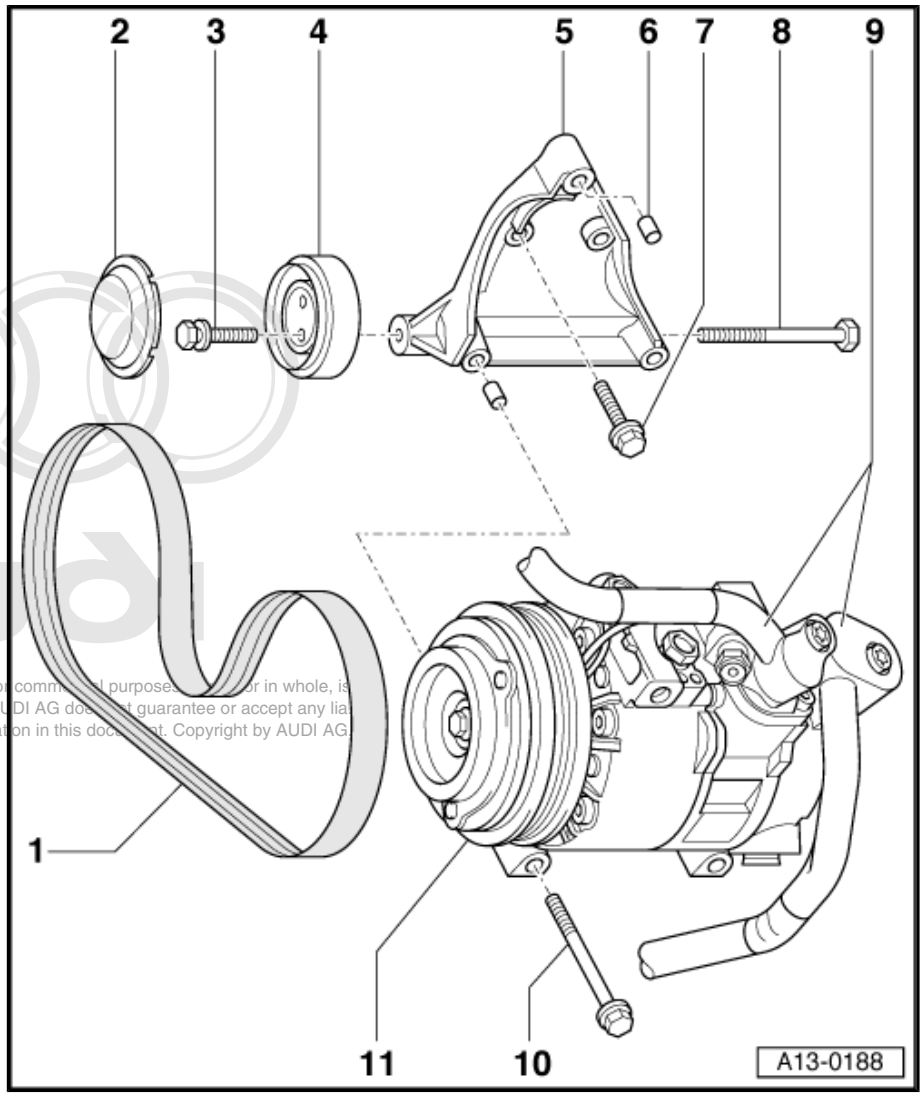

1 - Poly V-belt
- ❑ Check for wear
- ❑ Before removing, mark direction of rotation with chalk or felt-tipped pen
- ❑ Removing and installing ⇒ page 35
- ❑ When installing, make sure it is properly seated on pulleys

2 - Cover
- ❑ For tensioning roller

3 - Bolt
- ❑ 22 Nm

4 - Tensioning roller
- ❑ For poly V-belt
- ❑ Removing and installing ⇒ "1.4 Removing and installing poly V-belt for A/C compressor", page 35

Protected by copyright. Copying for private or commercial purposes, in part or in whole, is permitted unless authorised by AUDI AG. AUDI AG does not guarantee or accept any liability with respect to the correctness of information in this document. Copyright by AUDI AG.

5 - Bracket
- ❑ For AC compressor

6 - Dowel sleeve
- ❑ 2x
- ❑ Check for correct seating in bracket

7 - Bolt
- ❑ 22 Nm

8 - Bolt
- ❑ 22 Nm

9 - Refrigerant lines
- ❑ Do not unbolt or disconnect

10 - Bolt
- ❑ 22 Nm

11 - Air conditioner compressor
- ❑ After detaching, secure compressor to subframe using wire or similar. Do not leave it suspended from refrigerant pipes.
- ❑ Do not unscrew or disconnect refrigerant hoses or pipes.
- ❑ When installing check dowel sleeves -item 6-

1.4 Removing and installing poly V-belt for A/C compressor

Special tools and workshop equipment required

♦ Locking pin -T10060 A-

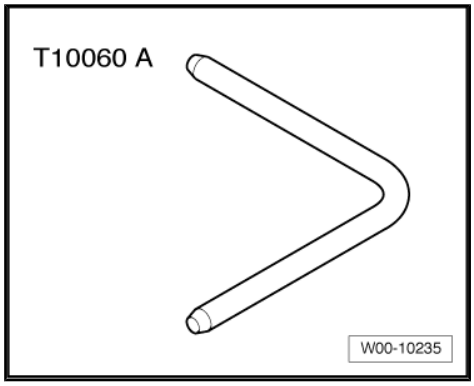

Removing

– Detach caps on engine cover panel.
– Unbolt and remove engine cover panel -arrows-.
– Remove front toothed belt cover on left and right.

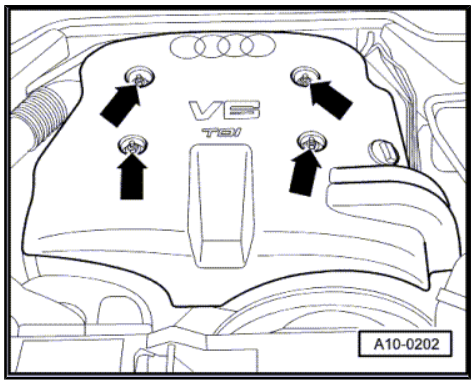

– Remove air ducts -1- and -2-.

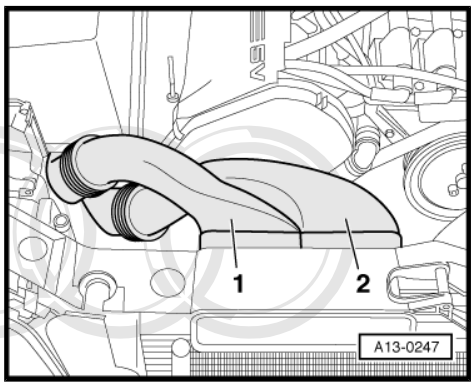

– Unscrew viscous fan (32 mm).

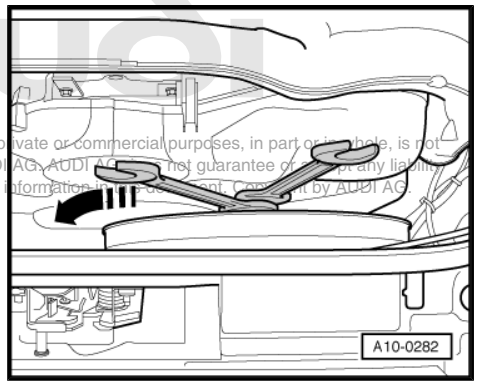

Protected by copyright. Copying for private or commercial purposes, in part or in whole, is not permitted unless authorised by AUDI AG. AUDI AG does not guarantee or assume any liability with respect to the correctness of information in this document. Copyright by AUDI AG.

– Unscrew bolt -arrow- from front and remove air duct for viscous fan.
– Detach viscous fan with air duct.

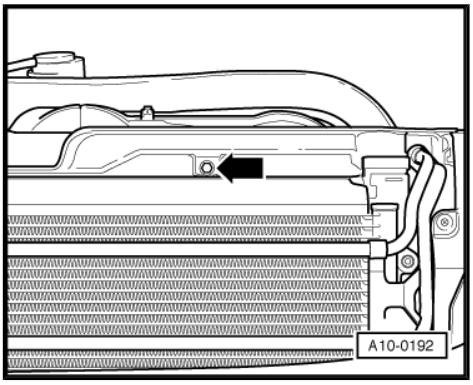

– Remove poly V-belt cover -arrows-.

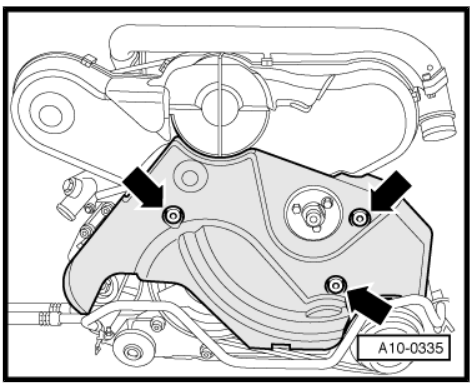

Note

Watch position of spacer sleeves for poly V-belt cover.

– Detach cover from tensioning roller of air conditioner compressor.

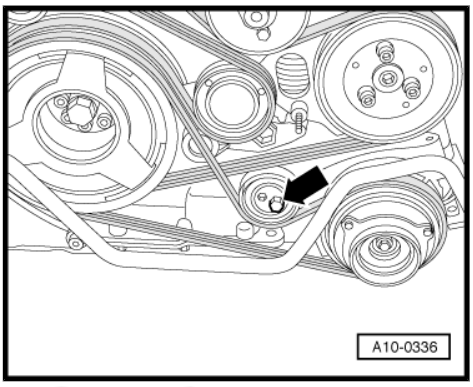

Caution

If a used belt runs in the opposite direction when it is refitted, this can cause breakage.

- ***Before removing, mark direction of rotation of poly V-belt with chalk or felt-tipped pen for re-installation.***

– Slacken off bolt -arrow- of tensioning roller for air conditioner compressor and detach poly V-belt for air conditioner compressor.

Protected by copyright. Copying for private or commercial purposes, in part or in whole, is not permitted unless authorised by AUDI AG. AUDI AG does not guarantee or accept any liability with respect to the correctness of information in this document. Copyright by AUDI AG.

Installing

Installation is carried out in the reverse order; note the following:

– Fit poly V-belt for air conditioner compressor.

– Apply torque wrench -C- with 8 mm hexagon key (as shown) and pretension poly V-belt to 7 Nm by turning in direction of -arrow-.

– At the same time, use torque wrench to tighten bolt -A-.

– Press on cover for tensioning roller.

– Install viscous fan ⇒ page 195 .

– Start engine and check that belt runs properly.

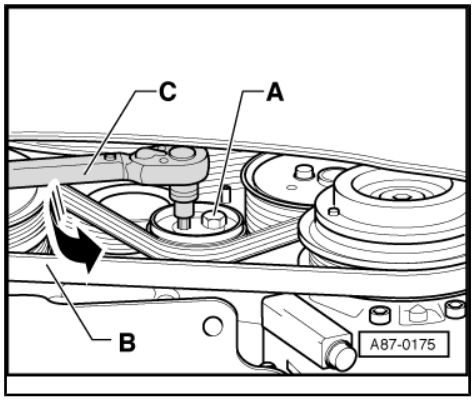

Tightening torques

Component	Nm
Tensioning roller for poly V-belt for A/C compressor to bracket	22
Poly V-belt cover to bracket	10

1.5 Removing and installing vibration damper

Removing

Protected by copyright. Copying for private or commercial purposes, in part or in whole, is not permitted unless authorised by AUDI AG. AUDI AG does not guarantee or accept any liability with respect to the correctness of information in this document. Copyright by AUDI AG.

– Remove poly V-belt for power steering pump, alternator and viscous fan ⇒ page 31 .

– Remove 8 bolts -1- and detach vibration damper.

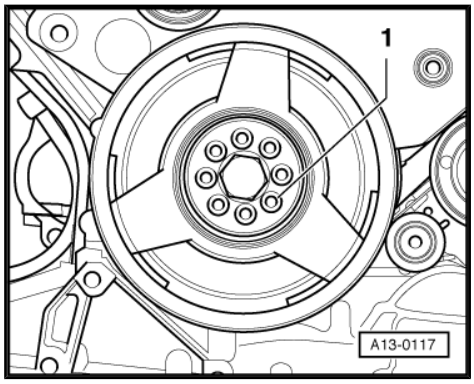

Note

Central bolt does not have to be loosened when removing vibration damper.

Installing

Installation is carried out in the reverse order; note the following:

– On installation, make sure notch -arrow- in vibration damper is aligned with locating lug on toothed belt sprocket.

– Install poly V-belt for power steering pump, alternator and viscous fan ⇒ page 31 .

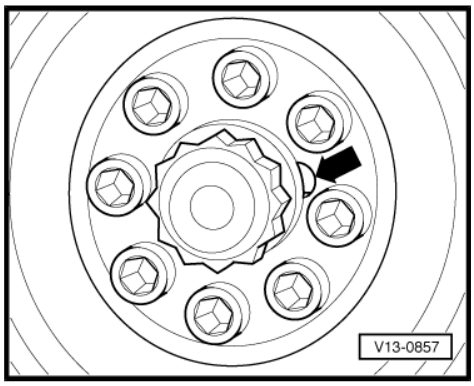

Tightening torque

Component	Nm
Vibration damper to crankshaft	22

1.6 Bracket for power steering pump and oil cooler - exploded view

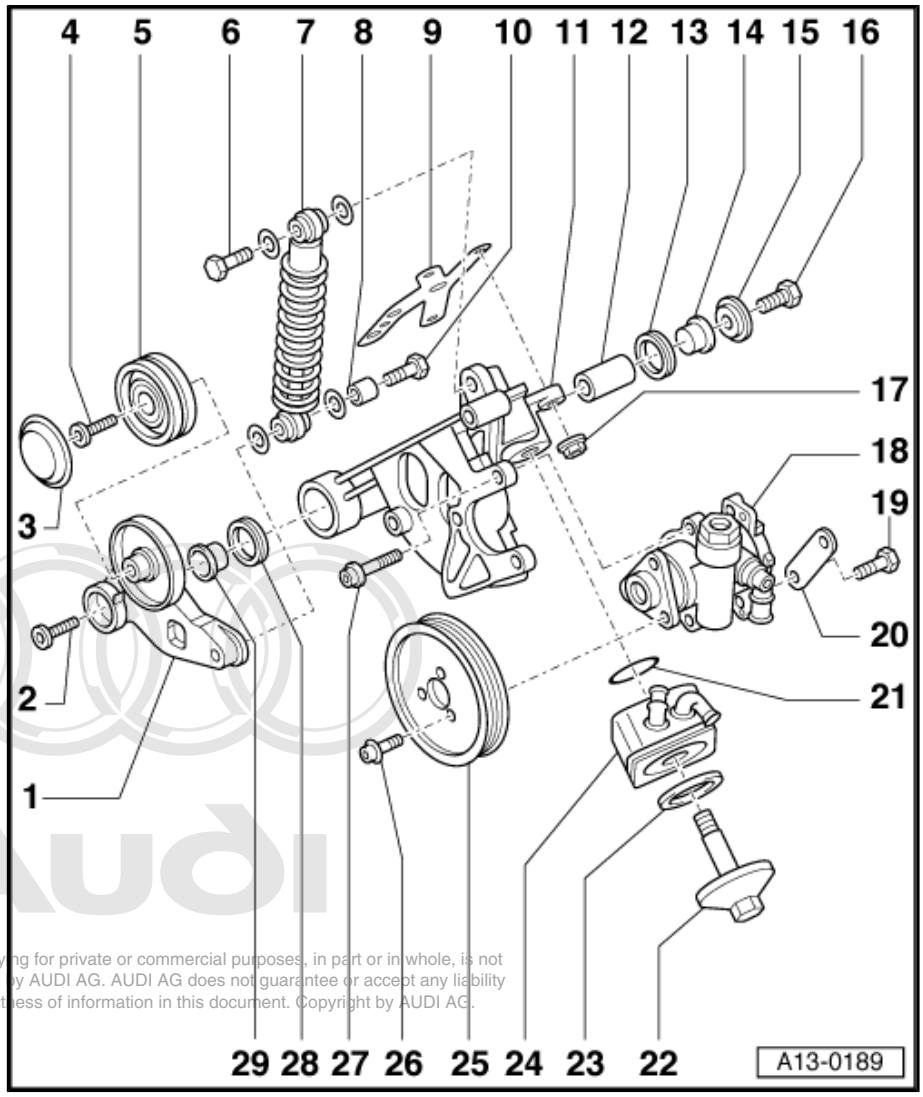

1 - Lever
- ❑ For tensioner

2 - Fitted bolt
- ❑ 30 Nm

3 - Cover
- ❑ For tensioning roller

4 - Fitted bolt
- ❑ 22 Nm

5 - Tensioning roller
- ❑ For poly V-belt

6 - Bolt
- ❑ 22 Nm

7 - Spring/damper

8 - Sleeve

9 - Gasket
- ❑ Renew

10 - Bolt
- ❑ 22 Nm

11 - Bracket for power steering pump and oil cooler
- ❑ Removing and installing ⇒ page 40

12 - Pin

13 - Seal
- ❑ Renew

Protected by copyright. Copying for private or commercial purposes, in part or in whole, is not permitted unless authorised by AUDI AG. AUDI AG does not guarantee or accept any liability with respect to the correctness of information in this document. Copyright by AUDI AG.

14 - Mounting bush

15 - Washer
- ❑ Note installation position

16 - Bolt
- ❑ 30 Nm

17 - Nut
- ❑ 22 Nm

18 - Power steering pump
- ❑ Removing and installing ⇒ Rep. Gr. 48
- ❑ Note installation position ⇒ page 40

19 - Bolt
- ❑ 22 Nm

20 - Bracket

21 - Seal
- ❑ Renew
- ❑ Engage in lugs on oil cooler

22 - Bolt
- ❑ 25 Nm

23 - Seal

- ❑ Renew

24 - Oil cooler

- ❑ See note ⇒ page 141
- ❑ Removing and installing ⇒ page 171

25 - Poly V-belt pulley

- ❑ For power steering pump
- ❑ Installation position: shoulder faces to front of vehicle

26 - Bolt

- ❑ 22 Nm

27 - Bolt

- ❑ 22 Nm

28 - Seal

- ❑ Renew

Protected by copyright. Copying for private or commercial purposes, in part or in whole, is not permitted unless authorised by AUDI AG. AUDI AG does not guarantee or accept any liability with respect to the correctness of information in this document. Copyright by AUDI AG.

29 - Mounting bush

- ❑ Removing and installing ⇒ page 43

1.7 Removing and installing bracket for power steering pump and oil cooler

Special tools and workshop equipment required

- ♦ Pin wrench -3212-

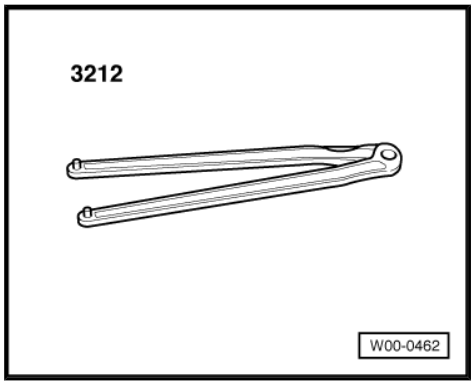

- ♦ Drip tray for workshop hoist -VAS 6208-

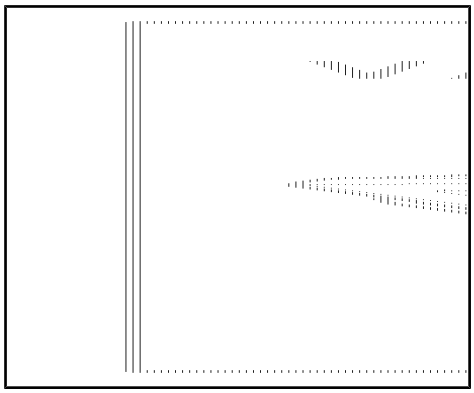

Removing

– Remove poly V-belt ⇒ page 31 .

– Unplug electrical connector -1- at intake manifold pressure sender -G71- .

– Remove air hose -2- leading to intake manifold.

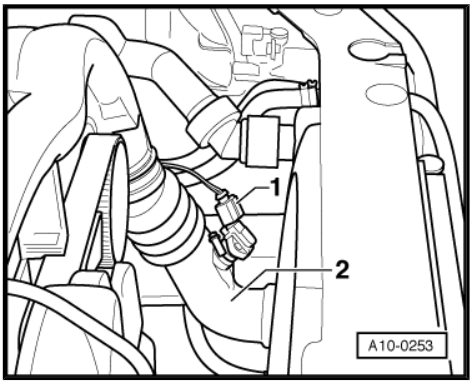

– Unbolt poly V-belt pulley at power steering pump -arrows-, using pin wrench -3212- as a counterhold.

– Unbolt power steering pump from bracket and tie it up to longitudinal member.

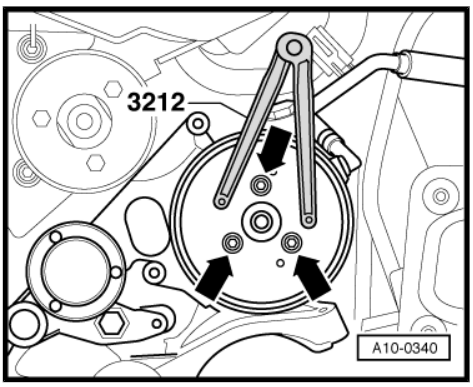

Note

Pipes of power steering pump remain connected.

– Drain coolant ⇒ page 177 .

WARNING

Risk of injury caused by refrigerant.

- *The air conditioner refrigerant circuit must not be opened.*

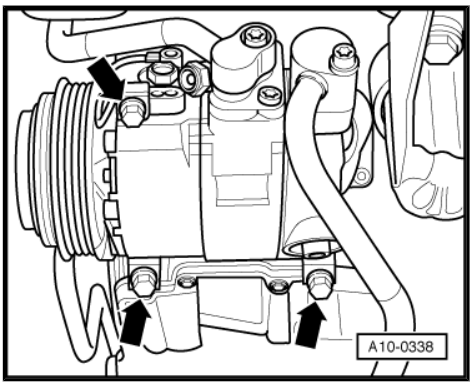

– Unbolt air-conditioner compressor from bracket -arrows-.

Caution

Danger of damage to refrigerant lines and hoses.

- *Do NOT stretch, kink or bend refrigerant lines and hoses.*

– Tie air conditioner compressor up to side at body longitudinal member (leave hoses connected).

Protected by copyright. Copying for private or commercial purposes, in part or in whole, is not permitted unless authorised by AUDI AG. AUDI AG does not guarantee or accept any liability with respect to the correctness of information in this document. Copyright by AUDI AG.

– Unbolt bracket for A/C compressor -arrows-.

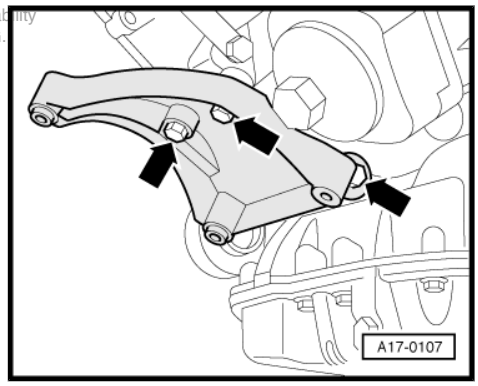

– Slacken hose clips -arrows- and push clips back along hoses.
– Place drip tray for workshop hoist -VAS 6208- beneath engine.
– Detach rear hose from oil cooler.
– Unfasten bolt connections -1 ... 4- and detach bracket with oil cooler.

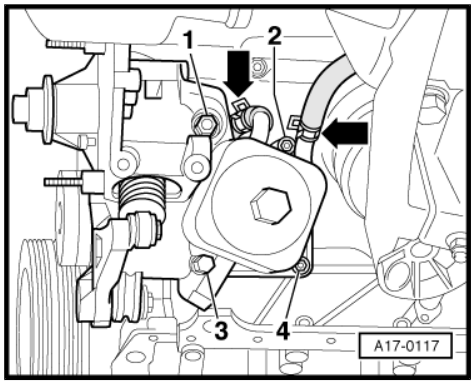

Note

Caution: oil and coolant will come out.

Installing

Installation is carried out in the reverse order; note the following:

Note

- *Renew gaskets and seals.*
- *Secure all hose connections with the correct type of hose clips (same as original equipment) ⇒ Electronic parts catalogue .*

– Bolt on power steering pump at holes -B- on bracket -A-.

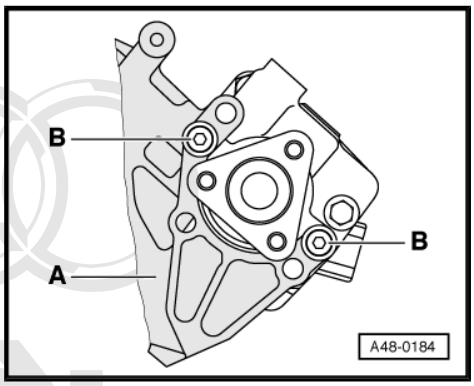

– Install poly V-belt pulley for power steering pump.
• Installation position: marking “vorne” (front) faces in direction of travel.
– Counterhold using pin wrench -3212- when tightening bolts -arrows-.
– Install poly V-belt for power steering pump, alternator and viscous fan ⇒ page 31 ; install air conditioner compressor ⇒ Rep. Gr. 87 .
– Fill up with coolant ⇒ page 179 .

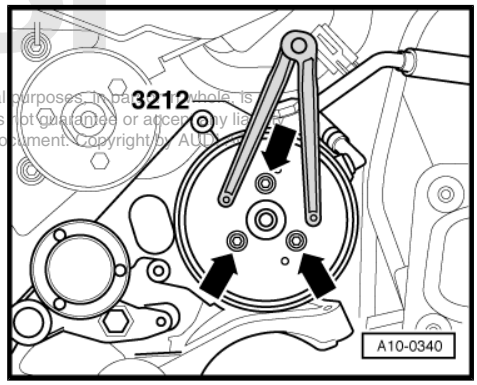

Protected by copyright. Copying for private or commercial purposes, in part or whole, is permitted unless authorised by AUDI AG. AUDI AG does not guarantee or accept any liability with respect to the correctness of information in this document. Copyright by AUDI AG.

Tightening torques

Component	Nm
Bracket for power steering pump and oil cooler to cylinder block	22
Bracket for air conditioner compressor to bracket for power steering pump and oil cooler	22
Air conditioner compressor to bracket	22
Power steering pump to bracket for power steering pump and oil cooler	22
Pulley to power steering pump	22

1.8 Removing and installing mounting bushes on bracket for power steering pump and oil cooler

Special tools and workshop equipment required

- Torque wrench -V.A.G 1331- with 13 mm attachment (commercially available)

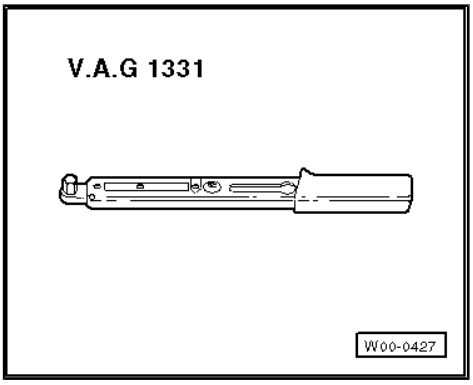

- Assembly tool -T40104-

Protected by copyright. Copying for private or commercial purposes, in part or in whole, is not permitted unless authorised by AUDI AG. AUDI AG does not guarantee or accept any liability with respect to the correctness of information in this document. Copyright by AUDI AG.

Removing

– Detach caps on engine cover panel.

– Unbolt and remove engine cover panel -arrows-.

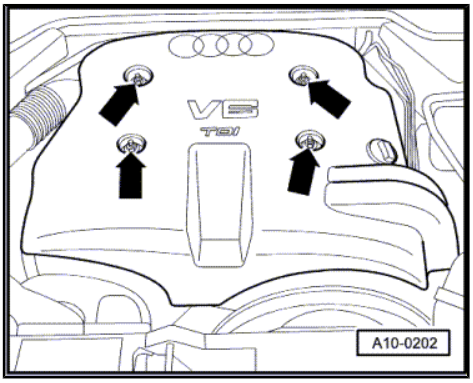

– Unscrew viscous fan (32 mm).

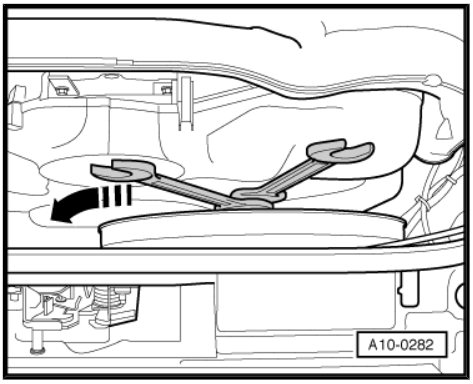

– Unscrew bolt -arrow- from front and remove air duct for viscous fan.

– Detach viscous fan with air duct.

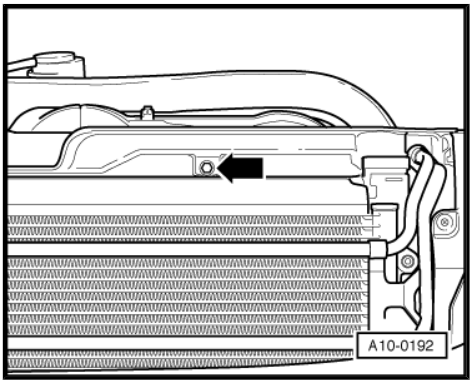

– Release fasteners -arrows- and remove toothed belt cover (left and right).

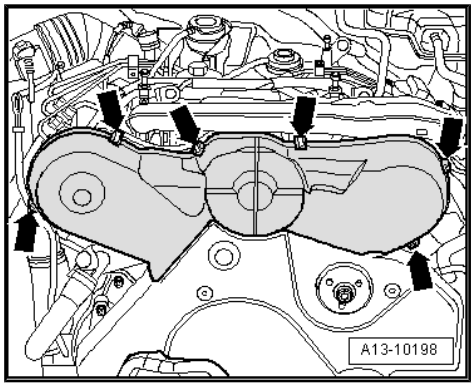

– Remove poly V-belt cover -arrows-.

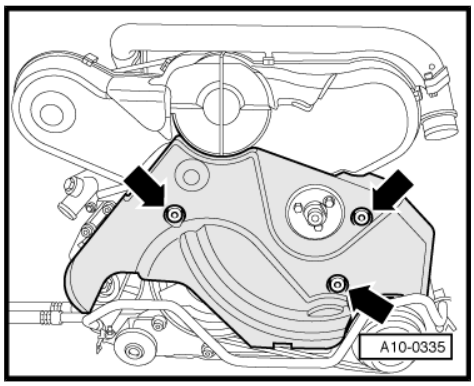

Note

Watch position of spacer sleeves for poly V-belt cover.

– Remove bolts -arrows- securing exhaust pipe for auxiliary/ supplementary heater to noise insulation.

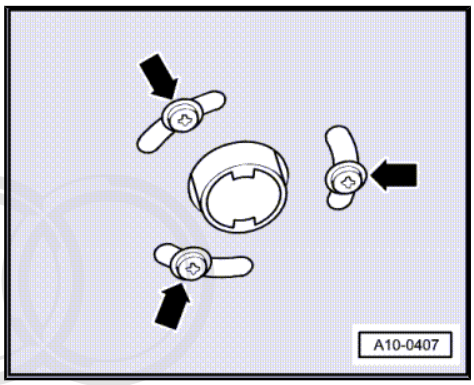

– Open quick-release fasteners -1- and remove noise insulation (front).

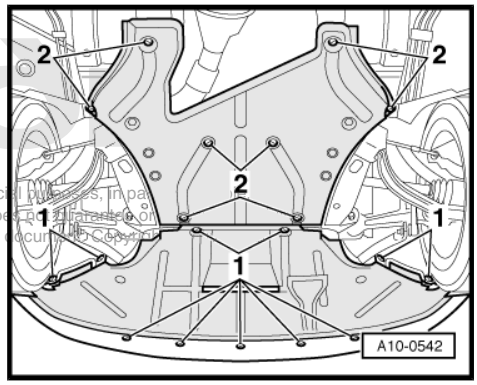

Protected by copyright. Copying for private or commercial purposes, in part, is not permitted unless authorised by AUDI AG. AUDI AG does not guarantee or assume liability with respect to the correctness of information in this document.

– Detach cover from tensioning roller of air conditioner compressor.

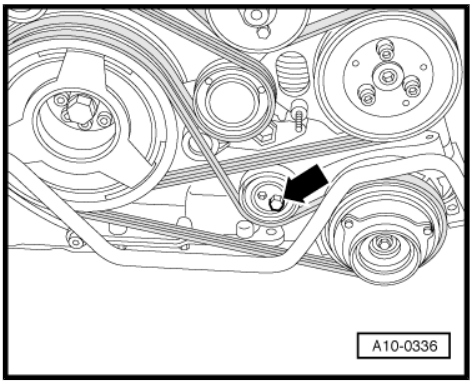

> **Caution**
>
> *If a used belt runs in the opposite direction when it is refitted, this can cause breakage.*
>
> ♦ *Before removing, mark direction of rotation of poly V-belt with chalk or felt-tipped pen for re-installation.*

– Slacken off bolt -arrow- of tensioning roller for air conditioner compressor and detach poly V-belt for air conditioner compressor.

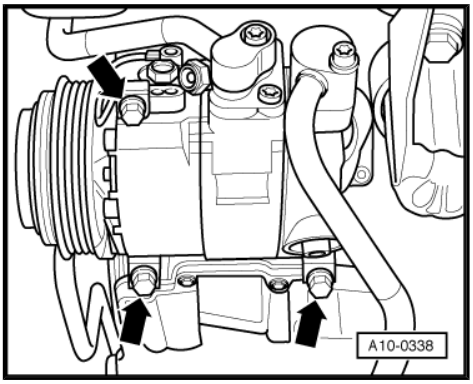

> **WARNING**
>
> *Risk of injury caused by refrigerant.*
>
> ♦ *The air conditioner refrigerant circuit must not be opened.*

– Unbolt air-conditioner compressor from bracket -arrows-.

> **Caution**
>
> *Danger of damage to refrigerant lines and hoses.*
>
> ♦ *Do NOT stretch, kink or bend refrigerant lines and hoses.*

– Tie air conditioner compressor up to side at body longitudinal member (leave hoses connected).

– Unbolt bracket for A/C compressor -arrows-.

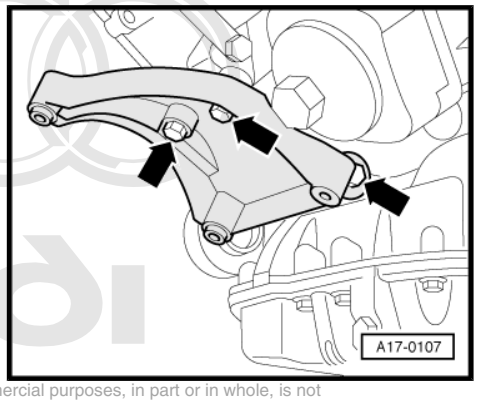

Protected by copyright. Copying for private or commercial purposes, in part or in whole, is not permitted unless authorised by AUDI AG. AUDI AG does not guarantee or accept any liability with respect to the correctness of information in this document. Copyright by AUDI AG.

Caution

If a used belt runs in the opposite direction when it is refitted, this can cause breakage.

- *Before removing, mark direction of rotation of poly V-belt with chalk or felt-tipped pen for re-installation.*

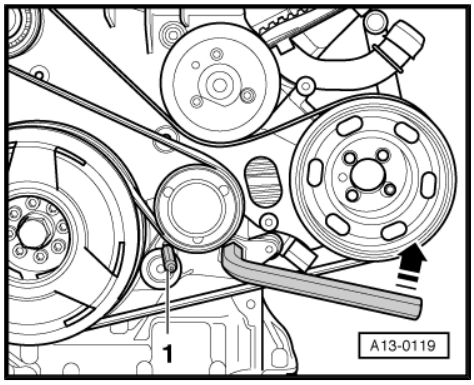

– To slacken poly V-belt, turn tensioner in anti-clockwise direction -arrow- using Allen key and detach poly V-belt for power steering pump, alternator and viscous fan.

Note

Disregard -item 1-.

– Remove dowel bolt -arrow-.

– Pivot lever for tensioner to one side.

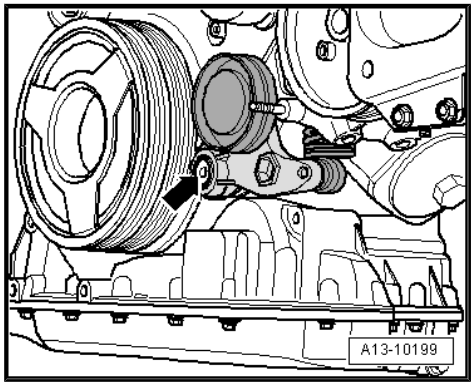

– Pull seal -arrow- off bracket for power steering pump and oil cooler.

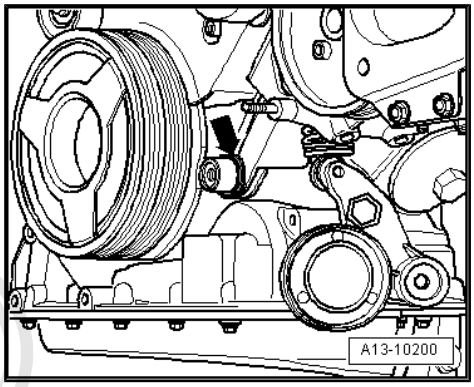

– Before continuing, check whether the mounting pin -arrow- can be turned or moved in the bracket for power steering pump and oil cooler.

Note

If the mounting pin is seized, it must be released by suitable means before proceeding further.

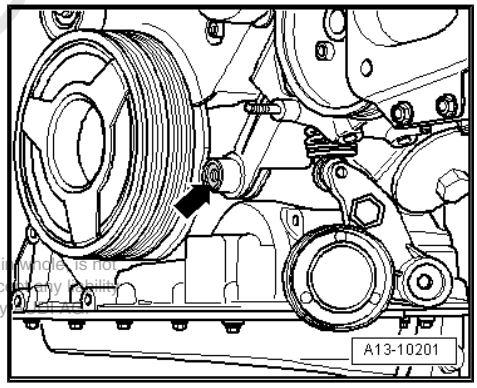

Protected by copyright. Copying for private or commercial purposes, in part or in whole, is not permitted unless authorised by AUDI AG. AUDI AG does not guarantee or accept any liability with respect to the correctness of information in this document. Copyright by AUDI AG.

– Screw bolt -T40104/7- into mounting pin from the front.
– Tighten bolt -T40104/7- and at the same time counterhold rear bolt using a flat ring spanner -1-.
• Continue tightening bolt -T40104/7- until the head of the rear bolt shears off.
– Remove bolt head, washer and seal.
– Pull mounting pin out of bracket.
– Clamp mounting pin in vice and unscrew bolt -T40104/7- .

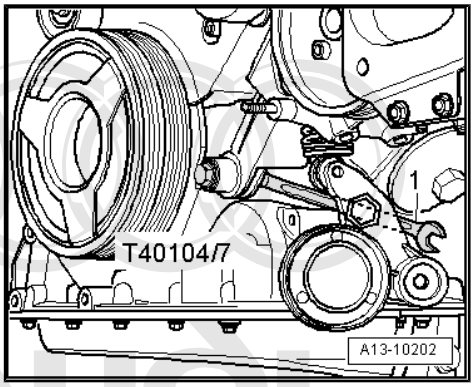

Pulling out front mounting bush:

– Insert internal puller -T40104/1- into drilling in bracket for power steering pump and oil cooler until puller engages behind mounting bush in drilling.
– Screw spreader pin of internal puller in just far enough by hand until the puller has a secure grip on the front mounting bush.

Protected by copyright. Copying for private or commercial purposes, in part or in whole, is not permitted unless authorised by AUDI AG. AUDI AG does not guarantee or assume any liability with respect to the correctness of information in this document. Copyright by AUDI AG.

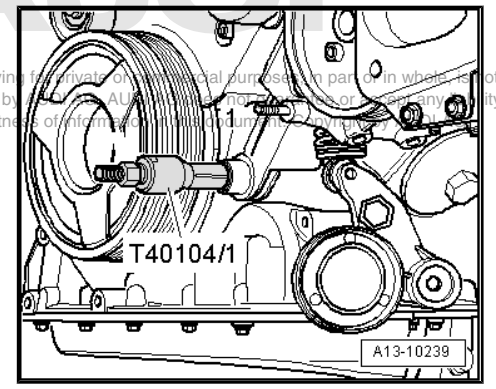

Note

If the jaws of the internal puller are spread too far, the puller will damage the drilling in the bracket when the bush is pulled out.

– Move internal puller to horizontal position and slide thrust sleeve -T10104/2- onto puller.
– Screw nut from -T40104/1- onto thread of spreader pin and pull front mounting bush out of bracket for power steering pump and oil cooler by screwing down nut.

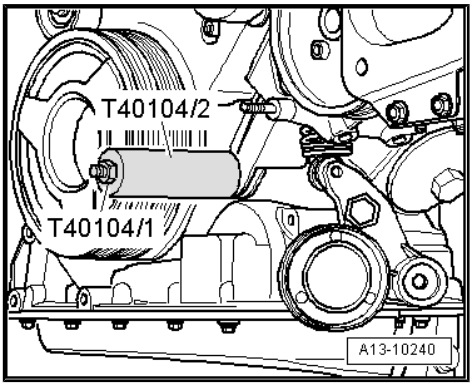

Driving out rear mounting bush:

– Insert pin -T40104/3- into drilling in bracket for power steering pump and oil cooler.
• The thread of the pin points in direction of travel.
– Drive out rear mounting bush towards rear using pin -T40104/3- .
– Pull out pin -T40104/3- again (screw M8 bolt into thread of pin).

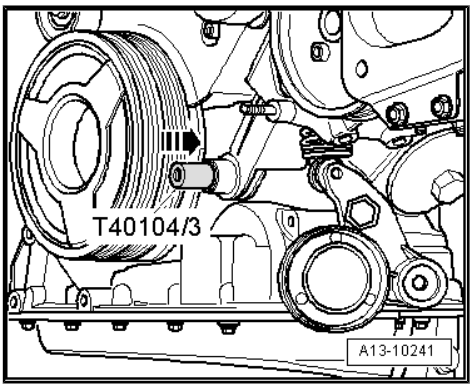

Installing

– Clean drilling and contact surfaces for seals on bracket for power steering pump and oil cooler.

– Pull rear mounting bush -item 1- into bracket for power steering pump and oil cooler, as shown in illustration.

• Slot in mounting bush faces downwards.

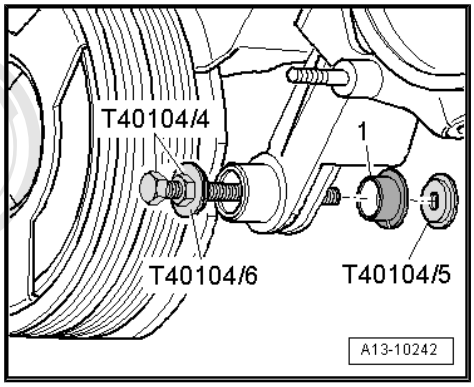

– Pull front mounting bush -item 1- into bracket for power steering pump and oil cooler, as shown in illustration.

• Slot in mounting bush faces downwards.

Protected by copyright. Copying for private or commercial purposes, in part or in whole, is not permitted unless authorised by AUDI AG. AUDI AG does not guarantee or accept any liability with respect to the correctness of information in this document. Copyright by AUDI AG.

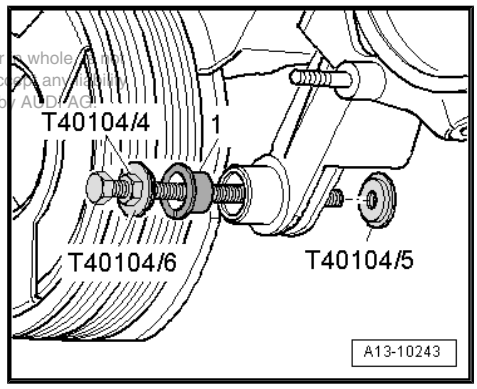

Install components of mounting as shown in illustration:

1 - Seal (front)
- Sealing lip faces in direction of travel.

2- Mounting pin
- Do not grease
- Larger opening faces in direction of travel.

3 - Rear seal
- Sealing lip faces in direction of travel.

4 - Washer
- Shoulder faces in direction of travel.
- Press seal onto washer.

5 - Rear bolt
- Hand-tighten.

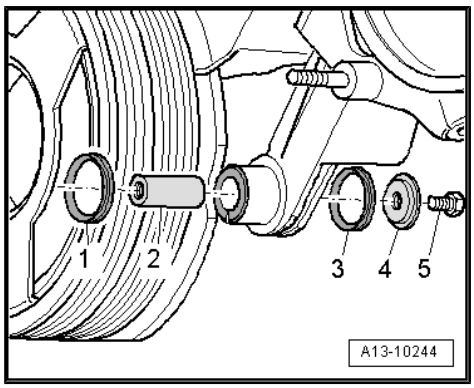

Tightening rear bolt to specified torque:

Note

The rear bolt on the mounting pin can only be reliably tightened to the specified torque using the method described below:

– Screw bolt with nut -T40104/4- approx. 10 turns into mounting pin.

– Lock nut -T40104/4- against mounting pin in this position (to do so, use ring spanner -1- to counterhold rear bolt).

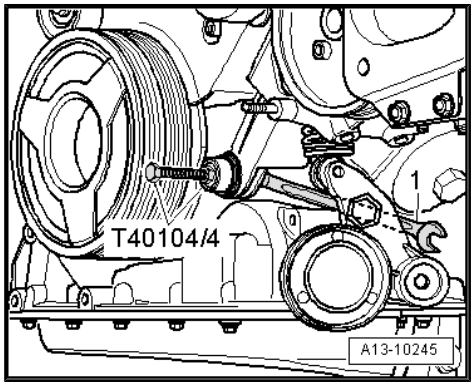

– Apply torque wrench -V.A.G 1331- with 13 mm attachment (commercially available) -item 2- to lock nut and tighten rear bolt to 30 Nm (counterhold rear bolt with ring spanner -1-).

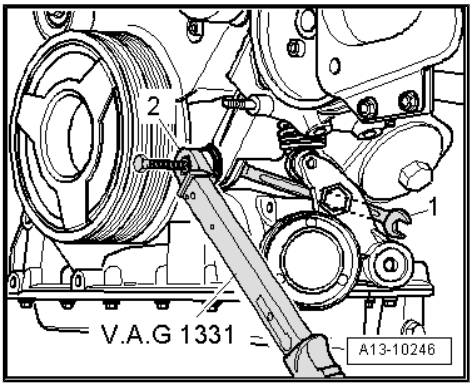

– Fit lever for tensioner onto bracket for power steering pump and oil cooler.

– Tighten dowel bolt -2- to 30 Nm (to do so, counterhold rear bolt using ring spanner -1-).

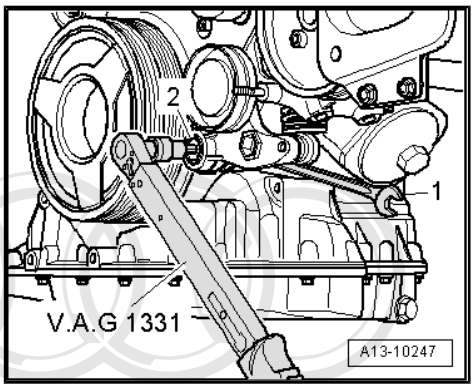

Remaining installation steps are carried out in reverse sequence; note the following:

– Install air conditioner compressor ⇒ Rep. Gr. 87 .

– Install viscous fan ⇒ page 195 .

– Install poly V-belt for power steering pump, alternator and viscous fan ⇒ page 31 .

Tightening torques

Component		Nm
Bracket for air conditioner compressor to:	Bracket for power steering pump and oil cooler	22
	Sump (top section)	22
Torque reaction support to top section of sump		45

Protected by copyright. Copying for private or commercial purposes, in part or in whole, is not permitted unless authorised by AUDI AG. AUDI AG does not guarantee or accept any liability with respect to the correctness of information in this document. Copyright by AUDI AG.

1.9 Toothed belt drive for camshafts - exploded view

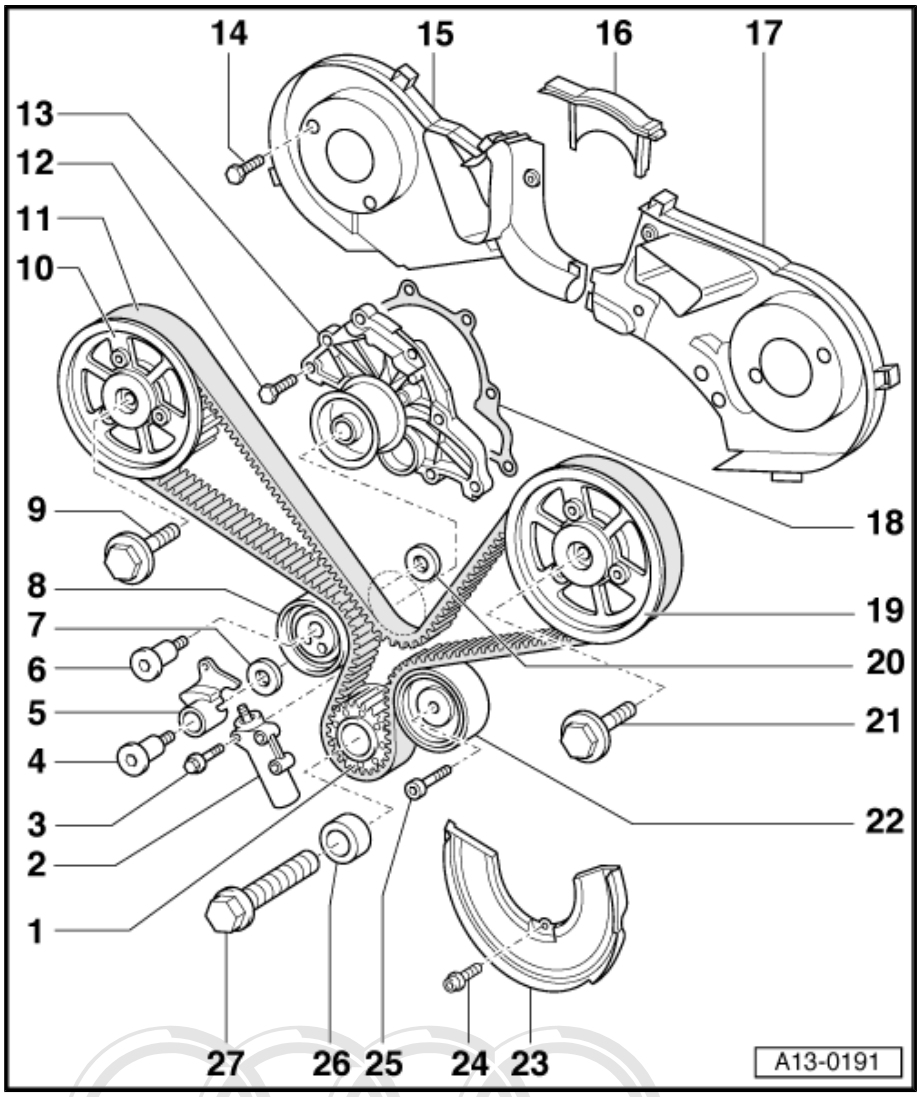

1 - Crankshaft sprocket

- ❑ Contact surface between sprocket and crankshaft must be free of oil
- ❑ Can only be installed in one position

2 - Tensioner for toothed belt

3 - Bolt

- ❑ 10 Nm

4 - Bolt

- ❑ 42 Nm

5 - Tensioning lever

- ❑ Fit washer -item 7- underneath

6 - Bolt

- ❑ 42 Nm

7 - Washer

- ❑ For tensioning lever

8 - Tensioning roller

- ❑ Fit washer -item 20- underneath

9 - Flange bolt

- ❑ Use counter-hold tool -3036- when loosening and tightening
- ❑ 75 Nm

10 - Camshaft sprocket

- ❑ For inlet camshaft
- ❑ To remove and install, first remove toothed belt from camshaft sprockets ⇒ page 53
- ❑ Remove using two-arm puller -T40001-

11 - Toothed belt

- ❑ Before removing, mark direction of rotation with chalk or felt-tipped pen
- ❑ Check for wear
- ❑ Removing ⇒ page 62
- ❑ Installing (adjusting valve timing) ⇒ page 68

12 - Bolt

- ❑ 10 Nm

Protected by copyright. Copying for private or commercial purposes, in part or in whole, is not permitted unless authorised by AUDI AG. AUDI AG does not guarantee or accept any liability with respect to the correctness of information in this document. Copyright by AUDI AG.

13 - Coolant pump

- ❑ Removing and installing ⇒ page 182

14 - Bolt

- ❑ 10 Nm

15 - Toothed belt cover (rear right)

16 - Toothed belt cover (rear centre)

17 - Toothed belt cover (rear left)

18 - Gasket

- ❑ Renew

19 - Camshaft sprocket

- ❑ For inlet camshaft
- ❑ To remove and install, first remove toothed belt from camshaft sprockets ⇒ page 53
- ❑ Remove using two-arm puller -T40001-

20 - Washer

- ❑ For tensioning roller

21 - Flange bolt

- ❑ Use counter-hold tool -3036- when loosening and tightening
- ❑ 75 Nm

Protected by copyright. Copying for private or commercial purposes, in part or in whole, is not permitted unless authorised by AUDI AG. AUDI AG does not guarantee or accept any liability with respect to the correctness of information in this document. Copyright by AUDI AG.

22 - Idler roller

23 - Toothed belt cover (bottom)

- ❑ Unbolt vibration damper prior to removing

24 - Bolt

- ❑ 10 Nm

25 - Bolt

- ❑ 45 Nm

26 - Spacer sleeve

27 - Bolt

- ❑ Renew
- ❑ Do not lubricate with oil
- ❑ Use locking pin -3242- when loosening and tightening
- ❑ 200 Nm + turn 180° further

1.10 Toothed belt drive for injection pump - exploded view

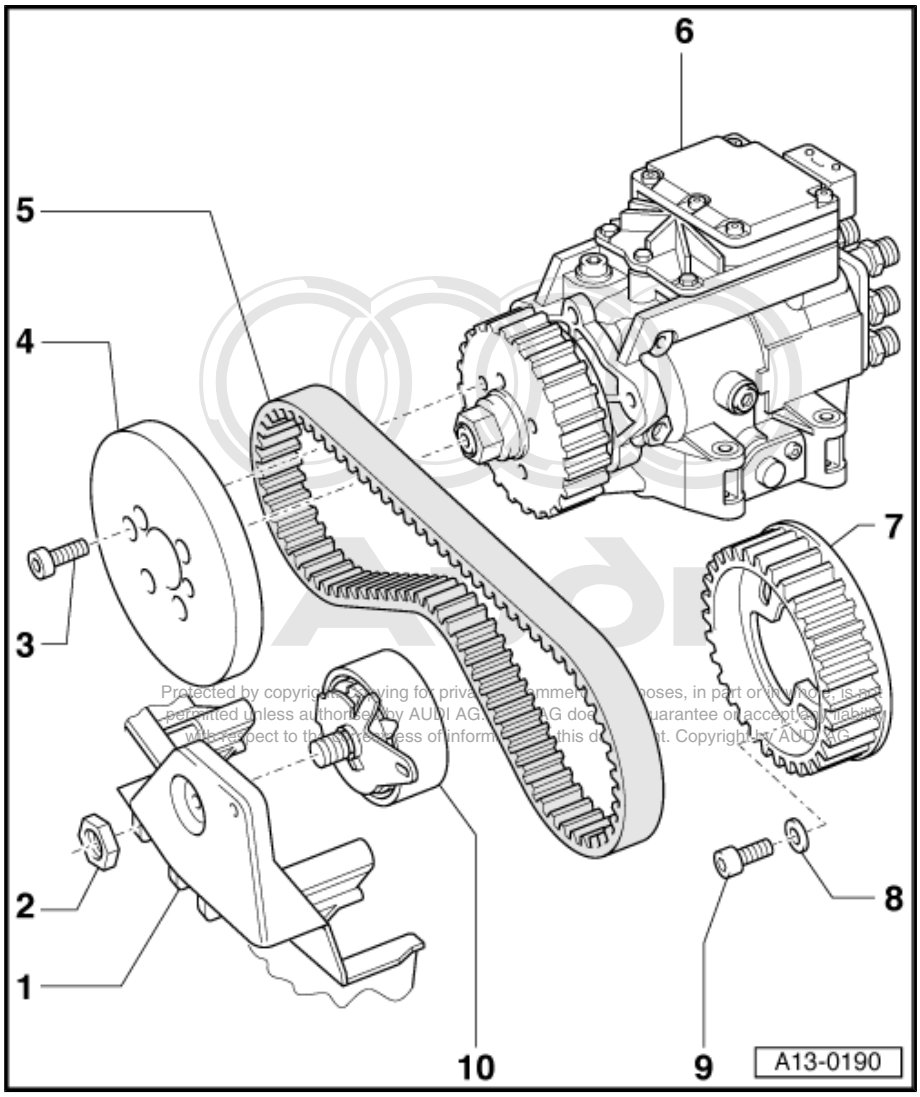

1 - Bracket
- ❑ For viscous fan
- ❑ Removing and installing ⇒ page 67

2 - Nut
- ❑ 36 Nm

3 - Bolt
- ❑ 22 Nm

4 - Vibration damper
- ❑ For injection pump sprocket

5 - Toothed belt
- ❑ For injection pump
- ❑ Before removing, mark direction of rotation with chalk or felt-tipped pen. If the belt runs in the opposite direction when it is refitted, this can cause breakage
- ❑ Check for wear
- ❑ Removing ⇒ page 62
- ❑ Fitting, tensioning ⇒ page 68

6 - Injection pump
- ❑ Removing and installing ⇒ Rep. Gr. 23
- ❑ Dynamically checking and adjusting commencement of injection ⇒ Rep. Gr. 23

7 - Injection pump sprocket
- ❑ With thrust collar on one or both sides depending on version
- ❑ Set to centre of elongated holes when installing
- ❑ Dynamically checking and adjusting commencement of injection after installation ⇒ Rep. Gr. 23

8 - Washer

9 - Bolt
- ❑ 22 Nm

10 - Tensioning roller
- ❑ For injection pump toothed belt

1.11 Removing toothed belt from camshaft sprockets

Special tools and workshop equipment required

- Locking pin -T40011-
- Counter-hold tool -3036-
- Socket (22 mm) -3078-
- Locking pin -3242-
- Diesel injection pump locking pin -3359-
- Camshaft holder -3458-

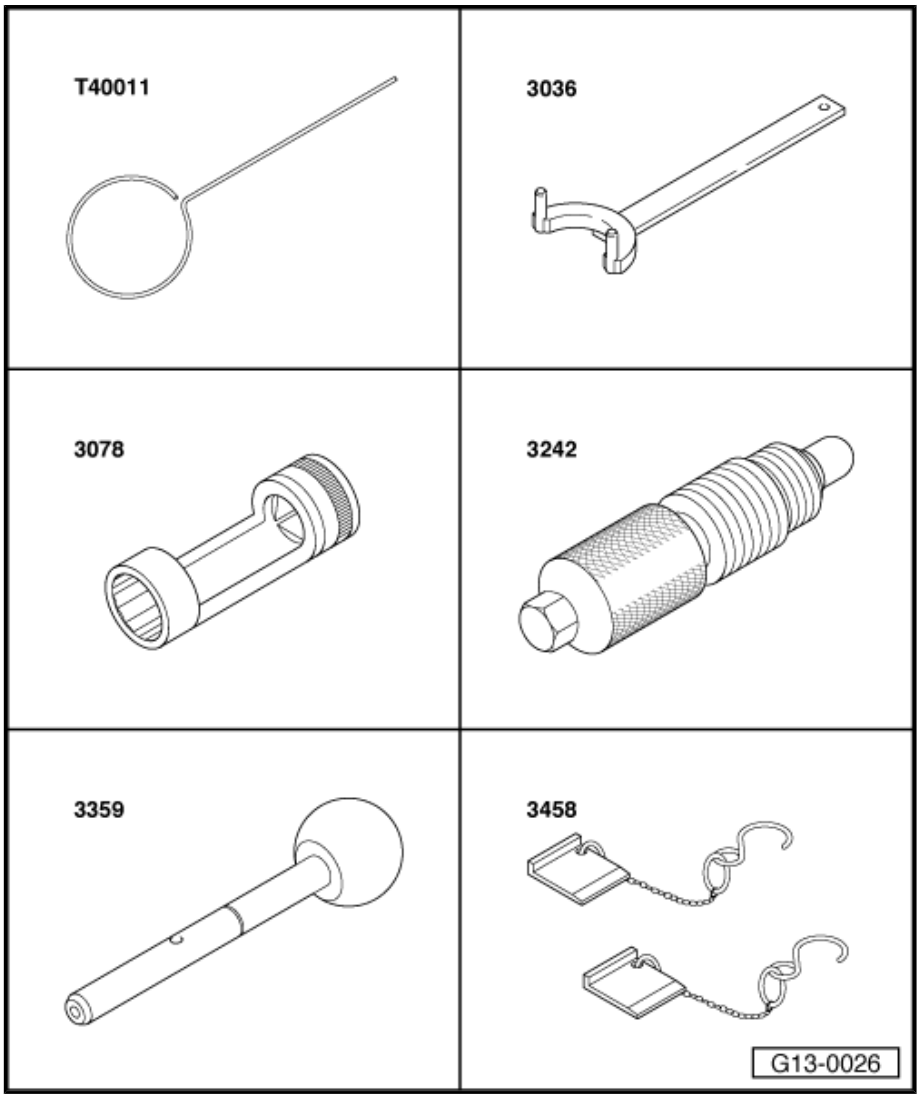

- Two-arm puller -T40001-

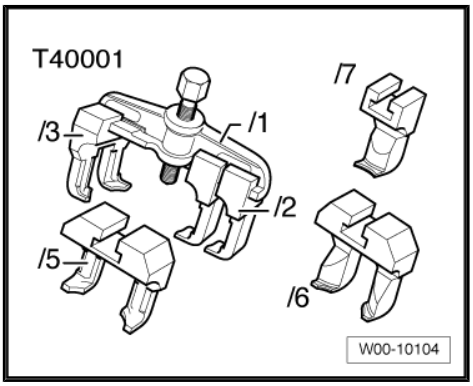

Protected by copyright. Copying for private or commercial purposes, in part or in whole, is not permitted unless authorised by AUDI AG. AUDI AG does not guarantee or accept any liability with respect to the correctness of information in this document. Copyright by AUDI AG.

Removing

- Engine in vehicle.
- Remove poly V-belt for power steering pump, alternator and viscous fan ⇒ page 31 .
- Open oil filler cap.
- Turn engine until the marking “- OT -” (TDC) is visible on camshaft.

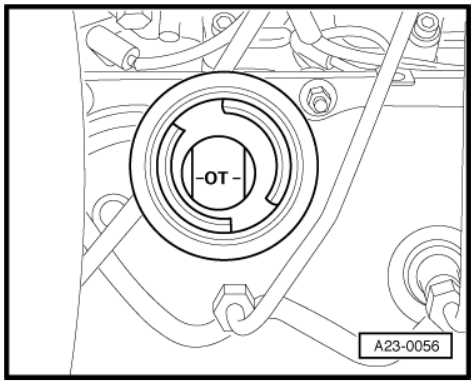

Note

Turn over the engine at the central bolt on the crankshaft.

Protected by copyright. Copying for private or commercial purposes, in part or in whole, is not permitted unless authorised by AUDI AG. AUDI AG does not guarantee or accept any liability with respect to the correctness of information in this document. Copyright by AUDI AG.

- Remove bolts -arrows- securing exhaust pipe for auxiliary/ supplementary heater to noise insulation.

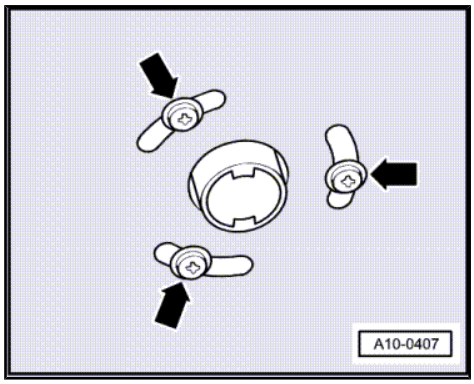

- Release quick-release fasteners -1- and -2- and take off front and rear noise insulation.

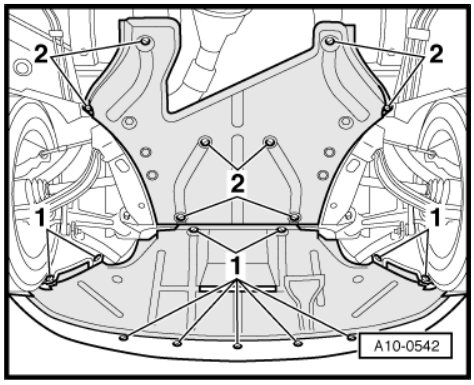

- Unbolt bracket for noise insulation -arrows-.
- Unscrew plug for TDC marking from cylinder block.

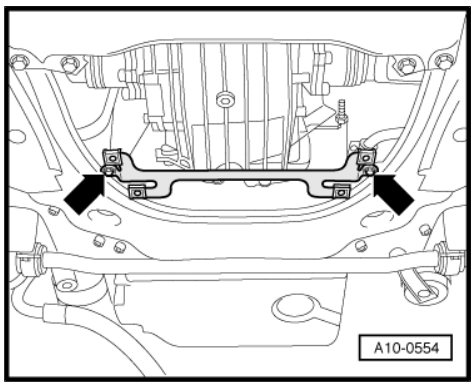

Note

There is a TDC drilling in the crankshaft directly behind the plug (it is possible to feel the hole).

WARNING

Injury risk.

- *Do not rotate the crankshaft while feeling for the TDC drilling with your finger.*

– Screw locking pin -3242- into threaded hole where plug has been removed, and tighten.
– Remove cover behind coolant expansion tank.

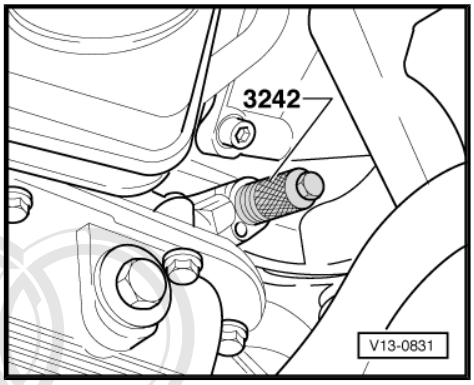

– Disconnect vacuum hose leading to exhauster pump -arrows-.

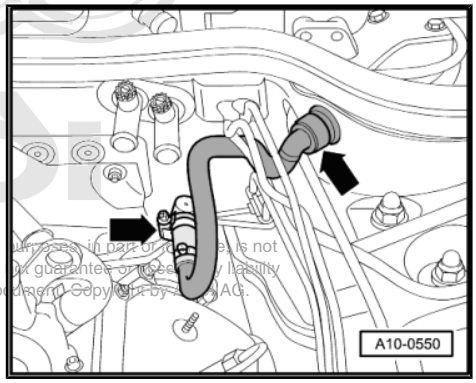

Protected by copyright. Copying for private or commercial purposes, in part or in whole, is not permitted unless authorised by AUDI AG. AUDI AG does not guarantee or accept any liability with respect to the correctness of information in this document. Copyright by AUDI AG.

– Remove bolts -1- for exhauster pump with heat shield on cylinder head (left-side) and turn pump in anti-clockwise direction -arrow-.
– Remove exhauster pump.

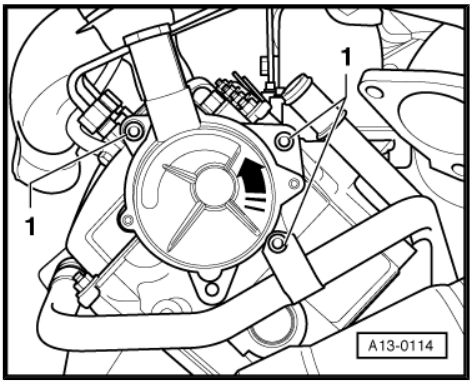

– Remove air hose from air cleaner -arrows-.

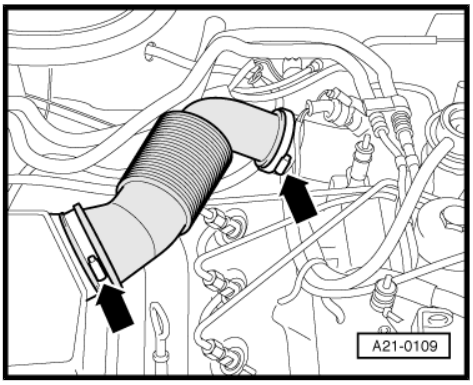

– Unplug electrical connectors -1 ... 4-.
– Disengage connector -3- from bracket.
– Slide charge pressure control solenoid valve -N75- and exhaust gas recirculation valve -N18- off bracket in direction of -arrow- and move clear.

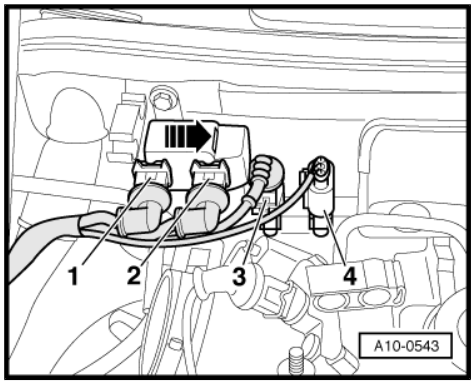

– Disconnect vacuum hoses -arrows- from turbocharger and mechanical exhaust gas recirculation valve.
– Move vacuum hoses clear.

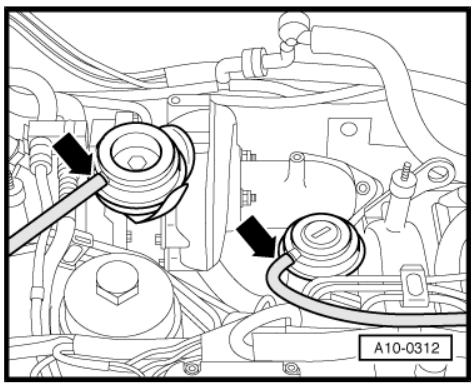

– Remove air intake pipe between turbocharger and charge air cooler -arrows-.

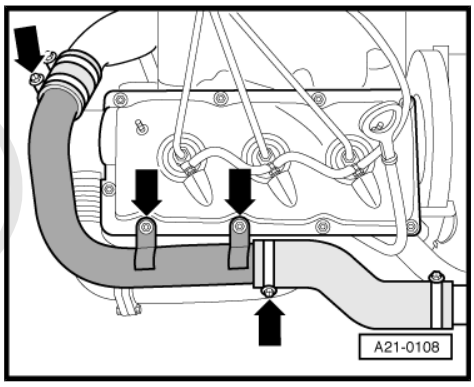

– Using a screwdriver, lever off sealing cap -arrow- on cylinder head (right-side).

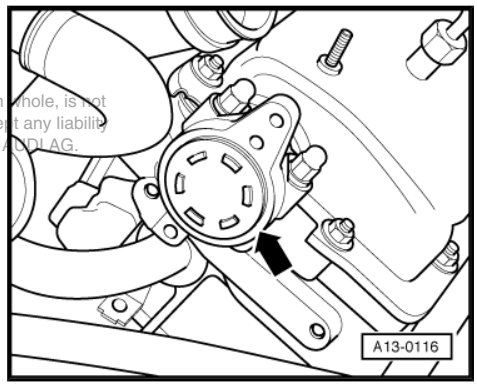

Protected by copyright. Copying for private or commercial purposes, in part or in whole, is not permitted unless authorised by AUDI AG. AUDI AG does not guarantee or accept any liability with respect to the correctness of information in this document. Copyright by AUDI AG.

Note

- *Removal destroys sealing cap.*
- *Take care not to damage sealing surfaces.*

– Insert camshaft holder -3458- in both cylinder heads and secure them with chain to prevent them from falling.

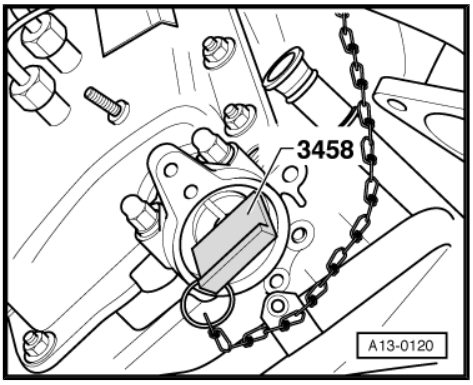

> **Caution**
>
> *Do not use camshaft holders -3458- as counter-hold tools.*

> **Caution**
>
> *If a used belt runs in the opposite direction when it is refitted, this can cause breakage.*
>
> ♦ *Before removing, mark direction of rotation of toothed belt with chalk or felt-tipped pen for re-installation.*

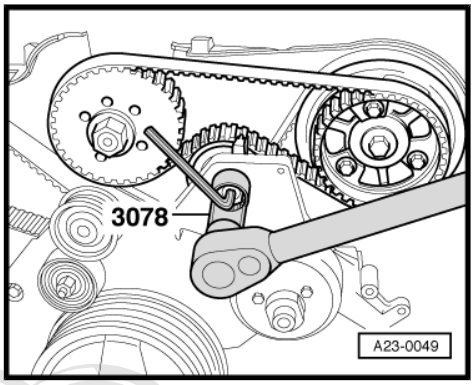

– Slacken toothed belt tensioner and take toothed belt off camshaft sprocket.

– Unbolt drive sprocket -1- for injection pump from camshaft sprocket -arrows-.

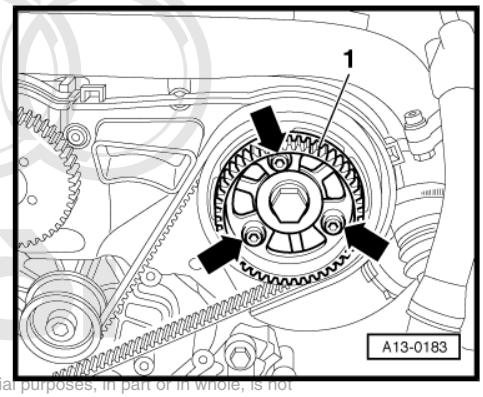

> **Caution**
>
> *Do not use camshaft holder -3458- as a counter-hold tool.*

Protected by copyright. Copying for private or commercial purposes, in part or in whole, is not permitted unless authorised by AUDI AG. AUDI AG does not guarantee or accept any liability with respect to the correctness of information in this document. Copyright by AUDI AG.

– Loosen both camshaft sprocket bolts using counter-hold tool -3036- .

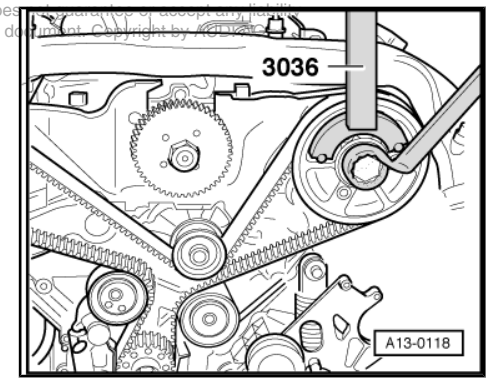

> **Note**
>
> *Leave bolts screwed in loosely.*

– Detach cover cap at bottom right of bracket for viscous fan.

– Turn toothed belt tensioning roller in anti-clockwise direction -arrow- using an 8 mm hexagon key until tensioning lever of tensioner is compressed far enough to allow locking pin -T40011- to be inserted into hole and plunger.

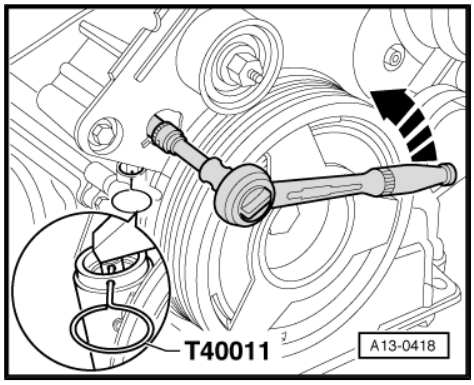

Note

The toothed belt tensioner is oil-damped and can therefore only be compressed slowly by applying constant pressure.

Caution

If a used belt runs in the opposite direction when it is refitted, this can cause breakage.

- ***Before removing, mark direction of rotation of toothed belt with chalk or felt-tipped pen for re-installation.***

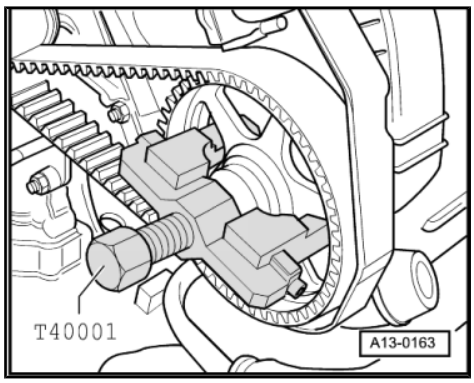

– Pull camshaft sprockets (left and right) off their tapers using two-arm puller -T40001- with claws -T40001/2- .

– Unbolt camshaft sprocket, left-side (cylinder bank 2).

– Detach toothed belt from camshaft sprockets.

Installing (adjusting valve timing)

- Camshafts locked in position with camshaft holders -3458- .
- Crankshaft locked in position with locking pin -3242- .
- Camshaft sprockets free to turn.

The valve timing must be adjusted as described below, even when the toothed belt has only been removed from the camshaft sprocket:

- The crankshaft must not be at “TDC” at any cylinder when the camshaft is turned. Otherwise, there is a risk of damage to valves and piston crowns.
- Do not use camshaft holders -3458- as counter-hold tools.
- Adjustment can be performed with cold or warm engine.

Protected by copyright. Copying for private or commercial purposes, in part or in whole, is not permitted unless authorised by AUDI AG. AUDI AG does not guarantee or accept any liability with respect to the correctness of information in this document. Copyright by AUDI AG.

– Fit the toothed belt onto one of the camshaft sprockets.

– Take second camshaft sprocket, fit toothed belt and install sprocket on camshaft.

– Tighten the two camshaft sprocket bolts until the sprockets can still just be turned without axial movement.

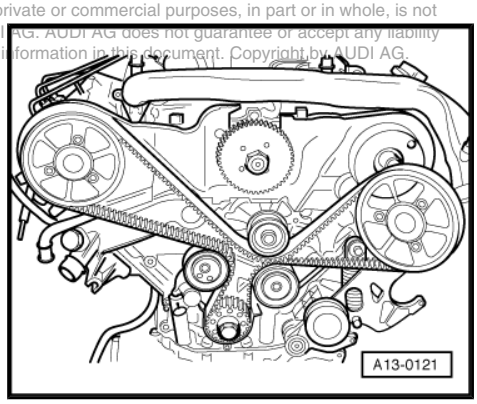

– Use an 8 mm hexagon key to slacken toothed belt tensioning roller in anti-clockwise direction -arrow- and pull out locking pin -T40011- .

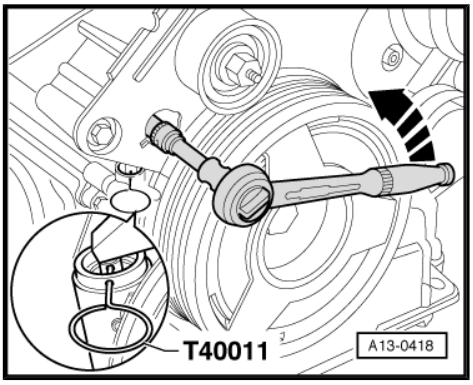

– Use torque wrench to pretension toothed belt to 15 Nm in clockwise direction -arrow-.

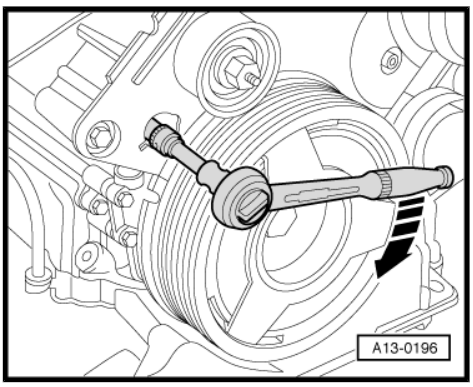

– Tighten bolts for camshaft sprockets using counter-hold tool -3036- .

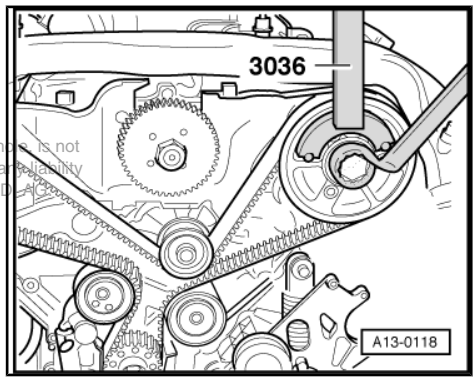

Caution

Do not use camshaft holders -3458- as counter-hold tools.

Protected by copyright. Copying for private or commercial purposes, in part or in whole, is not permitted unless authorised by AUDI AG. AUDI AG does not guarantee or accept any liability with respect to the correctness of information in this document. Copyright by AUDI AG.

– Lock injection pump sprocket with diesel injection pump locking pin -3359- .

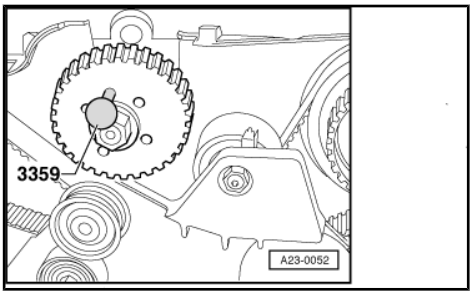

– Install drive sprocket for injection pump -1- so that it is aligned centrally in elongated holes.
– Tighten drive sprocket -arrows- until it is still just possible to turn it on the camshaft sprocket.
– Position toothed belt for injection pump. Pay attention to the direction of rotation as marked upon removal.

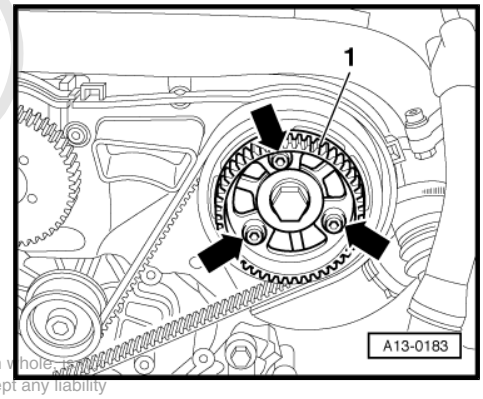

Protected by copyright. Copying for private or commercial purposes, in part or in whole, is not permitted unless authorised by AUDI AG. AUDI AG does not guarantee or accept any liability with respect to the correctness of information in this document. Copyright by AUDI AG.

– Tension toothed belt by turning Allen key in anti-clockwise direction -arrow- until marks -1- coincide.
– Then tighten nut using socket (22 mm) -3078- .

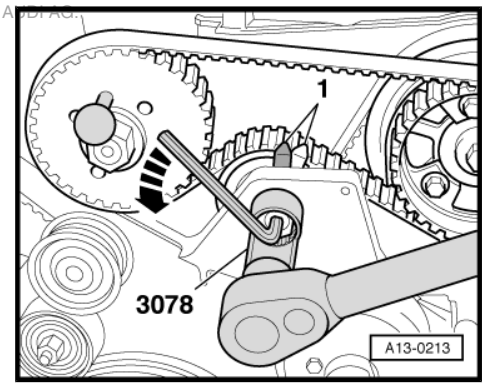

Note

Depending on version, pointer -1- may have no tip.

– Tighten bolts at camshaft sprocket.
– Remove diesel injection pump locking pin -3359- .
– Remove camshaft holders -3458- from both cylinder heads.
– Remove locking pin -3242- .
– Turn crankshaft two rotations in normal direction of rotation until the crankshaft is at “TDC” again.

– To check adjustment, screw locking pin -3242- into hole in cylinder block once again.

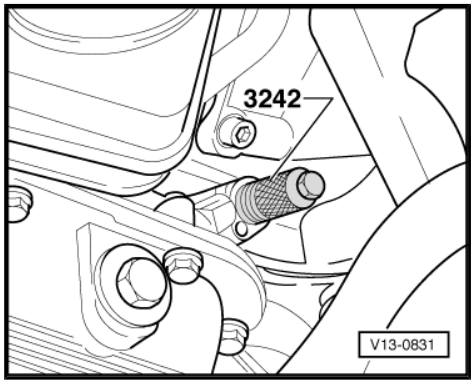

– Check positions of camshafts with camshaft holders -3458- .

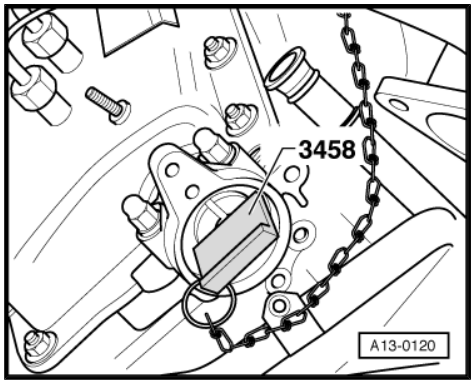

Note

If it is not possible to insert camshaft holders, repeat adjustment.

– Remove camshaft holders -3458- from both cylinder heads.
– Remove locking pin -3242- .

– Check tension of toothed belt for injection pump.

• Marks -1- and -2- must be opposite one another.

– Screw plug for the TDC mark into cylinder block with a new seal.

– Install exhauster pump with new O-rings on cylinder head (left-side).

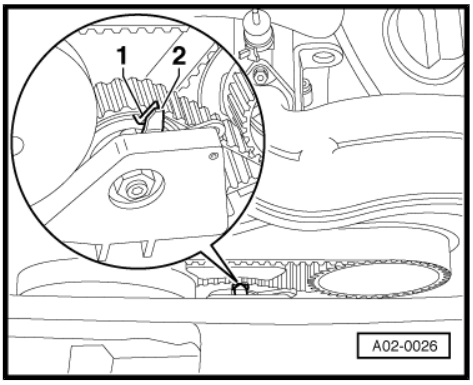

– Renew sealing cap (rear) on cylinder head (right-side).

– Using a suitable drift, knock in new sealing cap (core plug) -arrow- until flush.

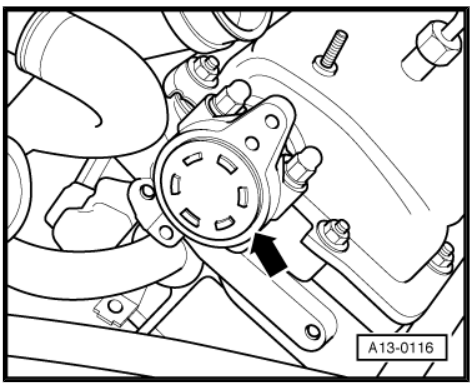

Remaining installation steps are carried out in reverse sequence; note the following:

Note

Renew seals and O-rings.

– Install poly V-belt ⇒ page 31 .

– Dynamically check and adjust commencement of injection ⇒ Rep. Gr. 23 .

Tightening torques

Component	Nm
Camshaft sprocket to camshaft	75
Drive sprocket for injection pump to camshaft	22
Exhauster pump to cylinder head	10
Screw plug in cylinder block	10
Tensioning roller for injection-pump toothed belt to bracket for viscous fan	36

Protected by copyright. Copying for private or commercial purposes, in part or in whole, is not permitted unless authorised by AUDI AG. AUDI AG does not guarantee or accept any liability with respect to the correctness of information in this document. Copyright by AUDI AG.

1.12 Removing and installing toothed belt

Special tools and workshop equipment required

- Locking pin -T40011-
- Counter-hold tool -3036-
- Socket (22 mm) -3078-
- Locking pin -3242-
- Diesel injection pump locking pin -3359-
- Camshaft holder -3458-

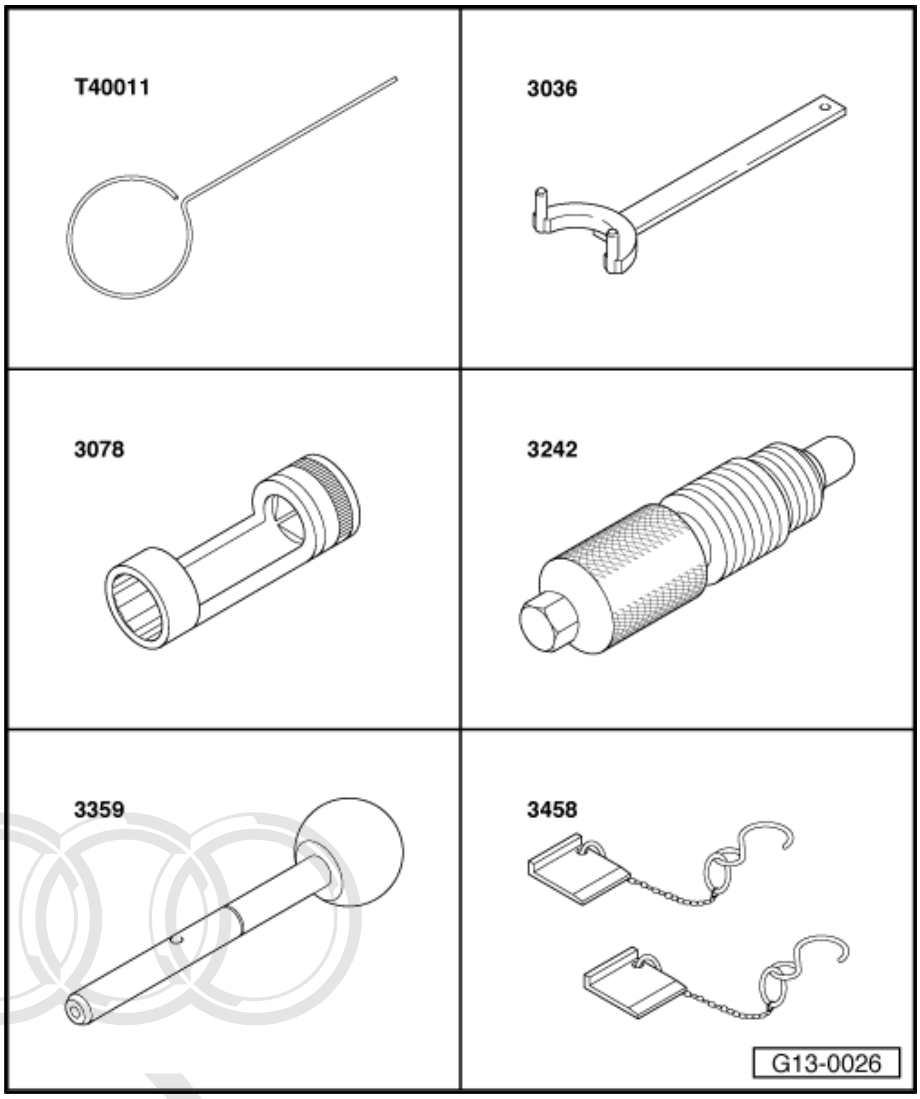

- Two-arm puller -T40001-

Protected by copyright. Copying for private or commercial purposes, in part or in whole, is not permitted unless authorised by AUDI AG. AUDI AG does not guarantee or accept any liability with respect to the correctness of information in this document. Copyright by AUDI AG.

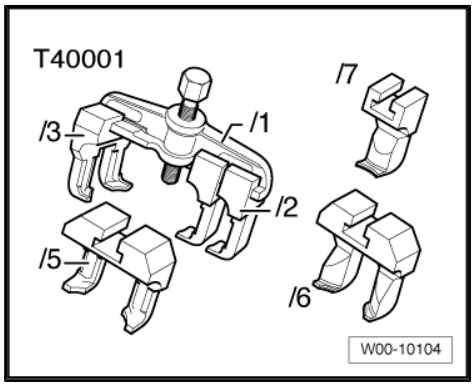

Removing

- Engine in vehicle.
- Remove poly V-belt for power steering pump, alternator and viscous fan ⇒ page 31 .
- Open oil filler cap.
- Turn engine until the marking “- OT -” (TDC) is visible on camshaft.

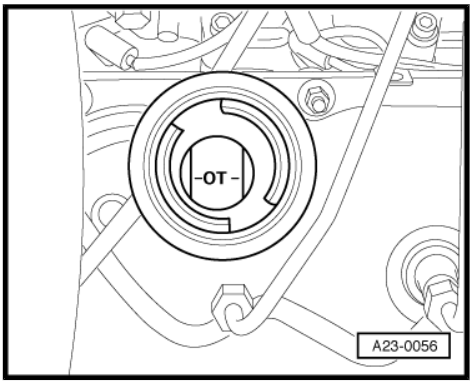

Note

Turn over the engine at the central bolt on the crankshaft.

- Remove bolts -arrows- securing exhaust pipe for auxiliary/ supplementary heater to noise insulation.

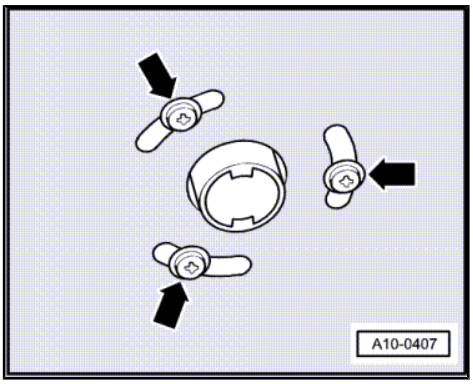

- Release quick-release fasteners -1- and -2- and take off front and rear noise insulation.

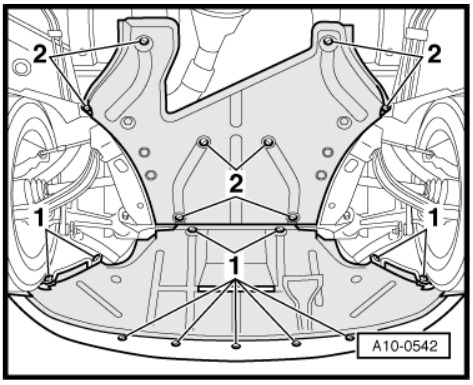

- Unbolt bracket for noise insulation -arrows-.
- Unscrew plug for TDC marking from cylinder block.

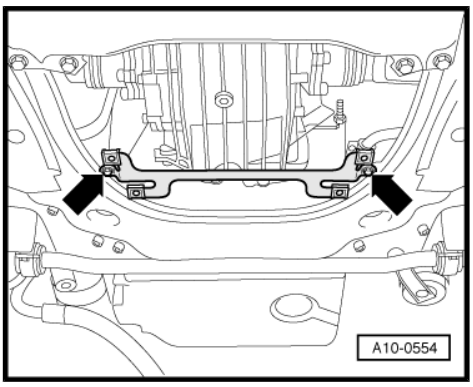

Note

There is a TDC drilling in the crankshaft directly behind the plug (it is possible to feel the hole).

WARNING

Injury risk.

- *Do not rotate the crankshaft while feeling for the TDC drilling with your finger.*

Protected by copyright. Copying for private or commercial purposes, in part or in whole, is not permitted unless authorised by AUDI AG. AUDI AG does not guarantee or accept any liability with respect to the correctness of information in this document. Copyright by AUDI AG.

– Screw locking pin -3242- into threaded hole where plug has been removed and tighten.
– Remove cover behind coolant expansion tank.

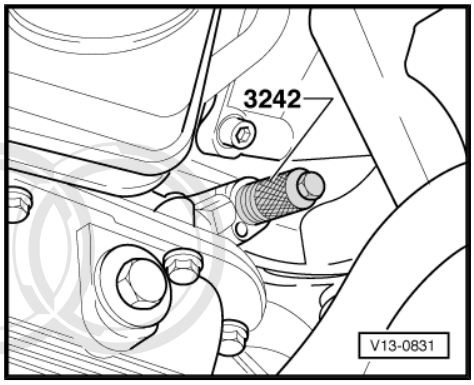

– Disconnect vacuum hose leading to exhauster pump -arrows-.

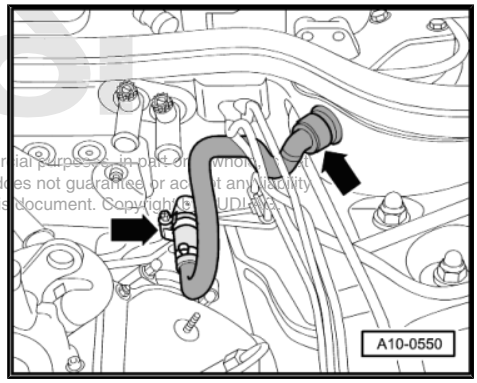

Protected by copyright. Copying for private or commercial purposes, in part or whole, is not permitted unless authorised by AUDI AG. AUDI AG does not guarantee or accept any liability with respect to the correctness of information in this document. Copyright © AUDI AG.

– Remove bolts -1- for exhauster pump with heat shield on cylinder head (left-side) and turn pump in anti-clockwise direction -arrow-.
– Remove exhauster pump.

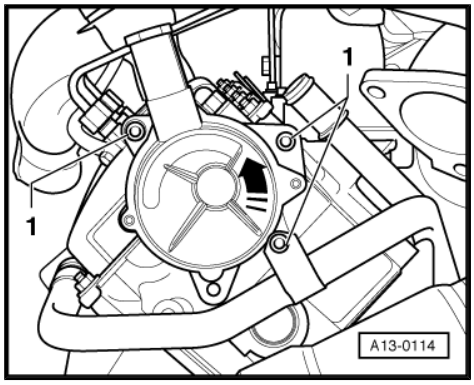

– Remove air hose from air cleaner -arrows-.

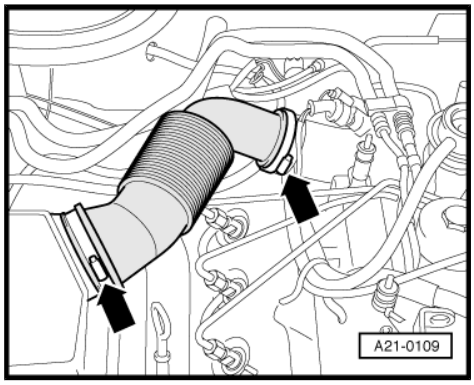

– Unplug electrical connectors -1 ... 4-.
– Disengage connector -3- from bracket.
– Slide charge pressure control solenoid valve -N75- and exhaust gas recirculation valve -N18- off bracket in direction of -arrow- and move clear.

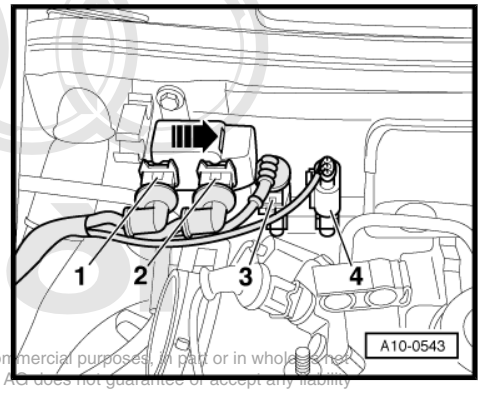

Protected by copyright. Copying for private or commercial purposes, in part or in whole is not permitted unless authorised by AUDI AG. AUDI AG does not guarantee or accept any liability with respect to the correctness of information in this document. Copyright by AUDI AG.

– Disconnect vacuum hoses -arrows- from turbocharger and mechanical exhaust gas recirculation valve.
– Move vacuum hoses clear.

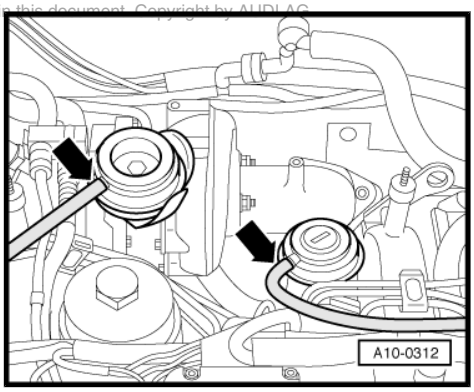

– Remove air intake pipe between turbocharger and charge air cooler -arrows-.

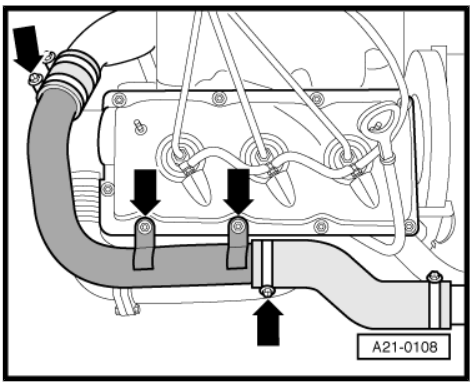

– Using a screwdriver, lever off sealing cap -arrow- on cylinder head (right-side).

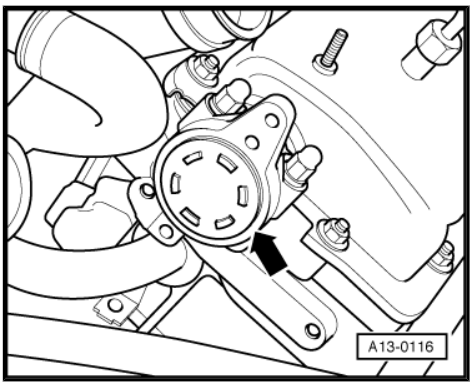

Note

- *Removal destroys sealing cap.*
- *Take care not to damage sealing surfaces.*

– Insert camshaft holder -3458- in both cylinder heads and secure them with chain to prevent them from falling.

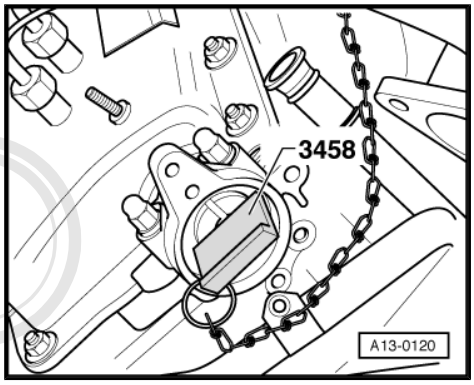

Caution

Do not use camshaft holders -3458- as counter-hold tools.

– Remove vibration damper on injection pump sprocket (unscrew bolts-1- prior to removing).

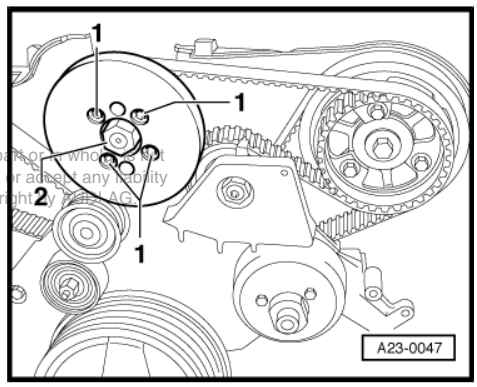

Caution

Do NOT loosen nut -2- for injection pump sprocket. Otherwise this would alter the basic setting of the injection pump. The setting cannot be re-adjusted with workshop equipment.

Protected by copyright. Copying for private or commercial purposes, in part or whole, is not permitted unless authorised by AUDI AG. AUDI AG does not guarantee or accept any liability with respect to the correctness of information in this document. Copyright by AUDI AG.

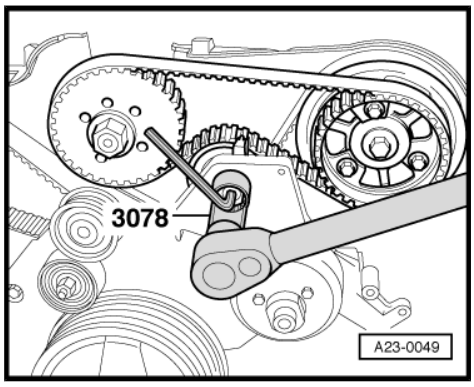

Caution

If a used belt runs in the opposite direction when it is refitted, this can cause breakage.

- *Before removing, mark direction of rotation of toothed belt with chalk or felt-tipped pen for re-installation.*

– Slacken toothed belt tensioner and take toothed belt off camshaft sprocket.

– Remove 8 bolts -1- and detach vibration damper.

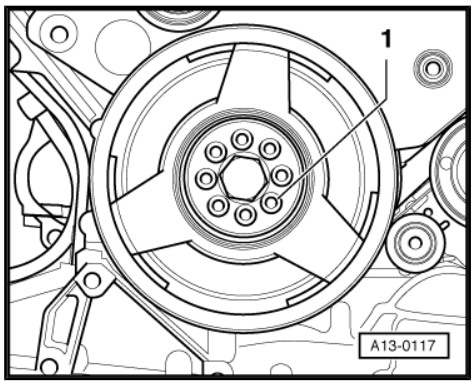

Note

Central bolt does not have to be loosened when removing vibration damper.

– Unbolt bottom section of toothed belt cover -4-.
– Unbolt viscous fan pulley.
– Remove bolts -1 ... 3- and detach bracket for viscous fan with idler rollers.

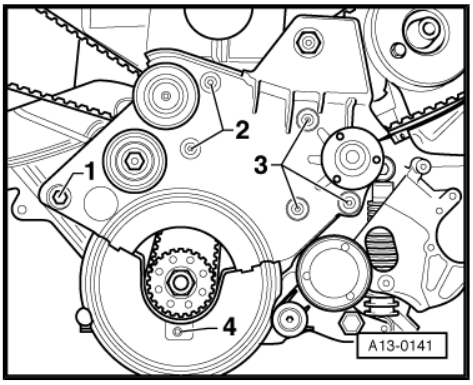

– Unbolt drive sprocket -1- for injection pump from camshaft sprocket -arrows-.

Caution

Do not use camshaft holder -3458- as a counter-hold tool.

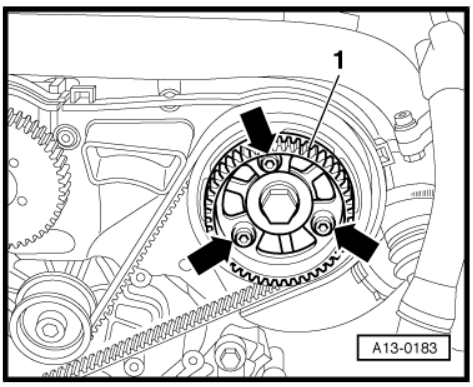

– Loosen bolts for camshaft sprockets using counter-hold tool -3036- .

Note

Leave bolts screwed in loosely.

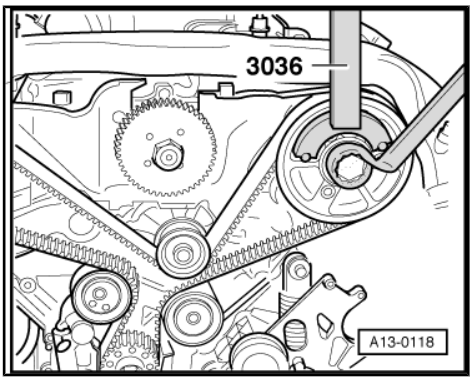

Caution

If a used belt runs in the opposite direction when it is refitted, this can cause breakage.

Protected by copyright. Copying for private or commercial purposes, in part or in whole, is not permitted unless authorised by AUDI AG. AUDI AG does not guarantee or accept any liability with respect to the correctness of information in this document.

- *Before removing, mark direction of rotation of toothed belt with chalk or felt-tipped pen for re-installation.*

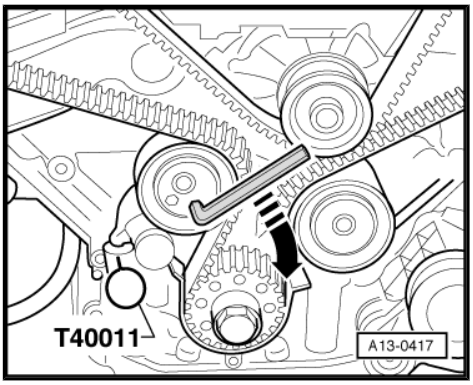

– Turn toothed belt tensioning roller in clockwise direction -arrow- using an 8 mm hexagon key until tensioning lever of tensioner is compressed far enough to allow locking pin -T40011- to be inserted into hole and plunger.

Note

The toothed belt tensioner is oil-damped and can therefore only be compressed slowly by applying constant pressure.

– Pull camshaft sprockets (left and right) off their tapers using two-arm puller -T40001- with claws -T40001/2- .

– Unbolt camshaft sprocket, left-side (cylinder bank 2).

– Remove toothed belt.

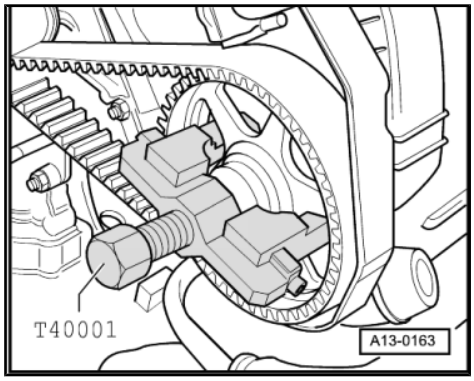

Installing (adjusting valve timing)

- Camshafts locked in position with camshaft holders -3458- .
- Crankshaft locked in position with locking pin -3242- .
- Camshaft sprockets free to turn.

The valve timing must be adjusted as described below, even when the toothed belt has only been removed from the camshaft sprocket.

- The crankshaft must not be at “TDC” at any cylinder when the camshaft is turned. Otherwise, there is a risk of damage to valves and piston crowns.
- Do not use camshaft holders -3458- as counter-hold tools.
- Adjustment can be performed with cold or warm engine.

– First fit toothed belt onto crankshaft sprocket, then onto camshaft sprocket (right-side), and then over tensioning roller, idler roller and coolant pump sprocket.

– Finally, take toothed belt sprocket for left camshaft, fit toothed belt and install sprocket on camshaft.

– Tighten the two camshaft sprocket bolts until the sprockets can still just be turned without axial movement.

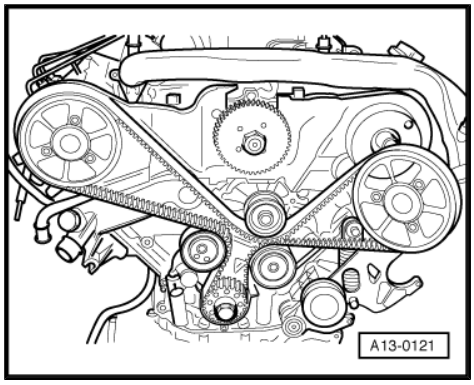

– Slacken belt tensioner using 8 mm Allen key -arrow- and pull out locking pin -T40011- .

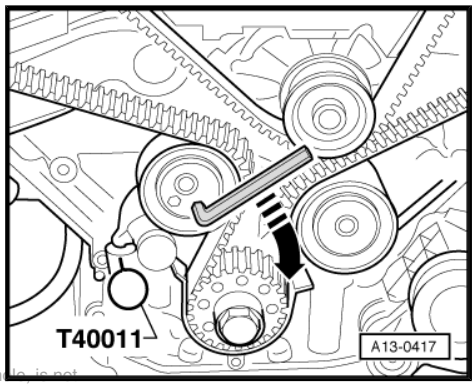

Protected by copyright. Copying for private or commercial purposes, in part or in whole, is not permitted unless authorised by AUDI AG. AUDI AG does not guarantee or accept any liability

– Use torque wrench to pretension toothed belt to 15 Nm in anti-clockwise direction -arrow-.

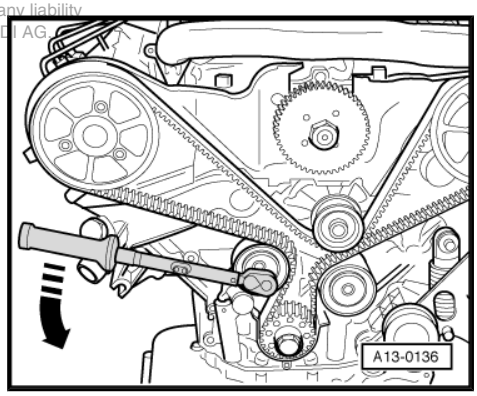

– Tighten bolts for camshaft sprockets using counter-hold tool -3036- .

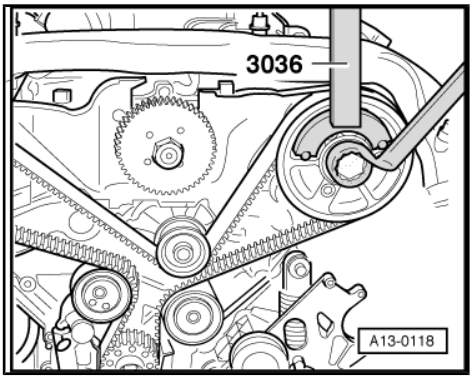

> **Caution**
>
> *Do not use camshaft holders -3458- as counter-hold tools.*

– Tighten bolts for bracket for viscous fan:

1 - 45 Nm

2 - 10 Nm

3 - 22 Nm

4 - 10 Nm

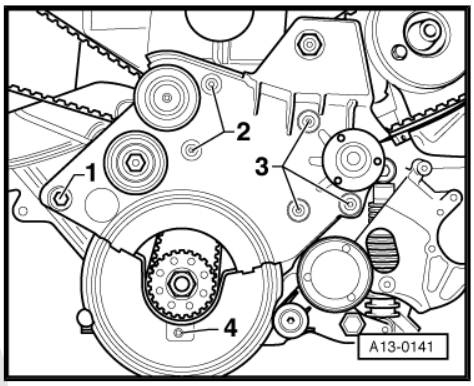

– Lock injection pump sprocket with diesel injection pump locking pin -3359- .

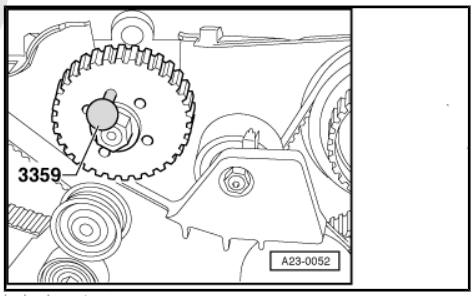

Protected by copyright. Copying for private or commercial purposes, in part or in whole, is not permitted unless authorised by AUDI AG. AUDI AG does not guarantee or accept any liability with respect to the correctness of information in this document. Copyright by AUDI AG.

– Install drive sprocket for injection pump -1- so that it is aligned centrally in elongated holes.

– Tighten drive sprocket -arrows- until it is still just possible to turn it on the camshaft sprocket.

– Position toothed belt for injection pump. Pay attention to the direction of rotation as marked upon removal.

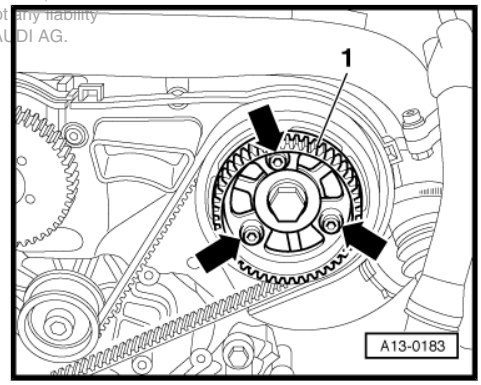

– Tension toothed belt by turning Allen key in anti-clockwise direction -arrow- until marks -1- coincide.

– Then tighten nut using socket (22 mm) -3078- .

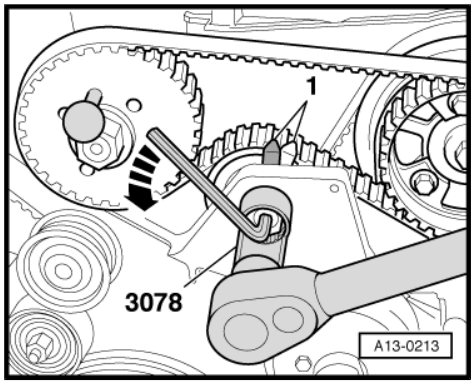

Note

Depending on version, pointer -1- may have no tip.

– Tighten bolts at camshaft sprocket.

– Remove diesel injection pump locking pin -3359- .

– Remove camshaft holders -3458- from both cylinder heads.

– Remove locking pin -3242- .

– Turn crankshaft two rotations in normal direction of rotation until the crankshaft is at “TDC” again.

– To check adjustment, screw locking pin -3242- into hole in cylinder block once again.

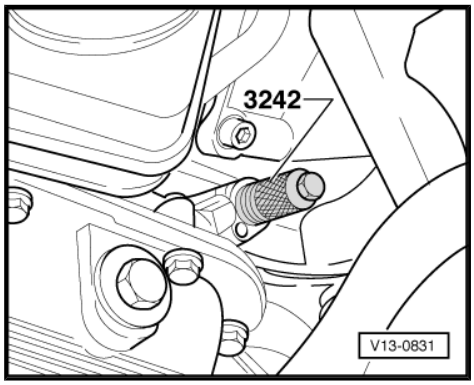

– Check positions of camshafts with camshaft holders -3458- .

If it is not possible to insert camshaft holders, repeat adjustment.

– Remove camshaft holders -3458- from both cylinder heads.

– Remove locking pin -3242- .

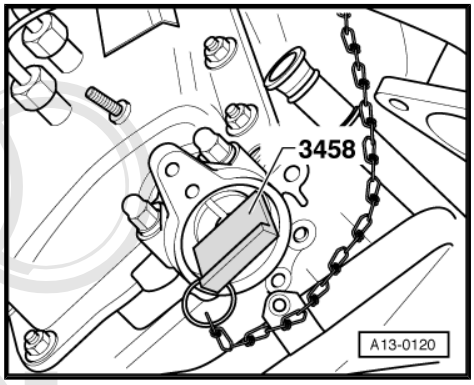

– Check tension of toothed belt for injection pump.

• Marks -1- and -2- must be opposite one another.

Protected by copyright. Copying for private or commercial purposes, in part or in whole, is not permitted unless authorised by AUDI AG. AUDI AG does not guarantee or assume liability with respect to the correctness of information in this document. ©Copyright by AUDI AG

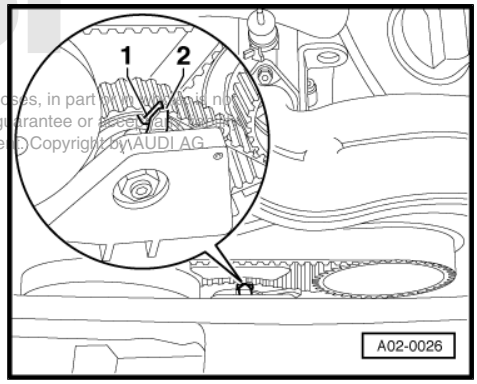

– Install vibration damper on injection pump sprocket (tighten bolts -1-).

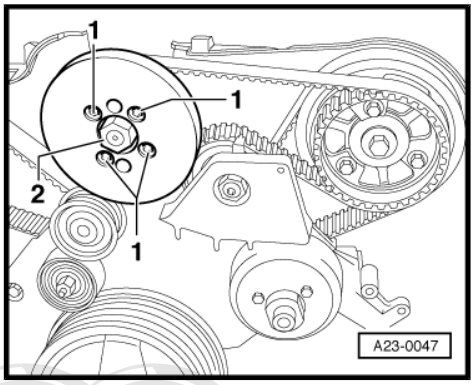

– Install vibration damper. In doing so, pay attention to locking lug -arrow- on toothed belt sprocket.
– Screw plug for the TDC mark into cylinder block with a new seal.
– Install exhauster pump with new O-rings on cylinder head (left-side).

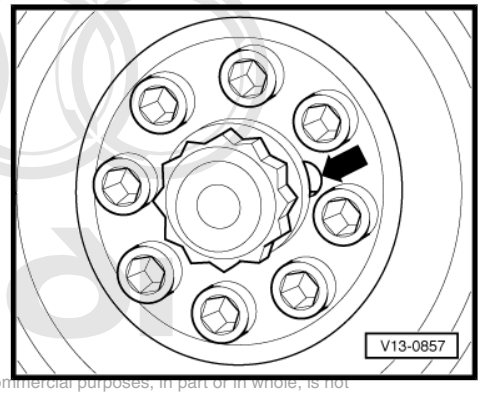

Protected by copyright. Copying for private or commercial purposes, in part or in whole, is not permitted unless authorised by AUDI AG. AUDI AG does not guarantee or accept any liability with respect to the correctness of information in this document. Copyright by AUDI AG.

– Fit sealing cap on cylinder head (right-side).
– Using a suitable drift, knock in new sealing cap (core plug) -arrow- until flush.

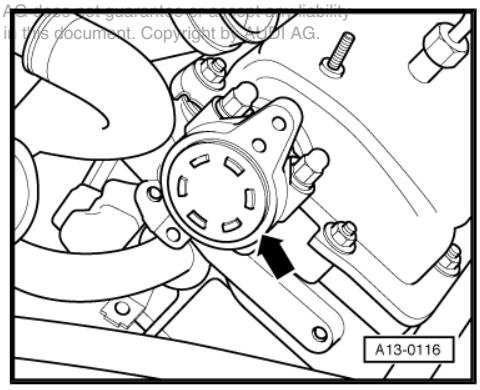

Remaining installation steps are carried out in reverse sequence; note the following:

Note

- *Renew seals and O-rings.*
- *Renew sealing cap.*

– Install poly V-belt for power steering pump, alternator and viscous fan ⇒ page 31 .
– Dynamically check and adjust commencement of injection ⇒ Rep. Gr. 23 .

Tightening torques

Component	Nm
Camshaft sprocket to camshaft	75
Vibration damper to crankshaft sprocket	22
Drive sprocket for injection pump to camshaft	22
Exhauster pump to cylinder head	10
Vibration damper to injection pump sprocket	22
Screw plug in cylinder block	10
Tensioning roller for injection-pump toothed belt to bracket for viscous fan	36

2 Sealing flanges and dual-mass flywheel/drive plate

2.1 Sealing flanges and dual-mass flywheel/drive plate - exploded view

Note

Servicing clutch ⇒ Rep. Gr. 30

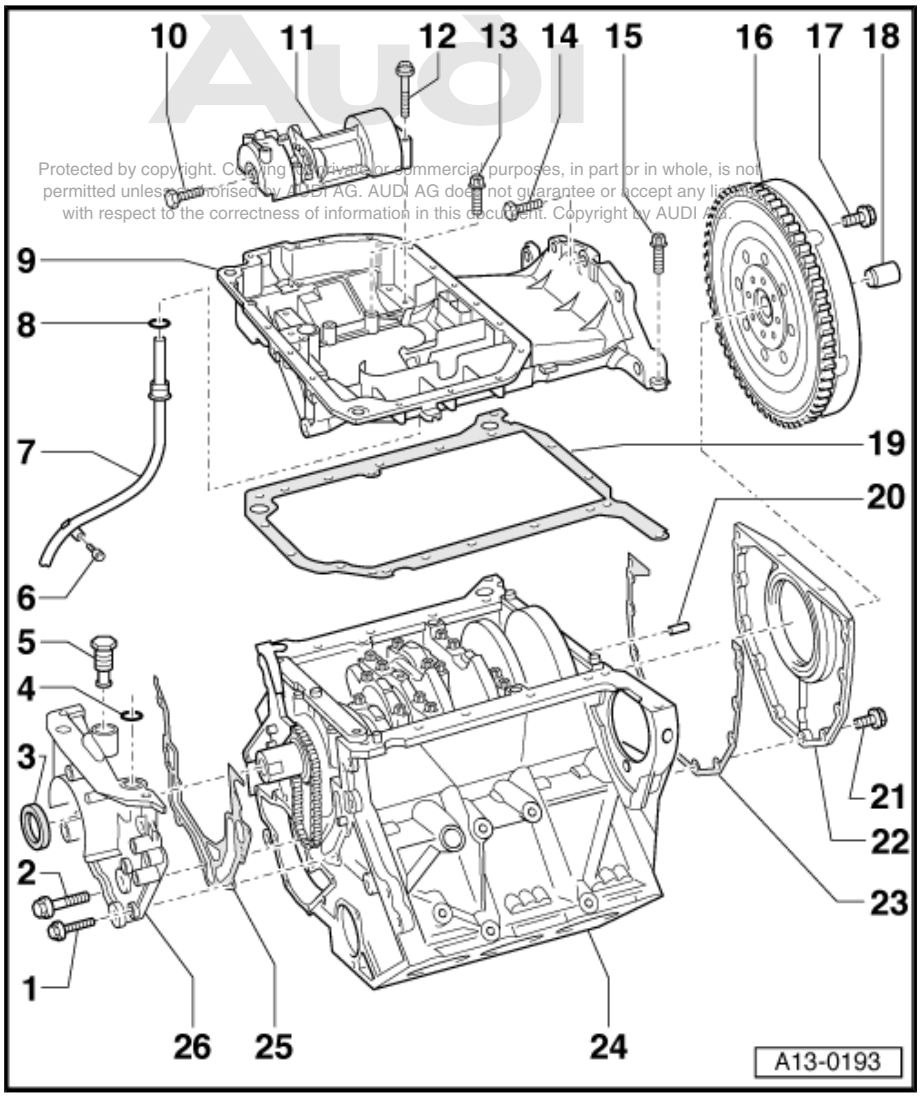

Protected by copyright. Copying for private or commercial purposes, in part or in whole, is not permitted unless authorised by AUDI AG. AUDI AG does not guarantee or accept any liability with respect to the correctness of information in this document. Copyright by AUDI AG.

1 - Bolt
- ❑ 10 Nm

2 - Bolt
- ❑ 30 Nm

3 - Oil seal for crankshaft (pulley end)
- ❑ Renewing ⇒ page 74

4 - O-ring
- ❑ For oil drilling
- ❑ Renew

5 - Timing chain tensioner
- ❑ Tighten to 35 Nm

6 - Bolt
- ❑ 10 Nm

7 - Guide tube for oil dipstick

8 - O-ring
- ❑ Renew

9 - Sump (top section)
- ❑ Different versions for engines with moulded gasket or liquid gasket; refer to ⇒ Electronic parts catalogue
- ❑ Removing and installing ⇒ page 153

10 - Bolt
- ❑ 45 Nm

11 - Balance shaft assembly
- ❑ With balance shaft
- ❑ Removing and installing ⇒ “1.6 Removing sump (top section)”, page 153

12 - Bolt
- ❑ 22 Nm

13 - Bolts
- ❑ M6 to cylinder block = 13 Nm
- ❑ M6 to sealing flange = 10 Nm
- ❑ M7 = 16 Nm
- ❑ Allocation ⇒ Electronic parts catalogue

14 - Bolt

- ❑ 45 Nm

15 - Bolt

- ❑ M6 to cylinder block = 13 Nm
- ❑ M6 to sealing flange = 10 Nm
- ❑ M7 = 16 Nm
- ❑ Allocation ⇒ Electronic parts catalogue

16 - Dual-mass flywheel or drive plate

- ❑ Dual-mass flywheel on vehicles with manual gearbox, removing and installing ⇒ page 78
- ❑ Drive plate on vehicles with automatic gearbox, removing and installing ⇒ page 80

17 - Bolt

- ❑ Renew
- ❑ Tightening torque for dual-mass flywheel: 60 Nm + 180° turn further
- ❑ Tightening torque for drive plate (vehicles with automatic gearbox): 60 Nm + 90° turn further

18 - Needle bearing

- ❑ Extracting and driving in ⇒ page 79

19 - Gasket

Moulded gasket - vehicles up to approx. 05.1998

Protected by copyright. Copying for private or commercial purposes, in part or in whole, is not permitted unless authorised by AUDI AG. AUDI AG does not guarantee or accept any liability with respect to the correctness of information in this document. Copyright by AUDI AG.

- ❑ Renewing ⇒ page 161

Liquid gasket - vehicles from approx. 06.1998 onwards

- ❑ Renewing ⇒ page 162

20 - Dowel pin

- ❑ Check that pin is firmly seated in crankshaft

21 - Bolt

- ❑ 10 Nm

22 - Sealing flange (gearbox end) with oil seal

- ❑ Remove upper section of sump in order to remove and install ⇒ page 153
- ❑ Lubricate sealing lip of oil seal lightly
- ❑ To install, push guide sleeve from installation kit onto crankshaft

23 - Gasket

- ❑ Renew

24 - Cylinder block

- ❑ Crankshaft - exploded view ⇒ page 82
- ❑ Pistons and conrods - exploded view ⇒ page 87

25 - Gasket

- ❑ Renew

26 - Sealing flange (pulley end)

- ❑ Removing and installing ⇒ page 75

2.2 Renewing crankshaft oil seal (pulley end)

Special tools and workshop equipment required

- ♦ Fitting sleeves -3202-
- ♦ Oil seal extractor -3203-
- ♦ Fitting sleeve -3265-

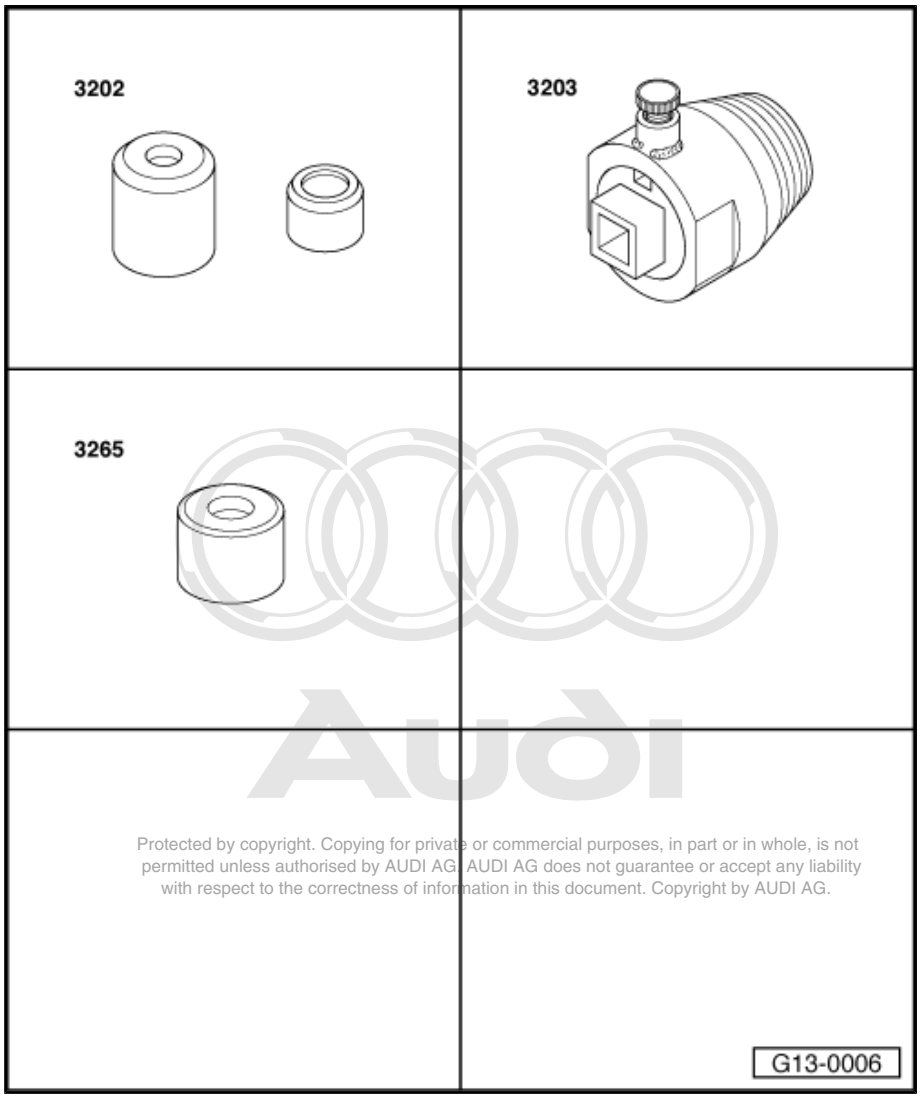

Protected by copyright. Copying for private or commercial purposes, in part or in whole, is not permitted unless authorised by AUDI AG. AUDI AG does not guarantee or accept any liability with respect to the correctness of information in this document. Copyright by AUDI AG.

Procedure

- • Engine in vehicle.
- – Remove toothed belt ⇒ page 62 .
- – Unscrew central bolt -3- for toothed belt sprocket -1- on crankshaft.
- – Detach spacer sleeve -2- and toothed belt sprocket.

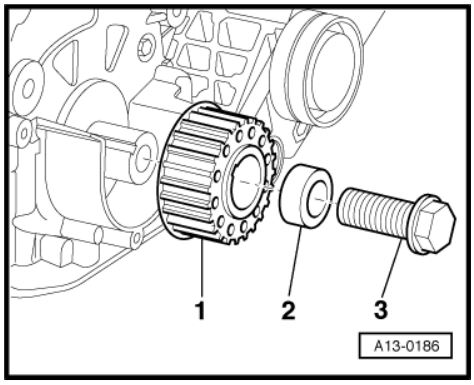

– Screw inner section of oil seal extractor -3203- six turns out of outer section and lock with knurled screw.
– Lubricate threaded head of oil seal extractor, place it in position and screw it into oil seal as far as possible (applying firm pressure).
– Loosen knurled screw and turn inner part against crankshaft until the oil seal is pulled out.
– Clamp flats of oil seal extractor in vice and use pliers to remove oil seal.
– Clean contact surface and sealing surface.

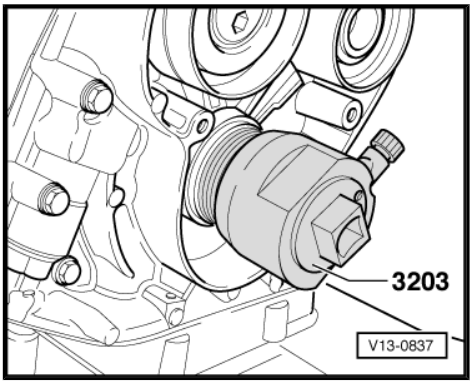

Note

Do not lubricate sealing lip and outer rim of oil seal before pressing in.

– Install oil seal using fitting sleeve -3202/1- .
– Press oil seal in so that it is flush using fitting sleeve -3265- and central bolt.

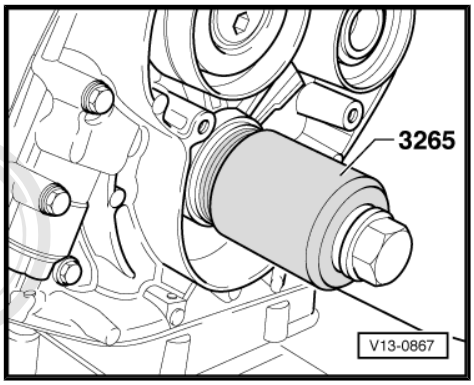

Note

Fit spacer sleeve for crankshaft sprocket underneath central bolt.

– Install crankshaft sprocket -1- with spacer sleeve -2- and new central bolt -3-.

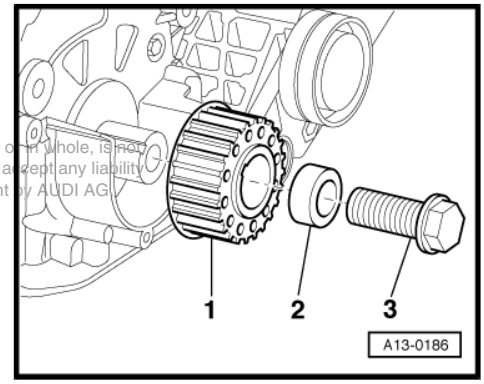

Note

Protected by copyright. Copying for private or commercial purposes, in part or in whole, is not permitted unless authorised by AUDI AG. AUDI AG does not guarantee or accept any liability with respect to the correctness of information. Copyright by AUDI AG.

- *Contact surface between toothed belt sprocket and crankshaft must be free of oil.*
- *Do not lubricate bolt for crankshaft sprocket.*

– Install toothed belt (adjust valve timing) ⇒ page 68 .

Tightening torque

Component	Nm
Toothed belt sprocket to crankshaft	200 + 180° [1]
• [1] Renew bolt.	

2.3 Removing and installing sealing flange (pulley end)

Special tools and workshop equipment required

♦ Fitting sleeves -3202-

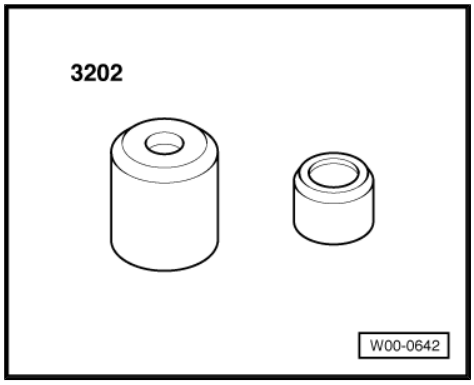

♦ Fitting sleeve -3265-

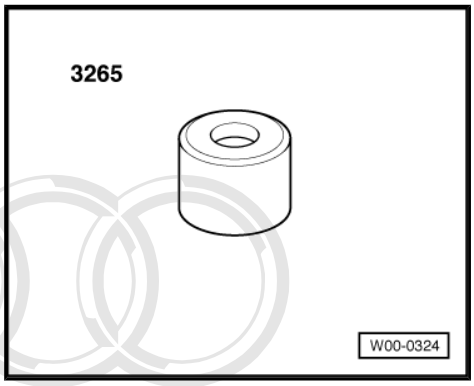

Removing

- Engine in vehicle.

– Remove toothed belt ⇒ page 62 .

– Unscrew central bolt -3- for toothed belt sprocket -1- on crankshaft.

– Detach spacer sleeve -2- and toothed belt sprocket.

– Remove top section of sump ⇒ page 153 .

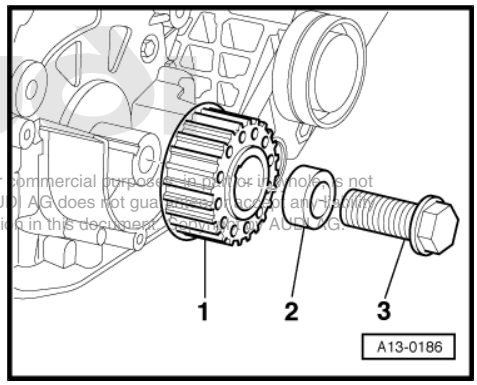

– Remove idler roller -4-, tensioning roller -3-, tensioning lever -2- and tensioner -1-.

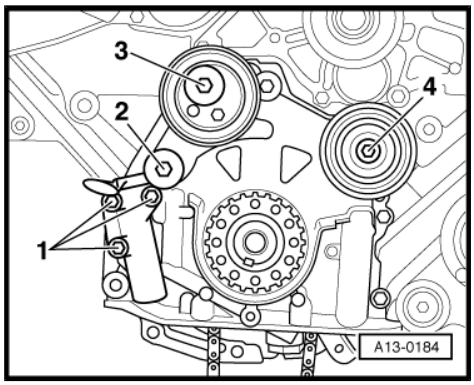

Protected by copyright. Copying for private or commercial purposes, in part or in whole, is not permitted unless authorised by AUDI AG. AUDI AG does not guarantee the accuracy and completeness of information in this document. ©2008 AUDI AG.

– Remove bolts -1- and -2-.
– Remove sealing flange (pulley end).
– Drive out oil seal with flange removed.

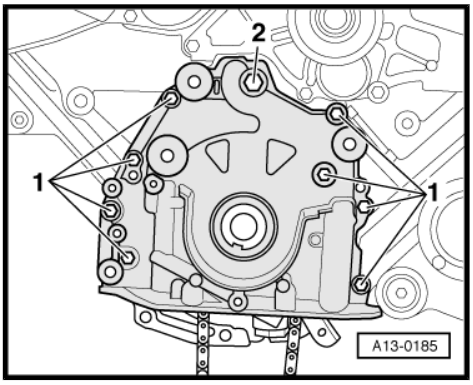

Installing

Installation is carried out in the reverse order; note the following:

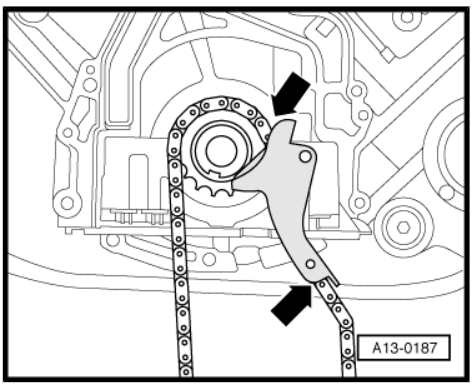

Note

- *Before installing sealing flange, check position of drive chain for oil pump. Chain must make contact with guide rail of chain tensioner -arrows-.*
- *If sealing flange is installed with oil seal already fitted, place fitting sleeve -3202/1- on end of crankshaft before installing sealing flange.*

– Clean sealing surfaces.
– Apply locking fluid to bolt -2- and insert bolt.
– Tighten bolts -1- and -2-.

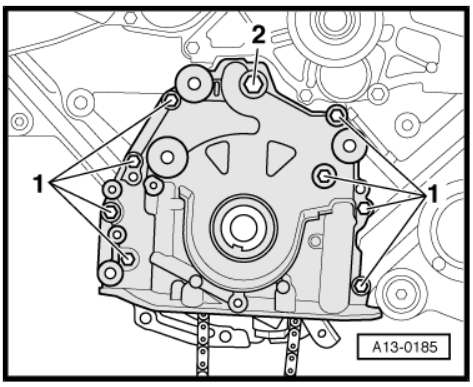

Note

Do not lubricate sealing lip and outer rim of oil seal before pressing in.

– Install oil seal using fitting sleeve -3202/1- .
– Press oil seal in so that it is flush using fitting sleeve -3265- and central bolt.

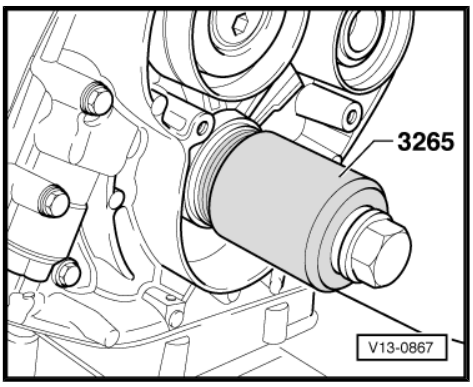

Note

Fit spacer sleeve for crankshaft sprocket underneath central bolt.

– Install idler roller.
– Installation position: recess in mounting hole (for bolt head) faces towards front.
– Pay attention to washers fitted behind tensioning roller and tensioning lever.

Protected by copyright. Copying or distribution in any form or by any means is not permitted unless authorised by AUDI AG. AUDI AG does not guarantee or accept any liability with respect to the correctness of information in this document. Copyright by AUDI AG.

– Install crankshaft sprocket -1- with spacer sleeve -2- and new central bolt -3-.

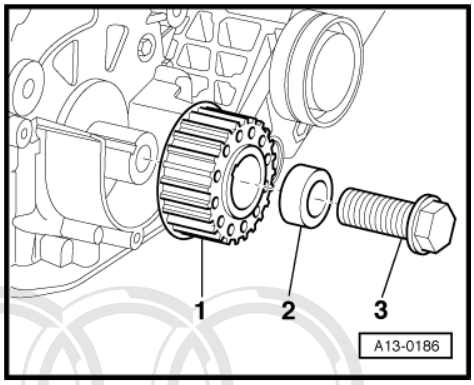

Note

- *Contact surface between toothed belt sprocket and crankshaft must be free of oil.*
- *Do not lubricate bolt for crankshaft sprocket.*

– Install toothed belt (adjust valve timing) ⇒ page 68 .

– Install sump (top section): vehicles with moulded gasket ⇒ page 161 , vehicles with liquid gasket ⇒ page 162 .

Tightening torques

Component		Nm
Sealing flange (pulley end) to cylinder block	M6	10
	M8	30
Toothed belt sprocket to crankshaft		200 + 180° 1)
Toothed belt tensioning roller to sealing flange (pulley end)		42
Tensioner to sealing flange (pulley end)		10
Tensioning lever to sealing flange (pulley end)		42
Idler roller to sealing flange (pulley end)		45
• 1) Renew bolt.		

Protected by copyright. Copying for private or commercial purposes, in part or in whole, is not permitted unless authorised by AUDI AG. AUDI AG does not guarantee or accept any liability with respect to the correctness of information in this document. Copyright by AUDI AG.

2.4 Removing and installing dual-mass flywheel - vehicles with manual gearbox

Special tools and workshop equipment required

- Counter-hold tool -10-201-

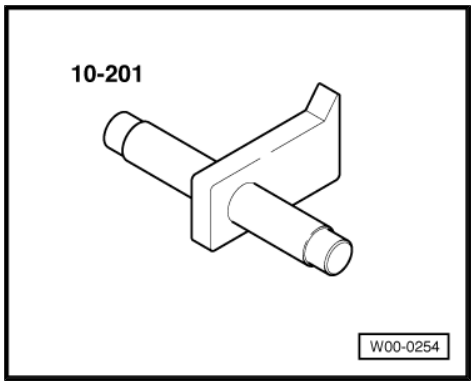

Removing

- Gearbox removed ⇒ Rep. Gr. 34 .

– Remove clutch pressure plate ⇒ Rep. Gr. 30 .

– Mark position of dual-mass flywheel on engine.

– Attach counter-hold tool -10-201- in order to loosen bolts.

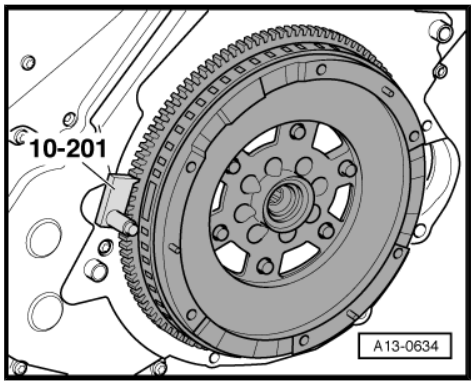

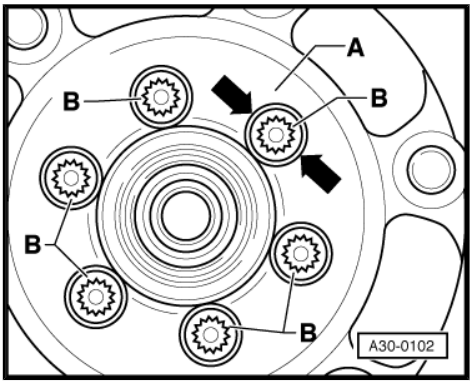

Note

To prevent damage to the dual-mass flywheel when removing, the bolts -B- must not be removed with an impact wrench or similar. The bolts may only be removed by hand using conventional tools.

– Rotate the dual-mass flywheel -A- so that the bolts align with the holes -arrows-.
– When unscrewing the bolts, make sure that the bolt heads do not come into contact with the dual-mass flywheel; the flywheel will otherwise be damaged as the bolts are screwed out.

Installing

Installation is carried out in the reverse order; note the following:

Note

The needle bearing is located in the dual-mass flywheel and must be driven in when renewing the dual-mass flywheel *⇒ page 79* .

– Use new securing bolts.
– Reverse position of counter-hold tool -10-201- in order to tighten bolts.
– Install clutch pressure plate ⇒ Rep. Gr. 30 .

Tightening torque

Component	Nm
Dual-mass flywheel to crankshaft	60 + 180° 1)
• 1) Renew bolts.	

2.5 Extracting and driving in needle bearing for dual-mass flywheel

Special tools and workshop equipment required

♦ Punch -3264-

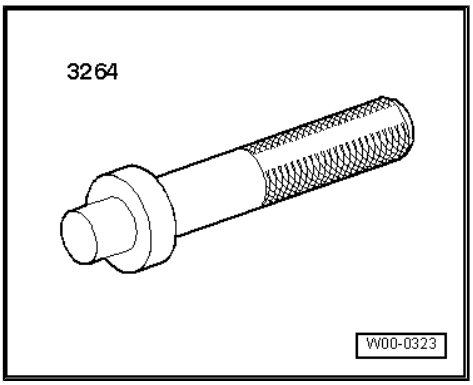

Protected by copyright. Copying for private or commercial purposes, in part or in whole, is not permitted unless authorised by AUDI AG. AUDI AG does not guarantee or accept any liability with respect to the correctness of information in this document. Copyright by AUDI AG.

♦ -1- Internal puller -Kukko 21/2-

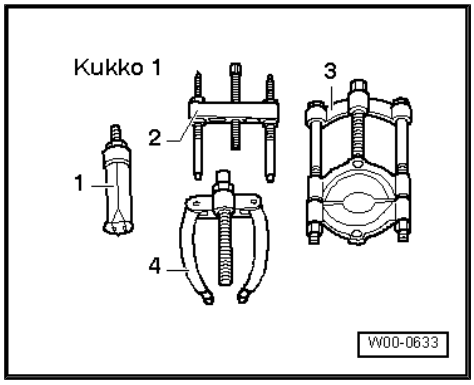

♦ -4- Counter-support -Kukko 22/1-

Procedure

– Remove needle bearing using internal puller -Kukko 21/2- and counter-support -Kukko 22/1- .

– Drive needle bearing into dual-mass flywheel using punch -3264- .

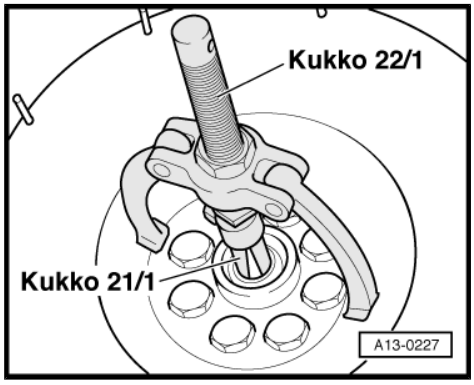

2.6 Removing and installing drive plate - vehicles with automatic gearbox

Special tools and workshop equipment required

♦ Counter-hold tool -10-201-

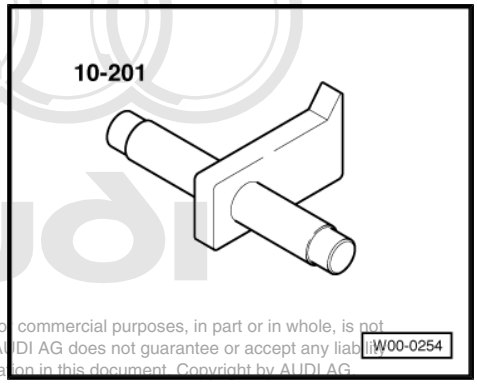

Protected by copyright. Copying for private or commercial purposes, in part or in whole, is not permitted unless authorised by AUDI AG. AUDI AG does not guarantee or accept any liability with respect to the correctness of information in this document. Copyright by AUDI AG.

Removing

• Automatic gearbox removed ⇒ Rep. Gr. 37 .

– Attach counter-hold tool -10-201- in order to loosen bolts.

– Mark installation position of drive plate on engine.

– Unbolt drive plate.

– Take out shim located behind.

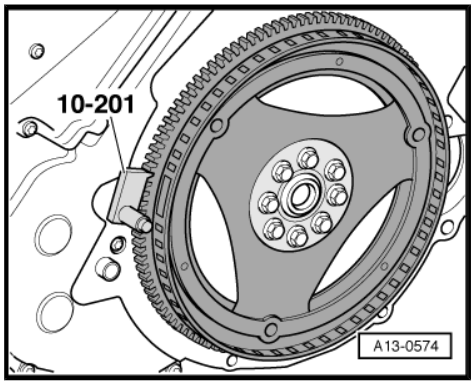

Installing

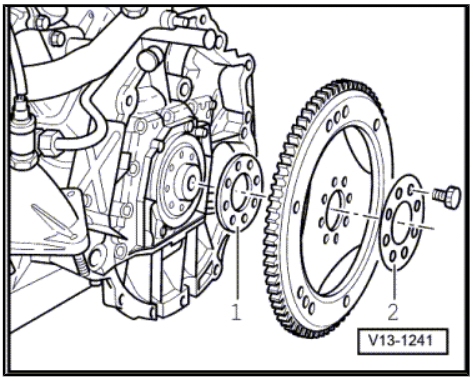

- Fit drive plate with washer -2- and 3.0 mm or 4.0 mm shim -1-.
- Insert at least 3 old bolts and tighten to 30 Nm.

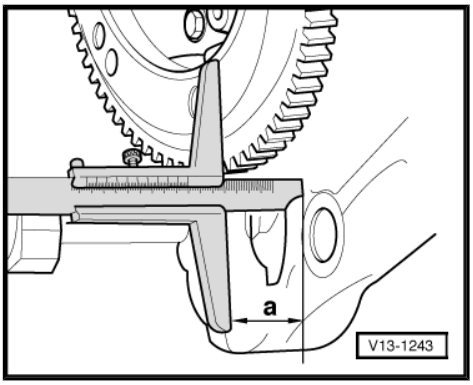

- Measure distance -a- at three points and calculate average value.
- Specification: 18.1 … 19.7 mm

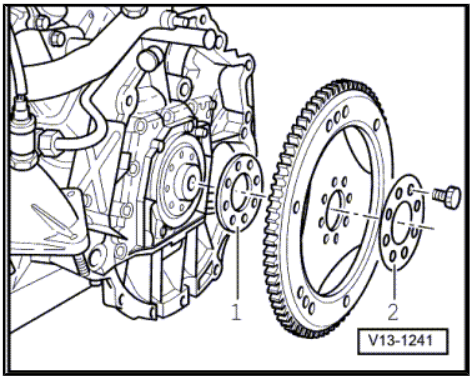

If specification is not obtained:

- Remove drive plate again and install with different shim -1-.
- Re-tighten bolts to 30 Nm.
- Repeat measurement procedure.

If specification is obtained:

- Renew bolts and tighten to final setting.
- Reverse position of counter-hold tool -10-201- in order to tighten bolts.
- Install automatic gearbox ⇒ Rep. Gr. 37 .

Tightening torque

Component	Nm
Drive plate to crankshaft	60 + 90° 1)
• 1) Renew bolts.	

Copyright by AUDI AG. Reproduction and copying for private or commercial purposes, in part or in whole, is not permitted unless authorised by AUDI AG. AUDI AG does not guarantee or accept any liability with respect to the correctness of information in this document. Copyright by AUDI AG.

3 Crankshaft

3.1 Crankshaft - exploded view

Note

- *Secure engine to engine and gearbox support -VAS 6095- when performing assembly work ⇒ page 22 .*
- *Vehicles with automatic gearbox are provided with a centring sleeve for the torque converter in the crankshaft ⇒ page 84 .*

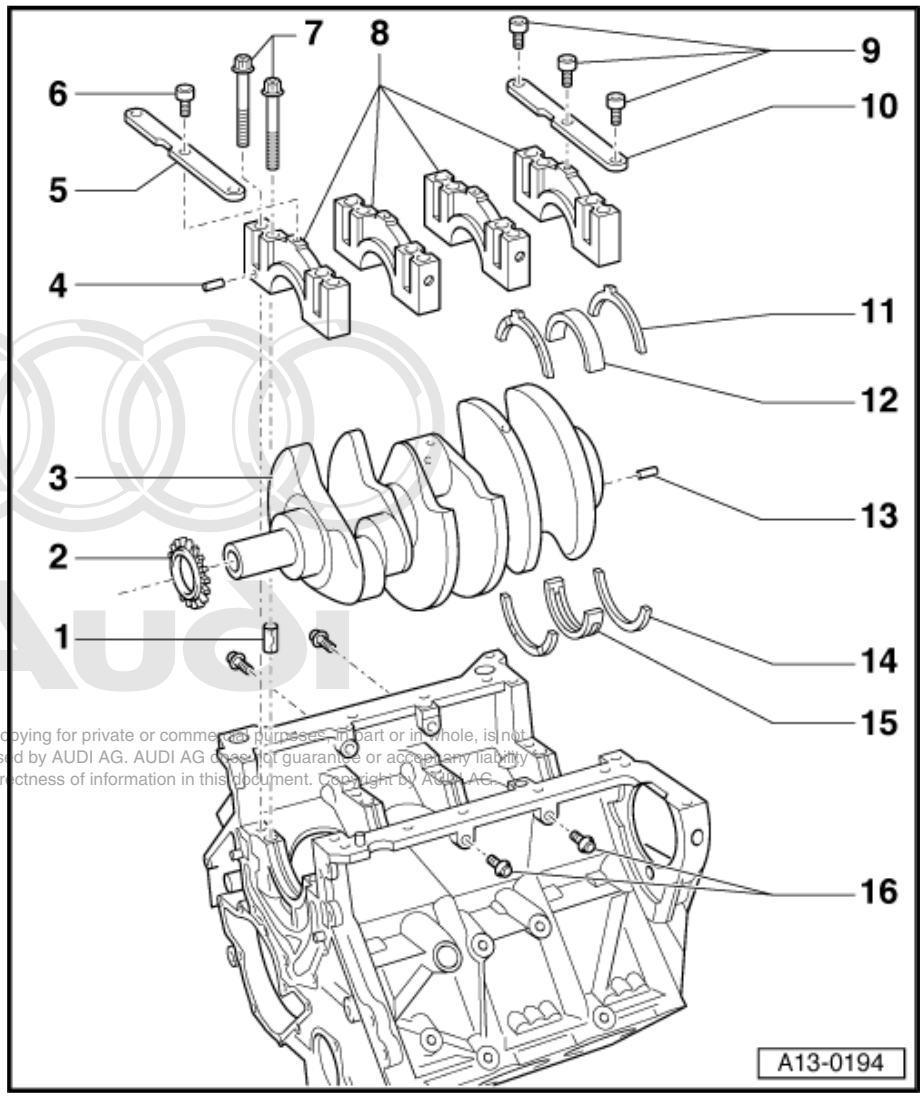

1 - Dowel sleeve
- ❑ Insert in cylinder block

2 - Chain sprocket
- ❑ Removing and installing ⇒ page 86

3 - Crankshaft
- ❑ Measuring axial clearance ⇒ page 84
- ❑ Measuring radial clearance ⇒ page 85
- ❑ Crankshaft dimensions ⇒ page 84

4 - Dowel pin

5 - Support
- ❑ Note installation position ⇒ page 84

6 - Bolt

22 Nm

7 - Bolts
- ❑ For bearing cap
- ❑ Renew
- ❑ Tightening torque and sequence ⇒ page 83

8 - Bearing cap
- ❑ Note marking ⇒ page 83
- ❑ Installing ⇒ page 83

9 - Bolt

22 Nm

10 - Support
- ❑ Note installation position ⇒ page 84

11 - Thrust washer
- ❑ Only fitted on 4th crankshaft bearing
- ❑ Oil grooves face outwards
- ❑ Note location
- ❑ Measuring axial clearance of crankshaft ⇒ page 84

Protected by copyright. Copying for private or commercial purposes, in part or in whole, is not permitted unless authorised by AUDI AG. AUDI AG does not guarantee or accept any liability with respect to the correctness of information in this document. Copyright by AUDI AG.

12 - Bearing shell

- ❑ For bearing cap (without oil groove)
- ❑ Mark used bearing shells for re-installation but not on bearing surface
- ❑ Bearing shells worn down to the base layer must be renewed

13 - Dowel pin

- ❑ Check that pin is firmly seated in crankshaft

14 - Thrust washer

- ❑ Only fitted on 4th crankshaft bearing
- ❑ Oil grooves face outwards
- ❑ Measuring axial clearance of crankshaft ⇒ page 84

15 - Bearing shell

- ❑ For cylinder block (with oil groove)
- ❑ Mark used bearing shells for re-installation but not on bearing surface
- ❑ Bearing shells worn down to the base layer must be renewed

16 - Bolts

- ❑ For bearing cap
- ❑ Tightening torque and sequence ⇒ page 83

Protected by copyright. Copying for private or commercial purposes, in part or in whole, is not permitted unless authorised by AUDI AG. AUDI AG does not guarantee or accept any liability with respect to the correctness of information in this document. Copyright by AUDI AG.

Markings on crankshaft bearing caps

- ♦ Bearing 1: pulley end
- ♦ Bearing 4: gearbox end

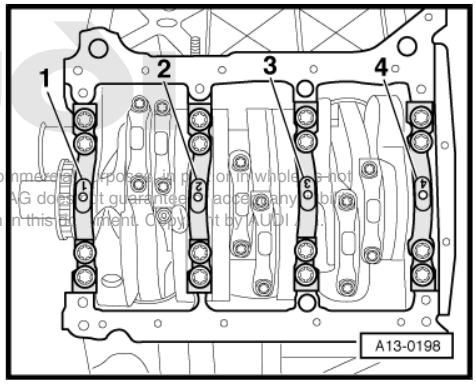

Installing crankshaft bearing caps

– Renew bolts -1 … 16- for main bearing cap.

– Insert dowel sleeves in bearing cap.

– Tighten bolts in 5 stages as follows:

1. Tighten bolts -1 ... 8- to 60 Nm.
2. Turn bolts -1 … 8- 90° further.
3. Tighten bolts -9 ... 16- to 60 Nm.
4. Turn bolts -9 … 16- 90° further.
5. Tighten bolts -A- to 28 Nm.

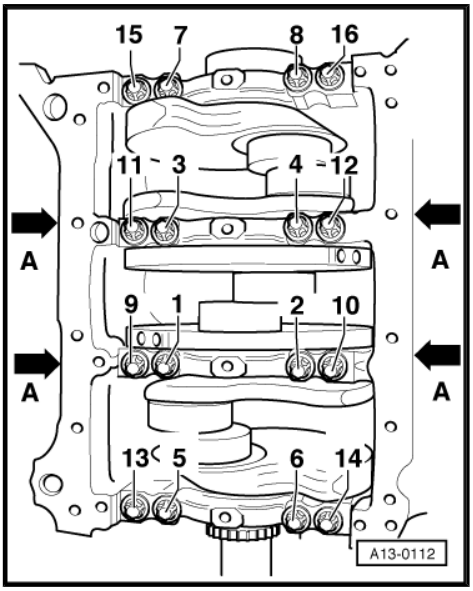

Fitting location of supports

- Arrow points in direction of travel.
- Support with mark -1- faces pulley end.
- Support with mark -4- faces flywheel end.

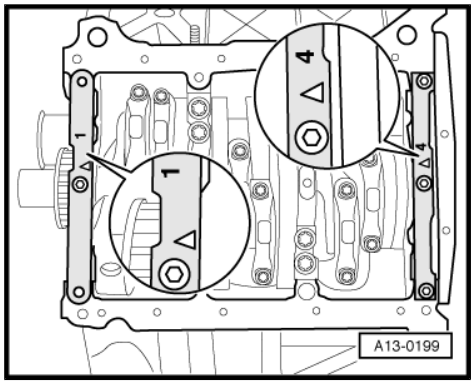

Centring sleeve for torque converter

- Short engines and reconditioned (exchange) engines as well as new and reconditioned crankshafts, are supplied without centring sleeve -arrow-.
- The centring sleeve must therefore be knocked in before fitting drive plate on vehicles with automatic gearbox.
- This centring sleeve must not be fitted on vehicles with manual gearbox.

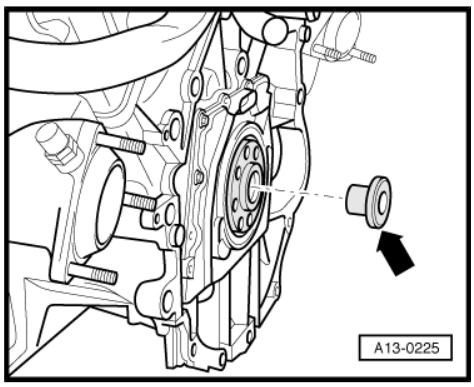

3.2 Crankshaft dimensions

Honing dimension	Crankshaft main bearing journal Ø mm	Conrod journal Ø mm
Basic dimension	65.00 –0.022 –0.042	58.00 –0.022 –0.042
Repair undersize	64.75 –0.022 –0.042	57.75 –0.022 –0.042

3.3 Measuring axial clearance of crankshaft

Special tools and workshop equipment required

♦ Universal dial gauge bracket -VW 387-

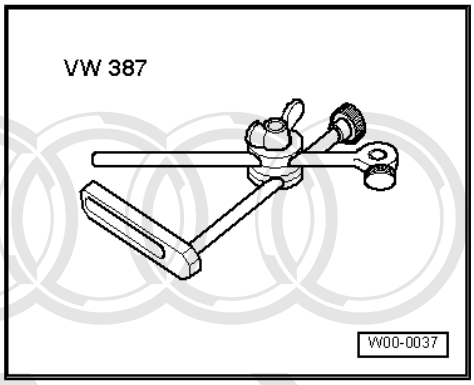

Protected by copyright. Copying for private or commercial purposes, in part or in whole, is not permitted unless authorised by AUDI AG. AUDI AG does not guarantee or accept any liability with respect to the correctness of information in this document. Copyright by AUDI AG.

♦ Dial gauge -VAS 6079-

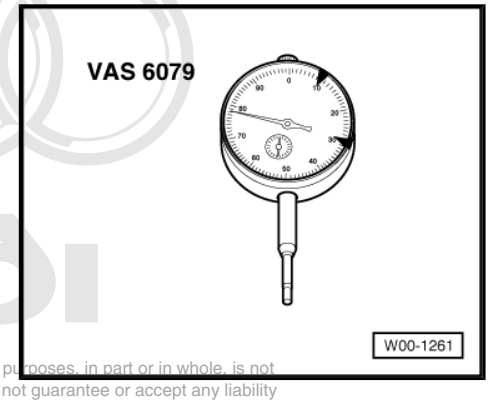

Protected by copyright. Copying for private or commercial purposes, in part or in whole, is not permitted unless authorised by AUDI AG. AUDI AG does not guarantee or accept any liability with respect to the correctness of information in this document. Copyright by AUDI AG.

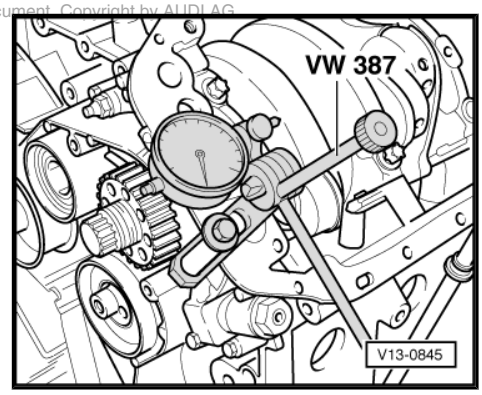

Procedure

– Secure dial gauge -VAS 6079- with universal dial gauge bracket -VW 387- to cylinder block as shown in illustration.
– Set dial gauge against crank web.
– Press crankshaft against dial gauge by hand and set gauge to “0”.
– Push crankshaft away from dial gauge and read off value.

Axial clearance:

• New: 0.090 ... 0.251 mm.
• Wear limit: 0.280 mm.

3.4 Measuring radial clearance of crankshaft

Special tools and workshop equipment required

♦ Plastigage

Procedure

Note

♦ *Mark used bearing shells for re-installation (but do not mark bearing surface).*
♦ *Bearing shells worn down to the base layer must be renewed.*

– Remove bearing cap and clean bearing cap and bearing journal.
– Place a length of Plastigage corresponding to the width of the bearing on the bearing journal or in the bearing shell.
• The Plastigage must be positioned in the centre of the bearing shell
– Fit bearing cap and tighten to 30 Nm without rotating crankshaft.
– Remove bearing cap again.
– Compare width of Plastigage with measurement scale.

Radial clearance:

• New: 0.018 ... 0.045 mm.
• Wear limit: 0.100 mm.

3.5 Removing and installing chain sprocket

Special tools and workshop equipment required

- Fitting sleeve -30 - 100-

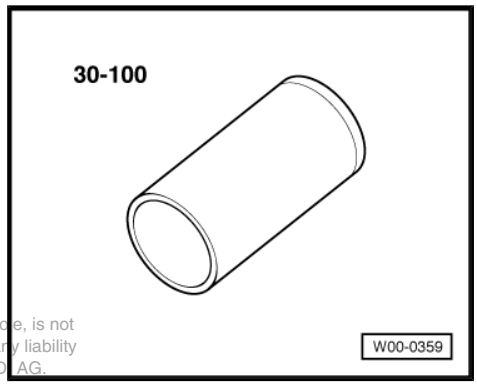

Protected by copyright. Copying for private or commercial purposes, in part or in whole, is not permitted unless authorised by AUDI AG. AUDI AG does not guarantee or accept any liability with respect to the correctness of information in this document. Copyright by AUDI AG.

- Two-arm puller, commercially available

Removing

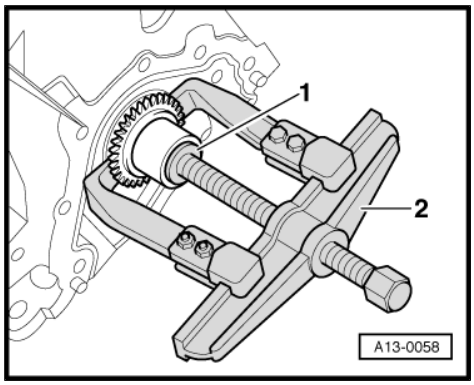

- Remove upper section of sump ⇒ page 153 .
- Remove sealing flange (pulley end) ⇒ page 75 .
- Remove chain tensioner and chain.
- Detach chain sprocket from crankshaft with puller -2-; use a suitable washer -1- to protect end of crankshaft.

Installing

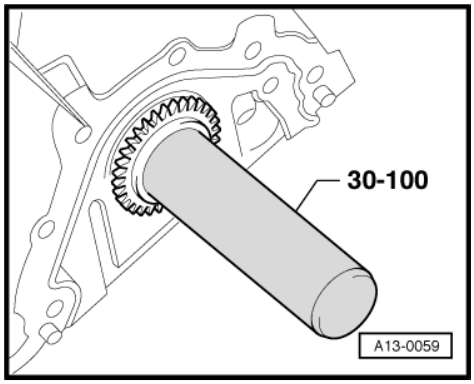

> ⚠ **WARNING**
>
> *Risk of burns.*
>
> - *Wear protective gloves.*

- Heat chain sprocket in oven for approx. 15 minutes to 220°C.
- Fit chain sprocket on end of crankshaft using pliers, and press onto crankshaft as far as the stop using drift sleeve -30 - 100- .

Remaining installation steps are carried out in reverse sequence; note the following:

- Install sealing flange (pulley end) ⇒ page 75 .
- Install sump (top section): vehicles with moulded gasket ⇒ page 161 , vehicles with liquid gasket ⇒ page 162 .

4 Dismantling and assembling pistons and conrods

4.1 Pistons and conrods - exploded view

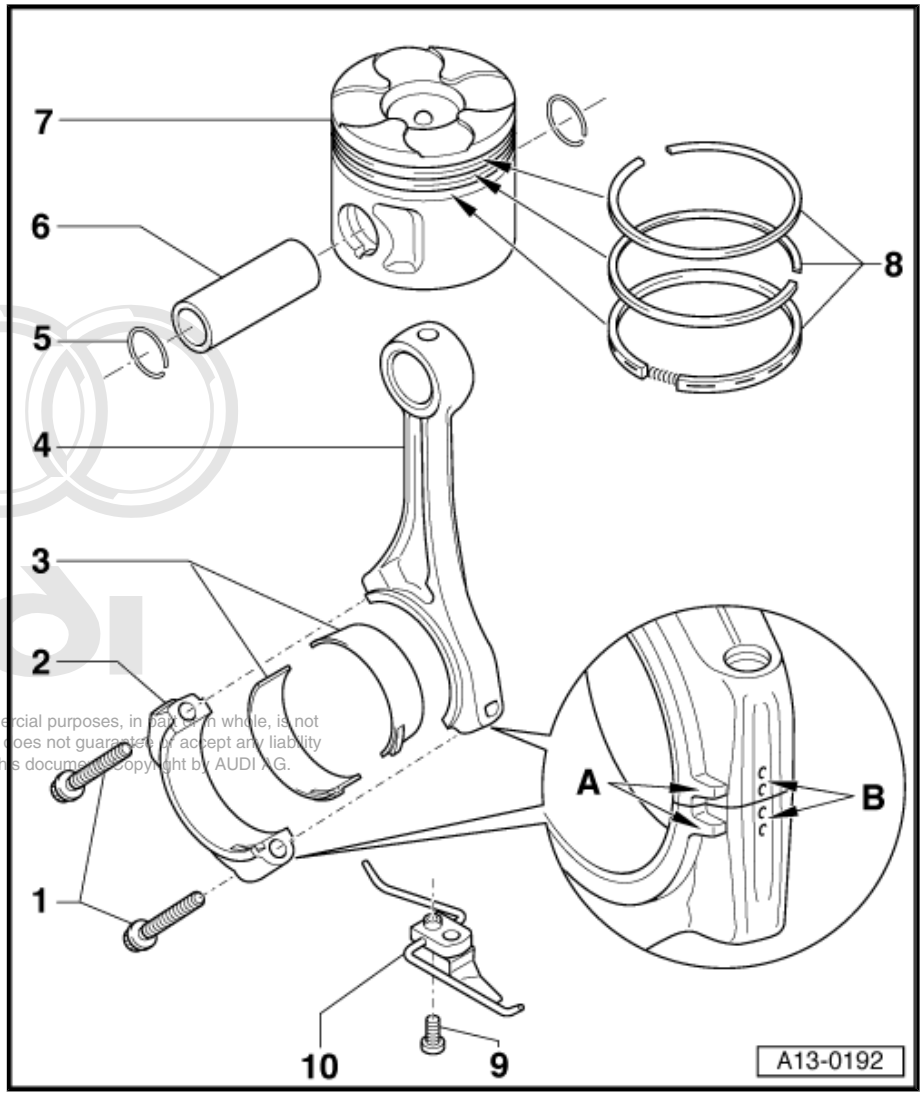

1 - Bolt

- ❑ 30 Nm + turn 90° further
- ❑ Renew
- ❑ Lubricate threads and contact surface

2 - Conrod bearing cap

- ❑ Do not interchange
- ❑ Mark cylinder allocation in colour -B- ⇒ page 89
- ❑ Installation position: Note position of lugs on casting -A- ⇒ page 90

3 - Bearing shells

- ❑ Note installation position
- ❑ Mark used bearing shells for re-installation but not on bearing surface
- ❑ Bearing shells worn down to the base layer must be renewed

Protected by copyright. Copying for private or commercial purposes, in part or in whole, is not permitted unless authorised by AUDI AG. AUDI AG does not guarantee or accept any liability with respect to the correctness of information in this document. Copyright by AUDI AG.

4 - Conrod

- ❑ Only renew as a complete set
- ❑ Mark cylinder number -B-
- ❑ Installation position: Note position of lugs on casting -A- ⇒ page 90
- ❑ Axial clearance for each conrod pair (when new): 0.20 ... 0.44 mm; wear limit: 0.60 mm
- ❑ Measuring radial clearance ⇒ page 93

5 - Circlip

- ❑ Renew

6 - Piston pin

- ❑ If difficult to remove, heat piston to approx. 60 °C
- ❑ Remove and install using drift -VW 222 A-

7 - Piston

- ❑ With combustion chamber
- ❑ Mark installation position and cylinder number ⇒ page 89
- ❑ Checking ⇒ page 88
- ❑ Arrow on piston crown faces centre of engine
- ❑ Install using piston ring clamp

- ❑ Renew piston if cracking is visible on piston crown or piston skirt
- ❑ Piston and cylinder dimensions ⇒ page 92
- ❑ Measuring cylinder bore ⇒ page 89
- ❑ Measuring piston projection at “TDC” ⇒ page 90

8 - Piston rings

- ❑ Offset gaps by 120°
- ❑ Use piston ring pliers to remove and install
- ❑ “TOP” must face towards piston crown
- ❑ Measuring ring gap ⇒ page 88
- ❑ Measuring ring-to-groove clearance ⇒ page 88

9 - Bolt

- ❑ 9 Nm

10 - Oil spray jet

- ❑ For piston cooling

Measuring piston ring gap

– Insert ring at right angle to cylinder wall from above and push down into lower cylinder opening approx. 15 mm from bottom of cylinder.

Piston ring	new mm	Wear limit mm
1st compression ring	0.20 … 0.40	0.8
2nd compression ring	0.80 … 1.00	1.4
Oil scraper ring	0.25 … 0.50	0.8

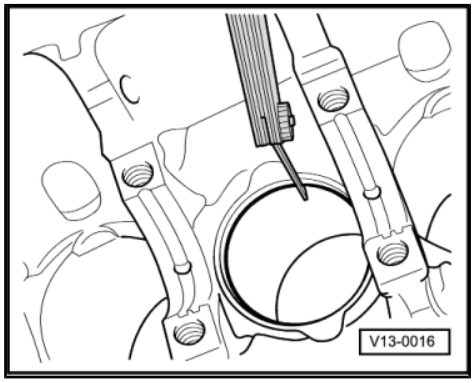

Checking ring-to-groove clearance

– Clean groove in piston before checking clearance.

Piston ring	new mm	Wear limit mm
1st compression ring	0.100 … 0.135	0.150
2nd compression ring	0.045 … 0.085	0.110
Oil scraper ring	0.025 … 0.065	0.090

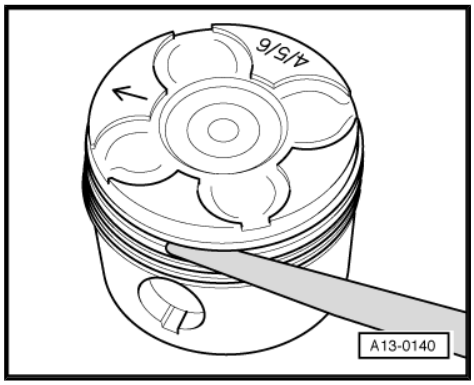

Checking piston

Protected by copyright. Copying for private or commercial purposes, in part or in whole, is not permitted unless authorised by AUDI AG. AUDI AG does not guarantee or accept any liability with respect to the correctness of information in this document. Copyright by AUDI AG.

– Using a micrometer (75 ... 100 mm), measure approx. 10 mm from the lower edge, perpendicular to the piston pin axis.

- Maximum deviation from nominal dimension: 0.05 mm.

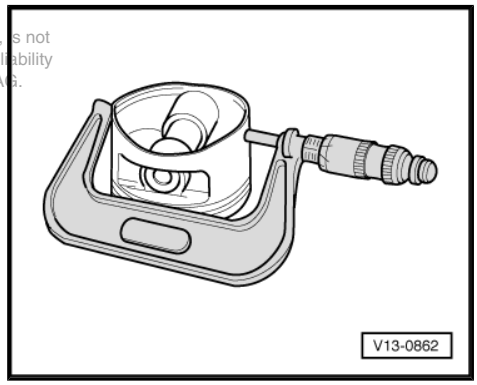

Checking cylinder bore

– Use a cylinder gauge -VAS 6078- to take measurements at 3 points in transverse direction -A- and in longitudinal direction -B-.

• Maximum deviation from nominal dimension: 0.08 mm.

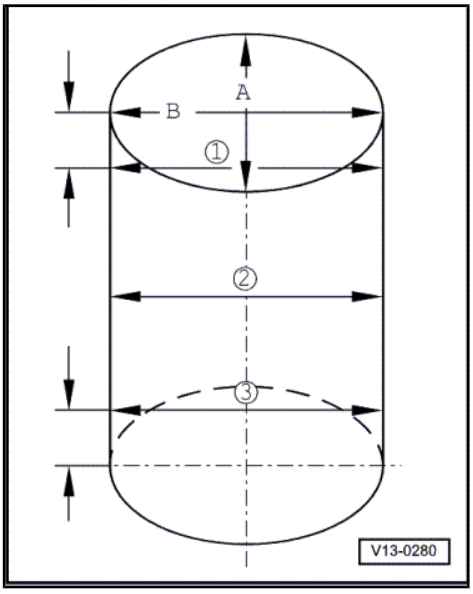

Piston installation position and piston/cylinder allocation

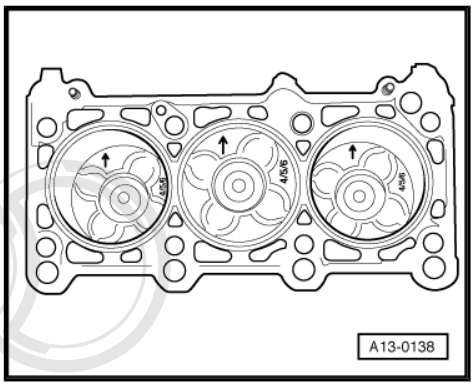

Note

Pistons in cylinders 1 ... 3 and 4 ... 6 are different.

• Installation position: arrows on piston crowns must point towards centre of engine

– Mark sequence with waterproof felt-tip pen on piston crown.

Caution

Do not damage the coating of the piston crown.

♦ ***Use a coloured pen to mark piston/cylinder allocation on piston crown for re-installation. Do not mark piston crown by means of centre punch, notch or the like.***

Protected by copyright. Copying for private or commercial purposes, in part or in whole, is not permitted unless authorised by AUDI AG. AUDI AG does not guarantee or accept any liability with respect to the correctness of information in this document. Copyright by AUDI AG.

With new pistons, cylinder assignment is shown by a coloured or engraved marking on piston crown.

♦ Pistons for cylinders 1, 2 and 3 are marked “1/2/3”

♦ Pistons for cylinders 4, 5 and 6 are marked “4/5/6”

♦ Piston identification ⇒ page 92

Marking conrods

– Use a coloured pen to mark matching conrods and conrod bearing caps with cylinder numbers -arrow- for re-installation.

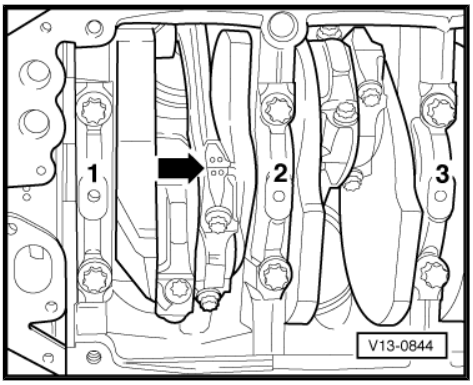

Note

♦ *Only renew conrods as a complete set.*

♦ *Do not interchange conrod bearings.*

Installation position of conrods

- Lugs on castings -arrows- ⇒ page 87 of conrods are located as shown in illustration.

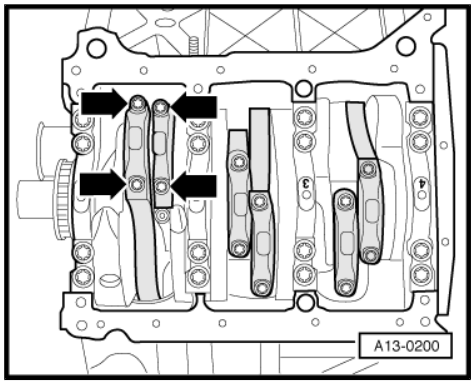

Note

The illustration shows the first conrod pair.

4.2 Measuring piston projection at “TDC”

Note

- *Piston projection at “TDC” must be measured when installing new pistons or a short engine. Depending upon piston projection, install the corresponding cylinder head gasket according to the table below:*
- *If the measured values for piston projection are not the same for all pistons, use the highest value to determine the correct size for the cylinder head gasket.*
- *The cylinder head gasket must be determined separately for each cylinder bank.*

Protected by copyright. Copying for private or commercial purposes, in part or in whole, is not permitted unless authorised by AUDI AG. AUDI AG does not guarantee or accept any liability with respect to the correctness of information in this document. Copyright by AUDI AG.

Special tools and workshop equipment required

- Measuring tool -VW 382/7-
- Measuring plate - VW 385/17-
- Dial gauge -VAS 6079-

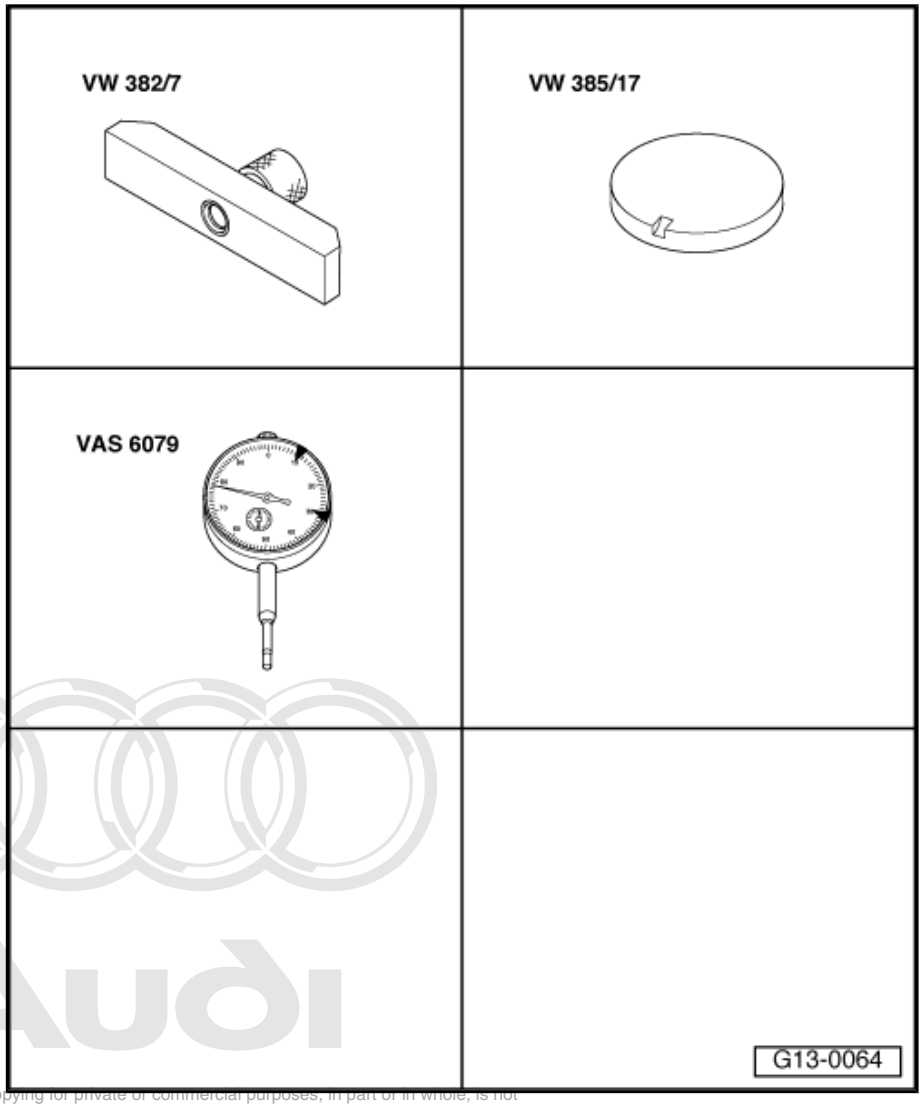

Protected by copyright. Copying for private or commercial purposes, in part or in whole, is not permitted unless authorised by AUDI AG. AUDI AG does not guarantee or accept any liability with respect to the correctness of information in this document. Copyright by AUDI AG.

Procedure

– Secure dial gauge -VAS 6079- with measuring bridge - VW 382/7- and measuring plate -VW 385/17- to cylinder block as shown in illustration.

– Measure projection at each piston at both locations marked with -arrows- (seen in longitudinal direction of engine: at front and rear of piston).

Piston projection above top surface of cylinder block in mm	Identification (No. of holes)
0.39 … 0.49	1
0.49 … 0.54	2
0.54 … 0.65	3

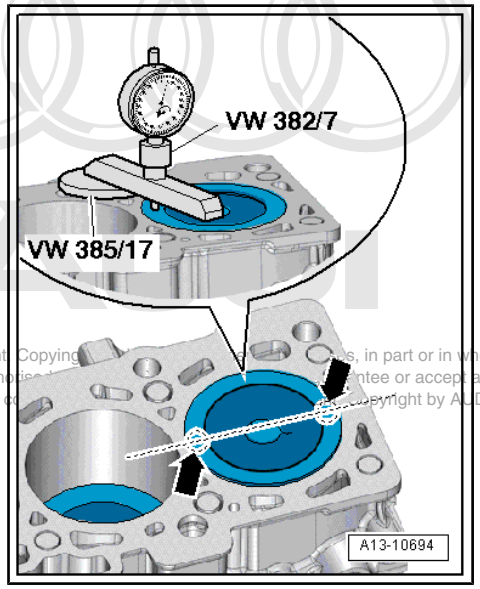

Protected by copyright. Copying ... s, in part or in whole, is not permitted unless autho... ntee or accept any liability with respect to the c... pyright by AUDI AG.

Identification of cylinder head gasket

1 - Holes

2 - Part number

3 - Production code (can be disregarded)

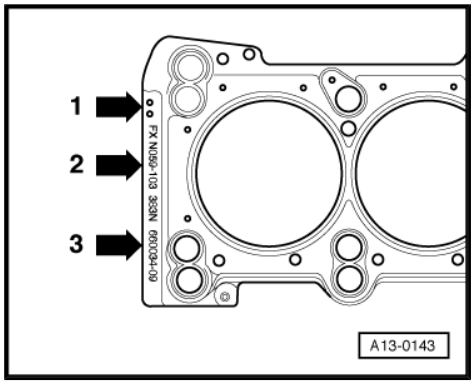

4.3 Piston and cylinder dimensions

Piston identification		Piston ⌀ mm	Cylinder bore ⌀ mm
Basic dimension	I [1]	78.253 … 78.261 [2]	78.306 … 78.310
	II [1]	78.259 … 78.267 [2]	78.310 … 78.314
Intermediate size	I [1]	78.293 … 78.301 [2]	78.346 … 78.350
	II [1]	78.299 … 78.307 [2]	78.350 … 78.354

- [1] Piston identification is stamped on piston crown ⇒ page 92 .
- [2] Dimensions not including coating (thickness 0.02 mm). Coating on piston skirt will wear down in service.

Piston identification on piston crown

Piston identification is stamped on piston crowns -arrow-.

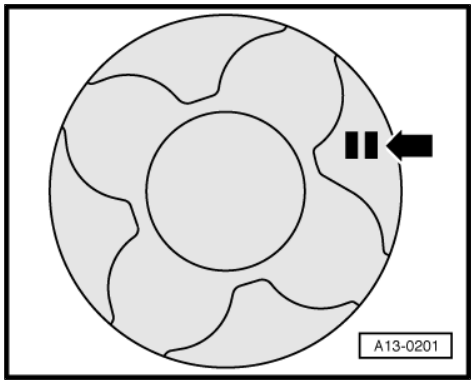

Note

Replacement pistons are only available with basic dimension.

4.4 Measuring radial clearance of conrods

Special tools and workshop equipment required

- Plastigage

Procedure

Note

- *Mark used bearing shells for re-installation (but do not mark bearing surface).*
- *Bearing shells worn down to the base layer must be renewed.*

– Remove conrod bearing cap. Clean bearing cap and bearing journal.

– Place a length of Plastigage corresponding to the width of the bearing on the bearing journal or in the bearing shell.

– Fit conrod bearing caps and tighten to 30 Nm without rotating crankshaft.

– Remove conrod bearing cap again.

– Compare width of Plastigage with measurement scale.

Radial clearance:

- New: 0.015 ... 0.062 mm.
- Wear limit: 0.12 mm.

– Renew conrod bolts.

Protected by copyright. Copying for private or commercial purposes, in part or in whole, is not permitted unless authorised by AUDI AG. AUDI AG does not guarantee or accept any liability with respect to the correctness of information in this document. Copyright by AUDI AG.

15 – Cylinder head, valve gear

1 Cylinder head

1.1 Cylinder head - exploded view

Protected by copyright. Copying for private or commercial purposes, in part or in whole, is not permitted unless authorised by AUDI AG. AUDI AG does not guarantee or accept any liability with respect to the correctness of information in this document. Copyright by AUDI AG.

Note

- *Never set down cylinder head on workbench, as this could damage injectors and glow plugs.*
- *A pressure limiting valve (for lubrication points in cylinder head) is screwed into each cylinder head. Tightening torque: 25 Nm.*

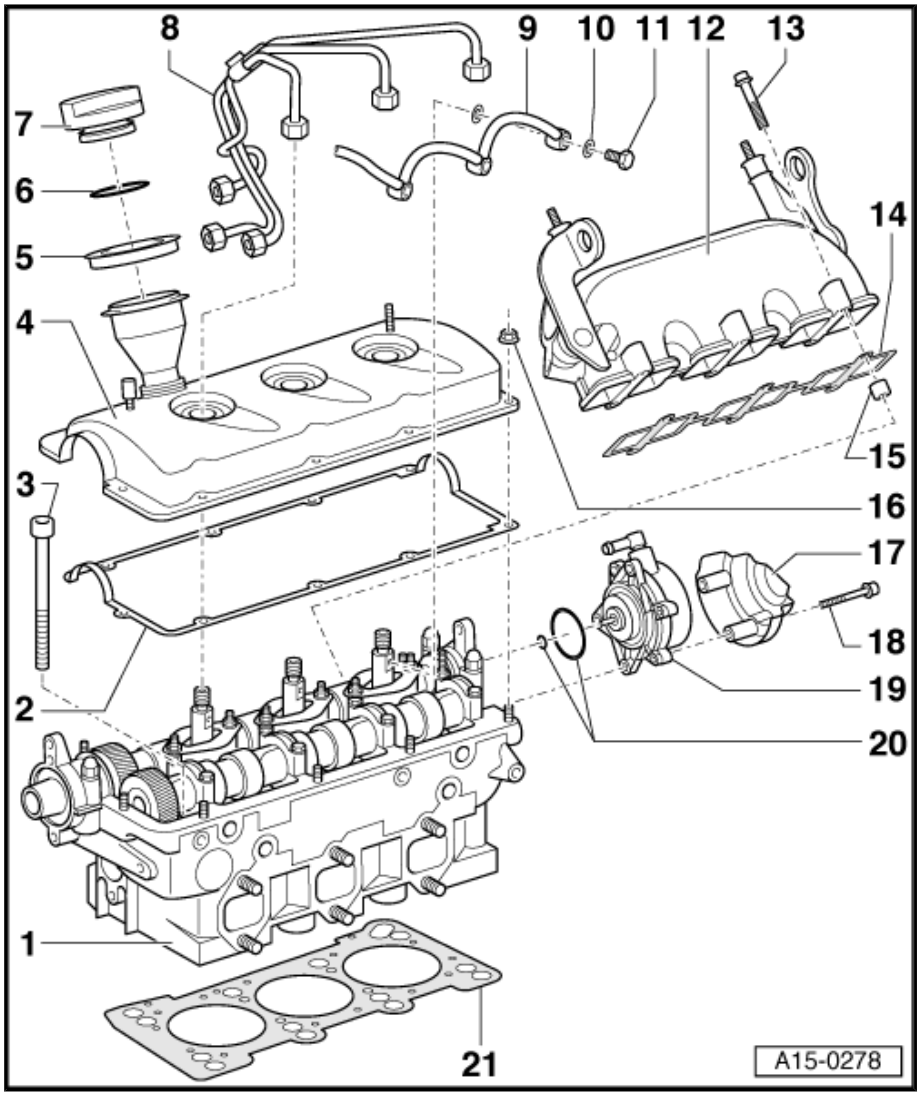

1 - Cylinder head

- ❑ Removing: left-side ⇒ page 108 ; right-side ⇒ page 110
- ❑ Checking for distortion ⇒ page 96
- ❑ Cylinder heads must not be reworked on TDI engines
- ❑ Installing ⇒ page 114
- ❑ If renewed, change coolant and engine oil

2 - Gasket

- ❑ Renew if damaged or leaking
- ❑ Before fitting, seal transitions at outer bearing caps ⇒ page 96

3 - Bolt

- ❑ Renew
- ❑ Note correct sequence when slackening; cylinder head (left-side) ⇒ page 110 , cylinder head (right-side) ⇒ page 114
- ❑ Note correct sequence when tightening ⇒ page 118

4 - Cylinder head cover

- ❑ Removing and installing: left-side ⇒ page 102 , right-side ⇒ page 104
- ❑ Renew cylinder head cover if injector seals are damaged

5 - Deflector ring

- ❑ Renew if damaged

6 - Seal

- ❑ Renew if damaged or leaking

7 - Filler cap

8 - Injector pipes

- ❑ Use ring spanner -3035- for removal
- ❑ Always remove pipework complete
- ❑ Do not alter shape
- ❑ Tighten to 30 Nm

9 - Return pipe

10 - Seal

- ❑ Renew

11 - Banjo bolt

- ❑ 5 Nm

12 - Intake manifold

- ❑ Removing and installing intake manifold (front section) ⇒ page 97
- ❑ Removing and installing intake manifold (left-side) ⇒ page 98
- ❑ Removing and installing intake manifold (right side) ⇒ page 100

13 - Bolt

- ❑ 10 Nm
- ❑ Tighten in stages and in diagonal sequence

14 - Gasket

- ❑ Renew

15 - Dowel sleeve

- ❑ 2x
- ❑ Take care to prevent dowel sleeves dropping into intake ports

16 - Nut

- ❑ Tighten in stages and in diagonal sequence
- ❑ 10 Nm
- ❑ Re-tighten to 10 Nm when engine is warm

Protected by copyright. Copying for private or commercial purposes, in part or in whole, is not permitted unless authorised by AUDI AG. AUDI AG does not guarantee or accept any liability with respect to the correctness of information in this document. Copyright by AUDI AG.

17 - Heat shield

- ❑ For exhauster pump

18 - Bolt

- ❑ 10 Nm

19 - Exhauster pump

- ❑ For brake servo
- ❑ Removing and installing ⇒ page 97

20 - O-rings

- ❑ For exhauster pump
- ❑ Renew

21 - Cylinder head gasket

- ❑ Different thicknesses
- ❑ Note marking ⇒ page 96
- ❑ Renewing: cylinder head (left-side) ⇒ page 108 , cylinder head (right-side) ⇒ page 110
- ❑ Installation position: The word “oben” (top) or the part number should face towards the cylinder head
- ❑ If renewed, change coolant and engine oil

Checking cylinder head for distortion

– Use straight edge and feeler gauge to measure for distortion at several points.

• Max. permissible distortion: 0.1 mm

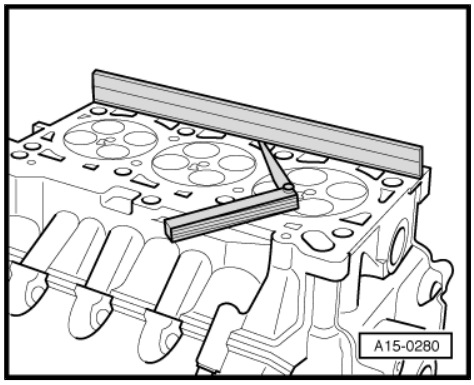

Identification of cylinder head gasket

1 - Holes

2 - Part number

3 - Production code (can be disregarded)

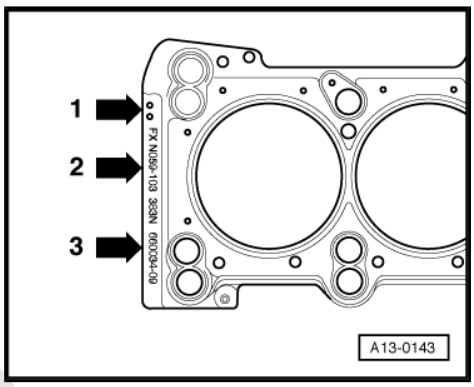

Note

Cylinder head gaskets of different thicknesses are fitted depending on the amount of piston projection *⇒ page 90* *. Fit new gasket with same identification if only gasket is renewed.*

Sealing transitions at outer bearing caps in cylinder head

– Clean sealing surfaces; they must be free of oil and grease.

– Fit semi-circular seal -1-.

• Installation position: Parts number should be visible from outside; straight side of sealing surface should be flush with sealing surface of cylinder head.

– Draw a bead of sealant (∅ approx. 3 mm) over the semi-circular seal so that about 5 mm projects at both ends -right arrow-.

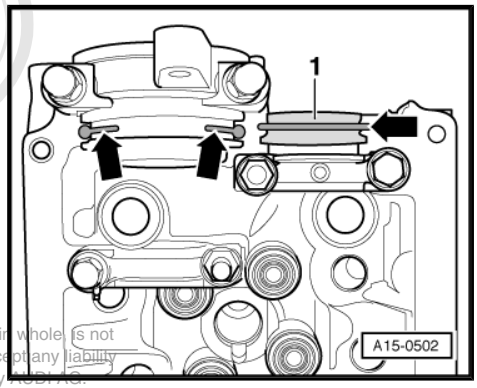

Protected by copyright. Copying for private or commercial purposes, in part or in whole, is not permitted unless authorised by AUDI AG. AUDI AG does not guarantee or accept any liability with respect to the correctness of information in this document. Copyright by AUDI AG.

– Apply a drop of sealant (∅ approx. 5 mm) to all sealing points at joints between cylinder head and bearing caps ⇒ Electronic parts catalogue .

– Apply sealant bead (∅ approx. 3 mm) up to approx. half the height of the bearing caps -arrows-.

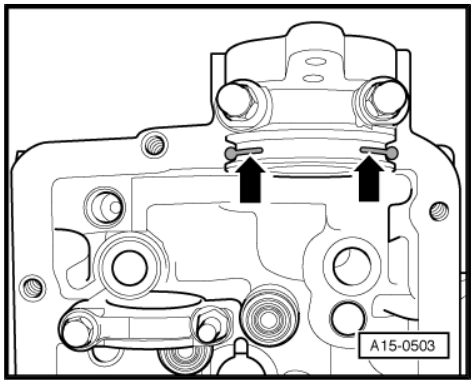

Removing and installing exhauster pump

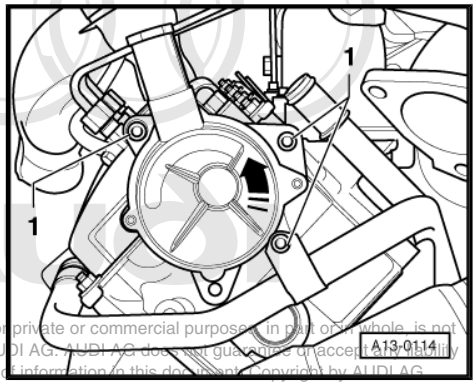

– Remove bolts -1- for exhauster pump with heat shield on cylinder head (left-side) and turn pump in direction of -arrow-.

– Fit new O-rings.

Tightening torque

Component	Nm
Exhauster pump to cylinder head	10

Protected by copyright. Copying for private or commercial purposes, in part or in whole, is not permitted unless authorised by AUDI AG. AUDI AG does not guarantee or accept any liability with respect to the correctness of information in this document. Copyright by AUDI AG.

1.2 Removing and installing intake manifold (front section)

Removing

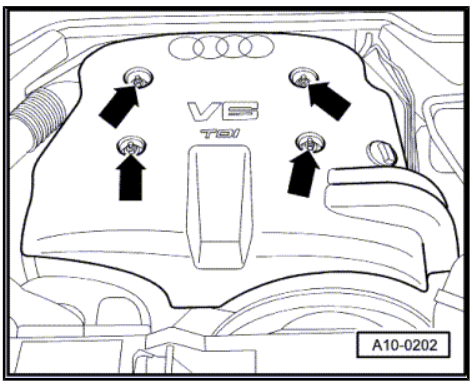

– Detach caps on engine cover panel.

– Unbolt and remove engine cover panel -arrows-.

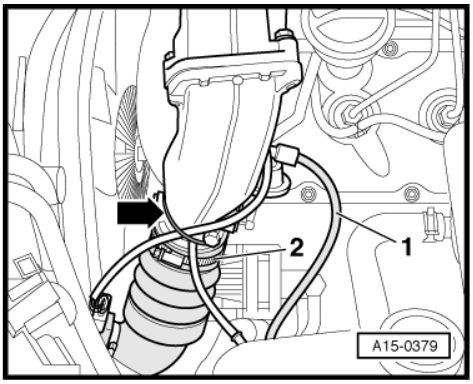

– If fitted, disconnect vacuum line -1- at cut-off flap connection.

– Detach air hose (left-side) -2- from cut-off flap connection.

– Move lines clear -arrow-.

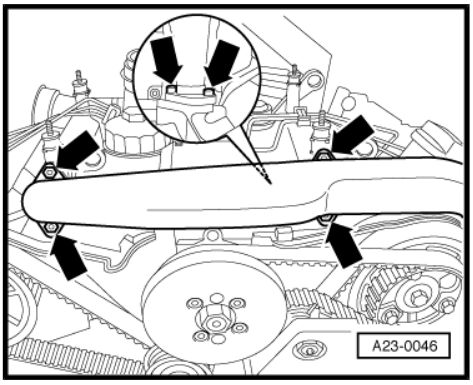

– Remove intake manifold (front section) -arrows-.

Installing

Installation is carried out in the reverse order; note the following:

Note

Renew gaskets and seals.

Tightening torques

Component	Nm
Front section of intake manifold to left and right section of intake manifold	10
Exhaust gas recirculation pipe to front section of intake manifold	10

1.3 Removing and installing intake manifold (left-side)

Special tools and workshop equipment required

- Ring spanner -3035-

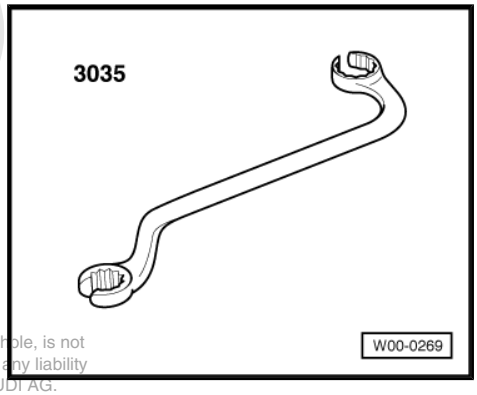

Protected by copyright. Copying for private or commercial purposes, in part or in whole, is not permitted unless authorised by AUDI AG. AUDI AG does not guarantee or accept any liability with respect to the correctness of information in this document. Copyright by AUDI AG.

- Torque wrench -V.A.G 1331- with ratchet -V.A.G 1331/1-

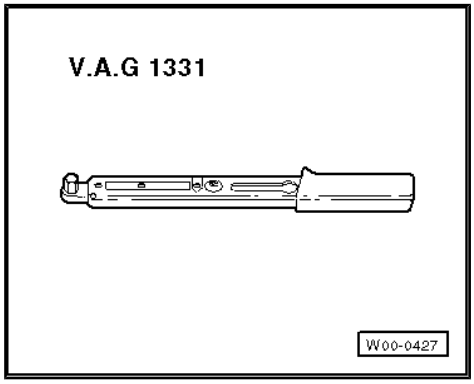

- Tool insert AF 17 -V.A.G 1331/6-

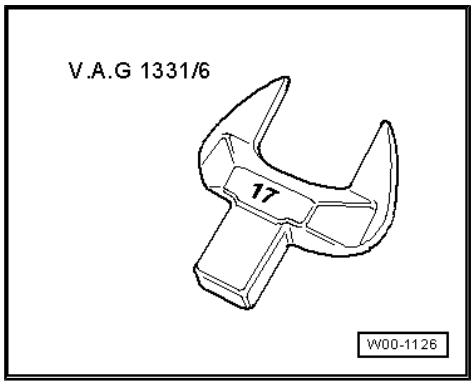

- Socket -T40055-

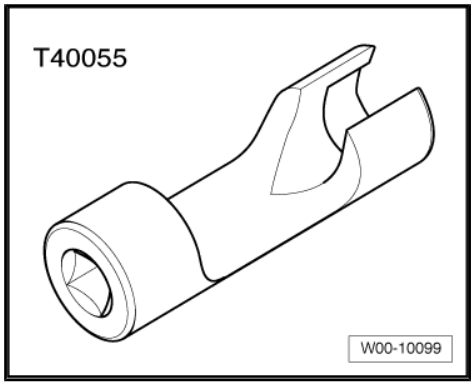

Removing

– Remove intake manifold (front section) ⇒ page 97 .

– Remove heat shield above turbocharger -arrows-.

– Mark injector pipes according to cylinder (e.g. with felt-tip pen).

– Disconnect injector pipes one by one with ring spanner -3035- .

– Move wiring harness near intake manifold (left-side) clear to the side.

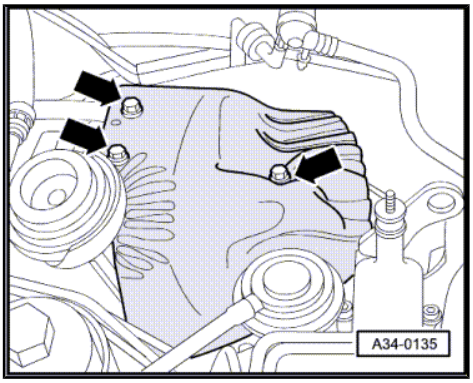

– Remove intake manifold (left-side) -arrows-.

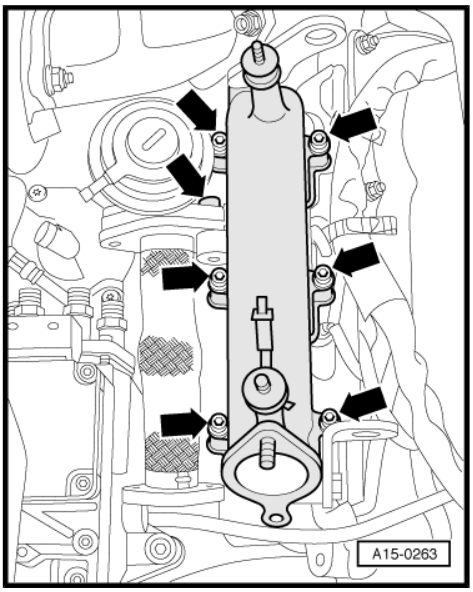

Note

♦ *Watch the two dowel sleeves when removing intake manifold.*

♦ *Block off intake ports in cylinder head with clean rags.*

Installing

Installation is carried out in the reverse order; note the following:

Note

Renew gaskets and seals.

– Watch the two dowel sleeves when installing intake manifold.

– Install injector pipes one after the other (from bottom to top).

• Ensure stress-free installation of injector pipes.

– Tighten with torque wrench -V.A.G 1331- , and tool insert AF 17 -V.A.G 1331/6- .

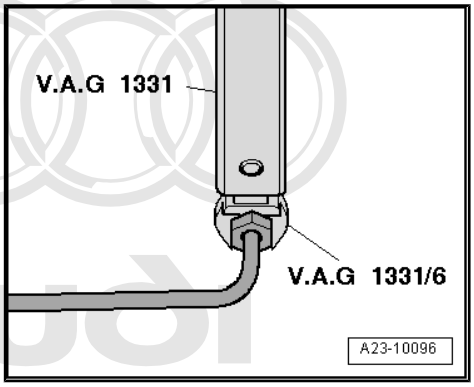

Protected by copyright. Copying for private or commercial purposes, in part or in whole, is not permitted unless authorised by AUDI AG. AUDI AG does not guarantee or accept any liability with respect to the correctness of information in this document. Copyright by AUDI AG.

– Tighten with torque wrench -V.A.G 1331- , ratchet -V.A.G 1331/1- and socket -T40055- .
– Install intake manifold (front section) ⇒ page 97 .
– Check fuel system for leaks ⇒ page 4 .

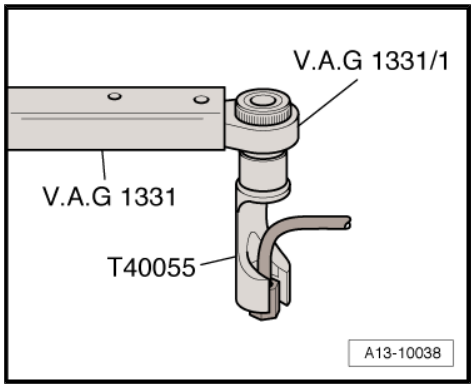

Tightening torques

Component		Nm
Intake manifold (left-side) to cylinder head		10
Mechanical exhaust gas recirculation valve to intake manifold		22
Injector pipes to	Injectors	30
	Injection pump	30
Heat shield to turbocharger		10

1.4 Removing and installing intake manifold (right-side)

Special tools and workshop equipment required

♦ Ring spanner -3035-

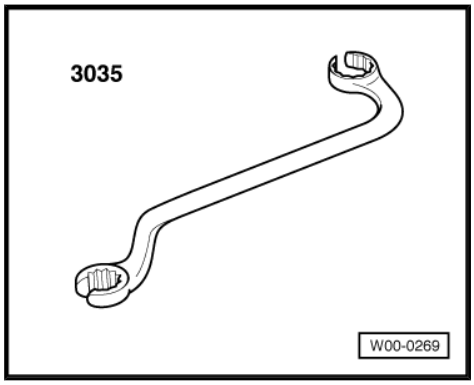

♦ Torque wrench -V.A.G 1331- with ratchet -V.A.G 1331/1-

Protected by copyright. Copying for private or commercial purposes, in part or in whole, is not permitted unless authorised by AUDI AG. AUDI AG does not guarantee or accept any liability with respect to the correctness of information in this document. Copyright by AUDI AG.

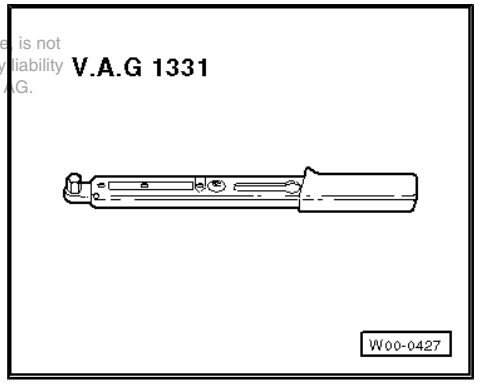

♦ Tool insert AF 17 -V.A.G 1331/6-

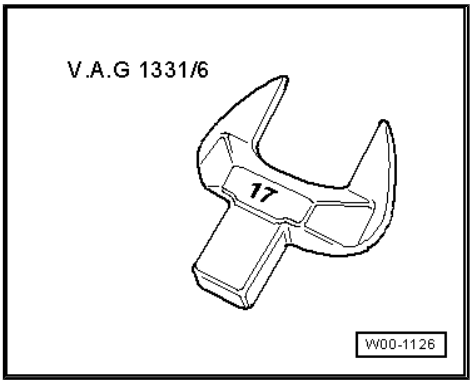

♦ Socket -T40055-

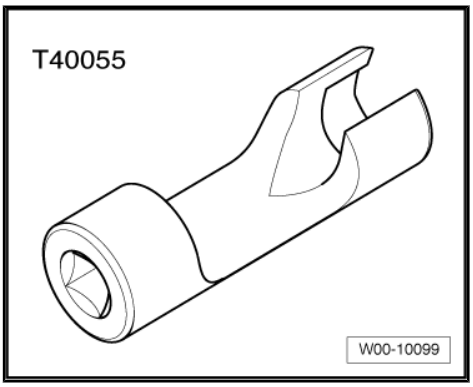

Removing

– Remove intake manifold (front section) ⇒ page 97 .

– Disconnect vacuum hoses -arrows- from turbocharger and mechanical exhaust gas recirculation valve.

– Mark injector pipes according to cylinder (e.g. with felt-tip pen).

– Disconnect injector pipes one by one with ring spanner -3035- .

– Move wiring harness and fuel pipe near intake manifold (right-side) clear to the side.

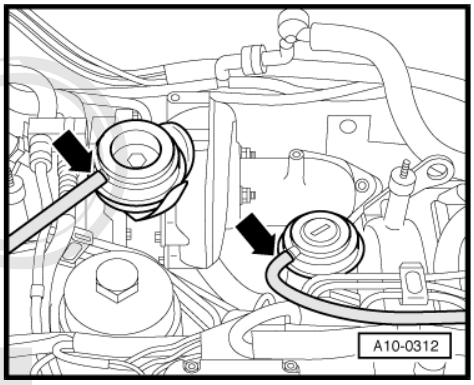

– Remove intake manifold (right-side) -arrows-.

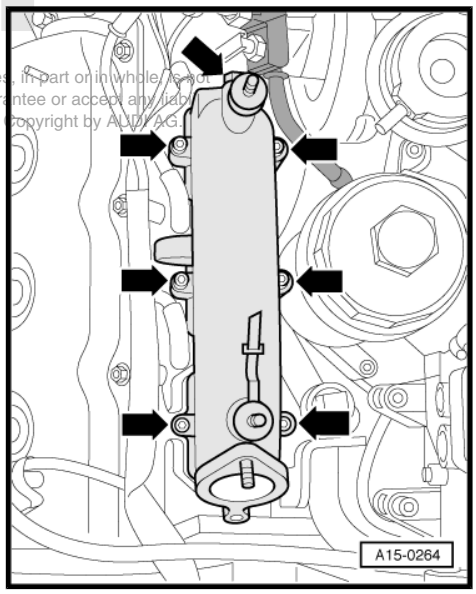

Protected by copyright. Copying for private or commercial purposes, in part or in whole, is not permitted unless authorised by AUDI AG. AUDI AG does not guarantee or accept any liability with respect to the correctness of information in this document. Copyright by AUDI AG.

Note

♦ *Watch the two dowel sleeves when removing intake manifold.*

♦ *Block off intake ports in cylinder head with clean rags.*

Installing

Installation is carried out in the reverse order; note the following:

Note

Renew gaskets and seals.

– Watch the two dowel sleeves when installing intake manifold.

– Install injector pipes one after the other (from bottom to top).

• Ensure stress-free installation of injector pipes.

– Tighten with torque wrench -V.A.G 1331- , and tool insert AF 17 -V.A.G 1331/6- .

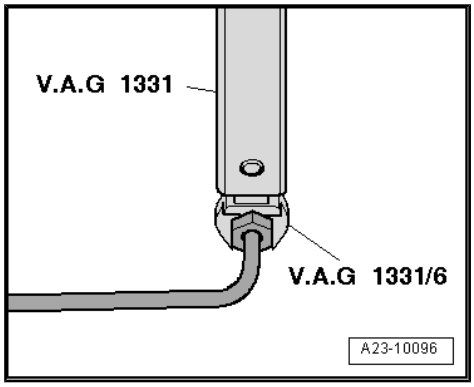

– Tighten with torque wrench -V.A.G 1331- , ratchet -V.A.G 1331/1- and socket -T40055- .
– Install intake manifold (front section) ⇒ page 97 .
– Check fuel system for leaks ⇒ page 4 .

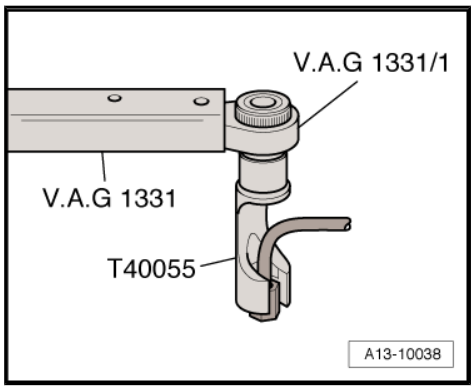

Tightening torques

Component		Nm
Intake manifold (right-side) to cylinder head		10
Oil pipe to intake manifold		22
Injector pipes to	Injectors	30
	Injection pump	30

1.5 Removing and installing cylinder head cover (left-side)

Special tools and workshop equipment required

♦ Ring spanner -3035-

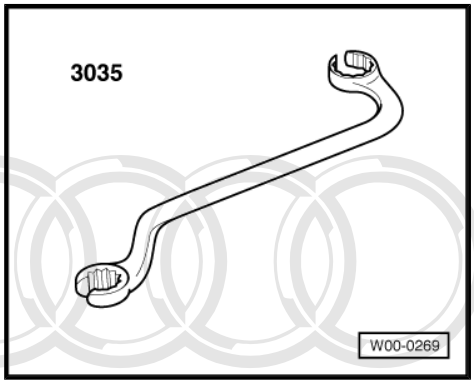

♦ Torque wrench -V.A.G 1331- with ratchet -V.A.G 1331/1-

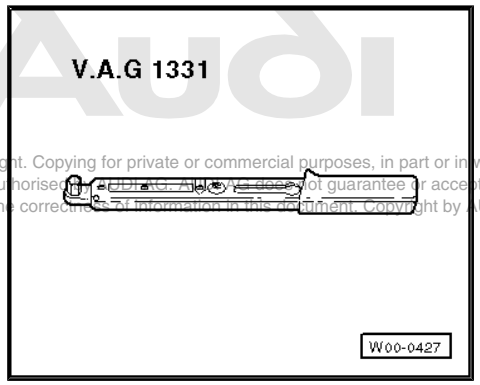

Protected by copyright. Copying for private or commercial purposes, in part or in whole, is not permitted unless authorised by AUDI AG. AUDI AG does not guarantee or accept any liability with respect to the correctness of information in this document. Copyright by AUDI AG.

- Tool insert AF 17 -V.A.G 1331/6-

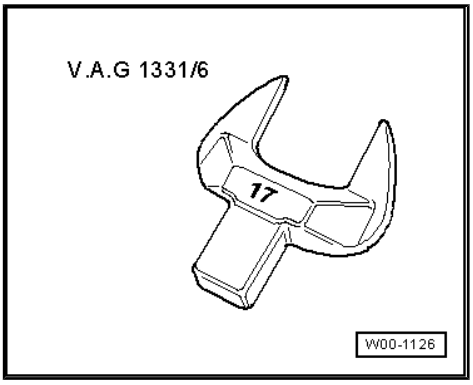

- Socket -T40055-

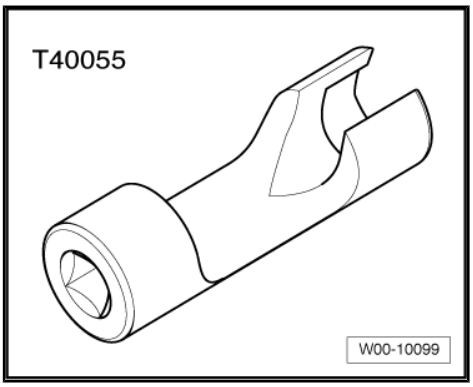

- Sealant ⇒ Electronic parts catalogue

Removing

– Remove intake manifold (front section) ⇒ page 97 .

– Move wiring harness in area of cylinder head cover clear to one side.

– Mark injector pipes according to cylinder (e.g. with felt-tip pen).

– Disconnect injector pipes one by one with ring spanner -3035- .

Protected by copyright. Copying for private or commercial purposes, in part or in whole, is not permitted unless authorized by AUDI AG. AUDI AG does not guarantee or accept any liability with respect to the correctness of information in this document. Copyright by AUDI AG.

– Disconnect return pipe from injectors -1-.

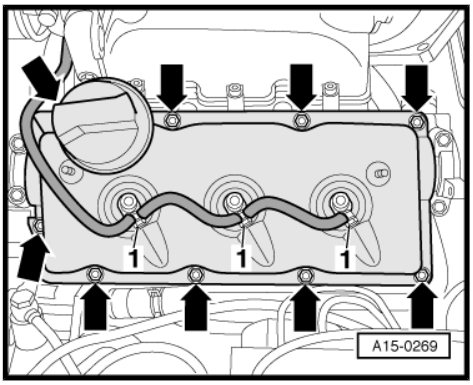

– Remove nuts -arrows- and detach cylinder head cover.

Installing

Installation is carried out in the reverse order; note the following:

Note

- *Renew seals for return pipes.*
- *Renew cylinder head cover gaskets if damaged.*
- *Renew cylinder head cover if injector seals are damaged.*

– Clean sealing surfaces; they must be free of oil and grease.

– Fit semi-circular seal -1-.

• Installation position: Parts number should be visible from outside; straight side of sealing surface should be flush with sealing surface of cylinder head.

– Draw a bead of sealant (∅ approx. 3 mm) over the semi-circular seal so that about 5 mm projects at both ends -right arrow-.

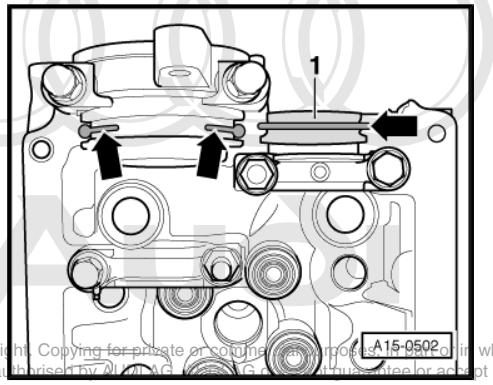

Protected by copyright. Copying for private or commercial purposes, in part or in whole, is not permitted unless authorised by AUDI AG. AUDI AG does not guarantee or accept any liability with respect to the correctness of information in this document. Copyright by AUDI AG.

– Apply a drop of sealant (∅ approx. 5 mm) to all sealing points at joints between cylinder head and bearing caps.

– Apply sealant bead (∅ approx. 3 mm) up to approx. half the height of the bearing caps -arrows-.

– Tighten nuts for cylinder head cover diagonally and in stages.

– Install injector pipes one after the other (from bottom to top).

• Ensure stress-free installation of injector pipes.

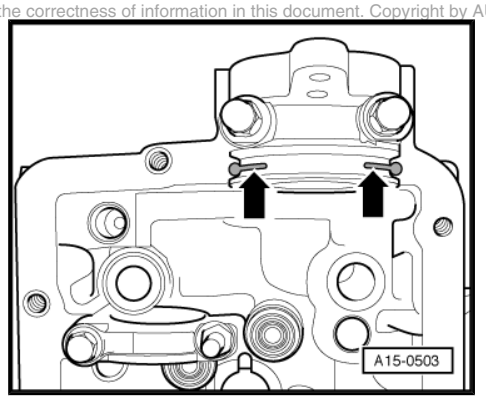

– Tighten with torque wrench -V.A.G 1331- , and tool insert AF 17 -V.A.G 1331/6- .

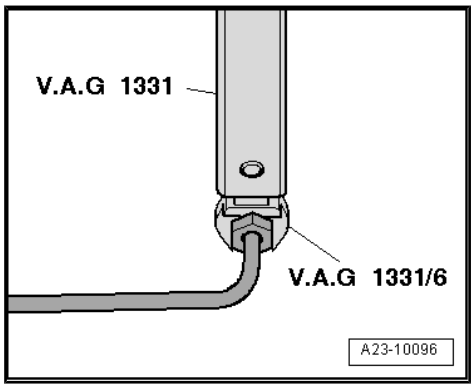

– Tighten with torque wrench -V.A.G 1331- , ratchet -V.A.G 1331/1- and socket -T40055- .

– Install intake manifold (front section) ⇒ page 97 .

– Check fuel system for leaks ⇒ page 4 .

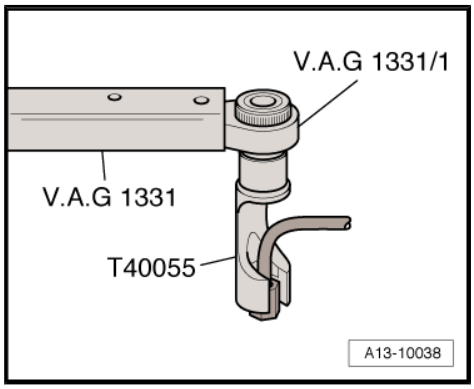

Tightening torques

Component		Nm
Cylinder head cover to cylinder head		10 [1]
Return pipes to injectors		5
Injector pipes to	Injectors	30
	Injection pump	30

• [1] Tighten to 10 Nm after engine is warm.

1.6 Removing and installing cylinder head cover (right-side)

Special tools and workshop equipment required

- Ring spanner -3035-

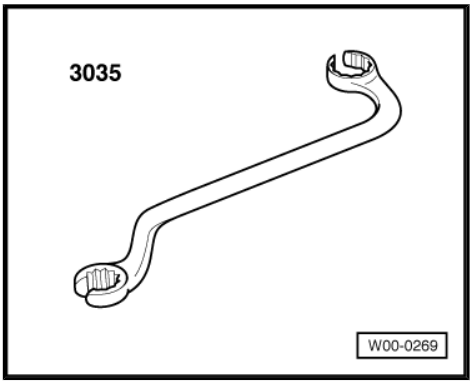

- Torque wrench -V.A.G 1331- with ratchet -V.A.G 1331/1-

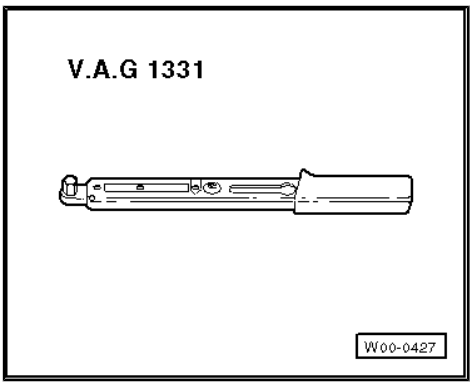

- Tool insert AF 17 -V.A.G 1331/6-

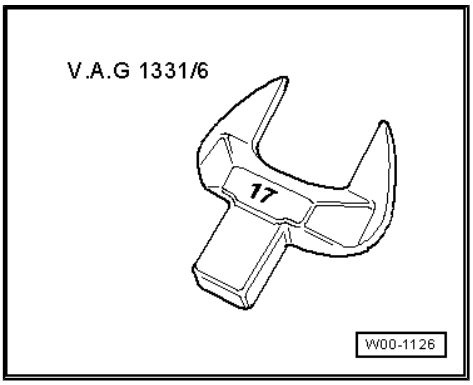

- Socket -T40055-

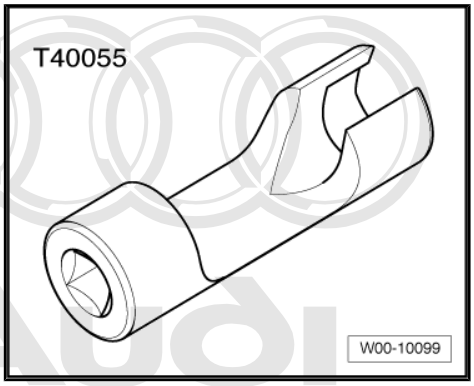

- Sealant ⇒ Electronic parts catalogue

Protected by copyright. Copying for private or commercial purposes, in part or in whole, is not permitted unless authorised by AUDI AG. AUDI AG does not guarantee or accept any liability with respect to the correctness of information in this document. Copyright by AUDI AG.

Removing

– Detach caps on engine cover panel.

– Unbolt and remove engine cover panel -arrows-.

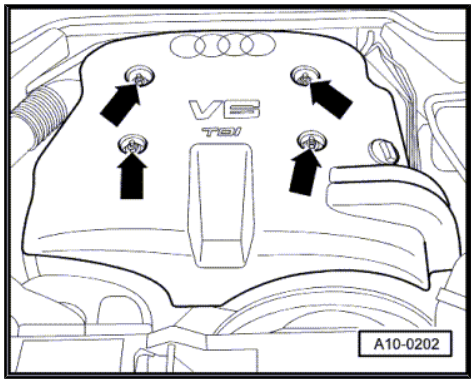

– Remove air hose from air cleaner -arrows-.

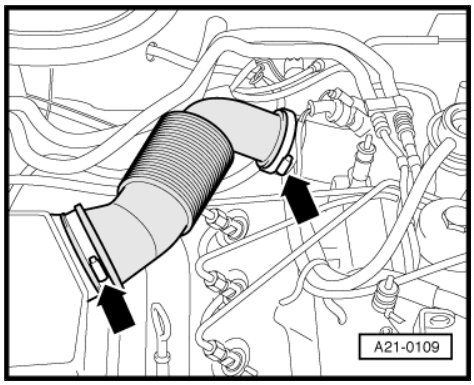

– Remove hose leading to turbocharger -arrows-.

– Mark injector pipes according to cylinder (e.g. with felt-tip pen).

– Disconnect injector pipes one by one with ring spanner -3035- .

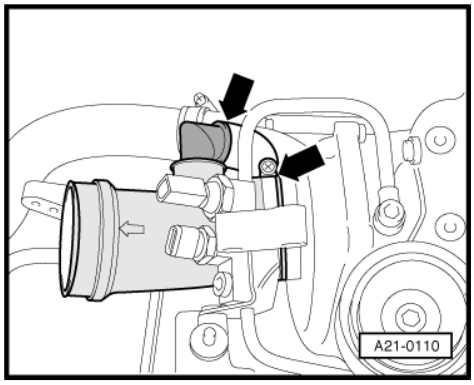

– Disconnect vacuum hoses -arrows- from turbocharger and mechanical exhaust gas recirculation valve.

– Move hoses clear.

– Unfasten cable clamp at cylinder head cover and move wiring harness clear to one side.

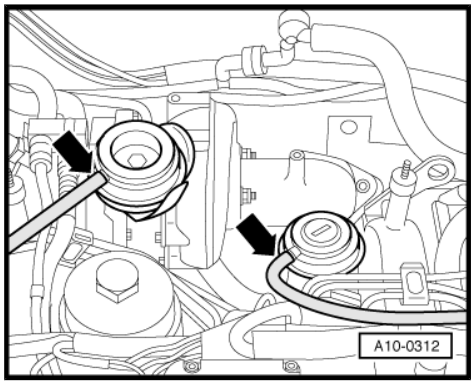

Protected by copyright. Copying for private or commercial purposes, in part or in whole, is not permitted unless authorised by AUDI AG. AUDI AG does not guarantee or accept any liability with respect to the correctness of information in this document. Copyright by AUDI AG.

– Remove air intake pipe between turbocharger and charge air cooler -arrows-.
– Unscrew guide tube for dipstick at cylinder head.

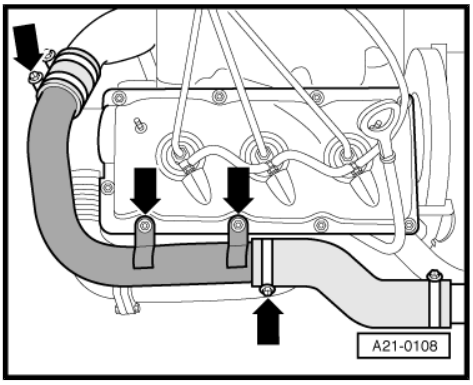

Note

The guide tube for the engine oil dipstick must not be lifted out completely, as otherwise the O-ring at the base of the guide tube will have to be renewed.

– Disconnect return pipe from injectors -1-.
– Remove nuts -arrows- and detach cylinder head cover.

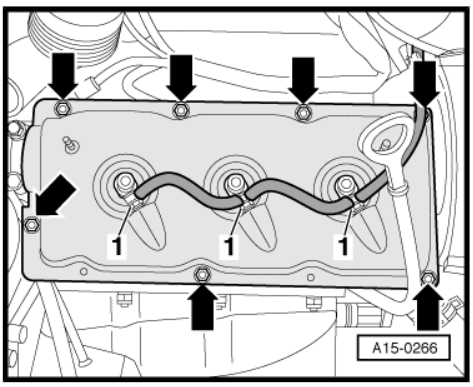

Installing

Installation is carried out in the reverse order; note the following:

Note

- *Renew seals for return pipes.*
- *Renew cylinder head cover gaskets if damaged.*
- *Renew cylinder head cover if injector seals are damaged.*

– Clean sealing surfaces; they must be free of oil and grease.
– Fit semi-circular seal -1-.
• Installation position: Part number should be visible from outside; straight side of sealing surface should be flush with sealing surface of cylinder head.
– Draw a bead of sealant (∅ approx. 3 mm) over the semi-circular seal so that about 5 mm projects at both ends -right arrow-.

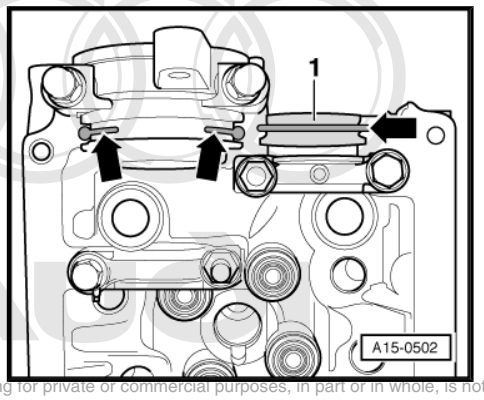

Protected by copyright. Copying for private or commercial purposes, in part or in whole, is not permitted unless authorised by AUDI AG. AUDI AG does not guarantee or accept any liability with respect to the correctness of information in this document. Copyright by AUDI AG.

– Apply a drop of sealant (∅ approx. 5 mm) to all sealing points at joints between cylinder head and bearing caps.
– Apply sealant bead (∅ approx. 3 mm) up to approx. half the height of the bearing caps -arrows-.
– Tighten nuts for cylinder head cover diagonally and in stages.
– Install intake manifold (front section) ⇒ page 97 .
– Install injector pipes one after the other (from bottom to top).
• Ensure stress-free installation of injector pipes.

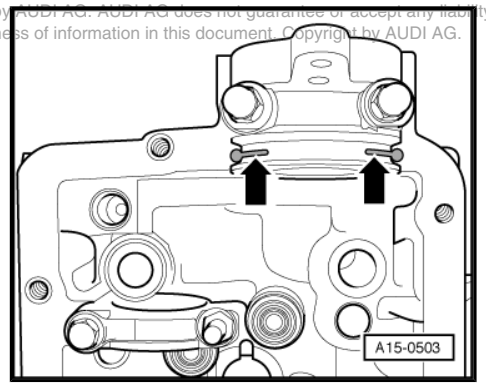

– Tighten with torque wrench -V.A.G 1331- , and tool insert AF 17 -V.A.G 1331/6- .

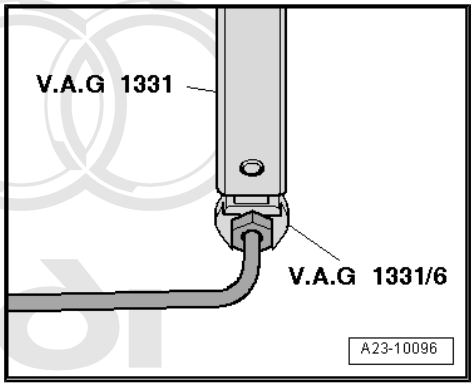

– Tighten with torque wrench -V.A.G 1331- , ratchet -V.A.G 1331/1- and socket -T40055- .

Copyright by AUDI AG. Copy for private or commercial purposes, in part or in whole, is not permitted unless authorised by AUDI AG. AUDI AG does not guarantee or accept any liability with respect to the correctness of information in this document. Copyright by AUDI AG.

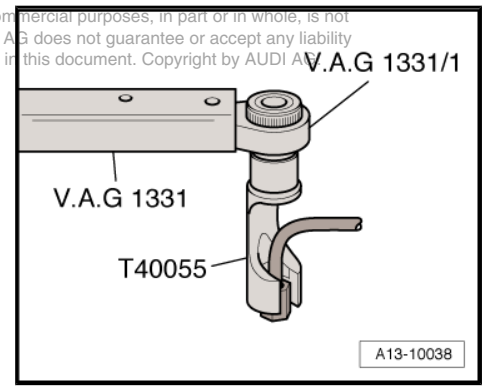

– Check fuel system for leaks ⇒ page 4 .

Tightening torques

Component		Nm
Cylinder head cover to cylinder head		10 [1)]
Guide tube for dipstick to cylinder head		10
Return pipes to injectors		5
Injector pipes to	Injectors	30
	Injection pump	30
• [1)]Tighten to 10 Nm after engine is warm.		

1.7 Removing cylinder head (left-side)

Special tools and workshop equipment required

♦ Ring spanner -3035-

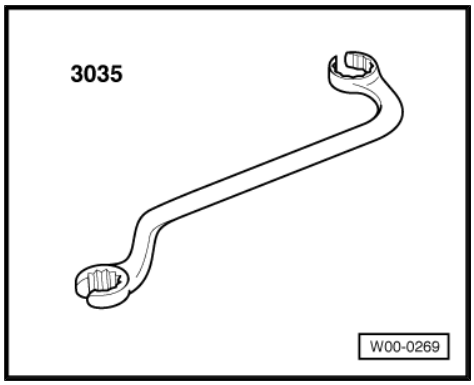

Procedure

• Engine in vehicle.

Note

Fit all cable ties in the original positions when installing.

Caution

To prevent damage to the electronic components when disconnecting the battery:

- *Observe notes on procedure for disconnecting the battery.*

– Disconnect earth cable at battery ⇒ Rep. Gr. 27 .

– Drain coolant ⇒ page 177 .

– Remove exhaust manifold (left-side) together with intermediate pipe: engine code letters AFN, AKN ⇒ page 247 , engine code letters AKE ⇒ page 250 .

– Take toothed belt off camshaft sprockets ⇒ page 53 .

Protected by copyright. Copying for private or commercial purposes, in part or in whole, is not permitted unless authorised by AUDI AG. AUDI AG does not guarantee or accept any liability with respect to the correctness of information in this document. Copyright by AUDI AG.

– Remove intake manifold (front section) ⇒ page 97 .

– Lift off centre section of rear toothed belt cover -2-.

– Unscrew bolts -arrows- and detach rear left toothed belt cover -3- and rear right toothed belt cover -1-.

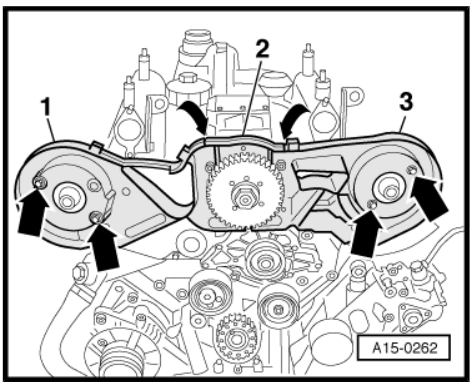

– Disconnect both coolant hoses -arrows-.

– Remove bolts -1 ... 3-.

– Pull off coolant pipe towards the front.

– Unplug electrical connectors on glow plugs.

– Move wiring clear.

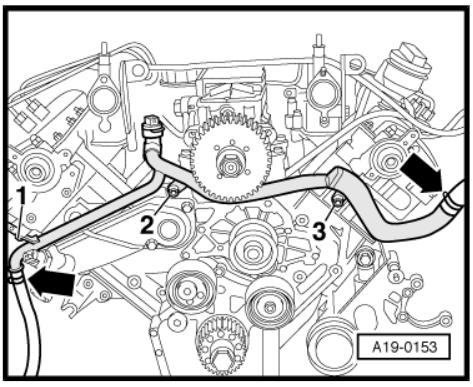

– Unbolt mechanical exhaust gas recirculation valve from left section of intake manifold -arrow-.

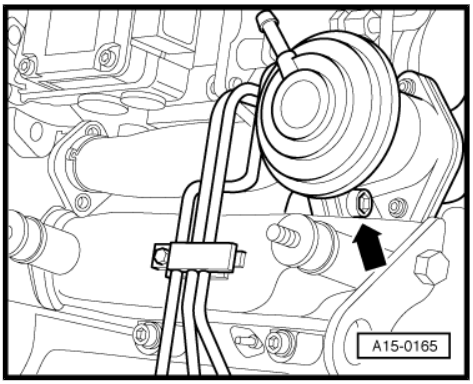

– Remove coolant hoses between engine and heat exchanger for heater -arrows-.

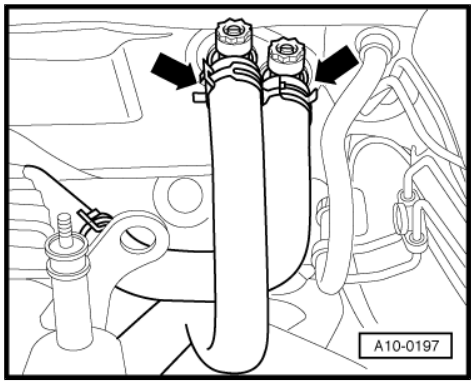

– Disconnect coolant hoses -1- and -2- at coolant pipe.
– Remove bolt -3-.

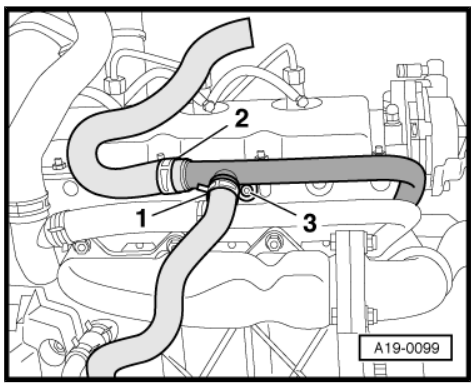

Note

Illustration shows coolant pipe with engine removed.

– Pull coolant pipe (left-side) out of cylinder block towards the rear.
– Mark injector pipes according to cylinder (e.g. with felt-tip pen).
– Disconnect injector pipes one by one with ring spanner -3035- .

– Disconnect return pipe from injectors -1-.
– Unscrew nuts -arrows- for cylinder head cover and detach cylinder head cover.

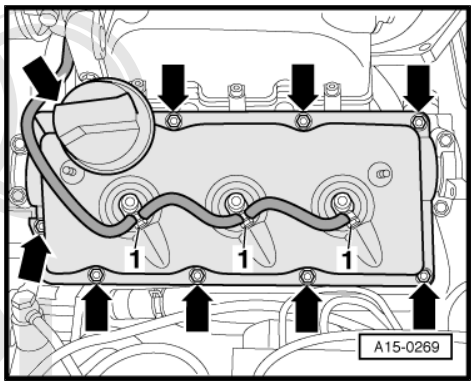

– Slacken cylinder head bolts in the sequence indicated and remove bolts.
– Take off cylinder head and place it on a soft surface (such as foam plastic).

Protected by copyright. Copying for private or commercial purposes, in part or in whole, is not permitted unless authorised by AUDI AG. AUDI AG does not guarantee or accept any liability with respect to the correctness of information in this document. Copyright by AUDI AG.

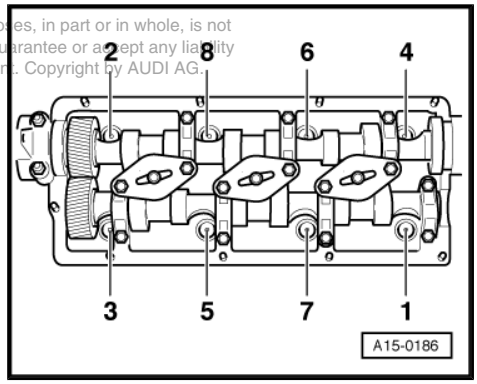

Caution

Risk of damage to injectors and glow plugs when putting down cylinder head.

- ***After removal, the cylinder head must not be put down on the gasket side with the injectors and the glow plugs still installed, because the glow plugs project slightly beyond the gasket surface.***

1.8 Removing cylinder head (right-side)

Special tools and workshop equipment required

♦ Ring spanner -3035-

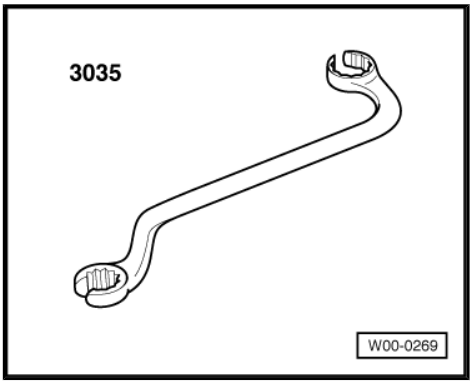

Removing

- Engine in vehicle.

Note

Fit all cable ties in the original positions when installing.

Caution

To prevent damage to the electronic components when disconnecting the battery:

♦ ***Observe notes on procedure for disconnecting the battery.***

– Disconnect earth cable at battery ⇒ Rep. Gr. 27 .
– Drain coolant ⇒ page 177 .
– Remove right exhaust manifold together with intermediate pipe ⇒ page 254 .
– Take toothed belt off camshaft sprockets ⇒ page 53 .
– Remove intake manifold (front section) ⇒ page 97 .
– Remove hose leading to turbocharger -arrows-.

Protected by copyright. Copying for private or commercial purposes, in part or in whole, is not permitted unless authorised by AUDI AG. AUDI AG does not guarantee or accept any liability with respect to the correctness of information in this document. Copyright by AUDI AG.

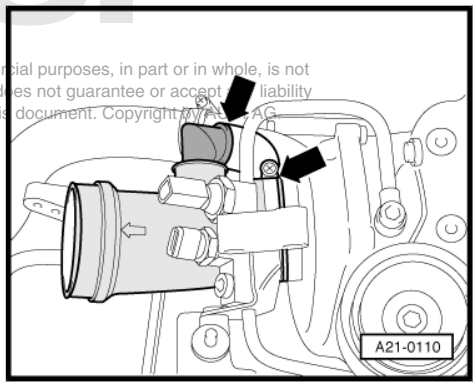

– Remove cover (right-side) in engine compartment -arrows-.
– Loosen bolts and move cover for air cleaner housing clear to one side.

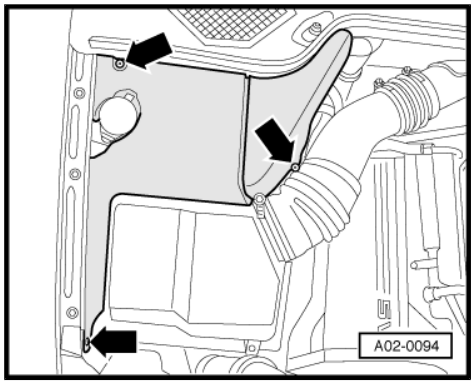

Note

Leave line and hose connected.

– Remove air cleaner (bottom section).

– Remove heat shield above turbocharger -arrows-.
– Mark injector pipes according to cylinder (e.g. with felt-tip pen).
– Disconnect injector pipes one by one with ring spanner -3035- .

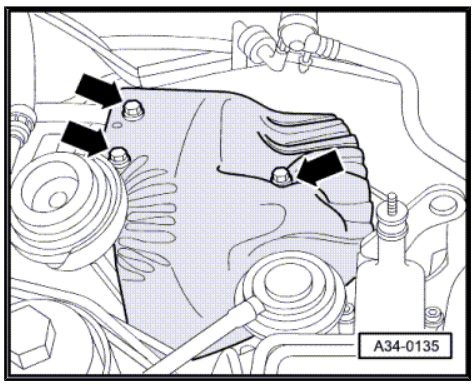

– Unplug electrical connectors -1 ... 3-.
– Unplug electrical connector -4- at injection pump.
– Unplug electrical connector -5- for coolant temperature sender.
– Unplug electrical connectors on glow plugs.

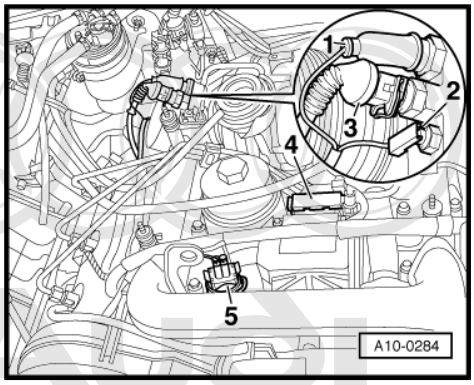

– Unplug electrical connector -1- at intake manifold pressure sender -G71- .
– Unplug electrical connector at valve for cut-off flap.
– Move wiring clear.
– Unfasten cable clamp at cylinder head cover (right-side) and move wiring harness clear to one side.
– Move fuel lines and oil line clear at air intake manifold (right-side).

Protected by copyright. Copying for private or commercial purposes, in part or in whole, is not permitted unless authorised by AUDI AG. AUDI AG does not guarantee or accept any liability with respect to the correctness of information in this document. Copyright by AUDI AG.

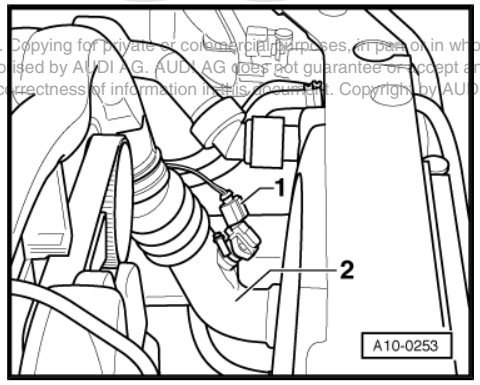

– Detach oil pipe -1- at turbocharger.
– Unscrew oil pipe at intake manifold -2-.

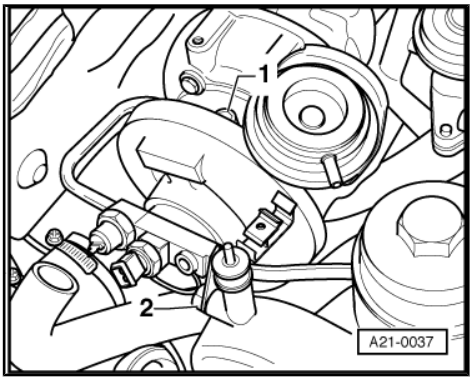

– Remove bolts -2- and -3-.
– Press coolant pipe -1- towards rear of vehicle and leave in position.

Copyright. Copying for private or commercial purposes, in part or in whole, is not permitted unless authorised by AUDI AG. AUDI AG does not guarantee or accept any liability with respect to the correctness of information in this document. Copyright by AUDI AG.

Note

Illustration shows coolant pipe with oil filter bracket removed.

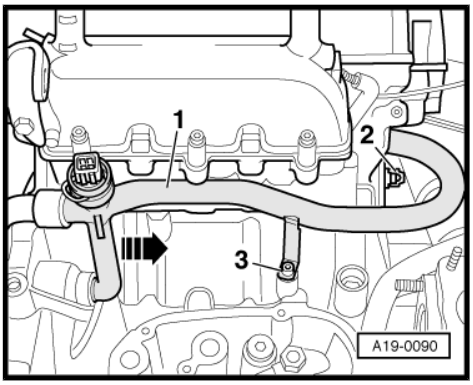

– Unbolt coolant pipe (right-side) from intermediate flange -1-. Leave hose -2- connected.

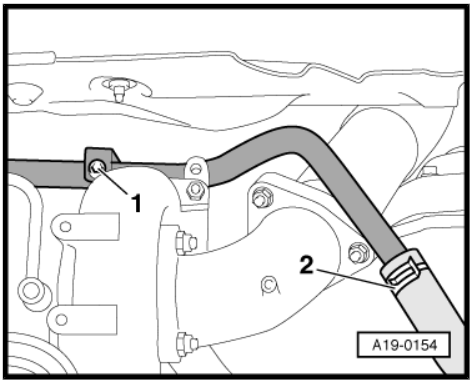

– Unbolt coolant pipe (right-side) from cylinder head -arrows-.
– Lift off centre section of rear toothed belt cover.

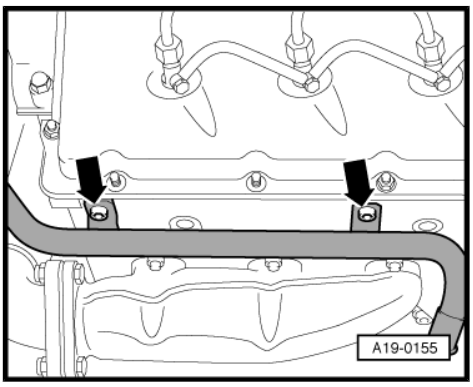

– Remove toothed belt cover (right-side) -arrows-.

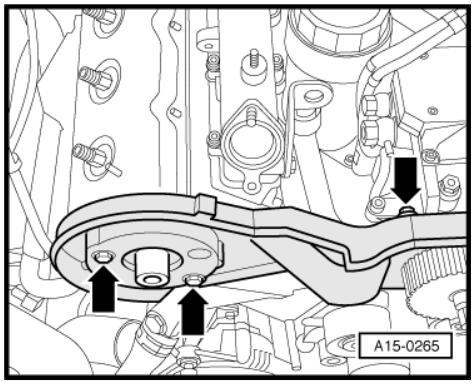

– Push out pin -1-, take out clip and remove electric fan.
– Move wiring for electric fan clear.
– Turn electric fan in direction of -arrow- and detach it.
– Move electric fan clear to one side.
– Remove bolts for alternator. Wiring can remain connected.
– Remove bracket for alternator.
– Unscrew guide tube for dipstick at cylinder head and lift off.

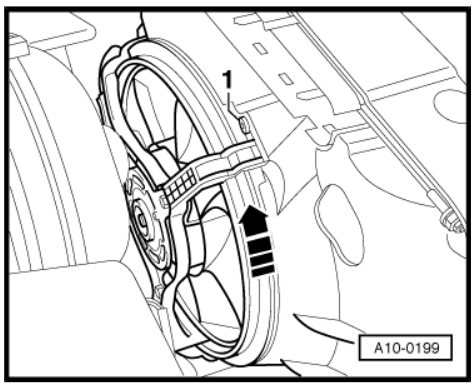

– Disconnect return pipe from injectors -1-.
– Unscrew nuts -arrows- for cylinder head cover and detach cylinder head cover.

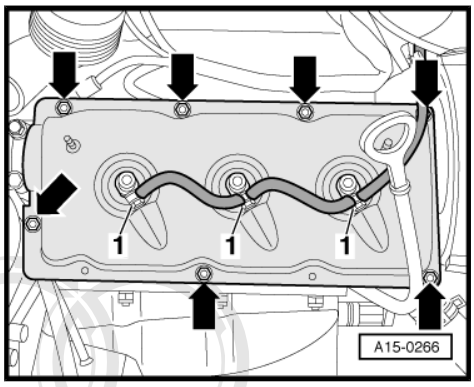

– Slacken cylinder head bolts in the sequence indicated and remove bolts.
– Take off cylinder head and place it on a soft surface (such as foam plastic).

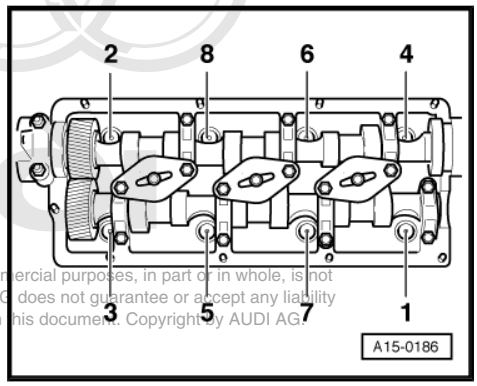

Caution

Risk of damage to injectors and glow plugs when putting down cylinder head.

- *After removal, the cylinder head must not be put down on the gasket side with the injectors and the glow plugs still installed, because the glow plugs project slightly beyond the gasket surface.*

Protected by copyright. Copying for private or commercial purposes, in part or in whole, is not permitted unless authorised by AUDI AG. AUDI AG does not guarantee or accept any liability with respect to the correctness of information in this document. Copyright by AUDI AG.

1.9 Installing cylinder head

Special tools and workshop equipment required

- Locking pin -3242-

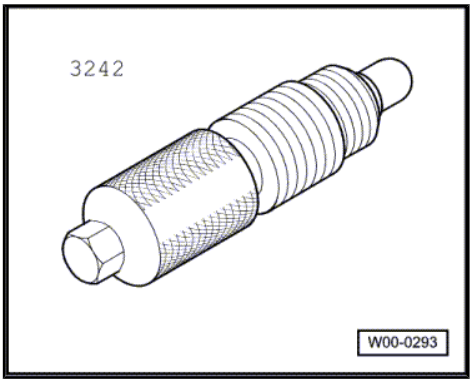

- Camshaft holder -3458-

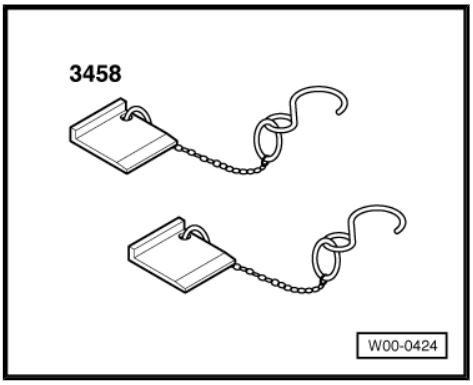

Procedure

Installation is carried out in the reverse order; note the following:

Protected by copyright. Copying for private or commercial purposes, in part or in whole, is not permitted unless authorised by AUDI AG. AUDI AG does not guarantee or accept any liability with respect to the correctness of information in this document. Copyright by AUDI AG.

Caution

Avoid damage to sealing surfaces.

- *Carefully remove sealant residue from cylinder head and cylinder block.*
- *Ensure that no long scores or scratches are made on the surfaces.*

Avoid damage to cylinder block.

- *No oil or coolant must be allowed to remain in the blind holes for the cylinder head bolts in the cylinder block.*

Risk of leaks at cylinder head gasket.

- *Carefully remove any sealant residue from the cylinder head and cylinder block. Ensure that no long scores or scratches are made on the surfaces.*
- *Carefully remove any remaining emery and abrasive material.*
- *Do not remove new cylinder head gasket from packaging until it is ready to be fitted.*
- *Handle the cylinder head gasket very carefully to prevent damage to the silicone coating or the indented area of the gasket.*

Avoid damage to open valves.

- *When installing an exchange cylinder head, the plastic protectors fitted to protect the open valves should not be removed until the cylinder head is ready to be fitted.*

Avoid damage to valves and piston crowns after working on valve gear.

- *Turn the engine carefully at least 2 rotations to ensure that none of the valves make contact when the starter is operated.*

Protected by copyright. Copying for private or commercial purposes, in part or in whole, is not permitted unless authorised by AUDI AG. AUDI AG does not guarantee or accept any liability with respect to the correctness of information in this document. Copyright by AUDI AG.

Note

- *Renew the bolts tightened with specified tightening angle.*
- *Renew self-locking nuts as well as seals, gaskets and O-rings.*
- *Cylinder heads must not be reworked on TDI engines.*
- *When installing an exchange cylinder head with camshafts fitted, the contact surfaces between the hydraulic compensation elements, roller rocker fingers and cams must be oiled.*
- *Hose connections and air pipes and hoses must be free of oil and grease before assembly.*
- *Secure all hose connections with the correct type of hose clips (same as original equipment) ⇒ Electronic parts catalogue .*
- *After fitting a new cylinder head or cylinder head gasket, change the engine oil and coolant.*

– Turn crankshaft and camshaft to “TDC” of cylinder 1 before fitting cylinder head.

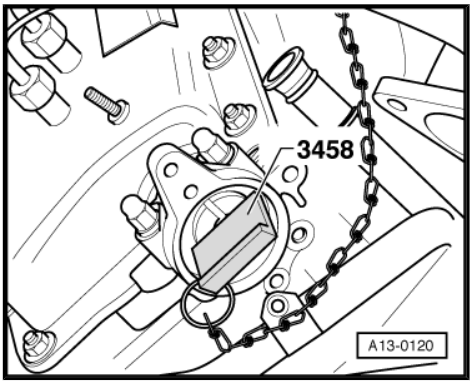

- It should be possible to insert camshaft holder -3458- into camshaft.
- Locking pin -3242- must be screwed in with crankshaft at TDC position.

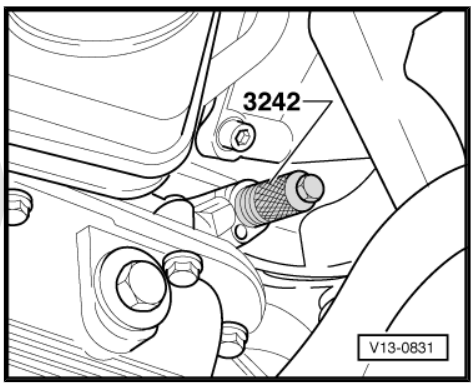

– Note identification markings on cylinder head gasket.

1 - Holes

2 - Part number

3 - Production code (can be disregarded)

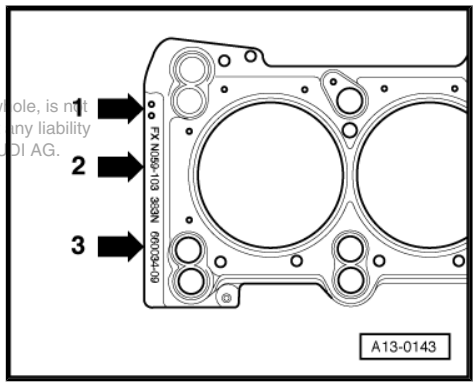

Protected by copyright. Copying for private or commercial purposes, in part or in whole, is not permitted unless authorised by AUDI AG. AUDI AG does not guarantee or accept any liability with respect to the correctness of information in this document. Copyright by AUDI AG.

Note

- *If the cylinder head gasket or cylinder head have been replaced, select the new cylinder head gasket according to the number of holes on the old gasket.*
- *If parts of the crankshaft drive have been renewed, the new cylinder head gasket must be selected by measuring the piston projection at TDC* *⇒ page 90* *.*

– Renew O-rings for coolant pipe before installing cylinder head.

– Place cylinder head gasket in position.

- Note position of centring pins in cylinder block.
- Note installation position of cylinder head gasket: the word “oben” (top) or the part number should face towards the cylinder head.

– Fit cylinder head.

– Tighten bolts in the sequence -1 ... 8- in 5 stages as follows:

1. Screw in by hand until they make contact.
2. Tighten to 35 Nm.
3. Tighten to 60 Nm.
4. Turn 90° further.
5. Turn 90° further.

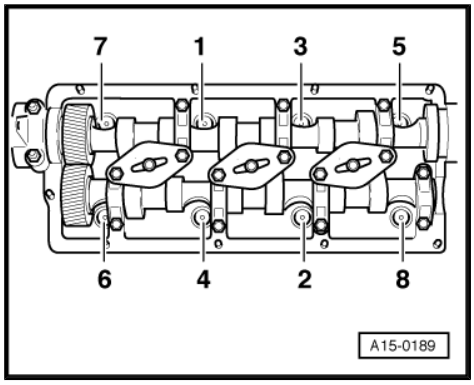

Note

Cylinder head bolts do not have to be torqued down again later after repair work.

Remaining installation steps are carried out in reverse sequence; note the following:

– Install cylinder head cover: left-side ⇒ page 102 ; right-side ⇒ page 104 .

– When installing cylinder head (right-side), renew O-ring at bottom of guide tube for dipstick.

– Install toothed belt (adjust valve timing) ⇒ page 58 .

– Install exhaust manifold:

♦ Left-side: engine code letters AFB, AKN ⇒ page 247

♦ Left-side: engine code letters AKE ⇒ page 250

♦ Right-side ⇒ page 254

– When installing cylinder head (left-side), align exhaust system so that it is free of stress ⇒ page 242 .

– Install alternator ⇒ Rep. Gr. 27 .

– Install poly V-belt ⇒ page 31 .

– Bleed fuel system ⇒ Rep. Gr. 20 .

– Change engine oil ⇒ Maintenance ; Booklet 403 .

Caution

Risk of irreparable damage to injection pump.

♦ ***Do not attempt to start the engine without first bleeding the fuel system!***

– Bleed fuel system ⇒ Rep. Gr. 20 .

– Observe notes on procedures required after connecting battery ⇒ Rep. Gr. 27 .

– Fill cooling system with fresh coolant ⇒ page 179 .

– Check fuel system for leaks ⇒ page 4 .

Protected by copyright. Copying for private or commercial purposes, in part or in whole, is not permitted unless authorised by AUDI AG. AUDI AG does not guarantee or accept any liability with respect to the correctness of information in this document. Copyright by AUDI AG.

Tightening torques

Component		Nm
Guide tube for dipstick to cylinder head		10
Toothed belt cover to	Cylinder head	10
	Injection pump	10
Coolant pipe to cylinder head/cylinder block	M6	10
	M8	22
Oil pipe to:	Turbocharger	15
	Intake manifold	22
Heat shield to turbocharger		10
Coolant pipe to intermediate flange		22
Mechanical exhaust gas recirculation valve to intake manifold		22
Bracket for alternator to cylinder block		22

1.10 Checking compression

Protected by copyright. Copying for private or commercial purposes, in part or in whole, is not permitted unless authorised by AUDI AG. AUDI AG does not guarantee or accept any liability with respect to the correctness of information in this document. Copyright by AUDI AG.

Special tools and workshop equipment required

- U/J extension and socket, 10 mm -3220-

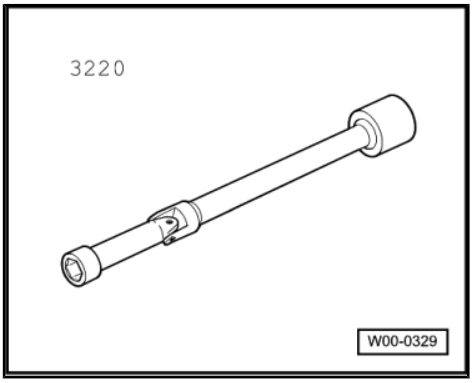

- Compression tester -V.A.G 1763- with adapter -V.A.G 1763/5-

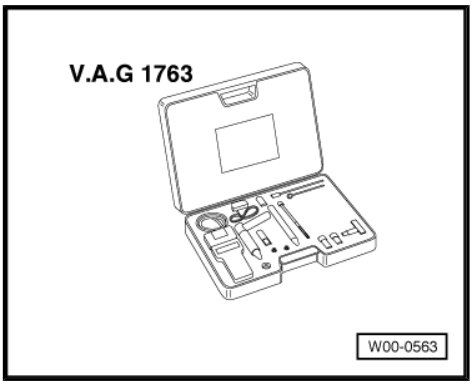

Test conditions

- Engine oil temperature min. 30 °C.
- Battery voltage at least 12.5 V

Test sequence

– Detach caps on engine cover panel.
– Unbolt and remove engine cover panel -arrows-.

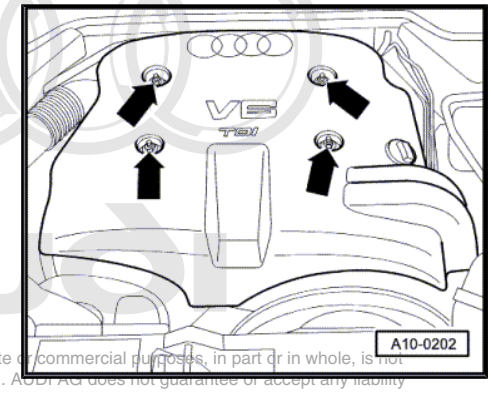

Protected by copyright. Copying for private or commercial purposes, in part or in whole, is not permitted unless authorised by AUDI AG. AUDI AG does not guarantee or accept any liability with respect to the correctness of information in this document. Copyright by AUDI AG.

– Remove air hose from air cleaner -arrows-.

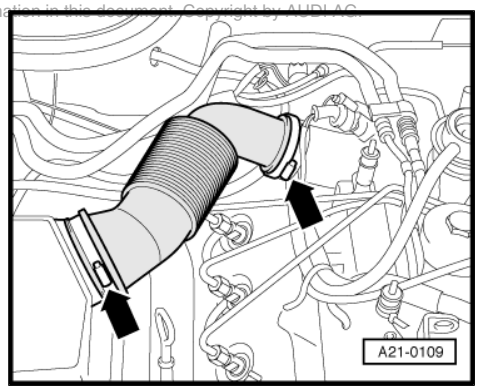

– Remove hose leading to turbocharger -arrows-.
– Unplug electrical connector at injection pump.
– Remove all glow plugs ⇒ Rep. Gr. 28 .

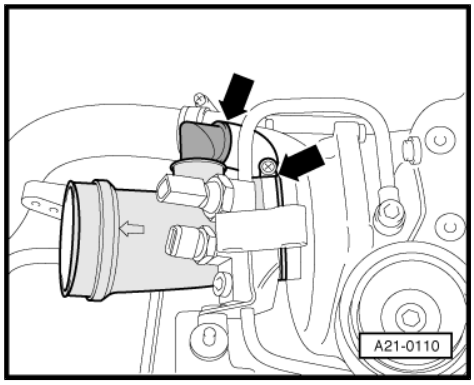

– Screw in adapter -V.A.G 1763/5- in place of the glow plug in each cylinder.

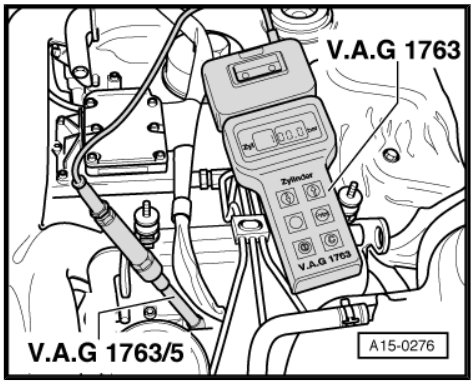

Note

Using the compression tester ⇒ operating instructions .

– Have a 2nd mechanic operate starter until tester shows no further pressure increase.

Compression pressure	bar
When new	27 … 33
Wear limit	24
Maximum difference between cylinders	5

Assembling

Installation is carried out in the reverse order; note the following:

– Install glow plugs ⇒ Rep. Gr. 28 .
– Faults are stored in engine control unit because electrical connectors were unplugged and the engine was started: “Interrogate fault memory” in “Vehicle self-diagnosis” ⇒ Vehicle diagnosis, testing and information system VAS 5051.

Reproduction or copying for other commercial purposes, in part or in whole, is not permitted unless authorised by AUDI AG. AUDI AG does not guarantee or accept any liability

2 Valve gear

Caution

Avoid damage to valves and piston crowns after working on valve gear.

- *The hydraulic tappets have to settle; wait for approx. 30 minutes after installing camshafts before starting engine.*
- *Turn the engine carefully at least 2 rotations to ensure that none of the valves make contact when the starter is operated.*

2.1 Valve gear - exploded view

Note

The diagram shows the cylinder head on cylinder bank 2 (left-side).

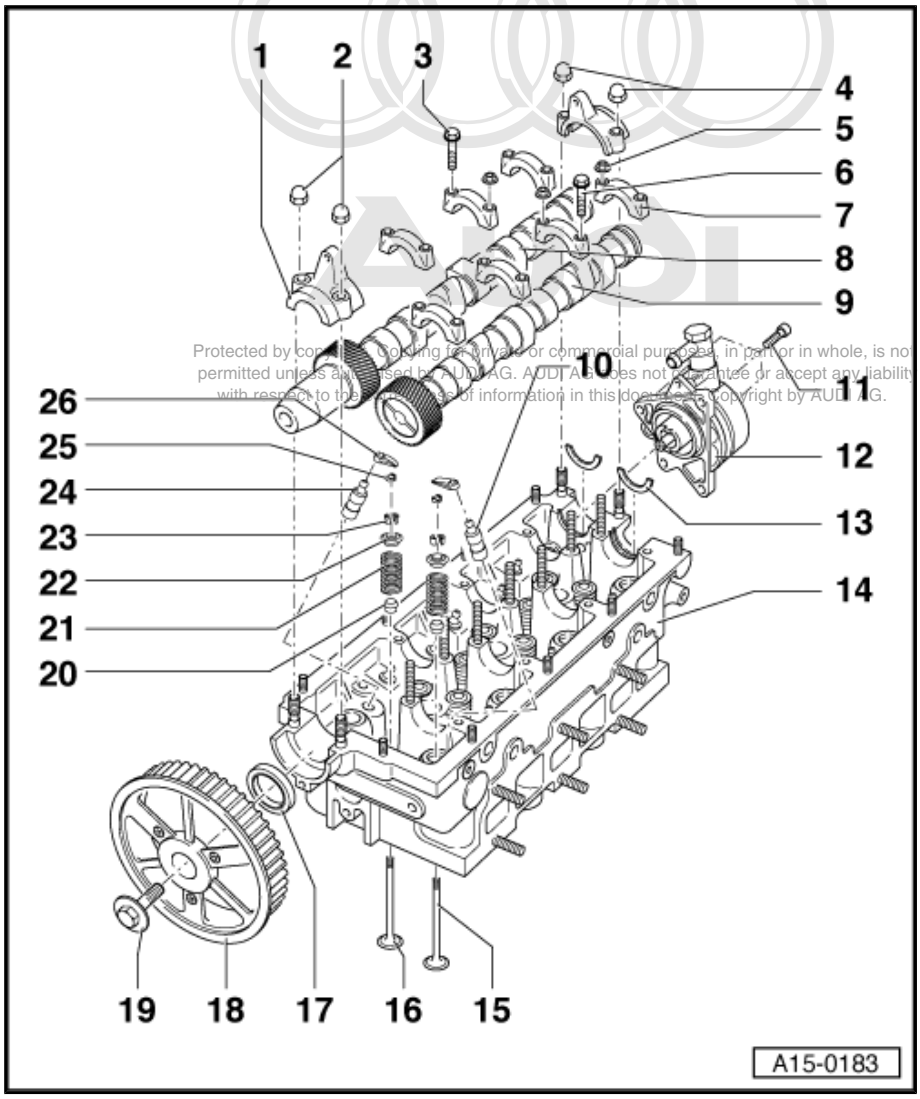

1 - Bearing cap
- For inlet camshaft
- Before fitting, apply sealant to sealing surfaces of outer bearing caps ⇒ page 130
- Installation position and installation sequence ⇒ page 126

2 - Cap nut
- 15 Nm

3 - Bolt
- 10 Nm

4 - Cap nut
- 15 Nm

5 - Nut
- 10 Nm

6 - Bolt
- 10 Nm

7 - Bearing cap
- For exhaust camshaft
- Installation position and installation sequence ⇒ page 126

8 - Inlet camshaft
- Removing and installing ⇒ page 126
- Measuring axial clearance ⇒ page 124
- Measuring radial clearance ⇒ page 125
- Runout: max. 0.04 mm

9 - Exhaust camshaft

- ❑ Removing and installing ⇒ page 126
- ❑ Measuring axial clearance ⇒ page 124
- ❑ Measuring radial clearance ⇒ page 125
- ❑ Runout: max. 0.04 mm

10 - Hydraulic valve compensation element

- ❑ Mark installation position with a coloured pen
- ❑ Checking ⇒ page 131
- ❑ Lubricate contact surface before fitting

11 - Bolt

- ❑ 10 Nm

12 - Exhauster pump

- ❑ For brake servo
- ❑ Removing and installing ⇒ “1.11 Removing toothed belt from camshaft sprockets”, page 53
- ❑ Renew O-rings

13 - Thrust washers

- ❑ 2x

14 - Cylinder head

- ❑ Removing: left-side ⇒ page 108 ; right-side ⇒ page 110
- ❑ Installing ⇒ page 114
- ❑ Valve seats are not to be re-worked

15 - Exhaust valve

- ❑ Checking ⇒ page 140
- ❑ Valve dimensions ⇒ page 139
- ❑ Checking valve guides ⇒ page 139

16 - Inlet valve

- ❑ Checking ⇒ page 140
- ❑ Valve dimensions ⇒ page 139
- ❑ Checking valve guides ⇒ page 139

17 - Oil seal

- ❑ Renewing ⇒ page 125

18 - Camshaft sprocket

19 - Bolt

- ❑ Use counter-hold tool -3036- when loosening and tightening
- ❑ 75 Nm

20 - Valve stem oil seal

- ❑ Renewing: with cylinder head installed ⇒ page 133 , with cylinder head removed ⇒ page 136

21 - Valve spring

22 - Valve spring plate

23 - Valve cotters

24 - Hydraulic valve compensation element

- ❑ Mark installation position with a coloured pen
- ❑ Checking ⇒ page 131
- ❑ Lubricate contact surface before fitting

Protected by copyright. Copying for private or commercial purposes, in part or in whole, is not permitted unless authorised by AUDI AG. AUDI AG does not guarantee or accept any liability with respect to the correctness of information in this document. Copyright by AUDI AG.

25 - Guide for rocker finger

26 - Rocker finger

❑ Mark installation position with a coloured pen

2.2 Checking axial clearance of camshafts

Special tools and workshop equipment required

♦ Universal dial gauge bracket -VW 387-

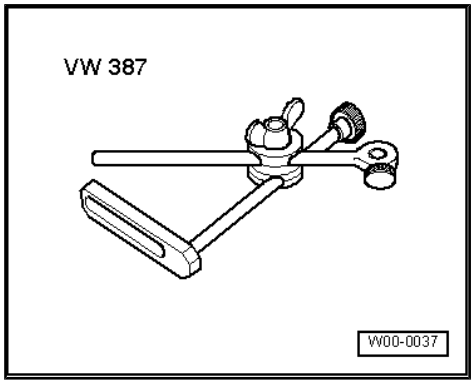

♦ Dial gauge -VAS 6079-

Protected by copyright. Copying for private or commercial purposes, in part or in whole, is not permitted unless authorised by AUDI AG. AUDI AG does not guarantee or accept any liability with respect to the correctness of information in this document. Copyright by AUDI AG.

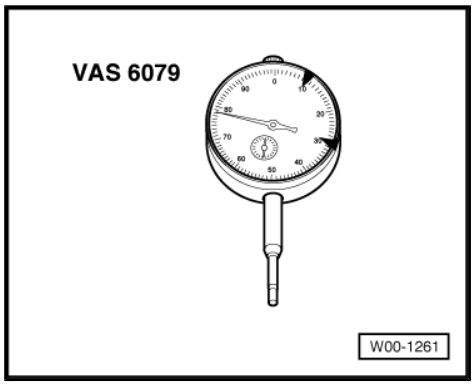

Test sequence

– Perform measurement with rocker fingers removed and with front and rear bearing caps installed -vertical arrows-.

– Secure dial gauge -VAS 6079- to cylinder head with universal dial gauge bracket -VW 387- as shown in the following illustrations.

– Measure axial clearance of inlet camshaft -horizontal arrows-.

• New: 0.06 ... 0.15 mm

• Wear limit: 0.30 mm

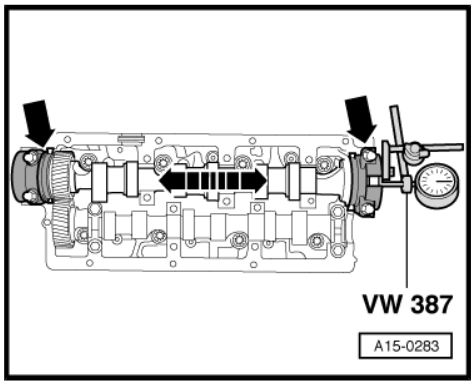

– Measure axial clearance of exhaust camshaft -horizontal arrows-.

- New: 0.06 ... 0.15 mm
- Wear limit: 0.30 mm

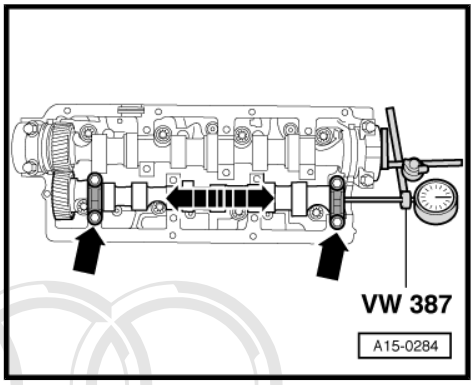

2.3 Measuring radial clearance of camshafts

Special tools and workshop equipment required

♦ Plastigage

Procedure

– Remove rocker fingers
⇒ "2.5 Removing and installing camshafts", page 126 .

Protected by copyright. Copying for private or commercial purposes, in part or in whole, is not permitted unless authorised by AUDI AG. AUDI AG does not guarantee or accept any liability with respect to the correctness of information in this document. Copyright by AUDI AG.

– Clean bearing and bearing journal.

– Place a length of Plastigage corresponding to the width of the bearing on the bearing journal or bearing shell to be measured.

- The Plastigage must be positioned in the centre of the bearing.

– Re-insert camshafts, fit bearing caps and tighten
⇒ "2.5 Removing and installing camshafts", page 126 without rotating camshafts.

– Remove retaining frame and camshafts again.

– Compare width of Plastigage with measurement scale.

Radial clearance:

- New: 0.035 ... 0.085 mm.
- Wear limit: 0.100 mm.

2.4 Renewing oil seals for camshafts

Special tools and workshop equipment required

♦ Oil seal extractor -2085-

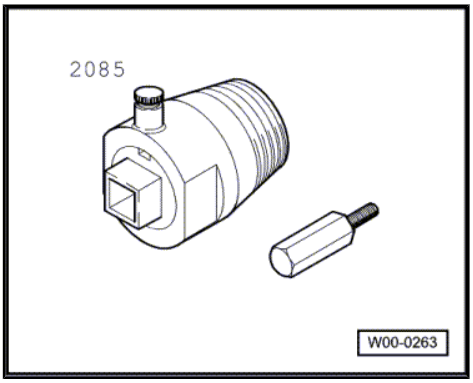

♦ Fitting sleeves -3241-

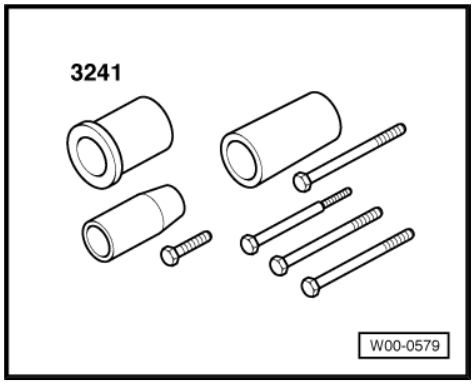

Procedure

Note

If there are leaks at an oil seal, renew the oil seals on both cylinder heads.

– Take toothed belt off camshaft sprockets ⇒ page 53 .

– Adjust inner section of oil seal extractor -2085- so it is flush with the outer section and lock in position with knurled screw.

– Lubricate threaded head of oil seal extractor, place it in position and exerting firm pressure screw it into oil seal as far as possible.

– Loosen knurled screw and turn inner section against camshaft until oil seal is pulled out.

– Clamp flats of oil seal extractor in vice. Remove oil seal with pliers.

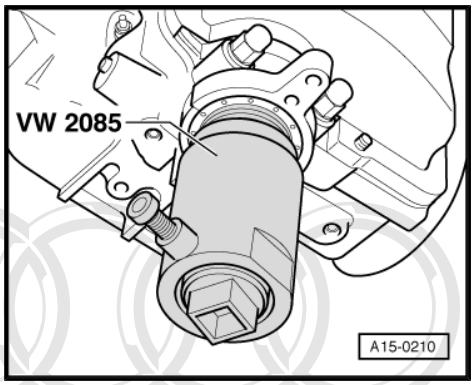

– Clean contact surface and sealing surface.

– Do not lubricate sealing lip of oil seal.

– Slide oil seal over taper on camshaft.

– Insert 3 washers between bolt -3241/7- and fitting sleeve -3241/1- .

– Press in oil seal until it is flush using fitting sleeve -3241/1- and bolt -3241/7- .

– Place toothed belt on camshaft sprockets ⇒ page 58 .

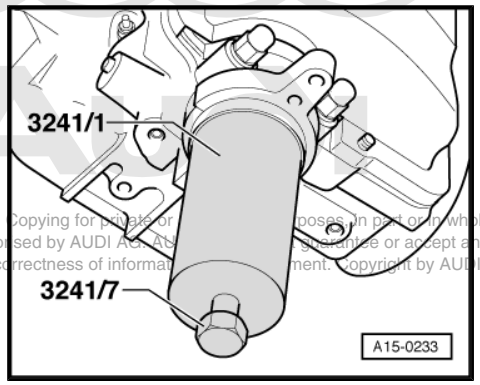

Protected by copyright. Copying for private or commercial purposes, in part or in whole, is not permitted unless authorised by AUDI AG. AUDI AG does not guarantee or accept any liability with respect to the correctness of information in this document. Copyright by AUDI AG.

2.5 Removing and installing camshafts

Special tools and workshop equipment required

♦ Sealant ⇒ Electronic parts catalogue

Removing

– Take toothed belt off camshaft sprockets ⇒ page 53 .

– Remove cylinder head cover: left-side ⇒ page 102 , right-side ⇒ page 104 .

– Lift off centre section of rear toothed belt cover -2-.
– Unscrew bolts -arrows- and detach rear left toothed belt cover -3- or rear right toothed belt cover -1-.

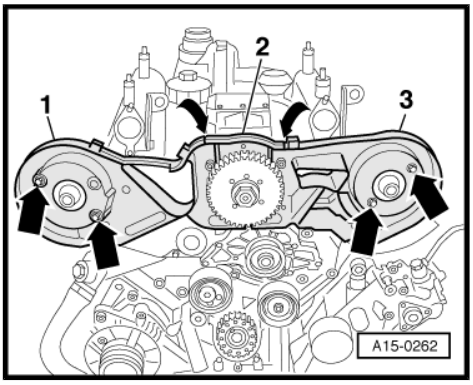

– Remove retainers of injectors on relevant side -arrows- and pull out injectors upwards.
– Use waterproof felt-tip pen to mark installation position of rocker fingers.
– Unscrew camshaft bearing caps in stages and in diagonal sequence.
– Remove camshafts.

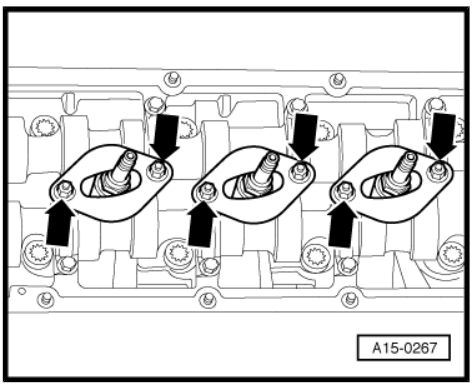

Note

Pay attention to rocker fingers and guides when detaching camshafts.

Installing

- Crankshaft locked in position with locking pin -3242- .
– Unscrew stud -arrow- in front of securing slot in exhaust camshaft.
– Insert thrust washers.
– Insert rocker finger guides and rocker fingers (note marking).

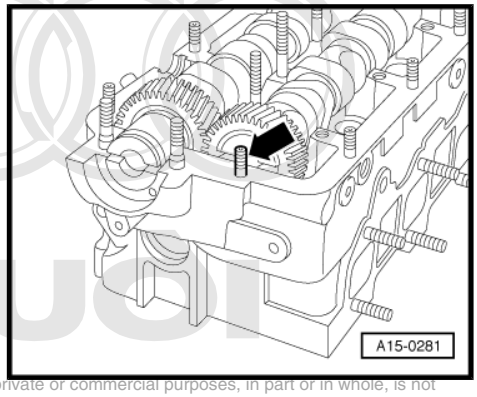

Note

♦ *Pay attention to correct positioning of rocker finger guides.*
♦ *Apply a small quantity of grease to facilitate installation of rocker fingers and rocker finger guides (if necessary).*

Protected by copyright. Copying for private or commercial purposes, in part or in whole, is not permitted unless authorised by AUDI AG. AUDI AG does not guarantee or accept any liability with respect to the correctness of information in this document. Copyright by AUDI AG.

– Install inlet camshaft so that the camshaft holder -3458- can be inserted.

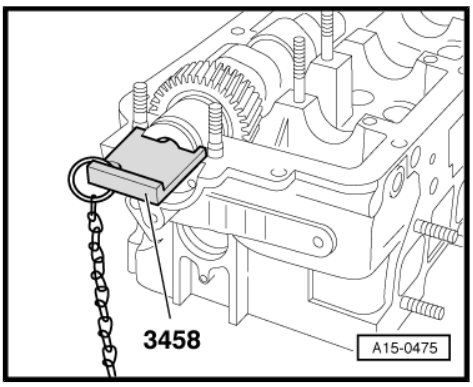

– Ensure correct positioning. Before installing camshaft, fit bearing caps and determine correct position for installation.

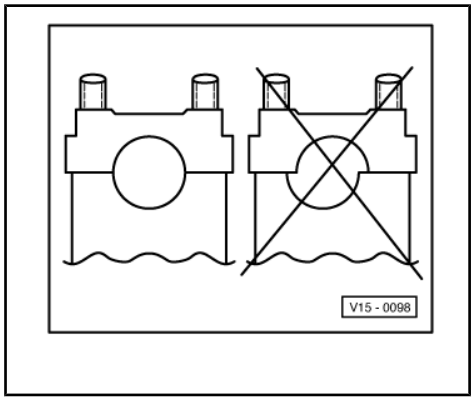

– Tighten bearing caps -1- and -5-.

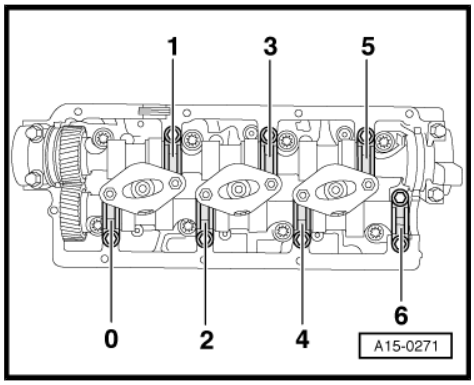

Note

- *Note numbering on bearing caps.*
- *Shown on cylinder head (right-side) in illustration.*

– Install exhaust camshaft so that the camshaft holder -3458- can be inserted.

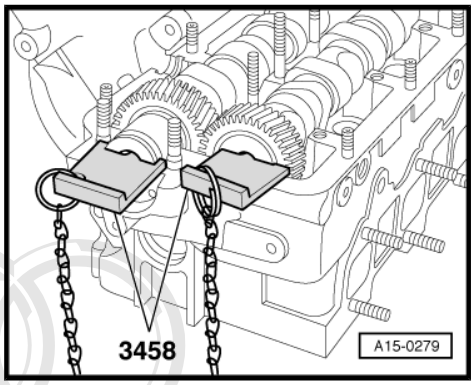

– Tighten bearing caps -0- and -4-.
– Re-check setting with camshaft holder -3458- .
– Check installation position of rocker fingers and guides.

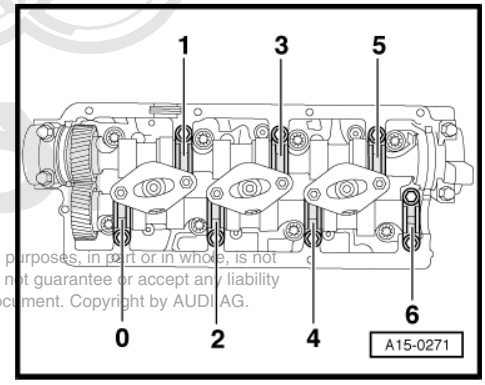

Protected by copyright. Copying for private or commercial purposes, in part or in whole, is not permitted unless authorised by AUDI AG. AUDI AG does not guarantee or accept any liability with respect to the correctness of information in this document. Copyright by AUDI AG.

- Remove old sealant completely from cylinder head and bearing cap.
- Clean contact surfaces between cylinder head and bearing cap; they must be free of oil and grease.
- Apply a small quantity of sealant to -hatched areas- of outer bearing cap at front left/rear right.

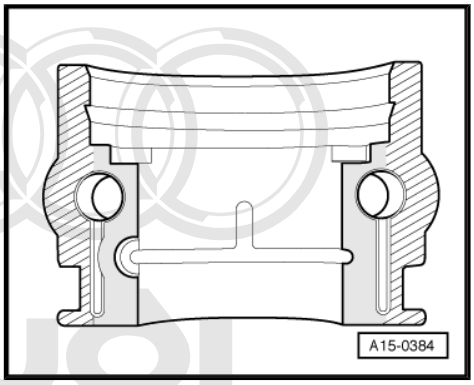

Protected by copyright. Copying for private or commercial purposes, in part or in whole, is not permitted unless authorised by AUDI AG. AUDI AG does not guarantee or accept any liability with respect to the correctness of information in this document. Copyright by AUDI AG.

– Apply a small quantity of sealant to -hatched areas- of outer bearing cap at rear left/front right.

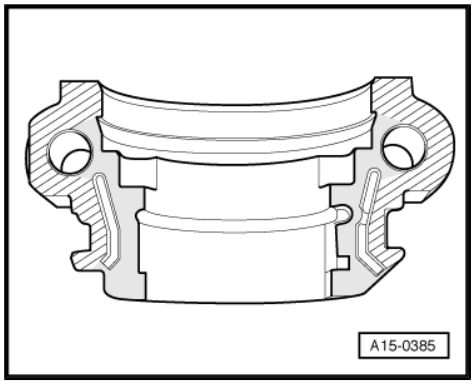

Note

Sealant must not be allowed to come into contact with -grey-shaded areas- shown in illustration.

– Fit outer bearing caps.

– Torque down remaining bearing caps.

– Fit stud.

Note

Always renew copper seal and O-ring between cylinder head and injectors.

– Make sure injectors are properly positioned.

– Fit retainer.

Remaining installation steps are carried out in reverse sequence; note the following:

– Place toothed belt on camshaft sprockets ⇒ page 58 .

– Install cylinder head cover: left-side ⇒ page 102 ; right-side ⇒ page 104 .

Caution

Avoid damage to valves and piston crowns after working on valve gear.

- ***The hydraulic tappets have to settle; wait for approx. 30 minutes after installing camshafts before starting engine.***
- ***Turn the engine carefully at least 2 rotations to ensure that none of the valves make contact when the starter is operated.***

Tightening torques

Component		Nm
Bearing cap to cylinder head	Cap nut	15
	Nut	10
	Bolt	10
Stud in cylinder head		5
Injectors in cylinder head		10

2.6 Removing and installing outer camshaft bearing caps

Special tools and workshop equipment required

- Sealant ⇒ Electronic parts catalogue

Protected by copyright. Copying for private or commercial purposes, in part or in whole, is not permitted unless authorised by AUDI AG. AUDI AG does not guarantee or accept any liability with respect to the correctness of information in this document. Copyright by AUDI AG.

Note

In the event of leakage in the area of the outer camshaft bearing caps, caps are to be removed and sealant applied.

Removing

- Remove cylinder head cover: left-side ⇒ page 102 ; right-side ⇒ page 104 .
- Unscrew outer bearing caps.

Installing

- Remove any traces of remaining sealant from cylinder head and camshaft bearing caps.
- Clean contact surfaces between cylinder head and bearing caps; surfaces must be free from oil and grease.
- Apply a small quantity of sealant to -hatched areas- of outer bearing cap at front left/rear right.

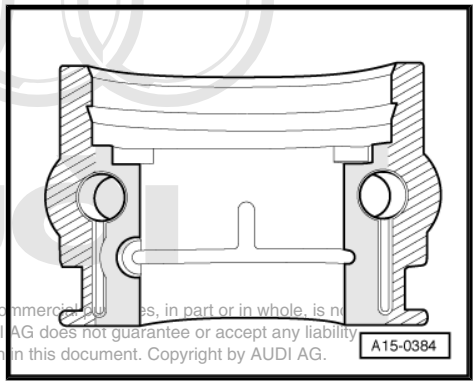

Protected by copyright. Copying for private or commercial purposes, in part or in whole, is not permitted unless authorised by AUDI AG. AUDI AG does not guarantee or accept any liability with respect to the correctness of information in this document. Copyright by AUDI AG.

- Apply a small quantity of sealant to -hatched areas- of outer bearing cap at rear left/front right.

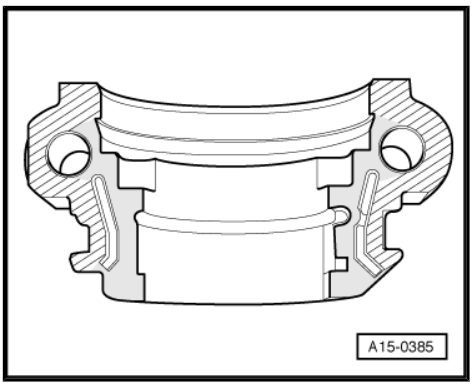

Note

Sealant must not be allowed to come into contact with -grey-shaded areas- shown in illustration.

- Fit outer bearing caps.
- Install cylinder head cover: left-side ⇒ page 102 ; right-side ⇒ page 104 .

Tightening torques

Component		Nm
Bearing cap to cylinder head	Cap nut	15
	Nut	10
	Bolt	10

2.7 Checking hydraulic valve compensation elements

Note

- *Hydraulic valve compensation elements cannot be serviced.*
- *Irregular valve noises when starting engine are normal.*

Special tools and workshop equipment required

- Feeler gauge
- Wooden/plastic wedge

Procedure

– Start engine and run until coolant temperature reaches approx. 80 °C.

– Increase engine speed to approx. 2500 rpm for 2 minutes (perform road test if necessary).

Note

♦ *If the irregular valve noises stop but recur repeatedly during short trips, renew the oil retention valve.*

♦ *The oil retention valve is located below the oil filter bracket* ⇒ page 171 .

If the hydraulic valve compensation elements are still noisy, locate the defective element as follows:

– Remove cylinder head cover: left-side ⇒ page 102 ; right-side ⇒ page 104 .

– Rotate crankshaft until cam of hydraulic compensation element to be checked faces upwards. The procedure is:

♦ Vehicles with manual gearbox: push vehicle forwards with 4th gear engaged and ignition switched off.

♦ Vehicles with automatic gearbox: rotate crankshaft in clockwise direction via central bolt for vibration damper.

– Determine play between cam and rocker finger.

– Press rocker finger down -arrow- using a screwdriver.

– If it is possible to insert a feeler gauge of 0.20 mm between cam and roller rocker finger, renew compensation element ⇒ “2.5 Removing and installing camshafts”, page 126 .

– Install cylinder head cover: left-side ⇒ page 102 ; right-side ⇒ page 104 .

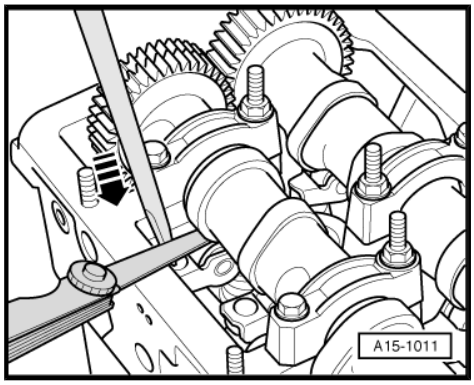

Protected by copyright. Copying for private or commercial purposes, in part or in whole, is not permitted unless authorised by AUDI AG. AUDI AG does not guarantee or accept any liability with respect to the correctness of information in this document. Copyright by AUDI AG.

2.8 Renewing valve stem oil seals with cylinder head installed

Special tools and workshop equipment required

- U/J extension and socket, 10 mm -3220-
- Valve stem seal puller -3364-
- Valve stem seal fitting tool -3365-
- Removal and installation device for valve cotters - VAS 5161-

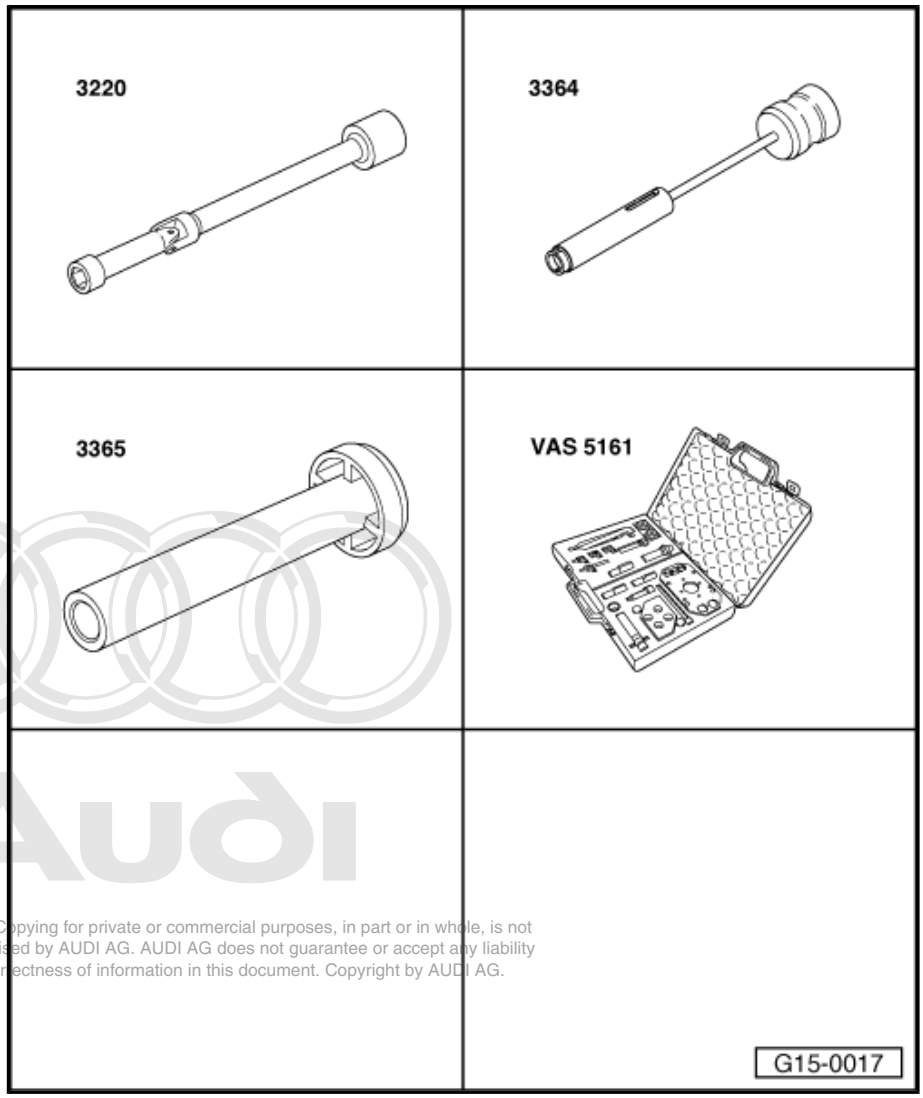

Protected by copyright. Copying for private or commercial purposes, in part or in whole, is not permitted unless authorised by AUDI AG. AUDI AG does not guarantee or accept any liability with respect to the correctness of information in this document. Copyright by AUDI AG.

Procedure

– Remove camshafts ⇒ page 126 .

– Remove all glow plugs ⇒ Rep. Gr. 28 .

– Mark original positions of rocker fingers and hydraulic compensation elements for reinstallation.

– Remove rocker fingers together with hydraulic compensation elements and put down on a clean surface.

– Set piston of appropriate cylinder to “bottom dead centre”.

– Fit guide plate -VAS 5161/9- onto cylinder head.
– Secure guide plate with knurled screws -VAS 5161/12- .
– Apply drift -VAS 5161/3- to guide plate and use plastic-headed hammer to release sticking valve cotters.

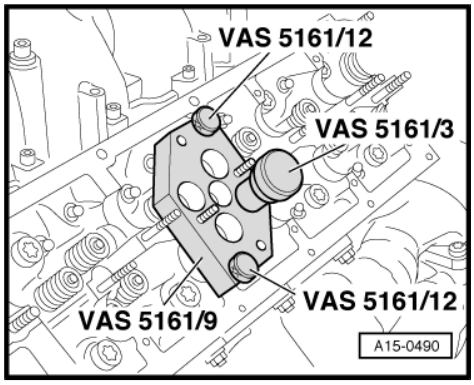

– Screw sealing pin -VAS 5161/10- into guide plate.
– Screw adapter -VAS 5161/11- hand-tight into corresponding glow plug thread.

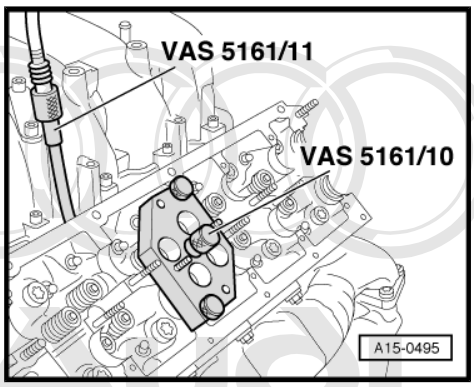

– Screw snap-in device -VAS 5161/6- with engaging fork -VAS 5161/5- into guide plate.
– Slide knurled spacer ring -VAS 5161/17- onto assembly cartridge -VAS 5161/8- .
– Connect adapter to compressed air line using a commercially available connection piece, and apply constant air pressure.
• Air pressure: at least 6 bar
– Attach pressure fork -VAS 5161/2- to snap-in device and push assembly cartridge down.
– At the same time, turn knurled screw of assembly cartridge clockwise until tips engage in valve cotters.
– Move knurled screw back and forth slightly; the valve cotters are thus forced apart and taken up by the assembly cartridge.
– Detach valve spring with valve spring plate.

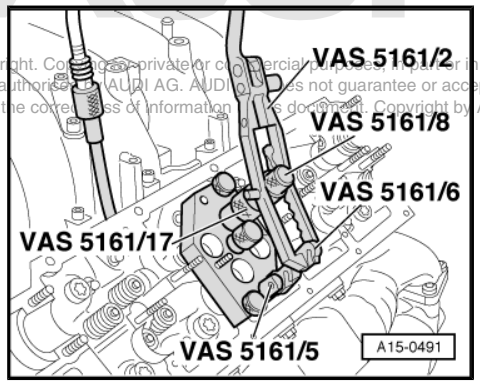

Protected by copyright. Copying for private or commercial purposes, in part or in whole, is not permitted unless authorised by AUDI AG. AUDI AG does not guarantee or accept any liability with respect to the correctness of information in this document. Copyright by AUDI AG.

– Pull off valve stem oil seal with valve stem seal puller -3364- .

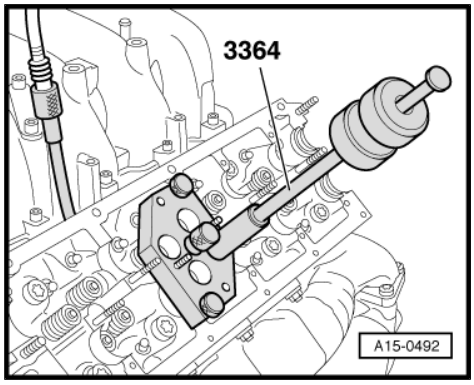

If the puller cannot be used on some of the valve stem oil seals due to the confined space, proceed as follows:

– Knock out pin -arrow- of puller using a drift and remove impact extractor attachment.

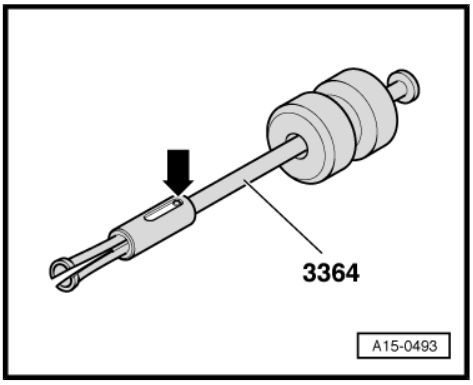

– Apply bottom section of puller -3364- to valve stem oil seal.
– Secure puller with a punch -1- or other suitable tool as shown in the illustration.
– Apply assembly lever to puller and pull out valve stem oil seal -arrow-.

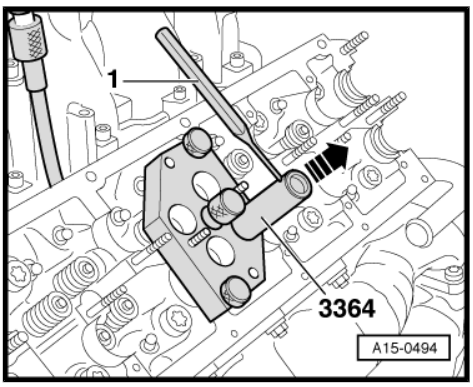

Caution

Make sure valve stem oil seals are not damaged when installing.

- *New valve stem oil seals -B- are supplied with plastic sleeve; fit plastic sleeve -A- onto valve stem.*

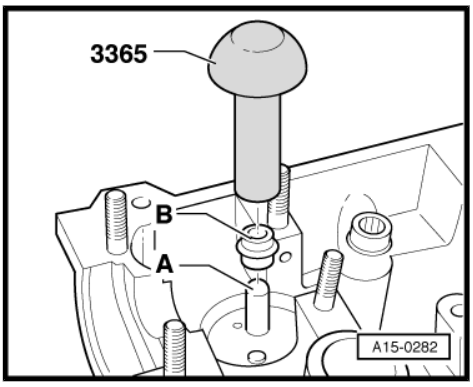

– Lightly oil sealing lip of valve stem oil seal.
– Slide valve stem oil seal onto plastic sleeve.
– Carefully press valve stem oil seal onto valve guide using valve stem seal fitting tool -3365- .
– Take off plastic sleeve.

If valve cotters had been removed from assembly cartridge they must first be inserted in insertion device -VAS 5161/18- .

- Larger diameter of valve cotters faces upwards.

– Press assembly cartridge onto insertion device from above and take up valve cotters.

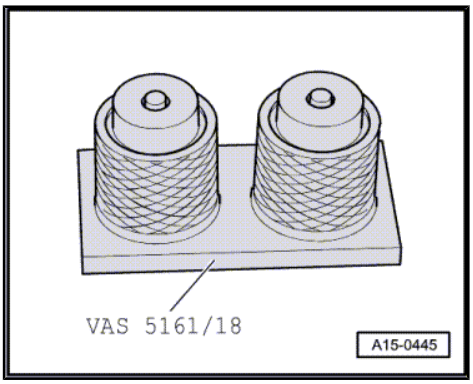

Protected by copyright. Copying for private or commercial purposes, in part or in whole, is not permitted unless authorised by AUDI AG. AUDI AG does not guarantee or accept any liability with respect to the correctness of information in this document. Copyright by AUDI AG.

– Insert assembly cartridge in guide plate -VAS 5161/9- again.
– Press down pressure fork and pull knurled screw upwards while turning screw in both directions - this will insert the valve cotters.
– Release the pressure fork with knurled screw still in pulled position.
– Repeat procedure for each valve.

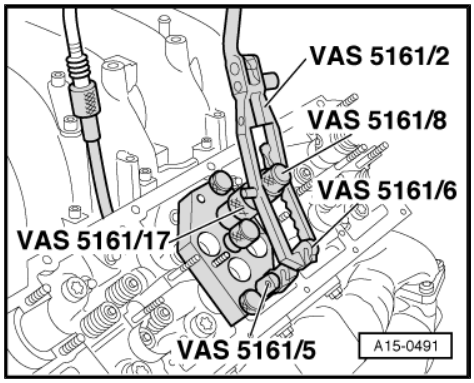

Assembling

Installation is carried out in the reverse order; note the following:

– Install camshafts ⇒ page 126 .
– Install glow plugs ⇒ Rep. Gr. 28 .

2.9 Renewing valve stem oil seals with cylinder head removed

Special tools and workshop equipment required

♦ Valve stem seal puller -3364-

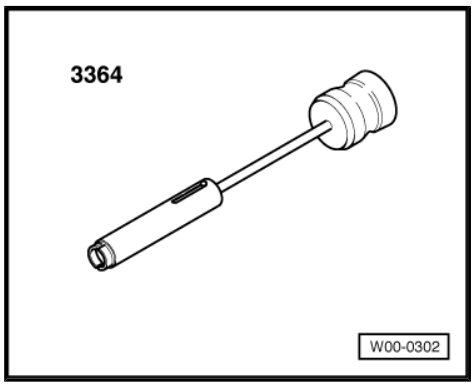

♦ Valve stem seal fitting tool -3365-

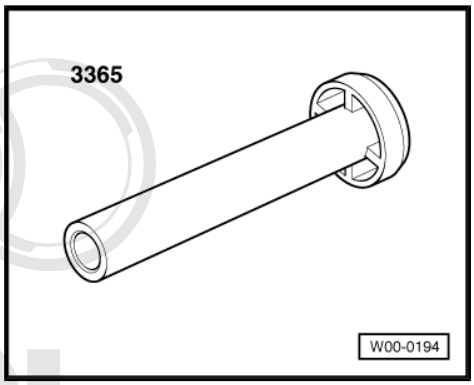

♦ Removal and installation device for valve cotters -VAS 5161- with knurled spacer ring -VAS 5161/23-1- and guide plate - VAS 5161/23-

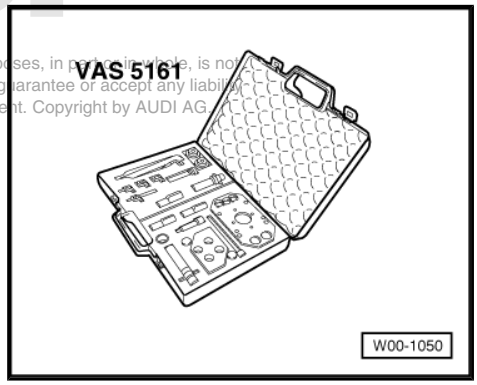

Protected by copyright. Copying for private or commercial purposes, in part or in whole, is not permitted unless authorised by AUDI AG. AUDI AG does not guarantee or accept any liability with respect to the correctness of information in this document. Copyright by AUDI AG.

♦ Engine and gearbox support -VAS 6095-

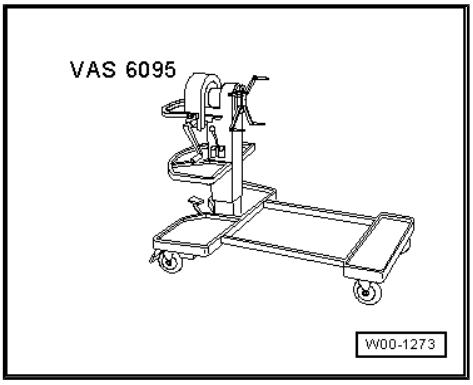

♦ Cylinder head clamping device -VAS 6419-

Procedure

– Remove camshafts ⇒ page 126 .

– Mark original positions of rocker fingers and hydraulic compensation elements for reinstallation.

– Remove rocker fingers together with hydraulic compensation elements and put down on a clean surface.

– Insert cylinder head clamping device -VAS 6419- into engine and gearbox support -VAS 6095- .

– Secure cylinder head in cylinder head clamping device as illustrated.

– Connect cylinder head clamping device to compressed air.

– Using lever -arrow-, slide air pad under combustion chamber where valve stem oil seal is to be removed.

– Apply just enough compressed air to bring air pad into contact with valve heads.

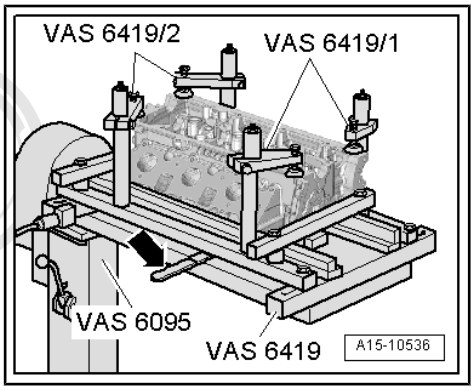

– Fit guide plate -VAS 5161/9- onto cylinder head.

– Secure guide plate with knurled screws -VAS 5161/12-.

– Apply drift -VAS 5161/3- to guide plate and use plastic-headed hammer to release sticking valve cotters.

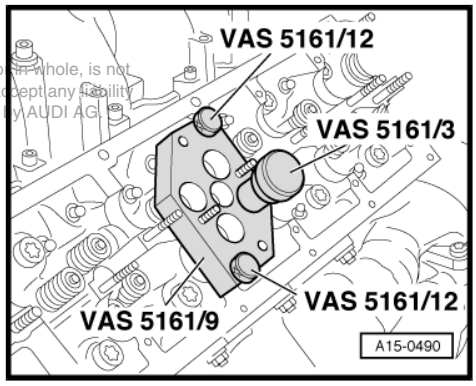

Copyright by AUDI AG. This document is provided for internal use purposes, in part or in whole, is not permitted unless authorised by AUDI AG. AUDI AG does not guarantee or accept any liability. Copyright by AUDI AG.

– Screw snap-in device -VAS 5161/6- with engaging fork -VAS 5161/5- into guide plate.
– Slide knurled spacer ring -VAS 5161/17- onto assembly cartridge -VAS 5161/8- .
– Attach pressure fork -VAS 5161/2- to snap-in device and push assembly cartridge down.
– At the same time, turn knurled screw of assembly cartridge clockwise until tips engage in valve cotters.
– Move knurled screw back and forth slightly; the valve cotters are thus forced apart and taken up by the assembly cartridge.
– Release pressure fork.
– Take off assembly cartridge with knurled spacer ring.
– Detach valve spring with valve spring plate.

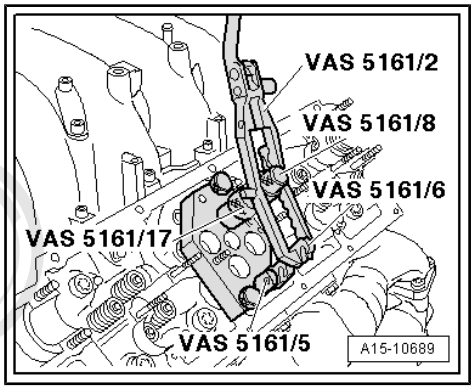

– Pull off valve stem oil seal with valve stem seal puller -3364- .

Protected by copyright. Copying for private or commercial purposes, in part or in whole, is not permitted unless authorised by AUDI AG. AUDI AG does not guarantee or accept any liability with respect to the correctness of information in this document. Copyright by AUDI AG.

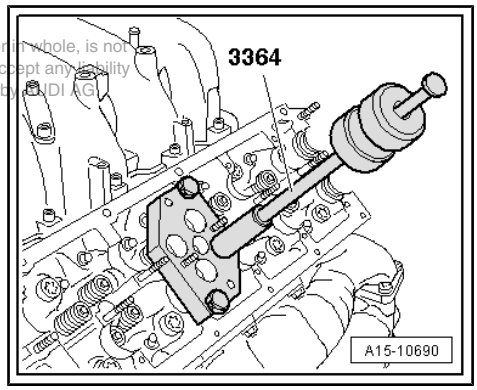

> ⚠ **Caution**
>
> *Make sure valve stem oil seals are not damaged when installing.*
>
> ♦ *New valve stem oil seals -B- are supplied with plastic sleeve; fit plastic sleeve -A- onto valve stem.*

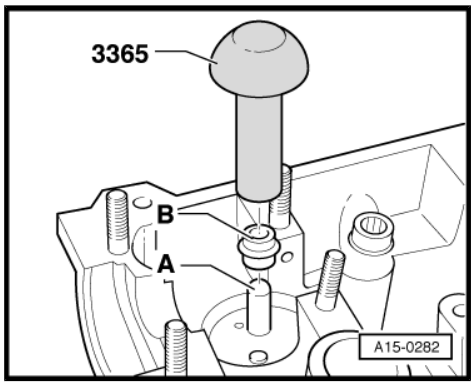

– Lightly oil sealing lip of valve stem oil seal.
– Slide valve stem oil seal onto plastic sleeve.
– Carefully press valve stem oil seal onto valve guide using valve stem seal fitting tool -3365- .
– Take off plastic sleeve.

If valve cotters had been removed from assembly cartridge they must first be inserted in insertion device -VAS 5161/18- .

• Larger diameter of valve cotters faces upwards.
– Insert valve spring and valve spring plate.
– Press assembly cartridge onto insertion device from above and take up valve cotters.

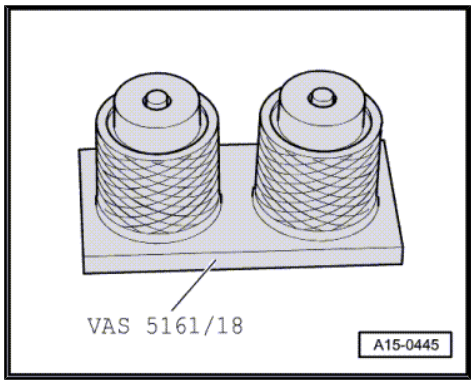

– Insert assembly cartridge in guide plate -VAS 5161/9- again.
– Press down pressure fork and pull knurled screw upwards while turning screw in both directions - this will insert the valve cotters.
– Release the pressure fork with knurled screw still in pulled position.
– Repeat procedure for each valve.

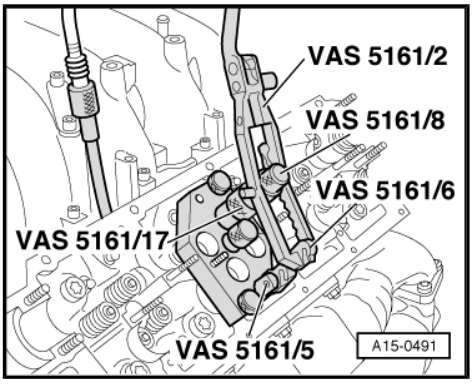

Assembling

Installation is carried out in the reverse order; note the following:

– Install camshafts ⇒ page 126 .

2.10 Valve dimensions

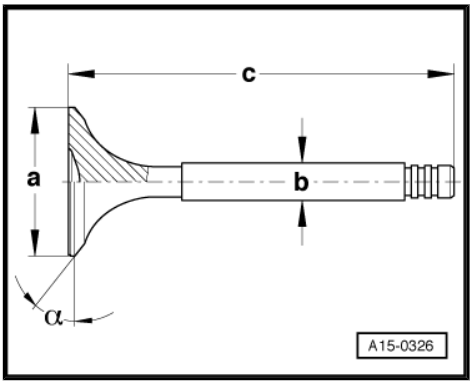

Note

Inlet and exhaust valves must not be machined. Only grinding-in is permitted.

Dimension		Inlet valve	Exhaust valve
∅ a	mm	27.00 … 27.20	24.00 … 24.20
∅ b	mm	5.958 … 5.972	5.958 … 5.972
c	mm	100.35 … 100.65	100.35 … 100.65
α	∠°	45	45

2.11 Checking valve guides

Special tools and workshop equipment required

♦ Universal dial gauge bracket -VW 387-

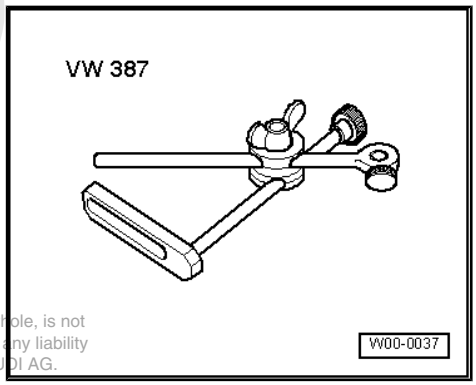

Protected by copyright. Copying for private or commercial purposes, in part or in whole, is not permitted unless authorised by AUDI AG. AUDI AG does not guarantee or accept any liability with respect to the correctness of information in this document. Copyright by AUDI AG.

♦ Dial gauge -VAS 6079-

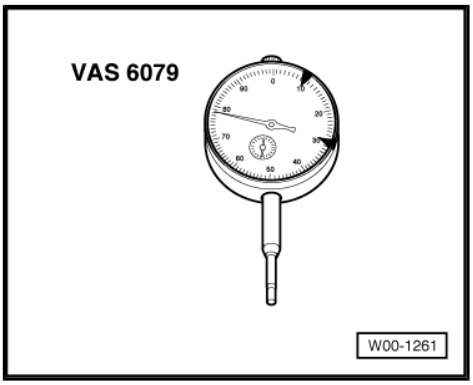

Procedure

Note

- *If the valve has to be renewed as part of a repair, use a new valve for the measurement.*
- *Only insert inlet valve into inlet guide and exhaust valve into exhaust guide, as the stem diameters are different.*

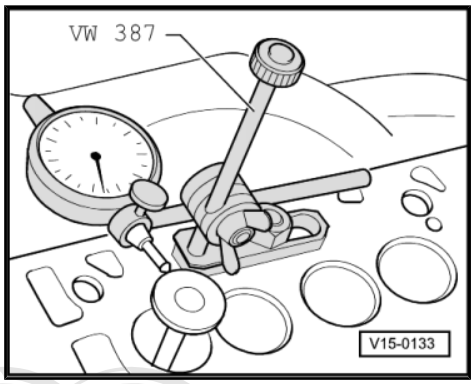

– Insert valve into guide.

• End of valve stem must be flush with valve guide.

– Secure dial gauge -VAS 6079- to cylinder head with universal dial gauge bracket -VW 387- as shown in illustration.

– Measure the amount of sideways play.

Wear limit:

• Inlet valve guide: 1.0 mm

• Exhaust valve guide: 1.3 mm

– If the wear limit is exceeded, repeat the measurement with new valves.

– Renew cylinder head if wear limit is still exceeded.

Note

Valve guides cannot be renewed.

2.12 Checking valves

– Visually inspect for scoring on valve stems and valve seat surfaces.

– Renew valve if scoring is clearly visible.

Protected by copyright. Copying for private or commercial purposes, in part or in whole, is not permitted unless authorised by AUDI AG. AUDI AG does not guarantee or accept any liability with respect to the correctness of information in this document. Copyright by AUDI AG.

17 – Lubrication

1 Sump (bottom section), oil pump, sump (top section)

Caution

Risk of damage to catalytic converter.

- *The oil level must not be above the "max" mark on the dipstick.*

Note

- *If large quantities of metal shavings or particles are found in the engine oil when repairing the engine, the oil passages must be cleaned carefully, and the oil cooler must be renewed in order to prevent further damage occurring later.*
- *Viscosity grades and oil specifications ⇒ Maintenance ; Booklet 403 .*
- *Oil capacities ⇒ Maintenance tables .*

Protected by copyright. Copying for private or commercial purposes, in part or in whole, is not permitted unless authorised by AUDI AG. AUDI AG does not guarantee or accept any liability with respect to the correctness of information in this document. Copyright by AUDI AG.

1.1 Sump, oil pump - exploded view

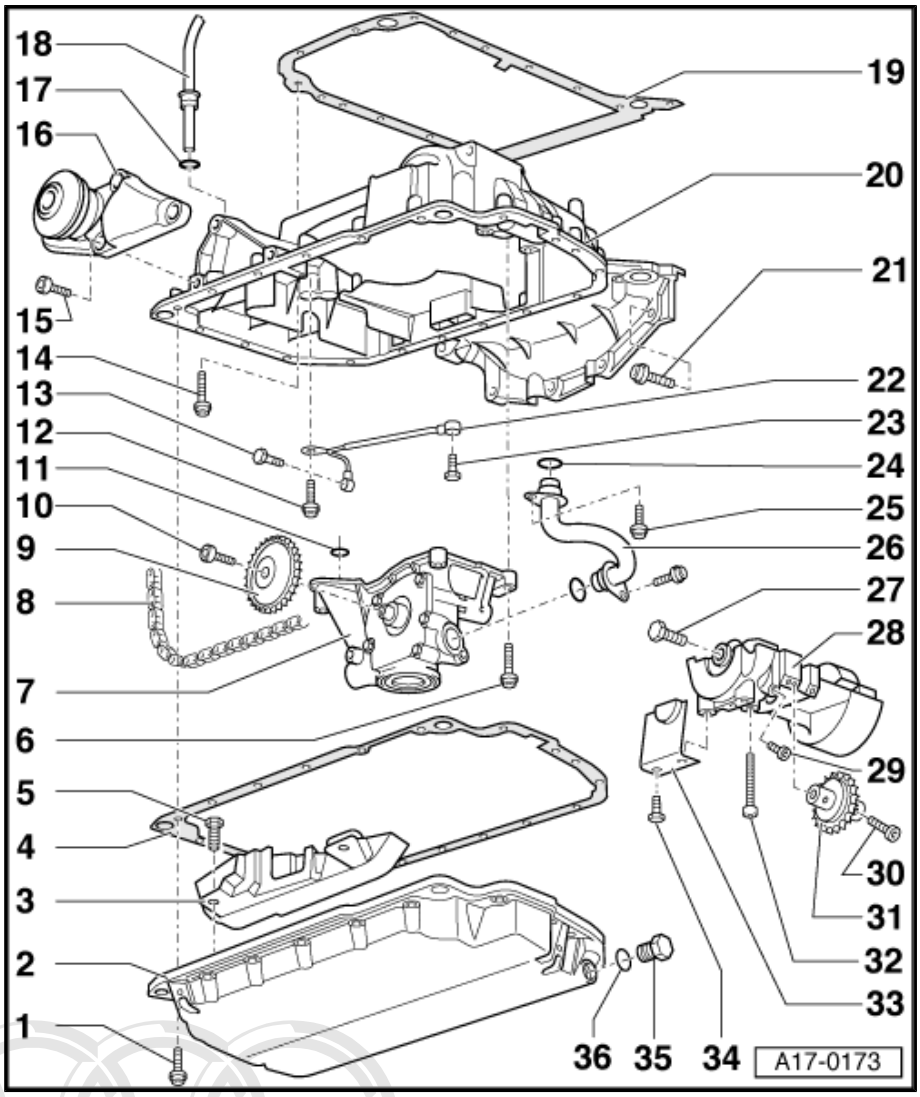

1 - Bolt

- ❑ Tighten in stages and in diagonal sequence
- ❑ 10 Nm

2 - Sump (bottom section)

- ❑ Different versions for engines with moulded gasket or engines with liquid gasket; refer to ⇒ Electronic parts catalogue
- ❑ Removing and installing ⇒ page 144

3 - Chain guard

4 - Gasket

Moulded gasket - vehicles up to approx. 11.1998

- ❑ Renewing ⇒ page 145

Liquid gasket - vehicles from approx. 12.1998 onwards

- ❑ Renewing ⇒ page 146

5 - Bolt

- ❑ 10 Nm

6 - Bolt

- ❑ 22 Nm

7 - Oil pump

- ❑ With pressure control valve: 3.8 bar
- ❑ With pressure relief valve (11 bar)
- ❑ Removing and installing ⇒ page 147

8 - Drive chain for oil pump

- ❑ Removing and installing ⇒ “2.3 Removing and installing sealing flange (pulley end)”, page 75

9 - Sprocket for oil pump

10 - Bolt

- ❑ 22 Nm

11 - O-ring

- ❑ Inserted in sealing flange (pulley end)
- ❑ Renew

Protected by copyright. Copying for private or commercial purposes, in part or in whole, is not permitted unless authorised by AUDI AG. AUDI AG does not guarantee or accept any liability with respect to the correctness of information in this document. Copyright by AUDI AG.

12 - Bolt

- ❑ 10 Nm

13 - Banjo bolt

- ❑ 10 Nm

14 - Bolt

- ❑ M6 to cylinder block = 13 Nm
- ❑ M6 to sealing flange = 10 Nm

- ❑ M7 = 16 Nm
- ❑ Allocation ⇒ Electronic parts catalogue

15 - Bolt

- ❑ 45 Nm

16 - Torque reaction support

17 - O-ring

- ❑ Renew

18 - Guide tube for oil dipstick

- ❑ Tighten to 10 Nm

19 - Gasket

Moulded gasket - vehicles up to approx. 05.1998

- ❑ Renewing ⇒ page 161

Liquid gasket - vehicles from approx. 06.1998 onwards

- ❑ Renewing ⇒ page 162

20 - Sump (top section)

- ❑ Different versions for engines with moulded gasket or engines with liquid gasket; refer to ⇒ Electronic parts catalogue
- ❑ Removing and installing ⇒ page 153

21 - Bolt

- ❑ 45 Nm

22 - Oil pipe

- ❑ From oil pump to balance shaft assembly

23 - Banjo bolt

- ❑ 10 Nm

24 - O-ring

- ❑ Renew

25 - Bolt

- ❑ 10 Nm

26 - Oil pressure pipe

27 - Bolt

- ❑ 45 Nm

28 - Balance shaft assembly

- ❑ With balance shaft
- ❑ Removing and installing ⇒ “1.6 Removing sump (top section)”, page 153

Protected by copyright. Copying for private or commercial purposes, in part or in whole, is not permitted unless authorised by AUDI AG. AUDI AG does not guarantee or accept any liability with respect to the correctness of information in this document. Copyright by AUDI AG.

29 - Bolt

- ❑ 10 Nm

30 - Bolt

- ❑ 10 Nm

31 - Idler sprocket

32 - Bolt

- ❑ 22 Nm

33 - Baffle plate

34 - 10 Nm

35 - Oil drain plug

- ❑ 25 Nm

36 - Seal

- ❑ Renew

1.2 Removing sump (bottom section)

Special tools and workshop equipment required

- ♦ Drip tray for workshop hoist -VAS 6208- or -V.A.G 1306-

Protected by copyright. Copying for private or commercial purposes, in part or in whole, is not permitted unless authorised by AUDI AG. AUDI AG does not guarantee or accept any liability with respect to the correctness of information in this document. Copyright by AUDI AG.

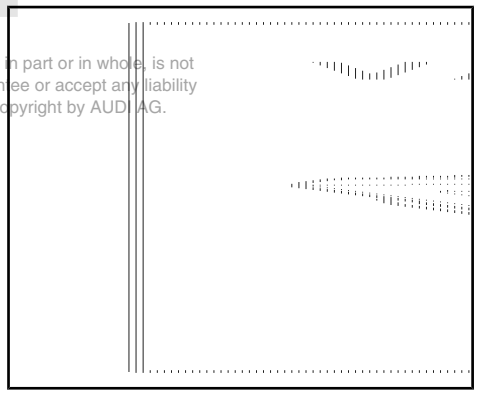

Removing

> ⚠ WARNING
>
> *Hot steam/hot coolant can escape - risk of scalding.*
>
> - *The cooling system is under pressure when the engine is hot.*
> - *To allow pressure to dissipate, cover filler cap on expansion tank with cloth and open carefully.*

– Open filler cap on expansion tank.

– Drain off engine oil ⇒ Maintenance ; Booklet 403 .

– Unplug electrical connector -arrow- at oil level and oil temperature sender -G266- .

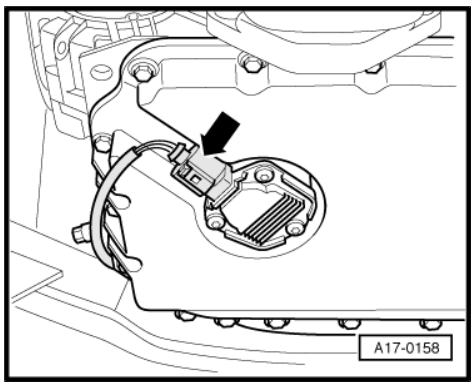

– Place drip tray for workshop hoist -VAS 6208- beneath engine.
– Open drain plug -arrow- and drain off coolant.
– Remove bolt -2- and detach coolant drain pipe -1- from cylinder block.

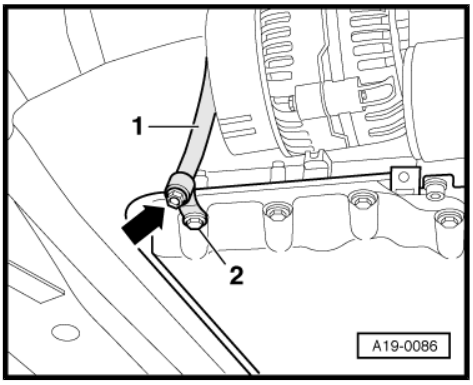

– Remove bolts and carefully detach sump (bottom section) -1- towards front.

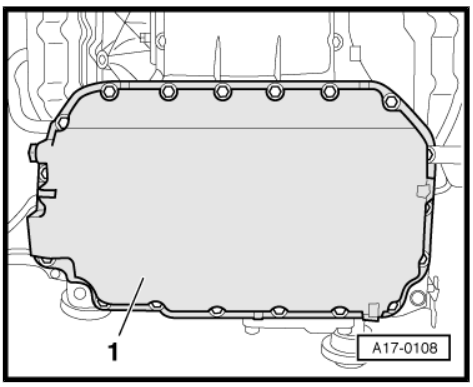

Note

- *On vehicles with liquid gasket, carefully release sump (bottom section) from bonded joint.*
- *Pay attention to chain guard in sump when detaching sump (bottom section).*

1.3 Installing sump (bottom section) - engines with moulded gasket

Procedure

Installation is carried out in the reverse order; note the following:

Caution

Risk of leaks.

- ***It is essential to use a moulded gasket again if sump (bottom section) was previously fitted with such a gasket.***

Protected by copyright. Copying for private or commercial purposes, in part or in whole, is not permitted unless authorised by AUDI AG. AUDI AG does not guarantee or accept any liability with respect to the correctness of information in this document. Copyright by AUDI AG.

Note

Renew gaskets, seals and O-rings.

– Clean sealing surfaces.
– Fit sump (bottom section) and tighten all bolts initially to 5 Nm in diagonal sequence.
– Tighten bolts on sump (bottom section) in diagonal sequence
– Fit new O-ring and locate coolant drain pipe carefully on cylinder block and press it as far as it will go into drilling using a lever.
– Fill up with coolant ⇒ page 179 .
– Fill up with engine oil and check engine oil level ⇒ Maintenance ; Booklet 403 .

Tightening torques

Component	Nm
Sump (bottom section) to sump (top section)	10
Coolant drain pipe to sump	10
Drain plug to coolant drain pipe	10
Oil drain plug	25

1.4 Installing sump (bottom section) - engines with liquid gasket

Special tools and workshop equipment required

- Electric drill with plastic brush attachment
- Safety goggles
- Sealant ⇒ Electronic parts catalogue

Procedure

Installation is carried out in the reverse order; note the following:

Caution

Risk of leaks.

- *It is essential to use a liquid gasket again if sump (bottom section) was previously fitted with such a gasket.*

ted by copyright. Copying for private or commercial purposes, in part or in whole, is not tted unless authorised by AUDI AG. AUDI AG does not guarantee or accept any liability with respect to the correctness of information in this document. Copyright by AUDI AG.

Note

Renew gaskets, seals and O-rings.

– Remove remaining sealant on bottom and top sections of sump with a rotating plastic brush or similar.

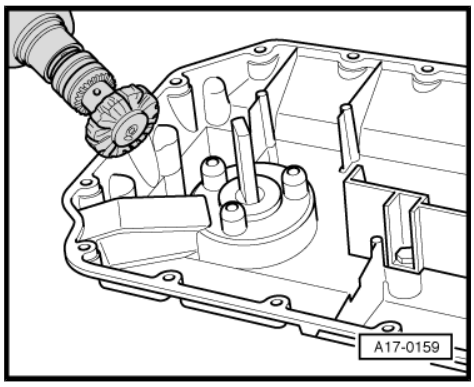

WARNING

Protect eyes against injuries.

- *Wear safety goggles.*

– Clean sealing surfaces; they must be free of oil and grease.

Note

Note the use-by date of the sealant.

– Cut off nozzle of tube at front marking (nozzle ∅ approx. 3 mm).

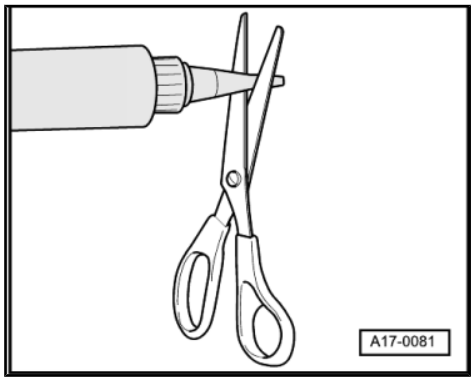

Caution

Make sure lubrication system is not clogged by excess sealant.

- *The bead of sealant must not be thicker than specified.*

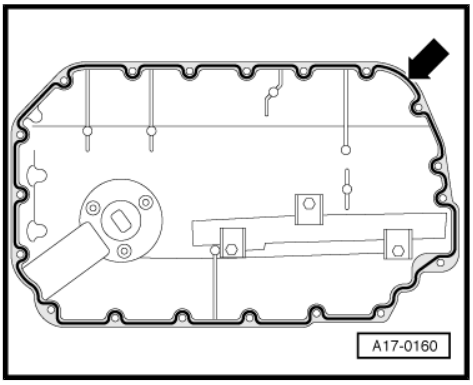

– Apply the bead of sealant onto the clean sealing surface of the sump (bottom section) as illustrated.

• Width of sealant bead -arrow-: 2 ... 3 mm.

Note

The sump (bottom section) must be installed within 5 minutes after applying the sealant.

– Fit sump (bottom section) and tighten all bolts initially to 5 Nm in diagonal sequence.

– Tighten bolts on sump (bottom section) in diagonal sequence

– Fit new O-ring and locate coolant drain pipe carefully on cylinder block and press it as far as it will go into drilling using a lever.

– Fill up with coolant ⇒ page 179 .

– Fill up with engine oil and check engine oil level ⇒ Maintenance ; Booklet 403.

Protected by copyright. Copying for private or commercial purposes, in part or in whole, is not permitted unless authorised by AUDI AG. AUDI AG does not guarantee or accept any liability with respect to the correctness of information in this document. Copyright by AUDI AG.

Tightening torques

Component	Nm
Sump (bottom section) to sump (top section)	10
Coolant drain pipe to sump	10
Drain plug to coolant drain pipe	10
Oil drain plug	25

1.5 Removing and installing oil pump

Special tools and workshop equipment required

- Locking pin -3242-

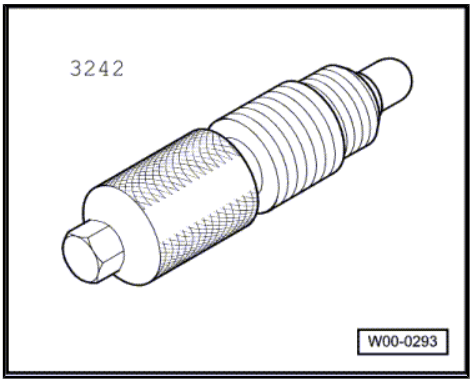

♦ Locking pin -T10060 A-

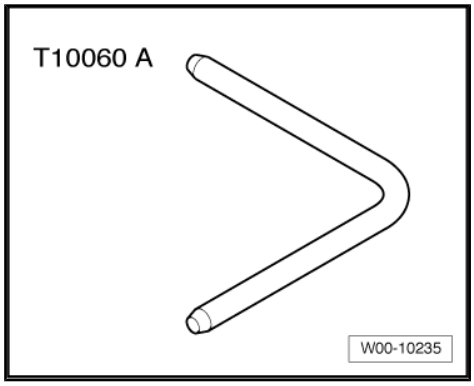

Removing

– Detach caps on engine cover panel.

– Unbolt and remove engine cover panel -arrows-.

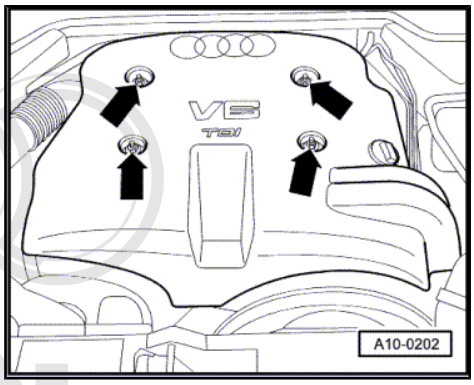

– Unscrew viscous fan (32 mm).

Protected by copyright. Copying for private or commercial purposes, in part or in whole, is not permitted unless authorised by AUDI AG. AUDI AG does not guarantee or accept any liability with respect to the correctness of information in this document. Copyright by AUDI AG.

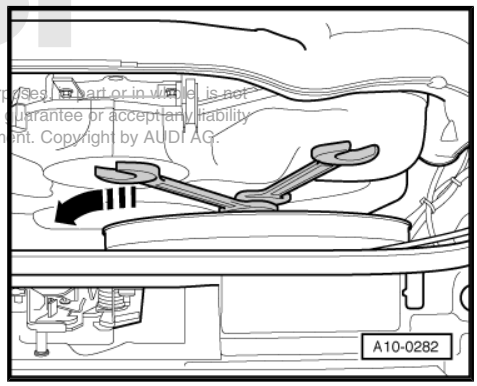

– Unscrew bolt -arrow- from front and remove air duct for viscous fan.

– Detach viscous fan with air duct.

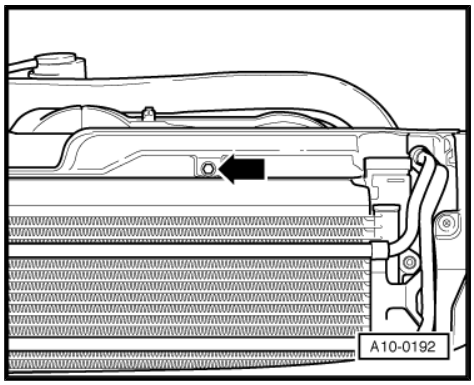

– Remove poly V-belt cover -arrows-.

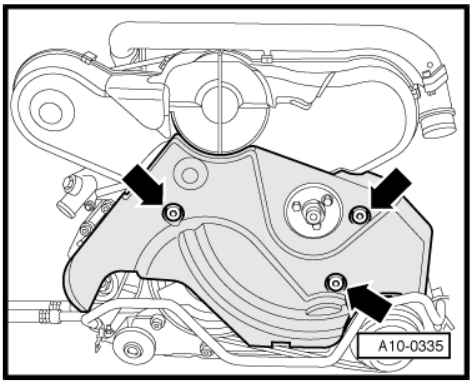

Note

Watch position of spacer sleeves for poly V-belt cover.

WARNING

Hot steam/hot coolant can escape - risk of scalding.

- ***The cooling system is under pressure when the engine is hot.***
- ***To allow pressure to dissipate, cover filler cap on expansion tank with cloth and open carefully.***

– Open filler cap on expansion tank.

– Open oil filler cap.

– Turn engine until the marking “- OT -” (TDC) is visible on camshaft.

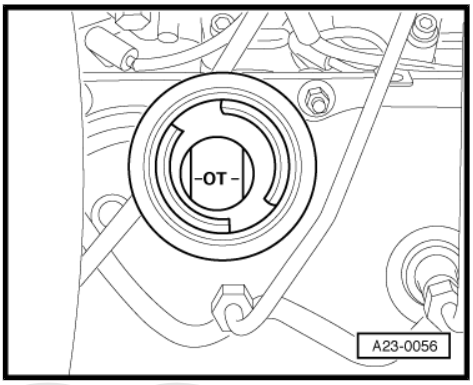

Note

Turn over the engine at the central bolt on the crankshaft.

– Remove sump (bottom section) ⇒ page 144 .

– Unbolt bracket for noise insulation -arrows-.

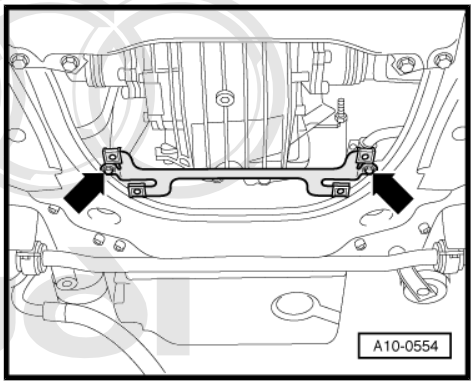

Protected by copyright. Copying for private or commercial purposes, in part or in whole, is not permitted unless authorised by AUDI AG. AUDI AG does not guarantee or accept any liability with respect to the correctness of information in this document. Copyright by AUDI AG.

– Unscrew plug for TDC marking from cylinder block.

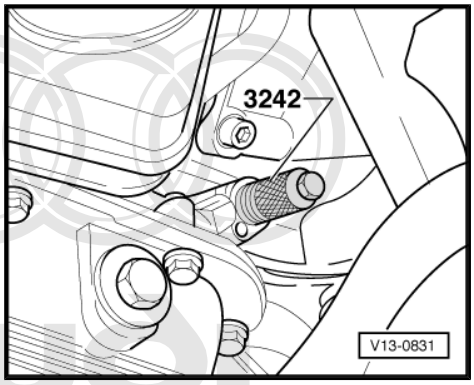

Note

There is a TDC drilling in the crankshaft directly behind the plug (it is possible to feel the hole).

WARNING

Injury risk.

- *Do not rotate the crankshaft while feeling for the TDC drilling with your finger.*

Protected by copyright. Copying for private or commercial purposes, in part or in whole, is not permitted unless authorised by AUDI AG. AUDI AG does not guarantee or accept any liability with respect to the correctness of information in this document. Copyright by AUDI AG.

– Screw locking pin -3242- into bore; if necessary, turn crankshaft backwards and forwards slightly to fully centralise locking pin.

– Unscrew bolts -1- and remove baffle plate.

– Remove bolt -2-.

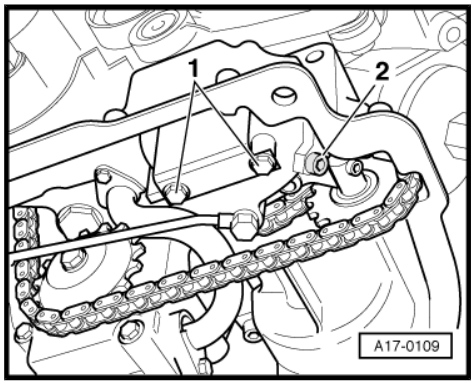

– Lock balance shaft with locking pin -3204- .

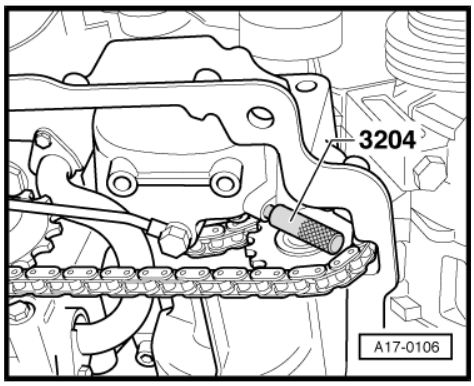

– Slacken bolt -1- for chain sprocket at oil pump; do not remove bolt.
– Slacken bolt -3- for chain sprocket at balance shaft.
– Unscrew banjo bolts -4- and hexagon bolt -2- and detach oil pipe leading to balance shaft.

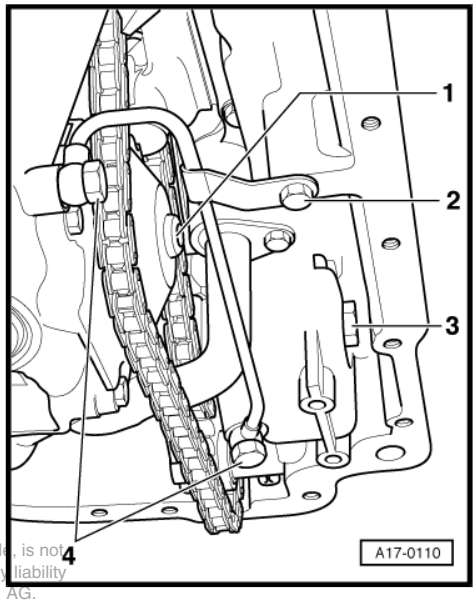

Protected by copyright. Copying for private or commercial purposes, in part or in whole, is not permitted unless authorised by AUDI AG. AUDI AG does not guarantee or accept any liability with respect to the correctness of information in this document. Copyright by AUDI AG.

– Remove oil pressure pipe -arrows-.

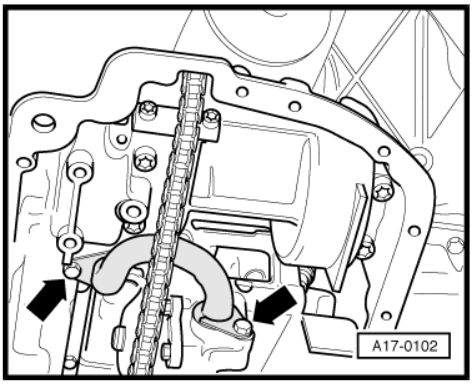

Note

Caution: oil emerges at pump.

– Press drive chain upwards using a screwdriver.

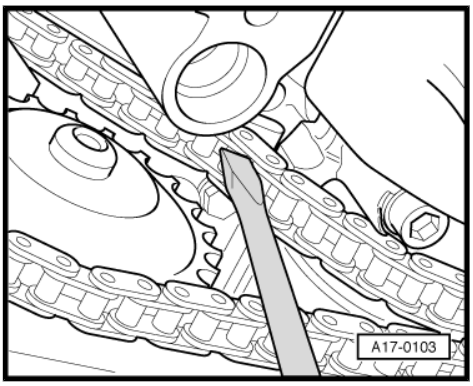

– Slacken bolts -arrows- on idler sprocket for drive chain.
– Detach idler sprocket and chain sprocket of oil pump.

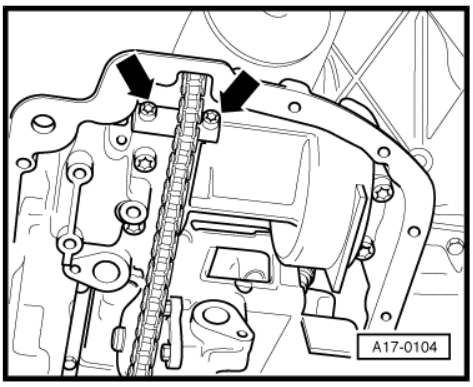

– Remove oil pump -arrows-.

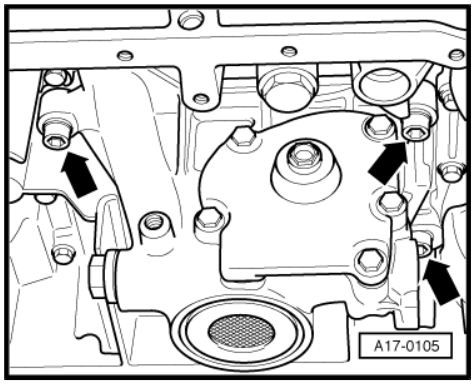

Installing

Installation is carried out in the reverse order; note the following:

Note

Renew gaskets, seals and O-rings.

– Check that locking pin -3242- is screwed in.

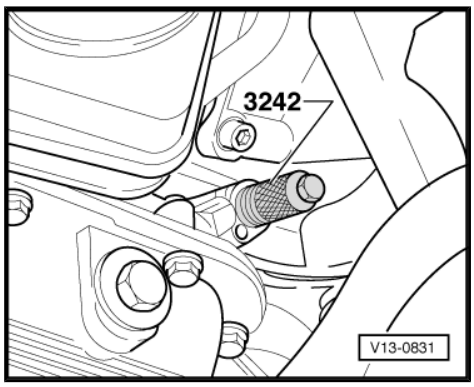

– To lock balance shaft, insert locking pin -T10060 A- or locking pin -3204- .

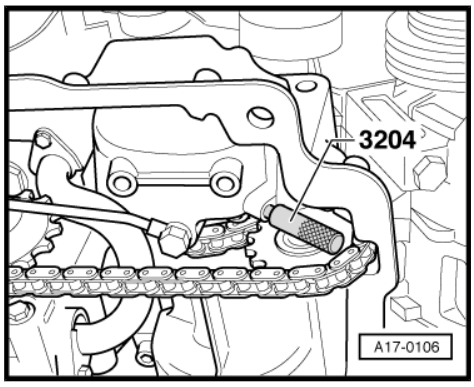

Protected by copyright. Copying for private or commercial purposes, in part or in whole, is not permitted unless authorised by AUDI AG. AUDI AG does not guarantee or accept any liability with respect to the correctness of information in this document. Copyright by AUDI AG.

– Now tighten bolt for chain sprocket -3-.
– Screw plug for the TDC mark into cylinder block with a new seal.
– Install sump (bottom section): vehicles with moulded gasket ⇒ page 145 , vehicles with liquid gasket ⇒ page 146 .
– Install viscous fan ⇒ page 195 .

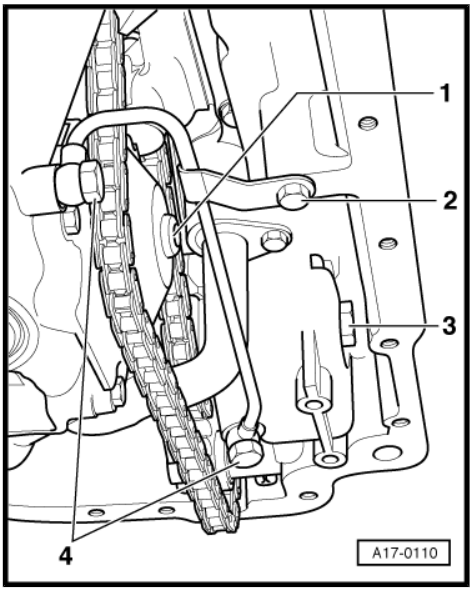

Tightening torques

Component		Nm
Oil pump to cylinder block		22
Oil pressure pipe to	Oil pump	10
	Sump (top section)	10
Oil pipe going to balance shaft to oil pump		10
Oil pipe to mounting bracket for balance shaft		10
Idler sprocket for drive chain to sump (top section)		10
Baffle plate to mounting bracket for balance shaft		10
Chain sprocket for oil pump to oil pump		22
Chain sprocket for balance shaft to balance shaft		45
Screw plug to balance shaft assembly		10
Sealing plug in cylinder block		10

Protected by copyright. Copying for private or commercial purposes, in part or in whole, is not permitted unless authorised by AUDI AG. AUDI AG does not guarantee or accept any liability with respect to the correctness of information in this document. Copyright by AUDI AG.

1.6 Removing sump (top section)

Special tools and workshop equipment required

♦ Support bracket -10 - 222 A-

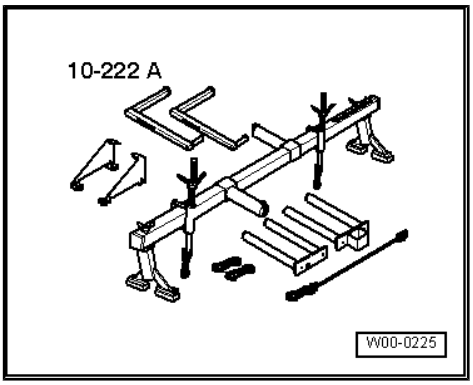

♦ Workshop hoist -VAS 6100-

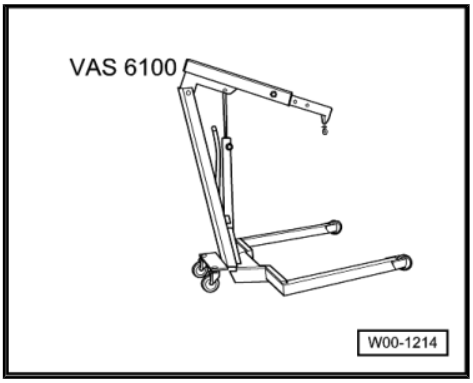

- Drip tray for workshop hoist -VAS 6208-

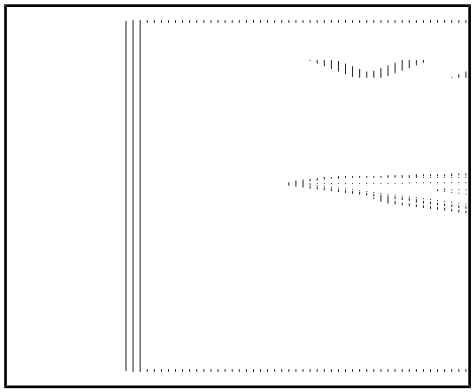

Removing

Caution

To prevent damage to the electronic components when disconnecting the battery:

- *Observe notes on procedure for disconnecting the battery.*

– Disconnect earth cable at battery ⇒ Rep. Gr. 27 .

WARNING

Hot steam/hot coolant can escape - risk of scalding.

- *The cooling system is under pressure when the engine is hot.*
- *To allow pressure to dissipate, cover filler cap on expansion tank with cloth and open carefully.*

– Open filler cap on expansion tank.

– Remove poly V-belt for power steering pump, alternator and viscous fan ⇒ page 31 .

– Push out pin -1-, take out clip and remove electric fan.

– Move wiring for electric fan clear.

– Turn electric fan in direction of -arrow- and detach it.

– Move electric fan clear to one side.

– Unbolt dipstick guide tube on cylinder head (right-side).

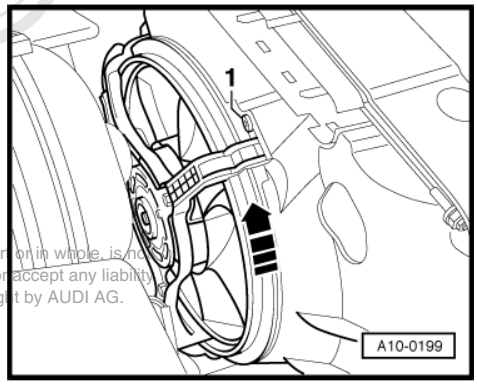

Protected by copyright. Copying for private or commercial purposes, in part or in whole, is not permitted unless authorised by AUDI AG. AUDI AG does not guarantee or accept any liability with respect to the correctness of information in this document. Copyright by AUDI AG.

– Remove air hose from air cleaner -arrows-.

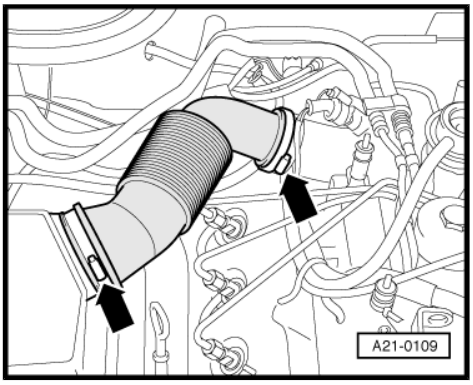

– Remove hose leading to turbocharger -arrows-.

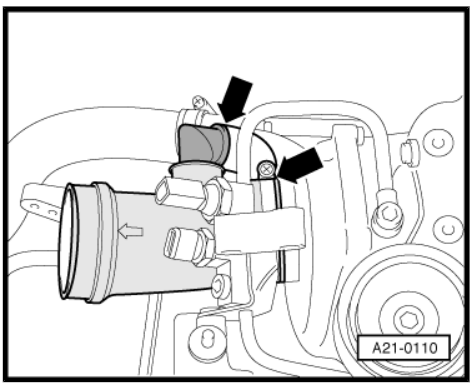

– Remove lifting eye from intake manifold (rear left) and bolt it onto intake manifold (rear right) together with oil line -arrow- (tighten to 22 Nm).

Protected by copyright. Copying for private or commercial purposes, in part or in whole, is no permitted unless authorised by AUDI AG. AUDI AG does not guarantee or accept any liabilit with respect to the correctness of information in this document. Copyright by AUDI AG.

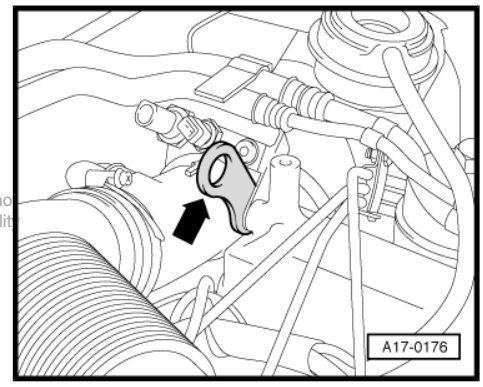

– Remove lifting eye from intake manifold (front left) and bolt it onto intake manifold (rear left) -arrow- (tighten to 22 Nm).

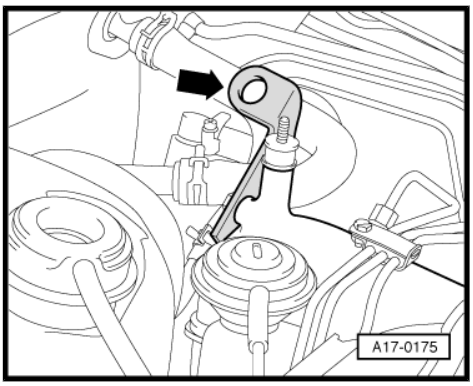

– Remove cover panels -1 … 4-.

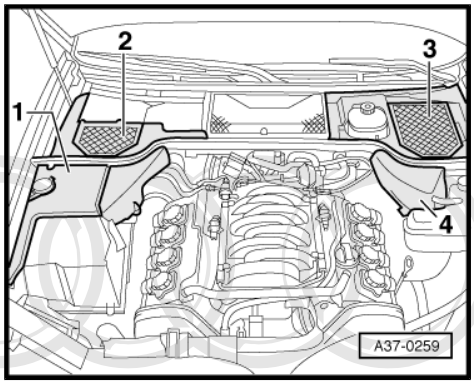

– Position support bracket -10 - 222 A- with adapter -10 - 222 A /4- on bolts of suspension turret and make sure it is stable.

• Spindle (left-side) should be at rear.

• Spindle (right-side) should be at front.

– Attach spindles of support bracket to rear engine lifting eyes.

– Take up weight of engine with spindles of support bracket, but do not lift.

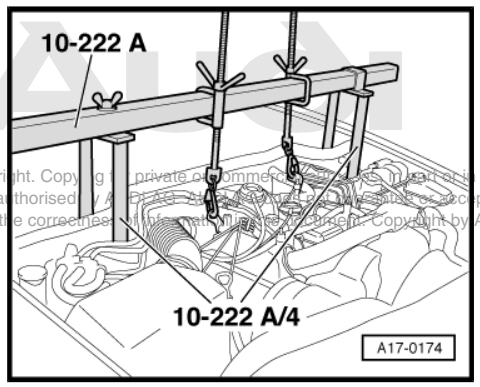

Protected by copyright. Copying for private or commercial purposes, in part or in whole, is not permitted unless authorised by AUDI AG. AUDI AG does not guarantee or accept any liability with respect to the correctness of information in this document. Copyright by AUDI AG.

– Open oil filler cap.

– Turn engine until the marking “- OT -” (TDC) is visible on camshaft.

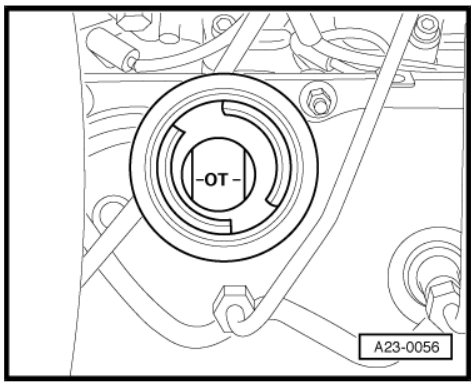

Note

Turn over the engine at the central bolt on the crankshaft.

– Remove bolts -arrows- securing exhaust pipe for auxiliary/ supplementary heater to noise insulation.

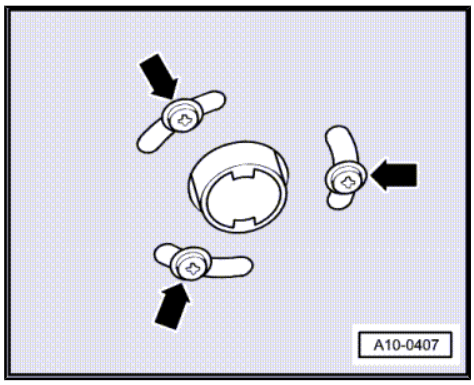

– Release quick-release fasteners -1- and -2- and take off front and rear noise insulation.

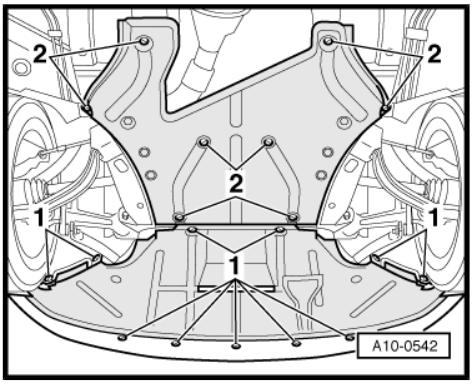

– Unbolt bracket for noise insulation -arrows-.

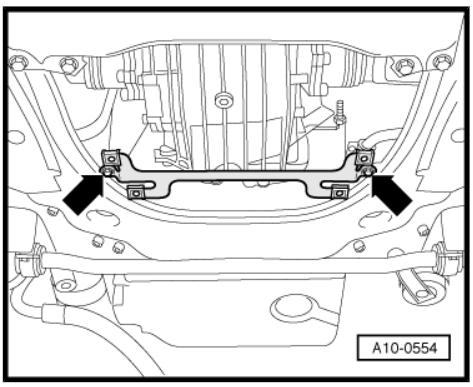

WARNING

Risk of injury caused by refrigerant.

- *The air conditioner refrigerant circuit must not be opened.*

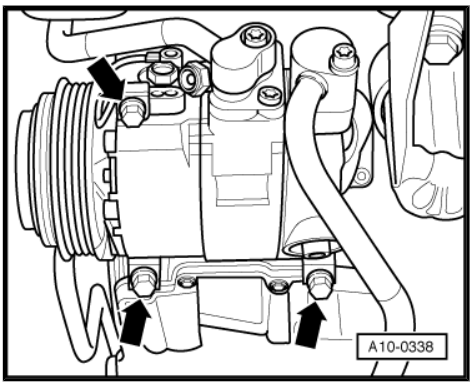

– Unbolt air-conditioner compressor from bracket -arrows-.

Caution

Danger of damage to refrigerant lines and hoses.

- *Do NOT stretch, kink or bend refrigerant lines and hoses.*

– Tie air conditioner compressor up to side at body longitudinal member (leave hoses connected).

– Unbolt bracket for A/C compressor -arrows-.

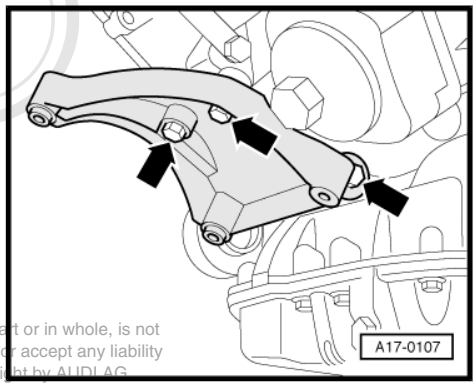

Protected by copyright. Copying for private or commercial purposes, in part or in whole, is not permitted unless authorised by AUDI AG. AUDI AG does not guarantee or accept any liability with respect to the correctness of information in this document. Copyright by AUDI AG

– Remove torque reaction support -1- and stop for torque reaction support -2-.

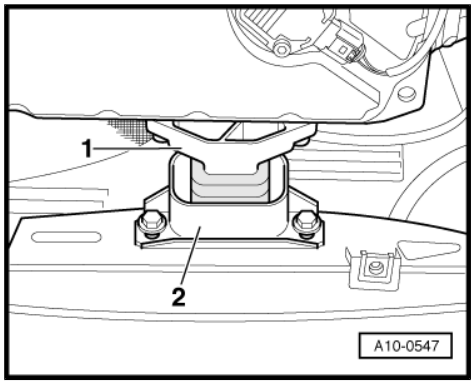

– Unscrew damper weight (right-side) -arrow- from subframe.
– Remove bolts for alternator.
– Detach alternator to front.
– Detach wires from alternator (removed).

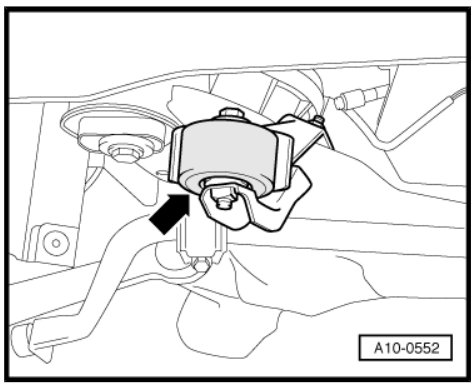

– Detach wires -1- and -2- from starter.
– Unscrew bolts -arrows- securing starter from gearbox side.
– Detach starter.

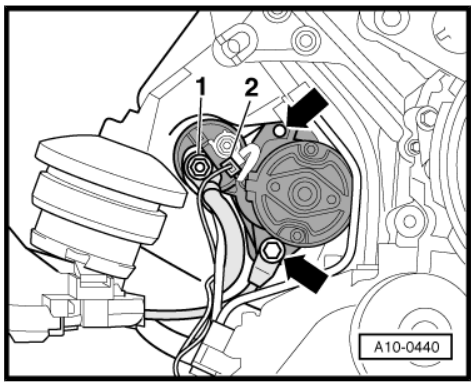

– Unscrew clamp -arrow- and move wiring clear.

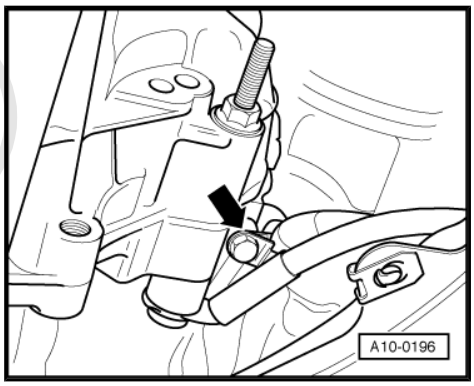

Protected by copyright. Copying for private or commercial purposes, in part or in whole, is not permitted unless authorised by AUDI AG. AUDI AG does not guarantee or accept any liability with respect to the correctness of information in this document. Copyright by AUDI AG.

– Unplug electrical connector -arrow- at oil level and oil temperature sender -G266- .

– Place drip tray for workshop hoist -VAS 6208- beneath engine.

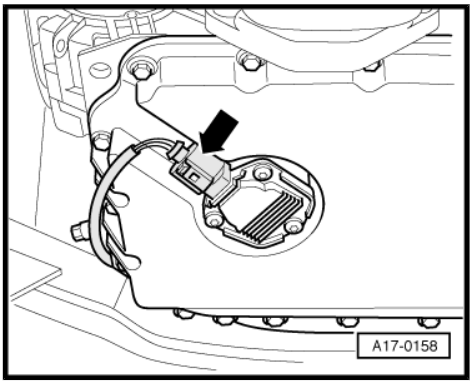

– Open drain plug -arrow- and drain off coolant.

– Remove bolt -2- and detach coolant drain pipe -1- from cylinder block.

– Drain off engine oil ⇒ Maintenance ; Booklet 403 .

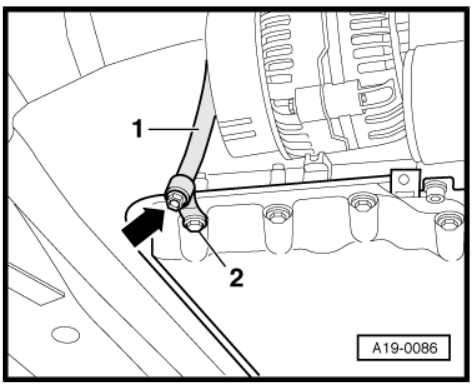

– Remove bolts and carefully detach sump (bottom section) -1- towards front.

Note

- *On vehicles with liquid gasket, carefully release sump (bottom section) from bonded joint.*
- *Pay attention to chain guard in sump when detaching sump (bottom section).*

– Remove oil pump ⇒ page 147 .

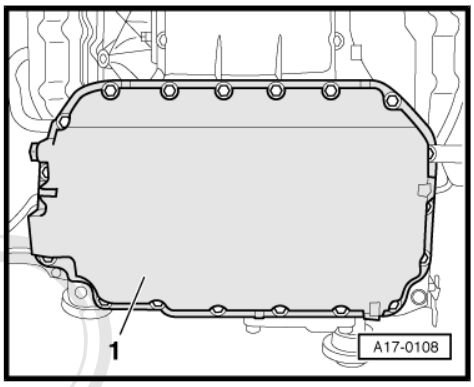

– Unscrew bolts (bottom) -arrows- at engine mountings.

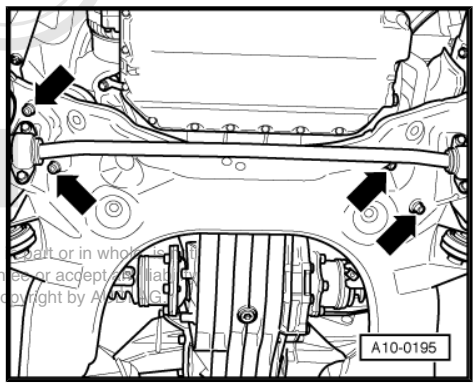

Protected by copyright. Copying for private or commercial purposes, in part or in whole, is not permitted unless authorised by AUDI AG. AUDI AG does not guarantee or accept any liability with respect to the correctness of information in this document. Copyright by AUDI AG.

– If fitted, unclip actuator rod for vehicle level sender at bottom transverse link -arrow-.

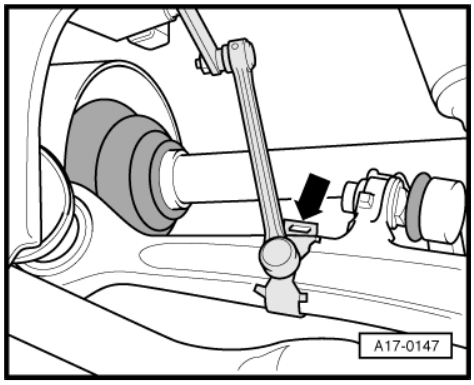

– Loosen rear bolt -2- on gearbox mountings (left and right) a few turns; unscrew and remove front bolt -1- on gearbox mounting (left-side).
– Support subframe with workshop hoist.

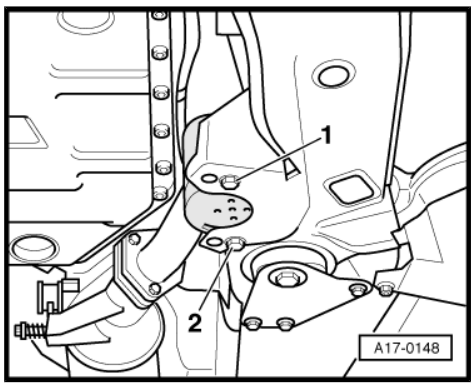

– Unscrew front bolts of subframe (left and right) -arrow-.

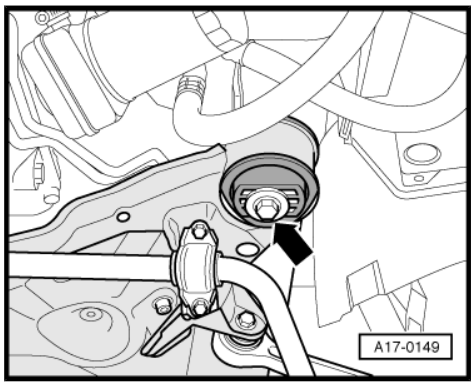

Note

To avoid having to check and adjust wheel alignment, only loosen the front subframe mountings and lower the subframe at the front.

– Lower subframe slowly using workshop hoist.
– Unscrew engine/gearbox connecting bolts in area of sump (top section).
– Press dipstick guide tube out of sump (top section).

– Unscrew bolts -1- and -2- for sump (top section).
– Press sump (top section) off spring pins on cylinder block.

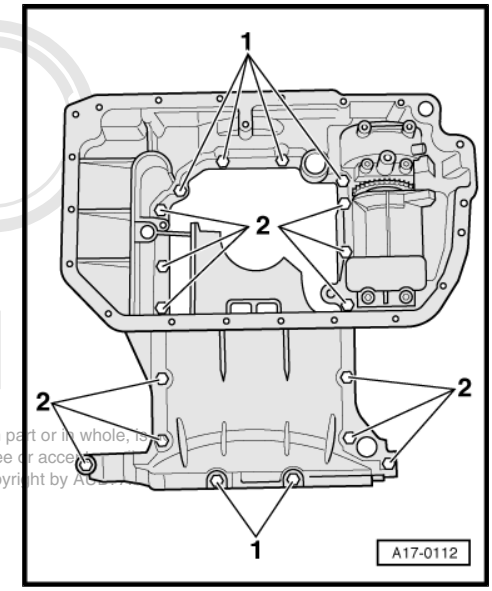

Protected by copyright. Copying for private or commercial purposes, in part or in whole, is not permitted unless authorised by AUDI AG. AUDI AG does not guarantee or accept any liability with respect to the correctness of information in this document. Copyright by AUDI AG.

Note

The balance shaft assembly can be unbolted from the sump (top section) -arrows-.

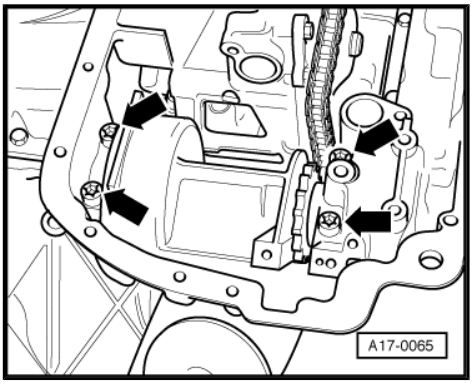

1.7 Installing sump (top section) - engines with moulded gasket

Procedure

Installation is carried out in the reverse order; note the following:

Caution

Risk of leaks.

- ***It is essential to use a moulded gasket again if sump (top section) was previously fitted with such a gasket.***

Note

Renew gaskets, seals and O-rings.

Protected by copyright. Copying for private or commercial purposes, in part or in whole, is not permitted unless authorised by AUDI AG. AUDI AG does not guarantee or accept any liability with respect to the correctness of information in this document. Copyright by AUDI AG.

– Clean sealing surfaces.
– When positioning sump (top section), insert dipstick guide tube in hole.
– Fit sump (top section) and tighten all bolts securing sump (top section) to cylinder block initially to 5 Nm in diagonal sequence.
– Tighten bolts securing sump (top section) to gearbox.

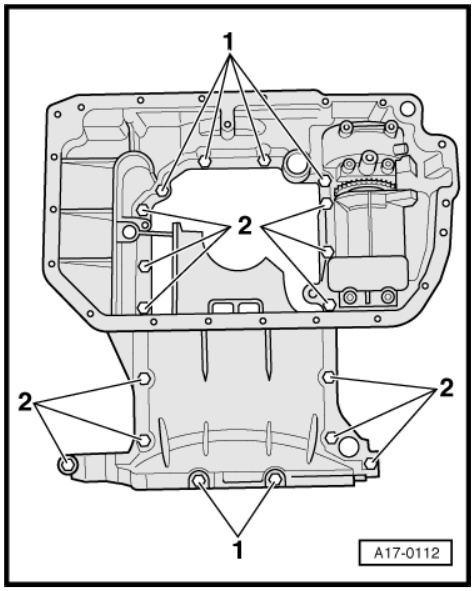

– Tighten bolts securing sump (top section) to cylinder block diagonally:
– Tighten bolts -1-.
– Tighten bolts -2-.
– Install subframe; observe tightening sequence ⇒ Rep. Gr. 40 .
– Install sump (bottom section) ⇒ page 145 .
– Install alternator and starter ⇒ Rep. Gr. 27 .
– Allow stop for torque reaction support to rest on rubber buffer for torque reaction support under its own weight, and tighten bolts to 55 Nm.
– Install poly V-belt for power steering pump, alternator and viscous fan ⇒ page 31 .
– Fill up with engine oil and check engine oil level ⇒ Maintenance ; Booklet 403 .
– Fill up with coolant ⇒ page 179 .
– Observe notes on procedures required after connecting battery ⇒ Rep. Gr. 27 .

Tightening torques

Component		Nm
Sump (top section) to	Cylinder block	13
	Sealing flanges (front and rear)	10
	Gearbox	45
Balance shaft assembly to sump (top section)		22
Gearbox mounting to subframe		40
Engine mounting to subframe		40
Damper weight to subframe		23
Torque reaction support to top section of sump		45
Coolant drain pipe to sump		10
Stop for torque reaction support to lock carrier		55
Bracket for air conditioner compressor to:	Sump (top section)	22
	Bracket for power steering pump and oil cooler	22
Air conditioner compressor to bracket		22

1.8 Installing sump (top section) - engines with liquid gasket

Special tools and workshop equipment required

- Electric drill with plastic brush attachment
- Safety goggles
- Sealant ⇒ Electronic parts catalogue

Procedure

Installation is carried out in the reverse order; note the following:

Protected by copyright. Copying for private or commercial purposes, in part or in whole, is not permitted unless authorised by AUDI AG. AUDI AG does not guarantee or accept any liability with respect to the correctness of information in this document. Copyright by AUDI AG.

Caution

Risk of leaks.

- *It is essential to use a liquid gasket again if sump (bottom section) was previously fitted with such a gasket.*

Note

Renew gaskets, seals and O-rings.

– Remove remaining sealant on sump (top section) and cylinder block using rotating plastic brush or similar.

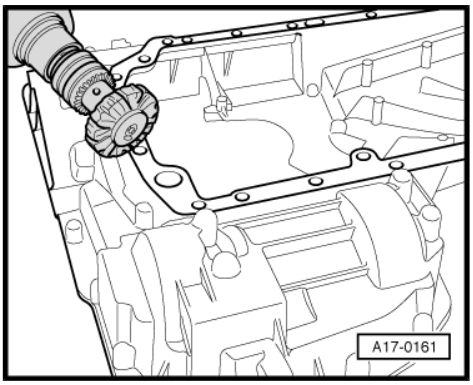

WARNING

Protect eyes against injuries.

- *Wear safety goggles.*

– Clean sealing surfaces; they must be free of oil and grease.

Note

Note the use-by date of the sealant.

Protected by copyright. Copying for private or commercial purposes, in part or in whole, is permitted unless authorised by AUDI AG. AUDI AG does not guarantee or accept any liability with respect to the correctness of information in this document. Copyright by AUDI AG

– Cut off nozzle of tube at front marking (nozzle ∅ approx. 3 mm).

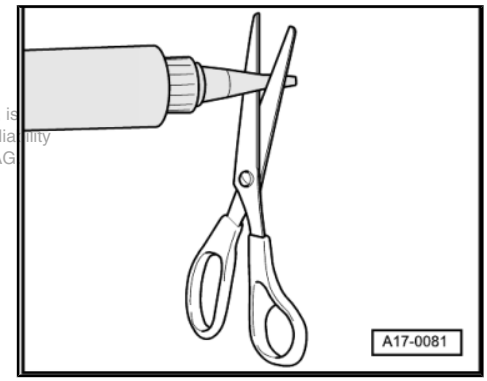

Caution

Make sure lubrication system is not clogged by excess sealant.

- *The bead of sealant must not be thicker than specified.*

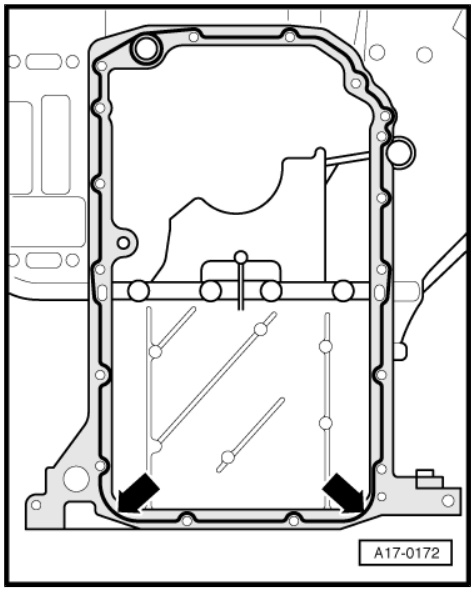

– Apply bead of sealant -arrows- onto clean sealing surface of sump (top section) as shown in illustration.

• Thickness of sealant bead: 2 ... 3 mm.

Note

- *Take particular care when applying sealant bead in area of sealing flange (gearbox end).*
- *The sump (top section) must be installed within 5 minutes after applying the sealant.*

– When positioning sump (top section), insert dipstick guide tube in hole.

– Fit sump (top section) and tighten all bolts securing sump (top section) to cylinder block initially to 5 Nm in diagonal sequence.

– Tighten bolts securing sump (top section) to gearbox.

Protected by copyright. Copying for private or commercial purposes, in part or in whole, is not permitted unless authorised by AUDI AG. AUDI AG does not guarantee or accept any liability with respect to the correctness of information in this document. Copyright by AUDI AG.

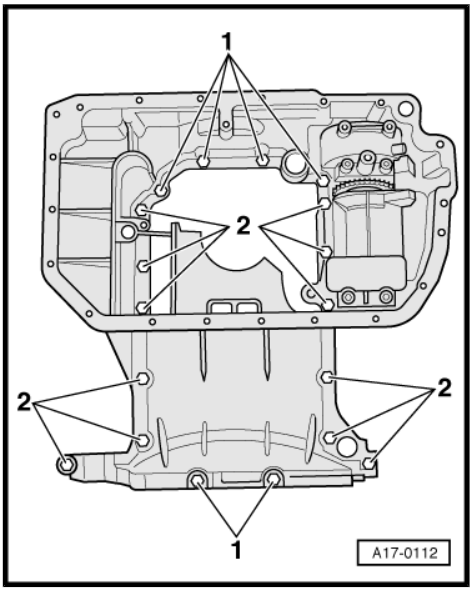

- Tighten bolts -1- and -2- securing sump (top section) to cylinder block in diagonal sequence.
- Install subframe; observe tightening sequence ⇒ Rep. Gr. 40 .
- Install oil pump ⇒ page 147 .
- Install sump (bottom section) ⇒ page 146 .
- Install alternator and starter ⇒ Rep. Gr. 27 .
- Allow stop for torque reaction support to rest on rubber buffer for torque reaction support under its own weight, and tighten bolts to 55 Nm.
- Install poly V-belt for power steering pump, alternator and viscous fan ⇒ page 31 .
- Fill up with engine oil and check engine oil level ⇒ Maintenance ; Booklet 403 .
- Fill up with coolant ⇒ page 179 .
- Observe notes on procedures required after connecting battery ⇒ Rep. Gr. 27 .

Tightening torques

Component		Nm
Sump (top section) to	Cylinder block, sealing flanges	16
	Gearbox	45
Balance shaft assembly to sump (top section)		22
Torque reaction support to top section of sump		45
Gearbox mounting to subframe		40
Engine mounting to subframe		40
Damper weight to subframe		23
Coolant drain pipe to sump		10
Stop for torque reaction support to lock carrier		55
Bracket for air conditioner compressor to:	Sump (top section)	22
	Bracket for power steering pump and oil cooler	22
Air conditioner compressor to bracket		22

Protected by copyright. Copying for private or commercial purposes, in part or in whole, is not permitted unless authorised by AUDI AG. AUDI AG does not guarantee or accept any liability with respect to the correctness of information in this document. Copyright by AUDI AG.

1.9 Oil filter bracket, oil filter - exploded view

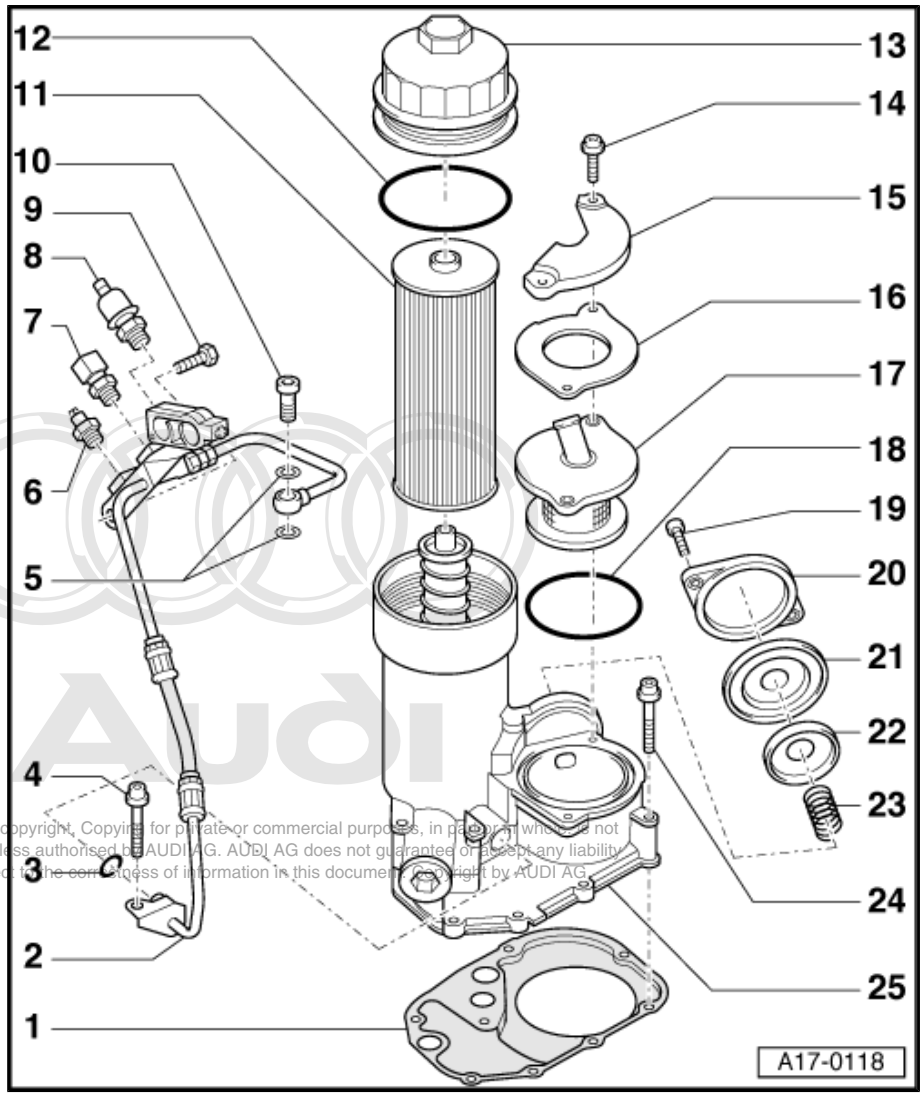

Protected by copyright. Copying for private or commercial purposes, in part or in whole, is not permitted unless authorised by AUDI AG. AUDI AG does not guarantee or accept any liability with respect to the correctness of information in this document. Copyright by AUDI AG.

1 - Gasket
- ❑ Renew

2 - Oil supply pipe
- ❑ To turbocharger

3 - O-ring
- ❑ Renew

4 - Bolt
- ❑ 10 Nm

5 - Seals
- ❑ Renew

6 - Screw plug
- ❑ Renew seal
- ❑ 15 Nm

7 - Gearbox oil temperature sender -G93-
- ❑ 15 Nm

8 - Oil pressure switch -F1-
- ❑ 1.9 bar, grey
- ❑ Checking ⇒ page 174
- ❑ Renew seal
- ❑ Tighten to 25 Nm

9 - Bolt
- ❑ 22 Nm

10 - Banjo bolt
- ❑ 15 Nm

11 - Oil filter element
- ❑ Removing and installing ⇒ Maintenance ; Booklet 403

12 - O-ring
- ❑ Renew

13 - Sealing cap
- ❑ Tighten to 25 Nm

14 - Bolt
- ❑ 10 Nm

15 - Heat shield

16 - Retaining ring

17 - Connecting piece with oil separator
- ❑ For crankcase breather
- ❑ Clean strainer
- ❑ Removing and installing ⇒ page 167

18 - Seal
- ❑ Renew

19 - Bolt
- ❑ 10 Nm

20 - Cover
- ❑ For pressure control valve

21 - Diaphragm
- ❑ For pressure control valve

22 - Pressure plate
- ❑ For pressure control valve

23 - Spring
- ❑ For pressure control valve

24 - Bolt
- ❑ Tighten in diagonal sequence
- ❑ 10 Nm

25 - Oil filter bracket
- ❑ With crankcase breather
- ❑ With pressure control valve for crankcase breather
- ❑ With filter bypass valve, 2.5 bar
- ❑ Check that guide tube for oil filter element is firmly seated
- ❑ Removing and installing ⇒ page 170

1.10 Removing and installing connecting piece with oil separator

Special tools and workshop equipment required

- ♦ Ring spanner -3035-

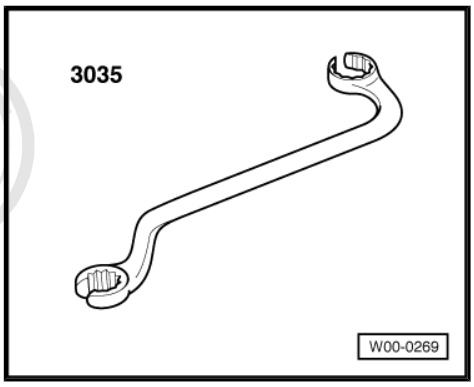

- ♦ Torque wrench -V.A.G 1331- with ratchet -V.A.G 1331/1-

Protected by copyright. Copying for private or commercial purposes, in part or in whole, is not permitted unless authorised by AUDI AG. AUDI AG does not guarantee or accept any liability with respect to the correctness of information in this document. Copyright by AUDI AG.

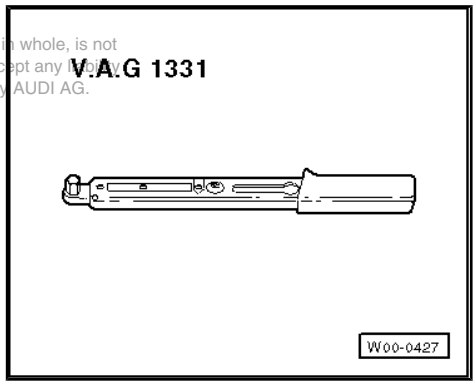

♦ Tool insert AF 17 -V.A.G 1331/6-

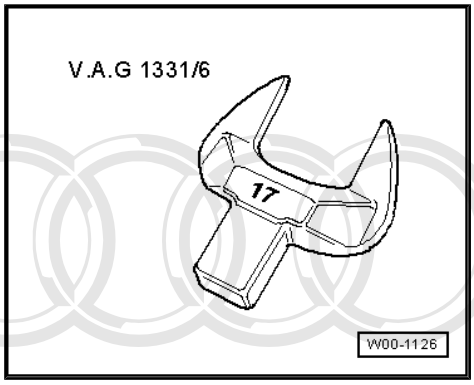

♦ Socket -T40055-

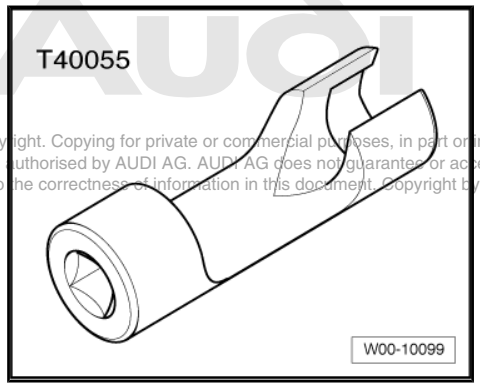

Protected by copyright. Copying for private or commercial purposes, in part or in whole, is not permitted unless authorised by AUDI AG. AUDI AG does not guarantee or accept any liability with respect to the correctness of information in this document. Copyright by AUDI AG.

Removing

– Detach caps on engine cover panel.
– Unbolt and remove engine cover panel -arrows-.
– Mark injector pipes according to cylinder (e.g. with felt-tip pen).
– Disconnect injector pipes one by one with ring spanner -3035- .

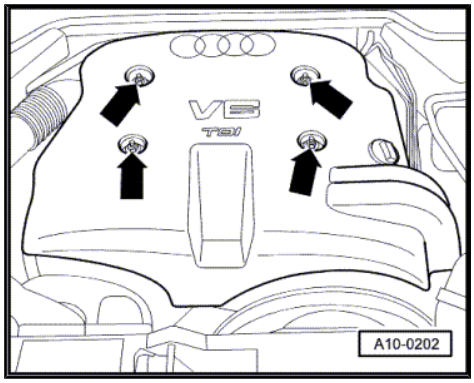

– Remove heat shield above turbocharger -arrows-.

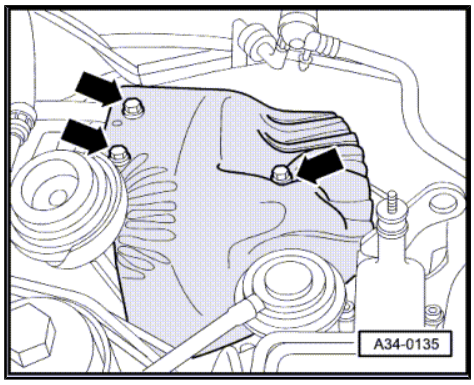

– Unscrew bolt (left-side) on mechanical exhaust gas recirculation valve -2-.
– Unscrew nuts -1- and -3-.
– Take out mechanical exhaust gas recirculation valve with exhaust gas recirculation pipes.

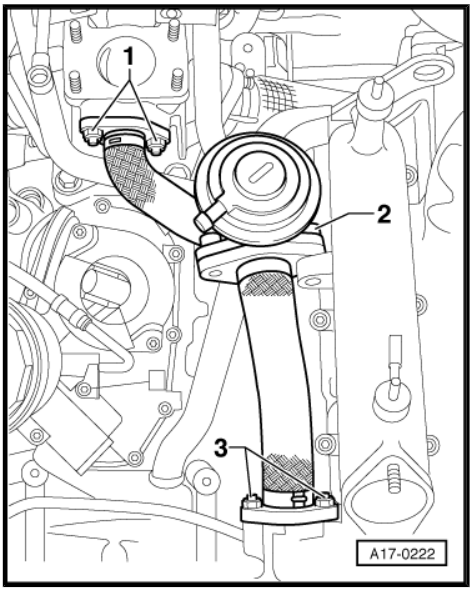

– Remove hose -1- from connecting piece with oil separator.
– Unscrew bolts -2- and remove connecting piece with oil separator.

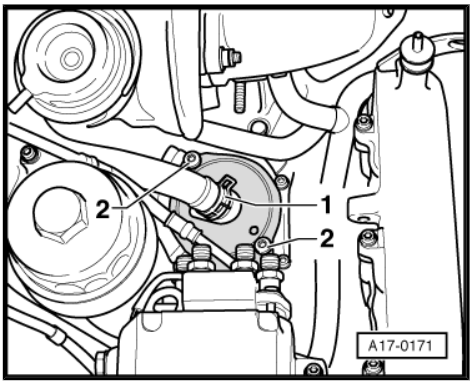

Installing

Installation is carried out in the reverse order; note the following:

Note

Renew gaskets, seals and O-rings.

– Install injector pipes one after the other (from bottom to top).
• Ensure stress-free installation of injector pipes.

– Tighten with torque wrench -V.A.G 1331- , and tool insert AF 17 -V.A.G 1331/6- .

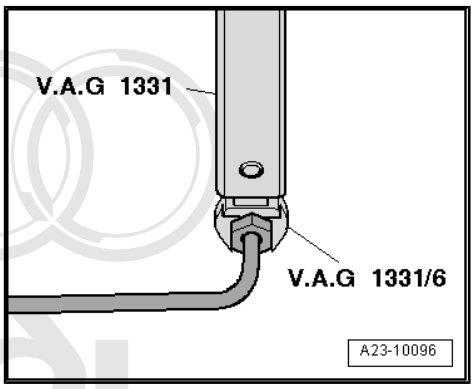

Protected by copyright. Copying for private or commercial purposes, in part or in whole, is not permitted unless authorised by AUDI AG. AUDI AG does not guarantee or accept any liability with respect to the correctness of information in this document. Copyright by AUDI AG.

– Tighten with torque wrench -V.A.G 1331- , ratchet -V.A.G 1331/1- and socket -T40055- .

– Check fuel system for leaks ⇒ page 4 .

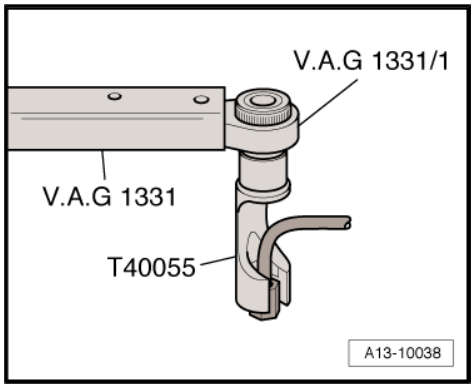

Tightening torques

Component		Nm
Connection		10
Mechanical exhaust gas recirculation valve to intake manifold		22
Pipe for exhaust gas recirculation to	Intermediate flange	22
	Intake manifold (front)	10
Injector pipes to	Injectors	30
	Injection pump	30

1.11 Removing and installing oil filter bracket

Removing

– Remove injection pump ⇒ Rep. Gr. 23 .

– Remove turbocharger ⇒ page 220 .

– Unscrew bolt (left-side) on mechanical exhaust gas recirculation valve -2-.

– Remove nuts -1-.

– Remove exhaust gas recirculation pipe -3-.

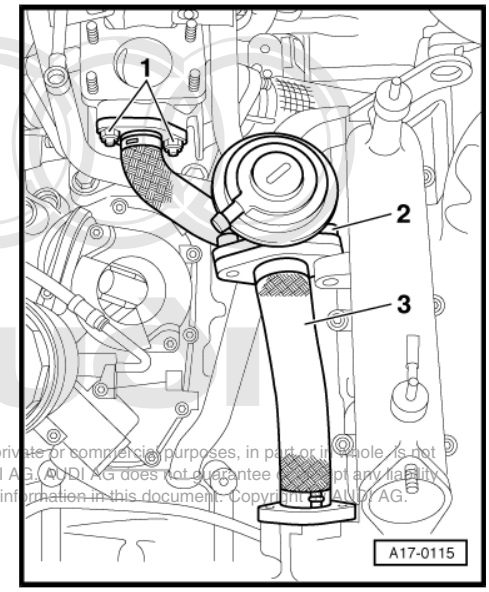

Protected by copyright. Copying for private or commercial purposes, in part or in whole, is not permitted unless authorised by AUDI AG. AUDI AG does not guarantee or accept any liability with respect to the correctness of information in this document. Copyright by AUDI AG.

– Remove bolt -2-.
– Detach oil pipe -1-.
– Remove bolts -arrows-.
– Remove oil filter bracket.

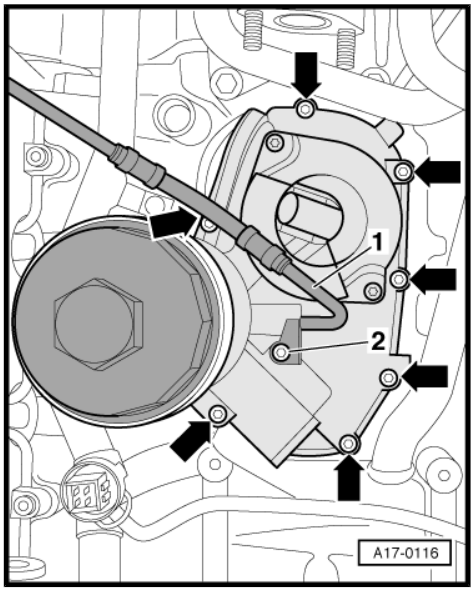

Installing

Installation is carried out in the reverse order; note the following:

Note

Renew gaskets, seals and O-rings.

– Install turbocharger ⇒ page 220 .
– Install injection pump ⇒ Rep. Gr. 23 .
– Dynamically check and adjust commencement of injection ⇒ Rep. Gr. 23 .

Tightening torques

Component		Nm
Oil filter bracket to cylinder block		10
Mechanical exhaust gas recirculation valve to intake manifold		22
Pipe for exhaust gas recirculation to	Intermediate flange	22
	Intake manifold (front)	10
Oil supply pipe to oil filter bracket		10

1.12 Renewing oil retention valves

Procedure

Note

In the event of irregular valve noise which disappears after a lengthy drive but repeatedly re-occurs when travelling short distances, the oil retention valves must be renewed.

– Remove oil filter bracket ⇒ page 170 .

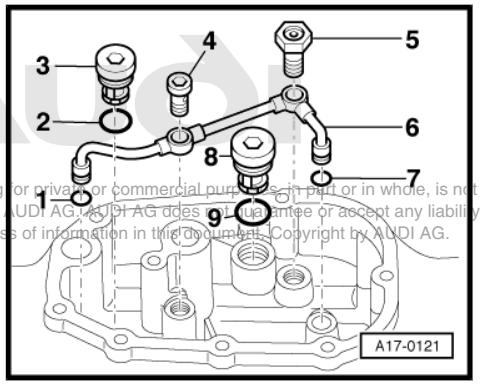

1 - O-ring - renew
2 - O-ring - renew
3 - Oil retention valve for cylinder head (left-side), 20 Nm
4 - Banjo bolt, 15 Nm
5 - Spray nozzle valve for piston cooling nozzles, 25 Nm
6 - Oil pipe
7 - O-ring - renew
8 - Oil retention valve for cylinder head (right-side), 20 Nm
9 - O-ring - renew

Protected by copyright. Copying for private or commercial purposes, in part or in whole, is not permitted unless authorised by AUDI AG. AUDI AG does not guarantee or accept any liability with respect to the correctness of information in this document. Copyright by AUDI AG.

1.13 Removing and installing oil cooler

Special tools and workshop equipment required

- Used oil collection and extraction unit -V.A.G 1782-

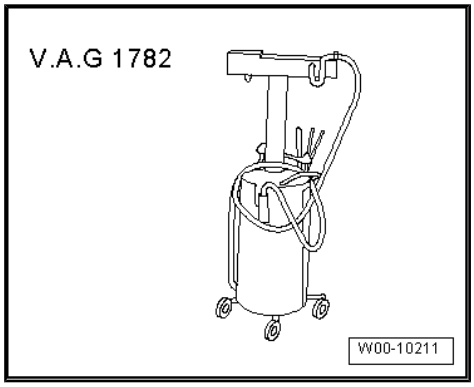

Removing

– Drain coolant ⇒ page 177 .

– Remove poly V-belt for air conditioner ⇒ page 35 .

> ⚠ **WARNING**
>
> *Risk of injury caused by refrigerant.*
>
> - *The air conditioner refrigerant circuit must not be opened.*

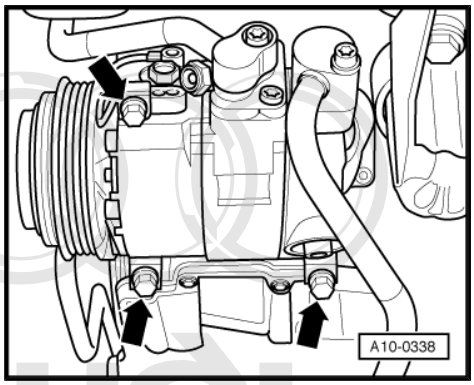

– Unbolt air-conditioner compressor from bracket -arrows-.

> ⚠ **Caution**
>
> *Danger of damage to refrigerant lines and hoses.*
>
> - *Do NOT stretch, kink or bend refrigerant lines and hoses.*

Protected by copyright. Copying for private or commercial purposes, in part or in whole, is not permitted unless authorised by AUDI AG. AUDI AG does not guarantee or accept any liability with respect to the correctness of information in this document. Copyright by AUDI AG.

– Tie air conditioner compressor up to side at body longitudinal member (leave hoses connected).

– Unbolt bracket for A/C compressor -arrows-.

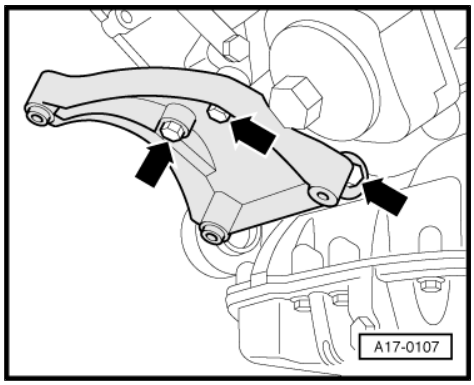

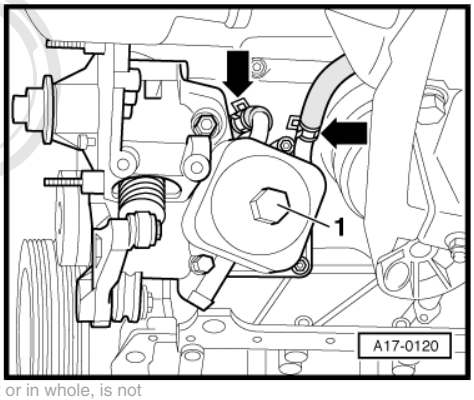

– Slacken hose clips -arrows- and push clips back along hoses.
– Place used oil collection and extraction unit -V.A.G 1782- under engine.
– Detach rear hose from oil cooler.
– Unfasten bolted joint -1- and detach oil cooler.

Note

Caution - oil and coolant will come out.

Installing

Protected by copyright. Copying for private or commercial purposes, in part or in whole, is not permitted unless authorised by AUDI AG. AUDI AG does not guarantee or accept any liability with respect to the correctness of information. Copyright by AUDI AG.

Installation is carried out in the reverse order, note the following:

Note

- *Renew seals and gaskets.*
- *Secure all hose connections with the correct type of hose clips (same as original equipment) ⇒ Electronic parts catalogue .*

– Install poly V-belt for air conditioner ⇒ page 35 .
– Fill up with coolant ⇒ page 179 .
– Check engine oil level ⇒ Maintenance ; Booklet 403 .

Tightening torques

Component		Nm
Bracket for air conditioner compressor to:	Sump (top section)	22
	Bracket for power steering pump and oil cooler	22
Air conditioner compressor to bracket		22
Oil cooler to bracket for power steering pump and oil cooler		25

2 Engine oil

Refer to ⇒ Maintenance tables for engine oil capacity, oil specifications and viscosity grades.

2.1 Checking engine oil level

Check engine oil level ⇒ Maintenance ; Booklet 403 .

2.2 Checking oil pressure and oil pressure switch

Special tools and workshop equipment required

- Oil pressure tester - V.A.G 1342-
- Voltage tester -V.A.G 1527 B-
- Auxiliary measuring set - V.A.G 1594 C-

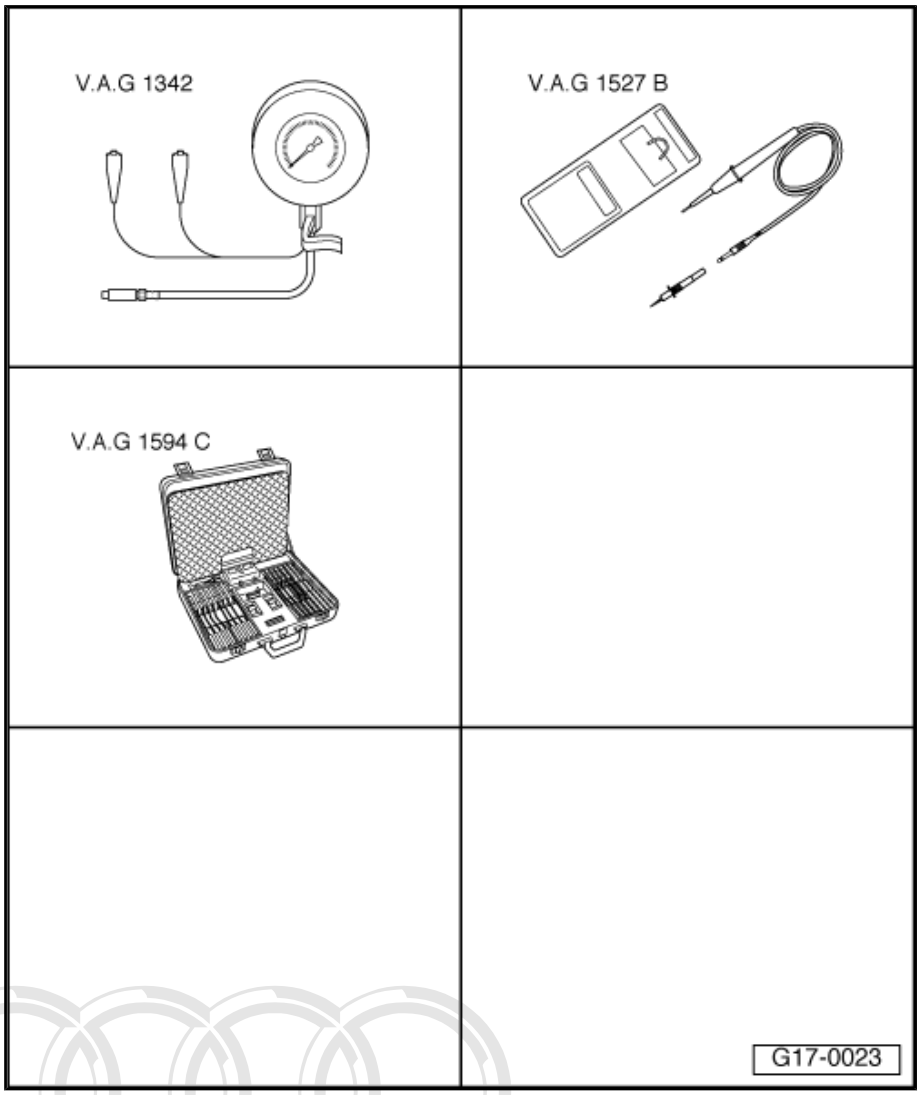

Procedure

- Oil level OK
- On vehicles with auto-check system, the “OK” display must light up (select symbol).
- Engine oil temperature approx. 80 °C.

Protected by copyright. Copying for private or commercial purposes, in part or in whole, is not permitted unless authorised by AUDI AG. AUDI AG does not guarantee or accept any liability with respect to the correctness of information in this document. Copyright by AUDI AG.

– Detach caps on engine cover panel.
– Unbolt and remove engine cover panel -arrows-.

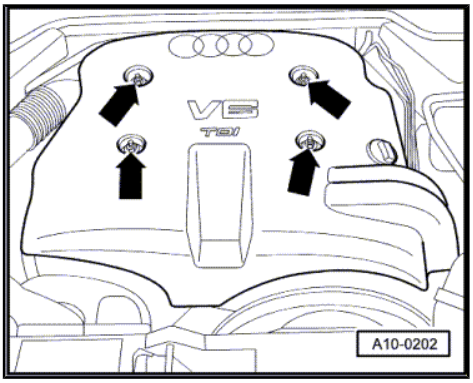

– Unplug electrical connector on oil pressure switch -F1- .
– Unscrew oil pressure switch.
– Connect oil pressure tester -V.A.G 1342- to threaded hole for oil pressure switch.
– Screw oil pressure switch -F1- -Item 2- into oil pressure tester -V.A.G 1342- .

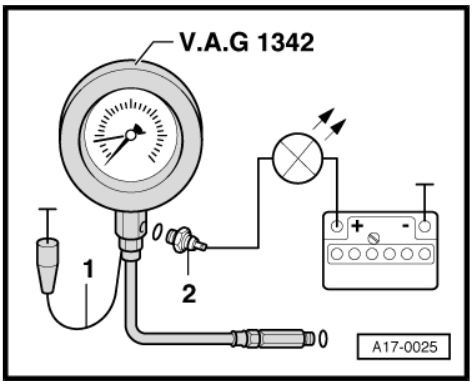

Checking oil pressure switch

– Connect brown wire -1- of oil pressure tester to earth (–).
– Connect voltage tester -V.A.G 1527 B- with test leads from auxiliary measuring set -V.A.G 1594 C- to oil pressure switch and battery positive (+).

• LED should not light up.

If LED lights up now:

– Renew oil pressure switch.
– Start engine.

Note

Observe tester and LED while starting, as switching point of oil pressure switch may already be exceeded when starting.

• LED should light up at 0.75 ... 1.05 bar.

If LED does not light up:

– Renew oil pressure switch.

Checking oil pressure

– Start engine.

• Minimum oil pressure at idling speed: 0.8 bar
• Minimum oil pressure at 2000 rpm: 2.0 bar

Protected by copyright. Copying for private or commercial purposes, in part or in whole, is not permitted unless authorised by AUDI AG. AUDI AG does not guarantee or accept any liability with respect to the correctness of information in this document. Copyright by AUDI AG.

19 – Cooling

1 Cooling system

WARNING

Hot steam/hot coolant can escape - risk of scalding.

- *The cooling system is under pressure when the engine is hot.*
- *To allow pressure to dissipate, cover filler cap on expansion tank with cloth and open carefully.*

Note

- *The cooling system is under pressure when the engine is hot. If necessary, relieve pressure before commencing repair work.*
- *The arrow markings on coolant pipes and on ends of hoses must align.*

Protected by copyright. Copying for private or commercial purposes, in part or in whole, is not permitted unless authorised by AUDI AG. AUDI AG does not guarantee or accept any liability with respect to the correctness of information in this document. Copyright by AUDI AG.

1.1 Draining and filling cooling system

Special tools and workshop equipment required

- Adapter -V.A.G 1274/1- for cooling system tester -V.A.G 1274-
- Pipe for cooling system tester -V.A.G 1274/10-
- Hose clip pliers -V.A.G 1921-
- Cooling system charge unit -VAS 6096-
- Drip tray for workshop hoist -VAS 6208-
- Refractometer -T10007-

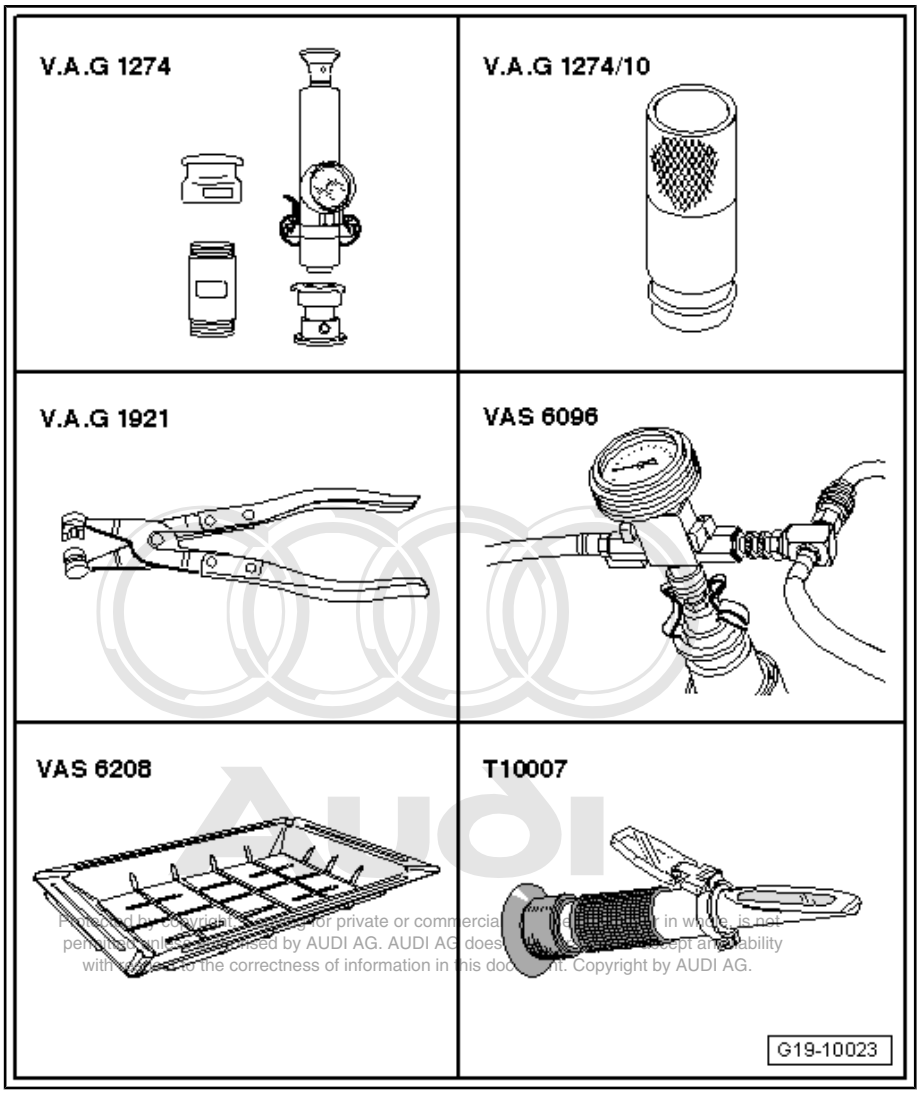

Reproduction of this document or parts thereof in any form or by any means, for private or commercial purposes and/or distribution in written or electronic form, is not permitted without the express consent authorised by AUDI AG. AUDI AG does not guarantee or accept any liability with respect to the correctness of information in this document. Copyright by AUDI AG.

Draining

Note

Collect drained coolant in a clean container for re-use or disposal.

WARNING

Hot steam/hot coolant can escape - risk of scalding.

- *The cooling system is under pressure when the engine is hot.*
- *To allow pressure to dissipate, cover filler cap on expansion tank with cloth and open carefully.*

– Open filler cap on expansion tank.

– Remove bolts -arrows- securing exhaust pipe for auxiliary/ supplementary heater to noise insulation.

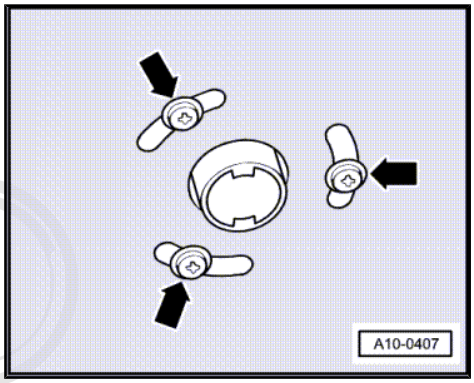

– Open quick-release fasteners -1- and remove noise insulation (front).

– Place drip tray for workshop hoist -VAS 6208- beneath engine.

Protected by copyright. Copying for private or commercial purposes, in part or whole, is not permitted unless authorised by AUDI AG. AUDI AG does not guarantee or accept any liability with respect to the correctness of information in this document. Copyright by AUDI AG.

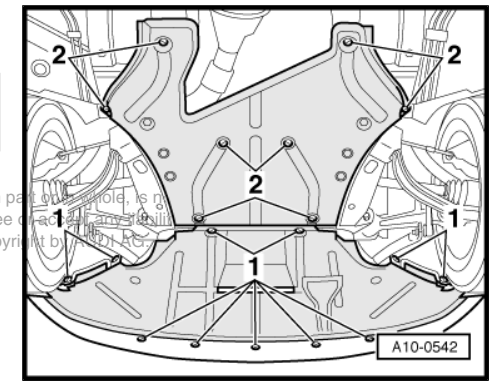

– Turn drain plug -arrow- on right of radiator anti-clockwise; attach auxiliary hose to connection if necessary.

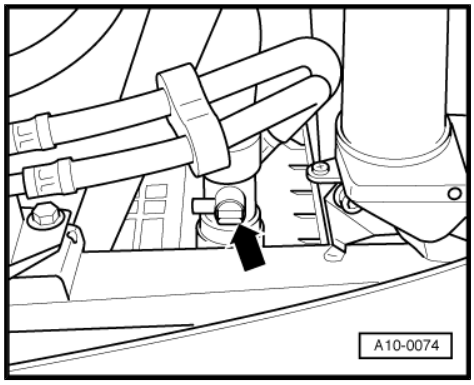

– Open drain plug -arrow- and drain off coolant.

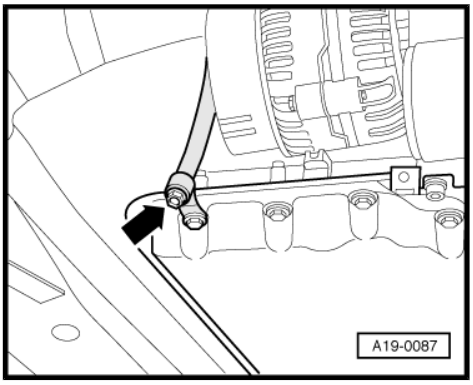

Filling

Note

- *The cooling system is filled all year round with a mixture of water and radiator antifreeze/anti-corrosion agent.*
- *Use only the radiator antifreeze/anti-corrosion agent approved for this engine ⇒ Electronic parts catalogue . Other coolant additives could seriously impair in particular the anticorrosion properties. The resulting damage could lead to loss of coolant and consequently to serious engine damage.*
- *The specified radiator antifreeze/anti-corrosion agent prevents frost and corrosion damage and stops scaling. Such additives also raise the boiling point of the coolant. For these reasons the cooling system must be filled all year round with the correct antifreeze and anticorrosion additive.*
- *Because of its high boiling point, the coolant improves engine reliability under heavy loads, particularly in countries with tropical climates.*
- *Frost protection is required down to about –25 °C (in countries with arctic climate: down to about –35 °C).*
- *The coolant concentration must not be reduced by adding water even in warmer seasons and in warmer countries. The antifreeze concentration must be at least 40 %.*

Protected by copyright. Copying for private or commercial purposes, in part or in whole, is not permitted unless authorised by AUDI AG. AUDI AG does not guarantee or accept any liability with respect to the correctness of information in this document. Copyright by AUDI AG.

- *If greater frost protection is required in very cold climates, the concentration of radiator antifreeze/anti-corrosion agent can be increased, but only up to 60% (this gives frost protection to about –40 °C). If the concentration exceeds 60%, frost protection decreases again and cooling efficiency is also impaired.*
- *Use only clean tap water for mixing coolant.*
- *Do not use drained coolant again if:*
- *radiator, heat exchanger for heater, cylinder head and cylinder head gasket or cylinder block have been renewed.*
- *the coolant is contaminated or dirty.*
- *Contaminated or dirty coolant must not be used again.*
- *For checking anti-freeze protection in cooling system, use refractometer -T10007- .*

– Close drain plug -arrow- on right of radiator.

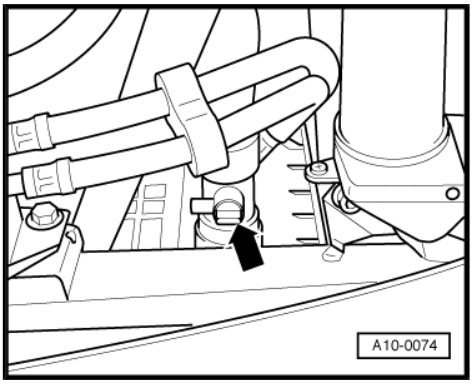

– Renew seal and tighten drain plug -arrow-.

– Fill reservoir of -VAS 6096- with at least 10 litres of premixed coolant (according to recommended ratio):

• Radiator antifreeze/anti-corrosion agent (40 %) and water (60 %) for frost protection to –25 °C

• Radiator antifreeze/anti-corrosion agent (50 %) and water (50 %) for frost protection to –35 °C

• Radiator antifreeze/anti-corrosion agent (60 %) and water (40 %) for frost protection to –40 °C

• Radiator antifreeze/anti-corrosion agent ⇒ Electronic parts catalogue

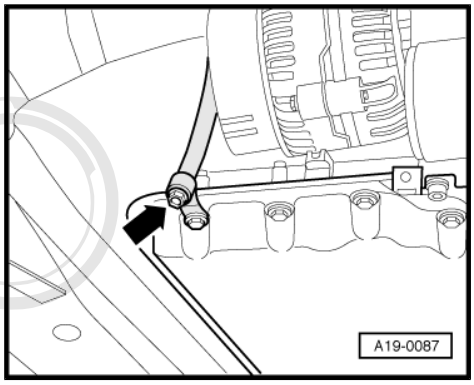

– Fit adapter -V.A.G 1274/1- onto coolant expansion tank.

– Attach pipe -V.A.G 1274/10- onto adapter.

Protected by copyright. Copying for private or commercial purposes, in part or in whole, is not permitted unless authorised by AUDI AG. AUDI AG does not guarantee or accept any liability with respect to the correctness of information in this document. Copyright by AUDI AG.

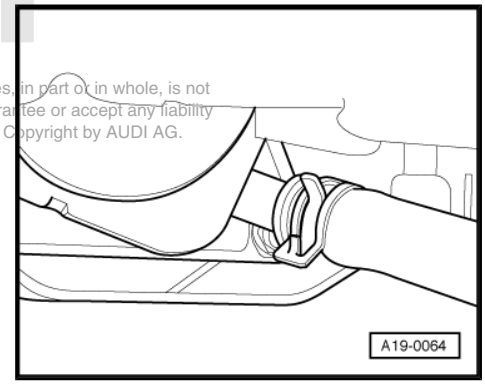

Note

To fill coolant expansion tank without using special tools, detach coolant expansion tank and raise it approx. 100 mm.

– Open bleeder screws -arrows- at heater supply and return pipes.

– Pour in coolant until it emerges at bleeder screws.

– Close bleeder screws.

– Close coolant expansion tank.

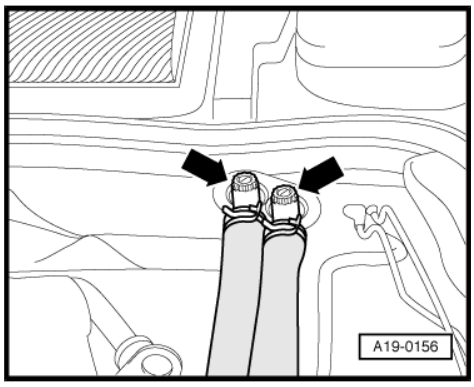

– Remove cover -3-.

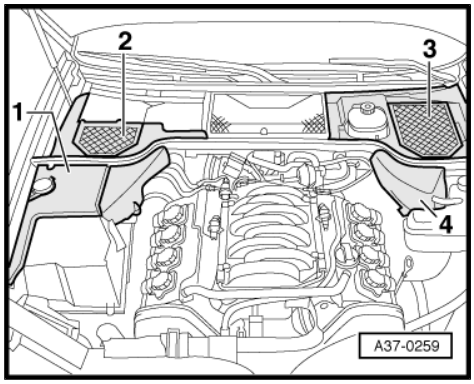

– Unplug 2-pin connector -arrow- to pump-valve unit.

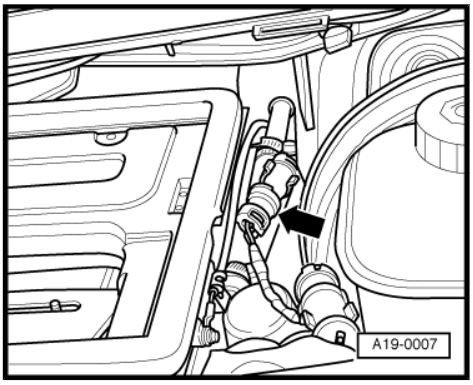

Note

- *The coolant circulation pump -V50- for pump-valve unit must not be started until coolant circuit has been bled.*
- *The pump-valve unit will be damaged if it is run dry.*

– On vehicles with auxiliary heater, switch heater on (for about 30 seconds) and then off again.

– Start engine.

– Set heater/air conditioner on both sides to “HI”.

– Switch off air conditioner compressor (press Econ button).

– Run engine for 3 minutes at 2000 rpm.

– Then allow engine to idle until bottom coolant hose at radiator becomes hot.

– Switch off ignition and allow engine to cool down.

– Check coolant level.

- The coolant level must be at the MAX marking when the engine is cold.
- The coolant level can be above the MAX marking when the engine is warm.

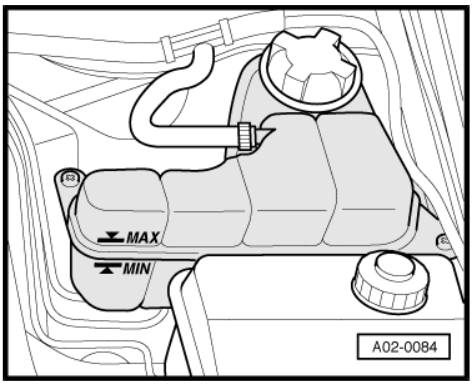

Tightening torque

Component	Nm
Drain plug to coolant drain pipe	10

Protected by copyright. Copying for private or commercial purposes, in part or in whole, is not permitted unless authorised by AUDI AG. AUDI AG does not guarantee or accept any liability with respect to the correctness of information in this document. Copyright by AUDI AG.

1.2 Coolant pump and thermostat - exploded view

1 - Bolt
- ❑ Apply locking fluid when installing; refer to ⇒ Electronic parts catalogue
- ❑ 10 Nm

2 - Bolt
- ❑ 10 Nm

3 - Screw plug
- ❑ 25 Nm

4 - Seal
- ❑ Renew

5 - Thermostat housing

6 - O-ring
- ❑ Renew

7 - Thermostat
- ❑ Removing and installing ⇒ page 183
- ❑ Checking ⇒ page 189

8 - Gasket
- ❑ Renew

9 - Coolant pump
- ❑ Removing and installing ⇒ page 182

10 - Bolt
- ❑ 10 Nm

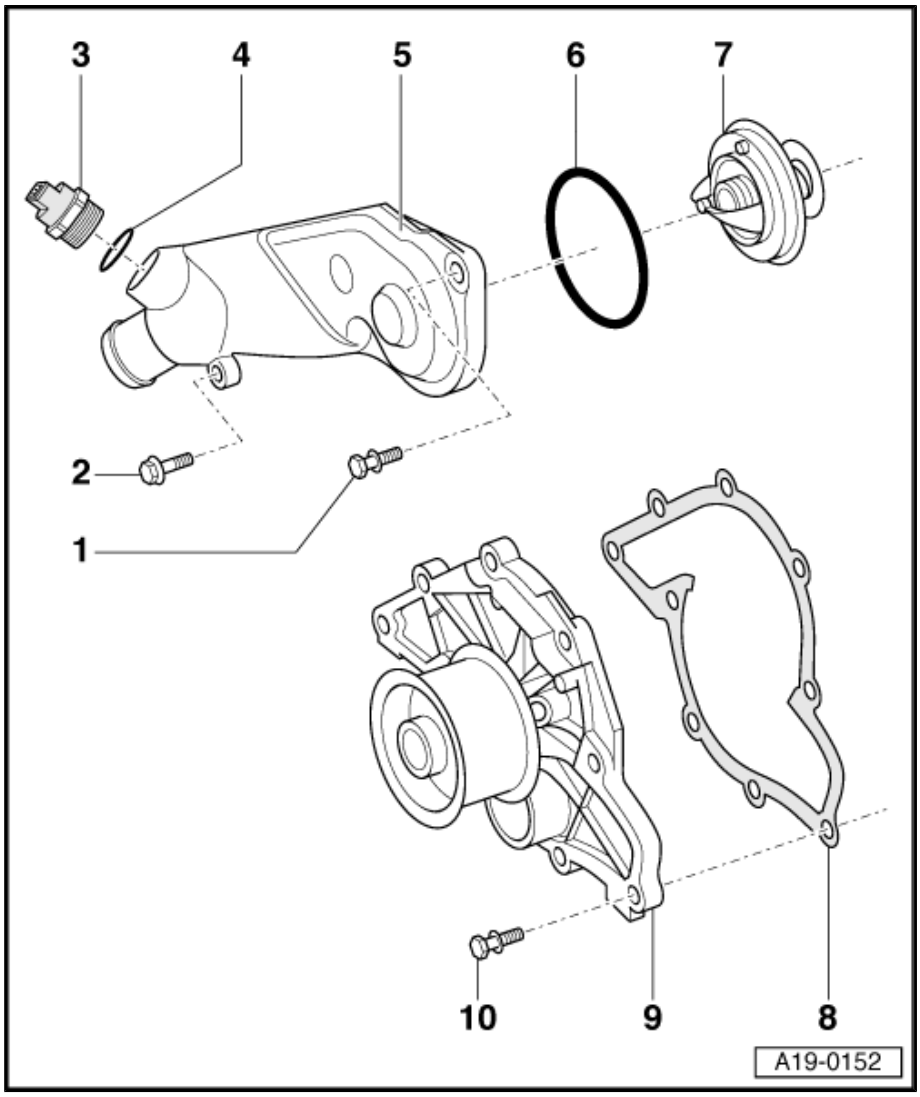

1.3 Removing and installing coolant pump

Removing

– Drain coolant ⇒ page 177 .

– Remove toothed belt ⇒ page 62 .

– Remove intake manifold (front section) ⇒ page 97 .

– Lift off centre section of rear toothed belt cover -2-.

– Unscrew bolts -right arrows- and detach toothed belt cover (rear left) -3-.

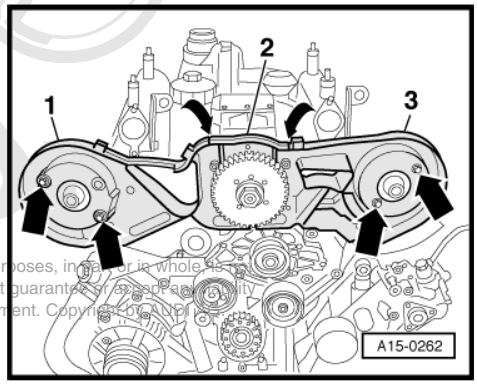

Protected by copyright. Copying for private or commercial purposes, in part or in whole is not permitted unless authorised by AUDI AG. AUDI AG does not guarantee or assume liability with respect to the correctness of information in this document. Copyright by AUDI AG.

– Unscrew bolts -arrows- and remove coolant pump.

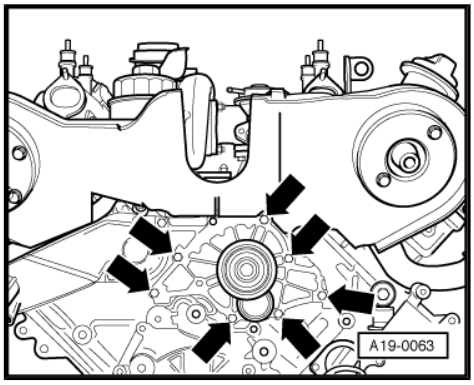

Installing

Installation is carried out in the reverse order; note the following:

Note

Renew gaskets and seals.

– Install toothed belt (adjust valve timing) ⇒ page 68 .

– Fill up with coolant ⇒ page 179 .

Tightening torques

Component		Nm
Coolant pump to cylinder block		10
Toothed belt cover (rear) to	Cylinder head	10
	Injection pump	10

1.4 Removing, installing and checking thermostat

Special tools and workshop equipment required

- Locking pin -T40011-
- Socket (22 mm) -3078-
- Locking pin -3242-
- Diesel injection pump locking pin -3359-
- Locking fluid ⇒ Electronic parts catalogue

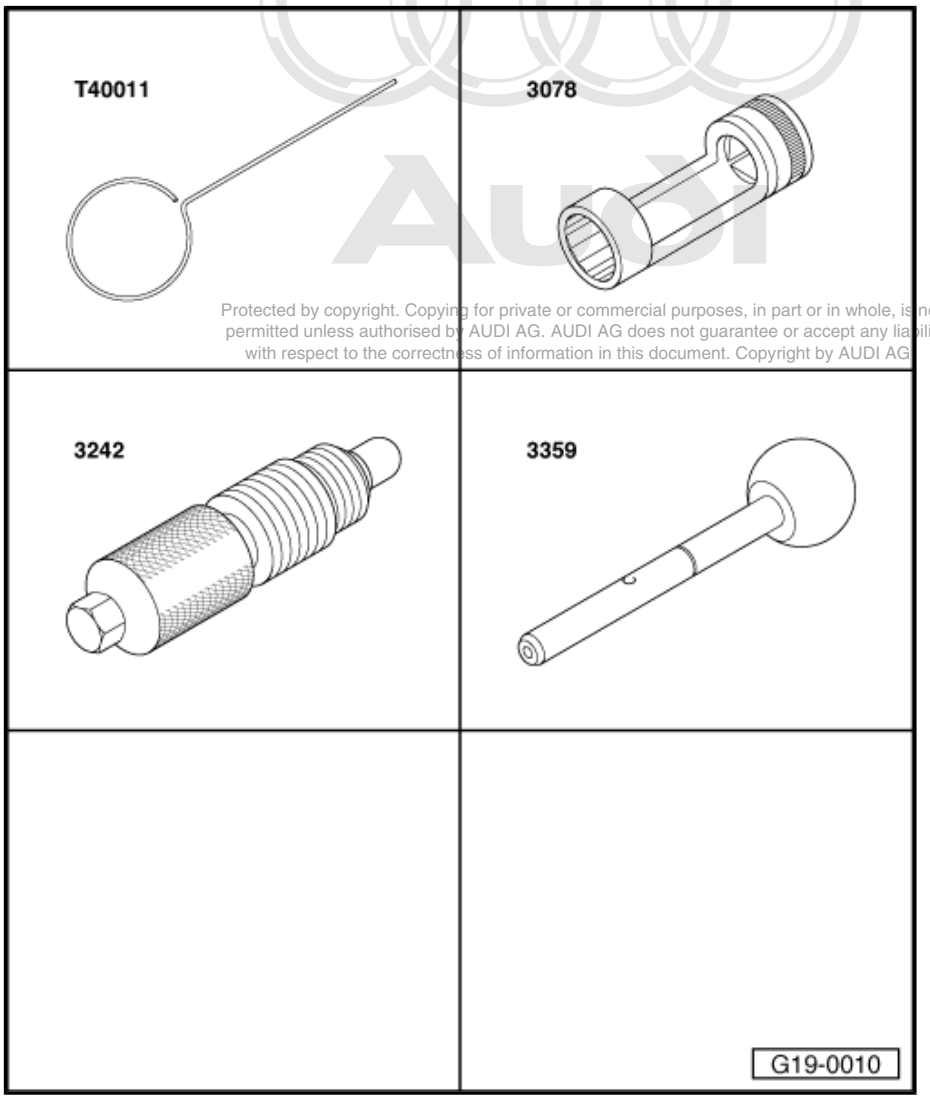

Protected by copyright. Copying for private or commercial purposes, in part or in whole, is not permitted unless authorised by AUDI AG. AUDI AG does not guarantee or accept any liability with respect to the correctness of information in this document. Copyright by AUDI AG

Removing

– Remove poly V-belt for power steering pump, alternator and viscous fan ⇒ page 31 .

– Remove securing bolts -arrows- for toothed belt cover (rear right).

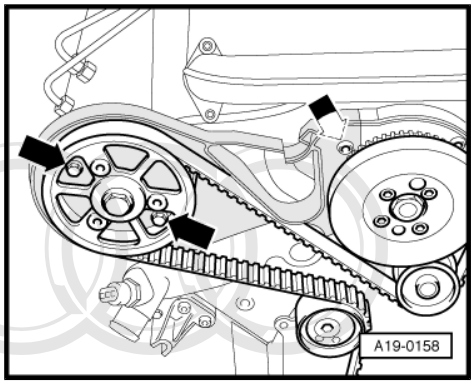

– Open oil filler cap.

– Turn engine until the marking “- OT -” (TDC) is visible on camshaft.

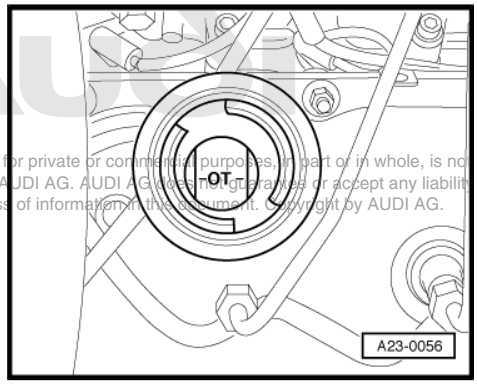

Protected by copyright. Copying for private or commercial purposes, in part or in whole, is not permitted unless authorised by AUDI AG. AUDI AG does not guarantee or accept any liability with respect to the correctness of information in this document. Copyright by AUDI AG.

Note

Turn over the engine at the central bolt on the crankshaft.

– Drain coolant ⇒ page 177 .

– Open quick-release fasteners -2- and remove rear noise insulation.

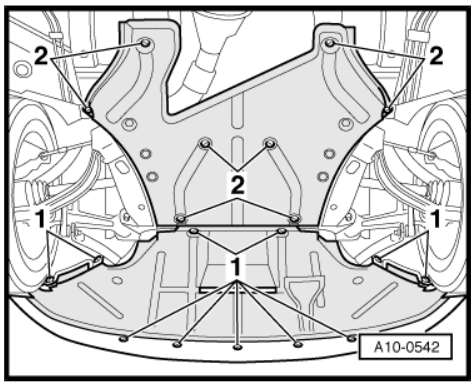

– Unbolt bracket for noise insulation -arrows-.

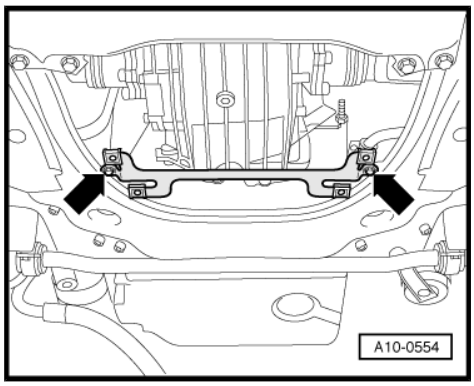

– Unscrew plug for TDC marking from cylinder block.

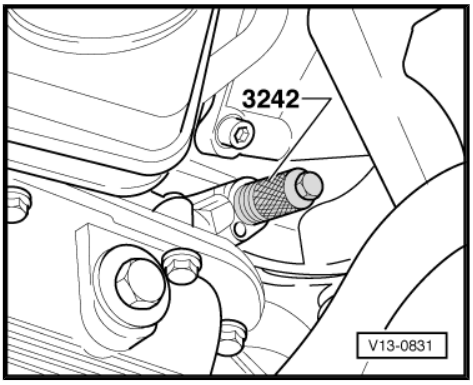

Note

There is a TDC drilling in the crankshaft directly behind the plug (it is possible to feel the hole).

WARNING

Injury risk.

- *Do not rotate the crankshaft while feeling for the TDC drilling with your finger.*

– Screw locking pin -3242- into threaded hole where plug has been removed, and tighten.

– Remove vibration damper on injection pump sprocket (bolts -1-).

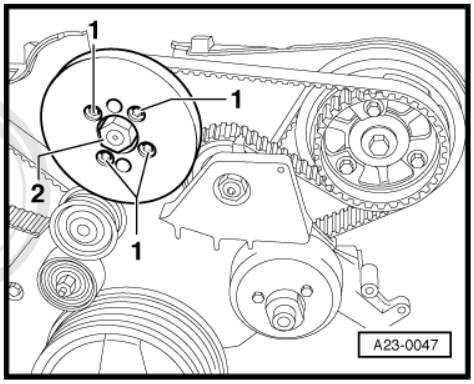

Caution

Do NOT loosen nut -2- for injection pump sprocket. Otherwise this would alter the basic setting of the injection pump. The setting cannot be re-adjusted with workshop equipment.

Protected by copyright. Copying for private or commercial purposes, in part or in whole, is not permitted unless authorised by AUDI AG. AUDI AG does not guarantee or accept any liability with respect to the correctness of information in this document. Copyright by AUDI AG.

Caution

If a used belt runs in the opposite direction when it is refitted, this can cause breakage.

- *Before removing, mark direction of rotation of toothed belt with chalk or felt-tipped pen for re-installation.*

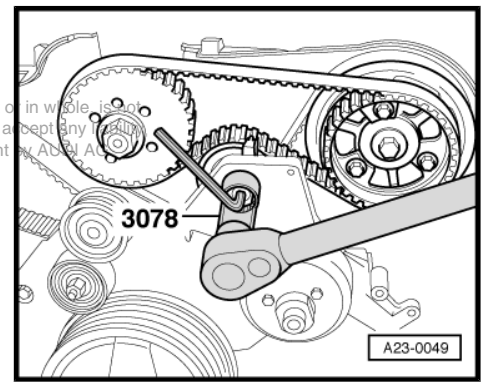

– Slacken toothed belt tensioner and take off toothed belt for injection pump.

– Remove 8 bolts -1- and detach vibration damper.

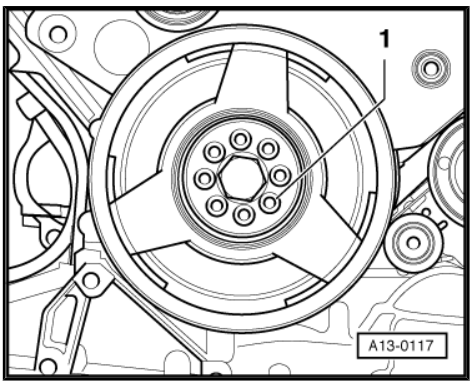

Note

Central bolt does not have to be loosened when removing vibration damper.

– Unbolt bottom section of toothed belt cover -4-.
– Unbolt viscous fan pulley.
– Remove bolts -1 ... 3- and detach bracket for viscous fan with idler rollers.

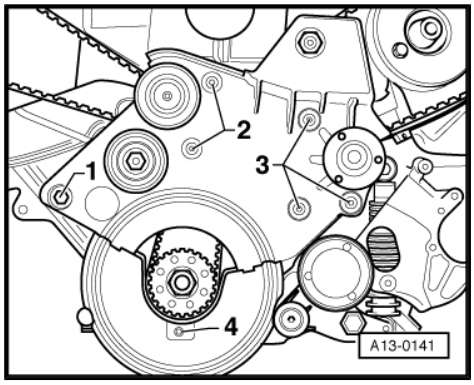

– Unbolt drive sprocket -1- for injection pump from camshaft sprocket -arrows-.

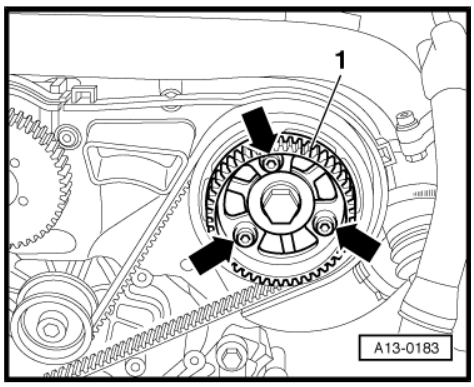

Note

Do not use camshaft holders -3458- as counter-hold tools.

– Turn toothed belt tensioning roller in direction of -arrow- using an 8 mm Allen key until tensioning lever of tensioner is compressed far enough to allow locking pin -T40011- to be inserted into the hole and the plunger.

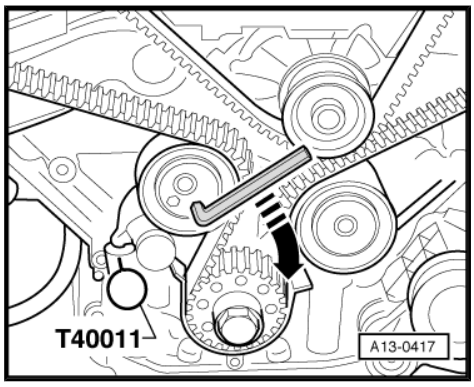

Note

The toothed belt tensioner is oil-damped and can therefore only be compressed slowly by applying constant pressure.

– Pull toothed belt forwards slightly on tensioning roller -arrow-.

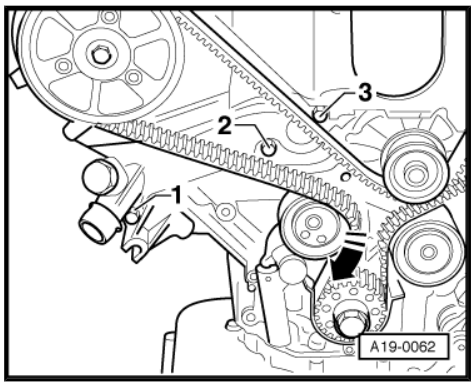

Caution

Timing must be re-adjusted if toothed belt has slipped off tensioning roller ⇒ page 68 .

– Unplug electrical connector for coolant temperature sender.
– Detach coolant hose from thermostat housing.
– Remove bolts -1 ... 3- and detach thermostat housing.
– Remove O-ring and thermostat.

Protected by copyright. Copying for private or commercial purposes, in part or in whole, is not permitted unless authorised by AUDI AG. AUDI AG does not guarantee or accept any liability with respect to the correctness of information in this document. Copyright by AUDI AG.

Installing

Installation is carried out in the reverse order; note the following:

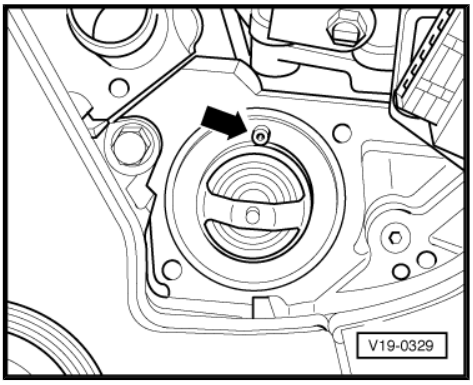

Note

Renew seals and O-rings.

– Install thermostat (note installation position):
- Vent valve -arrow- faces upwards.
- O-ring faces towards housing.

– Install thermostat housing.

– Apply locking fluid to bolts -2- and -3- before installing.

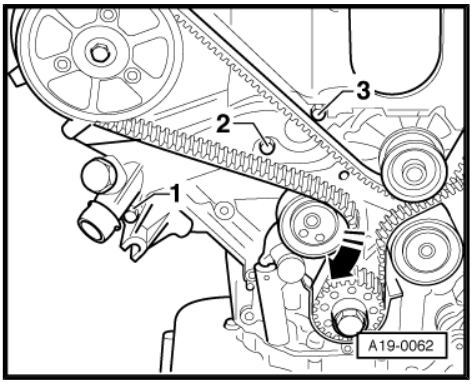

Caution

Timing must be re-adjusted if toothed belt has slipped off tensioning roller ***⇒ page 68*** ***.***

– Push toothed belt to rear.

– Slacken belt tensioner using 8 mm Allen key -arrow- and pull out locking pin -T40011- .

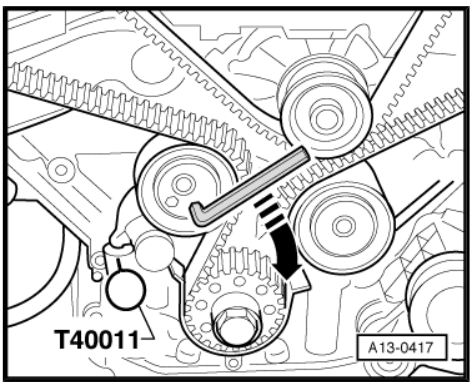

– Pre-tension toothed belt to 15 Nm by turning with torque wrench in direction of -arrow-.

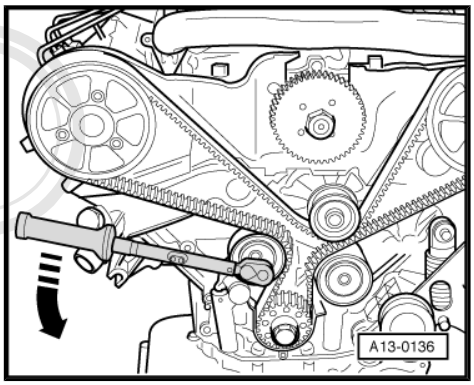

Protected by copyright. Copying for private or commercial purposes, in part or in whole, is not permitted unless authorised by AUDI AG. AUDI AG does not guarantee or accept any liability with respect to the correctness of information in this document. Copyright by AUDI AG.

– Install bracket for viscous fan:

1 - 45 Nm

2 - 10 Nm

3 - 22 Nm

4 - 10 Nm

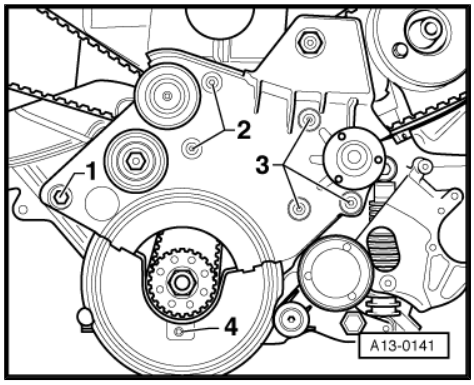

– Lock injection pump sprocket with diesel injection pump locking pin -3359- .

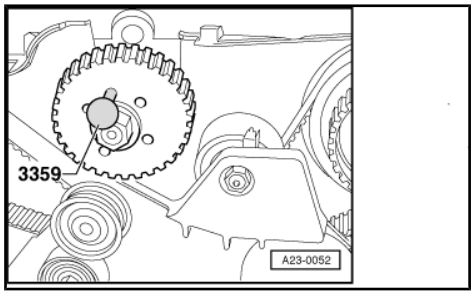

– Install drive sprocket for injection pump -1- so that it is aligned centrally in elongated holes.

– Tighten drive sprocket -arrows- until it is still just possible to turn it on the camshaft sprocket.

– Position toothed belt for injection pump. Pay attention to the direction of rotation as marked upon removal.

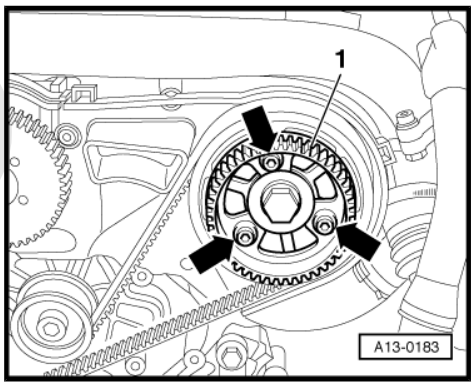

– Tension toothed belt. To do so, turn Allen key in anti-clockwise direction -arrow- until marks -1- coincide.

– Then tighten nut using socket (22 mm) -3078- .

Reproduction of this AUDI AG publication for any purpose, or commercial purposes, in part or in whole, is not permitted unless authorised by AUDI AG. AUDI AG does not guarantee or accept any liability with respect to the correctness of information in this document. Copyright by AUDI AG.

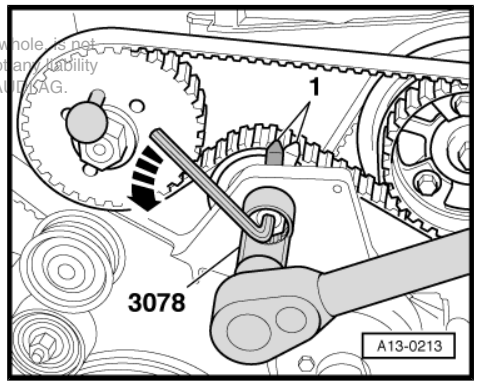

Note

Depending on version, pointer -1- may have no tip.

– Tighten bolts at camshaft sprocket.

– Remove diesel injection pump locking pin -3359- .

– Remove locking pin -3242- .

– Screw plug for the TDC mark into cylinder block with a new seal.

– Check tension of toothed belt for injection pump.

• Marks -1- and -2- must be opposite one another.

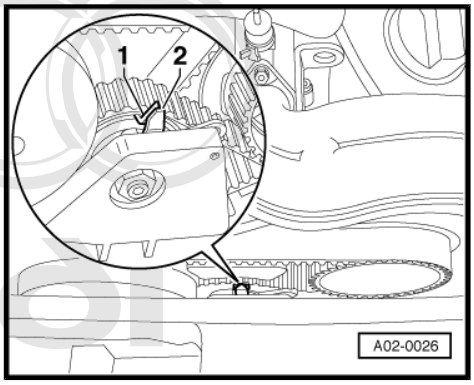

Protected by copyright. Copying for private or commercial purposes, in part or in whole, is not permitted unless authorized by AUDI AG. AUDI AG does not guarantee or accept any liability with respect to the correctness of information in this document. Copyright by AUDI AG.

– Fit vibration damper on injection pump sprocket (bolts -1-).

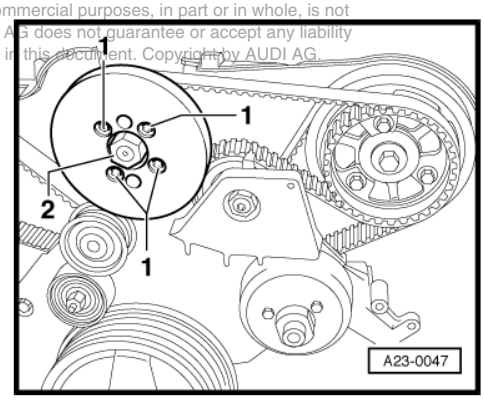

– Install vibration damper. In doing so, pay attention to locking lug -arrow- on toothed belt sprocket.

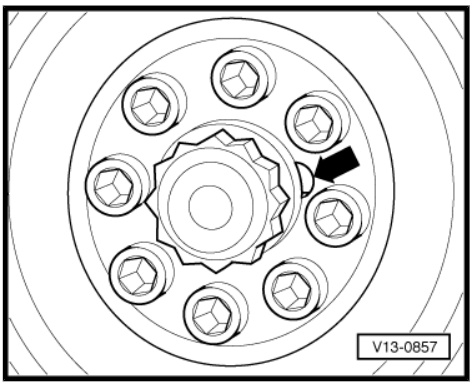

Remaining installation steps are carried out in reverse sequence; note the following:

– Install poly V-belt for power steering pump, alternator and viscous fan ⇒ page 31 .

– Fill up with coolant ⇒ page 179 .

– Dynamically check and adjust commencement of injection ⇒ Rep. Gr. 23 .

Tightening torques

Component	Nm
Thermostat housing to cylinder block	10
Vibration damper to injection pump sprocket	22
Drive sprocket for injection pump to camshaft	22
Vibration damper to crankshaft sprocket	22
Screw plug in cylinder block	10
Tensioning roller for injection-pump toothed belt to bracket for viscous fan	36
Viscous fan pulley to hub	10

1.5 Checking thermostat

– Heat removed thermostat in water bath.

Starts to open	Fully open	Opening travel
approx. 87 °C	approx. 102 °C [1]	at least 8 mm
• [1] Cannot be tested.		

1.6 Coolant pipes - exploded view

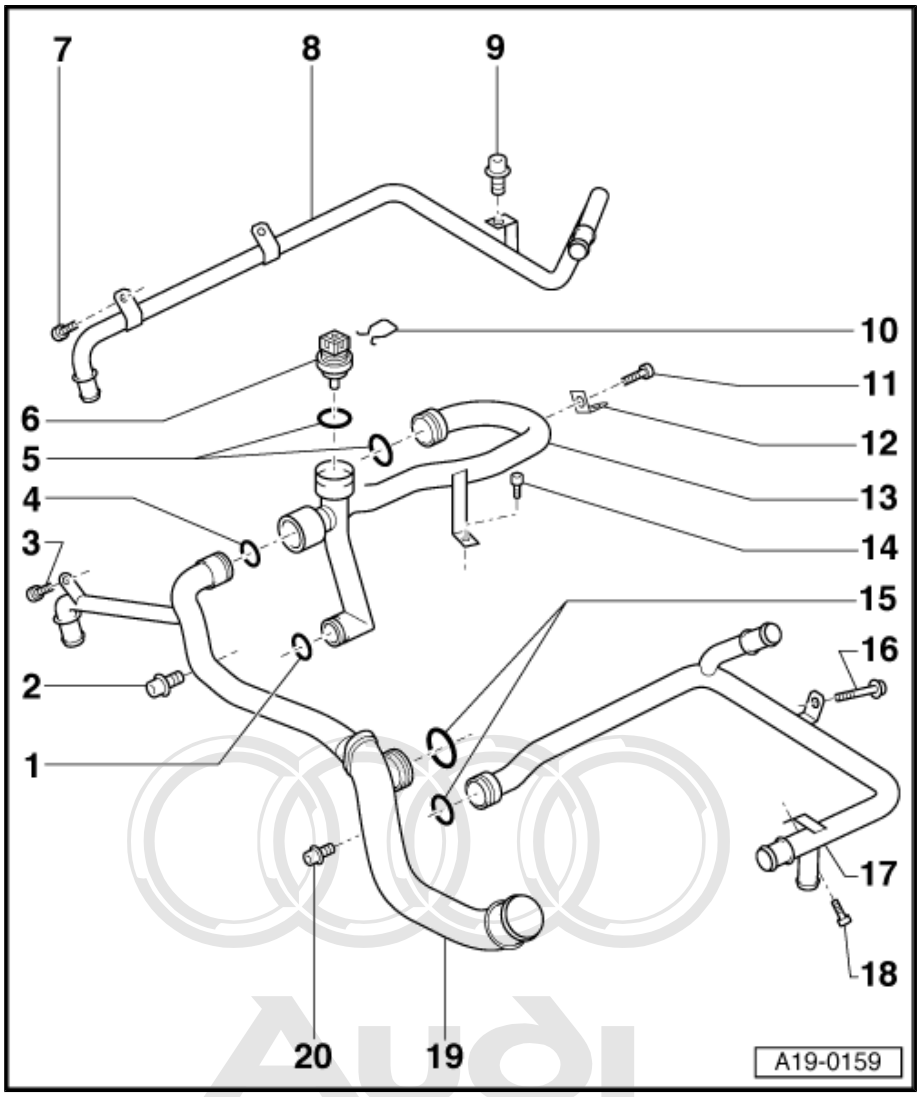

Protected by copyright. Copying for private or commercial purposes, in part or in whole, is not permitted unless authorised by AUDI AG. AUDI AG does not guarantee or accept any liability with respect to the correctness of information in this document. Copyright by AUDI AG.

1 - O-ring
- ❑ Renew

2 - Bolt
- ❑ 22 Nm

3 - Bolt
- ❑ 10 Nm

4 - O-ring
- ❑ Renew

5 - O-ring
- ❑ Renew

6 - Coolant temperature sender
- ❑ Coolant temperature display sender -G2- / coolant temperature sender -G62-

7 - Bolt
- ❑ 10 Nm

8 - Coolant pipe (right-side)
- ❑ Removing and installing ⇒ page 193

9 - Bolt
- ❑ 22 Nm

10 - Retaining clip

11 - Bolt
- ❑ 10 Nm

12 - Bracket

13 - Coolant pipe (centre)
- ❑ Removing and installing ⇒ page 195

14 - Bolt
- ❑ 10 Nm

15 - O-ring
- ❑ Renew

16 - Bolt
- ❑ 10 Nm

17 - Coolant pipe (left-side)
- ❑ Removing and installing ⇒ page 192

18 - Bolt
- ❑ 10 Nm

19 - Coolant pipe (front)
- ❑ Removing and installing ⇒ page 191

20 - Bolt
- ❑ 10 Nm

1.7 Removing and installing coolant pipe (front)

Removing

- Drain coolant ⇒ page 177 .
- Remove toothed belt ⇒ page 62 .
- Remove camshaft sprocket (right-side).
- Remove intake manifold (front section) ⇒ page 97 .
- Lift off centre section of rear toothed belt cover -2-.
- Unscrew bolts -arrows- and detach rear left toothed belt cover -3- and rear right toothed belt cover -1-.

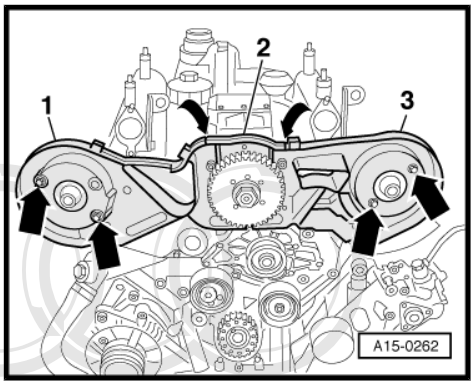

- Disconnect both coolant hoses -arrows-.
- Remove bolts -1 ... 3-.
- Pull off coolant pipe towards the front.

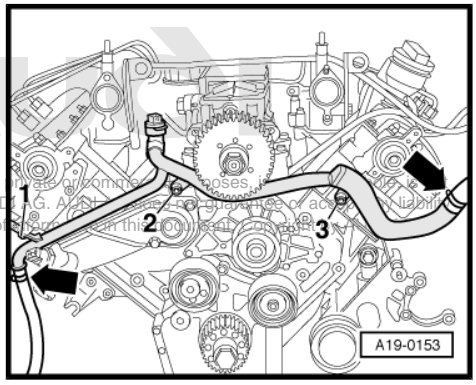

Installing

Installation is carried out in the reverse order; note the following:

Protected by copyright. Copying for private or commercial purposes, in part or in whole, is not permitted unless authorised by AUDI AG. AUDI AG does not guarantee or assume any liability with respect to the correctness of information in this document. Copyright by AUDI AG.

Note

Renew seals and O-rings.

- Before installing, clean and smoothen sealing surface for O-ring.
- Lubricate new O-ring with coolant and slide onto coolant pipe.
- Slide coolant pipe (front) into coolant pipe (right-side) and into bore in cylinder head.
- Install toothed belt (adjust valve timing) ⇒ page 68 .
- Fill up with coolant ⇒ page 179 .
- Dynamically check and adjust commencement of injection ⇒ Rep. Gr. 23 .

Tightening torques

Component		Nm
Front coolant pipe to:	Cylinder block	22
	Cylinder head	10
Toothed belt cover (rear) to	Cylinder head	10
	Injection pump	10

1.8 Removing and installing coolant pipe (left-side)

Removing

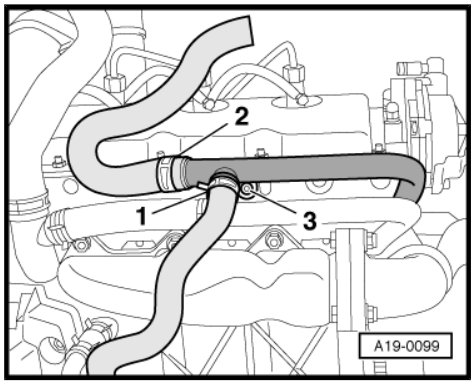

- Drain coolant ⇒ page 177 .
- Remove mechanical exhaust gas recirculation valve ⇒ page 268 .
- Disconnect coolant hoses -1- and -2- at coolant pipe (left-side).
- Remove bolt -3-.

Note

Illustration shows coolant pipe with engine removed.

- Detach coolant hose leading to heat exchanger for heater.
- Detach vacuum hose leading to exhauster pump.
- Unbolt heat shield (rear) from exhauster pump.
- Pull coolant pipe to rear out of cylinder block.
- Swivel left end of coolant pipe upwards and remove.

Installing

Installation is carried out in the reverse order; note the following:

Note

Protected by copyright. Copying for private or commercial purposes, in part or in whole, is not permitted unless authorised by AUDI AG. AUDI AG does not guarantee or accept any liability with respect to the correctness of information in this document. Copyright by AUDI AG.

Renew seals and O-rings.

- Before installing, clean and smoothen sealing surface for O-ring.
- Lubricate new O-ring with coolant and slide onto coolant pipe.
- Slide coolant pipe into bore in cylinder block.
- Install mechanical exhaust gas recirculation valve ⇒ page 268 .
- Fill up with coolant ⇒ page 179 .

Tightening torque

Component	Nm
Coolant pipe (left-side) to cylinder head	10

1.9 Removing and installing coolant pipe (right-side)

Removing

– Drain coolant ⇒ page 177 .

– Detach caps on engine cover panel.

– Unbolt and remove engine cover panel -arrows-.

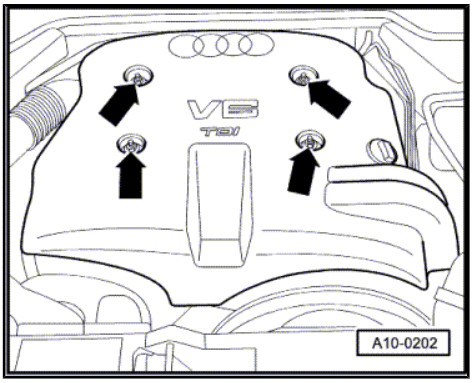

– Remove heat shield above turbocharger -arrows-.

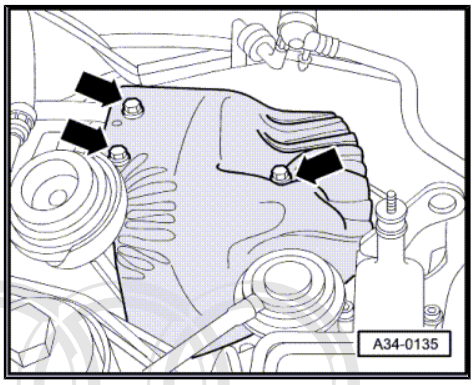

– Remove air ducts -1- and -2-.

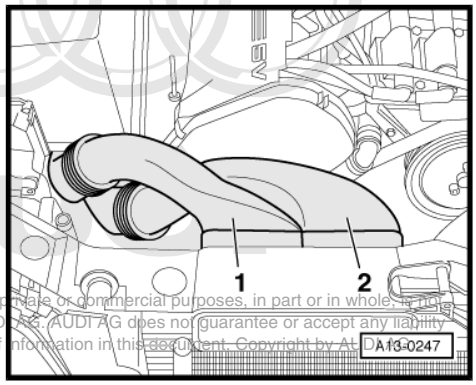

Protected by copyright. Copying for private or commercial purposes, in part or in whole, is not permitted unless authorised by AUDI AG. AUDI AG does not guarantee or accept any liability with respect to the correctness of information in this document. Copyright by AUDI AG.

– Remove air hose from air cleaner -arrows-.

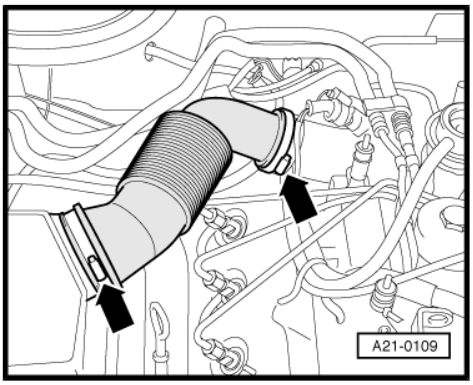

– Remove air intake pipe between turbocharger and charge air cooler -arrows-.

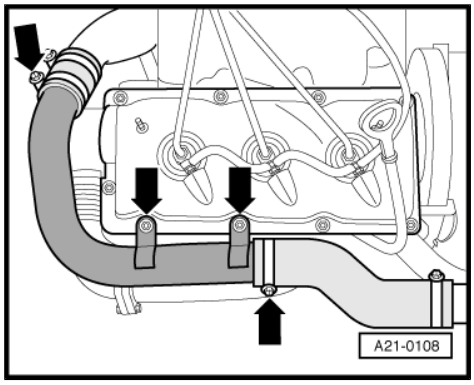

– Unplug electrical connectors -1 ... 4-.
– Disengage connector -3- from bracket.
– Slide charge pressure control solenoid valve -N75- and exhaust gas recirculation valve -N18- off bracket in direction of -arrow- and move clear.

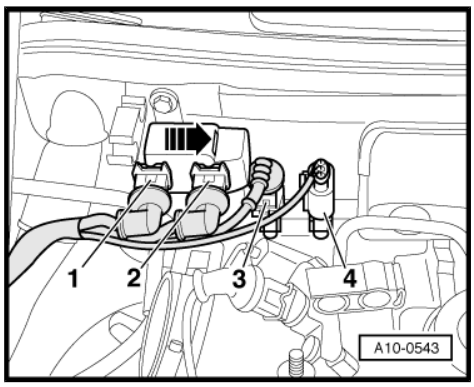

– Detach coolant hose (rear) -2- from coolant pipe.
– Disconnect coolant hose (front) leading to auxiliary/supplementary heater from coolant pipe.
– Unbolt coolant pipe from intermediate flange -1-.

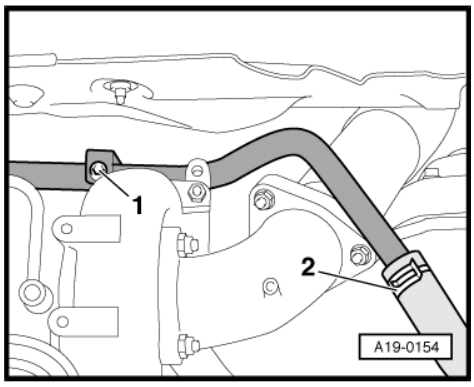

Protected by copyright. Copying for private or commercial purposes, in part or in whole, is not permitted unless authorised by AUDI AG. AUDI AG does not guarantee or accept any liability with respect to the correctness of information in this document. Copyright by AUDI AG.

– Remove coolant pipe from cylinder head -arrows-.
– Swivel left end of coolant pipe upwards.
– Slide coolant pipe towards right side and detach it by turning it upwards.

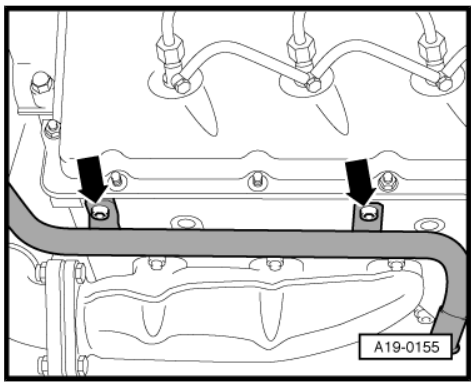

Installing

Installation is carried out in the reverse order; note the following:

– Fill up with coolant ⇒ page 179 .

Tightening torques

Component		Nm
Coolant pipe (right-side) to:	Intermediate flange	22
	Cylinder head	10
Air pipe to cylinder head		10
Heat shield to turbocharger		10

1.10 Removing and installing coolant pipe (centre)

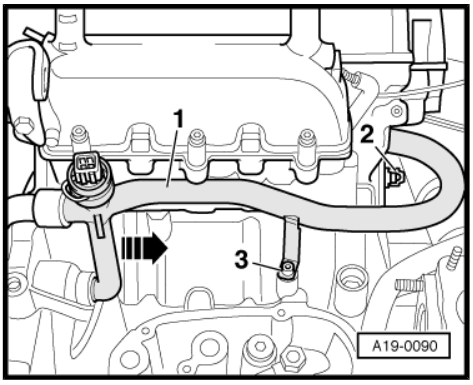

Removing

- Drain coolant ⇒ page 177 .
- Remove oil filter bracket ⇒ page 170 .
- Remove bolts -2- and -3-.
- Press coolant pipe -1- to rear and detach.

Installing

Installation is carried out in the reverse order; note the following:

Note

Renew seals and O-rings.

- Before installing, clean and smooth down sealing surfaces for O-rings as required.
- Lubricate new O-ring with coolant and slide onto coolant pipe.
- Slide coolant pipe into bores in cylinder block and cylinder head.
- Install oil filter bracket ⇒ page 170 .
- Fill up with coolant ⇒ page 179 .

Tightening torques

Component		Nm
Coolant pipe (centre) to:	Cylinder block	10
	Cylinder head	10

1.11 Removing and installing viscous fan

Special tools and workshop equipment required

- Open-end spanner -3312-

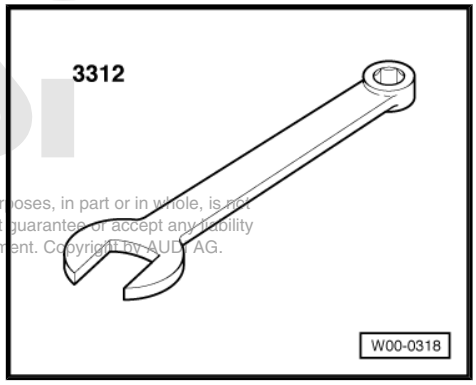

Protected by copyright. Copying for private or commercial purposes, in part or in whole, is not permitted unless authorised by AUDI AG. AUDI AG does not guarantee or accept any liability with respect to the correctness of information in this document. Copyright by AUDI AG.

Removing

– Detach caps on engine cover panel.

– Unbolt and remove engine cover panel -arrows-.

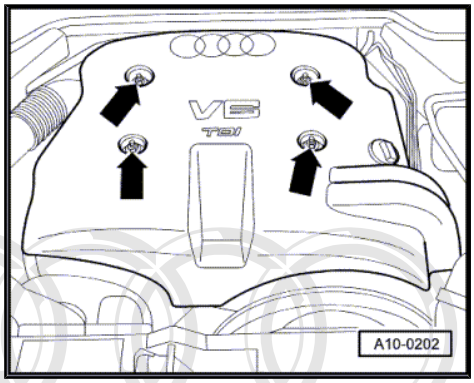

– Unscrew viscous fan (32 mm).

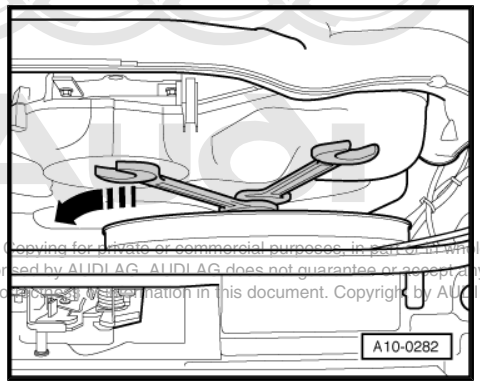

Protected by copyright. Copying for private or commercial purposes, in part or in whole, is not permitted unless authorised by AUDI AG. AUDI AG does not guarantee or accept any liability with respect to the correctness of information in this document. Copyright by AUDI AG.

– Unscrew bolt -arrow- from front and remove air duct for viscous fan.

– Detach viscous fan with air duct.

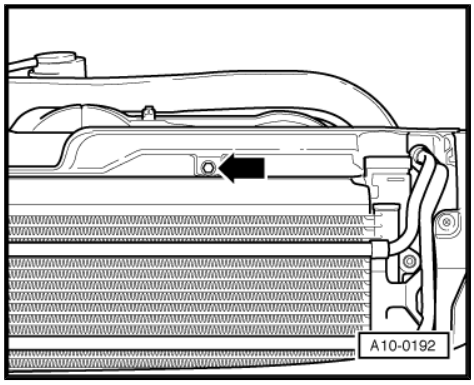

Installing

Installation is carried out in the reverse order; note the following:

– Secure viscous fan.

Tightening torque for viscous fan	Nm
Torque wrench -V.A.G 1331- together with open-end spanner -3312-	37
Torque wrench -V.A.G 1331- without open-end spanner -3312-	70

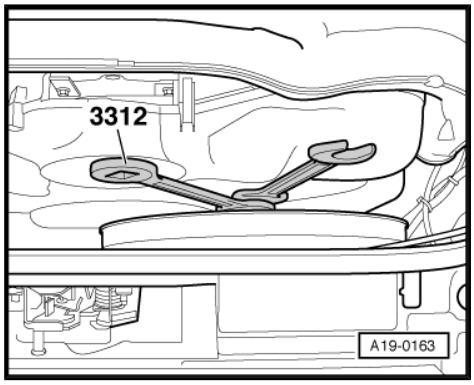

1.12 Removing and installing radiator

Special tools and workshop equipment required

- Drip tray for workshop hoist -VAS 6208-

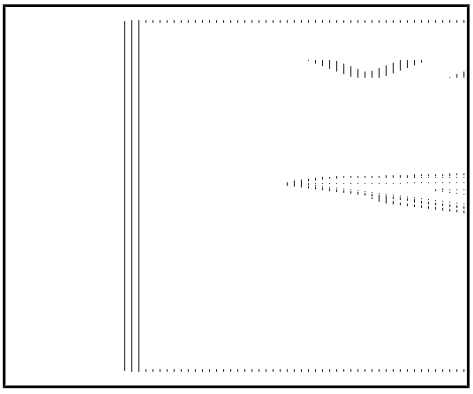

Removing

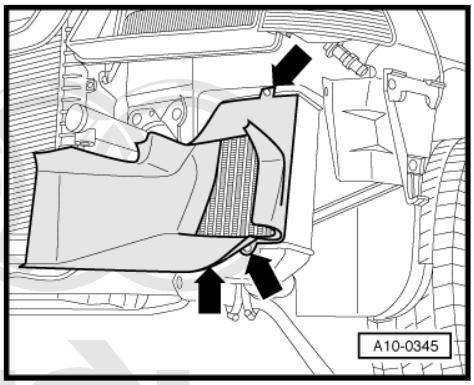

Note

If there are slight impressions on the fins, refer to ⇒ page 5 .

WARNING

Hot steam/hot coolant can escape - risk of scalding.

- ***The cooling system is under pressure when the engine is hot.***
- ***To allow pressure to dissipate, cover filler cap on expansion tank with cloth and open carefully.***

Protected by copyright. Copying for private or commercial purposes, in part or in whole, is not permitted unless authorised by AUDI AG. AUDI AG does not guarantee or accept any liability with respect to the correctness of information in this document. Copyright by AUDI AG.

– Open filler cap on expansion tank.

– Remove bolts -arrows- securing exhaust pipe for auxiliary/ supplementary heater to noise insulation.

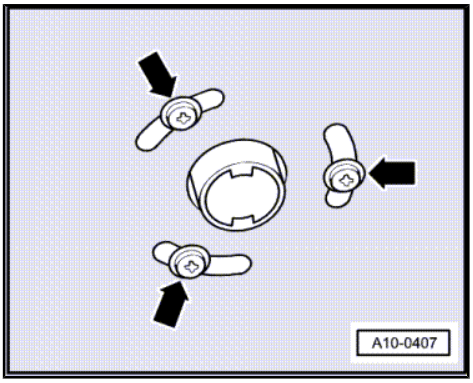

– Open quick-release fasteners -1- and remove noise insulation (front).

– Place drip tray for workshop hoist -VAS 6208- beneath engine.

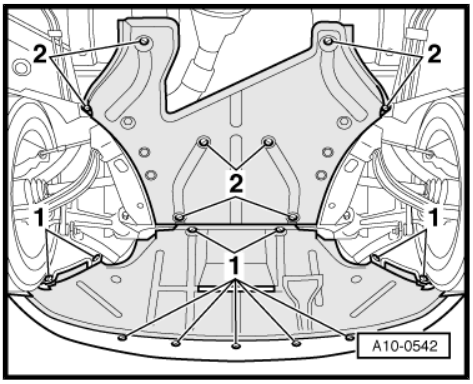

– Turn drain plug -arrow- on right of radiator anti-clockwise, if necessary fit drain hose to connection.
– Pull out retaining clip and disconnect coolant hose (bottom) from radiator.
– Remove front bumper ⇒ Rep. Gr. 63 .

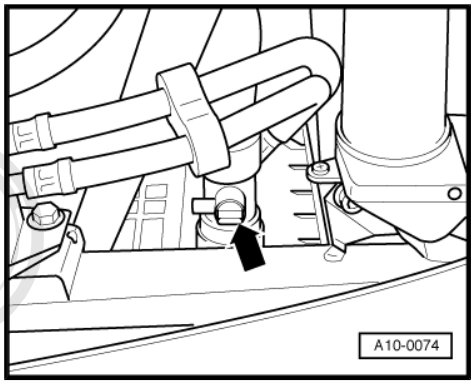

– Remove air ducts -1- and -2-.
– Remove air hose (right-side) from charge air cooler.

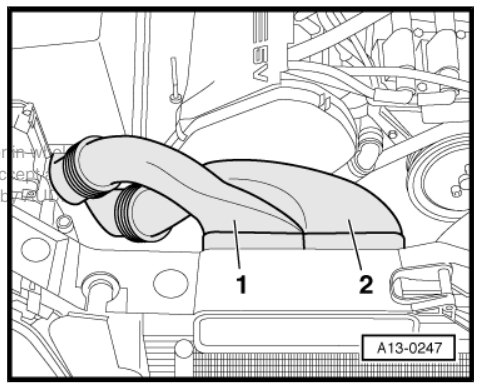

Vehicles with automatic gearbox:

Protected by copyright. Copying for private or commercial purposes, in part or in whole, is not permitted unless authorised by AUDI AG. AUDI AG does not guarantee or accept any liability with respect to the correctness of information in this document. Copyright by AUDI AG.

Note

Observe rules for cleanliness when working on automatic gearbox ⇒ Rep. Gr. 00 .

– Detach ATF pipes from radiator ⇒ Rep. Gr. 37 .

All vehicles (continued):

– Lift retaining clip and disconnect coolant hose (top left) from radiator.

– Unscrew bolt -arrow- from front and remove air duct for viscous fan.
– Remove air hose (left-side) from charge air cooler.

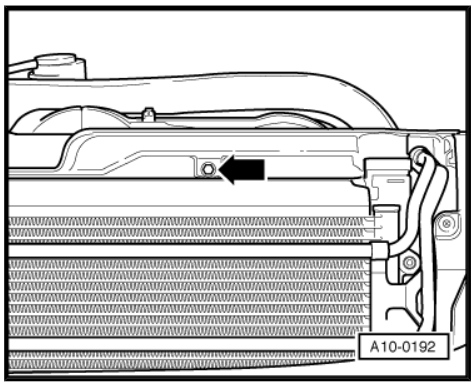

Vehicles up to 11.1998:

– Remove trim strips underneath headlights ⇒ Rep. Gr. 94 .
– Unbolt brackets -2- and -5- for trim strips from headlights.

All vehicles (continued):

– Remove air ducts (left-side) -4- and -6- and air ducts (right-side) -1- and -3- from radiator.

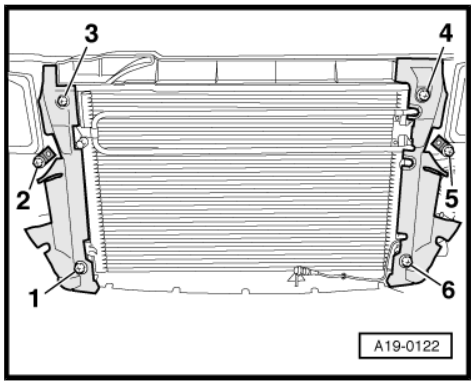

– Remove bolts -1- and -2-.

– Detach cooling pipe for power steering hydraulic fluid and move clear to one side, leaving lines connected.

– Remove bottom air duct -3-.

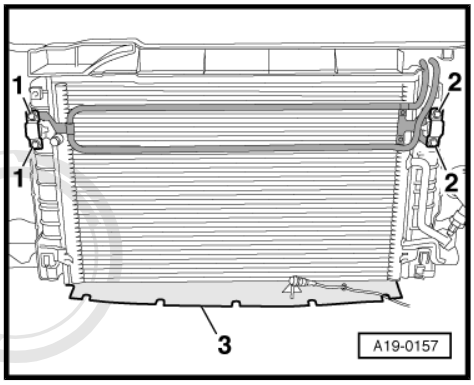

– Unplug electrical connectors -arrows-.

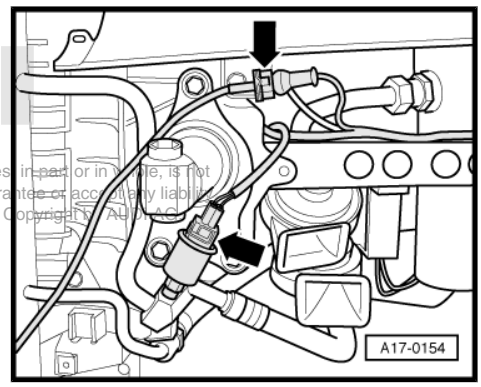

WARNING

Risk of injury caused by refrigerant.

- *The air conditioner refrigerant circuit must not be opened.*

Protected by copyright. Copying for private or commercial purposes, in part or in whole, is not permitted unless authorised by AUDI AG. AUDI AG does not guarantee or accept any liability with respect to the correctness of information in this document. Copyright by AUDI AG.

Caution

Make sure that condenser and refrigerant pipes and hoses are not damaged.

- *Do NOT stretch, kink or bend refrigerant lines and hoses.*

– Pull condenser upwards out of brackets, swivel to left side and set down securely.

– Prise off both caps -1- at top of lock carrier.

– Release the two retaining pins -2- for radiator and pull them out upwards -arrows-.

– Detach spacer -3-.

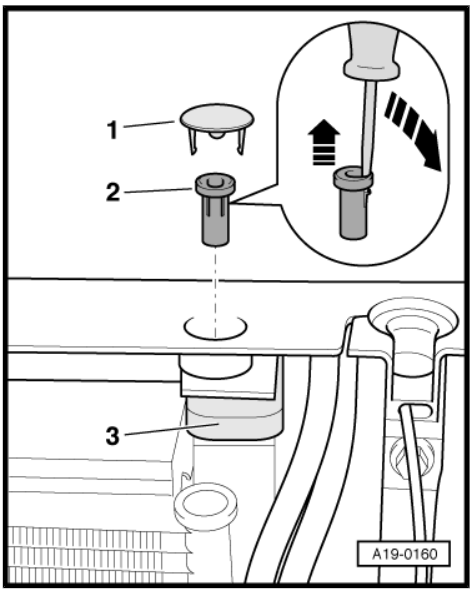

– Remove the four bolts -arrows- for radiator/charge air cooler (left and right).
– Swivel radiator and charge air cooler forwards.

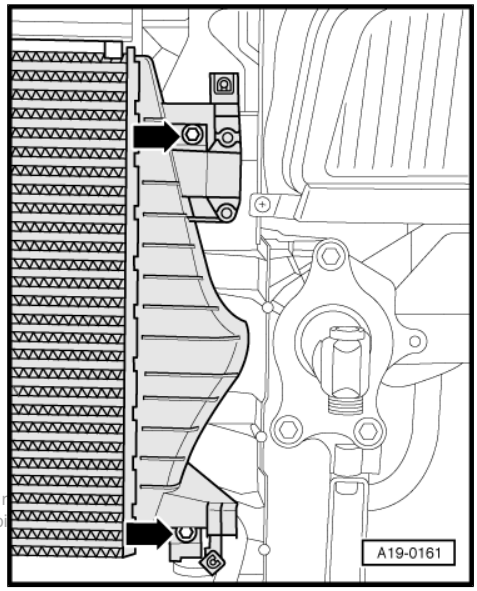

Protected by copyright. Copying for private or commercial purposes, in part or in whole, is n
permitted unless authorised by AUDI AG. AUDI AG does not guarantee or accept any liabi
with respect to the correctness of information in this document. Copyright by AUDI AG.

– Unclip trim (top) from charge air cooler -arrows-.
– Detach radiator and charge air cooler.

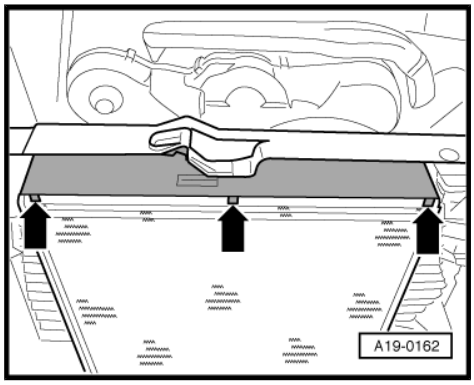

Installing

Installation is carried out in the reverse order; note the following:

Vehicles with automatic gearbox:

– Secure ATF lines to ATF cooler ⇒ Rep. Gr. 37 .
– Check ATF level ⇒ Rep. Gr. 37 .

All vehicles (continued):

– Install front bumper ⇒ Rep. Gr. 63 .
– Fill up with coolant ⇒ page 179 .

Tightening torques

Component	Nm
Condenser to radiator	10
Charge air cooler to radiator	10

1.13 Checking cooling system for leaks

Special tools and workshop equipment required

♦ Cooling system tester -V.A.G 1274- with adapter -V.A.G 1274/1-

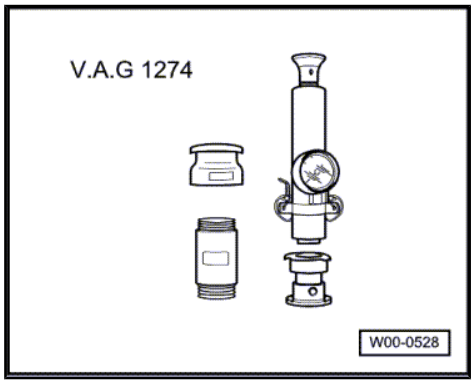

Procedure

• Engine must be warm.

WARNING

Hot steam/hot coolant can escape - risk of scalding.

- *The cooling system is under pressure when the engine is hot.*
- *Cover filler cap on expansion tank with a cloth and open carefully to dissipate pressure.*

– Open filler cap on expansion tank.
– Fit cooling system tester -V.A.G 1274- with adapter -V.A.G 1274/1- onto coolant expansion tank.
– Using hand pump on cooling system tester, build up a pressure of approx. 1.0 bar.
– If this pressure is not maintained, locate and rectify leaks.

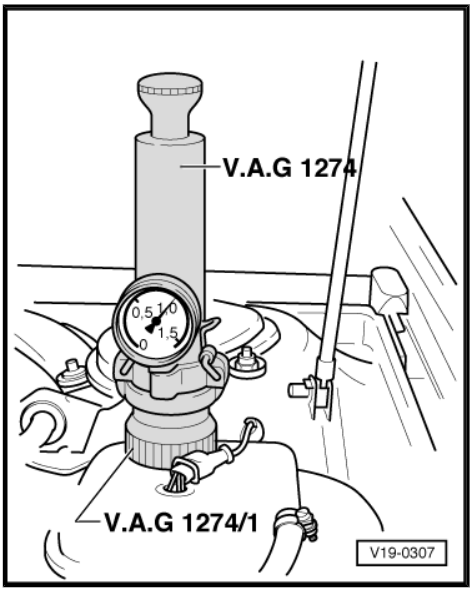

Checking pressure relief valve in filler cap

– Fit cooling system tester -V.A.G 1274 B- with adapter -V.A.G 1274/1- onto filler cap.
– Build up pressure with hand pump on cooling system tester.
• The pressure relief valve should open at a pressure of 1.2 ... 1.5 bar.
– Renew filler cap if pressure relief valve does not open as described.

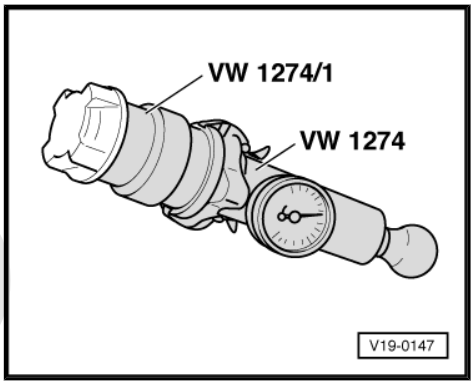

Protected by copyright. Copying for private or commercial purposes, in part or in whole, is not permitted unless authorised by AUDI AG. AUDI AG does not guarantee or accept any liability with respect to the correctness of information in this document. Copyright by AUDI AG.

21 – Turbocharging/supercharging

1 Charge air system with turbocharger

1.1 Hose connection diagram for charge pressure control

1 - To breather connection at air cleaner housing

2 - Vacuum hose

- ❑ To vacuum reservoir/ exhauster pump

3 - Vacuum hose

- ❑ From charge pressure control solenoid valve -N75- to vacuum unit for charge pressure control

4 - Brake servo

5 - Vacuum reservoir

- ❑ Fitting location: in front left wheel housing beneath liner

6 - Non-return valve

- ❑ Installation position (light side/dark side): as shown in illustration

7 - Exhauster pump

8 - To variable intake manifold flap change-over valve -N239-

9 - Vacuum hose

- ❑ From exhaust gas recirculation valve -N18- to mechanical exhaust gas recirculation valve

10 - Charge pressure control solenoid valve -N75-

11 - Exhaust gas recirculation valve -N18-

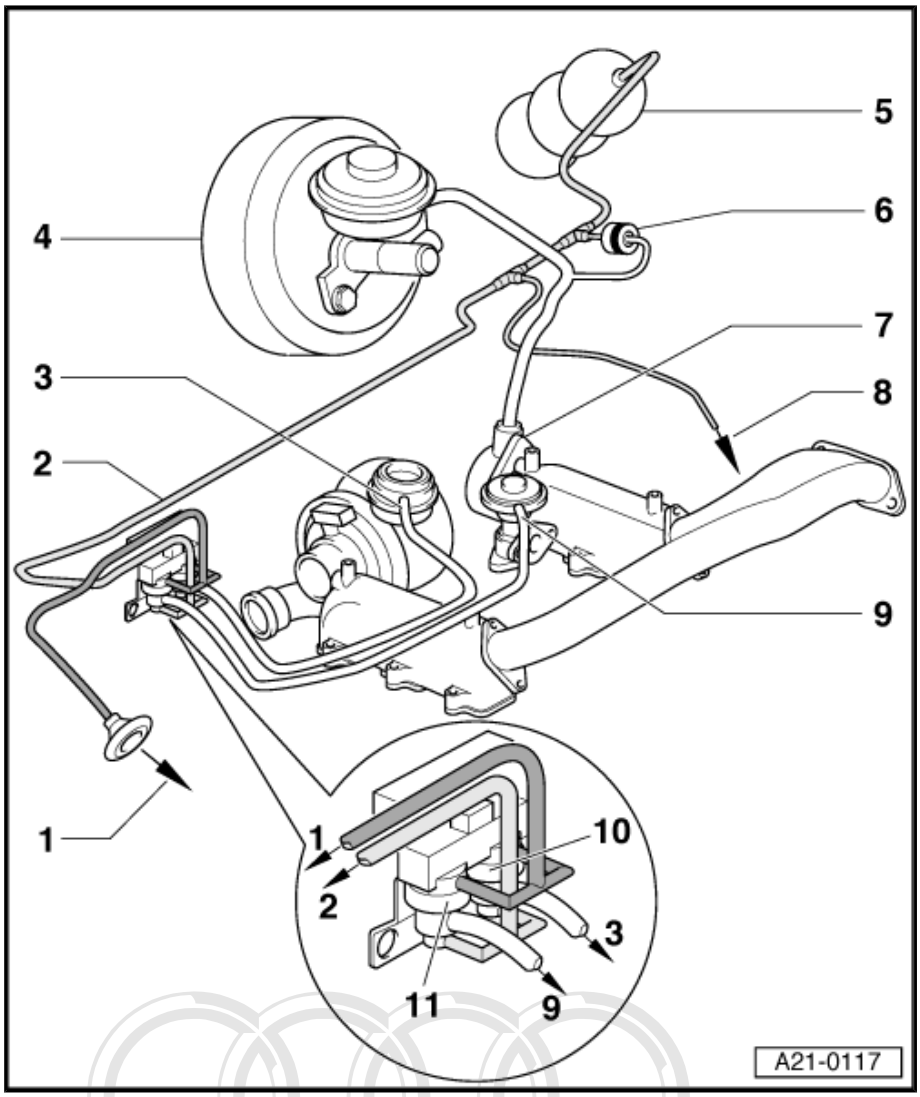

1.2 Test requirements for checking turbocharging system

- Fault memory of engine control unit interrogated.
- Exhaust gas recirculation system OK, checking ⇒ page 261 .

Note

Reliable values cannot be obtained when checking turbocharger system if the exhaust gas recirculation system is defective.

Protected by copyright. Copying for private or commercial purposes, in part or in whole, is not permitted unless authorised by AUDI AG. AUDI AG does not guarantee or accept any liability with respect to the correctness of information in this document. Copyright by AUDI AG.

- No leaks in the intake and exhaust systems.

- No leaks in vacuum hoses.
- Vacuum pipe to charge pressure regulating valve not obstructed, loose or leaking.
- No faults on engine or injection system (e.g. compression pressure/commencement of injection or injectors).

1.3 Effects of leaks in charge air system

A - Leaks downstream of air mass meter

Possible causes of trouble:

1 - Hose connecting air mass meter to turbocharger

2 - Connecting hose to crankcase breather

Protected by copyright. Copying for private or commercial purposes, in part or in whole, is not permitted unless authorised by AUDI AG. AUDI AG does not guarantee or accept any liability with respect to the correctness of information in this document. Copyright by AUDI AG.

Effect:

- Loss of power

B - Leaks downstream of turbocharger (intake side)

Possible causes of trouble:

1 - Air intake hoses and pipes between turbocharger and charge air cooler

2 - Air hoses and pipes between charge air cooler and intake manifolds

3 - Charge air cooler

4 - Seal underneath charge pressure sender -G31-

5 - Seals between intake manifolds

6 - Gaskets between intake manifold and cylinder head

Effect:

- Inadequate charge pressure

C - Leaks downstream of turbocharger (exhaust side)

Possible causes of trouble:

1 - Components of exhaust gas recirculation system

2 - Connection between exhaust manifold and cylinder head

3 - Connection between exhaust manifold and intermediate pipes

4 - Connection between intermediate pipes and intermediate flange

5 - Connection between exhaust manifold and turbocharger

Effect:

- Inadequate charge pressure; possible smell of exhaust gas, traces of soot in engine compartment

1.4 Checking turbocharger and charge pressure control

Special tools and workshop equipment required

♦ Adapter -V.A.G 1318/11-

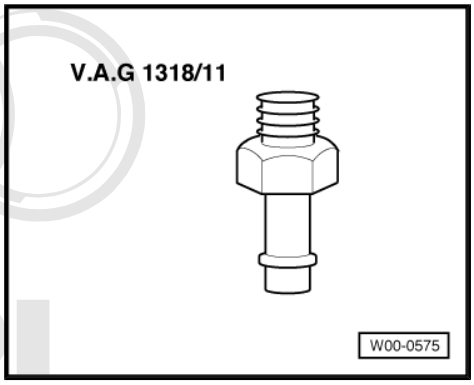

♦ Turbocharger tester -V.A.G 1397A-

Protected by copyright. Copying for private or commercial purposes, in part or in whole, is not permitted unless authorised by AUDI AG. AUDI AG does not guarantee or accept any liability with respect to the correctness of information in this document. Copyright by AUDI AG.

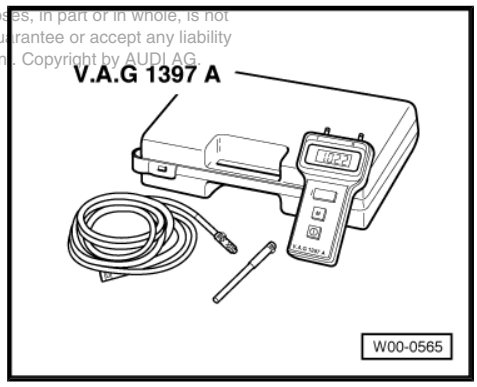

♦ Vehicle diagnostic, testing and information system -VAS 5051B-

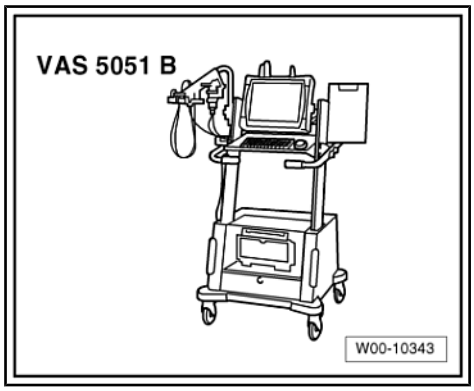

Procedure

- Charge pressure is measured under full load while driving or on a roller dynamometer.
- Test duration per measurement: max. 10 seconds

– Unscrew plug at intake manifold (front).

– Screw adapter -V.A.G 1318/11- into hole in intake manifold.

– Connect adapter -V.A.G 1318/11- to hose of turbocharger tester -V.A.G 1397A- using test hoses.

– Route test hose under rear edge of bonnet and through right window into passenger compartment.

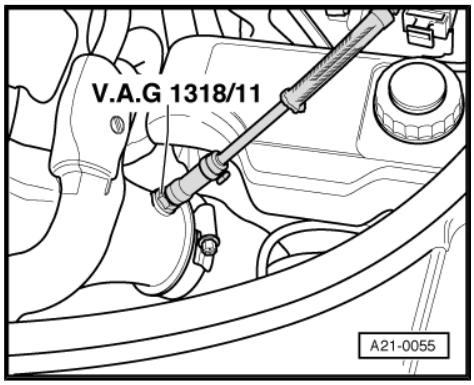

– Switch on turbocharger tester and set measuring range selector switch to position -I- (absolute pressure).
– Attach test hose to connection -I-.

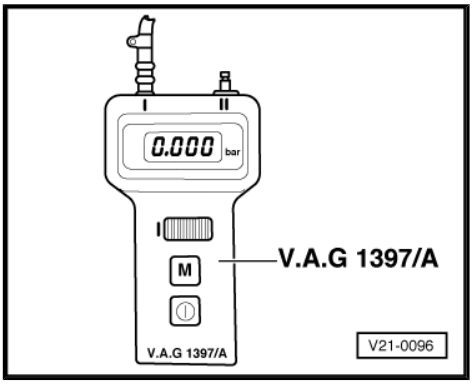

Note

- *Ensure absolute leakproof connection of hoses to avoid measurement errors.*
- *Take care not to trap test hose at bonnet and side window.*
- *Pressing memory button -M- on turbocharger tester causes last measured value to be stored until memory button -M- is pressed again or tester is switched off.*
- *The decimal point in the display flashes to indicate that the value is being stored.*
- *If the battery voltage of the turbocharger tester drops below the minimum level, an arrow will appear at the top left of the display.*
- *Before performing the test, drive vehicle moderately fast for at least 3 km (without stopping at traffic lights etc.).*

WARNING

Accidents can be caused if the driver is distracted by test equipment while road-testing, or if test equipment is not properly secured.

- ***Observe safety precautions*** *⇒ page 3* *.*

- Vehicle diagnostic, testing and information system -VAS 5051B- connected.
- Ignition switched on.
- `Vehicle self-diagnosis` and vehicle system “01 - Engine electronics” selected.

Display on -VAS 5051B- :

– From menu -1-, select diagnosis function “Measured values” and press ⇨ key to continue.

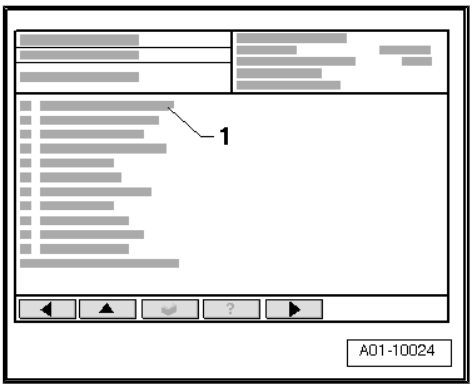

Protected by copyright. Copying for private or commercial purposes, in part or in whole, is not permitted unless authorised by AUDI AG. AUDI AG does not guarantee or accept any liability with respect to the correctness of information in this document. Copyright by AUDI AG.

Display on -VAS 5051B- :

– Press keys 1 1 on keypad -1- to select “Display group 011” and confirm entry by pressing Q key.

– Accelerate vehicle in 3rd gear (or position 2) from 2000 rpm at full throttle while a second mechanic observes the rev counter.

– Have the second mechanic press PRINT key on -VAS 5051B- and memory key -M- on -V.A.G 1397A- simultaneously at approx. 3000 rpm.

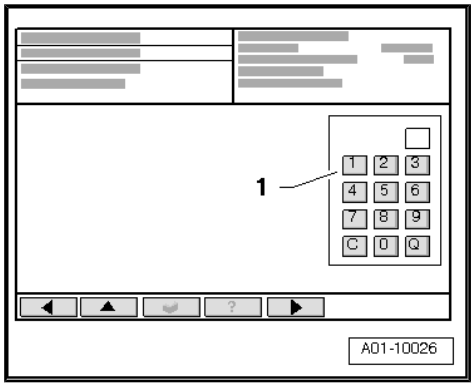

Note

The charge pressure should be measured using turbocharger tester -V.A.G 1397A- . Vehicle diagnostic, testing and information system -VAS 5051B- is used to check whether the charge pressure is being registered by the control unit.

Display on -V.A.G 1397 A- :

- Specification: 1.960 ... 2.160 bar.

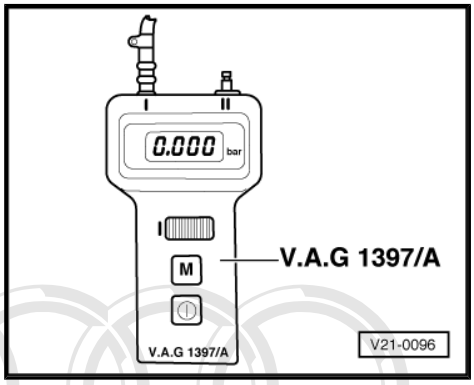

Display on -VAS 5051B- :

– Check display in display zone -3-.

- Specification: 1960 … 2160 mbar.

If charge pressure is not within the specified range:

– Check linkage and vacuum unit for charge pressure control ⇒ page 212 .

– Check charge pressure control solenoid valve -N75- ⇒ page 207 .

If both are OK, but the charge pressure is too low:

– Renew turbocharger ⇒ page 220 .

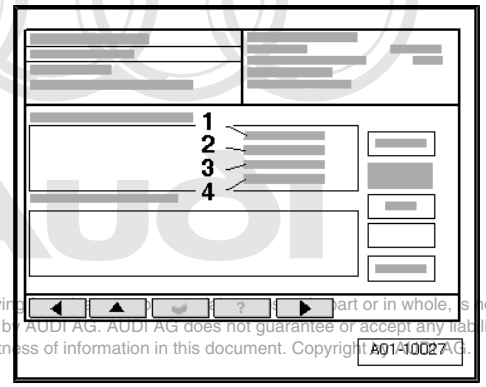

Protected by copyright. Copying for any purpose, in whole or in part or in whole, is not permitted unless authorised by AUDI AG. AUDI AG does not guarantee or accept any liability with respect to the correctness of information in this document. Copyright by AUDI AG.

1.5 Checking charge pressure control solenoid valve -N75-

Special tools and workshop equipment required

- Hand-held multimeter -V.A.G 1526D-
- Auxiliary measuring set -V.A.G 1594C-
- Adapter -V.A.G 1598/30- (engine code AFB for vehicles with manual gearbox or automatic gearbox; engine code AKN for vehicles with manual gearbox)
- Adapter cable, 121-pin -V.A.G 1598/31- (engine code AKN for vehicles with automatic gearbox)
- Vehicle diagnostic, testing and information system -VAS 5051B-
- Hand vacuum pump -VAS 6213-

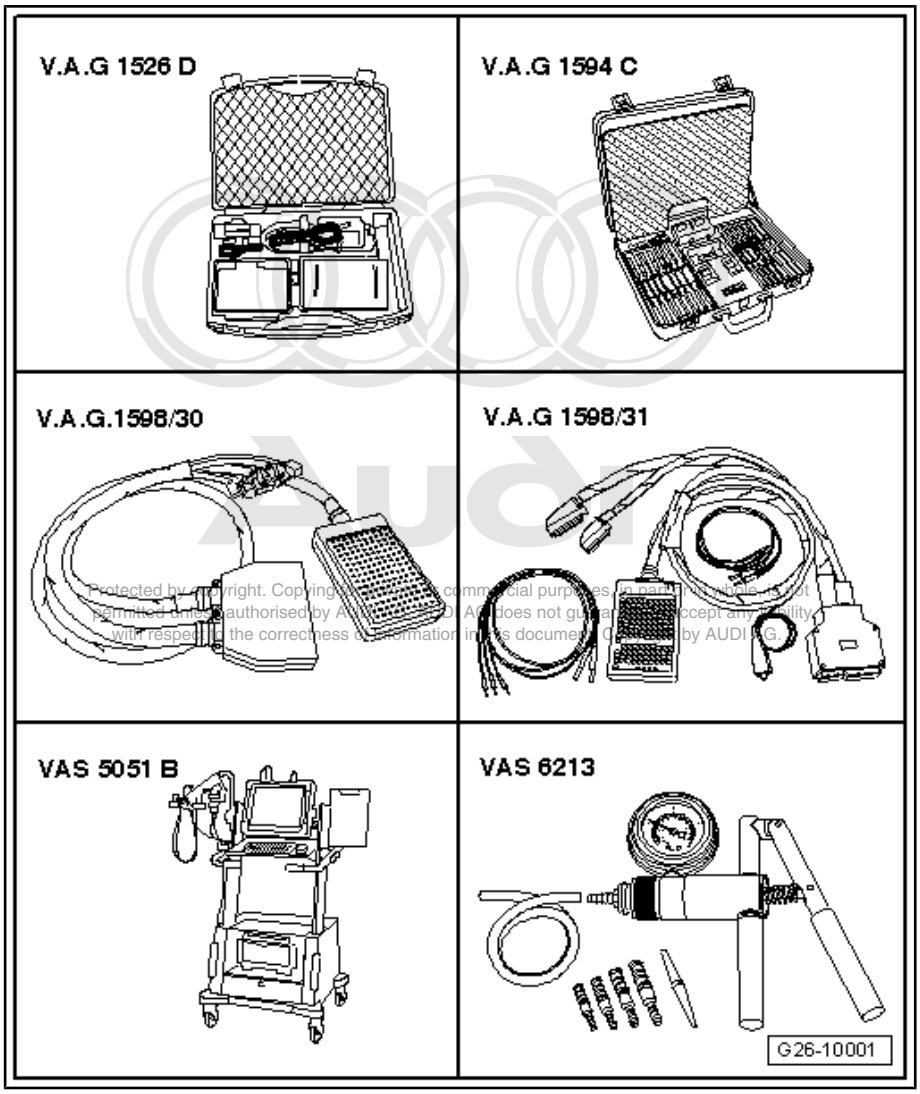

Protected by copyright. Copying for commercial purposes, in part, is not permitted unless authorised by AUDI AG. AUDI does not guarantee or accept any liability with respect to the correctness of information in this document. Copyright by AUDI AG.

Procedure

Note

Charge pressure control solenoid valve -N75- and its wiring are monitored by the engine control unit.

- Vehicle diagnostic, testing and information system -VAS 5051B- connected.
- Engine running.
- `Vehicle self-diagnosis` and vehicle system “01 - Engine electronics” selected.

Display on -VAS 5051B- :

– From menu -1-, select diagnostic function “Interrogate fault memory” and press [→] key to continue.

If the display shows a fault relating to charge pressure control valve -N75- :

– Press [←] key to terminate function “Interrogate fault memory”.

Checking operation:

– Leave engine running at idling speed.

Display on -VAS 5051B- :

– From menu -1-, select diagnosis function “Basic setting” and press [→] key to continue.

Display on -VAS 5051B- :

– Press keys [1] [1] on keypad -1- to select “Display group 011” and confirm entry by pressing [Q] key.

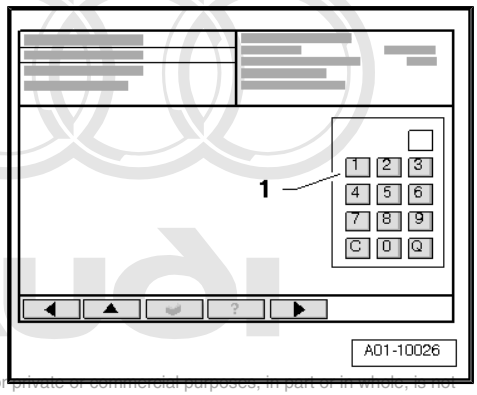

Protected by copyright. Copying for private or commercial purposes, in part or in whole, is not permitted unless authorised by AUDI AG. AUDI AG does not guarantee or accept any liability with respect to the correctness of information in this document. Copyright by AUDI AG.

Display on -VAS 5051B- :

– Check display in display zone -2-.

• Specification: display should alternate between “ON” and “OFF” every 10 seconds

– Check display in display zone -4-.

• Specification: display should alternate between “0%” and “100%” every 10 seconds

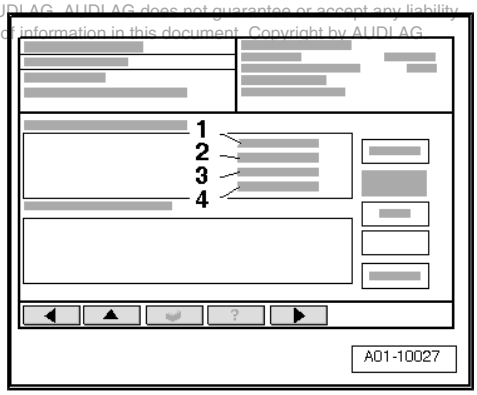

– Check operating rod of turbocharger:

• Specification: Operating rod should move up with display “ON” and down with display “OFF”

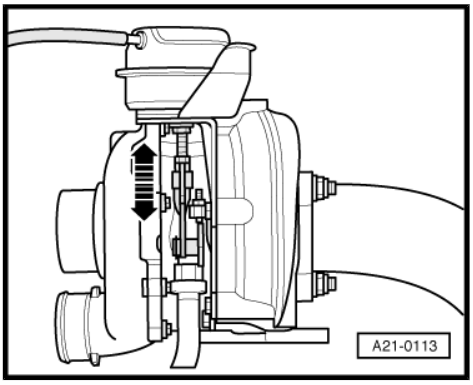

Checking mechanical operation

– Switch off ignition.

– Unplug electrical connectors -1 ... 4-.

– Disengage electrical connector -3- from bracket.

– Slide charge pressure control solenoid valve -N75- and exhaust gas recirculation valve -N18- off bracket in direction of -arrow-.

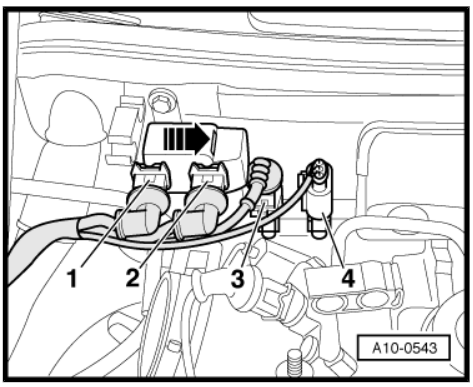

– Detach hose at vacuum connection -3- (leave hose at connection -2- attached to turbocharger).

– Connect hand vacuum pump -VAS 6213- to vacuum connection -3-.

Protected by copyright. Copying for private or commercial purposes, in part or in whole, is not permitted unless authorised by AUDI AG. AUDI AG does not guarantee or accept any liability with respect to the correctness of information in this document. Copyright by AUDI AG.

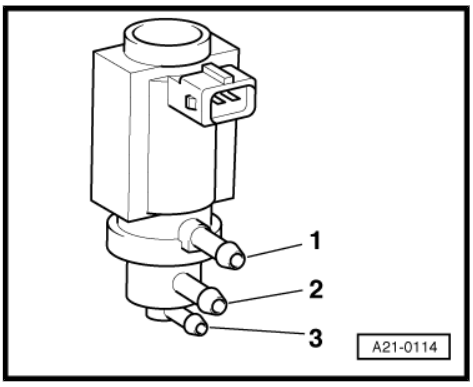

– Use a test lead from auxiliary measuring set -V.A.G 1594C- to connect contact -2- of solenoid valve to battery positive “+”.

– Connect contact -1- to earth.

• The valve should click.

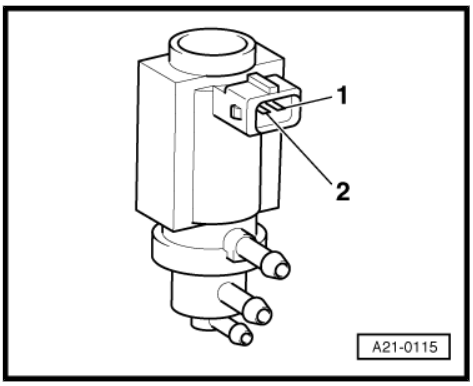

– Operate vacuum pump.

• Vacuum is applied to vacuum unit for charge pressure control at turbocharger - operating rod should move up.

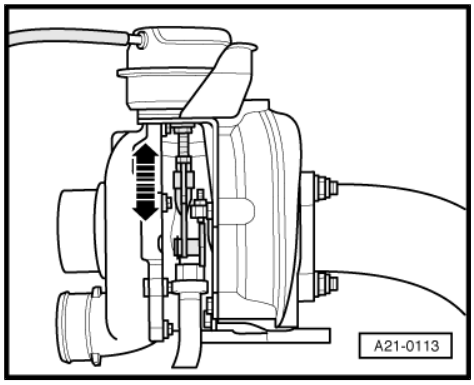

– Detach earth connection from contact -1- of solenoid valve.

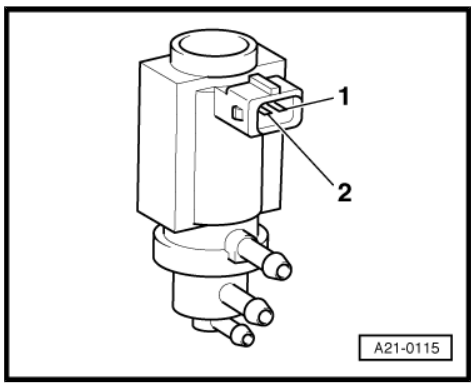

• Vacuum is no longer applied to vacuum unit for charge pressure control of turbocharger - operating rod should move down into rest position.

This document is copyrighted and intended for personal use only. Any other use is not permitted. Reproduction, distribution and transmission to third parties is not permitted. Published by AUDI AG. AUDI AG does not guarantee or accept any liability with respect to the correctness of information in this document. Copyright by AUDI AG.

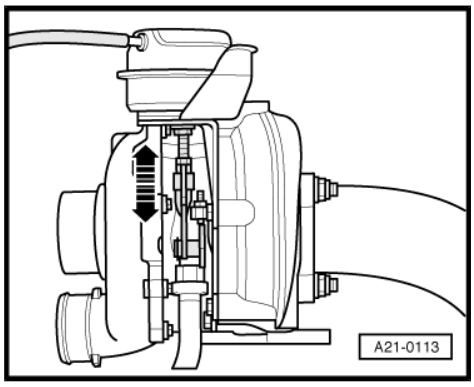

Checking voltage supply

– Connect hand-held multimeter -V.A.G 1526D- for voltage measurement as follows:

Connector Contact	Measure against
2	Earth

– Switch on ignition.

• Specification: approx. battery voltage.

If specification is not obtained:

– Check wiring connection for open circuit and short to positive or earth ⇒ Current flow diagrams, Electrical fault finding and Fitting locations.

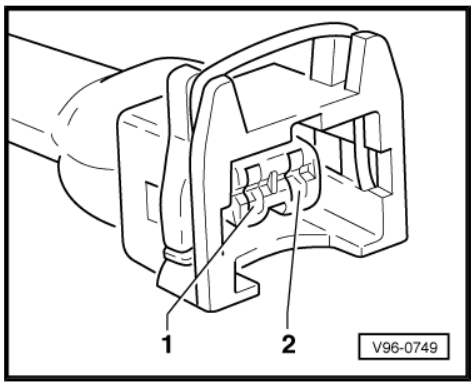

Checking internal resistance

– Unplug electrical connector -arrow- at charge pressure control solenoid valve -N75- .

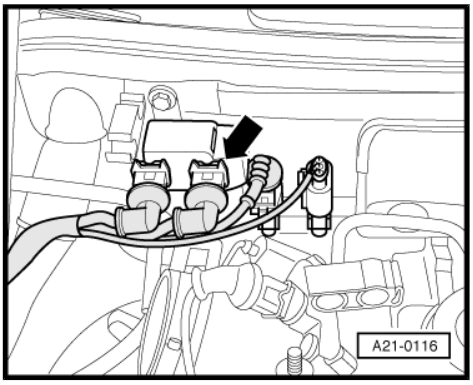

– Connect hand-held multimeter -V.A.G 1526D- to valve to measure resistance.

• Specification: 14 ... 20 Ω.

If specification is not obtained:

– Renew charge pressure control solenoid valve -N75- .

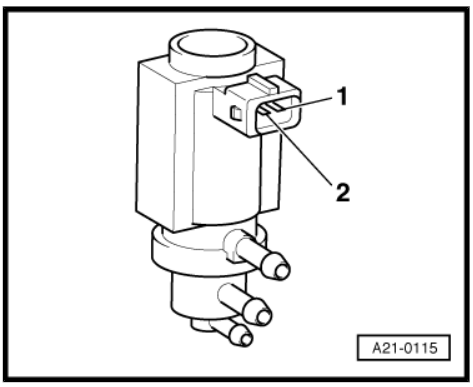

Checking signal wire

– Slacken off cross-head bolts -1- at electronics box in plenum chamber.

– Unclip plenum chamber cover -2- at front of bulkhead -arrows-.

– Detach plenum chamber cover.

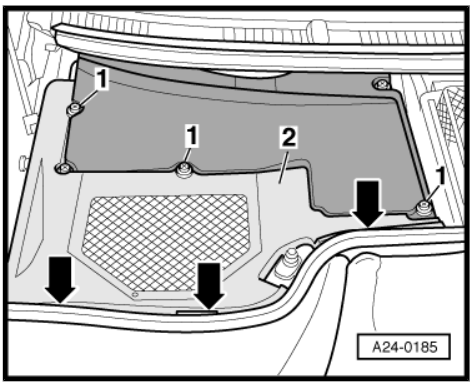

– Prise out cover -1- in cowl panel trim and loosen rear cross-head bolt -arrow- at rear right.

– Slacken off the remaining cross-head bolts -arrows-.

– Detach cover for electronics box in plenum chamber.

– Release retaining clip and unplug connectors from control unit.

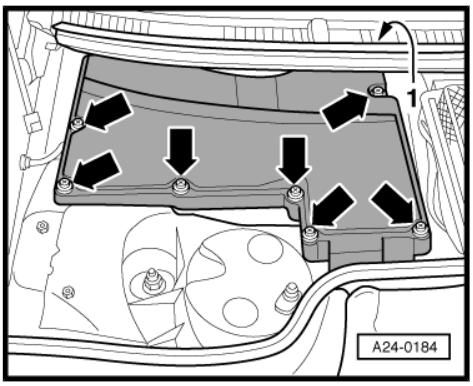

Protected by copyright. Copying for private or commercial purposes, in part or in whole, is not permitted unless authorised by AUDI AG. AUDI AG does not guarantee or accept any liability with respect to the correctness of information in this document. Copyright by AUDI AG.

Engine code AFB for vehicles with manual gearbox or automatic gearbox, engine code AKN for vehicles with manual gearbox:

– Connect adapter -V.A.G 1598/30- to unplugged connectors for engine control unit (not to control unit).

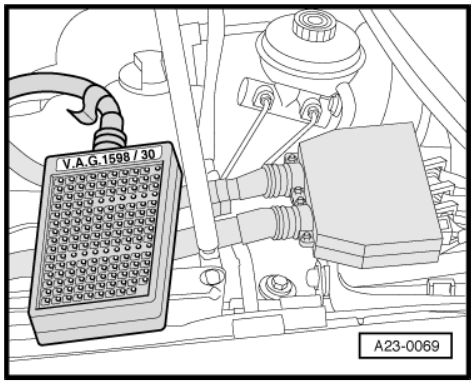

Engine code AKN for vehicles with automatic gearbox:

– Connect adapter cable, 121-pin -V.A.G 1598/31- to connector of wiring harness (do not connect engine control unit).

– Connect earth clip of adapter cable to earth (not shown in illustration).

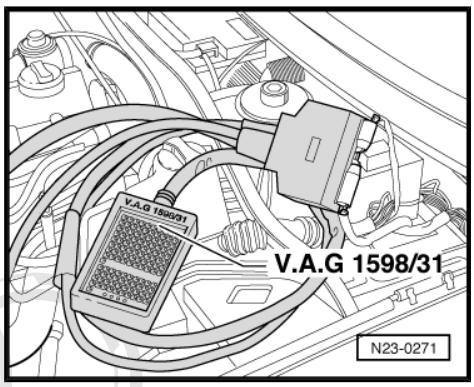

All vehicles (continued):

> **Caution**
>
> *Electronic components are susceptible to damage.*
>
> ♦ *Select the appropriate measuring range before connecting the test leads and observe test requirements.*

– Check for open circuit and short to positive or earth in the following wiring:

Connector Contact	-V.A.G 1598/30- Socket	-V.A.G 1598/31- Socket
1	2/21	62

– Repair wiring connection if necessary.

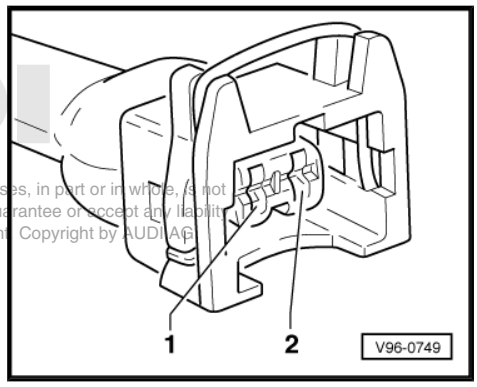

Protected by copyright. Copying for private or commercial purposes, in part or in whole, is not permitted unless authorised by AUDI AG. AUDI AG does not guarantee or accept any liability with respect to the correctness of information in this document. Copyright by AUDI AG

1.6 Checking linkage and vacuum unit for charge pressure control at turbocharger

Note

- *Problems with linkage/vacuum unit for charge pressure control result in the following faults:*
- *Not achieving the specified charge pressure values.*
- *Loss of power.*
- *Uneven power delivery at part throttle*
- *Jolts when throttle is opened or closed.*

Special tools and workshop equipment required

♦ Turbocharger tester -V.A.G 1397A-

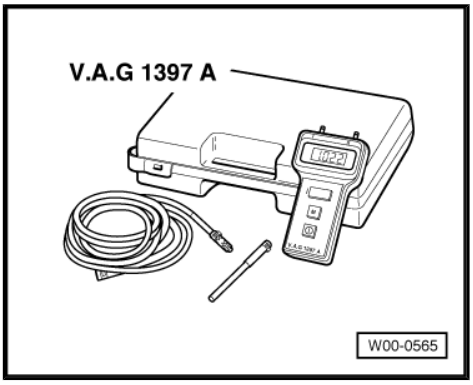

♦ Hand vacuum pump -VAS 6213-

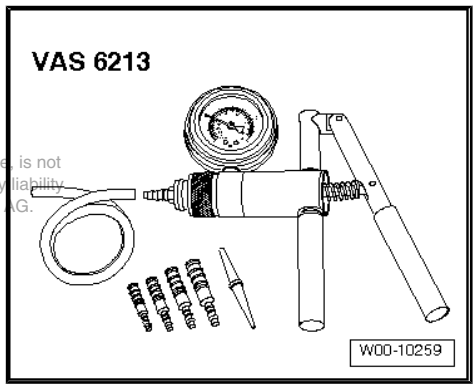

Protected by copyright. Copying for private or commercial purposes, in part or in whole, is not permitted unless authorised by AUDI AG. AUDI AG does not guarantee or accept any liability with respect to the correctness of information in this document. Copyright by AUDI AG.

– Check that all vacuum hoses have been fitted and are not leaking ⇒ page 202 .

Procedure

– Switch on turbocharger tester and set measuring range selector switch to position -I- (absolute pressure).

– Attach test hose to connection -I-.

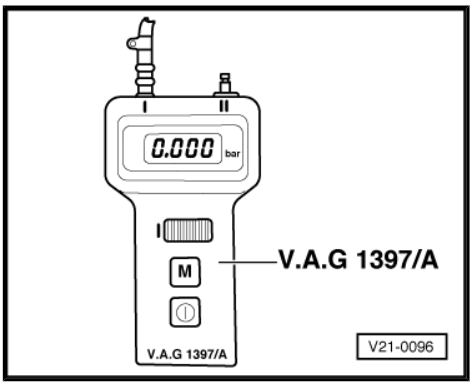

– Detach caps on engine cover panel.

– Unbolt and remove engine cover panel -arrows-.

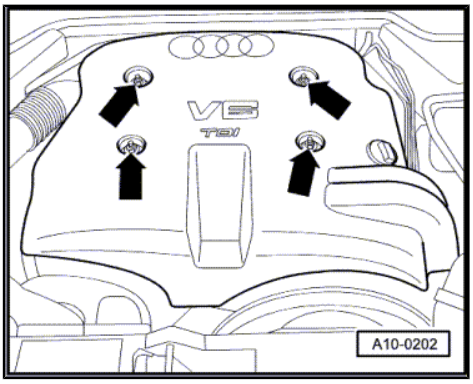

– Disconnect hose -arrow- from vacuum unit for charge pressure control.

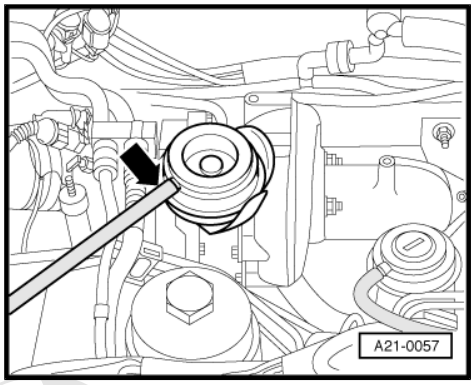

– Connect hand vacuum pump -VAS 6213- or -V.A.G 1390- and turbocharger tester -V.A.G 1397A- using test hoses (as shown in illustration).

– Operate vacuum pump.

– Read the vacuum value on turbocharger tester -V.A.G 1397A- .

– Also observe linkage at turbocharger.

• Specification at 150 ± 20 mbar: linkage should start to move up

• Specification at 620 ± 20 mbar: linkage should make contact with upper stop

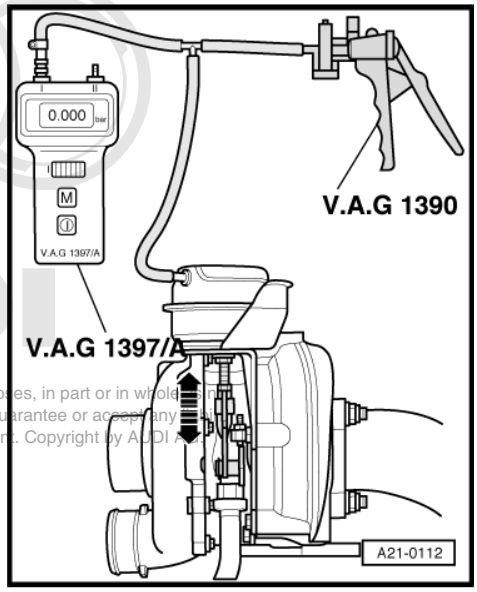

Protected by copyright. Copying for private or commercial purposes, in part or in whole, is not permitted unless authorised by AUDI AG. AUDI AG does not guarantee or accept any liability with respect to the correctness of information in this document. Copyright by AUDI AG.

If the specified values are not achieved or if the linkage does not move smoothly:

– Renew turbocharger ⇒ page 220 .

1.7 Checking intake manifold pressure sender -G71-

Special tools and workshop equipment required

- Hand-held multimeter -V.A.G 1526D-
- Auxiliary measuring set -V.A.G 1594C-
- Adapter -V.A.G 1598/30- (engine code AFB for vehicles with manual gearbox or automatic gearbox; engine code AKN for vehicles with manual gearbox)
- Adapter cable, 121-pin -V.A.G 1598/31-
- Vehicle diagnostic, testing and information system -VAS 5051B- (engine code letters AKN for vehicles with automatic gearbox)

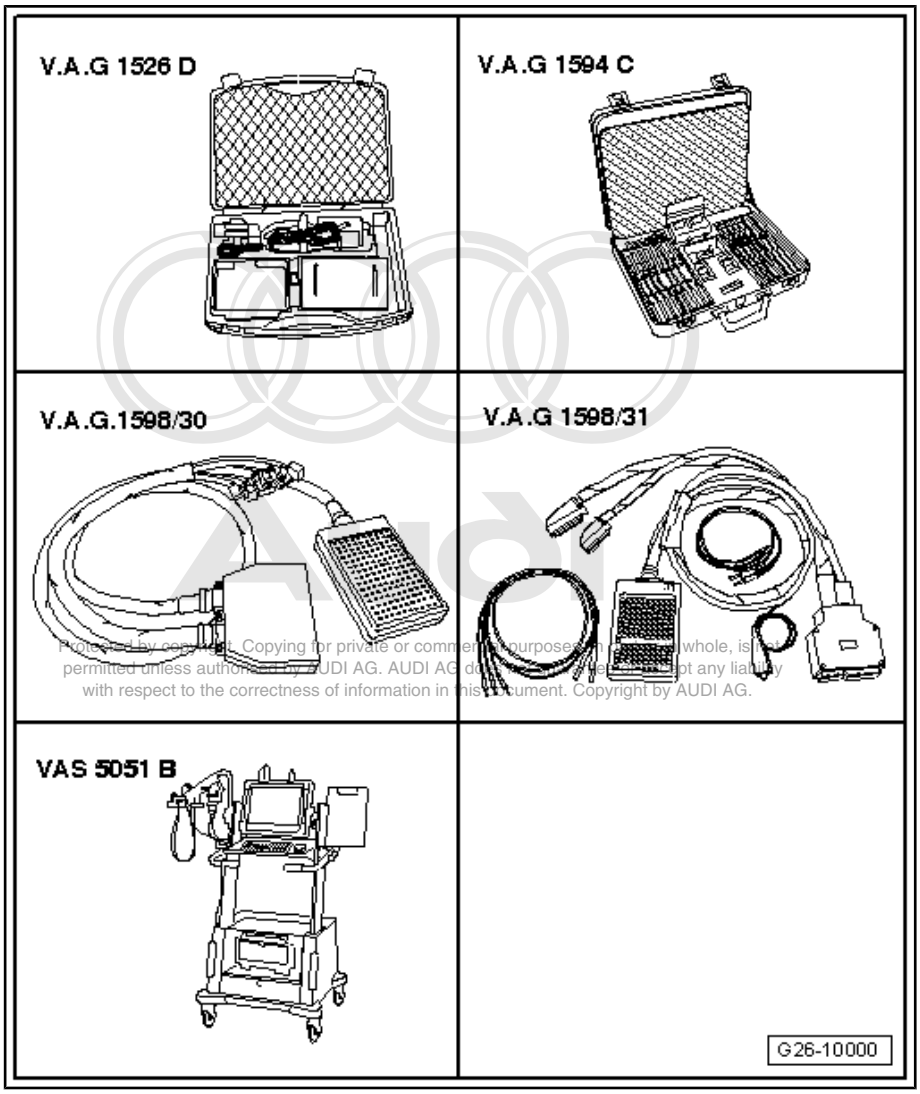

Protected by copyright. Copying for private or commercial purposes, in part or in whole, is not permitted unless authorised by AUDI AG. AUDI AG does not guarantee or assume any liability with respect to the correctness of information in this document. Copyright by AUDI AG.

Procedure

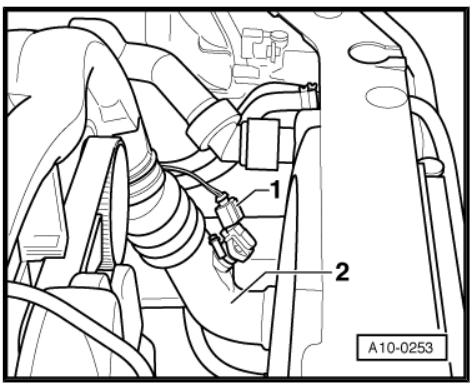

Note

- *The intake manifold pressure sender -G71- and the wiring connections are monitored by the engine control unit.*
- *Fitting location of intake manifold pressure sender -G71- -1-: in air hose (left-side) -2- leading to charge air cooler.*

- Vehicle diagnostic, testing and information system -VAS 5051B- connected.
- Engine running.
- `Vehicle self-diagnosis` and vehicle system “01 - Engine electronics” selected.

Display on -VAS 5051B- :

– From menu -1-, select diagnostic function “Interrogate fault memory” and press → key to continue.

If a fault relating to intake manifold pressure sender -G71- is displayed:

– Press ← key to terminate function “Interrogate fault memory”.

Checking operation:

– Leave engine running at idling speed.

Display on -VAS 5051B- :

– From menu -1-, select diagnosis function “Measured values” and press → key to continue.

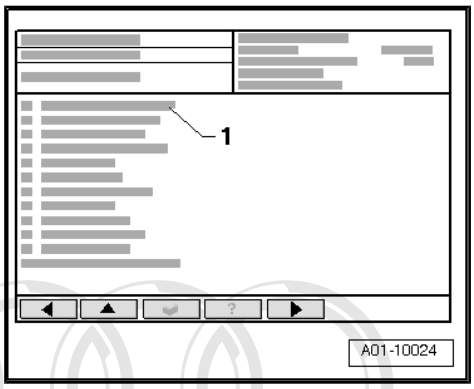

Display on -VAS 5051B- :

– Press keys 1 1 on keypad -1- to select “Display group 011” and confirm entry by pressing Q key.

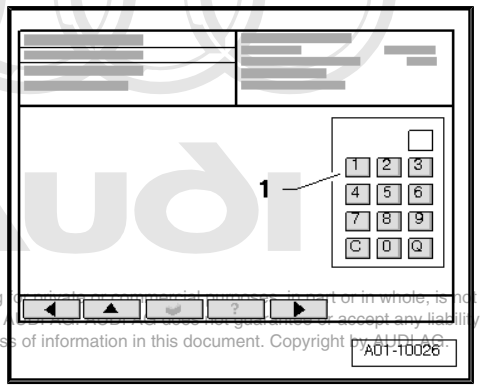

Protected by copyright. Copying for private or commercial purposes, in part or in whole, is not permitted unless authorised by AUDI AG. AUDI AG does not guarantee or accept any liability with respect to the correctness of information in this document. Copyright by AUDI AG.

Display on -VAS 5051B- :

– Check display in display zones -2- and -3-.

• Specification: The pressures should be the same (tolerance: ± 100 mbar).

– Check other possible causes for reading not matching specification:

Charge pressure too low:

– Check charge pressure control ⇒ page 203 .

Charge pressure too high:

– Check charge pressure control solenoid valve -N75- ⇒ page 207 .

– Check whether hose for charge pressure control has become detached or clogged.

– Check linkage and vacuum unit for charge pressure control ⇒ page 212 .

If no fault is found:

– Check wiring.

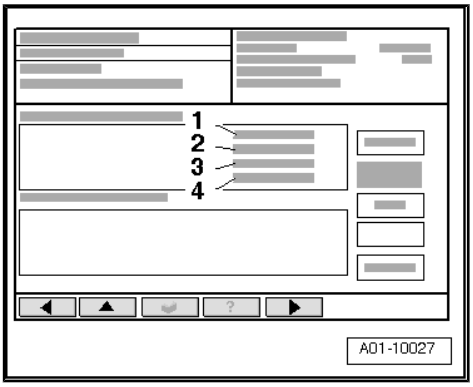

Checking wiring

Engine code AFB for vehicles with manual gearbox or automatic gearbox, engine code AKN for vehicles with manual gearbox:

– Connect adapter -V.A.G 1598/30- to unplugged connectors for engine control unit (not to control unit).

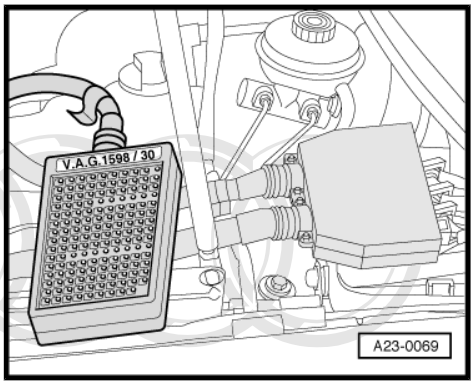

Engine code AKN for vehicles with automatic gearbox:

– Connect adapter cable, 121-pin -V.A.G 1598/31- to connector of wiring harness (do not connect engine control unit).

– Connect earth clip of adapter cable to earth (not shown in illustration).

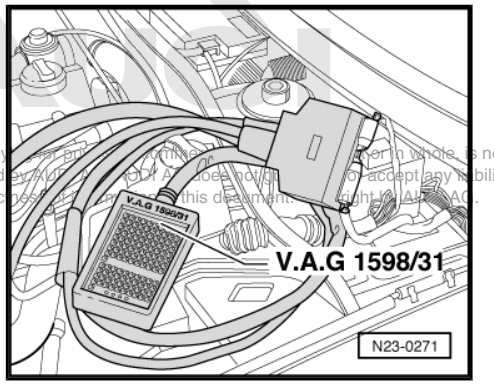

Protected by copyright. Copy[illegible] permitted unless authorised [illegible] AG does not [illegible] accept any liability with respect to the correc[illegible] this document. [illegible] AG.

All vehicles (continued):

> ⚠ **Caution**
>
> *Electronic components are susceptible to damage.*
>
> ◆ *Select the appropriate measuring range before connecting the test leads and observe test requirements.*

– Unplug electrical connector -1- at intake manifold pressure sender -G71- .

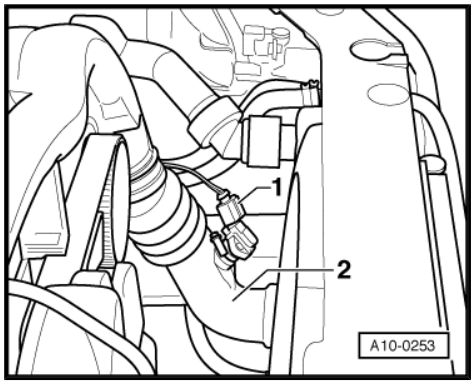

– Check for open circuit and short to positive or earth in the following wiring:

Connector Contact	-V.A.G 1598/30- Socket	-V.A.G 1598/31- Socket
1	3/16	52
3	3/14	31
4	3/15	71

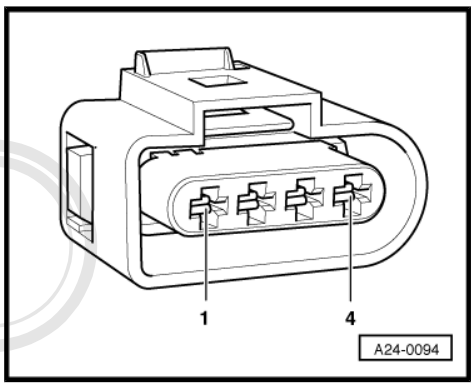

– Rectify any open/short circuit as necessary.

If no fault is found:

– Renew intake manifold pressure sender -G71- .

Protected by copyright. Copying for private or commercial purposes, in part or in whole, is not permitted unless authorised by AUDI AG. AUDI AG does not guarantee or accept any liability with respect to the correctness of information in this document. Copyright by AUDI AG.

2 Turbocharger

– Observe rules for cleanliness ⇒ page 4 .

Caution

If the turbocharger has suffered mechanical damage (e.g. damaged compressor wheel), it is not sufficient merely to fit a new turbocharger. The following work must be performed in order to avoid further damage:

- *Check air cleaner housing, air filter element and air intake hoses for dirt and foreign particles.*
- *Check the entire charge air system (including the charge air cooler) for foreign matter.*
- *If foreign matter is found in the charge air system, clean all relevant ducts and hoses and renew charge air cooler if necessary.*

2.1 Turbocharger - exploded view

1 - O-ring
- ❑ Renew

2 - Oil return pipe
- ❑ To cylinder block

3 - Gasket
- ❑ Renew

4 - O-ring
- ❑ Renew

5 - Bolt
- ❑ 10 Nm

6 - Hose
- ❑ To vacuum unit for charge pressure control

7 - Bolt
- ❑ 22 Nm

8 - Oil supply pipe
- ❑ From oil filter bracket

9 - Banjo bolt
- ❑ 15 Nm

10 - Seals
- ❑ Renew

11 - Bolt
- ❑ 10 Nm

12 - Heat shield

13 - Turbocharger
- ❑ Checking ⇒ page 203
- ❑ Removing and installing ⇒ page 220

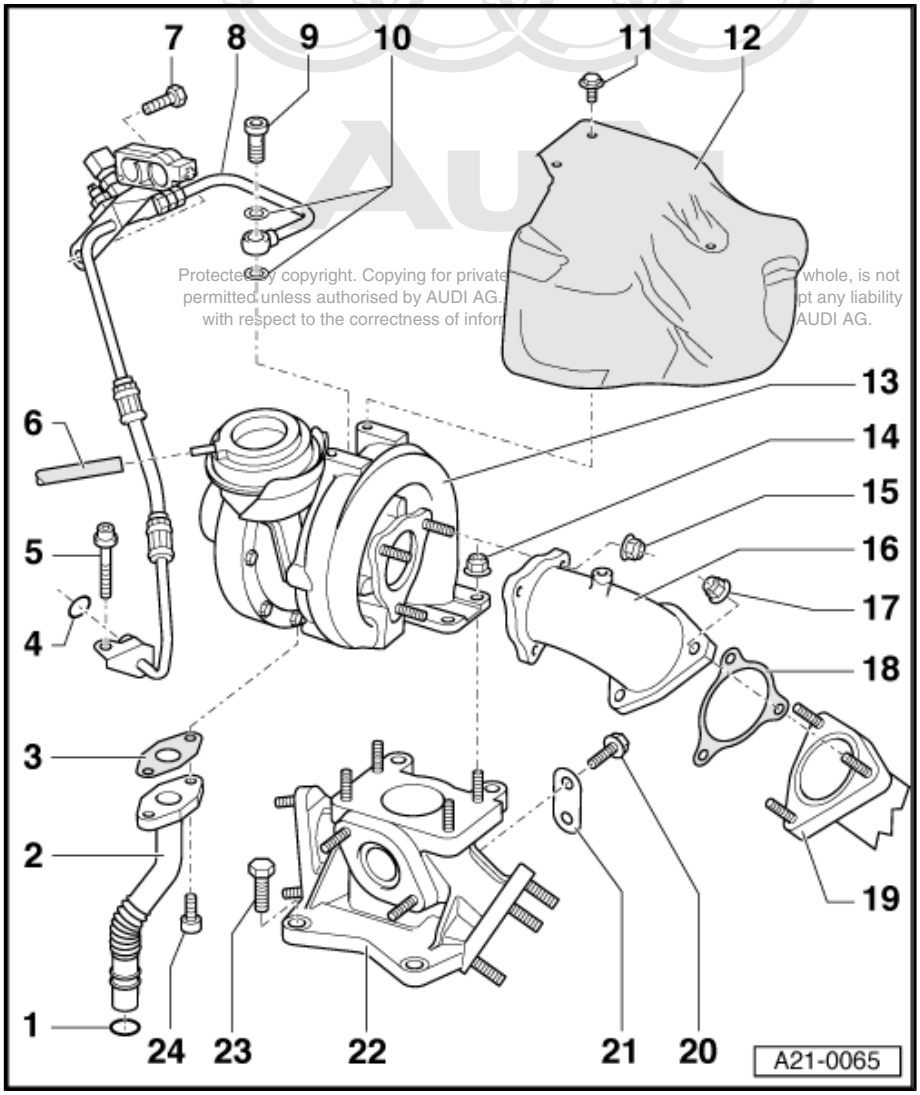

Protected by copyright. Copying for private whole, is not permitted unless authorised by AUDI AG. pt any liability with respect to the correctness of infor AUDI AG.

14 - Nut

- ❑ Renew
- ❑ 22 Nm

15 - Nut

- ❑ Renew

22 Nm

16 - Exhaust elbow

- ❑ For turbocharger

17 - Nut

- ❑ Renew
- ❑ 25 Nm

18 - Gasket

- ❑ Renew

19 - Front exhaust pipe with catalytic converter

- ❑ Removing and installing ⇒ page 235

20 - Bolt

- ❑ 22 Nm

21 - Support

- ❑ For intermediate flange

22 - Intermediate flange

- ❑ Removing and installing ⇒ page 224

23 - Bolt

- ❑ 22 Nm

24 - Bolt

- ❑ 10 Nm

2.2 Removing and installing turbocharger

Removing

– Open quick-release fasteners -2- and remove rear noise insulation.

– Remove front exhaust pipe from mounting plate.

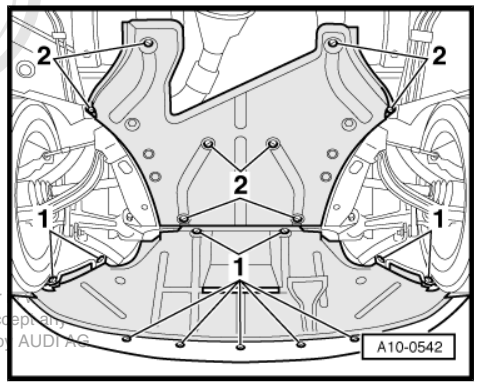

Protected by copyright. Copying for private or commercial purposes, in part or
permitted unless authorised by AUDI AG. AUDI AG does not guarantee or accept any
with respect to the correctness of information in this document. Copyright by AUDI AG

– Detach caps on engine cover panel.
– Unbolt and remove engine cover panel -arrows-.

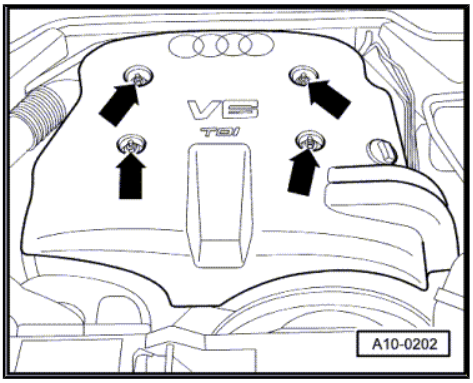

– Remove heat shield above turbocharger -arrows-.

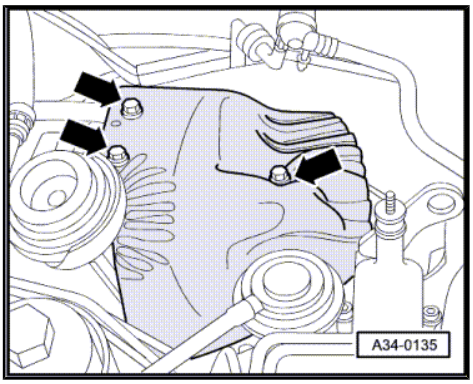

– Unbolt front exhaust pipe from connection for turbocharger -arrows-.
– Press exhaust system to rear and downwards.

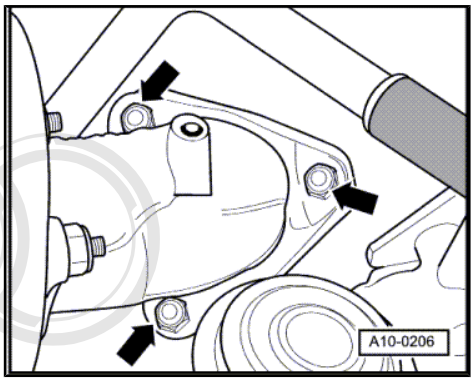

– Unbolt elbow from turbocharger -arrows-.

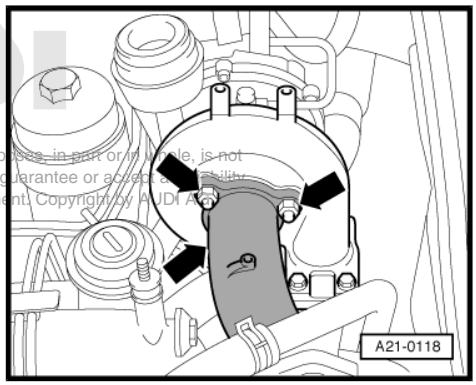

Protected by copyright. Copying for private or commercial purposes, in part or in whole, is not permitted unless authorised by AUDI AG. AUDI AG does not guarantee or accept any liability with respect to the correctness of information in this document. Copyright by AUDI AG.

– Remove air hose from air cleaner -arrows-.

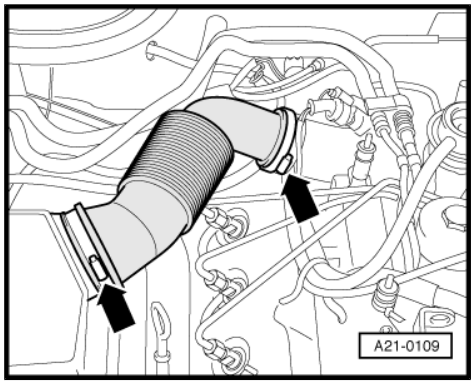

– Remove hose leading to turbocharger -arrows-.

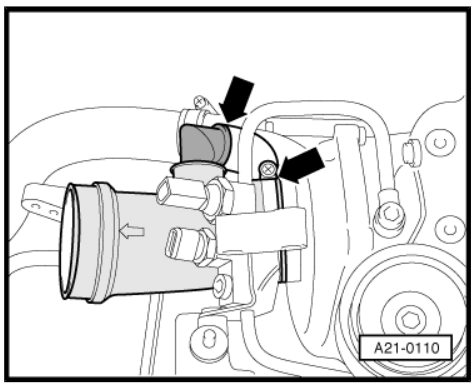

– Disconnect hose -arrow- from vacuum unit for charge pressure control.

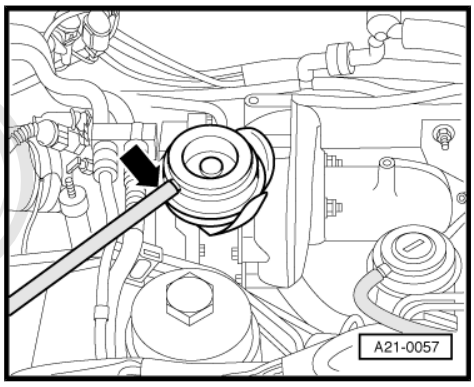

– Release hose clips -1- and push hose in direction of -arrow-.
– Unclip fuel lines from bracket at oil pipe.
– Move wiring clear.

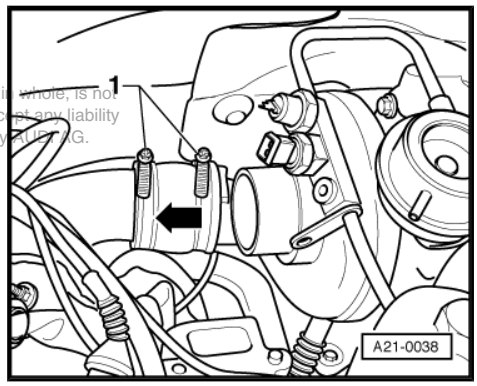

Protected by copyright. Copying for private or commercial purposes, in part or in whole, is not permitted unless authorised by AUDI AG. AUDI AG does not guarantee or accept any liability with respect to the correctness of information in this document. Copyright by AUDI AG.

– Detach oil pipe -1- at turbocharger.
– Unscrew oil pipe at intake manifold -2-.

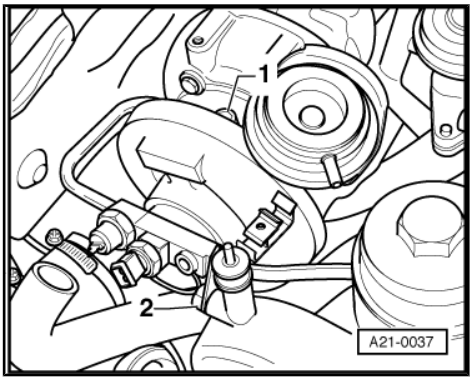

– Unscrew turbocharger from intermediate flange -arrows- (4 nuts).
– Detach turbocharger.

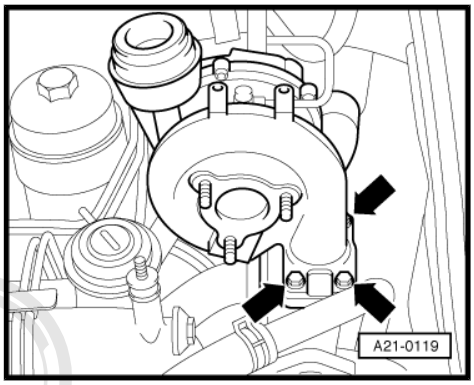

Note

Close off oil bore in cylinder block with clean cloths.

Protected by copyright. Copying for private or commercial purposes, in part or in whole, is not permitted unless authorised by AUDI AG. AUDI AG does not guarantee or accept any liability with respect to the correctness of information in this document. Copyright by AUDI AG.

Installing

Installation is carried out in the reverse order; note the following:

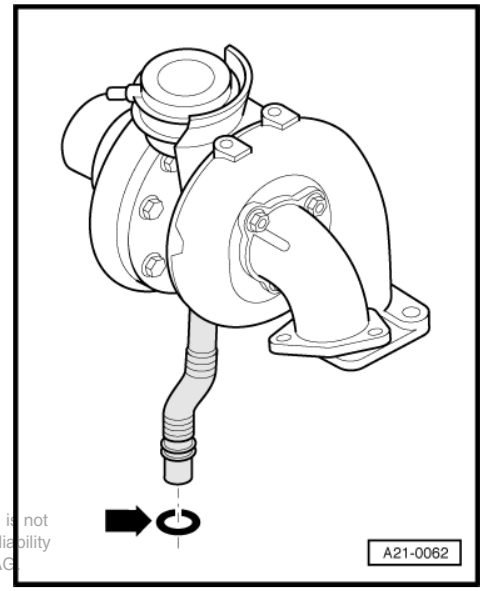

Note

- *Renew gaskets, seals, O-rings and self-locking nuts.*
- *Hose connections and hoses for charge air system must be free of oil and grease before assembly.*
- *Secure all hose connections with the correct type of hose clips (same as original equipment) ⇒ Electronic parts catalogue .*
- *When installing turbocharger, ensure that O-ring -arrow- for oil return is not damaged.*
- *Fill turbocharger with engine oil at connection for oil supply pipe.*
- *After installing turbocharger, allow engine to idle for approx. 1 minute and do not rev up immediately to ensure turbocharger is supplied with oil.*

Protected by copyright. Copying for private or commercial purposes, in part or in whole, is not permitted unless authorised by AUDI AG. AUDI AG does not guarantee or assume any liability with respect to the correctness of information in this document. Copyright by AUDI AG.

– Install front exhaust pipe together with catalytic converter ⇒ page 235 .

– Check engine oil level ⇒ Maintenance ; Booklet 403 .

Tightening torques

Component	Nm
Turbocharger to intermediate flange	22
Oil pipe to intake manifold	22
Oil return pipe to turbocharger	10
Oil supply pipe to turbocharger	15
Exhaust elbow to turbocharger	22
Heat shield to turbocharger	10

2.3 Removing and installing intermediate flange for turbocharger

Removing

– Remove exhaust manifold (left-side) together with intermediate pipe: engine code letters AFN, AKN ⇒ page 247 , engine code letters AKE ⇒ page 250 .

– Remove turbocharger ⇒ page 220 .

– Unbolt coolant pipe from intermediate flange -arrow-.

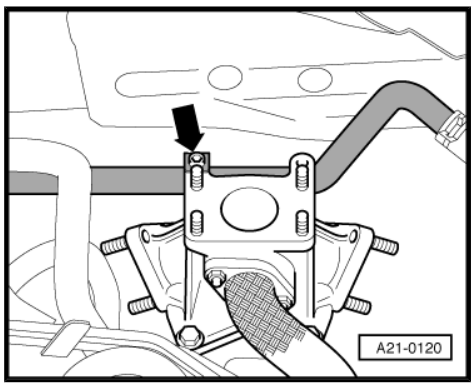

– Remove bolts -2- and -5- at mechanical exhaust gas recirculation valve -4-.
– Remove nuts -3-.
– Remove bolts -1-.
– Remove pipe section -6-.
– Detach mechanical EGR valve.

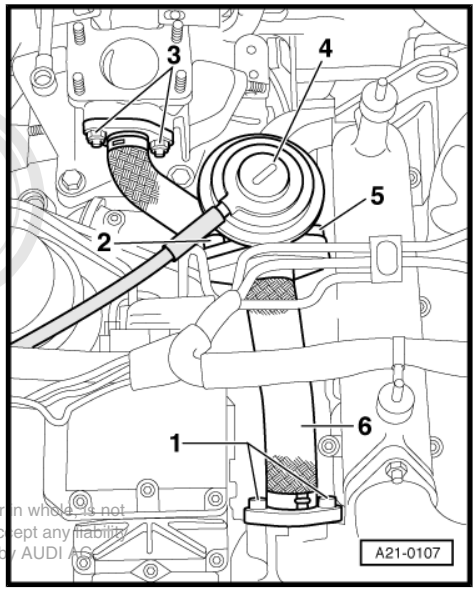

Protected by copyright. Copying for private or commercial purposes, in part or in whole, is not permitted unless authorised by AUDI AG. AUDI AG does not guarantee or accept any liability with respect to the correctness of information in this document. Copyright by AUDI AG.

– Remove top left securing bolt -arrow 1- on engine/gearbox flange.
– Unscrew bolts -arrows 2-.
– Detach intermediate flange.

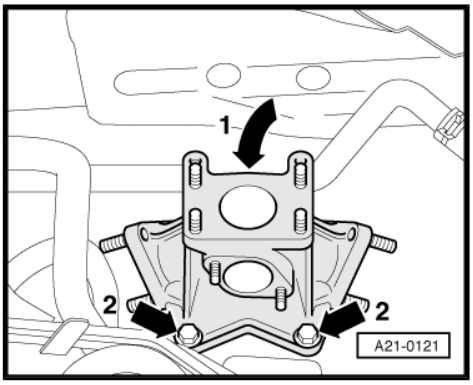

Installing

Installation is carried out in the reverse order; note the following:

Note

- *Renew gaskets, seals and self-locking nuts.*
- *Fit all cable ties in the original positions when installing.*

– Install turbocharger ⇒ page 220 .
– Install exhaust manifold (left-side) together with intermediate pipe: engine code letters AFN, AKN ⇒ page 247 , engine code letters AKE ⇒ page 250 .

Tightening torques

Component		Nm
Intermediate flange to cylinder block		22
Support for intermediate flange to	Gearbox	65
	Intermediate flange	22
Mechanical exhaust gas recirculation valve to intake manifold		22
Pipe for exhaust gas recirculation to	Intermediate flange	22
	Intake manifold (front)	10

3 Charge air cooling

3.1 Removing and installing charge air cooler

Removing

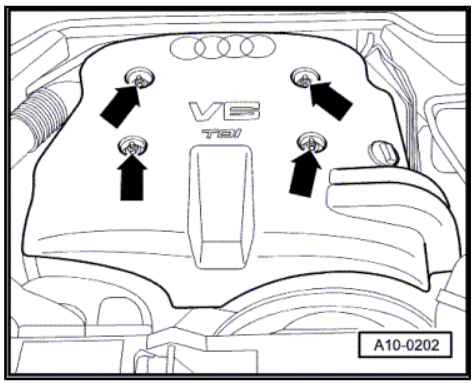

Note

If there are slight impressions on the fins, refer to ⇒ page 5 .

– Remove front bumper ⇒ Rep. Gr. 63 .
– Detach caps on engine cover panel.
– Unbolt and remove engine cover panel -arrows-.

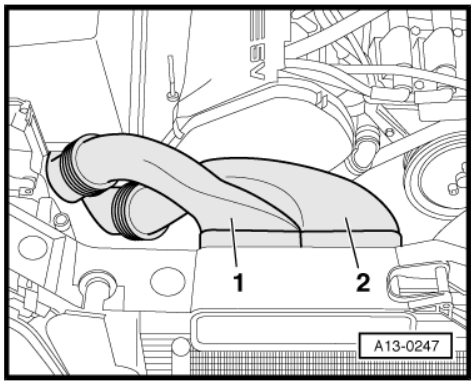

– Remove air ducts -1- and -2-.
– Remove air intake connection (front) from lock carrier.
– Remove air hose (right-side) from charge air cooler.

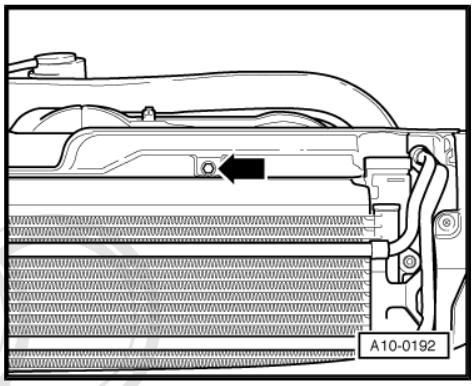

– Unscrew bolt -arrow- from front and remove air duct for viscous fan.
– Remove air hose (left-side) from charge air cooler.

Vehicles up to 11.1998:

– Remove trim strips underneath headlights ⇒ Rep. Gr. 94 .

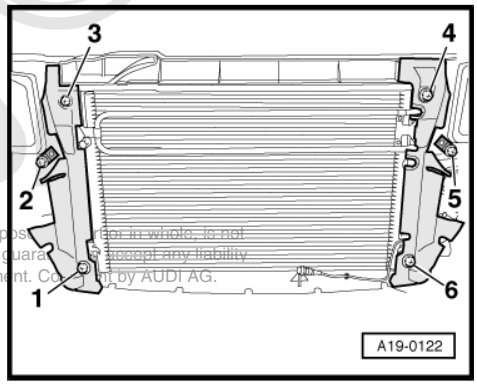

– Unbolt brackets -2- and -5- for trim strips from headlights.

All vehicles (continued):

– Remove air ducts (left-side) -4- and -6- and air ducts (right-side) -1- and -3- from radiator.

Protected by copyright. Copying for private or commercial purposes, in part or in whole, is not permitted unless authorised by AUDI AG. AUDI AG does not guarantee or accept any liability with respect to the correctness of information in this document. Copyright by AUDI AG.

– Remove bolts -1- and -2-.
– Detach cooling pipe for power steering hydraulic fluid and move clear to one side, leaving lines connected.
– Pull out air duct (bottom) -3-.

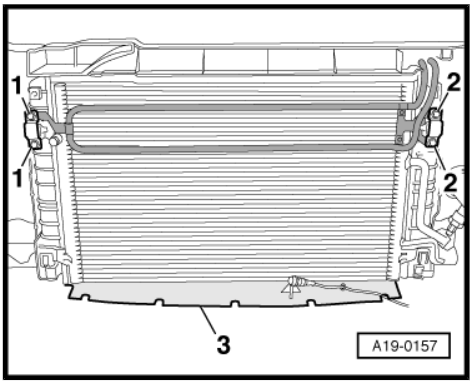

– Unplug electrical connectors -arrows-.

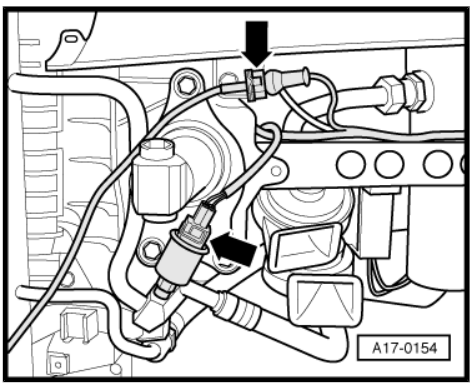

WARNING

Risk of injury caused by refrigerant.

- *The air conditioner refrigerant circuit must not be opened.*

Caution

Make sure that condenser and refrigerant pipes and hoses are not damaged.

- *Do NOT stretch, kink or bend refrigerant lines and hoses.*

– Pull condenser upwards out of brackets, swivel to left side and set down securely.

– Prise off both caps -1- at top of lock carrier.
– Release the two retaining pins -2- for radiator and pull them out upwards -arrows-.
– Detach spacer -3-.

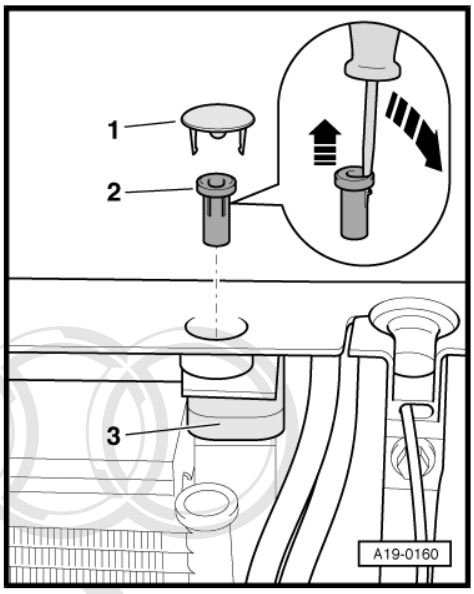

Protected by copyright. Copying for private or commercial purposes, in part or in whole, is not permitted unless authorised by AUDI AG. AUDI AG does not guarantee or accept any liability with respect to the correctness of information in this document. Copyright by AUDI AG.

– Remove the four bolts -arrows- for radiator/charge air cooler (left and right).
– Swivel radiator and charge air cooler forwards.

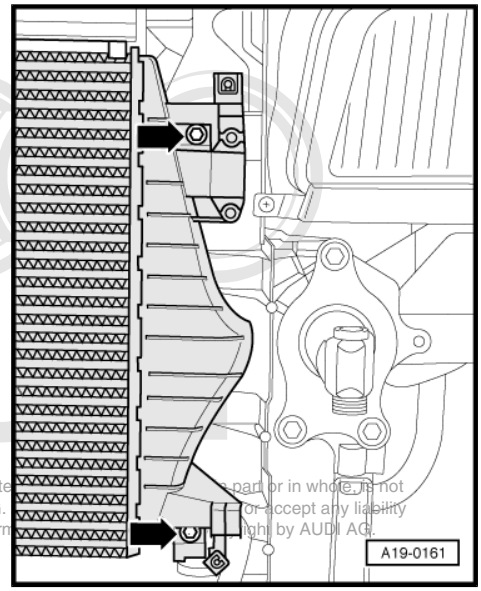

Protected by copyright. Copying for private ... part or in whole is not permitted unless authorised by AUDI AG. ... or accept any liability with respect to the correctness of inform... ...ight by AUDI AG.

– Unclip trim (top) from charge air cooler -arrows-.
– Detach charge air cooler.

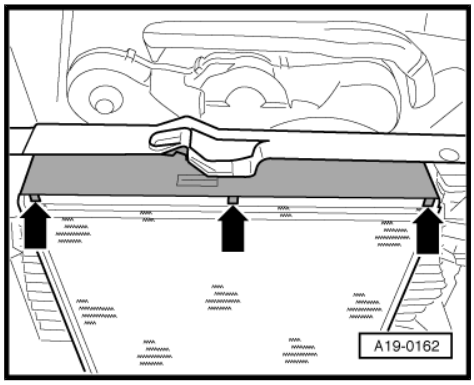

Installing

Installation is carried out in the reverse order; note the following:

Note

- *Hose connections and hoses for charge air system must be free of oil and grease before assembly.*
- *Secure all hose connections with the correct type of hose clips (same as original equipment) ⇒ Electronic parts catalogue .*

– Install front bumper ⇒ Rep. Gr. 63 .

Tightening torques

Component	Nm
Condenser to radiator	10
Charge air cooler to radiator	10

26 – Exhaust system

1 Removing and installing parts of exhaust system

Note

- *After working on the exhaust system, ensure that the system is not under stress and that it has sufficient clearance from the body. If necessary, loosen clamp and align silencers and exhaust pipe so that sufficient clearance is maintained to the body at all points and the mountings are evenly loaded.*
- *Removing and installing underbody cross member*
  ⇒ Fig. " Removing and installing underbody cross member - vehicles up to approx. 11.1998 " , page 234

1.1 Silencers - exploded view

Vehicles with engine code letters AFB, AKN:

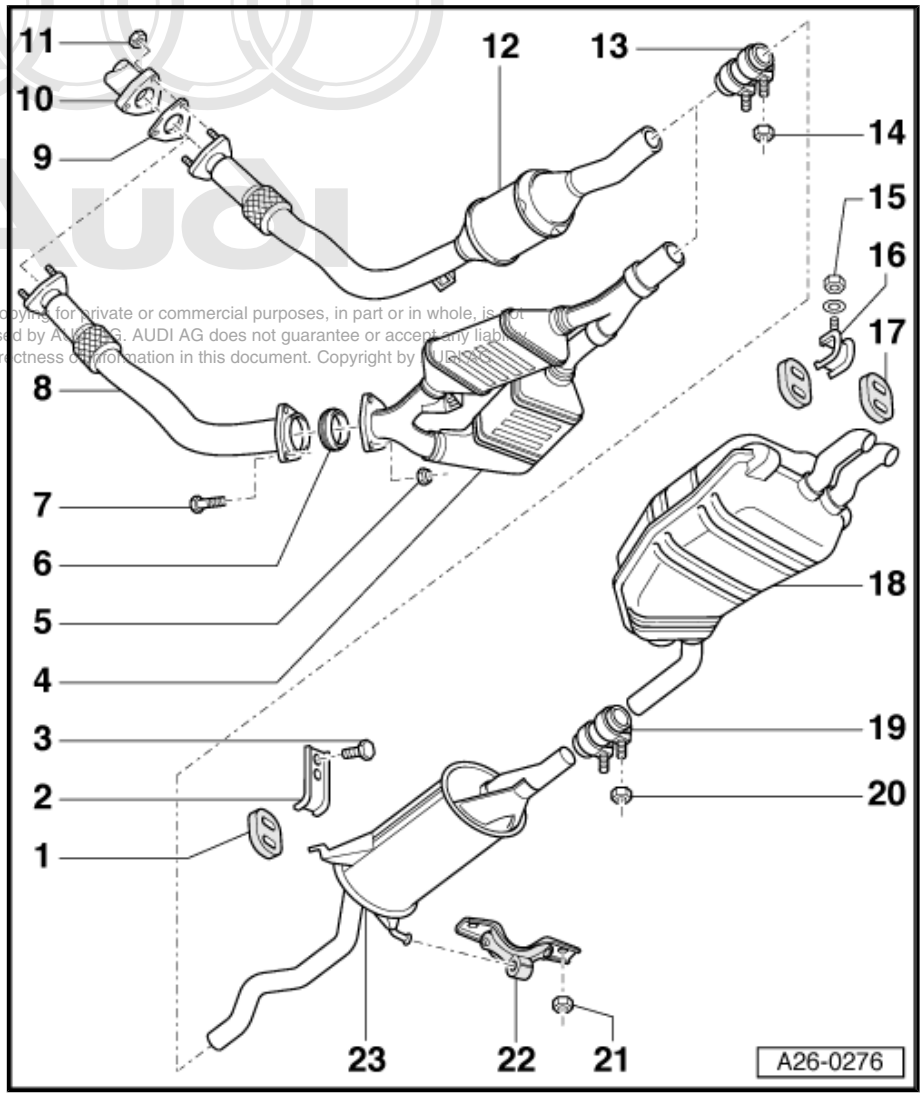

1 - Rubber mounting
- ❑ Check preload
  ⇒ "1.6 Stress-free alignment of exhaust system", page 242

2 - Bracket

3 - Bolt
- ❑ 25 Nm

4 - Oxidising catalytic converters
- ❑ For vehicles with four-wheel drive
- ❑ Protect against knocks and impact
- ❑ Align exhaust system so it is free of stress
  ⇒ page 242
- ❑ Mounting components on vehicles with automatic gearbox
  ⇒ page 234

5 - Nut
- ❑ 25 Nm

6 - Seal
- ❑ Renew if damaged

7 - Bolt
- ❑ 25 Nm

8 - Front exhaust pipe
- ❑ For vehicles with four-wheel drive
- ❑ With flexible joint; do not bend flexible joint more than 10° – otherwise it can be damaged

Copyright by AUDI AG
Copying for private or commercial purposes, in part or in whole, is not permitted unless authorised by AUDI AG. AUDI AG does not guarantee or accept any liability with respect to the correctness of information in this document. Copyright by AUDI AG

- ❑ Protect against knocks and impact
- ❑ Removing and installing ⇒ page 235
- ❑ Align exhaust system so it is free of stress ⇒ page 242

9 - Gasket

- ❑ Renew

10 - Exhaust elbow

11 - Nut

- ❑ 25 Nm

12 - Front exhaust pipe with oxidising catalytic converter

- ❑ For vehicles with front-wheel drive
- ❑ With flexible joint; do not bend flexible joint more than 10° – otherwise it can be damaged
- ❑ Protect against knocks and impact
- ❑ Removing and installing ⇒ page 235
- ❑ Mounting components on vehicles with manual gearbox ⇒ page 233
- ❑ Mounting components on vehicles with automatic gearbox ⇒ page 234
- ❑ Align exhaust system so it is free of stress ⇒ page 242

13 - Clamp (front)

- ❑ Before tightening, align exhaust system so it is free of stress ⇒ page 242
- ❑ Installation position ⇒ page 233
- ❑ Tighten bolt connections evenly

14 - Nut

- ❑ 40 Nm

15 - Nut

- ❑ 25 Nm

16 - Mounting

- ❑ Illustration shows mounting (left-side)

17 - Rubber mounting

- ❑ Check preload ⇒ "1.6 Stress-free alignment of exhaust system", page 242

18 - Rear silencer

- ❑ Combined in one unit with centre silencer as original equipment. Can be renewed individually for repair purposes
- ❑ Cutting point ⇒ page 234
- ❑ Align exhaust system so it is free of stress ⇒ page 242

19 - Clamp (rear)

- ❑ For separate replacement of centre and rear silencers
- ❑ Before tightening, align exhaust system so it is free of stress ⇒ page 242
- ❑ Installation position ⇒ page 233
- ❑ Tighten bolt connections evenly

Protected by copyright. Copying for private or commercial purposes, in part or in whole, is not permitted unless authorised by AUDI AG. AUDI AG does not guarantee or accept any liability with respect to the correctness of information in this document. Copyright by AUDI AG.

20 - Nut

- ❑ 40 Nm

21 - Nut

- ❑ 25 Nm

22 - Mounting

- ❑ Renew if damaged

23 - Centre silencer

- ❑ Combined in one unit with rear silencer as original equipment. Can be renewed individually for repair purposes

- ❑ Cutting point ⇒ page 234
- ❑ Align exhaust system so it is free of stress ⇒ page 242
- ❑ Distance to cross member for seat ⇒ page 233
- ❑ Distance to cross member for underbody ⇒ page 233

Vehicles with engine code letters AKE:

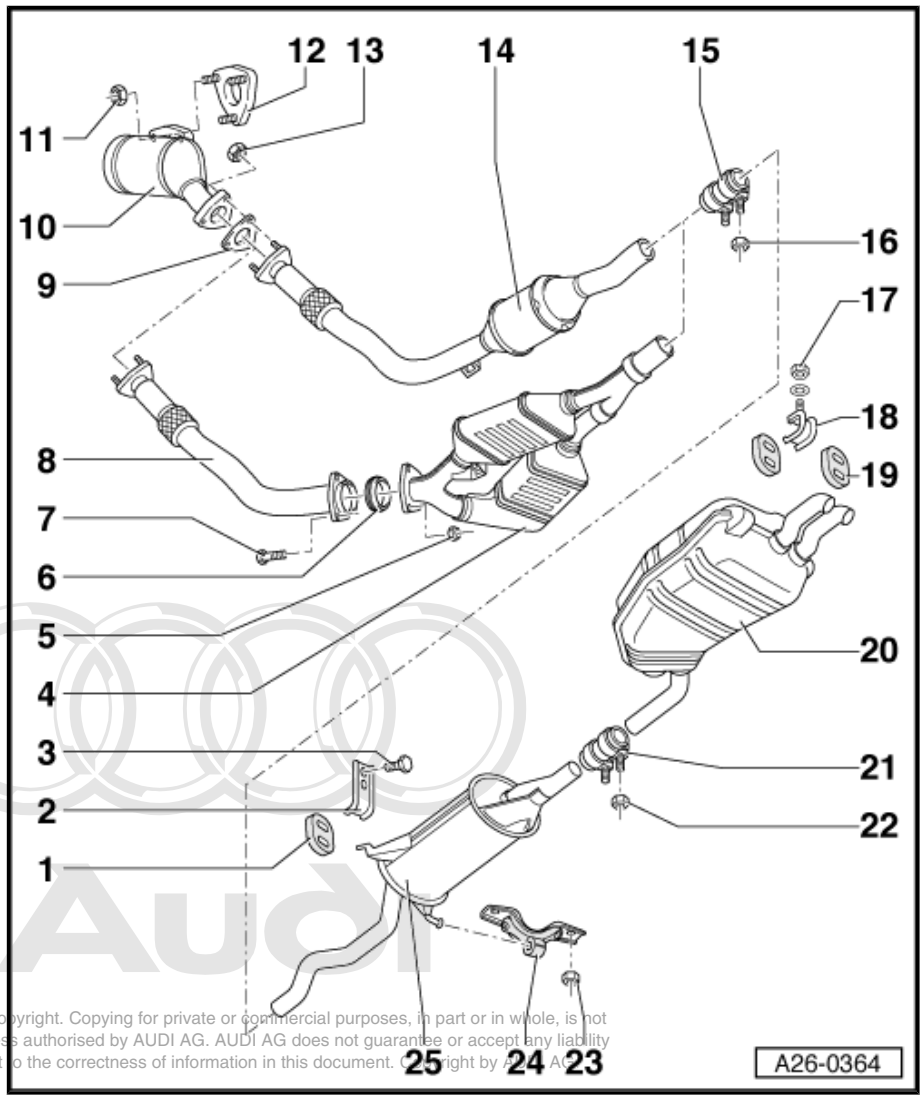

Protected by copyright. Copying for private or commercial purposes, in part or in whole, is not permitted unless authorised by AUDI AG. AUDI AG does not guarantee or accept any liability with respect to the correctness of information in this document. Copyright by AUDI AG.

1 - Rubber mounting
- ❑ Check preload ⇒ "1.6 Stress-free alignment of exhaust system", page 242

2 - Bracket

3 - Bolt
- ❑ 25 Nm

4 - Oxidising catalytic converters
- ❑ For vehicles with four-wheel drive
- ❑ Protect against knocks and impact
- ❑ Align exhaust system so it is free of stress ⇒ page 242
- ❑ Mounting components on vehicles with automatic gearbox ⇒ page 234

5 - Nut
- ❑ 25 Nm

6 - Seal
- ❑ Renew if damaged

7 - Bolt
- ❑ 25 Nm

8 - Front exhaust pipe
- ❑ For vehicles with four-wheel drive
- ❑ With flexible joint, do not bend flexible joint more than 10° – otherwise it can be damaged
- ❑ Protect against knocks and impact
- ❑ Removing and installing ⇒ page 235
- ❑ Align exhaust system so it is free of stress ⇒ page 242

9 - Gasket
- ❑ Renew

10 - Starter catalytic converter
- ❑ Removing and installing ⇒ page 237

11 - Nut
- ❑ 25 Nm

12 - Turbocharger

13 - Nut

- ❑ 25 Nm

14 - Front exhaust pipe with oxidising catalytic converter

- ❑ For vehicles with front-wheel drive
- ❑ With flexible joint; do not bend flexible joint more than 10° – otherwise it can be damaged
- ❑ Protect against knocks and impact
- ❑ Removing and installing ⇒ page 240
- ❑ Mounting components on vehicles with manual gearbox ⇒ page 233
- ❑ Mounting components on vehicles with automatic gearbox ⇒ page 234
- ❑ Align exhaust system so it is free of stress ⇒ page 242

15 - Clamp (front)

- ❑ Before tightening, align exhaust system so it is free of stress ⇒ page 242
- ❑ Installation position ⇒ page 233
- ❑ Tighten bolt connections evenly

16 - Nut

- ❑ 40 Nm

17 - Nut

- ❑ 25 Nm

18 - Mounting

- ❑ Illustration shows mounting (left-side)

19 - Rubber mounting

- ❑ Check preload ⇒ “1.6 Stress-free alignment of exhaust system”, page 242

20 - Rear silencer

- ❑ Combined in one unit with centre silencer as original equipment. Can be renewed individually for repair purposes
- ❑ Cutting point ⇒ page 234
- ❑ Align exhaust system so it is free of stress ⇒ page 242

21 - Clamp (rear)

- ❑ For separate replacement of centre and rear silencers
- ❑ Before tightening, align exhaust system so it is free of stress ⇒ page 242
- ❑ Installation position ⇒ page 233
- ❑ Tighten bolt connections evenly

22 - Nut

- ❑ 40 Nm

23 - Nut

- ❑ 25 Nm

24 - Mounting

- ❑ Renew if damaged

25 - Centre silencer

- ❑ Combined in one unit with rear silencer as original equipment. Can be renewed individually for repair purposes
- ❑ Cutting point ⇒ page 234
- ❑ Align exhaust system so it is free of stress ⇒ page 242
- ❑ Distance to cross member for seat ⇒ page 233
- ❑ Distance to cross member for underbody ⇒ page 233

Protected by copyright. Copying for private or commercial purposes, in part or in whole, is not permitted unless authorised by AUDI AG. AUDI AG does not guarantee or accept any liability with respect to the correctness of information in this document. Copyright by AUDI AG.

Distance from centre silencer to cross member for seat

- Distance -a- = 19 ± 3 mm.

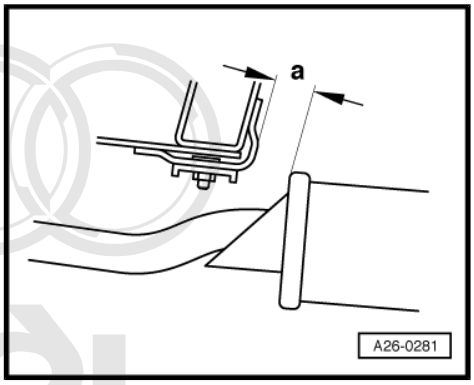

Distance from exhaust pipes to cross member for underbody - vehicles up to approx. 11.1998

Protected by copyright. Copying for private or commercial purposes, in part or in whole, is not permitted unless authorised by AUDI AG. AUDI AG does not guarantee or accept any liability with respect to the correctness of information in this document. Copyright by AUDI AG.

– Check distance -a- from exhaust pipes to cross member -1- for underbody.

- Vehicles with front-wheel drive: distance -a- = 31.5 mm.
- Vehicles with four-wheel drive: distance -a- = 29.5 mm.

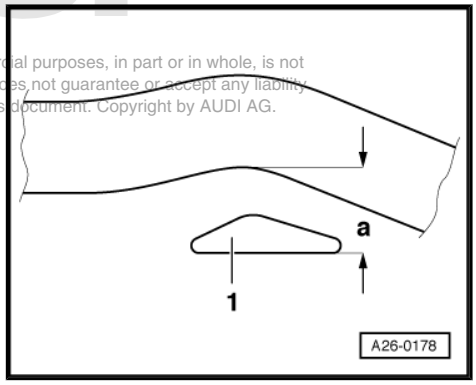

Installation position of clamps (front and rear)

– Install clamps so that end of bolt -arrow- does not protrude below bottom of clamp.

- Bolt connection faces to right.

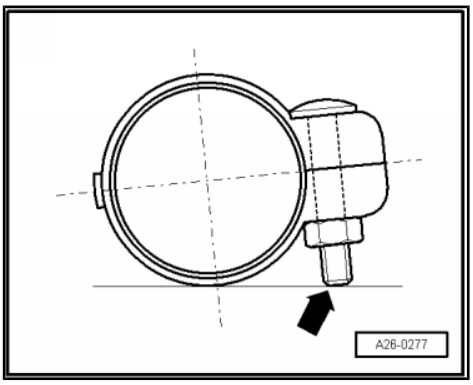

Components of exhaust pipe mountings (vehicles with front-wheel drive and manual gearbox)

1 - Bolt, 25 Nm
2 - Bracket
3 - Nut, self-locking, 25 Nm
4 - Bolt, 25 Nm
5 - Spacer
6 - Bolt, 25 Nm
7 - Washer
8 - Compression spring
9 - Buffer
10 - Plate
11 - Spacer sleeve

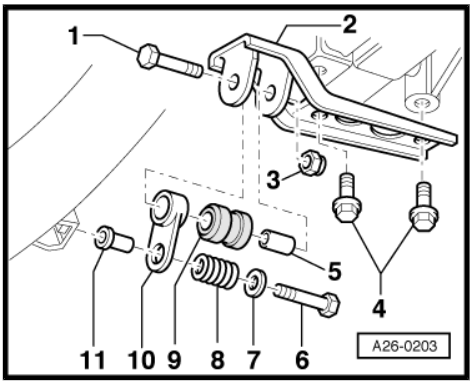

Components of exhaust pipe mountings (vehicles with front-wheel drive and automatic gearbox)

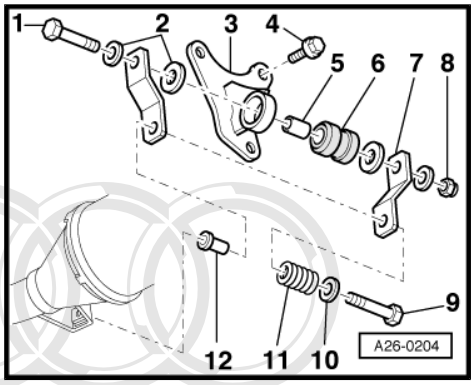

1 - Bolt, 25 Nm
2 - Washers
3 - Bracket
4 - Bolt, 25 Nm
5 - Spacer
6 - Buffer
7 - Plate
8 - Nut, self-locking, 25 Nm
9 - Bolt, 25 Nm
10 - Washer
11 - Compression spring
12 - Spacer sleeve

Protected by copyright. Copying for private or commercial purposes, in part or in whole, is not permitted unless authorised by AUDI AG. AUDI AG does not guarantee or accept any liability with respect to the correctness of information in this document. Copyright by AUDI AG.

Components of exhaust pipe mountings (vehicles with four-wheel drive and automatic gearbox)

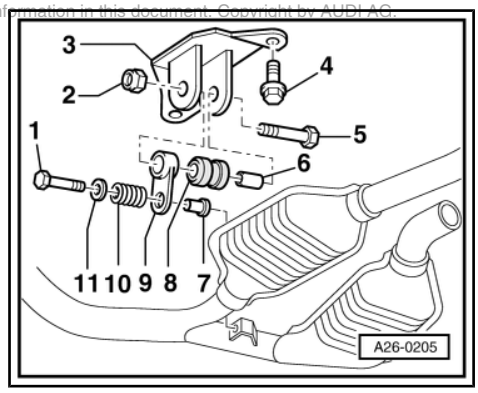

1 - Bolt, 25 Nm
2 - Nut, self-locking, 25 Nm
3 - Bracket
4 - Bolt, 25 Nm
5 - Bolt, 25 Nm
6 - Spacer
7 - Spacer sleeve
8 - Buffer
9 - Plate
10 - Compression spring
11 - Washer

Removing and installing underbody cross member - vehicles up to approx. 11.1998

- Tightening torque: 25 Nm.

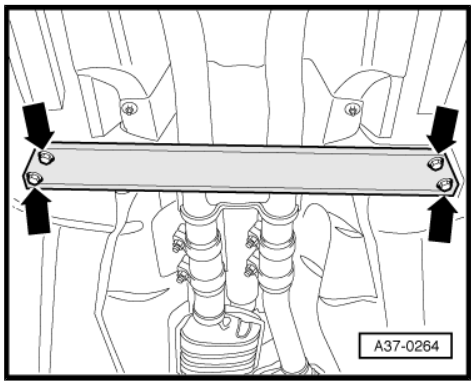

1.2 Separating centre and rear silencers

- The connecting pipe can be cut through at the cutting point in order to renew the centre and rear silencers separately.
- The cutting point is marked by an indentation on the outside of the exhaust pipe.

Special tools and workshop equipment required

♦ Chain-type pipe cutter -VAS 6254-

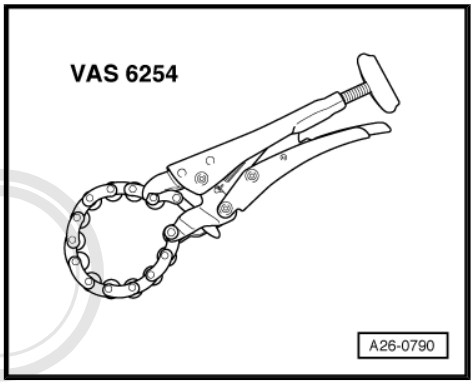

Procedure

– Cut through exhaust pipe at right angle at the position marked by -arrows- using chain-type pipe cutter -VAS 6254- .

– When installing, position clamp centrally over cutting point.

Protected by copyright. Copying for private or commercial purposes, in part or in whole, is not permitted unless authorised by AUDI AG. AUDI AG does not guarantee or accept any liability with respect to the correctness of information in this document. Copyright © AUDI AG

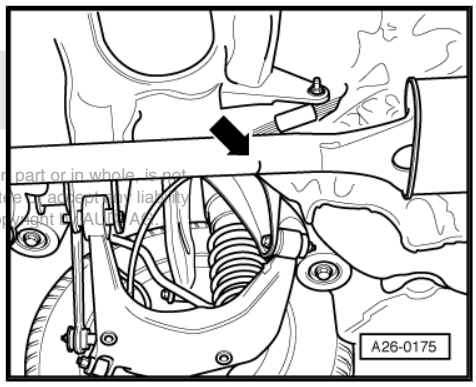

– Install clamp so that end of bolt -arrow- does not protrude below bottom of clamp.

• Bolt connection faces to right.

– Align the exhaust system so it is free of stress ⇒ page 242 .

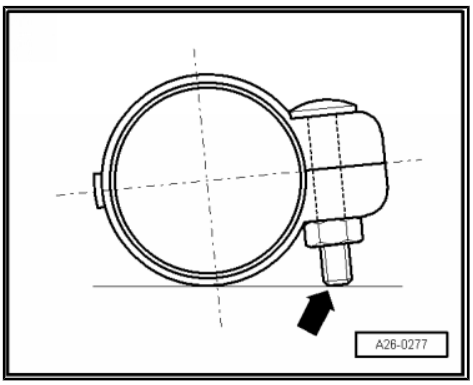

1.3 Removing and installing front exhaust pipe with catalytic converter

Removing

– Detach caps on engine cover panel.

– Unbolt and remove engine cover panel -arrows-.

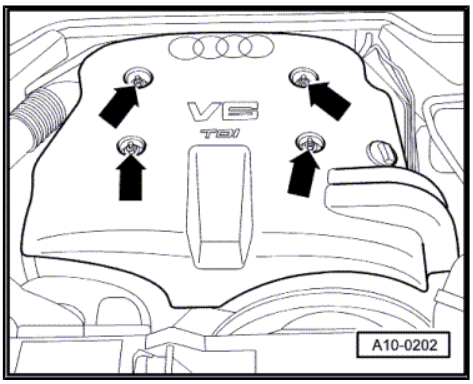

– Remove heat shield above turbocharger -arrows-.

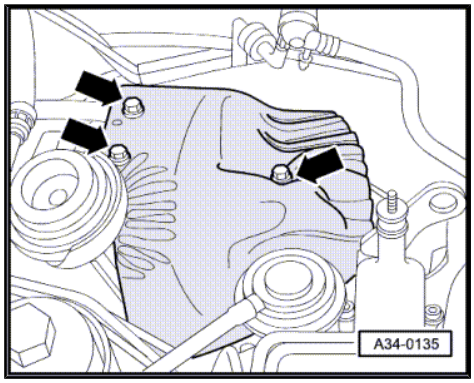

– Unbolt front exhaust pipe from connection for turbocharger -arrows-.

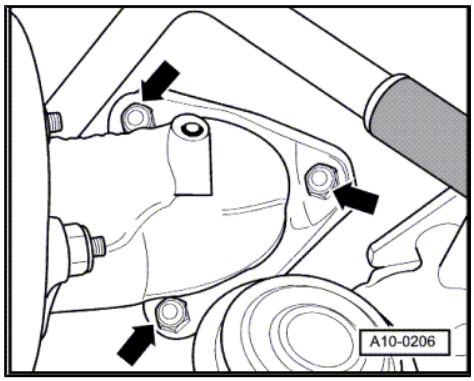

– Open quick-release fasteners -2- and remove rear noise insulation.

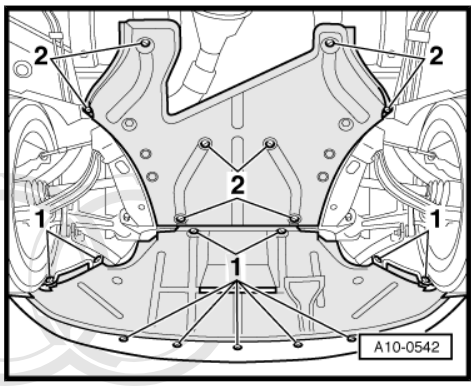

Protected by copyright. Copying for private or commercial purposes, in part or in whole, is not permitted unless authorised by AUDI AG. AUDI AG does not guarantee or accept any liability with respect to the correctness of information in this document. Copyright by AUDI AG.

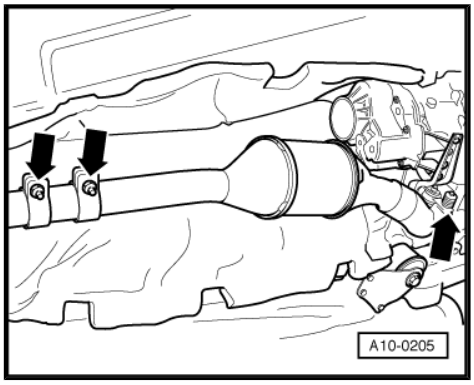

Caution

Risk of damage to flexible joints in front exhaust pipe

- *Do not bend flexible joints in front exhaust pipe more than 10°.*

– Remove front exhaust pipe together with catalytic converter -arrows-.

Note

Illustration shows vehicle with front-wheel drive.

Installing

Installation is carried out in the reverse order; note the following:

Note

Renew gaskets and self-locking nuts.

– Align the exhaust system so it is free of stress ⇒ page 242 .

Note

Components of exhaust system mountings on gearbox: vehicles with front-wheel drive and manual gearbox ⇒ page 233 , vehicles with front-wheel drive and automatic gearbox ⇒ page 234 , vehicles with four-wheel drive and automatic gearbox ⇒ page 234 .

Protected by copyright. Copying for private or commercial purposes, in part or in whole, is not permitted unless authorised by AUDI AG. AUDI AG does not guarantee or accept any liability with respect to the correctness of information in this document. Copyright by AUDI AG.

Tightening torques

Component		Nm
Front exhaust pipe with catalytic converter to:	Turbocharger	25
	Mounting plate	25
Heat shield to turbocharger		10

1.4 Removing and installing starter catalytic converter - engine code letters AKE

Removing

– Detach caps on engine cover panel.

– Unbolt and remove engine cover panel -arrows-.

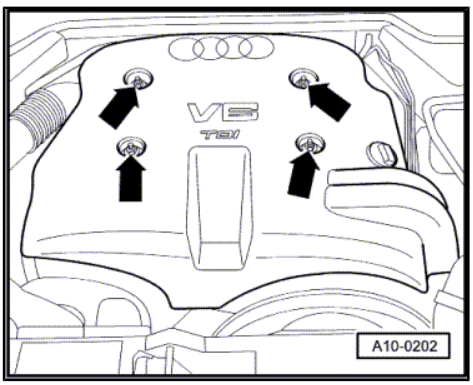

– Remove heat shield above turbocharger -arrows-.

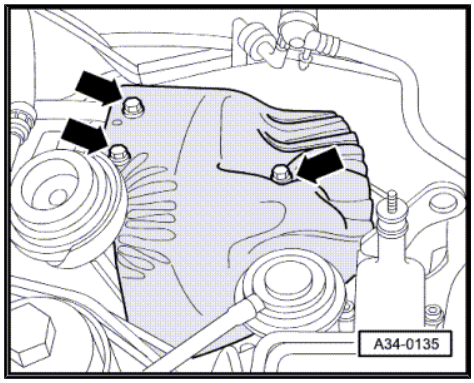

– Remove bolts -arrows- securing exhaust pipe for auxiliary/ supplementary heater to noise insulation.

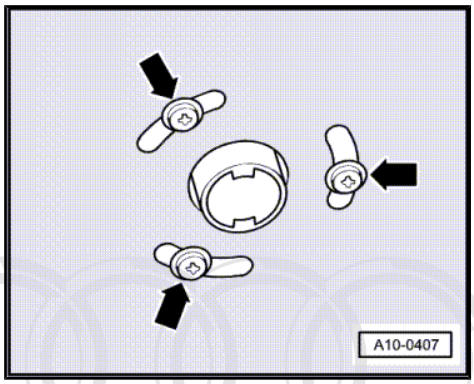

– Release quick-release fasteners -1- and -2- and take off front and rear noise insulation.

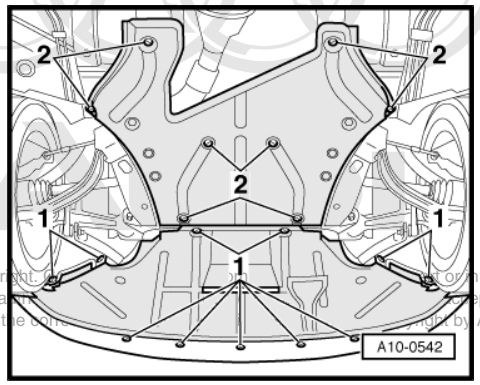

Protected by copyright. Copying, distribution and publication in whole or in whole, is not permitted unless authorized by AUDI AG. AUDI AG does not accept any liability with respect to the correctness of information in this document.

– Remove noise insulation above drive shaft (left-side) -arrows-.

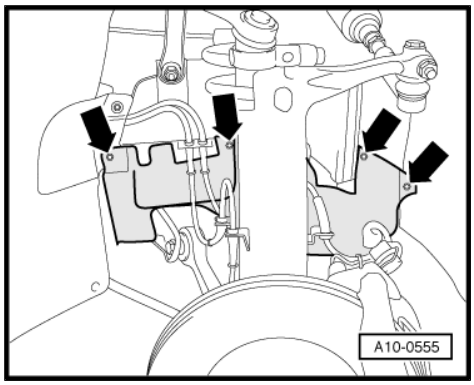

– Detach heat shield for drive shaft (left-side) -1- from gearbox -arrows-.

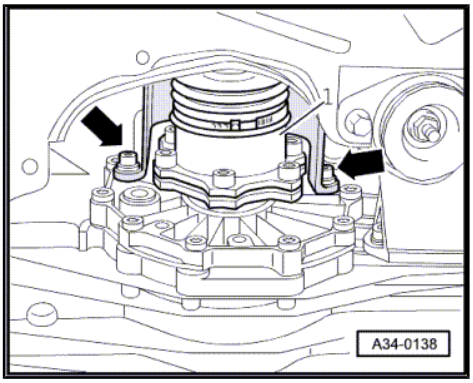

– Unbolt front exhaust pipe from starter catalytic converter -1-.

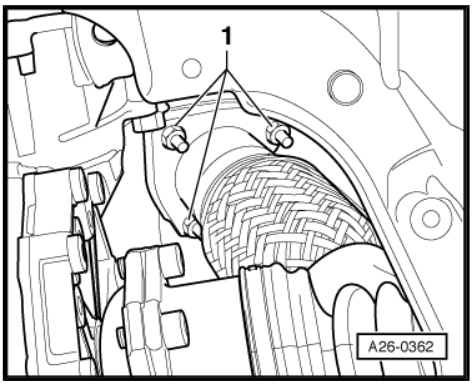

– Remove catalytic converters from gearbox mounting -2-.

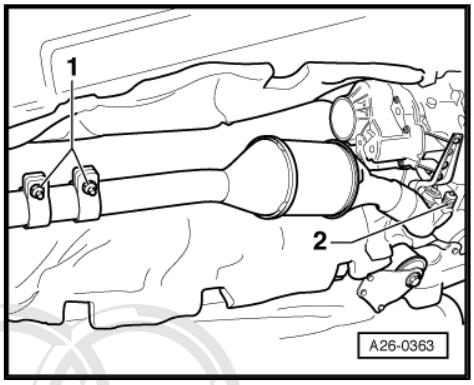

Note

Illustration shows vehicle with front-wheel drive.

– Remove heat shield above turbocharger -arrows-.

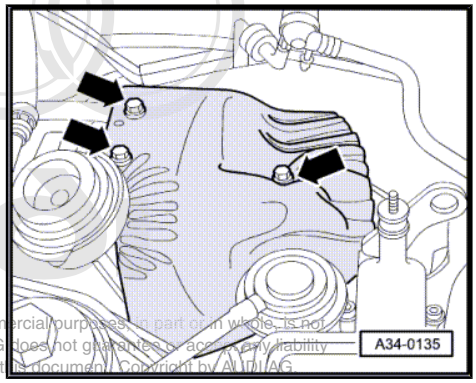

Protected by copyright. Copying for private or commercial purposes, in part or in whole, is not permitted unless authorised by AUDI AG. AUDI AG does not guarantee or accept any liability with respect to the correctness of information in this document. Copyright by AUDI AG.

– Unscrew nuts -1- and lift out starter catalytic converter.

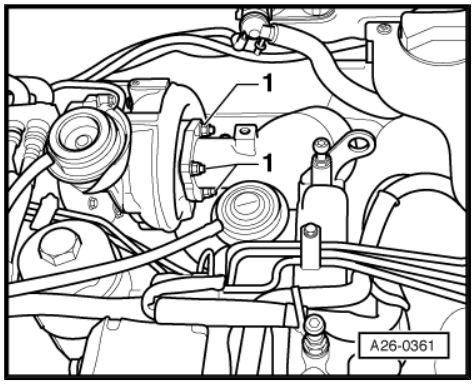

Installing

Installation is carried out in the reverse order; note the following:

Note

Renew gaskets and self-locking nuts.

– Align the exhaust system so it is free of stress ⇒ page 242 .

Note

Components of exhaust system mountings on gearbox: vehicles with front-wheel drive and manual gearbox ⇒ page 233 , vehicles with front-wheel drive and automatic gearbox ⇒ page 234 , vehicles with four-wheel drive and automatic gearbox ⇒ page 234 .

Tightening torques

Component	Nm
Catalytic converter with front exhaust pipe to starter catalytic converter	25
Starter catalytic converter to turbocharger	25
Heat shield to turbocharger	10
Shield for drive shaft to gearbox	25

1.5 Removing and installing front exhaust pipe with catalytic converter - engine code letters AKE

Removing

– Remove bolts -arrows- securing exhaust pipe for auxiliary/ supplementary heater to noise insulation.

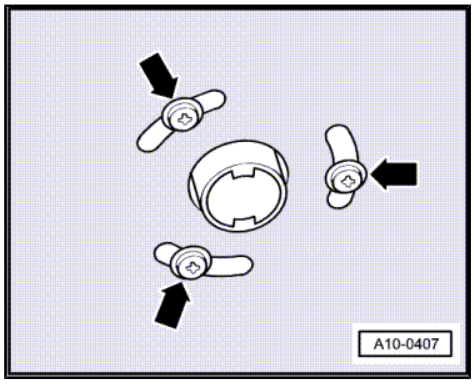

– Release quick-release fasteners -1- and -2- and take off front and rear noise insulation.

Protected by copyright. Copying for private or commercial purposes, in part or in whole, is not permitted unless authorised by AUDI AG. AUDI AG does not guarantee or accept any liability with respect to the correctness of information in this document. Copyright by AUDI AG

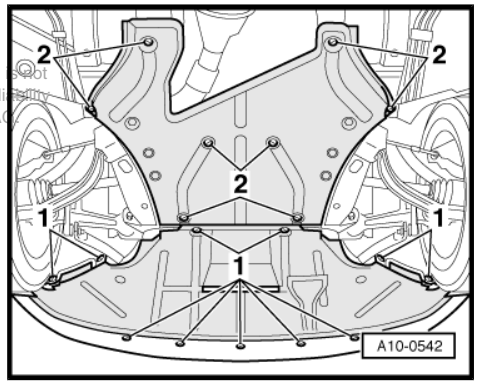

– Remove noise insulation above drive shaft (left-side) -arrows-.

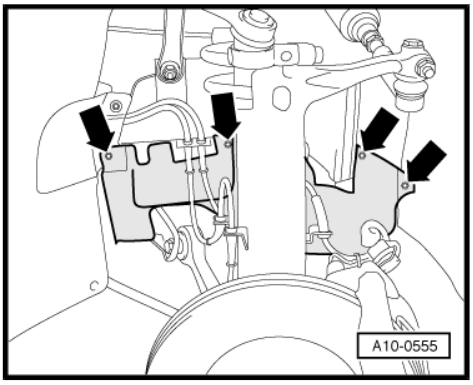

– Detach heat shield for drive shaft (left-side) -1- from gearbox -arrows-.

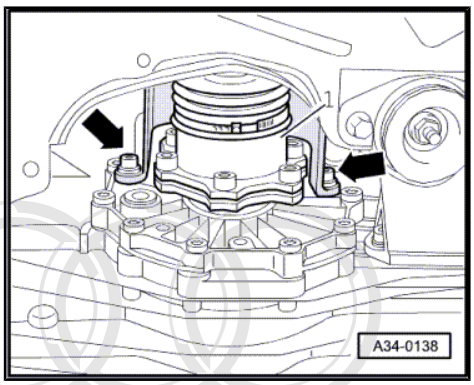

– Unbolt front exhaust pipe from starter catalytic converter -1-.

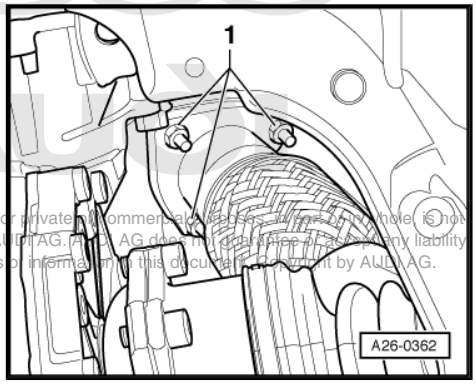

Protected by copyright. Copying for private or commercial purposes, in part or in whole, is not permitted unless authorised by AUDI AG. AUDI AG does not guarantee or assume any liability with respect to the correctness of information in this document. Copyright by AUDI AG.

Caution

Risk of damage to flexible joints in front exhaust pipe

- *Do not bend flexible joints in front exhaust pipe more than 10°.*

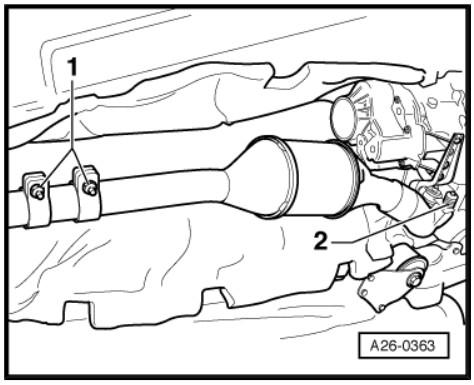

– Loosen nuts -arrows- and push clamp towards rear.
– Remove catalytic converter from gearbox mounting -2-.
– Detach front exhaust pipe with catalytic converter.

Installing

Installation is carried out in the reverse order; note the following:

Note

Renew gaskets and self-locking nuts.

– Align the exhaust system so it is free of stress ⇒ page 242 .

Note

Components of exhaust system mountings on gearbox: vehicles with front-wheel drive and manual gearbox ⇒ page 233 , vehicles with front-wheel drive and automatic gearbox ⇒ page 234 , vehicles with four-wheel drive and automatic gearbox ⇒ page 234 .

Tightening torque

Component	Nm
Catalytic converter with front exhaust pipe to starter catalytic converter	25
Heat shield to turbocharger	10
Shield for drive shaft to gearbox	25

Protected by copyright. Copying for private or commercial purposes, in part or in whole, is not permitted unless authorised by AUDI AG. AUDI AG does not guarantee or accept any liability with respect to the correctness of information in this document. Copyright by AUDI AG.

1.6 Stress-free alignment of exhaust system

- The exhaust system must be aligned when it is cool.
– Check installation position of mounting plate at gearbox:
- Distance -a- = 4.5 mm.

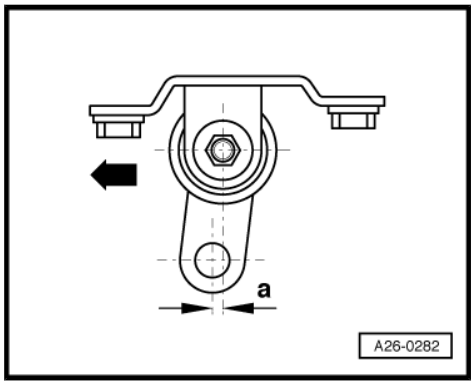

Note

Arrow points in direction of travel.

Vehicles without clamp between centre silencer and rear silencer

– Loosen bolt connections for clamps ⇒ Item 13 (page 230) .

– Push exhaust system towards front of vehicle -arrow- until mounting (rear left) for rear silencer is preloaded by -a- = 10 mm.

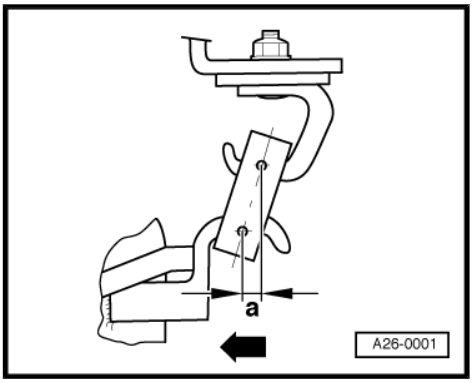

– Align rear silencer so it is horizontal.
– Check clearance between tailpipes and bumper:
• Distance -a- is the same on both sides.
– Tighten bolt connections of clamps ⇒ Item 13 (page 230) evenly to 40 Nm.

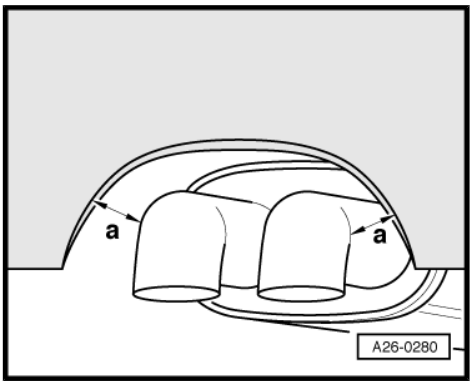

– Check distance from centre silencer to cross member for seat.
• Distance -a- = 19 ± 3 mm.

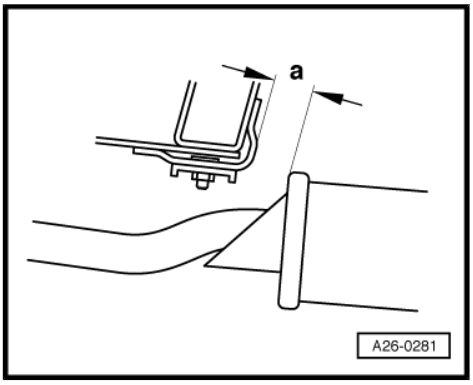

Vehicles up to approx. 11.1998:

– Check distance from exhaust pipes to cross member -1- for underbody.
• Vehicles with front-wheel drive: distance -a- = 31.5 mm.
• Vehicles with four-wheel drive: distance -a- = 29.5 mm.

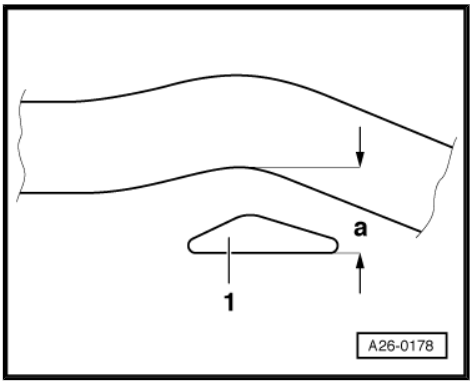

Protected by copyright. Copying for private or commercial purposes, in part or in whole, is not permitted unless authorised by AUDI AG. AUDI AG does not guarantee or assume any liability with respect to the correctness of information in this document. Copyright by AUDI AG.

Vehicles with clamp between centre silencer and rear silencer

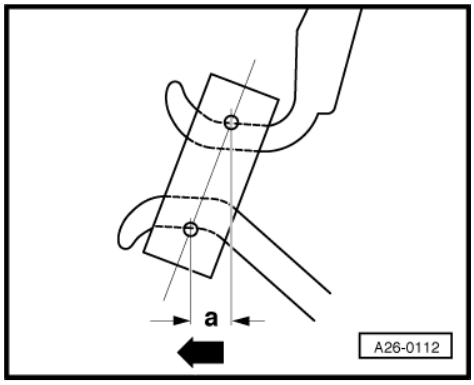

Note

On vehicles with clamp fitted between centre silencer and rear silencer, it is also necessary to align the centre silencer.

– Loosen bolts on clamps ⇒ Item 13 (page 230) and ⇒ Item 19 (page 230) .

– Push exhaust system towards front of vehicle -arrow- so that rubber mounting (front left) on centre silencer is preloaded by -a- = 10 mm.

– Tighten bolt connections of front clamp ⇒ Item 13 (page 230) evenly to 40 Nm.

– Push rear silencer towards front of vehicle -arrow- until mounting (rear left) for rear silencer is preloaded by -a- = 10 mm.

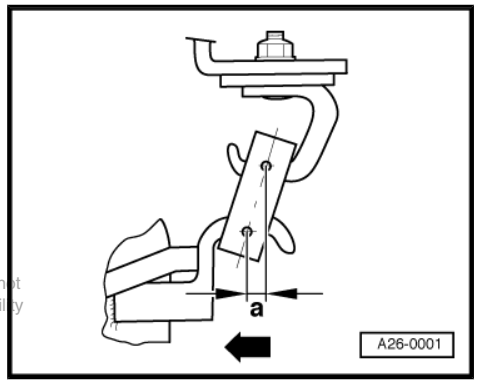

Protected by copyright. Copying for private or commercial purposes, in part or in whole, is not permitted unless authorised by AUDI AG. AUDI AG does not guarantee or accept any liability with respect to the correctness of information in this document. Copyright by AUDI AG.

– Align rear silencer so it is horizontal.

– Check clearance between tailpipes and bumper:

• Distance -a- is the same on both sides.

– Tighten bolt connections for rear clamp ⇒ Item 19 (page 230) evenly to 40 Nm.

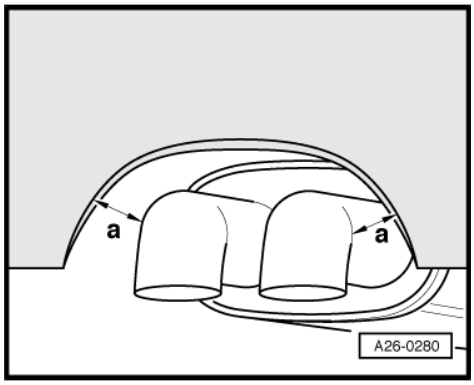

– Check distance from centre silencer to cross member for seat.

• Distance -a- = 19 ± 3 mm.

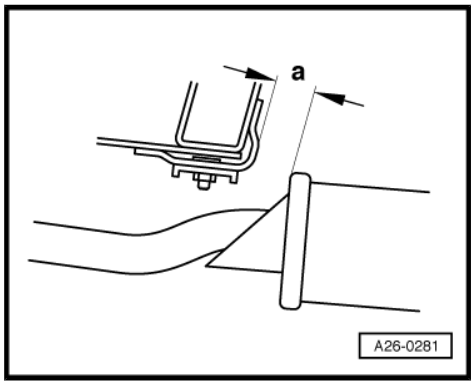

Vehicles up to approx. 11.1998:

– Check distance from exhaust pipes to cross member -1- for underbody.

• Vehicles with front-wheel drive: distance -a- = 31.5 mm.

• Vehicles with four-wheel drive: distance -a- = 29.5 mm.

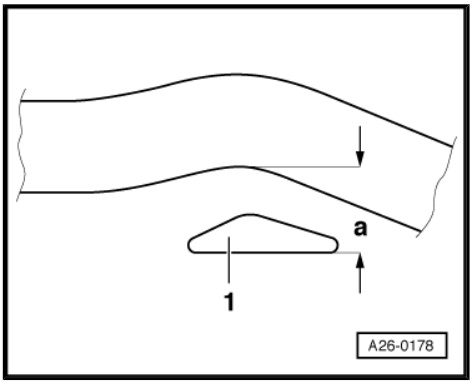

1.7 Checking exhaust system for leaks

– Start engine and run at idling speed.

– Seal tailpipes during leak test, e.g. with cloth or plug.

– Listen for leaks at connection points between cylinder head/ exhaust manifold, exhaust manifold/turbocharger and turbo-charger/catalytic converter etc.

– Rectify any leaks that are found.

Protected by copyright. Copying for private or commercial purposes, in part or in whole, is not permitted unless authorised by AUDI AG. AUDI AG does not guarantee or accept any liability with respect to the correctness of information in this document. Copyright by AUDI AG.

2 Exhaust manifold

2.1 Exhaust manifold with intermediate pipe - exploded view

Note

Illustration shows exhaust manifold of cylinder bank (left-side) with intermediate pipe.

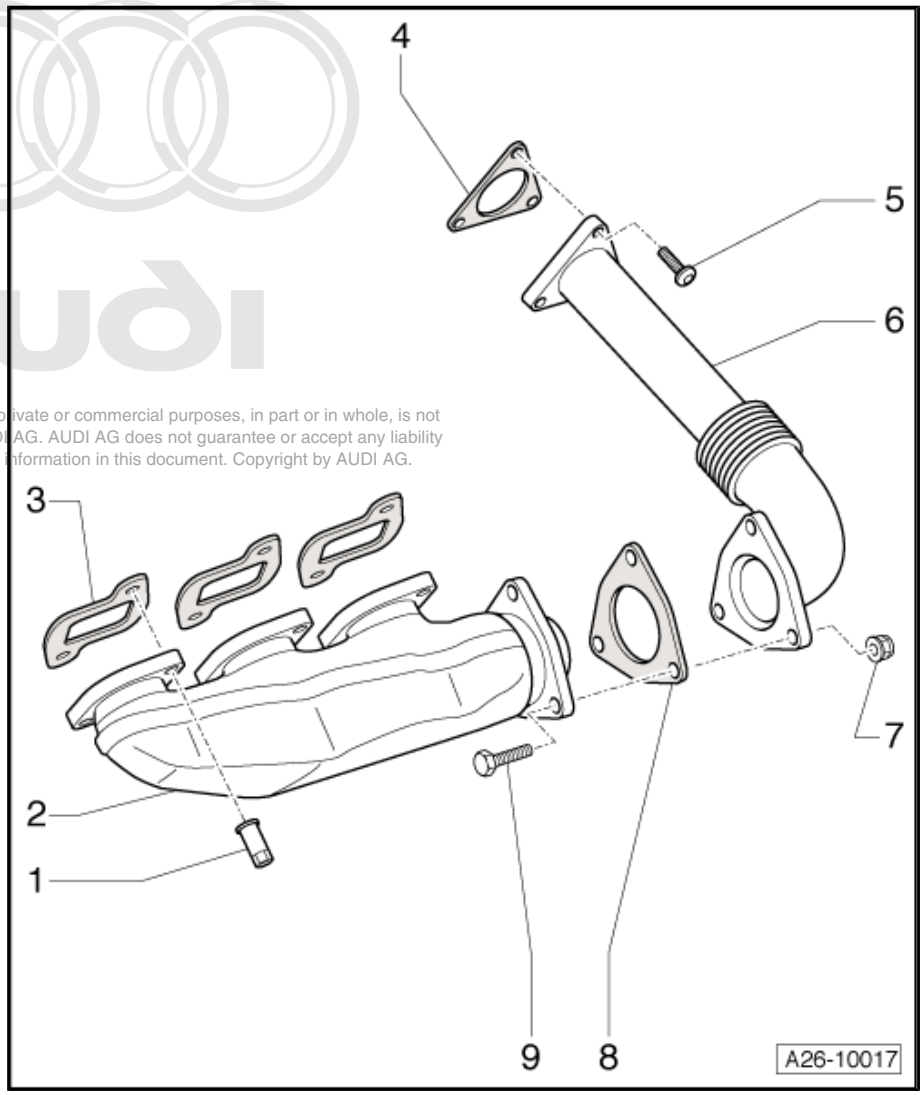

Protected by copyright. Copying for private or commercial purposes, in part or in whole, is not permitted unless authorised by AUDI AG. AUDI AG does not guarantee or accept any liability with respect to the correctness of information in this document. Copyright by AUDI AG.

1 - 25 Nm
- ❑ Renew
- ❑ Coat with high-temperature paste; for high-temperature paste refer to ⇒ Electronic parts catalogue

2 - Exhaust manifold
- ❑ Removing and installing: left-side (engine code letters AFB, AKN) ⇒ page 247 , left-side (engine code letters AKE) ⇒ page 250 , right-side ⇒ page 254

3 - Gasket
- ❑ Renew

4 - Not fitted

5 - Nut
- ❑ On more recent versions: bolt
- ❑ Renew
- ❑ Coat with high-temperature paste; for high-temperature paste refer to ⇒ Electronic parts catalogue
- ❑ 25 Nm

6 - Intermediate pipe
- ❑ Removing and installing: left-side ⇒ page 247 , right-side ⇒ page 254

7 - Nut
- ❑ Renew
- ❑ Coat with high-temperature paste; for high-temperature paste refer to ⇒ Electronic parts catalogue
- ❑ 22 Nm

8 - Gasket
- ❑ Renew

9 - Bolt

2.2 Removing and installing exhaust manifold (left-side) with intermediate pipe - engine code letters AFB, AKN

Removing

Note

The exhaust manifold (left-side) can only be removed together with the intermediate pipe (left-side).

– Detach caps on engine cover panel.

– Unbolt and remove engine cover panel -arrows-.

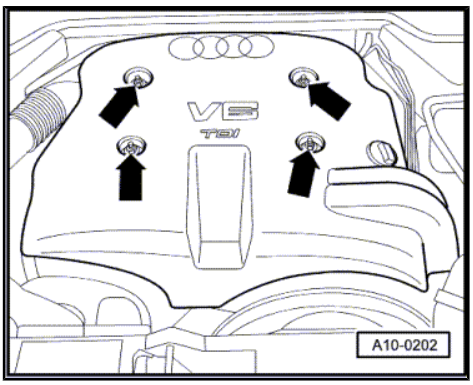

– Remove heat shield above turbocharger -arrows-.

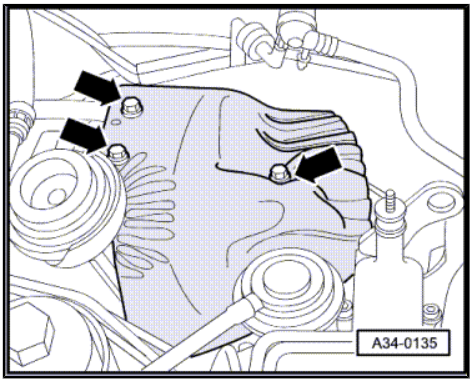

– Unbolt front exhaust pipe from connection for turbocharger -arrows-.

– Remove poly V-belt for air conditioner compressor ⇒ page 35 .

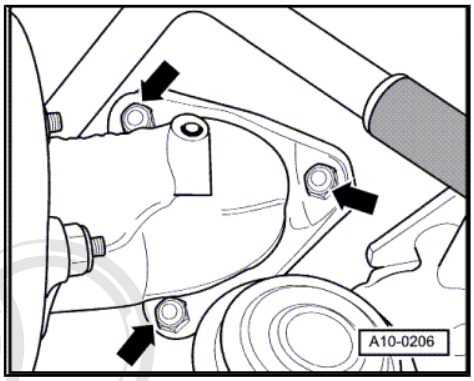

– Remove bolts -arrows- securing exhaust pipe for auxiliary/ supplementary heater to noise insulation.

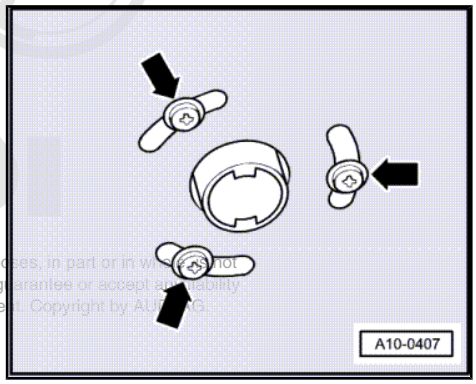

Protected by copyright. Copying for private or commercial purposes, in part or in whole, is not permitted unless authorised by AUDI AG. AUDI AG does not guarantee or accept any liability with respect to the correctness of information in this document. Copyright by AUDI AG.

– Release quick-release fasteners -1- and -2- and take off front and rear noise insulation.
– On vehicles with automatic gearbox, unscrew bracket for ATF lines.

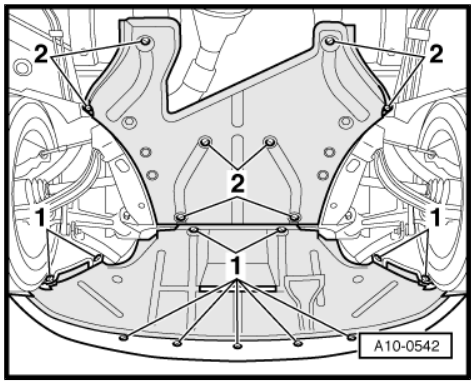

WARNING

Risk of injury caused by refrigerant.

- *The air conditioner refrigerant circuit must not be opened.*

– Unbolt air-conditioner compressor from bracket -arrows-.

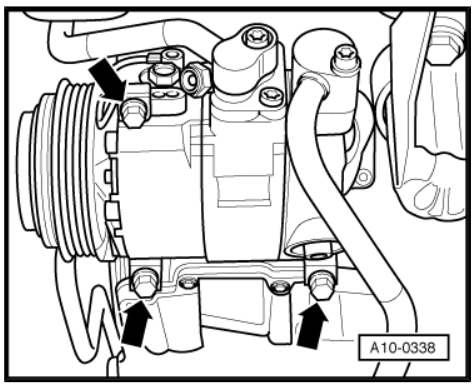

Caution

Danger of damage to refrigerant lines and hoses.

- *Do NOT stretch, kink or bend refrigerant lines and hoses.*

– Tie air conditioner compressor up to side at body longitudinal member (leave hoses connected).

Caution

Risk of damage to flexible joints in front exhaust pipe

- *Do not bend flexible joints in front exhaust pipe more than 10°.*

– Remove front exhaust pipe together with catalytic converter -arrows-.

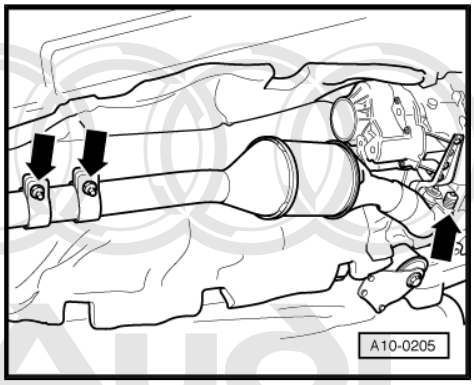

Note

Illustration shows vehicle with front-wheel drive.

Protected by copyright. Copying for private or commercial purposes, in part or in whole, is not permitted unless authorised by AUDI AG. AUDI AG does not guarantee or accept any liability with respect to the correctness of information in this document. Copyright by AUDI AG.

– Remove noise insulation above drive shaft (left-side) -arrows-.

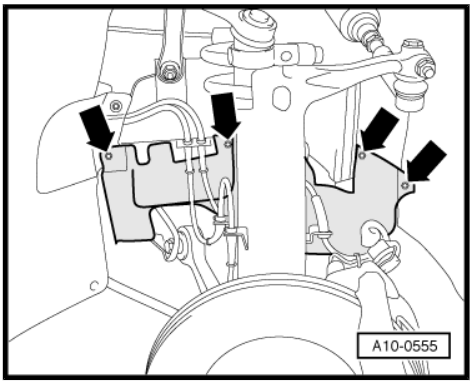

– Detach heat shield for drive shaft (left-side) -1- from gearbox -arrows-.

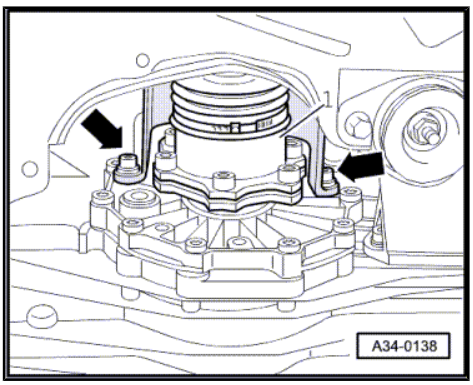

– Unscrew nuts -arrows- on exhaust manifold.

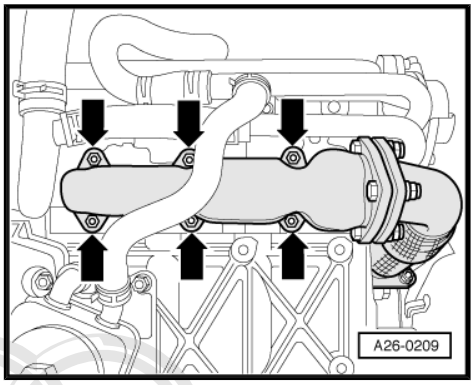

Protected by copyright. Copying for private or commercial purposes, in part or in whole, is not permitted unless authorised by AUDI AG. AUDI AG does not guarantee or accept any liability with respect to the correctness of information in this document. Copyright by AUDI AG.

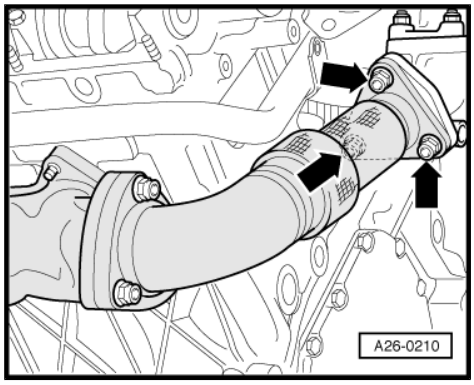

– Unbolt intermediate pipe from intermediate flange -arrows-.
– Detach exhaust manifold with intermediate pipe.
– Separate exhaust manifold and intermediate pipe if necessary.

Installing

Installation is carried out in the reverse order; note the following:

Note

Renew gaskets and self-locking nuts.

– Note installation position of gaskets for exhaust manifold:
• Aluminium side should face towards cylinder head
– Install front exhaust pipe ⇒ page 235 .
– Align the exhaust system so it is free of stress ⇒ page 242 .
– Install poly V-belt for air conditioner compressor ⇒ page 35 .

Tightening torques

Component		Nm
Exhaust manifold to cylinder head		22
Intermediate pipe to:	Exhaust manifold	22
	Intermediate flange	22
Front exhaust pipe with catalytic converter to:	Turbocharger	25
	Mounting plate	25
Heat shield to turbocharger		10
Air conditioner compressor to bracket		22
Shield for drive shaft to gearbox		25

Protected by copyright. Copying for private or commercial purposes, in part or in whole, is not permitted unless authorised by AUDI AG. AUDI AG does not guarantee or accept any liability with respect to the correctness of information in this document. Copyright by AUDI AG.

2.3 Removing and installing exhaust manifold (left-side) with intermediate pipe - engine code letters AKE

Removing

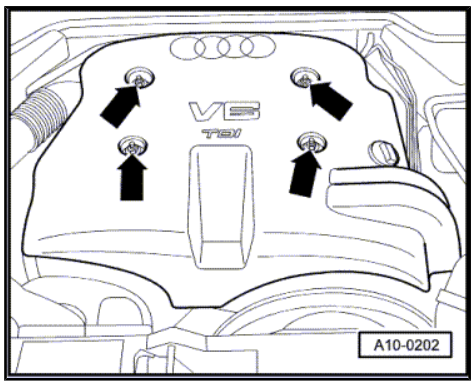

Note

The exhaust manifold (left-side) can only be removed together with the intermediate pipe (left-side).

– Detach caps on engine cover panel.
– Unbolt and remove engine cover panel -arrows-.
– Remove poly V-belt for air conditioner compressor ⇒ page 35 .

– Remove bolts -arrows- securing exhaust pipe for auxiliary/ supplementary heater to noise insulation.

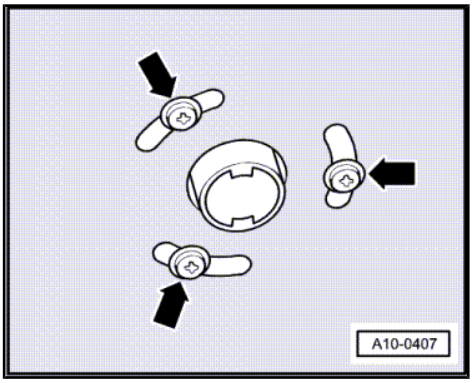

– Release quick-release fasteners -1- and -2- and take off front and rear noise insulation.

– On vehicles with automatic gearbox, unscrew bracket for ATF lines.

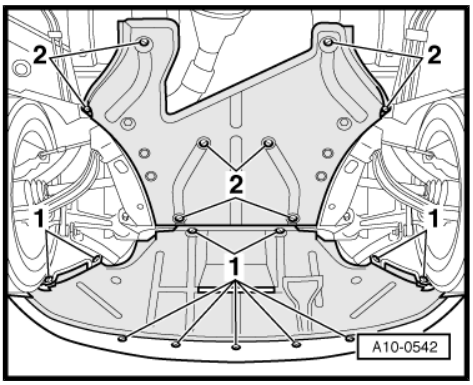

WARNING

Risk of injury caused by refrigerant.

- *The air conditioner refrigerant circuit must not be opened.*

– Unbolt air-conditioner compressor from bracket -arrows-.

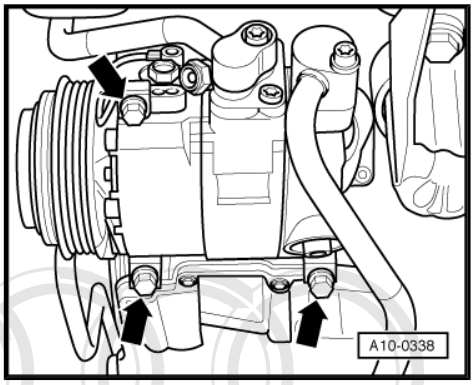

Caution

Danger of damage to refrigerant lines and hoses.

- *Do NOT stretch, kink or bend refrigerant lines and hoses.*

– Tie air conditioner compressor up to side at body longitudinal member (leave hoses connected).

– Remove noise insulation above drive shaft (left-side) -arrows-.

Protected by copyright. Copying for private or commercial purposes, in part or in whole, is not permitted unless authorised by AUDI AG. AUDI AG does not guarantee or assume any liability with respect to the correctness of information in this document. Copyright by AUDI AG.

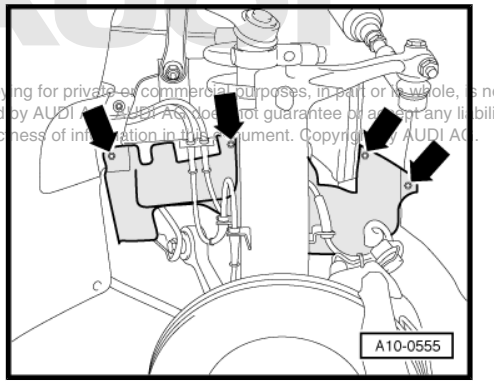

– Detach heat shield for drive shaft (left-side) -1- from gearbox -arrows-.

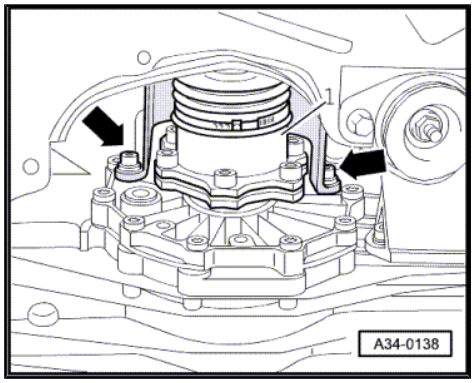

– Unbolt front exhaust pipe from starter catalytic converter -1-.

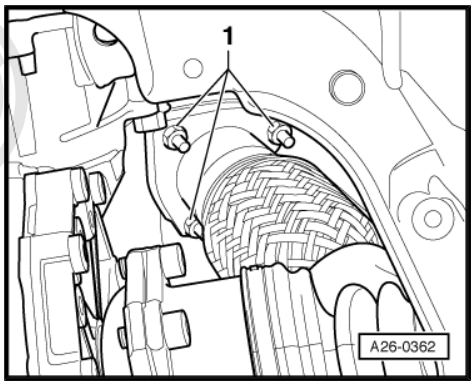

Protected by copyright. Copying for private or commercial purposes, in part or in whole, is not permitted unless authorised by AUDI AG. AUDI AG does not guarantee or accept any liability with respect to the correctness of information in this document. Copyright by AUDI AG

– Remove catalytic converters from gearbox mounting -2-.

Note

Illustration shows vehicle with front-wheel drive.

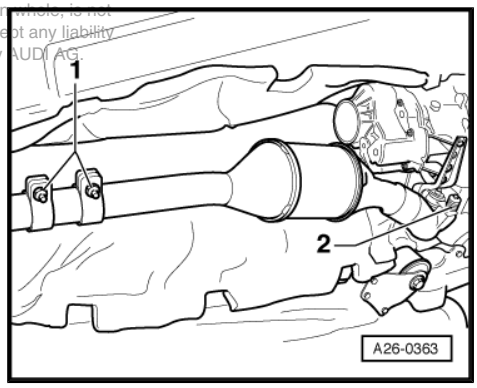

– Remove heat shield above turbocharger -arrows-.

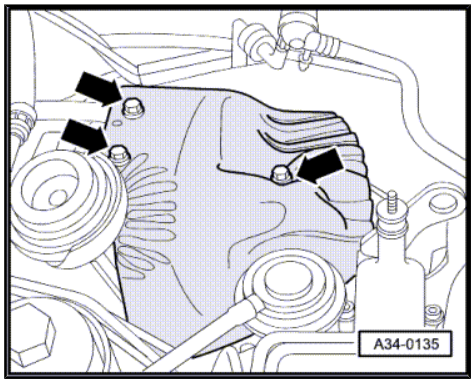

– Unscrew nuts -1- and lift out starter catalytic converter.

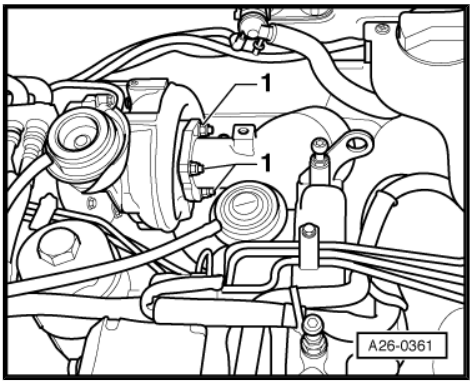

– Unscrew nuts -arrows- on exhaust manifold.

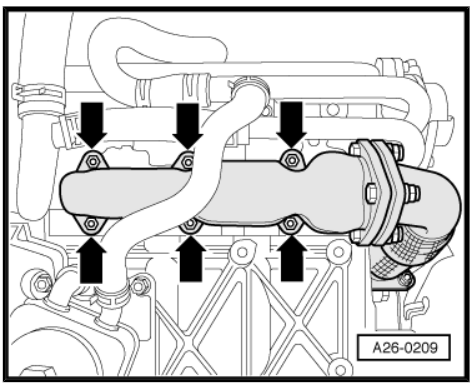

Protected by copyright. Copying for private or commercial purposes, in part or in whole, is not permitted unless authorised by AUDI AG. AUDI AG does not guarantee or accept any liability with respect to the correctness of information in this document. Copyright by AUDI AG.

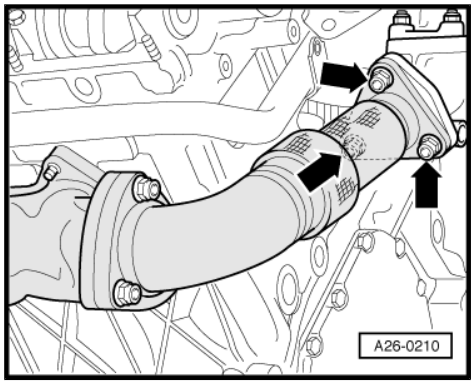

– Unbolt intermediate pipe from intermediate flange -arrows-.
– Detach exhaust manifold with intermediate pipe.
– Separate exhaust manifold and intermediate pipe if necessary.

Installing

Installation is carried out in the reverse order; note the following:

Note

Renew gaskets and self-locking nuts.

– Note installation position of gaskets for exhaust manifold:
• Aluminium side should face towards cylinder head
– Install front exhaust pipe ⇒ page 235 .
– Align the exhaust system so it is free of stress ⇒ page 242 .
– Install poly V-belt for air conditioner compressor ⇒ page 35 .

Tightening torques

Component		Nm
Exhaust manifold to cylinder head		22
Intermediate pipe to:	Exhaust manifold	22
	Intermediate flange	22
Front exhaust pipe with catalytic converter to:	Turbocharger	25
	Mounting plate	25
Heat shield to turbocharger		10
Air conditioner compressor to bracket		22
Shield for drive shaft to gearbox		25

Protected by copyright. Copying for private or commercial purposes, in part or in whole, is not permitted unless authorised by AUDI AG. AUDI AG does not guarantee or accept any liability with respect to the correctness of information in this document. Copyright by AUDI AG.

2.4 Removing and installing exhaust manifold (right-side) with intermediate pipe

Special tools and workshop equipment required

♦ Support bracket -10 - 222 A-

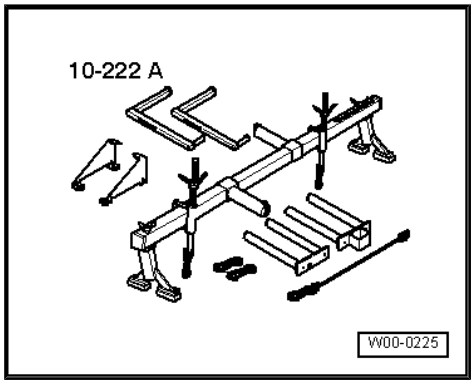

♦ Workshop hoist -VAS 6100-

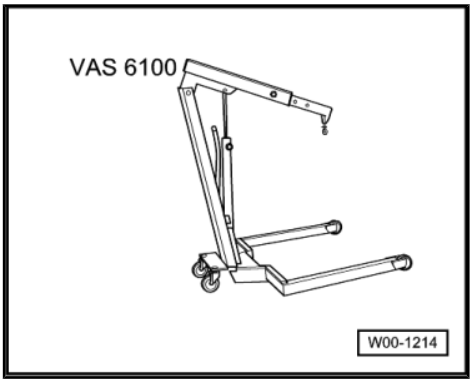

Removing

Note

The exhaust manifold (right-side) can only be removed together with the intermediate pipe (right-side).

Caution

To prevent damage to the electronic components when disconnecting the battery:

- ***Observe notes on procedure for disconnecting the battery.***

– Disconnect earth cable at battery ⇒ Rep. Gr. 27 .

– Remove poly V-belt for power steering pump, alternator and viscous fan ⇒ page 31 .

– Push out pin -1-, take out clip and remove electric fan.

– Move wiring for electric fan clear.

– Turn electric fan in direction of -arrow- and detach it.

– Move electric fan clear to one side.

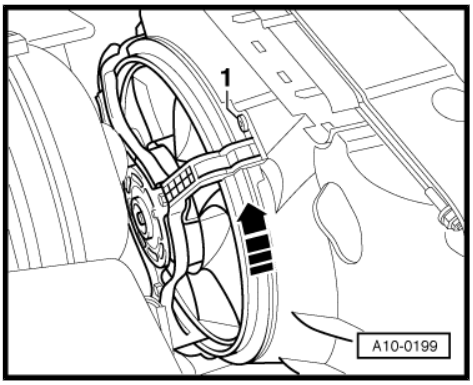

– Remove air hose from air cleaner -arrows-.

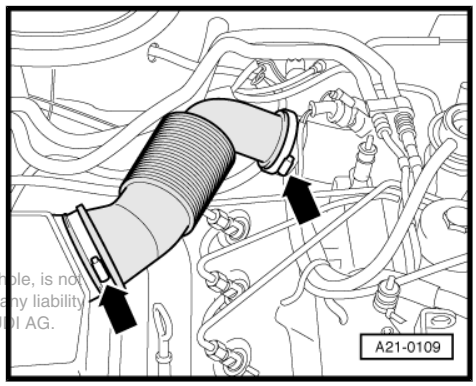

Protected by copyright. Copying for private or commercial purposes, in part or in whole, is not permitted unless authorised by AUDI AG. AUDI AG does not guarantee or accept any liability with respect to the correctness of information in this document. Copyright by AUDI AG.

– Remove hose leading to turbocharger -arrows-.

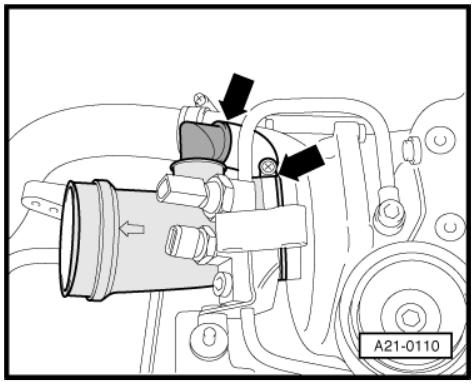

– Remove lifting eye from intake manifold (rear left) and bolt it onto intake manifold (rear right) together with oil line -arrow- (tighten to 22 Nm).

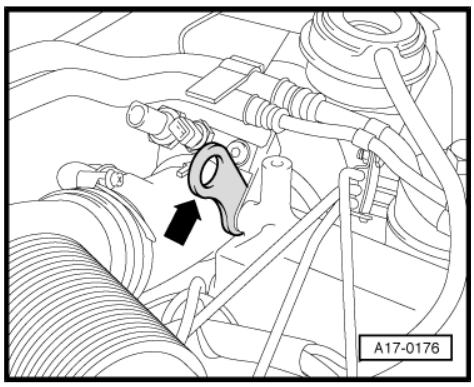

– Remove lifting eye from intake manifold (front left) and bolt it onto intake manifold (rear left) -arrow- (tighten to 22 Nm).

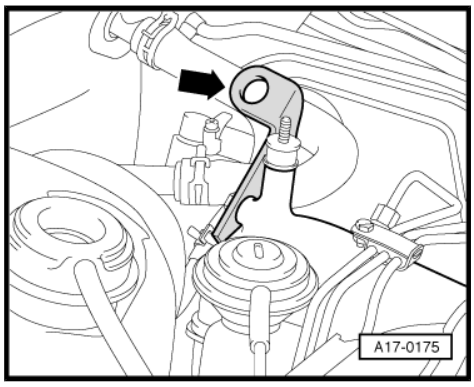

– Remove cover panels -1 … 4-.

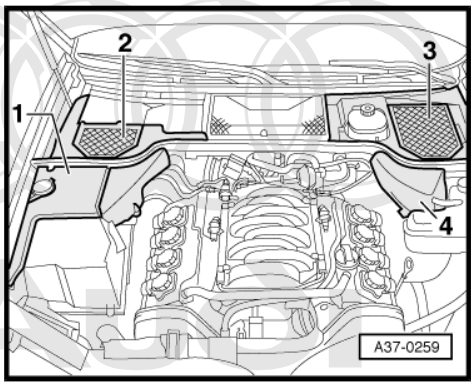

Protected by copyright. Copying for private or commercial purposes, in part or in whole, is not permitted unless authorised by AUDI AG. AUDI AG does not guarantee or accept any liability with respect to the correctness of information in this document. Copyright by AUDI AG.

– Position support bracket -10 - 222 A- with adapter -10 - 222 A /4- on bolts of suspension turret and make sure it is stable.
- Spindle (left-side) should be at rear.
- Spindle (right-side) should be at front.
– Attach spindles of support bracket to rear engine lifting eyes.
– Take up weight of engine with spindles of support bracket -10 - 222 A- , but do not lift.

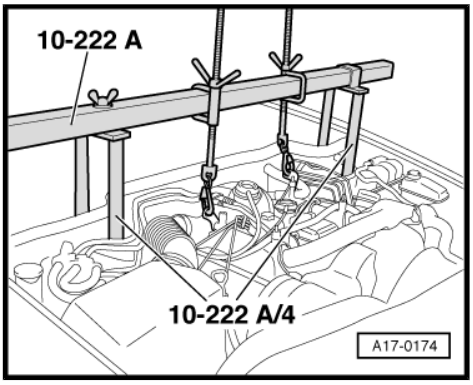

– Remove noise insulation above drive shaft (right-side) -arrows-.

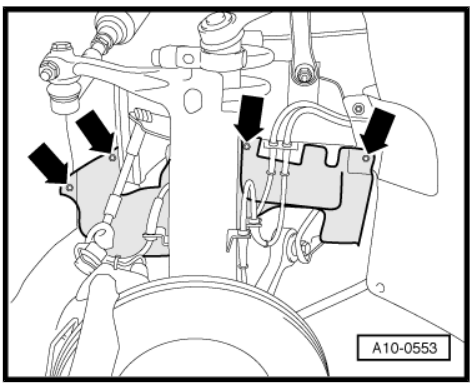

– Remove bolts -arrows- securing exhaust pipe for auxiliary/ supplementary heater to noise insulation.

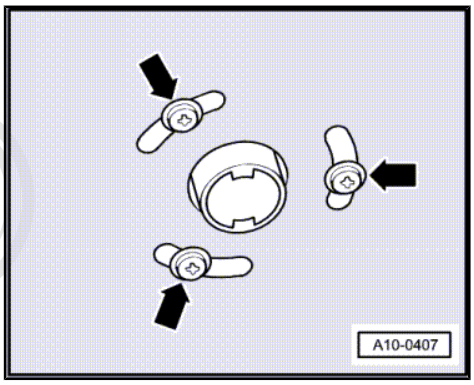

– Release quick-release fasteners -1- and -2- and take off front and rear noise insulation.

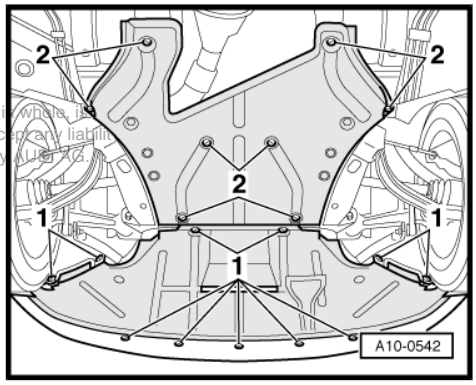

Protected by copyright. Copying for private or commercial purposes, in part or in whole, is not permitted unless authorised by AUDI AG. AUDI AG does not guarantee or accept any liability with respect to the correctness of information in this document. Copyright by AUDI AG.

– Unscrew damper weight (right-side) -arrow- from subframe.

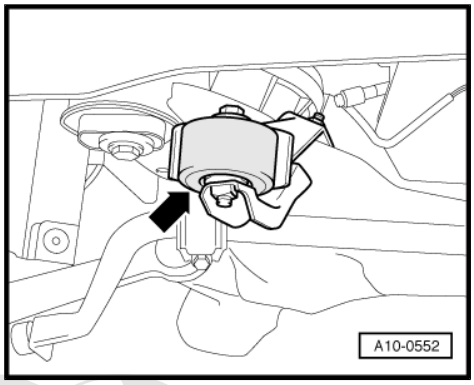

– Unscrew bolts (bottom) -arrows- at engine mountings.
– Remove bolts for alternator.
– Detach wires from alternator (removed).

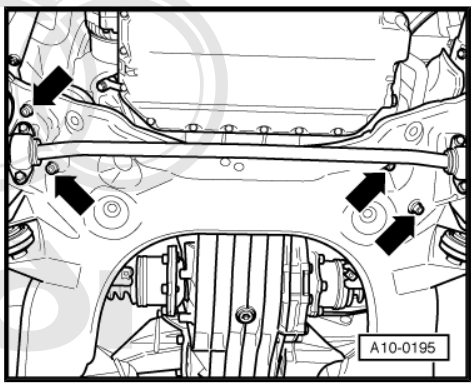

Protected by copyright. Copying for private or commercial purposes, in part or in whole, is not permitted unless authorised by AUDI AG. AUDI AG does not guarantee or accept any liability with respect to the correctness of information in this document. Copyright by AUDI AG.

– Detach wires -1- and -2- from starter.
– Unscrew bolts -arrows- securing starter from gearbox side.
– Detach starter.

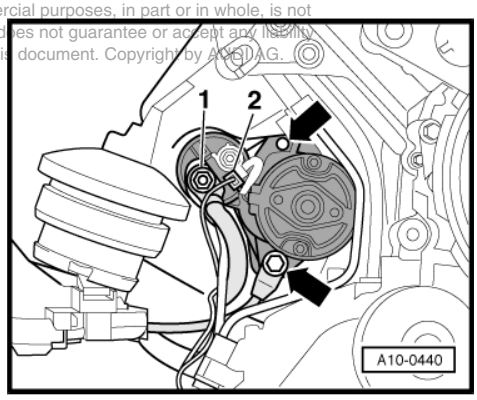

– If fitted, unclip actuator rod for vehicle level sender at bottom transverse link -arrow-.

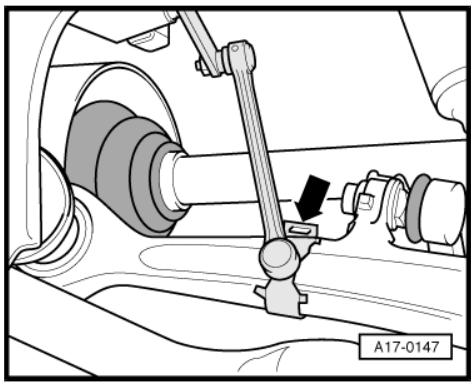

– Loosen rear bolt -2- on gearbox mountings (left and right) a few turns; unscrew and remove front bolt -1- on gearbox mounting (left-side).
– Support subframe with workshop hoist -VAS 6100- .

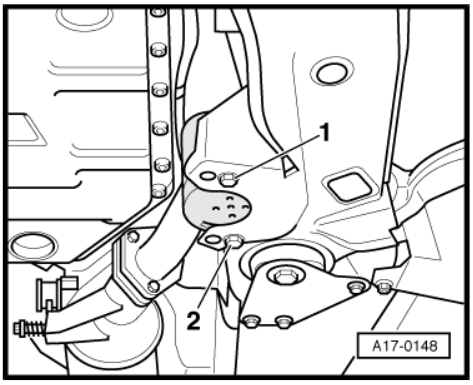

– Unscrew front bolts of subframe (left and right) -arrow-.

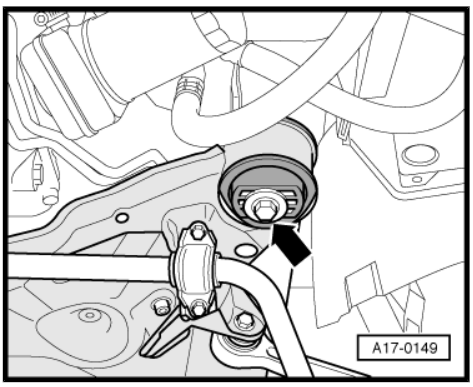

Note

To avoid having to check and adjust wheel alignment, only loosen the front subframe mountings and lower the subframe at the front.

– Lower subframe slowly using workshop hoist.
– Unplug electrical connector at engine mounting (right-side).

– Unbolt engine support (right-side) from cylinder block -arrows- and detach it together with engine mounting.

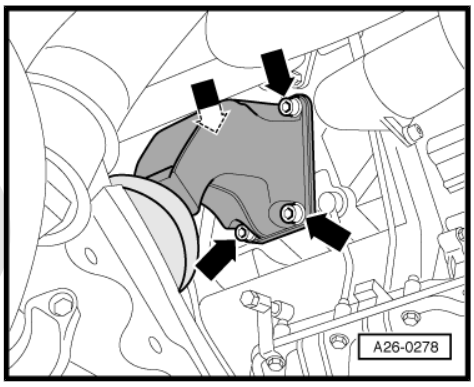

Protected by copyright. Copying for private or commercial purposes, in part or in whole, is not permitted unless authorised by AUDI AG. AUDI AG does not guarantee or accept any liability with respect to the correctness of information in this document. Copyright by AUDI AG.

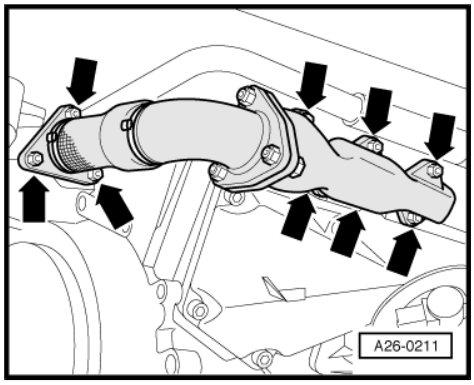

– Unscrew nuts -arrows- for exhaust manifold and intermediate pipe.
– Take out exhaust manifold with intermediate pipe.
– Separate exhaust manifold and intermediate pipe if necessary.

Installing

Installation is carried out in the reverse order; note the following:

Note

Protected by copyright. Copying for private or commercial purposes, in part or in whole, is not permitted unless authorised by AUDI AG. AUDI AG does not guarantee or accept any liability with respect to the correctness of information in this document. Copyright by AUDI AG.

- ♦ *Renew gaskets and self-locking nuts.*
- ♦ *Hose connections and hoses for charge air system must be free of oil and grease before assembly.*
- ♦ *Secure all hose connections with the correct type of hose clips (same as original equipment) ⇒ Electronic parts catalogue .*

– Note installation position of gaskets for exhaust manifold:
• Aluminium side should face towards cylinder head
– Install subframe; observe tightening sequence ⇒ Rep. Gr. 40 .
– Install front exhaust pipe ⇒ page 235 .
– Install alternator and starter ⇒ Rep. Gr. 27 .
– Install poly V-belt ⇒ page 31 .
– Observe notes on procedures required after connecting battery ⇒ Rep. Gr. 27 .

Tightening torques

Component		Nm
Exhaust manifold to cylinder head		22
Intermediate pipe to:	Exhaust manifold	22
	Intermediate flange	22
Gearbox mounting to subframe		40
Engine mounting to subframe		40
Damper weight to subframe		23
Oil pipe to intake manifold		22

3 Exhaust gas recirculation system

- The exhaust gas recirculation system is actuated by the diesel direct injection system control unit -J248- via the exhaust gas recirculation valve -N18- and the mechanical exhaust gas recirculation valve.
- The tapered plunger in the mechanical exhaust gas recirculation valve varies the opening cross section according to valve travel.
- Pulsed actuation makes it possible to obtain any required valve position.

3.1 Hose connection diagram for exhaust gas recirculation

1 - To breather connection at air cleaner housing

2 - Vacuum hose

- ❑ To vacuum reservoir/ exhauster pump

3 - Vacuum hose

- ❑ From charge pressure control solenoid valve -N75- to vacuum unit for charge pressure control

4 - Brake servo

5 - Vacuum reservoir

- ❑ Fitting location: in front left wheel housing beneath liner

6 - Non-return valve

- ❑ Installation position (light side/dark side): as shown in illustration

7 - Exhauster pump

8 - To variable intake manifold flap change-over valve -N239-

9 - Vacuum hose

- ❑ From exhaust gas recirculation valve -N18- to mechanical exhaust gas recirculation valve

10 - Charge pressure control solenoid valve -N75-

11 - Exhaust gas recirculation valve -N18-

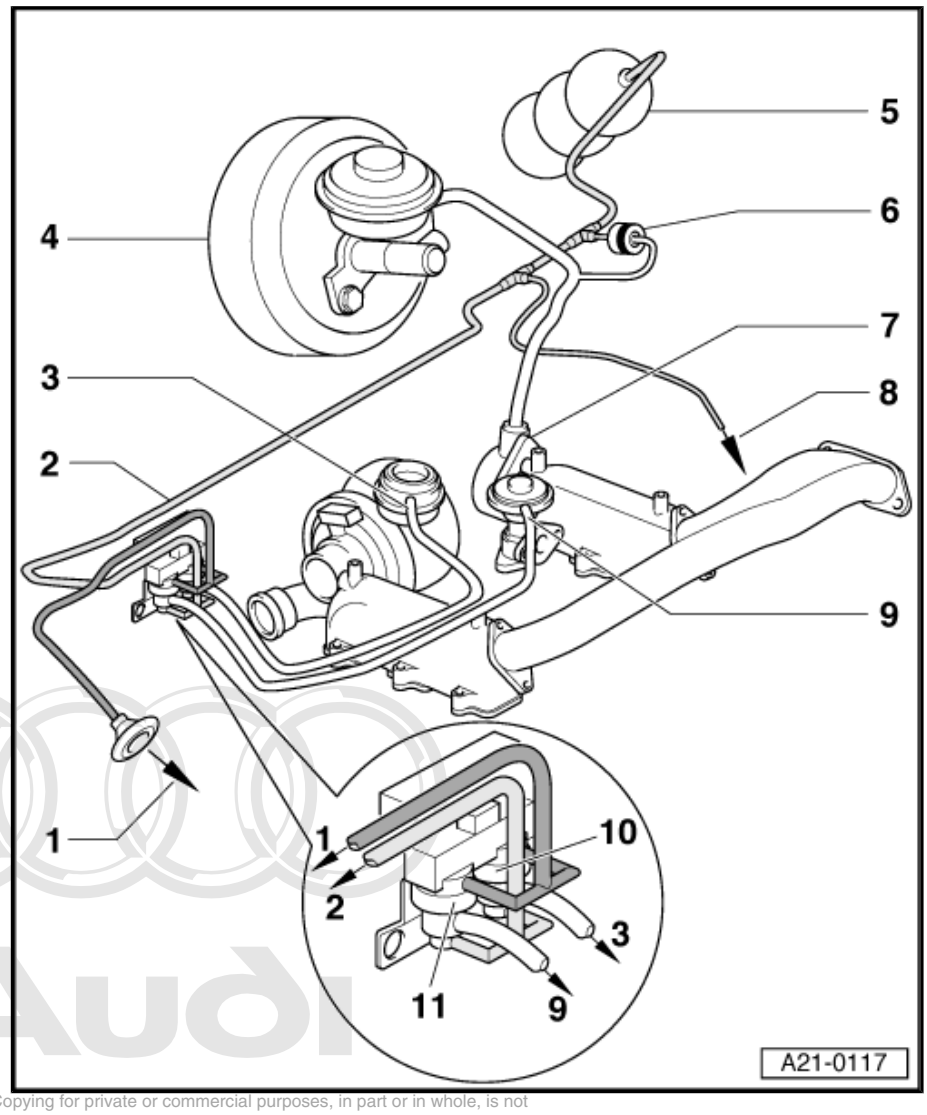

Protected by copyright. Copying for private or commercial purposes, in part or in whole, is not permitted unless authorised by AUDI AG. AUDI AG does not guarantee or accept any liability with respect to the correctness of information in this document. Copyright by AUDI AG.

3.2 Checking exhaust gas recirculation

Checking the exhaust gas recirculation function is performed in the “Basic setting” function. In this test, the exhaust gas recirculation valve is pulsed every 10 seconds, so that the extreme values for the exhaust gas recirculation (air mass meter) can be read off in display group 003.

Special tools and workshop equipment required

♦ Vehicle diagnostic, testing and information system -VAS 5051B-

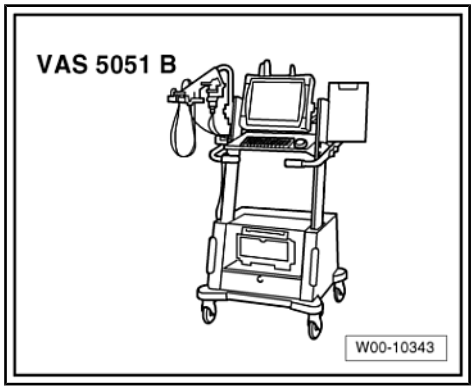

Copyright. Copying for private or commercial purposes, in part or in whole, is not permitted unless authorised by AUDI AG. AUDI AG does not guarantee or accept any liability with respect to the correctness of information in this document. Copyright by AUDI AG.

Test sequence

Note

Coolant temperature at least 80 °C.

- Vehicle diagnostic, testing and information system -VAS 5051B- connected.
- Ignition switched on.
- Vehicle self-diagnosis and vehicle system “01 - Engine electronics” selected.

Display on -VAS 5051B- :

– From menu -1-, select diagnosis function “Basic setting” and press → key to continue.

Display on -VAS 5051B- :

– Press key 3 on keypad -1- to select “Display group 003” and confirm entry by pressing key Q.

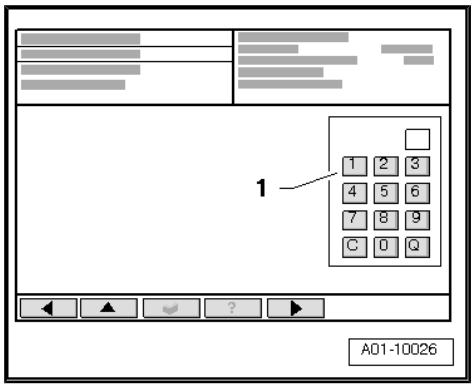

Display on -VAS 5051B- :

– Check display in display zone -2-.

• Specification: display should alternate between “EGR n.active” and “EGR active” every 10 seconds.

– Check display in zone -3-.

• Specification: display value for intake air mass “... mg/H” (= mg per stroke) should change significantly every 10 seconds.

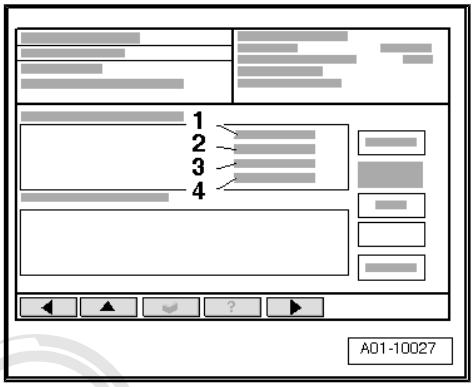

If the specifications are not obtained:

– Check exhaust gas recirculation valve -N18- ⇒ page 263 .

3.3 Checking exhaust gas recirculation valve -N18-

Special tools and workshop equipment required

- Hand-held multimeter -V.A.G 1526D-
- Auxiliary measuring set -V.A.G 1594C-
- Adapter -V.A.G 1598/30- (engine code AFB for vehicles with manual gearbox or automatic gearbox; engine code AKN for vehicles with manual gearbox)
- Adapter cable, 121-pin -V.A.G 1598/31- (engine code AKN for vehicles with automatic gearbox)
- Vehicle diagnostic, testing and information system -VAS 5051B-
- Hand vacuum pump -VAS 6213-

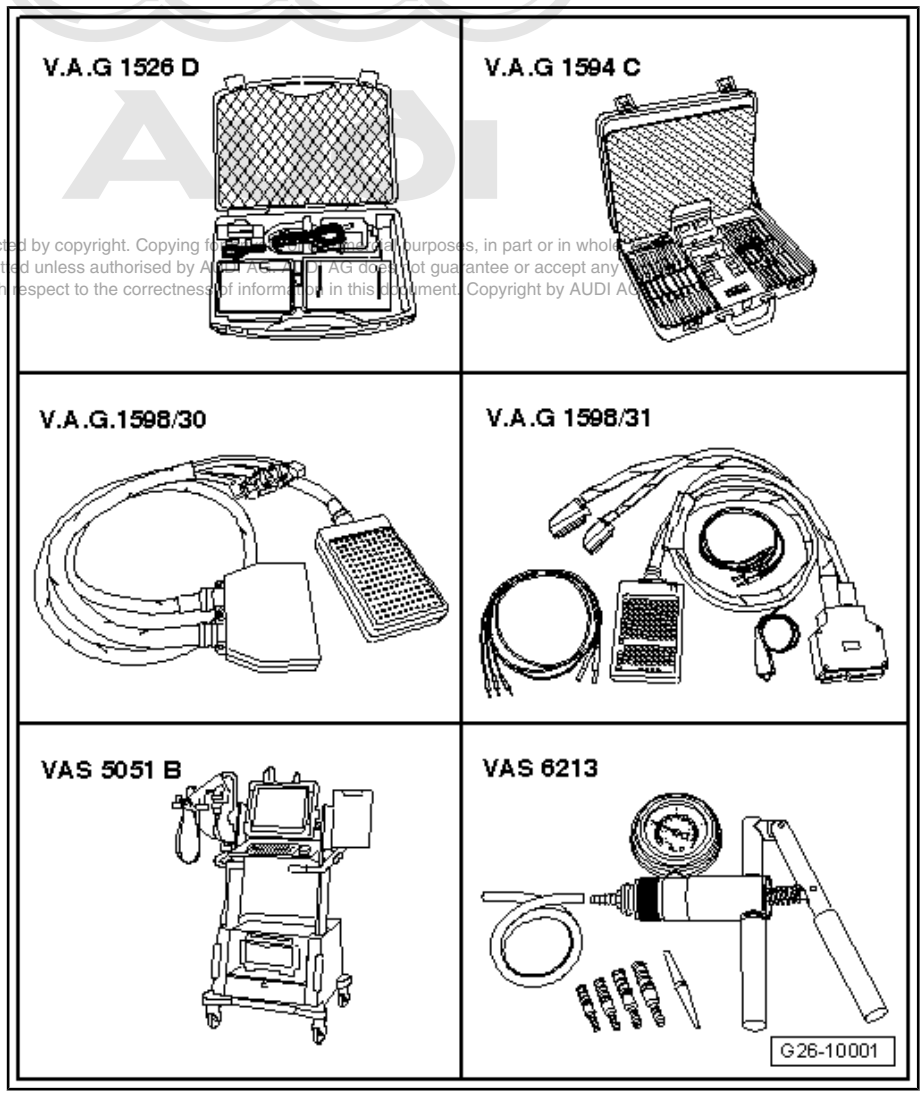

Protected by copyright. Copying for private or commercial purposes, in part or in whole, is not permitted unless authorised by AUDI AG. AUDI AG does not guarantee or accept any liability with respect to the correctness of information in this document. Copyright by AUDI AG.

Test sequence

Note

The exhaust gas recirculation valve -N18- and the wiring connections are monitored by the engine control unit.

- Vehicle diagnostic, testing and information system -VAS 5051B- connected.
- Engine running.
- Vehicle self-diagnosis and vehicle system “01 - Engine electronics” selected.

Display on -VAS 5051B- :

– From menu -1-, select diagnostic function “Interrogate fault memory” and press ↵ key to continue.

If a fault relating to exhaust gas recirculation valve -N18- is displayed:

– Press ← key to terminate function “Interrogate fault memory”.

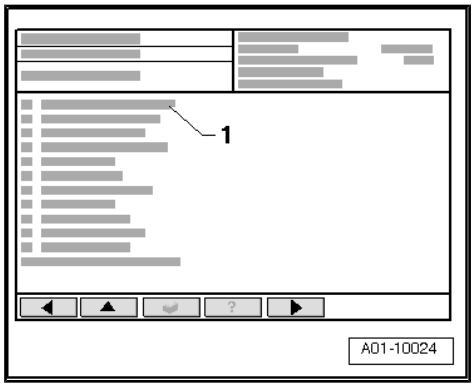

Checking mechanical operation

– Switch off ignition.

– Unplug electrical connectors -1 ... 4-.

– Disengage connector -3- from bracket.

– Slide charge pressure control solenoid valve -N75- and exhaust gas recirculation valve -N18- off bracket in direction of -arrow-.

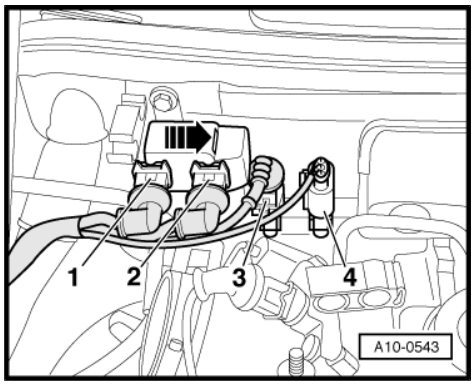

– Detach hose at vacuum connection -3- (leave hose at connection -2- attached to mechanical exhaust gas recirculation valve).

– Connect hand vacuum pump -VAS 6213- to vacuum connection -3-.

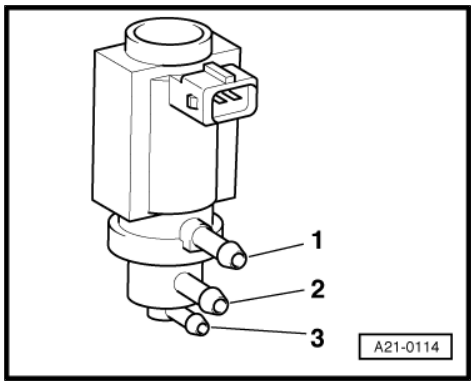

– Use a test lead from auxiliary measuring set -V.A.G 1594C- to connect contact -2- of solenoid valve to battery positive “+”.

– Connect contact -1- to earth.

- The valve should click.

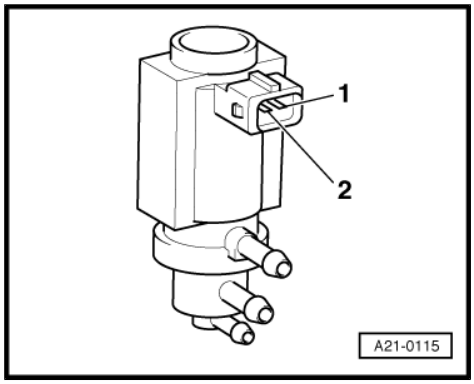

Protected by copyright. Copying for private or commercial purposes, in part or in whole, is not permitted unless authorised by AUDI AG. AUDI AG does not guarantee or accept any liability with respect to the correctness of information in this document. Copyright by AUDI AG.

– Detach caps on engine cover panel.
– Unbolt and remove engine cover panel -arrows-.

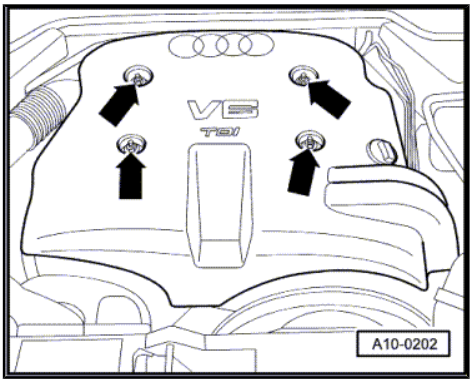

– Disconnect vacuum hose from mechanical exhaust gas recirculation valve -arrow-.
– Operate hand vacuum pump -VAS 6213- .
♦ Vacuum is applied to disconnected vacuum hose (feel with finger).

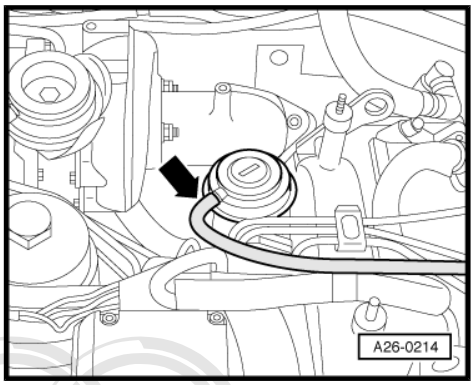

– Detach earth connection from contact -1- of solenoid valve.
– Operate hand vacuum pump -VAS 6213- .
♦ Vacuum is not applied to disconnected vacuum hose (feel with finger).

If the specifications are not obtained:

– Renew exhaust gas recirculation valve -N18- .

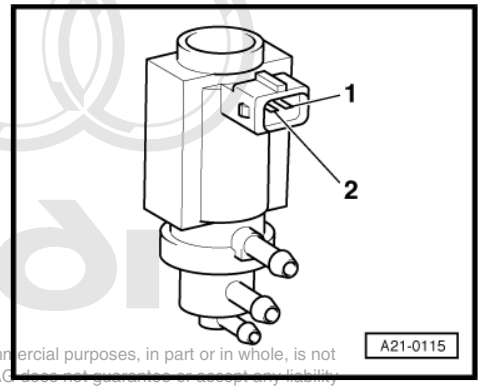

Protected by copyright. Copying for private or commercial purposes, in part or in whole, is not permitted unless authorised by AUDI AG. AUDI AG does not guarantee or accept any liability with respect to the correctness of information in this document. Copyright by AUDI AG.

Checking voltage supply:

– Connect hand-held multimeter -V.A.G 1526D- for voltage measurement as follows:

Connector Contact	Measure against
2	Earth

– Switch on ignition.
• Specification: approx. battery voltage.

If specification is not obtained:

– Check wiring connection for open circuit and short to positive or earth ⇒ Current flow diagrams, Electrical fault finding and Fitting locations.

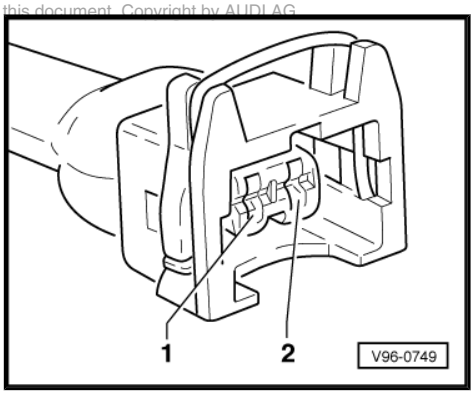

Checking internal resistance:

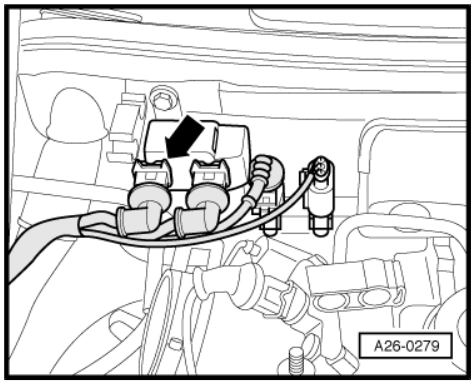

– Unplug electrical connector -arrow- at exhaust gas recirculation valve -N18- .

– Connect multimeter (resistance measuring range) to valve.

• Specification: 14 ... 20 Ω.

If specification is not obtained:

– Renew exhaust gas recirculation valve -N18- .

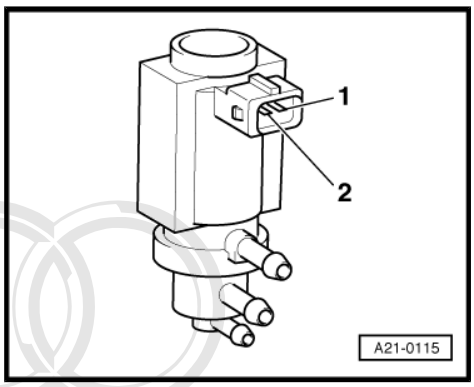

Checking signal wire:

– Slacken off cross-head bolts -1- at electronics box in plenum chamber.

– Unclip plenum chamber cover -2- at front of bulkhead -arrows-.

– Detach plenum chamber cover.

Protected by copyright. Copying for private or commercial purposes, in part or in whole, is not permitted unless authorised by AUDI AG. AUDI AG does not guarantee or accept any liability with respect to the correctness of information in this document.

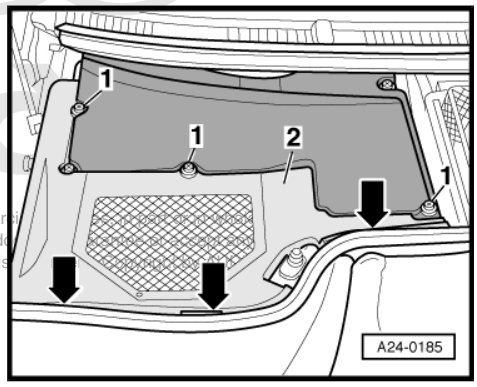

– Prise out cover -1- in cowl panel trim and loosen rear cross-head bolt -arrow- at rear right.

– Slacken off the remaining cross-head bolts -arrows-.

– Detach cover for electronics box (plenum chamber).

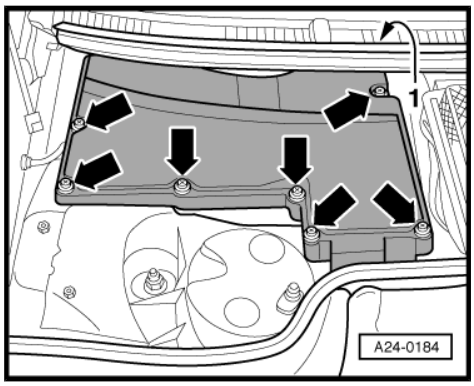

Engine code AFB for vehicles with manual gearbox or automatic gearbox, engine code AKN for vehicles with manual gearbox:

Engine code AKN for vehicles with automatic gearbox:

– Connect adapter cable, 121-pin -V.A.G 1598/31- to connector of wiring harness (do not connect engine control unit).

– Connect earth clip of adapter cable to earth (not shown in illustration).

All vehicles (continued):

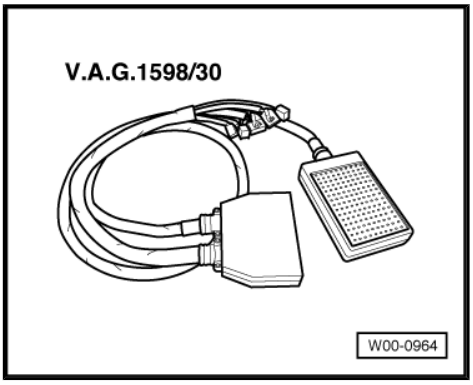

> ⚠ **Caution**
>
> *Electronic components are susceptible to damage.*
>
> ♦ *Select the appropriate measuring range before connecting the test leads and observe test requirements.*

– Check for open circuit and short to positive or earth in the following wiring:

Connector Contact	-V.A.G 1598/30- Socket	-V.A.G 1598/31- Socket
1	2/13	61

– Repair wiring connection if necessary.

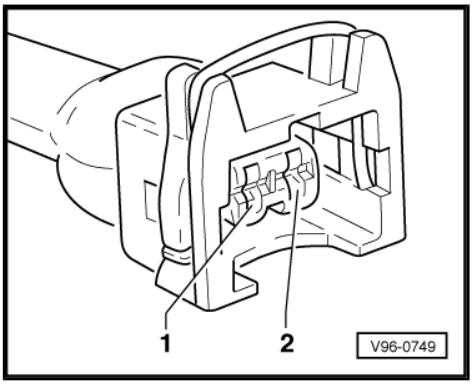

3.4 Checking mechanical exhaust gas recirculation valve

Special tools and workshop equipment required

♦ Hand vacuum pump -VAS 6213-

Protected by copyright. Copying for private or commercial purposes, in part or in whole, is not permitted unless authorised by AUDI AG. AUDI AG does not guarantee or accept any liability with respect to the correctness of information in this document. Copyright by AUDI AG.

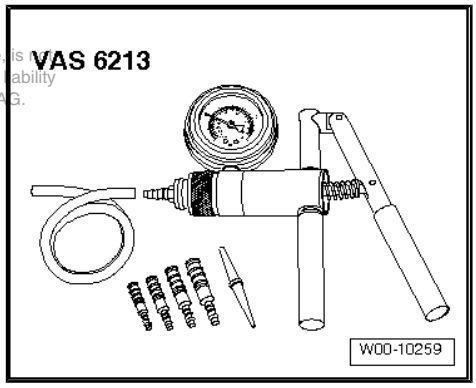

Test sequence

– Detach caps on engine cover panel.
– Unbolt and remove engine cover panel -arrows-.

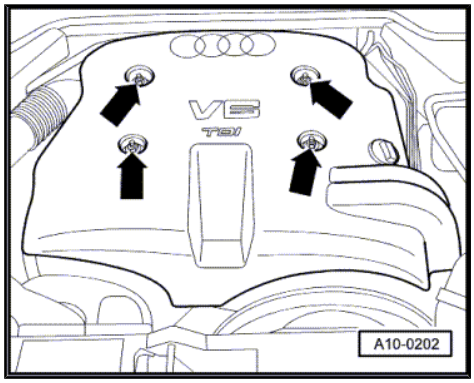

Protected by copyright. Copying for private or commercial purposes, in part or in whole, is not permitted unless authorised by AUDI AG. AUDI AG does not guarantee or accept any liability with respect to the correctness of information in this document. Copyright by AUDI AG.

– Disconnect vacuum hose from mechanical exhaust gas recirculation valve -arrow-.

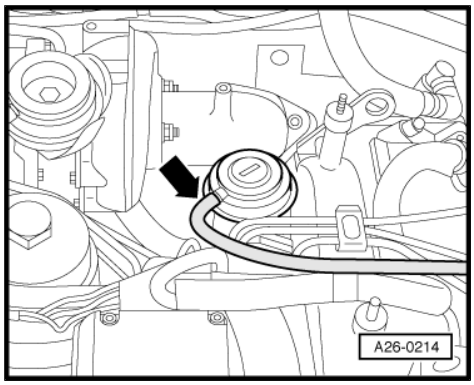

– Connect hand vacuum pump -VAS 6213- to valve.
– Operate hand vacuum pump -VAS 6213- .
– Pull hose of hand vacuum pump off exhaust gas recirculation valve.
• The closing of the valve should be clearly audible. The diaphragm rod should move towards intake manifold

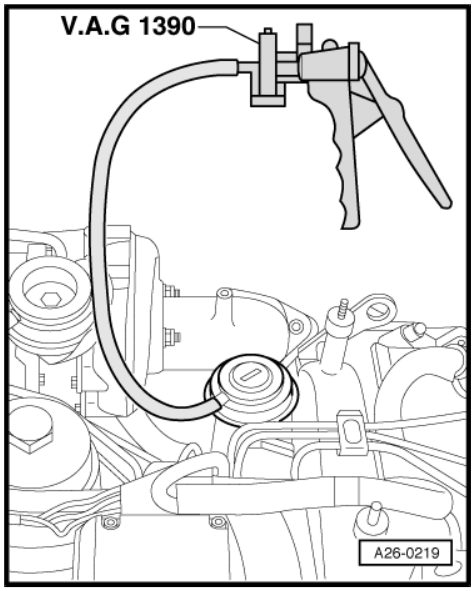

3.5 Removing and installing mechanical exhaust gas recirculation valve

Special tools and workshop equipment required

- Ring spanner -3035-

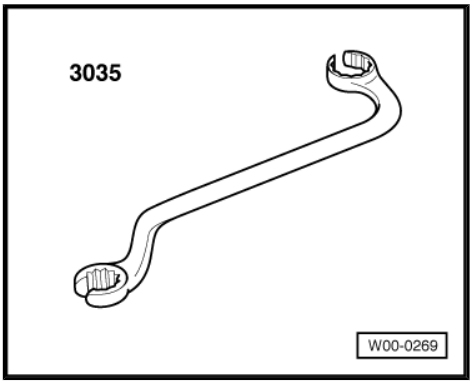

- Torque wrench -V.A.G 1331- with ratchet -V.A.G 1331/1-

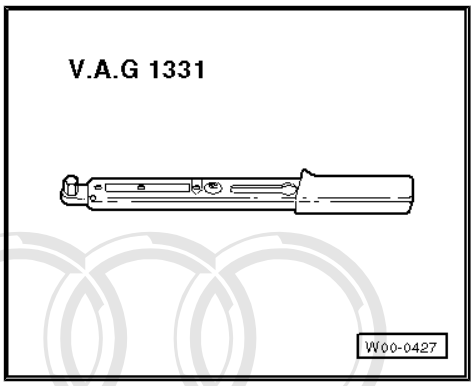

- Tool insert AF 17 -V.A.G 1331/6-

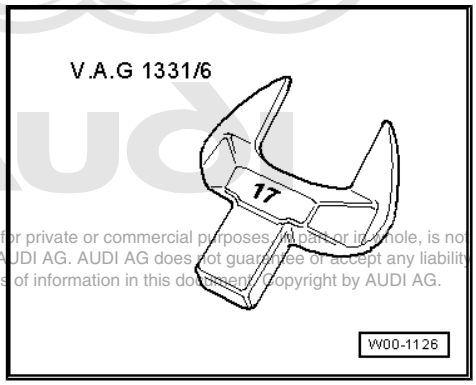

Protected by copyright. Copying for private or commercial purposes, in part or in whole, is not permitted unless authorised by AUDI AG. AUDI AG does not guarantee or accept any liability with respect to the correctness of information in this document. Copyright by AUDI AG.

- Socket -T40055-

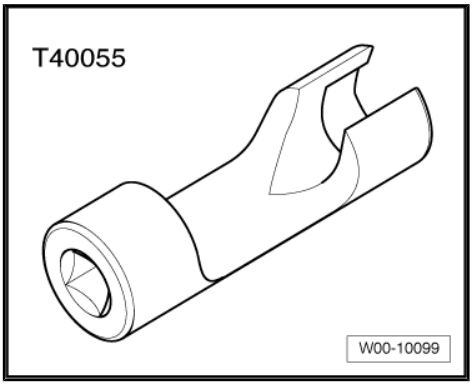

Removing

– Open quick-release fasteners -2- and remove rear noise insulation.

– Remove front exhaust pipe from mounting plate.

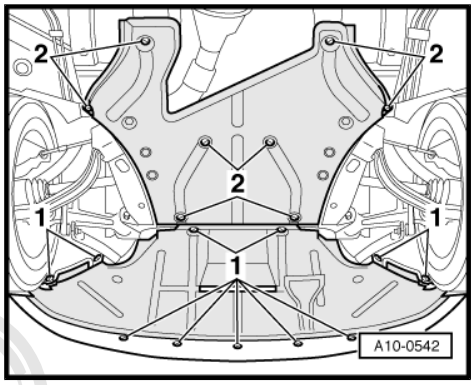

– Detach caps on engine cover panel.

– Unbolt and remove engine cover panel -arrows-.

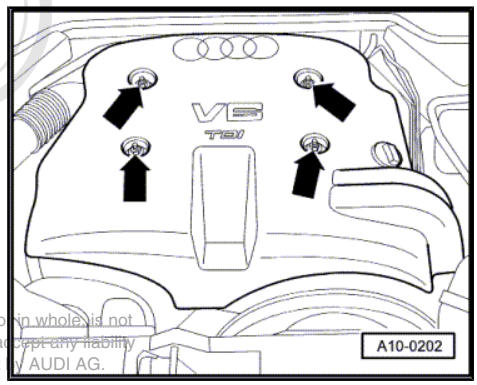

Protected by copyright. Copying for private or commercial purposes, in part or in whole is not permitted unless authorised by AUDI AG. AUDI AG does not guarantee or accept any liability with respect to the correctness of information in this document. Copyright by AUDI AG.

– Remove heat shield above turbocharger -arrows-.

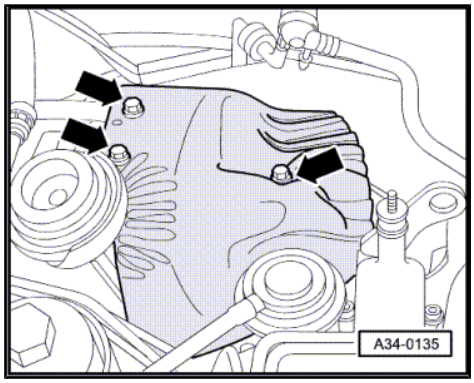

– Unbolt front exhaust pipe from connection for turbocharger -arrows-.

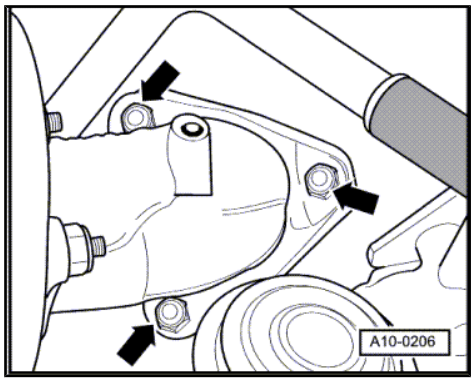

– Unbolt exhaust elbow from turbocharger -arrows-.
– Remove intake manifold (front section) ⇒ page 97 .
– Mark injector pipes according to cylinder (e.g. with felt-tip pen).
– Disconnect injector pipes one by one with ring spanner -3035- .

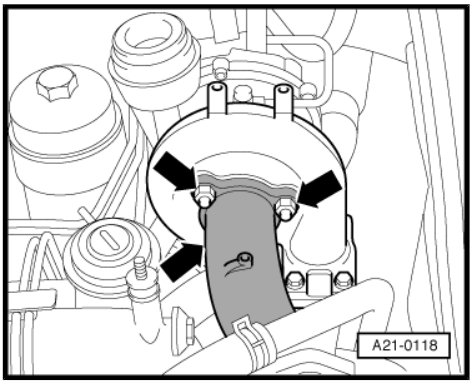

– Disconnect vacuum hose from mechanical exhaust gas recirculation valve -arrow-.

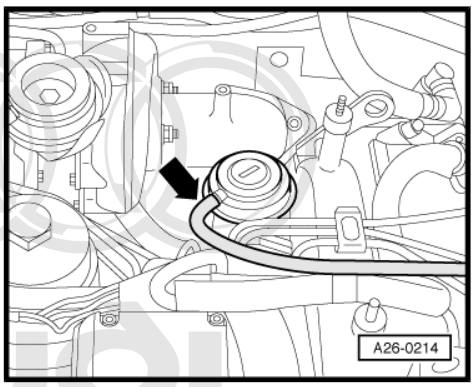

– Remove nuts -1- and bolt -2-.
– Detach mechanical EGR valve.

Protected by copyright. Copying for private or commercial purposes, in part or in whole, is not permitted unless authorised by AUDI AG. AUDI AG does not guarantee or accept any liability with respect to the correctness of information in this document. Copyright by AUDI AG.

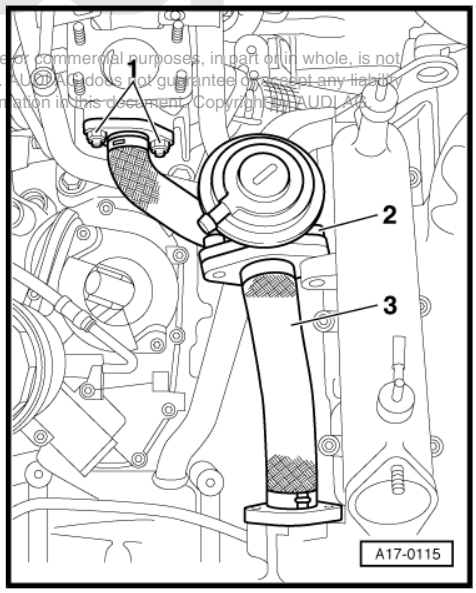

Installing

Installation is carried out in the reverse order; note the following:

Note

Renew gaskets and self-locking nuts.

– Install injector pipes one after the other (from bottom to top).
• Ensure stress-free installation of injector pipes.

– Tighten with torque wrench -V.A.G 1331- , and tool insert AF 17 -V.A.G 1331/6- .

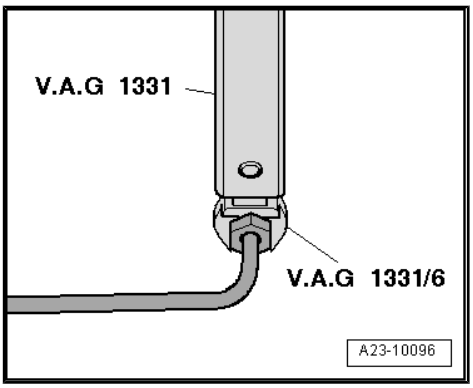

– Tighten with torque wrench -V.A.G 1331- , ratchet -V.A.G 1331/1- and socket -T40055- .
– Install intake manifold (front section) ⇒ page 97 .
– Check fuel system for leaks ⇒ page 4 .

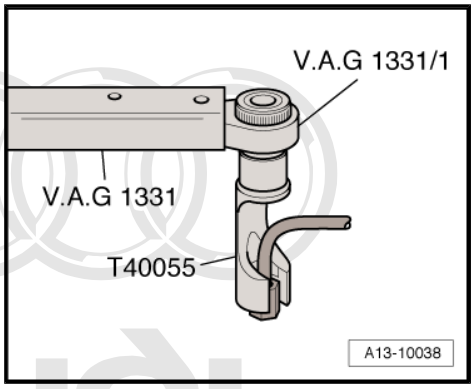

Tightening torques

Component		Nm
Mechanical EGR valve to	Intake manifold	22
	Pipe for exhaust gas re-circulation	22
EGR pipe to intermediate flange		22
Connection to turbocharger		22
Front exhaust pipe with catalytic converter to:	Turbocharger	25
	Mounting plate	25
Injector pipes to	Injectors	30
	Injection pump	30
Heat shield to turbocharger		10

Protected by copyright. Copying for private or commercial purposes, in part or in whole, is not permitted unless authorised by AUDI AG. AUDI AG does not guarantee or accept any liability with respect to the correctness of information in this document. Copyright by AUDI AG.