NT-855-F3
FIRE PUMP ENGINE

DESIGN FEATURES

Bearings: Replaceable, precision type, steel backed inserts. Seven main bearings, 4.5 in. (114 mm) diameter. Connecting rod bearings 3.125 in. (79 mm) diameter.

Camshaft: Single large diameter camshaft precisely controls valve and injector timing. Lobes are induction hardened for long life. Seven replaceable precision type bearings 2.5 in (64 mm) diameter.

Camshaft Followers: Induction hardened, roller type for long cam follower life.

Connecting Rods: Drop forged, I-beam section 12 in. (305 mm) center to center length. Rifle drilled for pressure lubrication of piston pin. Rod is tapered on piston pin end to reduce unit pressures.

Cooling System: Belt driven centrifugal water pump. Large volume water passages provide even flow of coolant around cylinder liners, valves, and injectors. Modulating by-pass thermostat regulates coolant temperature. Spin-on corrosion resistor checks rust and corrosion, controls acidity, and removes impurities.

Crankshaft: Fully counterweighted high tensile steel forging with induction hardened fi ets and journals.

Cylinder Block: Alloy cast iron with removable wet liners.

Cylinder heads: Alloy cast iron. EAch head serves two cylinders. Drilled fuel supply and return lines. Valve seats are replaceable corrosion resistant inserts. Valve guides and cross head guides are replaceable inserts.

Cylinder Liners: Replaceable wet liners dissipate heat faster than dry liners and are easily replaced without reboring the block.

Fuel System: Cummins exclusive low pressure PT™ system with wear compensating pump and integral dual flyweight governor. Camshaft actuated fuel injectors give accurate metering and timing. Fuel lines are internal drilled passages in cylinder heads. Spin-on fuel filter.

Gear Train: Timing gears and accessory drive gears are induction hardened helical gears driven from crankshaft and located at front of block.

Lubrication: Large capacity gear pump provides pressure lubrication to all bearings. All pressure lines are internal drilled passages in block and heads.

Piston: Aluminum alloy, cam ground and barrel shaped to compensate for thermal expansion assures precise fit at operating temperatures. CeCorr™ grooved skirt finish provides superior lubrication. Oil cooled for rapid heat dissipation. Three compression and one oil ring.

Turbocharger: Cummins exhaust gas driven turbocharger. Turbocharging provides more power, improved fuel economy, altitude compensation, and lower smoke and noise levels.

Valves: Dual 1.875 in. (48 mm) diameter poppet type intake and exhaust valves. Wear resistant face on exhaust valves.

STANDARD EQUIPMENT

Air Cleaner: 15 inch (381 mm) diameter dry air cleaner.

Belt and Damper Shield Guard: Protection from alternator, accessory drive, and water pump belts and vibration damper.

Coolant Pump: Belt driven, centrifugal type.

Corrosion Resistor: Mounted, checks rust and corrosion, controls acidity, and removes impurities from coolant.

Electrical Equipment: 24 volt negative ground system, including: a 24 volt starting motor; a 24 volt, 35 or 45 amp alternator; manually operable contactors; and a junction box with enclosed terminal strip.

Engine Support: Pedestal type, front and rear.

Exhaust Manifold: Dry and insulated.

Exhaust Outlet: 5 in. (127 mm) diameter, 90° elbow.

Filters: Spin-on, replaceable lubricating oil filter. Dual spin-on, replaceable fuel filters.

Flywheel: Machined for stub shaft mounting.

Flywheel Housing: SAE No. 1 with industrial supports.

Governor: Mechanical flyweight, mechanical variable speed type.

Heat Exchanger: Copper nickel tube bundle, mounted.

Instrument Panel: Mounted. Electrical instruments only. Includes charge meter, tachometer, hour meter, water temperature gauge, and lubricating oil pressure gauge.

Lubricating Oil Cooler: Tubular type, jacket water cooled.

Oil Pan: Cast aluminum, rear sump type, 7 U.S. gallon (26.5 litre) capacity. Provision for optional oil heater.

Oil Pressure Switch: Provides signal to activate alarm (not included) for low oil pressure.

Overspeed Switch: Mounted, overspeed shutdown with manual reset, stop crank contacts.

Stubshaft: Mounted on flywheel.

Throttle Control: Hydraulic, with no manual override.

Vibration Damper: Viscous type.

Water Jacket Heater: Mounted beside oil pan, 115 volt, 2500 watt.

Water Temperature Switch: Provides signal to activate alarm (not included) for high water temperature.

OPTIONAL EQUIPMENT

Oil Heater: Mounted on side of oil pan.

Cummins has always been a pioneer in product improvement. Thus specifications may change without notice. Illustrations may include optional equipment.

Cummins Engine Company, Inc.
Box 3005
Columbus, IN 47202-3005
U.S.A.

© 1991 Bulletin 3380287 Printed in U.S.A. Rev12/91

CUMMINS ENGINE COMPANY, INC.
Engine Data Sheet

Engine Model: FIRE PUMP NT855-F3 BIG CAM
Gross Power BHP (kW): 300 (224) @ 2100
Configuration Number: D092399FX02

Data Sheet: FR-1478
Date: 08Mar95
CPL Code: 0552

GENERAL ENGINE DATA

Type ..... 4 cycle, Inline, 6 cylinder
Aspiration: ..... Turbocharged
Bore - in. (mm) 5.5 (140)
Stroke - in. (mm) 6.0 (152)
Displacement - in.^{3} (litre) 855 (14.0)
Compression Ratio 14.1:1
Valves per Cylinder: - Intake 2
- Exhaust 2
Engine Weight & Center of Gravity (With Standard Accessories)
Reference Installation Diagram 3382636
Dry Weight - lb. (kg) 3250 (1474)
Wet Weight - lb. (kg) 3385 (1535)
C.G. Distance from F.F.O.B. - in. (mm) 19 (483)
C.G. Distance Above Crankshaft Centerline - in. (mm) 5 (127)
Maximum Allowable Bending Moment @ Rear Face of Block - lb.-ft. (N•m) 1000 (1350)

AIR INDUCTION SYSTEM

Maximum Allowable Temperature Rise Between Ambient Air and Engine Air Inlet
(Ambients 50°F [10°C] to 100°F [38°C]) - °F (°C) 30 (15)
Maximum Allowable Intake Restriction With a Dirty Air Filter Element -
in. H_2O (mm H_2O) 25 (635)
Part Number of Standard Air Filter Element (Dry Type) 3022209
Minimum Allowable Ambient Air Temperature - °F (°C) 50 (10)

LUBRICATION SYSTEM

Oil Pressure @ Rated Speeds - PSI (kPa) ..... 50 - 70 (345 - 483)
Oil Flow @ Maximum Rated Speeds (Nominal) - U.S. GPM (litre/s) ..... 33 (2.1)@1760/40 (2.5)@2100
Oil Pan Capacity (High - Low) U.S. gal. (litre) 7-6 (26-23)
Full Flow Lube Oil Filter Capacity - U.S. gal. (litre) 7.6 (28.8)
Part Number of Standard Oil Pan 193631
Part Number of Standard Oil Filter Element 3889310

Application Note: When ambient temperatures will be lower than 70°F (21°C) an oil heater is required. The recommended heater wattage for this engine is 300 down to 50°F (10°C).

COOLING SYSTEM

Heat Exchanger Cooled (Shell & Tube Type)
Part Number of Tube Bundle 3008844
Raw Water Working Pressure Range at Heat Exchanger - PSI (kPa) ..... 50 (345) MAX
Recommended Minimum Water Supply Pipe Size to
Heat Exchanger (Reference Only) - in. (mm) dia 1.25 (31.8)
Recommended Minimum Water Discharge Pipe Size From
Heat Exchanger (Reference Only) - in. (mm) dia 1.50 (38.1)
Coolant Water Capacity (Engine Side) - U.S. gal. (litre) 10.5 (40)
Standard Thermostat - Type ..... Modulating
- Range - °F (°C) 175-197 (79-92)
Minimum Raw Water Flow with Water
Temperatures to 90°F (32°C) - U.S. GPM (litre/s) 34 (2.1)

Note: Minimum raw water requirement is based on water flow required to minimize tube fouling in the heat exchanger tube bundle.

A jacket water heater is mandatory on this engine. The recommended heater wattage is 2500 down to 50°F (10°C).

EXHAUST SYSTEM

Maximum Allowable Back Pressure Imposed by Piping &
Silencer - in. Hg (mm Hg) 3 (75)
Exhaust Pipe Size Normally Acceptable - in. (mm) dia..... 5 (125)

FUEL SYSTEM

Supply Line Size - in. (mm)..... 0.625 (16) O.D. Tube
Drain Line Size - in. (mm) ..... 0.625 (16) O.D. Tube
Maximum Fuel Height Above ℄L Crankshaft - in. (mm) 80 (2030)
Part Number of Standard Fuel Filter 3315847
Part Number of Standard Fuel Filter Element..... FF-105D
Maximum Allowable Restriction to Fuel Pump with Dirty Filter - in. Hg (mm Hg) 8 (200)
Maximum Allowable Return Line Restriction - in. Hg (mm Hg)..... 4 (100)

ELECTRICAL SYSTEM

Battery Voltage 24
Battery Cable Size (Maximum Cable Length Not to Exceed 10 ft. (3.0 m) AWG) 00
Wiring for Automatic Starting (Negative Ground)..... Standard
Alternator (Standard) 24 Volt, Internally Regulated - Ampere..... 35 or 45
Manually Operable Contactors ..... Standard

Minimum Recommended Battery Capacity	Amp-hr.	0°F CCA
70°F (21°C) Minimum Temperature	100	450
32°F (0°C) Minimum Temperature	150	640

Reference Wiring Diagram Number..... 3382636

PERFORMANCE DATA

All data is based on the engine operating with fuel system, water pump, lubricating oil pump, air cleaner, and alternator; not included are compressor, fan, optional equipment and driven components. Data is based on operation at SAE standard J816b conditions of 500 feet (150 m) altitude (29.00 in. [736 mm] Hg dry barometer), 85°F (29°C) intake air temperature and 0.38 in. (9.6 mm) Hg water vapor pressure, using No. 2 diesel or a fuel corresponding to ASTM D2. All data is subject to change without notice.

Altitude Above Which Output Should be Limited - ft.(m)..... 500 (150)
Correction Factor per 1000 ft. (300 m) above Altitude Limit 3%
Temperature Above Which Output Should be Limited -°F(°C)..... 85 (29)
Correction Factor per 10°F (11°C) Above Temperature Limit 1% (2%)

FM Approved and UL Listed Ratings For: NT855-F3

Listed/ Approved Ratings BHP (kW)	Engine Speed RPM	Ventilation Air Required for Combustion CFM (litre/s)	Heat Rejection to Coolant BTU/min (kW)	Heat Rejection to Ambient Air* BTU/min (kW)	Exhaust Gas Flow CFM (litre/s)	Exhaust Gas Temp. °F (°C)	Fuel Consumption Gal/h (litre/h)
300 (224)	2100	857 (405)	8600 (151)	1130 (20)	2225 (1050)	850 (454)	16.1 (60.9)
290 (216)	1760	708 (334)	7500 (132)	1060 (19)	1772 (836)	900 (482)	15.9 (60.2)

* - Does not include exhaust piping.

Cummins Engine Company, Inc.

Exhaust Emissions Data Sheet

Data Sheet: DS-1478
Date: 08Mar95

Engine

Model:	NT855-F3	**Application:**	Firepump
Type:	4 cycle, In-Line, 6 Cylinder Diesel	**Config. Number:**	D092399FX02
Aspiration:	Turbocharged	**Bore:**	5.50 in. (140 mm)
Compression Ratio:	14.1:1	**Stroke:**	6.00 in. (152 mm)
Emissions Control Device:	Turbocharger	**Displacement:**	855 cu. in. (14.0 liters)

Performance Data	2100 RPM	1760 RPM
BHP	300	290
Fuel Consumption (gallons/hour)	16.1	15.9
Air to Fuel Ratio	33.1	27.7
Exhaust Gas Flow (CFM)	2225	1772
Exhaust Gas Temperature (^{o}F)	850	900

Exhaust Emissions Data

(All values are grams/hp-hour)

Component		2100 RPM	1760 RPM
HC	(Total Unburned Hydrocarbons)	0.19	0.09
NOx	(Oxides of Nitrogen as NO_2)	11.20	11.50
CO	(Carbon Monoxide)	0.90	0.40
PM	(Particulate Matter)	0.50	0.50
SO_2	(Sulfur Dioxide)	0.67	0.69
CO_2	(Carbon Dioxide)	550	560
N_2	(Nitrogen)	4400	3700
O_2	(Oxygen)	760	550
H_2O	(Water Vapor)	200	200

Test Conditions

Data was recorded during steady-state rated engine speed (± 25 RPM) with full load (± 2%). Pressures, temperatures, and emission rates were stabilized.

Fuel Specification:	ASTM D975 No. 2-D diesel fuel with 0.2% sulfur content (by weight) and 42-50 cetane number.
Fuel Temperature:	99° F ± 9° (at fuel pump inlet)
Intake Air Temperature:	77° F ± 9°
Barometric Pressure:	29.6 in. Hg ± 1 in. Hg
Humidity:	NOx measurement corrected to 75 grains H_2O/lb. dry air

The HC, NOx, and CO emissions data tabulated here were taken from a single engine under the test conditions shown above. Data for the other components are estimates. This data is subject to instrumentation, measurement, and engine-to-engine variability. Engine operation with excessive air intake or exhaust restriction beyond published maximum limits, or with improper maintenance, may result in elevated emission levels.

DRAWING NO
3032671

REVISIONS					
REV.	DESCRIPTION	MFR DATE	MFR APP'D	DATE	APP'D
01	REV. PER 871061	6-23-87 GP	7-2-87 D.C.K.	6/23/87	
02	REV. PER 883088	3-15-88 WLM	3-15-88 JP		
03	REV. PER 921077	3-26-92 BSP	4-18-92 MEH		

SERVICE CONNECTIONS

FUEL INLET CONN: 7/8-14 UNF-2A TH'D. WITH 45° TIP

FUEL RETURN TO TANK: 3/4-16 UNF-2A TH'D. WITH 45° TIP

OIL DRAIN: 1 NPTF

CYLINDER BLOCK DRAIN: 1/4 NPTF

EXHAUST OUTLET CONN: 5.00 (127) O.D.

RAW WATER INLET CONN.: 2 NPTF

RAW WATER OUTLET CONN.: $2\frac{1}{2}$ NPTF

OIL IMMERSION HEATER: 1 NPTF

WIRING DIAGRAM NO. 3031644

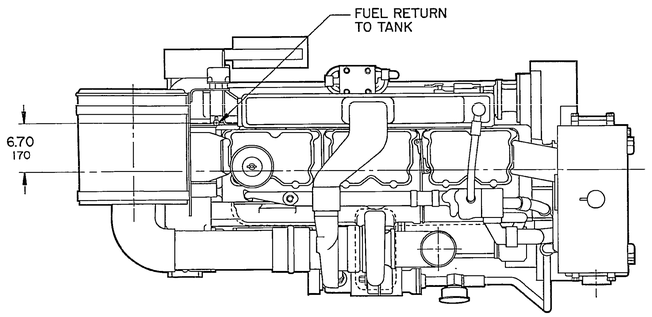

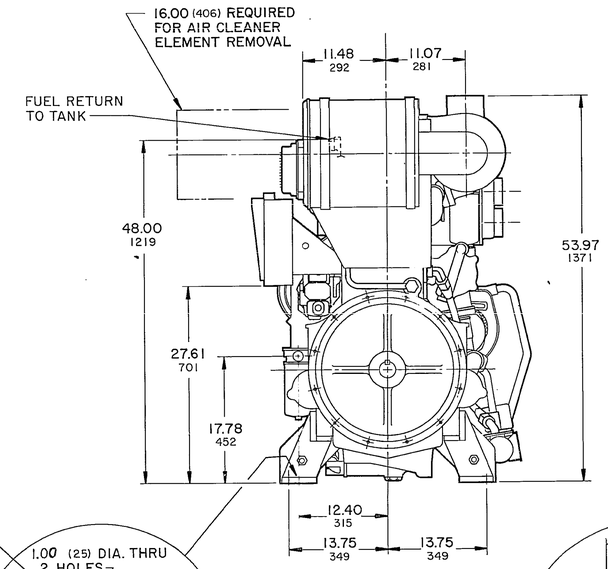

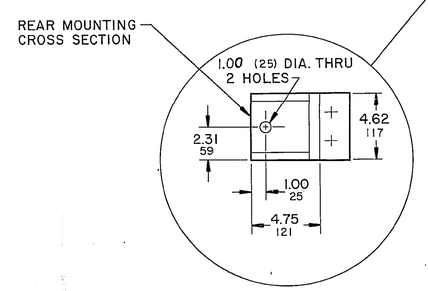

1/4 SCALE

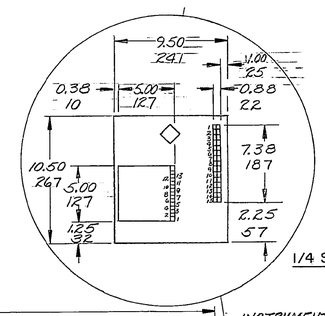

1/4 SCALE

INSTRUMENT PANEL MOUNTING CONTAINS SINGLE TERMINAL STRIP MOUNTED ON BACK PLATE WITH SPEED SWITCH AND RECTIFIER. FIRE PUMP CONTROLLER TO BE WIRED TO LEFT ACCESS LOCATIONS ON TERMINAL STRIP.

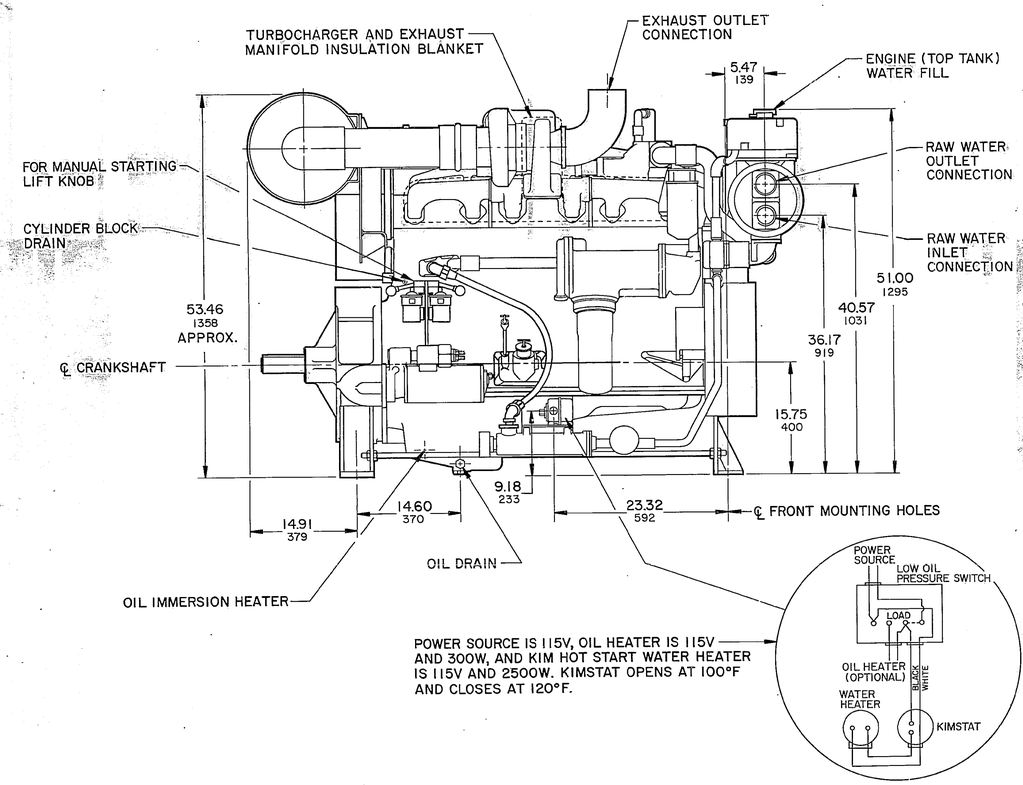

LOW OIL PRESSURE SWITCH WIRING DIAGRAM

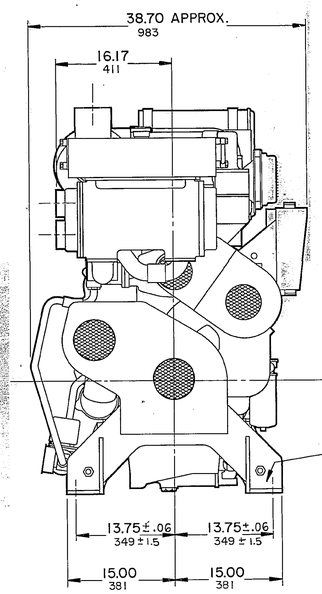

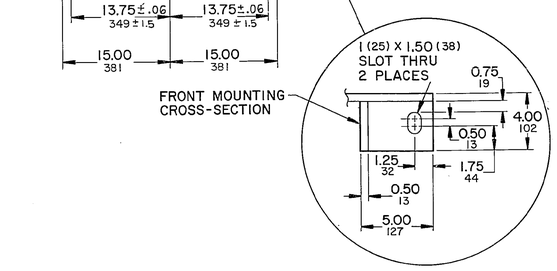

1/4 SCALE

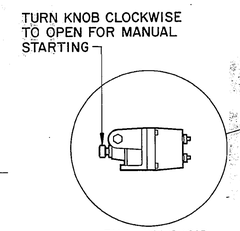

FUEL SOLENOID

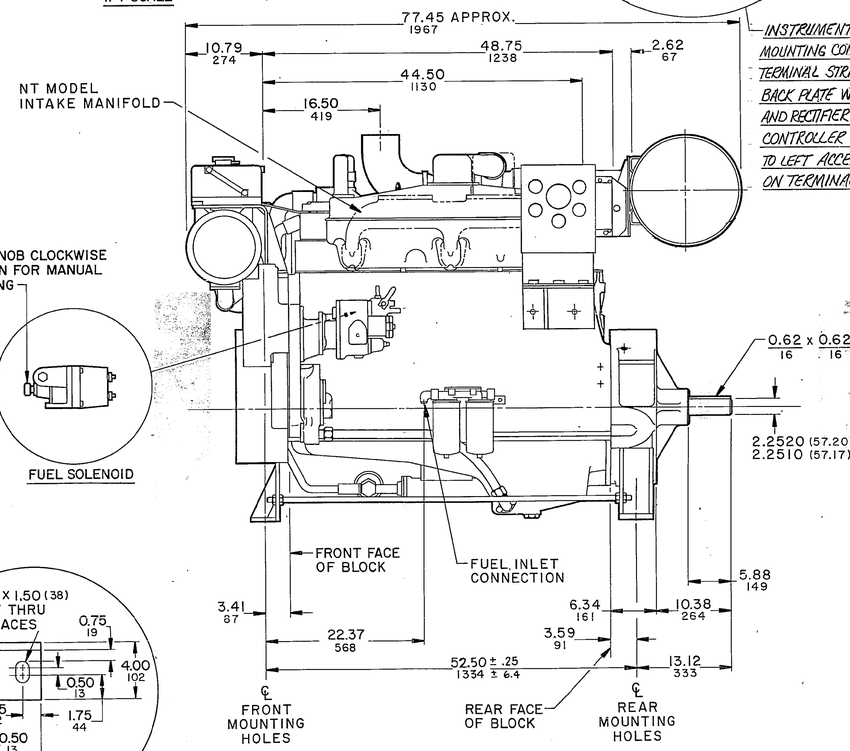

NOTE: ALL DIMENSIONS IN INCHES AND MILLIMETERS.

THIRD ANGLE PROJECTION

DO NOT SCALE THIS DRAWING

THIS DRAWING AND THE DATA SHOWN THEREON IS CONFIDENTIAL AND PROPRIETARY AND SHALL NOT BE USED OR DISCLOSED TO OTHERS OR REPRODUCED FOR ANY PURPOSE EXCEPT FOR CONSTRUCTION PURPOSES BY CUMMINS ENGINE COMPANY, INC. AND OR ITS SUBSIDIARIES WITHOUT THE PRIOR WRITTEN CONSENT TO THE USE OF SUCH DRAWING AND OR DATA

DWN	10/16/81	
CHD		
REV		
TRCD		
APPD		
APPD		
APPD		
APPROVED		DATE

Cummins

ITEM NAME: NT/NTA FIRE PUMP

IDENTIFIER: INSTALLATION DIAGRAM

SIZE: E | CODE IDENT NO | DRAWING NO: 3032671

SCALE: 1/8 | DRAWING CONTROL | SHEET ___ OF ___

3032671