Workshop Manual

Audi A8 2003 ➤

6-cylinder engine, mechanics									
Engine ID	ASN	BBJ							

Edition 12.2009

Protected by copyright. Copying for private or commercial purposes, in part or in whole, is not permitted unless authorised by AUDI AG. AUDI AG does not guarantee or accept any liability with respect to the correctness of information in this document. Copyright by AUDI AG.

List of Workshop Manual Repair GroupsList of Workshop Manual Repair GroupsList of Workshop Manual Repair Groups

Repair Group

00 - Technical data
10 - Removing and installing engine
13 - Crankshaft group
15 - Cylinder head, valve gear
17 - Lubrication
19 - Cooling
26 - Exhaust system

Protected by copyright. Copying for private or commercial purposes, in part or in whole, is not permitted unless authorised by AUDI AG. AUDI AG does not guarantee or accept any liability with respect to the correctness of information in this document. Copyright by AUDI AG.

Technical information should always be available to the foremen and mechanics, because their careful and constant adherence to the instructions is essential to ensure vehicle road-worthiness and safety. In addition, the normal basic safety precautions for working on motor vehicles must, as a matter of course, be observed.

All rights reserved.
No reproduction without prior agreement from publisher.

Copyright © 2010 Audi AG, Ingolstadt

A0051006620

Contents

00 - Technical data . . . 1
1 Technical data . . . 1
1.1 Engine number . . . 1
1.2 Engine data . . . 2
2 Safety precautions . . . 3
2.1 Working on the fuel system . . . 3
2.2 Procedure before opening high-pressure section of injection system . . . 3
2.3 Working on the cooling system . . . 4
2.4 Using testers and measuring instruments during a road test . . . 4
2.5 Working on the exhaust system . . . 4
3 Contact corrosion! . . . 5
4 General repair instructions . . . 6
4.1 Rules for cleanliness when working on fuel supply system, injection system and turbocharger . . . 6
4.2 Checking fuel system for leaks . . . 6
4.3 Foreign particles in engine . . . 6
4.4 Contact corrosion! . . . 6
4.5 Routing and attachment of pipes, hoses and wiring . . . 7
4.6 Checking vacuum system . . . 7
4.7 Installing radiators and condensers . . . 8

10 - Removing and installing engine . . . 9
1 Removing and installing engine . . . 9
1.1 Removing and installing engine . . . 9
1.2 Removing . . . 10
1.3 Securing engine to engine stand . . . 28
1.4 Installing . . . 28
1.5 Tightening torques . . . 30

13 - Crankshaft group . . . 32
1 Dismantling and assembling engine . . . 32
1.1 Poly V-belt drive - exploded view . . . 32
1.2 Removing and installing poly V-belt . . . 33
1.3 Removing and installing tensioner for poly V-belt . . . 35
1.4 Removing and installing vibration damper . . . 36
2 Removing and installing sealing flanges and dual-mass flywheel/flywheel/drive plate . . . 39
2.1 Sealing flanges and dual-mass flywheel/flywheel/drive plate - exploded view . . . 39
2.2 Renewing crankshaft oil seal (pulley end) . . . 40
2.3 Removing and installing sealing flange (front) . . . 42
2.4 Removing and installing sealing flange (rear) . . . 45
2.5 Removing and installing flywheel . . . 47
3 Removing and installing crankshaft . . . 49
3.1 Crankshaft dimensions . . . 52
3.2 Measuring axial clearance . . . 52
3.3 Measuring radial clearance . . . 52
3.4 Removing and installing drive chain sprocket for oil pump . . . 53
4 Dismantling and assembling pistons and conrods . . . 55
4.1 Piston and cylinder dimensions . . . 58
4.2 Checking radial clearance of conrods . . . 58

15 - Cylinder head, valve gear . . . 59
1 Toothed belt drive . . . 59

Protected by copyright. Copying for private or commercial purposes, in part or in whole, is not permitted unless authorised by AUDI AG. AUDI AG does not guarantee or accept any liability with respect to the correctness of information in this document. Copyright by AUDI AG.

1.1 Toothed belt covers - exploded view . . . 59
1.2 Toothed belt drive - exploded view . . . 60
1.3 Removing and installing toothed belt . . . 62
2 Removing and installing cylinder head . . . 72
2.1 Cylinder head - exploded view of components . . . 73
2.2 Removing and installing cylinder head cover (left-side) . . . 74
2.3 Removing and installing cylinder head cover (right-side) . . . 76
2.4 Removing cylinder head (left-side) . . . 79
2.5 Removing cylinder head (right-side) . . . 83
2.6 Installing cylinder head . . . 88
2.7 Checking compression . . . 91
3 Intake manifold . . . 94
3.1 Intake manifold - exploded view of components . . . 94
3.2 Removing and installing intake manifold . . . 94
4 Servicing valve gear . . . 99
4.1 Valve gear - exploded view of components . . . 99
4.2 Camshaft adjustment - exploded view of components . . . 102
4.3 Checking axial clearance of camshafts . . . 103
4.4 Renewing camshaft oil seals . . . 103
4.5 Removing and installing camshafts and camshaft adjuster . . . 105
4.6 Checking hydraulic bucket tappets . . . 113
4.7 Renewing valve stem oil seals with cylinder head installed . . . 115
4.8 Renewing valve stem oil seals with cylinder head removed . . . 119
4.9 Checking valve guides . . . 122
4.10 Checking valves . . . 123
4.11 Machining valve seats . . . 123
5 Checking camshaft adjustment . . . 125
5.1 Testing the system . . . 125
5.2 Testing camshaft adjustment (exhaust) . . . 127
5.3 Checking camshaft adjustment (inlet) . . . 128
5.4 Checking solenoid valves for camshaft adjustment . . . 129
5.5 Electrical test of solenoid valves for camshaft adjustment . . . 131
5.6 Checking internal resistance . . . 132
5.7 Checking voltage supply . . . 132
5.8 Checking activation . . . 133

17 - Lubrication . . . 134
1 Removing and installing parts of the lubrication system . . . 134
1.1 Sump (bottom section), oil pump - exploded view of components . . . 134
1.2 Removing and installing sump (bottom section) . . . 135
1.3 Removing and installing oil pump . . . 138
1.4 Sump (top section), oil filter - exploded view of components . . . 143
1.5 Removing and installing sump (top section) . . . 145
1.6 Removing and installing drive chain and chain tensioner for oil pump . . . 156
1.7 Oil retention valve and spray nozzle valve - exploded view of components . . . 157
1.8 Checking oil pressure and oil pressure switch . . . 159
1.9 Engine oil . . . 161
1.10 Checking oil level . . . 161

19 - Cooling . . . 162
1 Cooling system - on engine . . . 162
1.1 Draining and filling cooling system . . . 163
1.2 Coolant pump and thermostat - exploded view . . . 169
1.3 Removing and installing coolant pump . . . 169
1.4 Removing and installing thermostat . . . 171

Protected by copyright. Copying for private or commercial purposes, in part or in whole, is not permitted unless authorised by AUDI AG. AUDI AG does not guarantee or accept any liability with respect to the correctness of information in this document. Copyright by AUDI AG.

1.5 Checking thermostat . . . 173
1.6 Coolant pipes - exploded view of components . . . 174
1.7 Removing and installing coolant pipe (front) . . . 175
1.8 Removing and installing coolant pipe (left-side) . . . 176
1.9 Removing and installing coolant pipe (right-side) . . . 179
1.10 Removing and installing coolant pipe (rear) . . . 180
1.11 Removing and installing coolant pipe leading to alternator . . . 182

2 Cooling system - on body . . . 185
2.1 Radiator and radiator fan - exploded view of components . . . 185
2.2 Removing and installing radiator . . . 185
2.3 Removing and installing radiator cowl . . . 189
2.4 Removing and installing radiator fan . . . 190
2.5 Checking cooling system for leaks . . . 191

26 - Exhaust system . . . 193

1 Removing and installing parts of exhaust system . . . 193
1.1 Exhaust system - exploded view of components . . . 193
1.2 Separating front exhaust pipe and front silencer . . . 197
1.3 Separating centre and rear silencers . . . 198
1.4 Removing and installing front exhaust pipe (left-side) with catalytic converter . . . 199
1.5 Removing and installing front exhaust pipe (right-side) with catalytic converter . . . 205
1.6 Removing and installing exhaust manifold (left-side) . . . 212
1.7 Removing and installing exhaust manifold (right-side) . . . 213
1.8 Stress-free alignment of exhaust system . . . 215
1.9 Checking exhaust system for leaks . . . 217

2 Servicing secondary air system . . . 218
2.1 Principle and function . . . 218
2.2 Checking secondary air inlet valve N112 . . . 221
2.3 Checking secondary air pump relay J299 and activation . . . 225
2.4 Checking voltage supply of secondary air pump relay J299 . . . 226
2.5 Checking activation of secondary air pump relay . . . 228
2.6 Checking voltage supply of secondary air pump motor V101 . . . 229
2.7 Removing and installing secondary air pump motor V101 . . . 231
2.8 Checking combination valve for secondary air system for proper operation and leakage . . . 232
2.9 Removing and installing combination valve for secondary air system (left-side) . . . 235
2.10 Removing and installing combination valve for secondary air system (right-side) . . . 236

Protected by copyright. Copying for private or commercial purposes, in part or in whole, is not permitted unless authorised by AUDI AG. AUDI AG does not guarantee or accept any liability with respect to the correctness of information in this document. Copyright by AUDI AG.

Protected by copyright. Copying for private or commercial purposes, in part or in whole, is not permitted unless authorised by AUDI AG. AUDI AG does not guarantee or accept any liability with respect to the correctness of information in this document. Copyright by AUDI AG.

00 – Technical data

1 Technical data

1.1 Engine number

Note

A number of steps are required to make the engine number visible.

– Pull off front engine cover -arrows-.

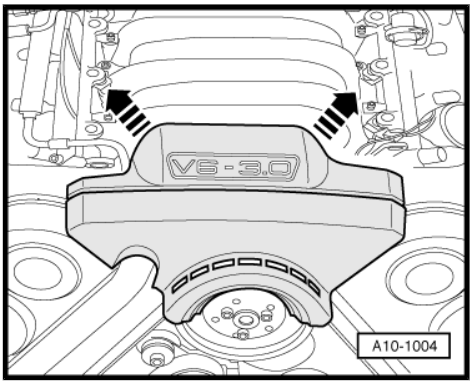

There is a sticker on the vacuum unit housing for intake manifold change-over function indicating the “Engine code” and “Serial number” -arrow-.

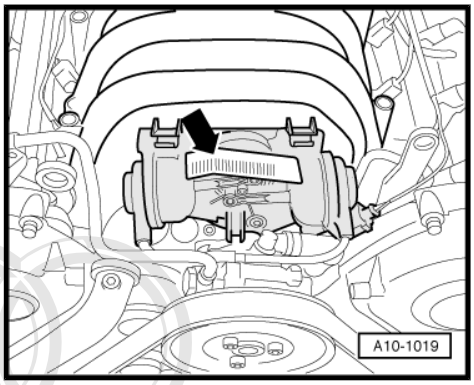

If the sticker is missing and you require the “Engine code”, proceed as follows:

– Pull off rear engine cover -arrows-.

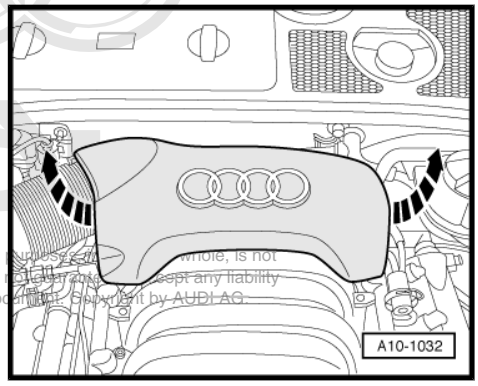

Protected by copyright. Copying for private or commercial purposes, in part or in whole, is not permitted unless authorised by AUDI AG. AUDI AG does not guarantee or accept any liability with respect to the correctness of information in this document. Copyright by AUDI AG.

The engine code is stamped on the rear of the cylinder head (left-side) -arrow-.

The engine code is also included on the vehicle data sticker.

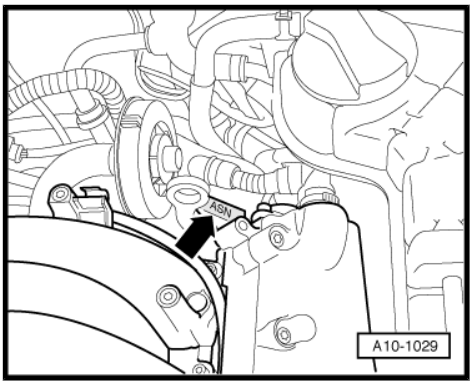

1.2 Engine data

Code letters		ASN	BBJ
Capacity	ltr.	2.976	2.976
Power output	kW at rpm	162/6300	160/6300
Torque	Nm at rpm	300/3200	300/3200
Bore	∅ in mm	82.5	82.5
Stroke	mm	92.8	92.8
Compression		10.3	10.3
RON		98 1)	98 1)
Injection/ignition system		Bosch Motronic	Bosch Motronic
Exhaust gas recirculation		no	no
Turbocharging/super-charging		no	no
Knock control		yes	yes
Camshaft timing control		yes	yes
Intake manifold change-over		yes	yes
Secondary air system		yes	yes

1) Unleaded premium RON 95 can also be used, but results in reduced power

Protected by copyright. Copying for private or commercial purposes, in part or in whole, is not permitted unless authorised by AUDI AG. AUDI AG does not guarantee or accept any liability with respect to the correctness of information in this document. Copyright by AUDI AG.

2 Safety precautions

2.1 Working on the fuel system

When working on the fuel system note the following warnings:

WARNING

The fuel system operates at extremely high pressure. This can cause injury.

- *The fuel pressure in the high-pressure section of the injection system must be reduced to a residual pressure prior to opening the system.*
- *Wrap a clean cloth around the connection and carefully loosen the connection to allow the residual pressure to dissipate.*

– Procedure before opening high-pressure section of injection system ⇒ Rep. Gr. 24 .

Observe the following to prevent injuries to persons and damage to the injection and ignition system:

- Always switch off the ignition before connecting or disconnecting electrical wiring for the injection or ignition system or tester cables.
- Always switch off ignition before washing engine.
- Faults are stored in engine control units if electrical connectors were unplugged and engine was started: “Generate readiness code” in “Guided Functions” ⇒ Vehicle diagnostic tester .

Caution

To prevent damage to the electronic components when disconnecting the battery:

- *Observe notes on procedure for disconnecting the battery.*
- *Always switch off the ignition before disconnecting the battery.*

Reproduction of this Service Information document or any part of its contents is not permitted unless authorised by AUDI AG. AUDI AG does not guarantee or accept any liability with respect to the correctness of information in this document. Copyright by AUDI AG.

– Disconnect battery ⇒ Rep. Gr. 27 .

2.2 Procedure before opening high-pressure section of injection system

WARNING

- *The injection system consists of a high-pressure section (maximum approx. 120 bar) and a low-pressure section (approx. 6 bar).*
- *The fuel pressure in the high-pressure section must be reduced to a residual pressure of approx. 6 bar prior to opening the system. Procedure ⇒ Rep. Gr. 24 .*

2.3 Working on the cooling system

When working on the cooling system note the following warnings:

WARNING

Hot steam/hot coolant can escape - risk of scalding.

- *The cooling system is under pressure when the engine is hot.*
- *To allow pressure to dissipate, cover filler cap on expansion tank with cloth and open carefully.*

Caution

Overheating can occur if the filler cap is not fitted properly.

- *The filler cap must engage positively and audibly when it is closed.*

2.4 Using testers and measuring instruments during a road test

Note the following if testers and measuring instruments have to be used during a road test:

WARNING

Accidents can be caused if the driver is distracted by test equipment while road-testing, or if test equipment is not properly secured.

Persons sitting in the front passenger's seat could be injured if the airbag is triggered in an accident.

- *The use of test equipment while driving causes distraction.*
- *There is an increased risk of injury if test equipment is not secured.*
- *Test equipment must always be secured on the rear seat with a strap and operated from the rear seat by a second person.*

Protected by copyright. Copying for private or commercial purposes, in part or in whole, is not permitted unless authorised by AUDI AG. AUDI AG does not guarantee or accept any liability with respect to the correctness of information in this document. Copyright by AUDI AG.

2.5 Working on the exhaust system

When working on the exhaust system please note the following:

Caution

Avoid damage to flexible joint.

- *Do not bend flexible joint more than 10°.*
- *Install flexible joint so that it is not under tension.*
- *Take care not to damage wire mesh on flexible joint.*

3 Contact corrosion!

- Contact corrosion can occur if unsuitable fasteners are used (e.g. bolts. nuts, washers, etc.).
- For this reason, only fasteners with a special surface coating are used. These elements can be recognised by their greenish colour.
- In addition, all rubber parts, plastic parts and adhesives are made of non-conductive materials.
- Always fit new components when in doubt about the reuseability of old components.

WARNING

- *Only use genuine Audi parts.*
- *Accessories must be approved by AUDI AG.*
- *Damage caused by contact corrosion is not covered under warranty.*

Protected by copyright. Copying for private or commercial purposes, in part or in whole, is not permitted unless authorised by AUDI AG. AUDI AG does not guarantee or accept any liability with respect to the correctness of information in this document. Copyright by AUDI AG.

4 General repair instructions

4.1 Rules for cleanliness when working on fuel supply system, injection system and turbocharger

Even small amounts of dirt can cause malfunctions. For this reason, please observe the following rules when working on the fuel supply system, injection system and turbocharger:

- Carefully clean connection points and the surrounding area with engine cleaner or brake cleaner and dry thoroughly before opening.
- Seal off open pipes/lines and connections immediately with clean plugs, e.g. from engine bung set -VAS 6122- .
- Place parts that have been removed on a clean surface and cover them over. Use only lint-free cloths.
- Carefully cover or seal open components if repairs cannot be carried out immediately.
- Only install clean components; replacement parts should only be unpacked immediately prior to installation. Do not use parts that have not been stored in their packing (e.g. in tool boxes etc.).
- When the system is open, do not work with compressed air and do not move the vehicle.
- Protect unplugged electrical connectors against dirt and moisture and make sure connections are dry when attaching.

4.2 Checking fuel system for leaks

- Allow engine to run for several minutes at moderate rpm.
- Switch off ignition.
- Check complete fuel system for leaks.
- If leaks are found although the connections have been tightened to the correct torque, the relevant component must be renewed.
- Road-test vehicle and accelerate with full throttle at least once.
- Then inspect high-pressure section of fuel system again for leaks.

4.3 Foreign particles in engine

- When performing assembly work on engine, all open passages in the intake and exhaust systems must be sealed with suitable plugs (e.g. from engine bung set -VAS 6122-) to prevent foreign particles from entering the engine.
- In the event of mechanical damage to one of the cylinder banks, the intake and exhaust systems and combustion chambers of the opposite cylinder bank must always be examined for foreign particles to prevent further damage occurring later.

Protected by copyright. Copying for private or commercial purposes, in part or in whole, is not permitted unless authorised by AUDI AG. AUDI AG does not guarantee or accept any liability with respect to the correctness of information in this document. Copyright by AUDI AG.

4.4 Contact corrosion!

Contact corrosion can occur if unsuitable fasteners are used (e.g. bolts, nuts, washers, etc.).

For this reason, only fasteners with a special surface coating are used.

Additionally, all rubber and plastic parts and all adhesives are made of non-conductive materials.

Always install new parts if you are not sure whether used parts can be re-fitted ⇒ Electronic parts catalogue .

Note the following:

- We recommend using only genuine replacement parts; these have been tested and are compatible with aluminium.
- We recommend the use of Audi accessories.
- Damage caused by contact corrosion is not covered under warranty.

4.5 Routing and attachment of pipes, hoses and wiring

- Mark fuel lines, hydraulic lines, vacuum lines, lines for activated charcoal filter system and electrical wiring etc. before removal so they can be re-installed in the original positions and correctly connected. Make sketches or take photographs if necessary.
- To prevent damaging pipes, hoses and wiring, ensure sufficient clearance from all moving or hot components in engine compartment (little space in engine compartment).

This document is protected by copyright. Reproduction, in whole or in part, is not permitted without the express consent of AUDI AG. AUDI AG does not guarantee or accept any liability with respect to the correctness of information in this document. Copyright by AUDI AG.

4.6 Checking vacuum system

Special tools and workshop equipment required

- Hand vacuum pump -VAS 6213-

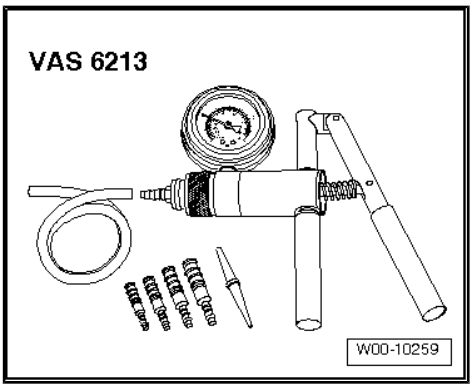

Procedure

– Check all vacuum lines in the complete vacuum system for:
- Cracks
- Traces of animal bites
- Kinked or crushed lines
- Lines porous or leaking

– Check vacuum line to solenoid valve and from solenoid valve to corresponding component.

– If a fault is stored in the fault memory, check the vacuum lines leading to the corresponding component and also check the remaining vacuum lines in the system.

– If it is not possible to build up a vacuum with the hand vacuum pump -VAS 6213- or if the vacuum pressure drops again immediately, check the hand vacuum pump and connecting hoses for leaks.

4.7 Installing radiators and condensers

Even when the radiator and condenser are correctly installed, slight impressions may be visible on the fins of these components. This does not mean that the components are damaged. If the fins are only very slightly distorted, this does not justify renewal of the radiator or the condenser.

Protected by copyright. Copying for private or commercial purposes, in part or in whole, is not permitted unless authorised by AUDI AG. AUDI AG does not guarantee or accept any liability with respect to the correctness of information in this document. Copyright by AUDI AG.

10 – Removing and installing engine

1 Removing and installing engine

1.1 Removing and installing engine

Note

- *Renew all cable ties which are opened or cut open when removing the engine. Refit in the same position when installing the engine.*
- *The engine is removed upwards without gearbox.*
- *Collect drained coolant in a clean container for re-use or disposal.*

Protected by copyright. Copying for private or commercial purposes, in part or in whole, is not permitted unless authorised by AUDI AG. AUDI AG does not guarantee or accept any liability with respect to the correctness of information in this document. Copyright by AUDI AG.

Special tools and workshop equipment required

- Support bracket -10-222 A-
- Adapter -10-222 A/20- (additional hooks)
- Hose clamps for hoses up to 25 mm Ø -3094-
- Poly V-belt lever -3299- with bracket -3299/1-
- Drip tray -V.A.G 1306-
- Spark plug connector pliers -V.A.G 1922-

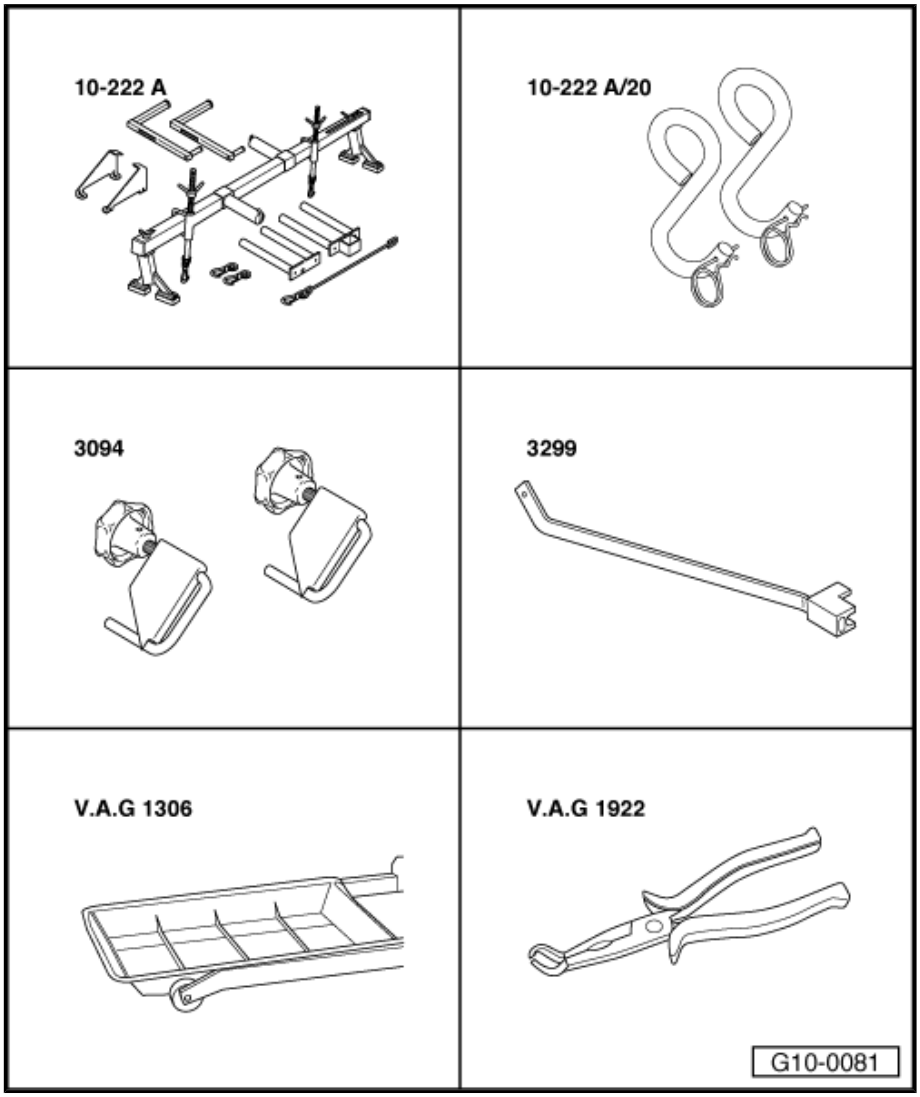

- Puller -T10130-
- Drip tray

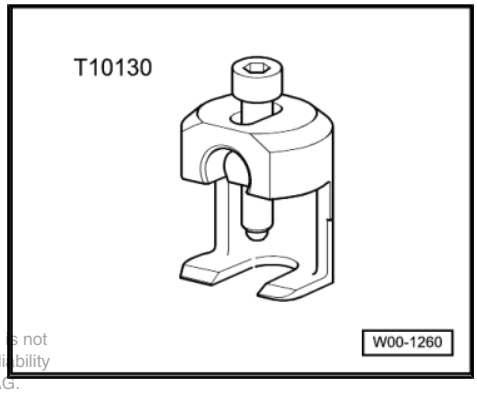

Protected by copyright. Copying for private or commercial purposes, in part or in whole, is not permitted unless authorised by AUDI AG. AUDI AG does not guarantee or accept any liability with respect to the correctness of information in this document. Copyright by AUDI AG.

1.2 Removing

– Activate jacking mode ⇒ Running gear, front-wheel drive and four-wheel drive; Rep. Gr. 43 ; Operating the air suspension .

WARNING

Observe notes on procedure for disconnecting the battery ⇒ Electrical system; Rep. Gr. 27 .

– Switch off ignition.

– Remove luggage compartment side trim cover (right-side) -arrows-.

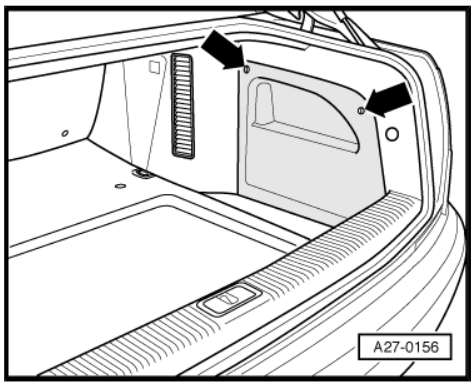

– Remove cover -1- over battery.

Note

Ignore item marked -2-.

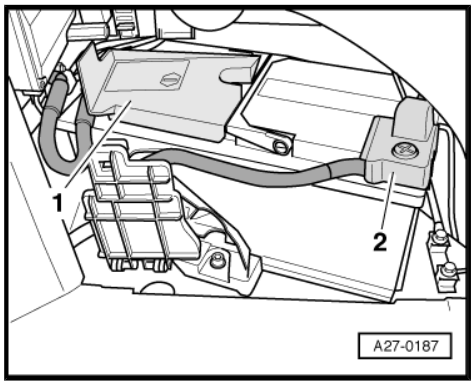

– Disconnect earth cable -arrow- at battery.

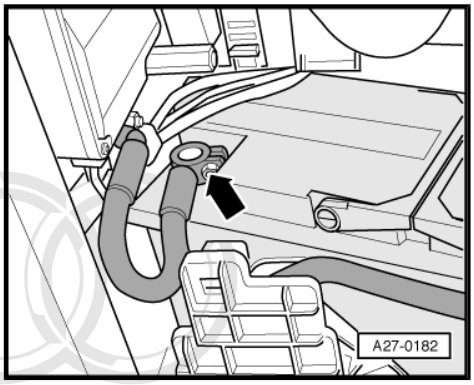

– Pull off rear engine cover -arrows- ...

Protected by copyright. Copying for private or comme
permitted unless authorised by AUDI AG. AUDI AG
with respect to the correctness of information in th

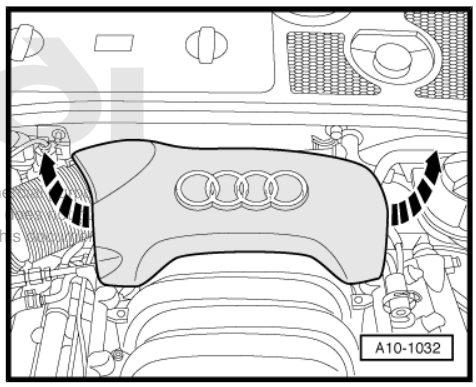

– ... as well as front engine cover -arrows-.

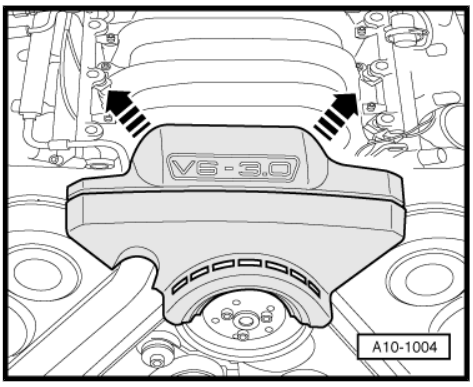

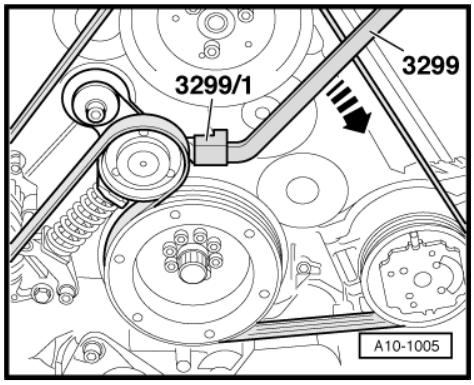

Note

Before removing, mark direction of rotation of poly V-belt with chalk or felt-tipped pen. If the belt runs in the opposite direction when it is refitted, this can cause breakage.

– To slacken the tensioner for poly V-belt, apply pressure to tensioner by moving poly V-belt lever -3299- and bracket -3299/1- in the direction of the arrow.

– Remove poly V-belt from pulley for vane pump.

WARNING

Hot steam or hot coolant can escape when expansion tank is opened; cover filler cap with cloth and open carefully.

– Open filler cap on coolant expansion tank.

– Remove both front wheels.

Note

Secure brake discs with wheel bolts.

– Remove front and rear section of wheel housing liner (front right) ⇒ General body repairs, exterior; Rep. Gr. 66 .

– Vehicles with auxiliary heater: remove bolts -arrows- securing exhaust pipe for auxiliary/additional heater to noise insulation.

Protected by copyright. Copying for private or commercial purposes, in part or in whole, is not permitted unless authorised by AUDI AG. AUDI AG does not guarantee or accept any liability with respect to the correctness of information in this document. Copyright by AUDI AG.

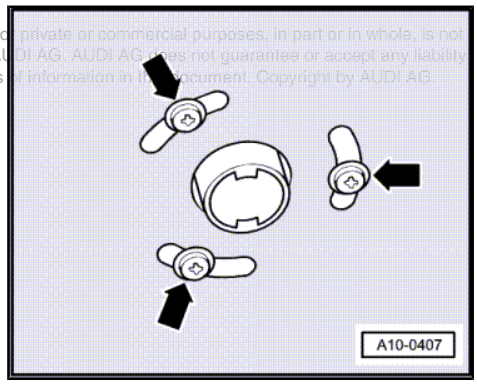

– Loosen quick release fasteners -1- and remove front noise insulation.

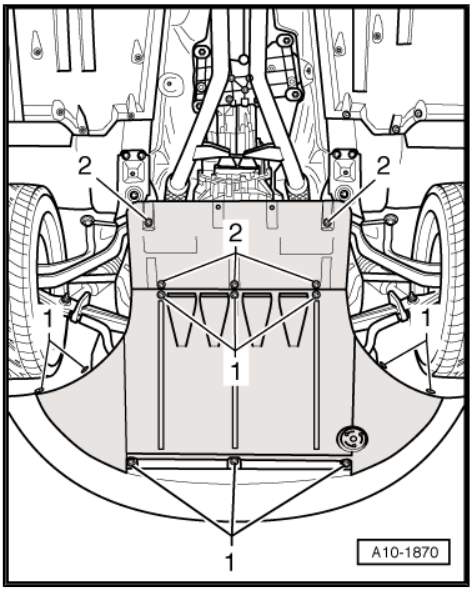

– Unbolt bracket for noise insulation -arrows-.

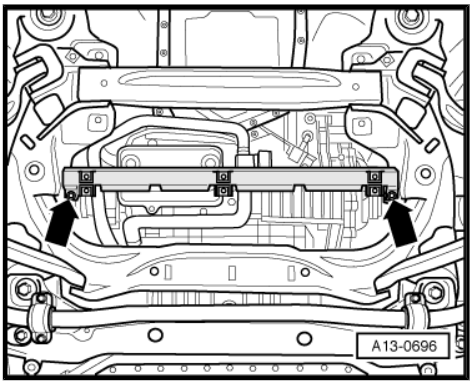

– Unbolt cross piece at lock carrier -arrows-.

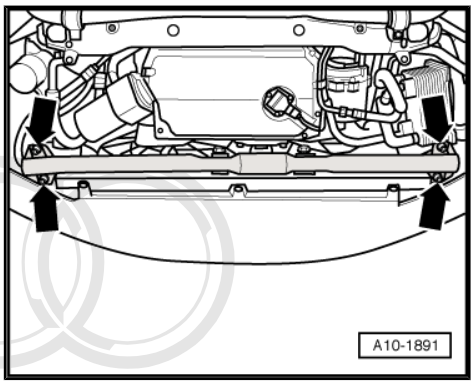

– Unbolt cross piece at stop for torque reaction support -arrows- and remove.

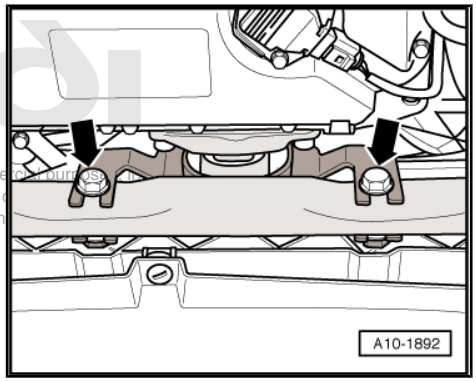

Protected by copyright. Copying for private or commercial purposes, in part or in whole, is not permitted unless authorised by AUDI AG. AUDI AG does not guarantee or assume any liability with respect to the correctness of information in this document.

– Unscrew torque reaction support -arrows- and remove together with stop for torque reaction support.

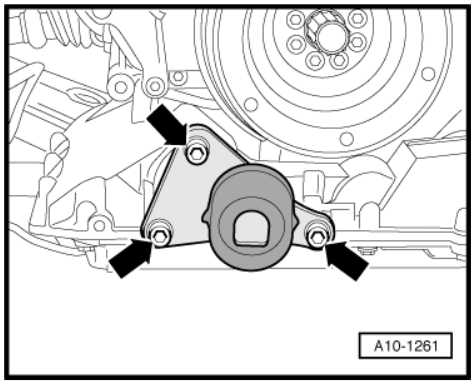

– Place drip tray -V.A.G 1306- under engine.

– Detach coolant hose from bottom left of radiator -arrow- and drain off coolant.

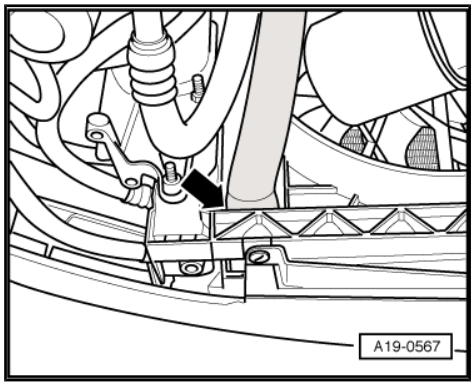

– Disconnect coolant hoses -arrows- from ATF cooler and drain off coolant.

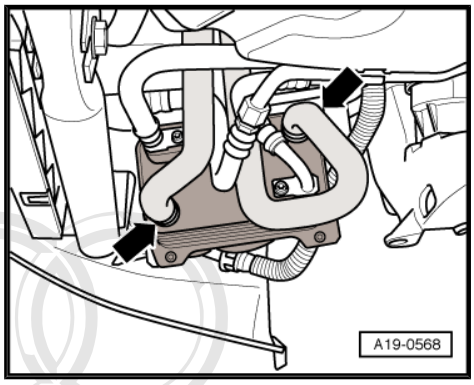

– Also disconnect coolant hose at oil cooler -arrow-, and drain off remaining coolant.

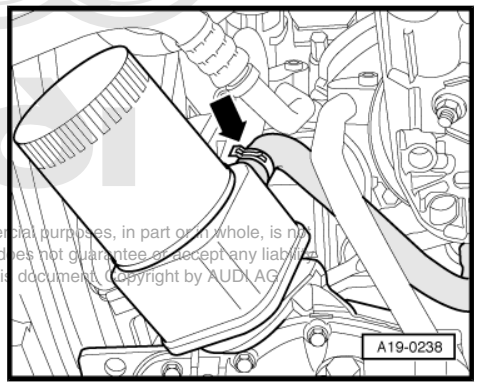

Protected by copyright. Copying for private or commercial purposes, in part or in whole, is not permitted unless authorised by AUDI AG. AUDI AG does not guarantee or accept any liability with respect to the correctness of information in this document. Copyright by AUDI AG.

– Place drip tray below engine.
– Drain engine oil.
– Remove oil filter -2-.
– Place drip tray -V.A.G 1306- under engine.
– Remove coolant hose -3- at oil cooler.
– Remove oil cooler -1-.

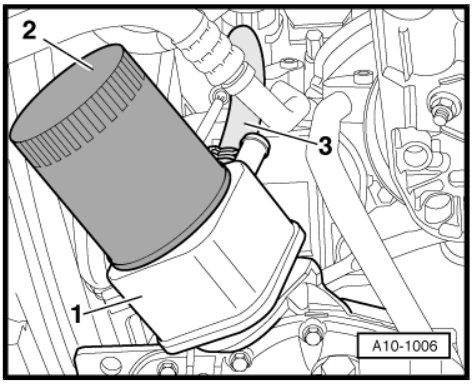

– Unscrew oil pressure pipe -arrow- out of top section of sump.

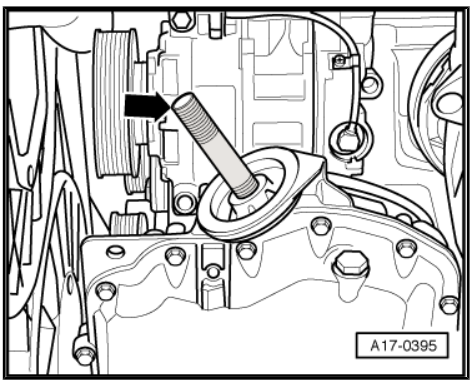

– Disconnect vacuum hose -arrow- going to vacuum reservoir.

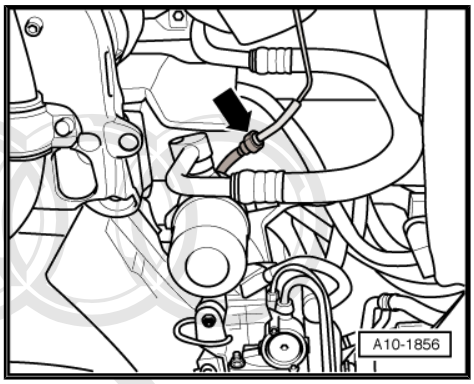

– Unplug electrical connector -1- for magnetic clutch on air conditioner compressor.

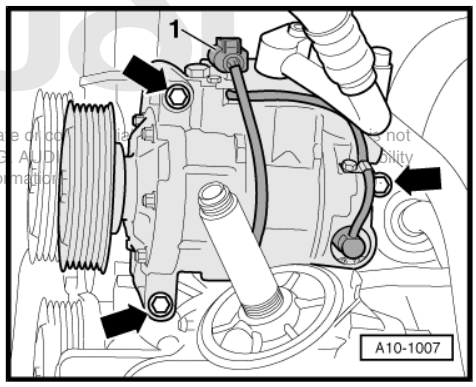

WARNING

Refrigerant circuit of air conditioner must not be opened.

Protected by copyright. Copying for private or commercial purposes, in part or in whole, is not permitted unless authorised by AUDI AG. AUDI AG does not guarantee or assume any liability with respect to the correctness of information.

– Unscrew air conditioner compressor from bracket -arrows-.
– Tie up air conditioner compressor with lines attached to left-side of vehicle.

– Detach coolant hose from engine by releasing retaining clip -arrow-.

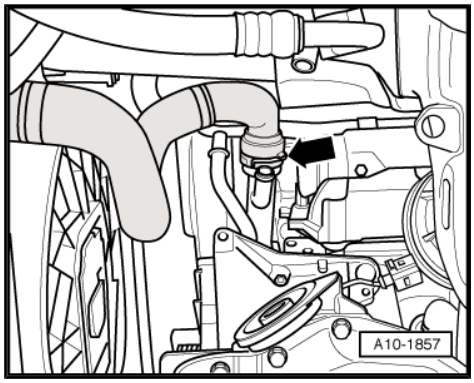

Note

Lay a cloth under the hydraulic hose to catch any escaping hydraulic fluid.

– Use hose clamp -3094- to clamp off hydraulic hose for vane pump.

– Detach hydraulic hose at the connection indicated -arrow-.

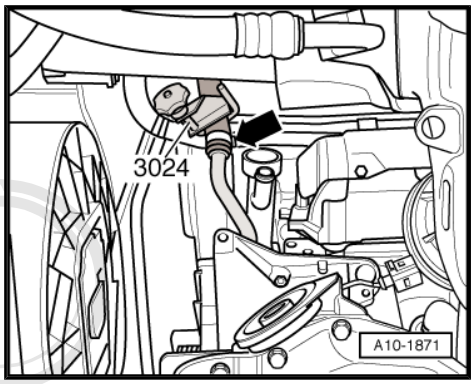

– Unscrew bracket for ATF line (right-side) at bottom section of sump -arrow-.

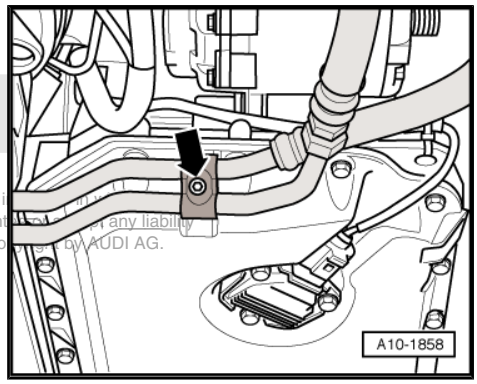

Protected by copyright. Copying for private or commercial purposes, in part or in whole, is not permitted unless authorised by AUDI AG. AUDI AG does not guarantee or assume any liability with respect to the correctness of information in this document. Copyright by AUDI AG.

– Detach hose -arrow- to secondary air pump at bottom of air cleaner housing.

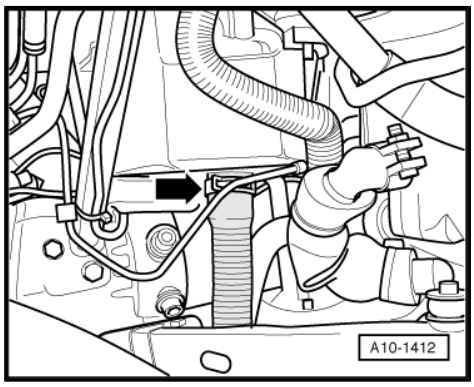

– Remove cover for suspension turret (right-side); to do so, detach spreader clips -1- and unscrew nut -2-.
– Pull cover out of retainers -arrows-.

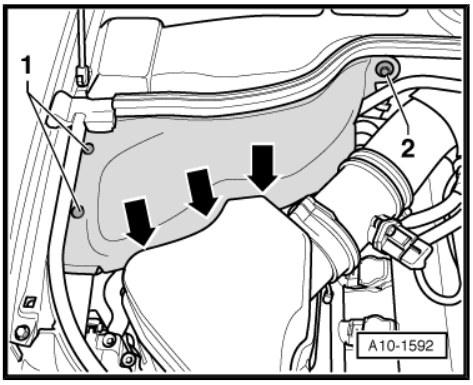

– Detach electrical connector -1-.
– Detach air intake hose -2- at air cleaner housing.
– Unscrew bolts -arrows- and remove air cleaner housing.

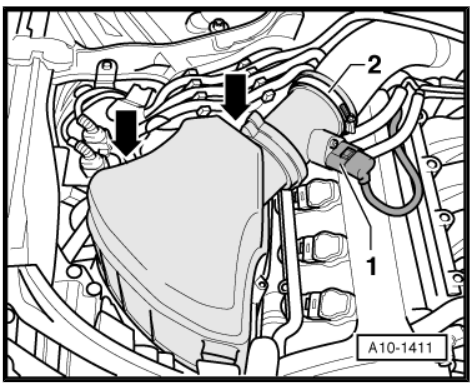

– Detach vacuum hose -arrow- going to brake servo at non-return valve.

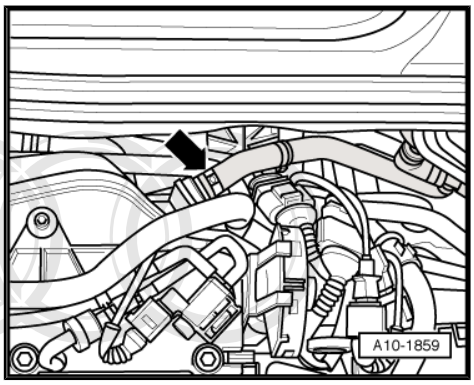

– Detach coolant hose -arrow- at expansion tank.

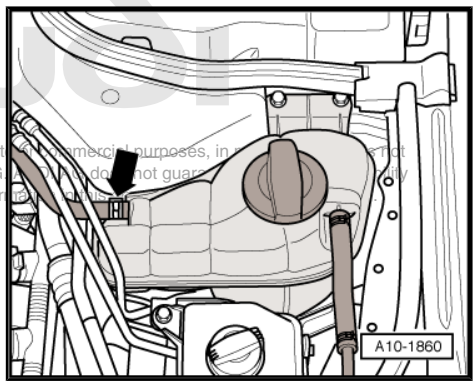

Protected by copyright. Copying for private or commercial purposes, in part or in whole, is not permitted unless authorised by AUDI AG. AUDI AG does not guarantee or assume any liability with respect to the correctness of information in this document.

– Detach coolant hose (front left) -arrow- at engine.

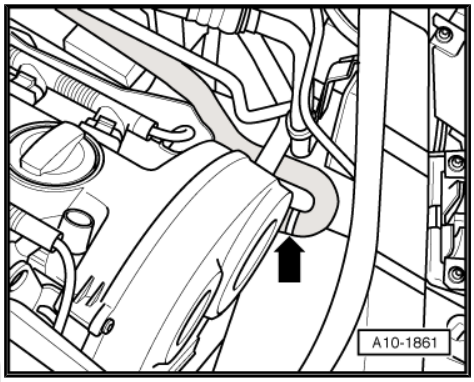

– Detach coolant hoses -1- and -2-.

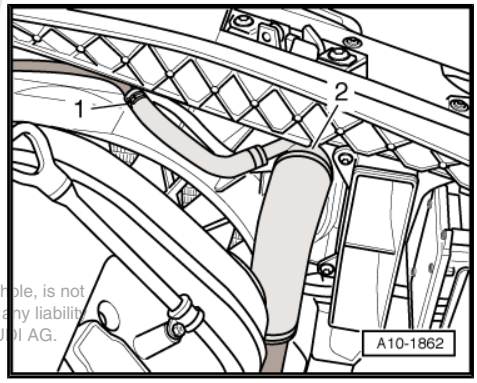

Protected by copyright. Copying for private or commercial purposes, in part or in whole, is not permitted unless authorised by AUDI AG. AUDI AG does not guarantee or accept any liability with respect to the correctness of information in this document. Copyright by AUDI AG.

– Detach coolant hose (front right) at engine -arrow-.
– Remove coolant hoses.

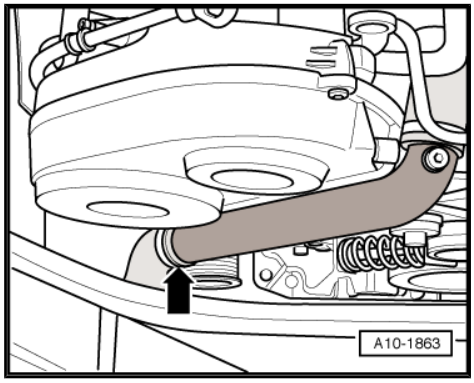

– Disconnect hose -arrow- at pipe for secondary air.

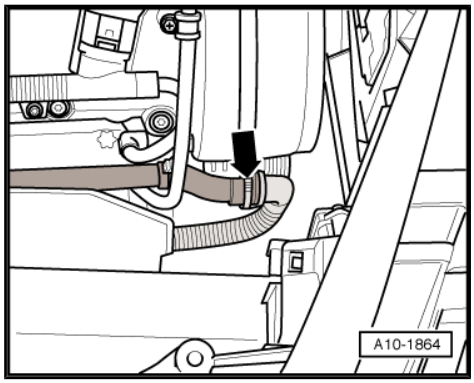

– Unscrew bolts for solenoid valve retaining plate -3- (-arrows-).
– Detach hose -4- for crankcase breather system at air duct -2-.

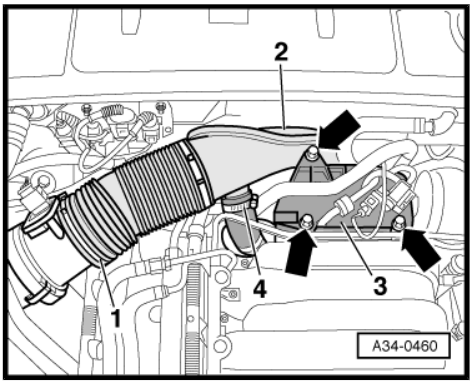

Note

Ignore item marked -1-.

– Unscrew bolt -arrow- and pull air duct -2- off throttle valve module -J338- .
– If fitted, pull hose -1- off at air duct.

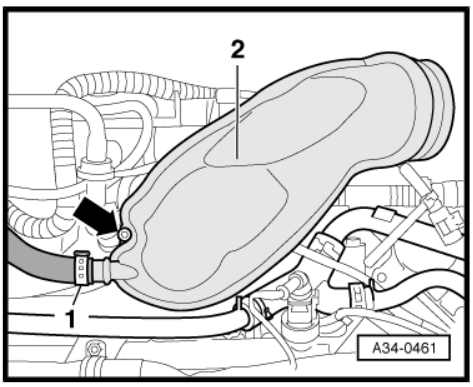

Note

For illustration purposes, the air duct is shown from rear and with engine removed.

– Detach electrical connectors -1- and -2- for Lambda probe after catalytic converter -G130- and Lambda probe II after catalytic converter -G131- from bracket and disconnect.

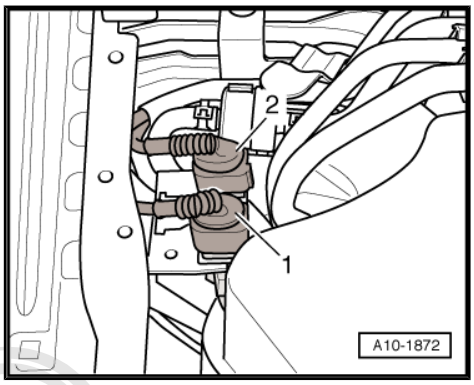

– Disconnect electrical connector -1- at solenoid valve 1 for activated charcoal filter system -N80- .
– Move wiring harness clear.
– Disconnect hose -2- at solenoid valve 1 for activated charcoal filter system -N80- and move clear.

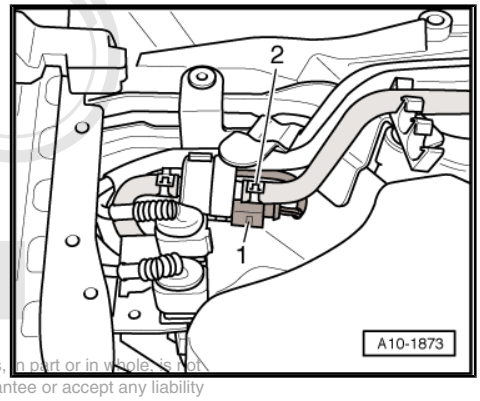

Protected by copyright. Copying for private or commercial purposes, in part or in whole, is not permitted unless authorised by AUDI AG. AUDI AG does not guarantee or accept any liability with respect to the correctness of information in this document. Copyright by AUDI AG.

– Unscrew bracket for connectors (rear centre) from bulkhead.
– Remove all electrical connectors from the bracket.
– Disconnect electrical connectors -2-, -3- and -4- and move connectors clear.

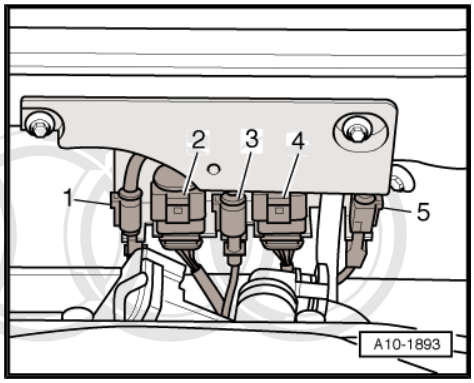

– Detach coolant hoses going to to heat exchanger at bulkhead -arrows-.

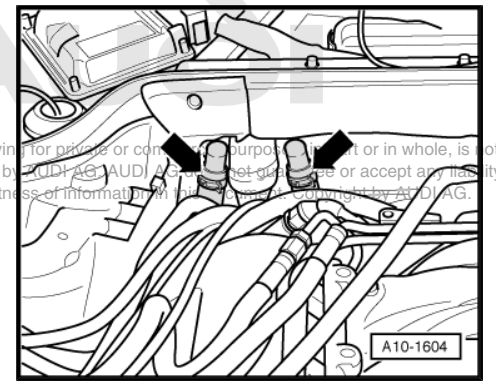

Protected by copyright. Copying for private or commercial purposes, in part or in whole, is not permitted unless authorised by AUDI AG. AUDI AG does not guarantee or accept any liability with respect to the correctness of information in this document. Copyright by AUDI AG.

– Detach coolant hose (rear left) -arrow- at engine.
– Remove coolant hose.

Note

Shown from rear with engine removed for illustration purposes.

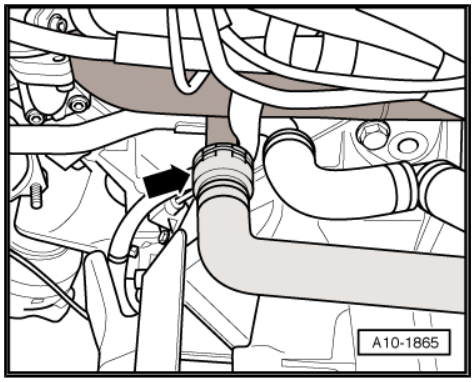

– Unscrew nut -2- (accessible from above) securing front exhaust pipe to exhaust manifold (left-side).

Note

Shown from rear with engine removed for illustration purposes.

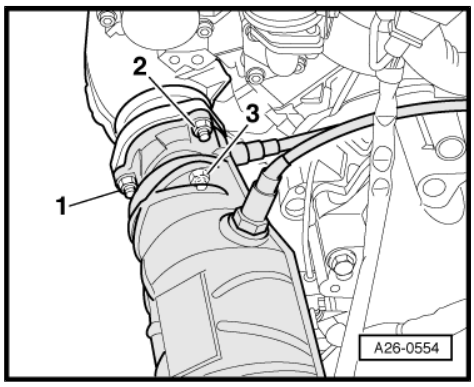

– Unscrew nut -2- (accessible from above) securing front exhaust pipe to exhaust manifold (right-side).

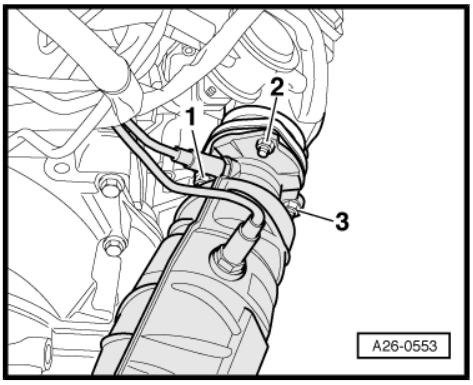

Note

Shown from rear with engine removed for illustration purposes.

Note

Lay a cloth under the hydraulic pressure pipe to catch any escaping hydraulic fluid.

– Unbolt hydraulic pressure line for power-assisted steering at rear coolant pipe -1- and disconnect line near cylinder head (right-side) -2-.

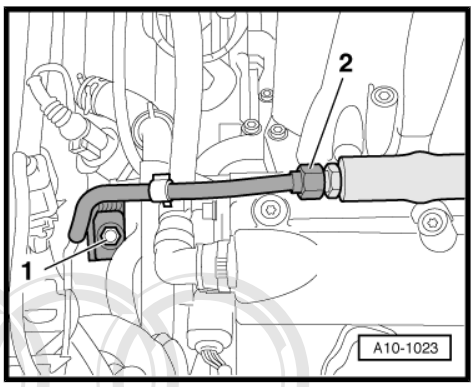

WARNING

Rules for cleanliness when working on the injection system *⇒ page 6* .

– Disconnect fuel return pipe -1- and fuel supply pipe -2- at fuel rail.

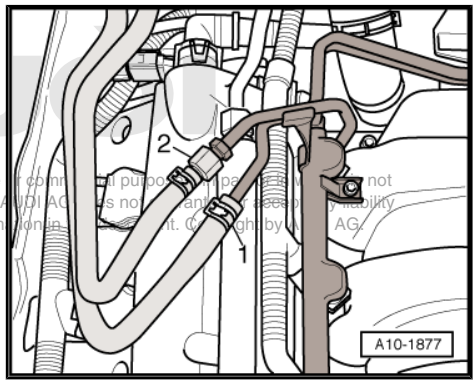

Protected by copyright. Copying for private or commercial purposes, in part or in whole, is not permitted unless authorised by AUDI AG. AUDI AG does not guarantee or assume any liability with respect to the correctness of information in this document. Copyright by AUDI AG.

– Pull off rubber seal -1- on plenum chamber covers.

– Remove plenum chamber covers -2- and -3-.

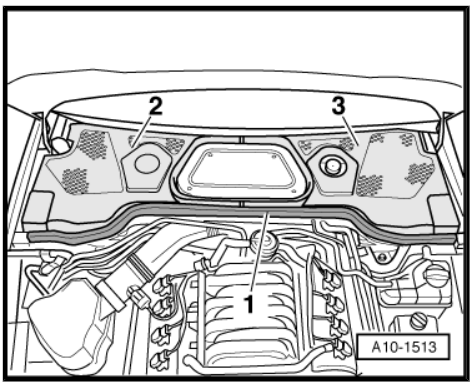

– Use screwdriver to pry off cover caps on wiper arms and unscrew hexagon nuts.
– Pull wiper arms off wiper shafts with puller -T10130- and remove.

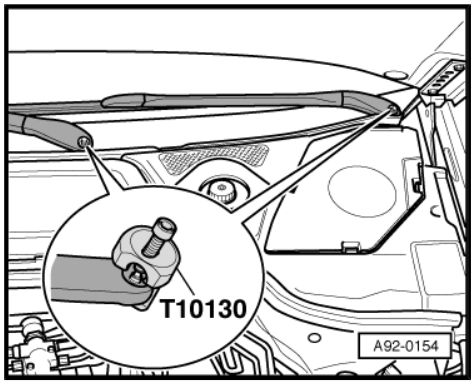

– Remove the dust/pollen filter; to do so, open the 4 quick release fasteners.

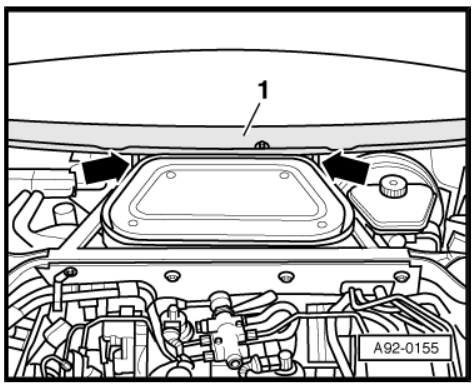

Note

Cover air duct at air conditioner housing with clean cloth to prevent anything falling in.

– Unscrew bolts on left and right -arrows- for cowl panel grille -1-.
– Carefully pull cowl panel grille off retainer at windscreen.

– Unscrew dome brace -arrow-.

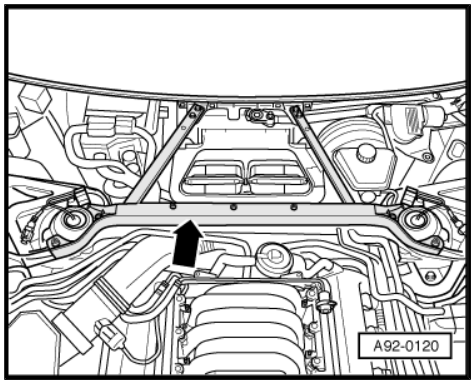

– Unscrew bolts -arrows-.
– Detach retainers and engine control unit from electronics box (plenum chamber).

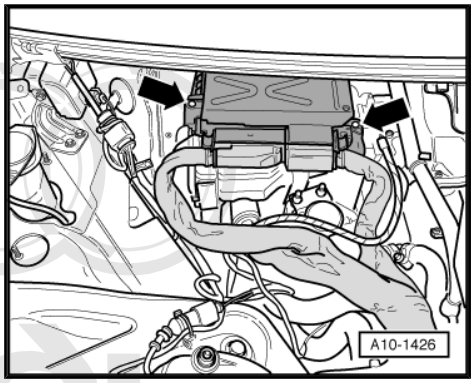

Note

The wires remain connected.

Protected by copyright. Copying for private or commercial purposes, in part or in whole, is not permitted unless authorised by AUDI AG. AUDI AG does not guarantee or accept any liability with respect to the correctness of information in this document. Copyright by AUDI AG.

– Turn air quality sensor -G238- approx. 90° anti-clockwise -arrow- and remove from retainer.
– Release the retaining clips -1 … 4-.
– Open electronics box (plenum chamber) cover slightly and pull off to front.

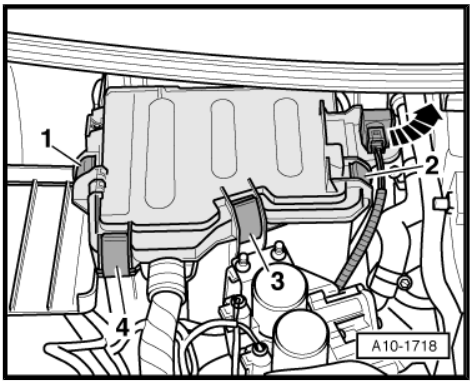

– Disconnect the electrical multi-pin connectors -arrows- using spark plug connector pliers -V.A.G 1922- .
– Detach the engine wiring harness at electronics box and at bulkhead.
– Place engine control unit with wiring harness attached on top of engine.

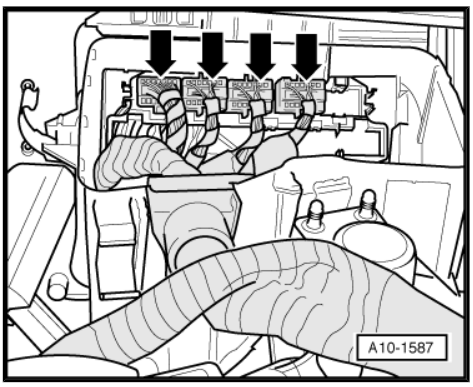

Note

Secure the engine control unit to prevent it falling.

– Remove trim (left-side) for A pillar ⇒ General body repairs, interior; Rep. Gr. 70 .
– Fold back floor carpet.

– Fold cover -2- to side.
– Unscrew nut -4-.
– Detach terminal 30 wire to starter.

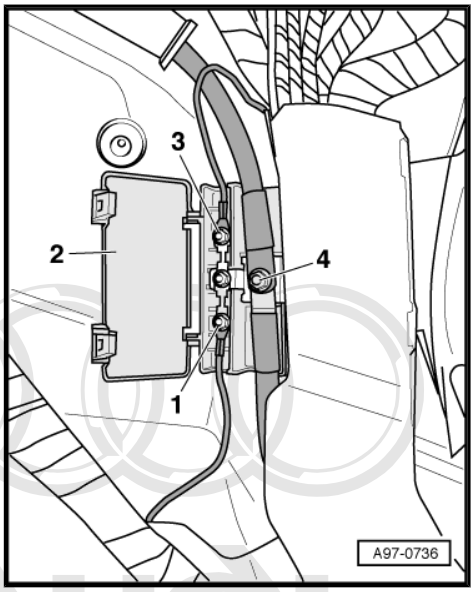

Note

Ignore items marked -1- and -3-.

Protected by copyright. Copying for private or commercial purposes, in part or in whole, is not permitted unless authorised by AUDI AG. AUDI AG does not guarantee or accept any liability with respect to the correctness of information in this document. Copyright by AUDI AG.

– Unscrew wiring clamp -1- in wheel housing (front right).
– Pull wiring harness out from interior -arrow-.

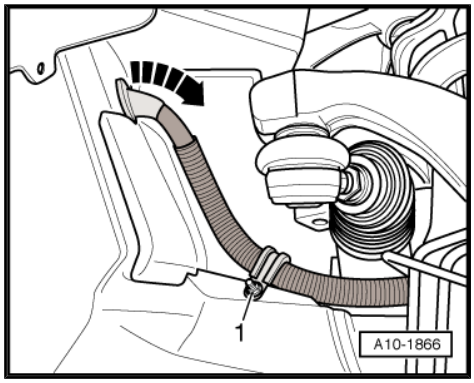

– Unplug electrical connectors -1- and -3-.
– Unbolt earth cable -2- at longitudinal member.
– Unscrew bracket for wiring harness at longitudinal member -arrows- and move wiring harness clear.

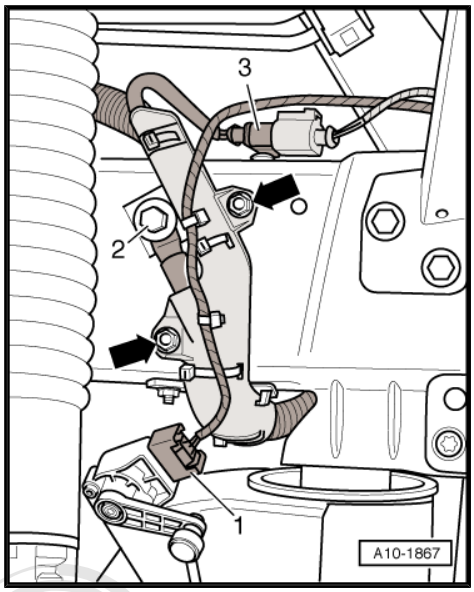

– Unscrew heat shields for drive shafts (left and right-side) from gearbox -1-.

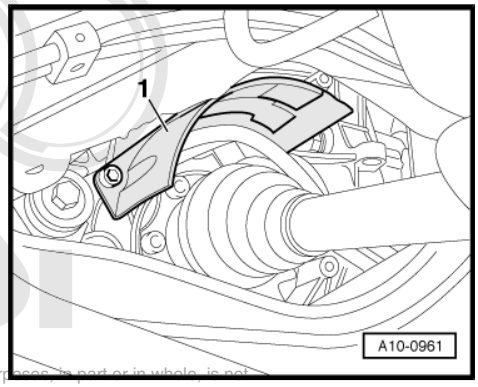

Protected by copyright. Copying for private or commercial purposes, in part or in whole, is not permitted unless authorised by AUDI AG. AUDI AG does not guarantee or accept any liability with respect to the correctness of information in this document.

– Remove bolt -1- on bracket (left-side) for exhaust system.

Note

Ignore item marked -2-.

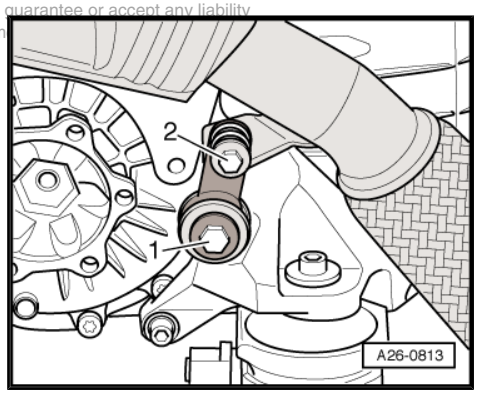

– Remove bolt -1- on bracket (right-side) for exhaust system.

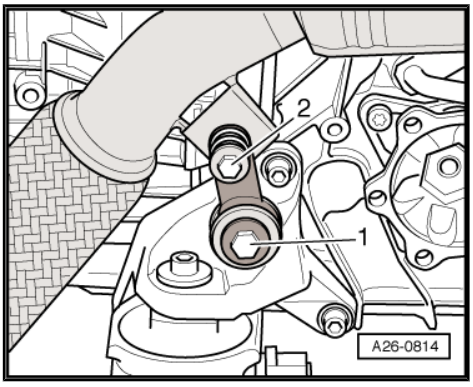

Note

Ignore item marked -2-.

– Loosen clamps -1- and -2-.

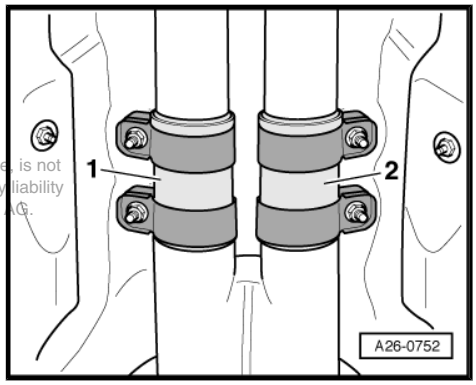

Protected by copyright. Copying for private or commercial purposes, in part or in whole, is not permitted unless authorised by AUDI AG. AUDI AG does not guarantee or accept any liability with respect to the correctness of information in this document. Copyright by AUDI AG.

– Unscrew nuts -arrows- on brackets for front exhaust pipes (left and right-side).

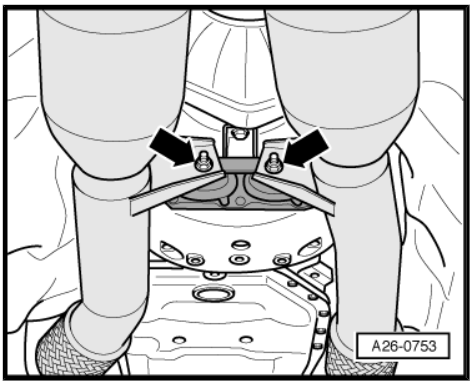

– Remove nuts -1- and -3- (accessible from below) securing front exhaust pipe to exhaust manifold (left-side).

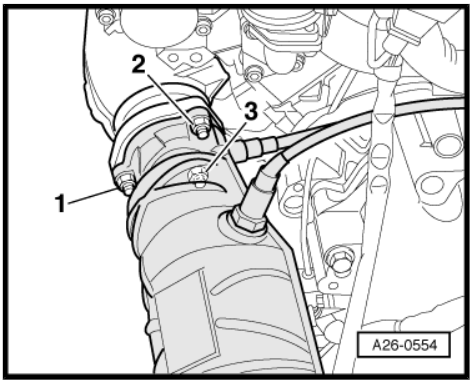

Note

Shown in illustration with engine removed.

– Detach front exhaust pipe from exhaust manifold (left-side).

Note

The front exhaust pipe remains in vehicle.

– Remove nuts -1- and -3- (accessible from below) securing front exhaust pipe to exhaust manifold (right-side).

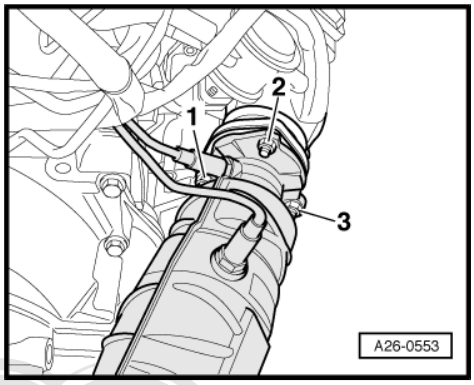

Note

Shown in illustration with engine removed.

– Detach front exhaust pipe from exhaust manifold (right-side).

– Release electrical connector -1- and detach from gearbox.

– Move wiring harness going to engine clear -arrows-.

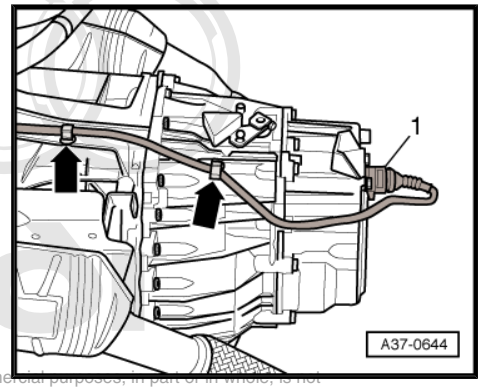

Note

Shown in illustration with gearbox removed.

Protected by copyright. Copying for private or commercial purposes, in part or in whole, is not permitted unless authorised by AUDI AG. AUDI AG does not guarantee or accept any liability with respect to the correctness of information in this document. Copyright by AUDI AG.

– Disconnect electrical connectors -arrow- on gearbox mountings (left and right-side) and move wires clear.

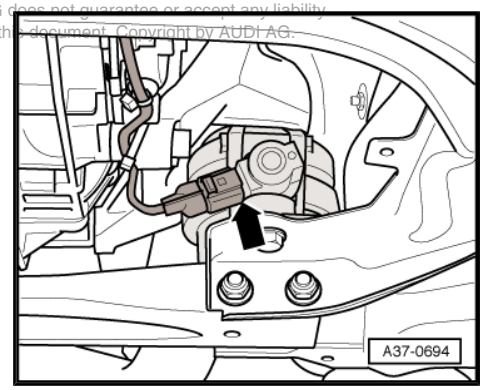

– Remove bolt -1- for heat shield (left-side) on gearbox.

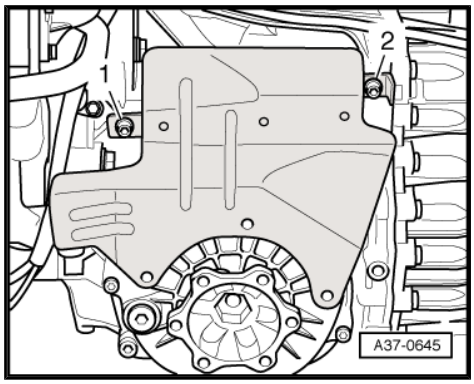

Note

Ignore item marked -2-.

– Unscrew the securing bolts for engine/gearbox assembly that are accessible from below.

– Remove bolts -arrows- for engine mounting (left and right-side)

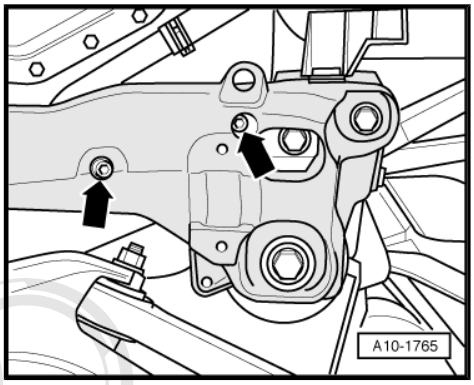

– Unscrew the securing bolts for engine/gearbox assembly that are accessible from above.

– Place the feet -10-222 A/1- of support bracket -10-222 A- on the suspension turrets as shown in the illustration.

• The spindle is located at front.

– Hang the adapter -10-222 A/20- (hooks) in the gearbox stiffener ridge next to the breather as shown in the illustration.

– Hang the spindle of support bracket -10-222 A- with extension -10-222 A/2- onto adapter -10-222 A/20- (hook).

– Take up weight of engine slightly with spindle.

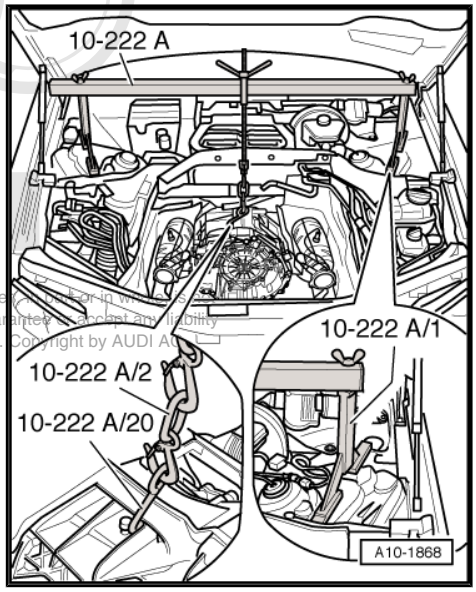

Protected by copyright. Copying for private or commercial purposes, in whole or in part, is not permitted unless authorised by AUDI AG. AUDI AG does not guarantee or accept any liability with respect to the correctness of information in this document. Copyright by AUDI AG.

Note

Shown in illustration with engine removed.

– Attach the lifting tackle -2024 A- to engine and workshop crane -VAS 6100- as shown in the illustration.

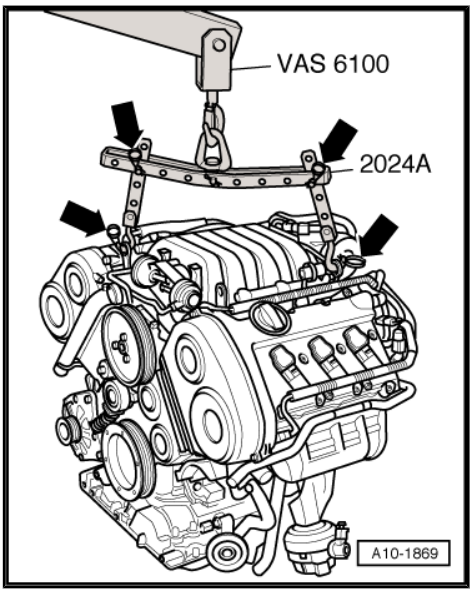

Note

♦ *To adjust to the centre of gravity for the assembly, the perforated rails of support hooks must be positioned as shown.*

♦ *Shown in illustration with engine removed.*

WARNING

The support hooks and retaining pins on the lifting tackle must be secured with locking pins -arrows-.

– Pull off bonnet seal at lock carrier.

– Unscrew toothed belt guard (front right) from cylinder head cover -arrows-.

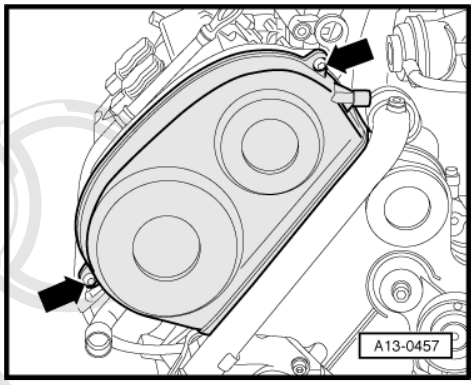

Note

Check that all hoses and wiring connections between engine, gearbox and body have been detached.

– Raise engine with workshop crane -VAS 6100- until the engine mountings are clear.
– Tighten spindel of support bracket -10-222 A- further.
– Detach engine from gearbox and lift engine upwards out of engine compartment.

1.3 Securing engine to engine stand

Protected by copyright. Copying for private or commercial purposes, in part or in whole, is not permitted unless authorised by AUDI AG. AUDI AG does not guarantee or accept any liability with respect to the correctness of information in this document. Copyright by AUDI AG.

Special tools and workshop equipment required

♦ Engine stand -VAS 6095-

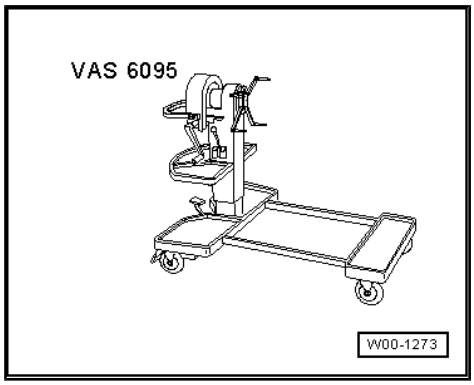

Procedure

– Secure the engine to engine stand -VAS 6095- as shown in the illustration.

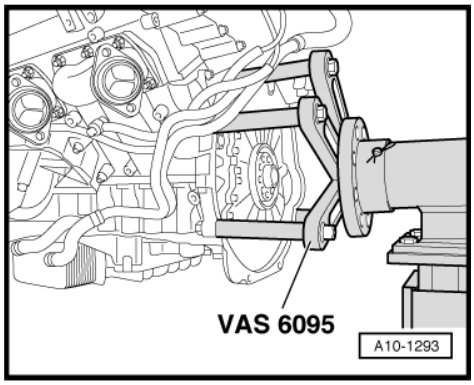

1.4 Installing

Installation is carried out in the reverse order; note the following:

Note

- *Renew self-locking nuts and bolts when performing assembly work.*
- *Renew bolts which are tightened to a specified angle as well as oil seals and gaskets.*
- *Renew bolts for securing engine/gearbox.*
- *Heat insulation sleeves removed when taking out the engine are to be reinstalled in the original position.*
- *Secure all hose connections with the correct type of hose clips (same as original equipment) ⇒ Parts catalogue.*
- *Fit all cable ties in the original position when installing.*
- *Clean input shaft splines and splines of damper unit on fly-wheel; remove corrosion and apply only a very thin coating of grease -G 000 100- to the splines. Remove any excess grease.*

– Check whether dowel sleeves for centring the engine/gearbox assembly are fitted in the cylinder block; install dowel sleeves if necessary.

– Before inserting the engine into the engine compartment, lay the wiring harness for main fuse carrier between ATF lines and subframe as shown in the illustration.

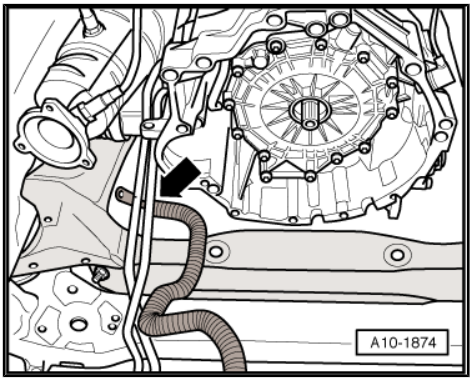

– Guide engine carefully into body.

– Place engine down onto engine mountings.

– Bolt gearbox to engine ⇒ page 31 .

– Install exhaust system and align free of stress ⇒ page 215 .

– Install air conditioner compressor ⇒ Air conditioning system; Rep. Gr. 87 .

– Secure ATF lines ⇒ multitronic 01J, front-wheel drive; Rep. Gr. 37 and ⇒ multitronic 01T, four-wheel drive; Rep. Gr. 37 .

Protected by copyright. Copying for private or commercial purposes, in part or in whole, is not permitted unless authorised by AUDI AG. AUDI AG does not guarantee or accept any liability with respect to the correctness of information in this document. Copyright by AUDI AG.

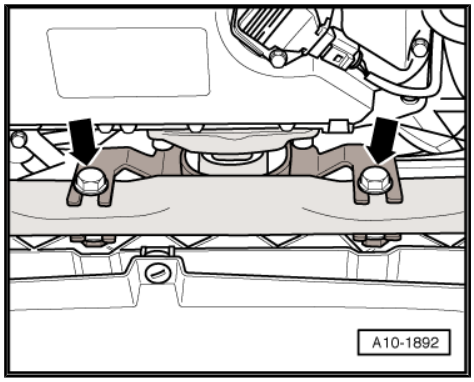

– Allow stop for torque reaction support to rest on rubber buffer for torque reaction support and tighten bolts -arrows- to 65 Nm.
– Install poly V-belt ⇒ page 33 .
– Install body brace ⇒ Brake system; Rep. Gr. 47 .
– Electrical connections and routing ⇒ Current flow diagrams, Electrical fault finding and Fitting locations.
– Observe notes on procedures required after connecting battery ⇒ Electrical system; Rep. Gr. 27 .

WARNING

Never use battery charging equipment for boost starting. There is danger of damaging the vehicle control units.

– Deactivate jacking mode ⇒ Running gear, front-wheel drive and four-wheel drive; Rep. Gr. 43 ; Operating the air suspension .
– Install and adjust wiper arms ⇒ Electrical system; Rep. Gr. 92 .
– Fill up with engine oil and check oil level ⇒ page 161 .
– Fill cooling system ⇒ page 165 .

Note

- *Drained-off coolant may only be used again if the original cylinder head or cylinder block are re-installed.*
- *Contaminated or dirty coolant must not be used again.*

– Top up power steering fluid and bleed steering system: ⇒ Running gear, front-wheel drive and four-wheel drive; Rep. Gr. 48

1.5 Tightening torques

Note

- *Tightening torques only apply to lightly greased, oiled, phosphated or blackened nuts and bolts.*
- *Additional lubricant such as engine oil or gearbox oil may be used, but do not use lubricant containing graphite.*
- *Do not use degreased parts.*
- *Tolerance for tightening torques ± 15%.*

This document is copyright protected. Any use for commercial purposes, in part or in whole, is not permitted unless authorised by AUDI AG. AUDI AG does not guarantee or accept any liability with respect to the correctness of information in this document. Copyright by AUDI AG.

Engine/gearbox attachment

Item	Bolt [2]	Nm
1, 10, 11	M10×45	45
2 [3]	M10×80	65
3	M12×100	65
4, 8	M12×67	65
5, 6	M12×75	65
7	M10×90	45
9	M10×57	45

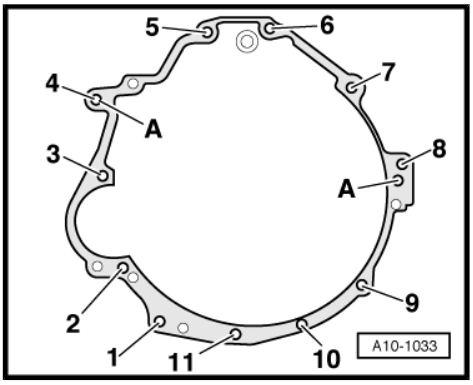

2) Renew bolts for securing engine/gearbox.

3) Bolt strength 10.9

A - Dowel sleeves for centring

Component		Nm
Bolts/nuts	M6	10
	M8	20
	M10	45
	M12	65
Except for the following:		
Toothed belt guard to cylinder head cover		6 [4]
Engine mounting to engine support		23
Bracket for wiring harness to longitudinal member		10
Battery cable to fuse box		20
Fuel supply line to fuel rail		23
Pressure line for	Pressure hose	40
power-assisted steering to	Coolant pipe	20
Air duct to intake manifold		10
Oil cooler to sump (top section)		30
Oil filter to oil cooler		20
Torque reaction support to top section of sump		40
Cross piece to lock carrier		42
Stop for torque reaction support to cross piece		65

4) Renew (self-locking)

Protected by copyright. Copying for private or commercial purposes, in part or in whole, is not permitted unless authorised by AUDI AG. AUDI AG does not guarantee or accept any liability with respect to the correctness of information in this document. Copyright by AUDI AG.

13 – Crankshaft group

1 Dismantling and assembling engine

1.1 Poly V-belt drive - exploded view

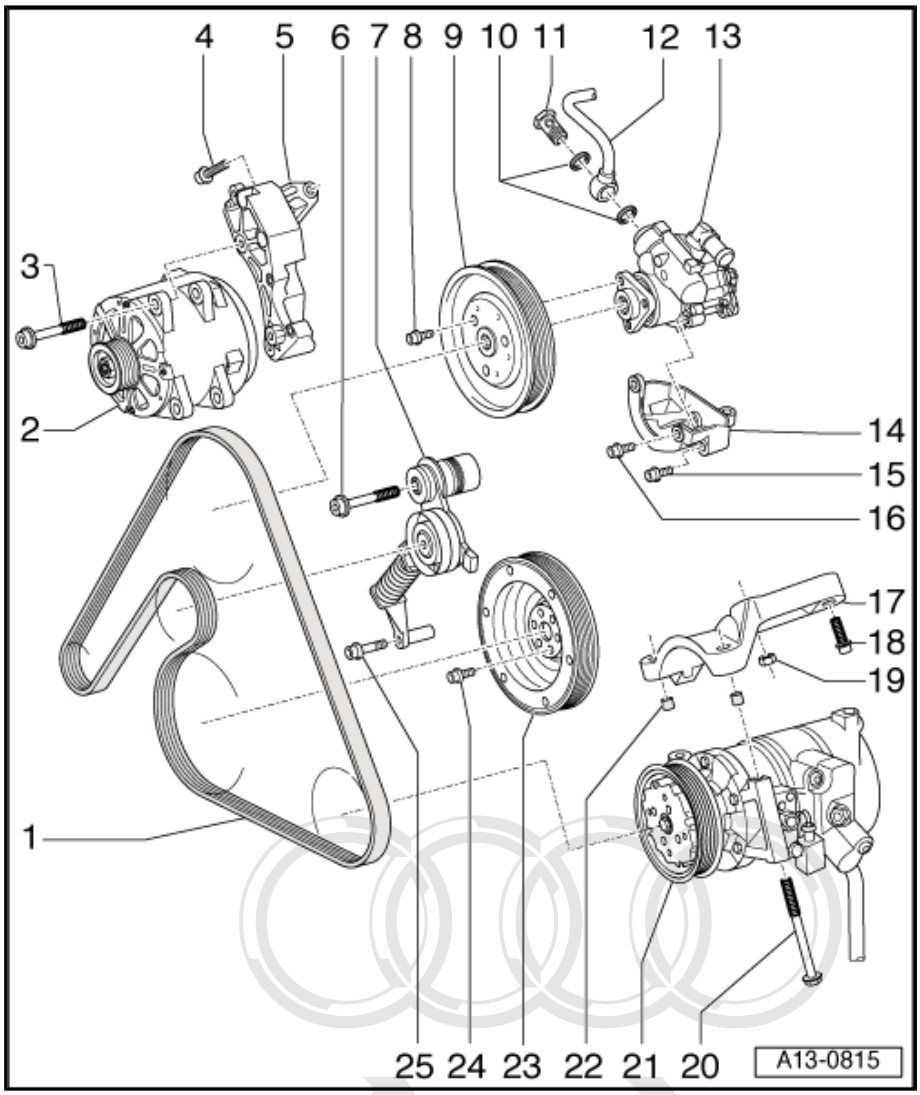

1 - Poly V-belt

- ❑ Before removing, mark direction of rotation with chalk or felt-tipped pen. If the belt runs in the opposite direction when it is refitted, this can cause breakage.
- ❑ Removing and installing ⇒ page 33
- ❑ Check for wear

2 - Alternator

- ❑ Removing and installing ⇒ Electrical system; Rep. Gr. 27

3 - 23 Nm

4 - 23 Nm

5 - Bracket for alternator

6 - 40 Nm

7 - Tensioner for poly V-belt

- ❑ Removing and installing ⇒ page 35

8 - 23 Nm

9 - Pulley for vane pump

- ❑ To remove and install: counterhold with 2-hole pin wrench -3212-
- ❑ Marked “Vorne/Front”

10 - O-rings

- ❑ Renew

11 - Banjo bolt -47 Nm-

12 - Pressure line

- ❑ To power-assisted steering

13 - Vane pump for power-assisted steering

- ❑ Removing and installing ⇒ Running gear, front-wheel drive and four-wheel drive; Rep. Gr. 48

Protected by copyright. Copying for private or commercial purposes, in part or in whole, is not permitted unless authorised by AUDI AG. AUDI AG does not make any warranty or accept any liability with respect to the correctness of information in this document. Copyright by AUDI AG.

14 - Bracket for vane pump

15 - 23 Nm

16 - 23 Nm

17 - Bracket for air conditioner compressor

18 - 23 Nm

19 - 23 Nm

20 - 25 Nm

21 - Air conditioner compressor

- ❑ Do not unscrew or disconnect refrigerant hoses or pipes.
- ❑ After detaching compressor from mountings, secure it to body with wire or similar. Do not leave it suspended from refrigerant pipes.

22 - Bush for air conditioner compressor

- ❑ 2 x

23 - Vibration damper

- ❑ Depending on version, thrust washer is fitted between vibration damper and toothed belt sprocket ⇒ page 36
- ❑ Removing and installing ⇒ page 36

24 - 23 Nm

25 - 23 Nm

1.2 Removing and installing poly V-belt

Special tools and workshop equipment required

♦ Poly V-belt lever -3299- with bracket -3299/1-

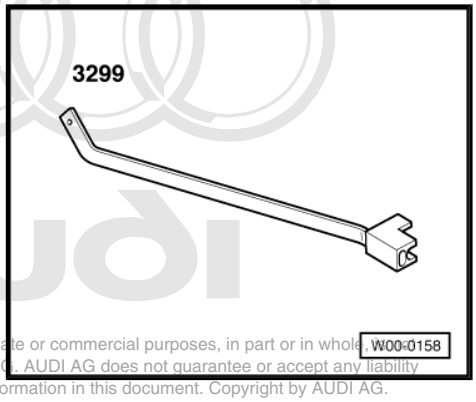

Protected by copyright. Copying for private or commercial purposes, in part or in whole, is not permitted unless authorised by AUDI AG. AUDI AG does not guarantee or accept any liability with respect to the correctness of information in this document. Copyright by AUDI AG.

Removing

– Pull off front engine cover -arrows-.

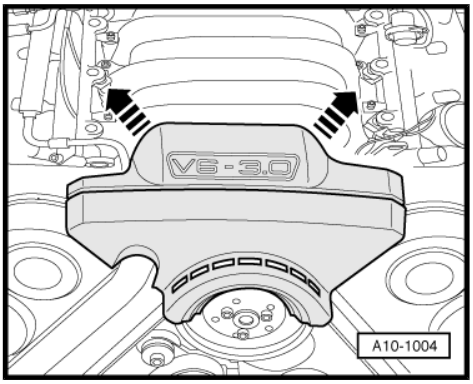

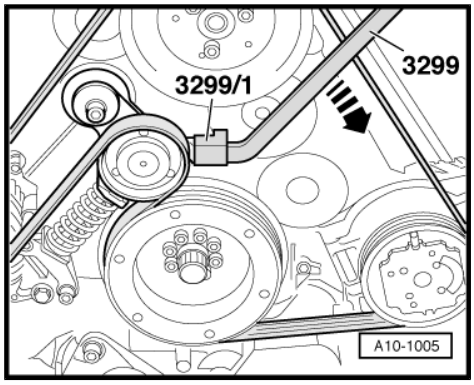

Note

Before removing, mark direction of rotation of poly V-belt with chalk or felt-tipped pen. If the belt runs in the opposite direction when it is refitted, this can cause breakage.

– To slacken the tensioner for poly V-belt, apply pressure to tensioner by moving poly V-belt lever -3299- and bracket -3299/1- in the direction of the -arrow-.

– Remove poly V-belt from pulley for vane pump.

Installing

Installation is carried out in the reverse order; note the following:

– First place poly V-belt over crankshaft pulley. Then push belt onto tensioning roller.

Routing of belt

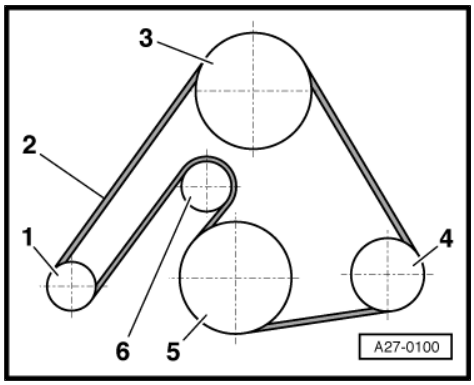

1 - Alternator

2 - Poly V-belt

3 - Vane pump for power-assisted steering

4 - Air conditioner compressor

5 - Crankshaft

6 - Tensioning roller

Note

When installing poly V-belt, make sure it is properly seated on pulleys.

– Start engine and check that belt runs properly.

Protected by copyright. Copying for private or commercial purposes, in part or in whole, is not permitted unless authorised by AUDI AG. AUDI AG does not guarantee or accept any liability with respect to the correctness of information in this document. Copyright by AUDI AG.

1.3 Removing and installing tensioner for poly V-belt

Special tools and workshop equipment required

- Poly V-belt lever -3299- with bracket -3299/1-
- 2-hole pin wrench -3212-
- Locking pin -T10115-

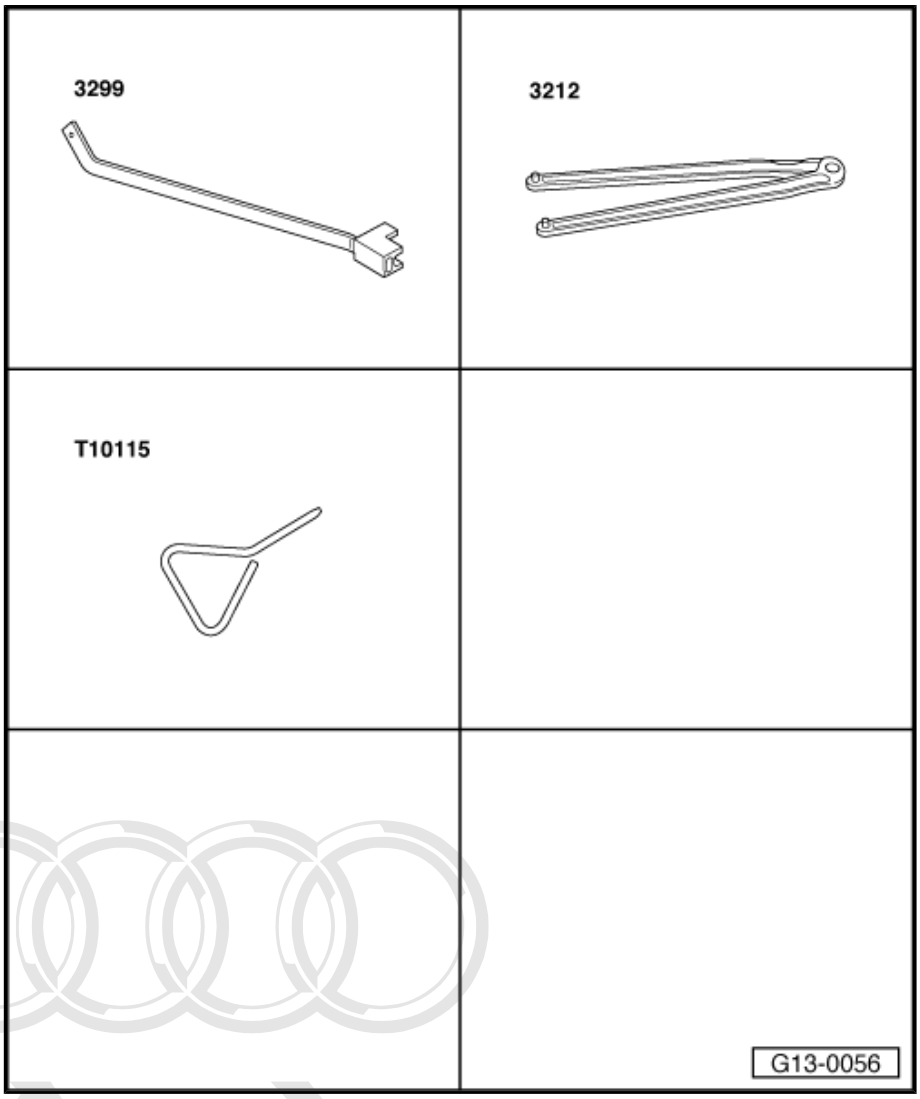

Removing

– Pull off front engine cover -arrows-.

Protected by copyright. Copying for private or commercial purposes, in part or in whole, is not permitted unless authorised by AUDI AG. AUDI AG does not guarantee or accept any liability with respect to the correctness of information in this document. Copyright by AUDI AG.

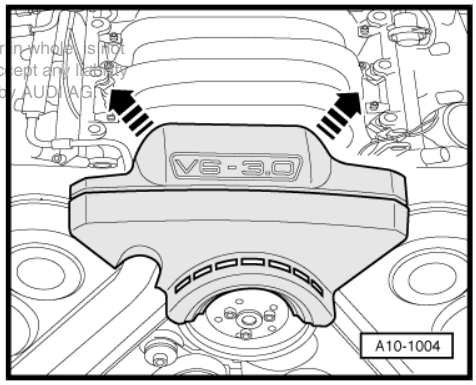

Note

Before removing, mark direction of rotation of poly V-belt with chalk or felt-tipped pen. If the belt runs in the opposite direction when it is refitted, this can cause breakage.

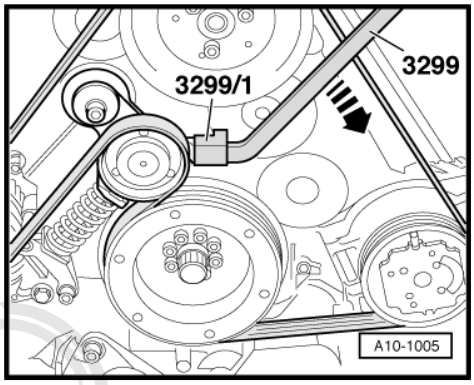

– To slacken the tensioner for poly V-belt, apply pressure to tensioner by moving poly V-belt lever -3299- and bracket -3299/1- in the direction of the -arrow-.

– Remove poly V-belt from pulley for vane pump.

– Unbolt poly V-belt pulley at vane pump -arrows-, using 2-hole pin wrench -3212- as a counterhold.

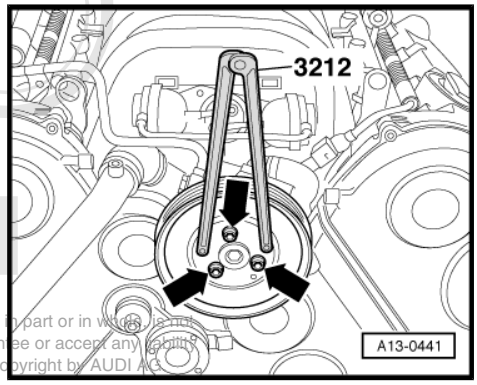

Protected by copyright. Copying for private or commercial purposes, in part or in whole is not permitted unless authorised by AUDI AG. AUDI AG does not guarantee or accept any liability with respect to the correctness of information in this document. Copyright by AUDI AG.

– To lock the tensioner for poly V-belt, apply pressure to tensioner by moving poly V-belt lever -3299- and bracket -3299/1- in the direction of the -arrow-, lock tensioner into place using locking pin -T10115- and release pressure.

– Unscrew bolts -1- and -2- and remove tensioner for poly V-belt (tensioner remains locked).

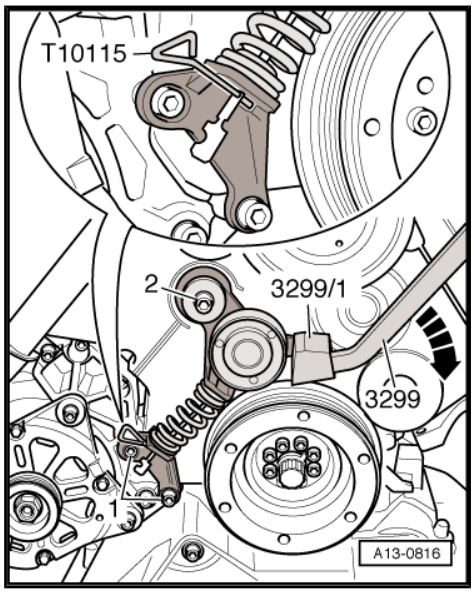

Installing

Installation is carried out in the reverse order; note the following:

– Install poly V-belt ⇒ page 33 .

Tightening torque

Component	Nm
Tensioner for poly V-belt to bracket for alternator	23
Tensioner for poly V-belt to cylinder block	40

1.4 Removing and installing vibration damper

Special tools and workshop equipment required

♦ 2-hole pin wrench -3212-

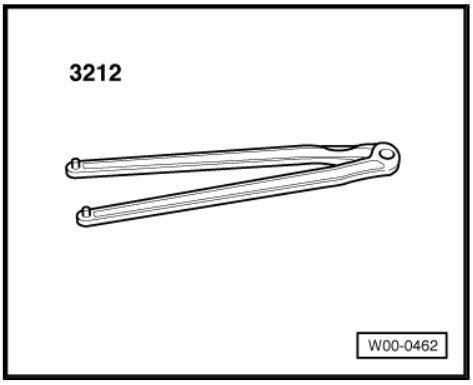

♦ Poly V-belt lever -3299- with bracket -3299/1-

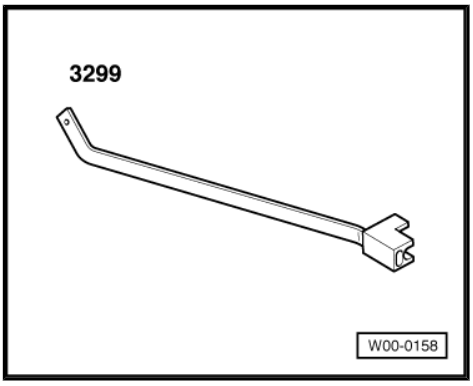

Removing

– Pull off front engine cover -arrows-.

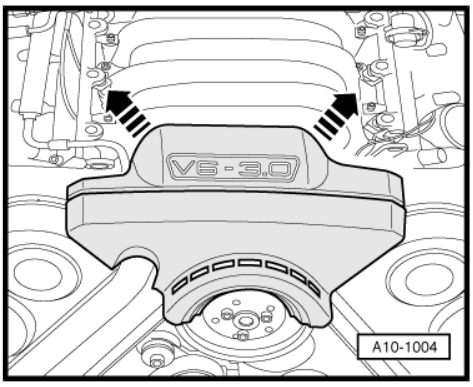

Protected by copyright. Copying for private or commercial purposes, in part or in whole, is not permitted unless authorised by AUDI AG. AUDI AG does not guarantee or accept any liability with respect to the correctness of information in this document. Copyright by AUDI AG.

Note

Before removing, mark direction of rotation of poly V-belt with chalk or felt-tipped pen. If the belt runs in the opposite direction when it is refitted, this can cause breakage.

– To slacken the tensioner for poly V-belt, apply pressure to tensioner by moving poly V-belt lever -3299- and bracket -3299/1- in the direction of the -arrow-.

– Remove poly V-belt from pulley for vane pump.

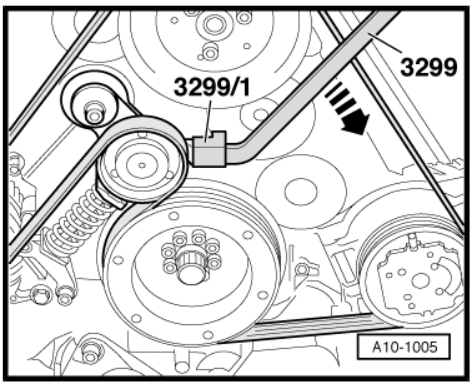

– Unbolt poly V-belt pulley at vane pump -arrows-, using 2-hole pin wrench -3212- as a counterhold.

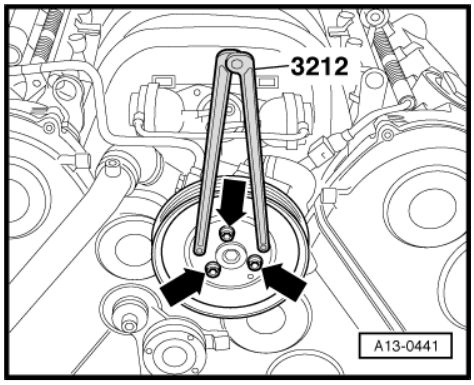

– Unscrew the 8 bolts -1-.
– Remove vibration damper -2- and thrust washer -3-.

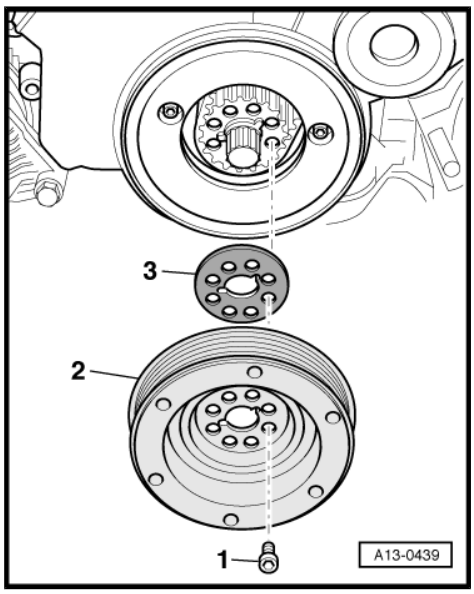

Note

The thrust washer -3- is only fitted in conjunction with toothed belt sprocket -06C 105 063 A- . If toothed belt sprocket -06C 105 063 B- is fitted, do NOT install thrust washer.

Installing

Installation is carried out in the reverse order; note the following:

– Install the thrust washer so that the curved rim faces towards the vibration damper.

– When installing vibration damper, ensure that notches -arrows- in vibration damper are aligned with locating lugs on toothed belt sprocket.

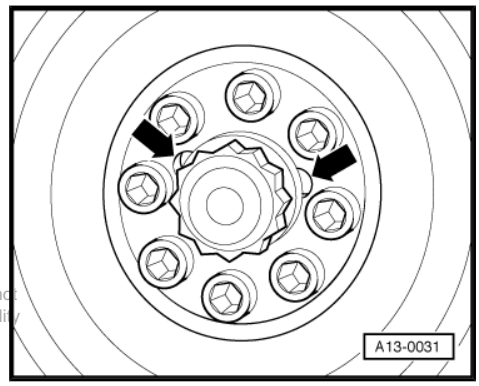

– Install poly V-belt ⇒ page 33 .

Tightening torque

Component	Nm
Vibration damper to crankshaft	23
Pulley for vane pump to vane pump	23

Protected by copyright. Copying for private or commercial purposes, in part or in whole, is not permitted unless authorised by AUDI AG. AUDI AG does not guarantee or accept any liability with respect to the correctness of information in this document. Copyright by AUDI AG.

2 Removing and installing sealing flanges and dual-mass flywheel/fly-wheel/drive plate

2.1 Sealing flanges and dual-mass flywheel/flywheel/drive plate - exploded view

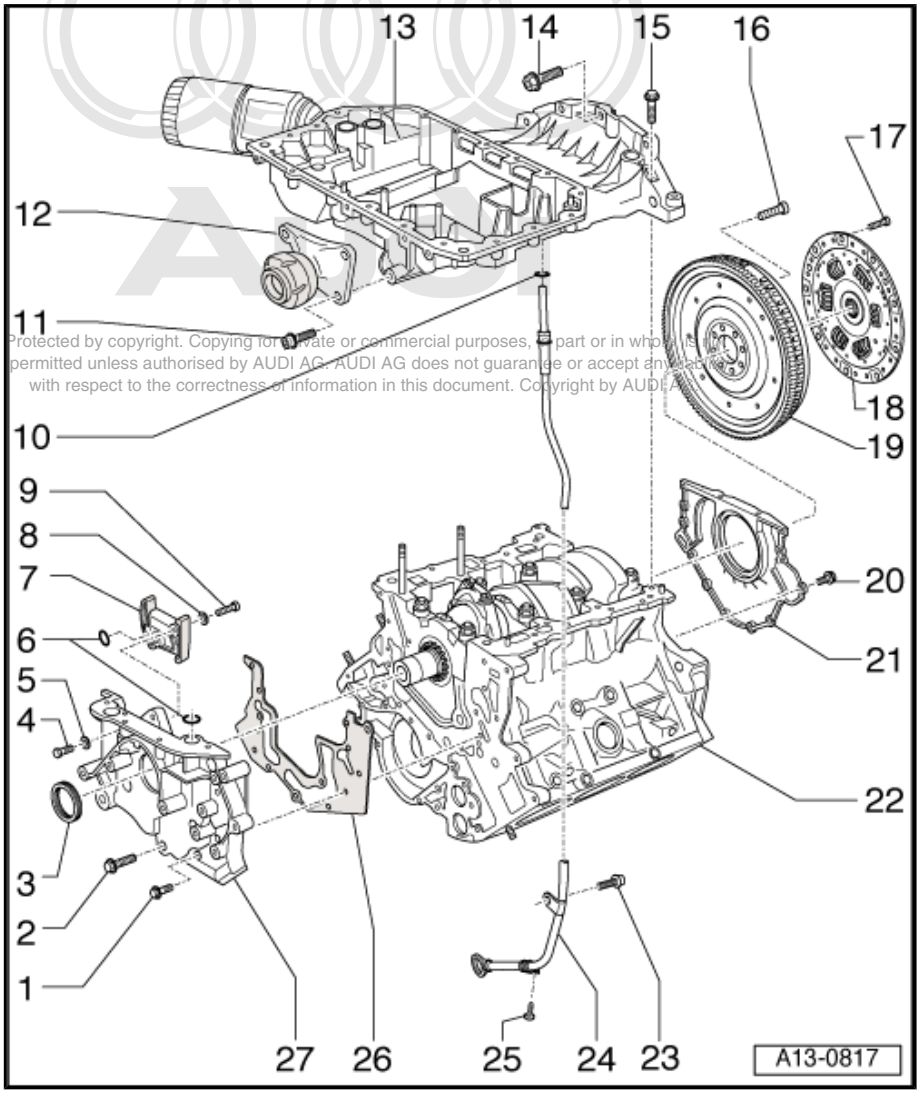

Protected by copyright. Copying for private or commercial purposes, in part or in whole, is not permitted unless authorised by AUDI AG. AUDI AG does not guarantee or accept any liability with respect to the correctness of information in this document. Copyright by AUDI AG.

1 - 10 Nm

2 - 30 Nm
- ❑ Self-locking
- ❑ Renew

3 - Oil seal for crankshaft
- ❑ Removing and installing ⇒ page 40

4 - Screw plug -10 Nm-

5 - Seal
- ❑ Renew

6 - O-ring
- ❑ Renew

7 - Chain tensioner
- ❑ Removing and installing ⇒ page 156

8 - Washer

9 - 12 Nm

10 - O-ring
- ❑ Renew

11 - 40 Nm

12 - Torque reaction support

13 - Sump (top section)
- ❑ Removing and installing ⇒ page 145

14 - 45 Nm

15 - M7 = 16 Nm M8 = 22 Nm

16 - Special bolt
- ❑ Renew
- ❑ Tightening torque ⇒ page 48

17 - Bolt
- ❑ Loosening and tightening ⇒ multitronic 01J, front-wheel drive; Rep. Gr. 13 and ⇒ multitronic 01T, four-wheel drive; Rep. Gr. 13

18 - Damper unit for multitronic gearbox
- ❑ Removing and installing ⇒ multitronic 01J, front-wheel drive; Rep. Gr. 13 and ⇒ multitronic 01T, four-wheel drive; Rep. Gr. 13

19 - Flywheel
- ❑ Removing and installing ⇒ page 47

20 - 10 Nm

21 - Sealing flange (rear) with oil seal

- ❑ Removing and installing ⇒ page 45
- ❑ Lubricate sealing lip of oil seal lightly
- ❑ To install, push guide sleeve from assembly kit onto crankshaft.

22 - Cylinder block

- ❑ Removing and installing crankshaft ⇒ page 49
- ❑ Dismantling and assembling pistons and conrods ⇒ page 55

23 - 10 Nm

24 - Guide tube for oil dipstick

25 - Panel bolt

26 - Gasket

- ❑ Renew

27 - Sealing flange (front)

- ❑ Removing and installing ⇒ page 42

2.2 Renewing crankshaft oil seal (pulley end)

Special tools and workshop equipment required

- ♦ Fitting sleeve -3202/1-
- ♦ Oil seal extractor -3203-
- ♦ Fitting sleeve -3265-

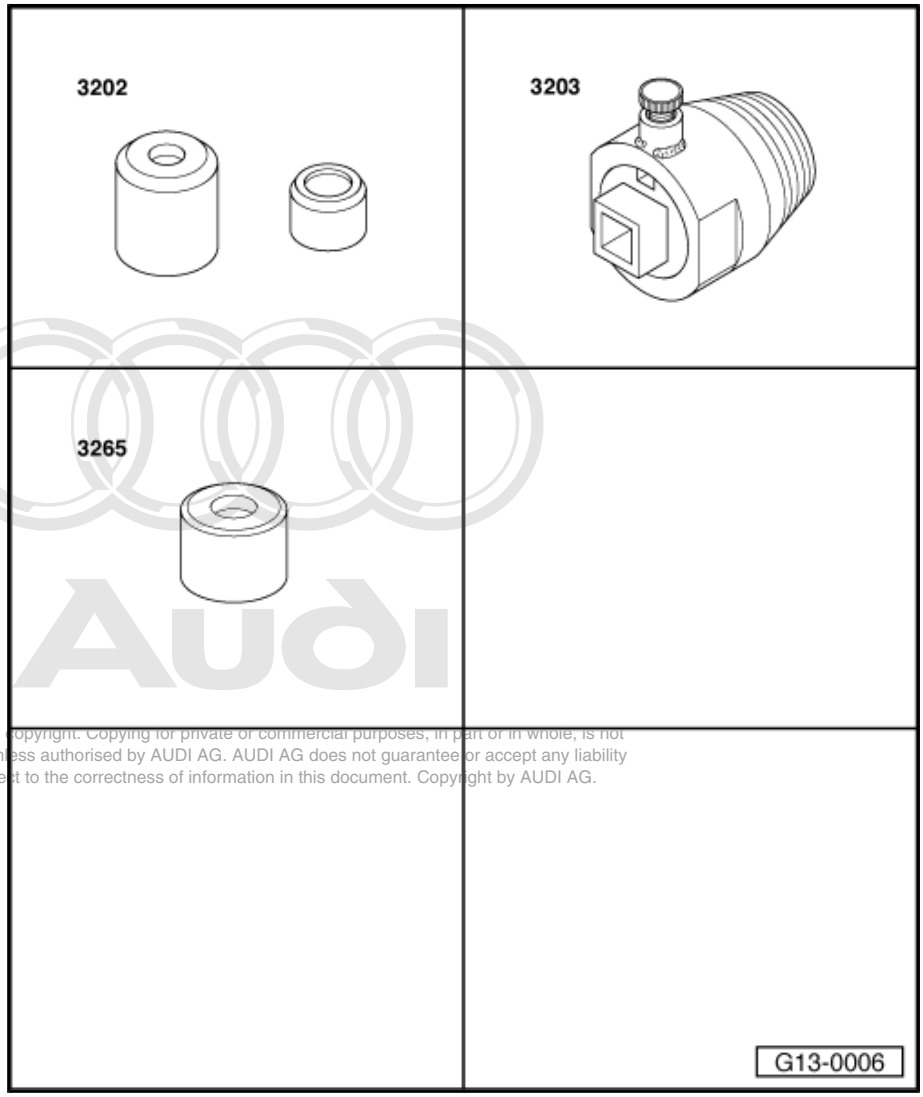

Protected by copyright. Copying for private or commercial purposes, in part or in whole, is not permitted unless authorised by AUDI AG. AUDI AG does not guarantee or accept any liability with respect to the correctness of information in this document. Copyright by AUDI AG.

Removing

– Remove toothed belt ⇒ page 62 .

– Unscrew central bolt -1- for crankshaft toothed belt sprocket -2- and remove sprocket.

– Remove diamond-coated washer -3- from toothed belt sprocket.

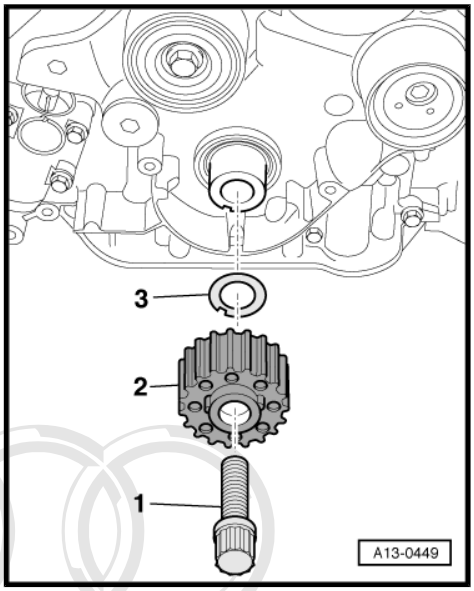

– Unscrew inner section of oil seal extractor -3203- 6 turns out of outer section and lock with knurled screw.

– Lubricate threaded head of oil seal extractor, place it in position and, exerting firm pressure, screw it into oil seal as far as possible.

– Loosen knurled screw and turn inner part against crankshaft until the oil seal is pulled out.

– Clamp flats of oil seal extractor in vice.

– Remove oil seal with pliers.

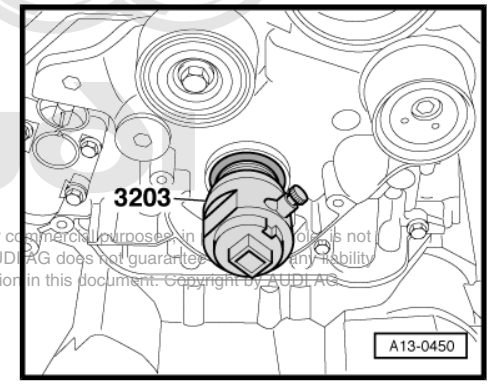

Protected by copyright. Copying for private or commercial purposes, in part or in whole, is not permitted unless authorised by AUDI AG. AUDI AG does not guarantee or assume any liability with respect to the correctness of information in this document. Copyright by AUDI AG.

Installing

Note

Do not lubricate sealing lip and outer rim of oil seal before pressing in.

– Clean running surface and sealing surface.

– Push on oil seal using fitting sleeve -3202/1- .

– Press oil seal on as far as the stop using fitting sleeve -3265- and central bolt.

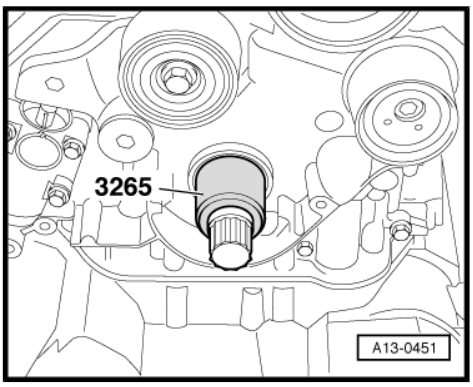

– Install crankshaft toothed belt sprocket -2- with new diamond-coated washer -3- and new central bolt -1-.

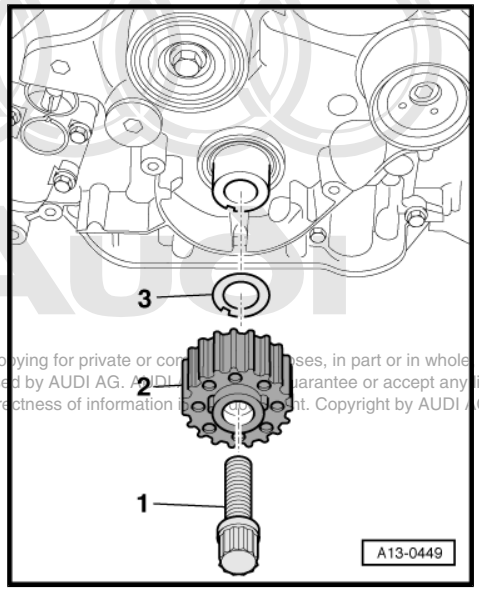

Note

- *The contact surfaces between toothed belt sprocket, diamond-coated washer and crankshaft must be free of oil.*
- *Do not use additional oil on bolt for crankshaft toothed belt sprocket.*

– Install toothed belt (adjust valve timing) ⇒ page 69

Protected by copyright. Copying for private or commercial purposes, in part or in whole, is not permitted unless authorised by AUDI AG. AUDI AG does not guarantee or accept any liability with respect to the correctness of information in this document. Copyright by AUDI AG.

Tightening torques

Component	Nm
Toothed belt sprocket to crankshaft	200 + 180° [5] [6]

5) Renew bolt.

6) 180° equals half of a turn.

2.3 Removing and installing sealing flange (front)

Special tools and workshop equipment required

- Fitting sleeve -3202/1-

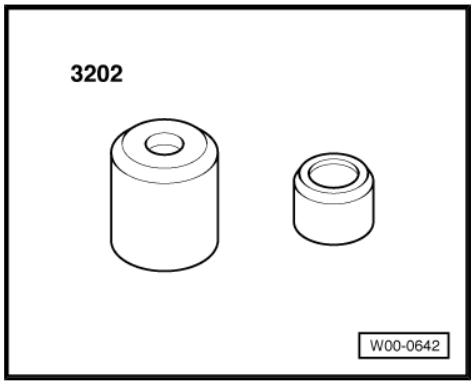

- Fitting sleeve -3265-

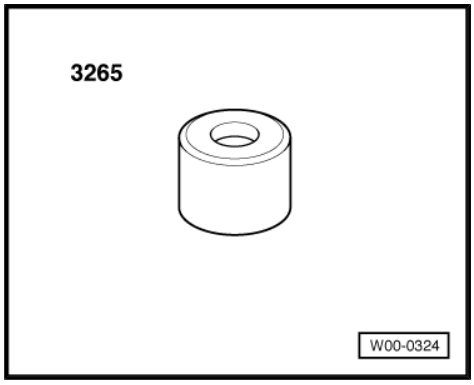

Removing

- Remove toothed belt ⇒ page 62 .
- Remove camshaft sprockets (right-side).
- Remove bolts -1- and take off bracket with idler roller.
- Remove bolts -2- and take off toothed belt guard (rear right).
- Remove top section of sump ⇒ page 145 .

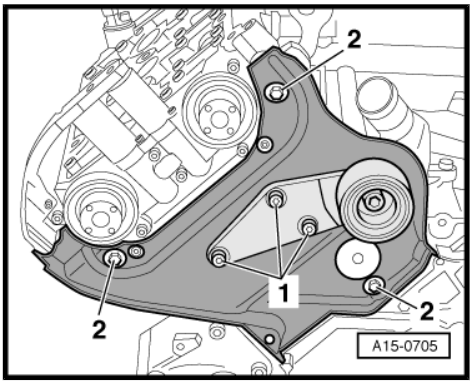

- Unscrew central bolt -1- for toothed belt sprocket -2- on crankshaft.
- Remove toothed belt sprocket and diamond-coated washer -3-.

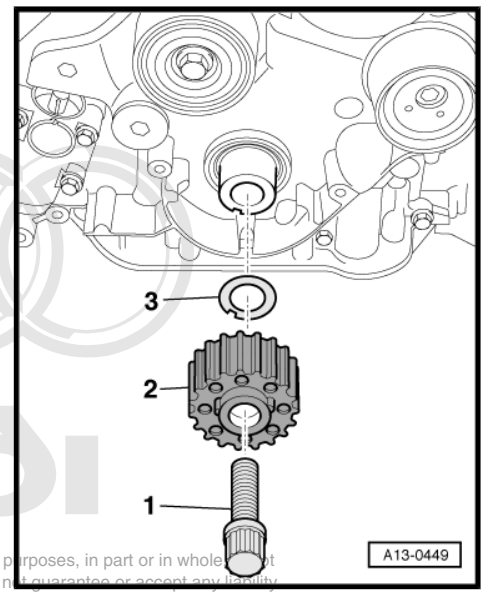

Protected by copyright. Copying for private or commercial purposes, in part or in whole, is not permitted unless authorised by AUDI AG. AUDI AG does not guarantee or accept any liability with respect to the correctness of information in this document. Copyright by AUDI AG.

- Unbolt eccentric adjuster -3-, tensioning lever -2- with tensioning roller and tensioning element -1-.

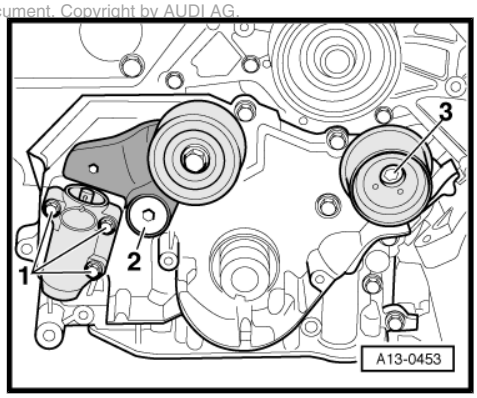

- Unscrew plug from access hole -3-.
- Press chain tensioner -1- in direction of -arrow- until a 3 mm ∅ drill bit -2- can be inserted in the access holes in the sealing flange and the chain tensioner.

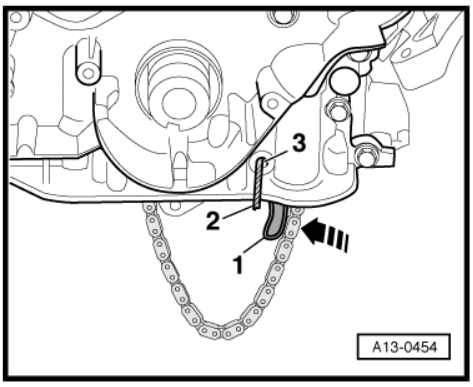

– Unscrew bolts -1- and -2-.
– Pull off sealing flange (front).
– Drive out oil seal with flange removed.

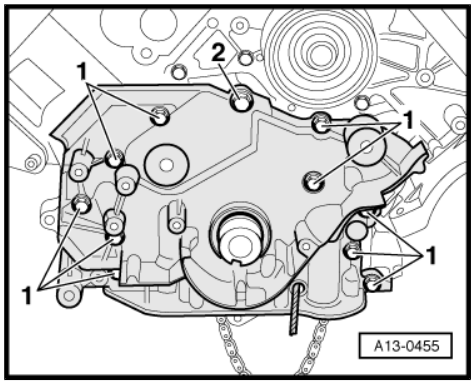

Note

The chain tensioner must be removed if the sealing flange is renewed *⇒ page 156* *.*

Installing

Installation is carried out in the reverse order; note the following:

Note

- *Renew gaskets, seals and self-locking bolts.*
- *Do not lubricate sealing lip and outer rim of oil seal before pressing in.*

– Clean sealing surfaces before installing sealing flange.
– Install sealing flange (front) with chain tensioner locked in position.

– Renew bolt -2-.

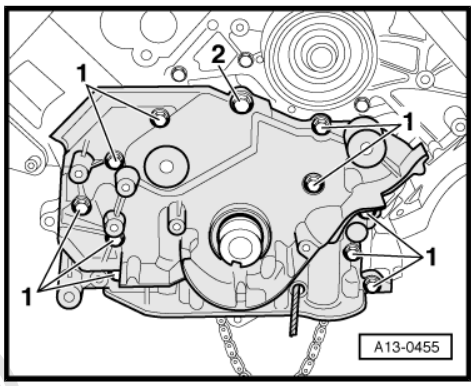

– Tighten bolts -1- to 10 Nm and bolt -2- to 30 Nm.
– Push on oil seal using fitting sleeve -3202/1- .
– Press oil seal on as far as the stop using fitting sleeve -3265- and central bolt.

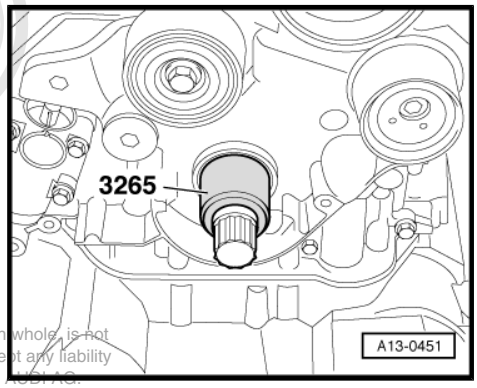

Protected by copyright. Copying for private or commercial purposes, in part or in whole, is not permitted unless authorised by AUDI AG. AUDI AG does not guarantee or accept any liability with respect to the correctness of information in this document. Copyright by AUDI AG.

– Install eccentric adjuster -3-, but do not tighten yet.

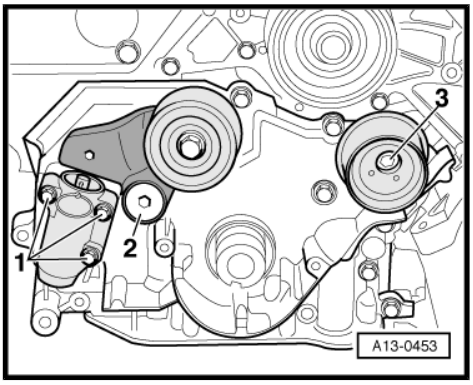

Note

Note washer fitted under tensioning lever -2-.

– Install tensioning lever -2- with tensioning roller and tensioning element -1-.

– Install crankshaft toothed belt sprocket -2- with new diamond-coated washer -3- and new central bolt -1-.

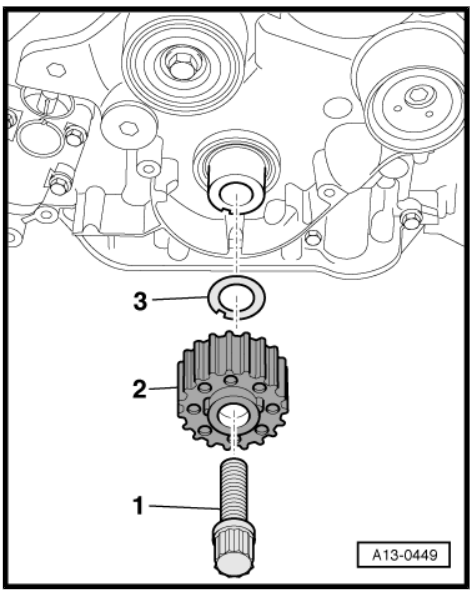

Note

- *The contact surfaces between toothed belt sprocket, diamond-coated washer and crankshaft must be free of oil.*
- *Do not use additional oil on bolt for crankshaft toothed belt sprocket.*

– Install sump (top section) ⇒ page 145 .

– After installing oil pump, pull drill bit out of access hole and screw in sealing plug with a new seal.

– Install toothed belt (adjust valve timing) ⇒ page 69 .

Tightening torques

Component		Nm
Sealing flange (front) to	M 6	10
cylinder block	M 8	30 [7]
Tensioning lever to sealing flange (front)		45 [7]
Tensioning element to sealing flange (front)		10
Toothed belt sprocket to crankshaft		200 + 180° [7] [8]
Sealing plug for access hole to sealing flange (front)		10

7) Renew bolts.

8) 180° equals half of a turn.

2.4 Removing and installing sealing flange (rear)

Protected by copyright. Copying for private or commercial purposes, in part or in whole, is not permitted unless authorised by AUDI AG. AUDI AG does not guarantee or accept any liability with respect to the correctness of information in this document. Copyright by AUDI AG.

Special tools and workshop equipment required

- Electric drill with plastic brush attachment
- Safety goggles
- Silicone sealant ⇒ Parts catalogue
- Assembly sleeve -T20097-

Removing

- Engine or gearbox removed.

– Remove damper unit ⇒ multitronic 01J, front-wheel drive; Rep. Gr. 13 and ⇒ multitronic 01T, four-wheel drive; Rep. Gr. 13 .

– Remove flywheel ⇒ page 47 .

– Unscrew bolts -1 … 5- and remove sealing flange.

Protected by copyright. Copying for private or commercial purposes, in part or in whole, is not permitted unless authorised by AUDI AG. AUDI AG does not guarantee or accept any liability with respect to the correctness of information in this document. Copyright by AUDI AG.

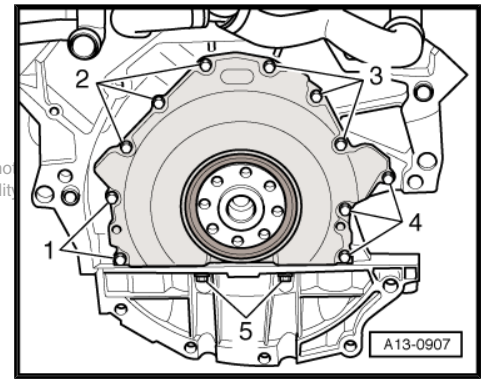

Installing

Installation is carried out in the reverse order; note the following:

– Remove remaining sealant on rear sealing flange and cylinder block using rotating plastic brush or similar.

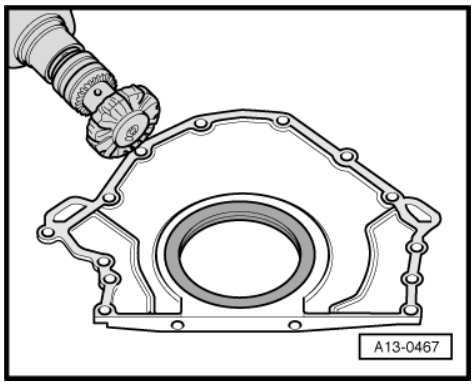

> ⚠ **WARNING**
>
> *Wear safety goggles.*

– Clean sealing surfaces; they must be free of oil and grease.

– Cut off nozzle of tube at front marking (∅ of nozzle approx. 1 mm).

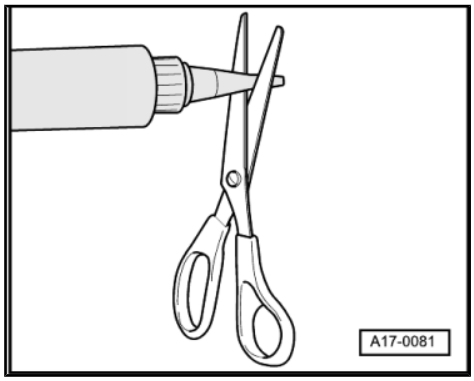

– Apply a bead of silicone sealant onto the clean sealing surfaces of the sealing flange as illustrated.

• The bead of sealant should be approx. 1.5 mm wide -arrow-.

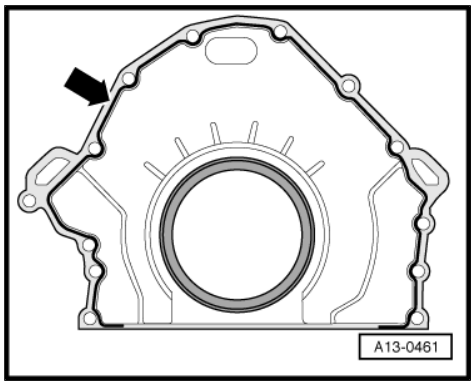

Note

♦ *The sealant bead must not be thicker than specified, otherwise excess sealant could enter the sump and clog the strainer in the oil pump.*

♦ *The sealing flange must be installed within 5 minutes after applying silicone sealant.*

– Coat the lower sealing surface on the sealing flange lightly with silicone sealant -hatched area-.

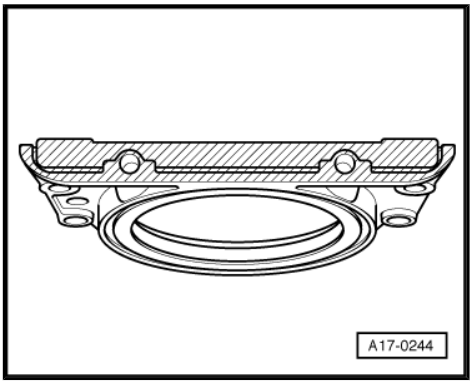

– Apply a thin bead of silicone sealant at the edge of the joints between the cylinder block and top section of sump -arrows-.

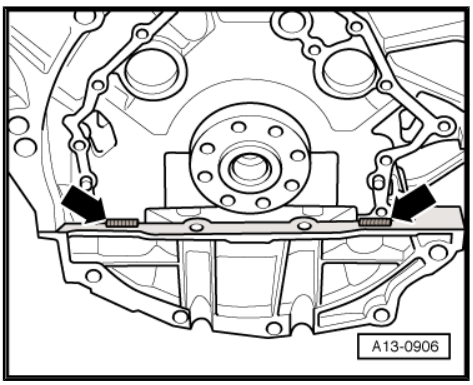

– Fit assembly sleeve -T20097- onto crankshaft journal.
– Push the sealing flange carefully onto the dowel sleeves on the cylinder block.
– Tighten bolts -1 … 4- to 10 Nm and bolts -5- to 14 Nm.
– Install flywheel ⇒ page 47 .
– Install damper unit ⇒ multitronic 01J, front-wheel drive; Rep. Gr. 13 and ⇒ multitronic 01T, four-wheel drive; Rep. Gr. 13 .

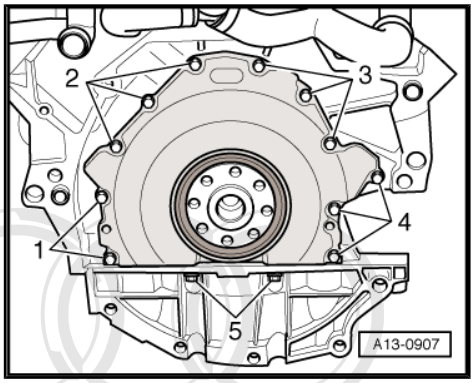

Tightening torque

Component	Nm
Sealing flange (rear) to cylinder block	10
Sealing flange (rear) to top section of sump	14

2.5 Removing and installing flywheel

Special tools and workshop equipment required

♦ Counterhold -10-201-

Protected by copyright. Copying for private or commercial purposes, in part or in whole, is not permitted unless authorised by AUDI AG. AUDI AG does not guarantee or accept any liability with respect to the correctness of information in this document. Copyright by AUDI AG.

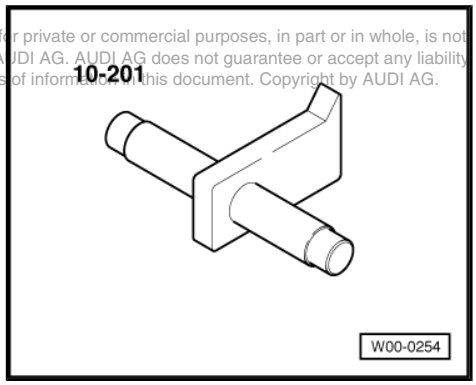

Removing

- Engine or gearbox removed.

– Remove damper unit -arrow- ⇒ multitronic 01J, front-wheel drive; Rep. Gr. 13 and ⇒ multitronic 01T, four-wheel drive; Rep. Gr. 13 .

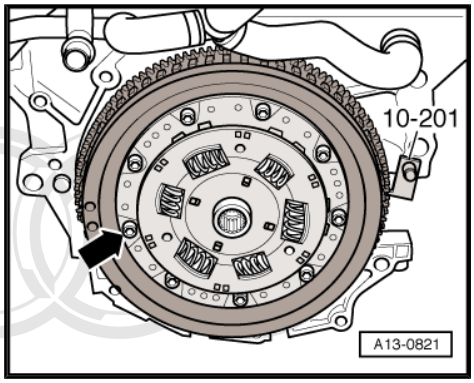

– Mark installation position of flywheel on engine -arrow-.

– Attach counterhold -10-201- in order to loosen bolts.

– Unscrew flywheel.

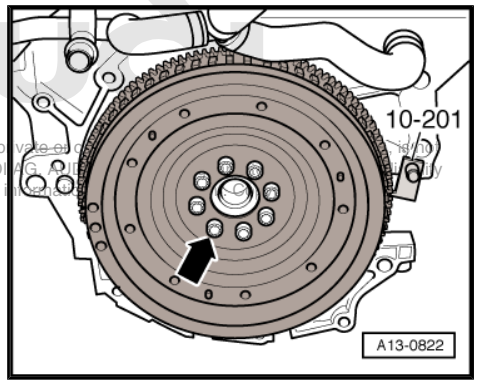

Protected by copyright. Copying for private or commercial purposes, in part, is not permitted unless authorised by AUDI AG. AUDI AG does not guarantee or assume any liability with respect to the correctness of information.

Installing

Installation is carried out in the reverse order; note the following:

– Use new bolts for securing.

– Attach counterhold -10-201- on other side in order to tighten bolts.

– Install damper unit ⇒ multitronic 01J, front-wheel drive; Rep. Gr. 13 and ⇒ multitronic 01T, four-wheel drive; Rep. Gr. 13 .

Tightening torques

Component		Nm
Flywheel to crankshaft	Bolt length 22.5 mm	60 + 90° 9) 10)

9) 90° equals a quarter of a turn.

10) Renew bolts.

3 Removing and installing crankshaft

Note

When carrying out repairs, secure engine to assembly stand with engine and gearbox support -VAS 6095- ⇒ page 28 .

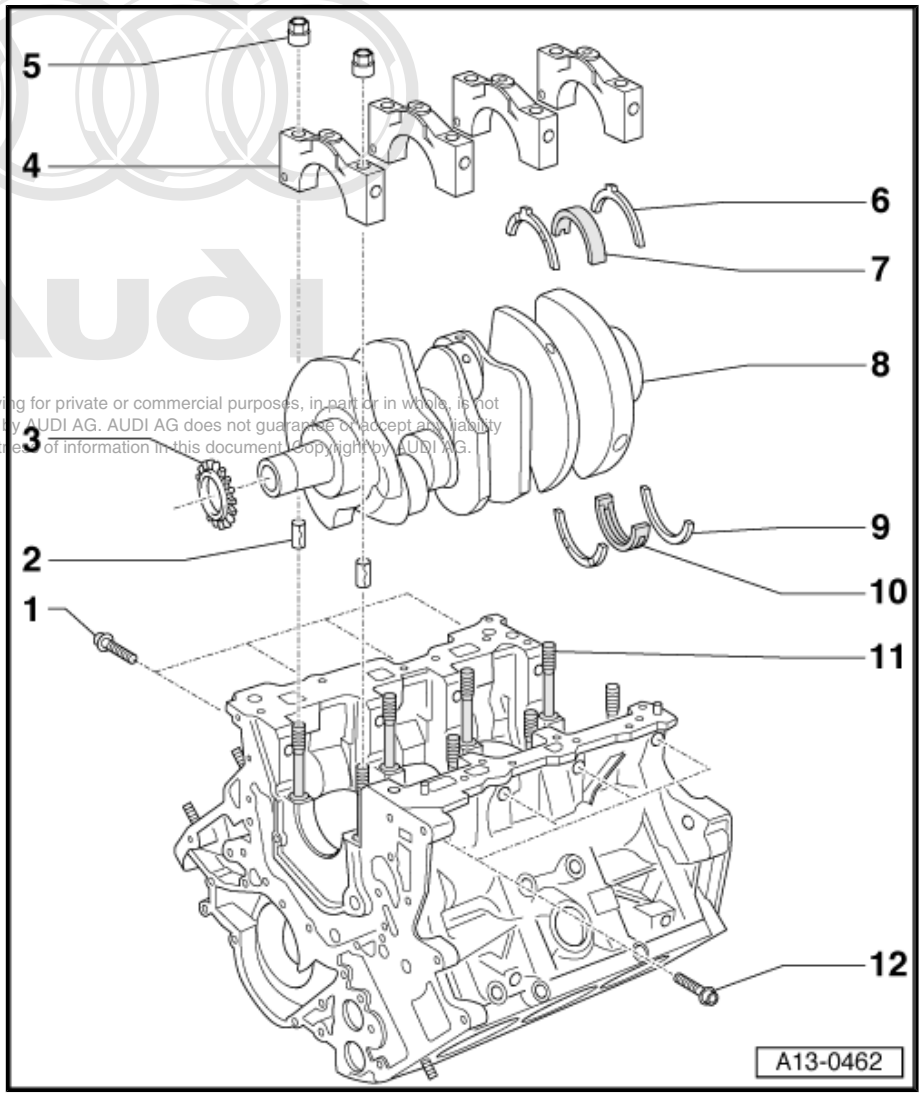

Protected by copyright. Copying for private or commercial purposes, in part or in whole, is not permitted unless authorised by AUDI AG. AUDI AG does not guarantee or accept any liability with respect to the correctness of information in this document. Copyright by AUDI AG.

1 - Bolt
- ❑ For bearing cap
- ❑ Renew
- ❑ Tightening sequence ⇒ page 51

2 - Dowel sleeve
- ❑ Insert in cylinder block

3 - Drive chain sprocket for oil pump
- ❑ Removing and installing ⇒ page 53

4 - Bearing cap
- ❑ Note marking ⇒ page 50
- ❑ Removing ⇒ page 50
- ❑ Installing ⇒ page 51

5 - Nut
- ❑ For bearing cap
- ❑ Renew
- ❑ Tightening sequence ⇒ page 51

6 - Thrust washer
- ❑ Only fitted on 4th crankshaft bearing
- ❑ Oil grooves face outwards
- ❑ Note location
- ❑ Measuring axial clearance of crankshaft ⇒ page 52

7 - Bearing shell
- ❑ For bearing cap without oil groove
- ❑ Do not interchange used bearing shells (mark)
- ❑ Install new bearing shells for the cylinder block with the correct coloured markings ⇒ page 51

8 - Crankshaft
- ❑ Measuring axial and radial clearance ⇒ page 52
- ❑ Do not rotate the crankshaft when checking the radial clearance
- ❑ Crankshaft dimensions ⇒ page 52

9 - Thrust washer
- ❑ Only fitted on 4th crankshaft bearing
- ❑ Oil grooves face outwards
- ❑ Measuring axial clearance of crankshaft ⇒ page 52

10 - Bearing shell

- ❑ For cylinder block with oil groove
- ❑ Do not interchange used bearing shells (mark)
- ❑ Install new bearing shells for the cylinder block with the correct coloured markings ⇒ page 51

11 - Stud

12 - Bolt

- ❑ For bearing cap
- ❑ Renew
- ❑ Tightening sequence ⇒ page 51

Markings on crankshaft bearing caps

- Bearing 1 is on pulley end.

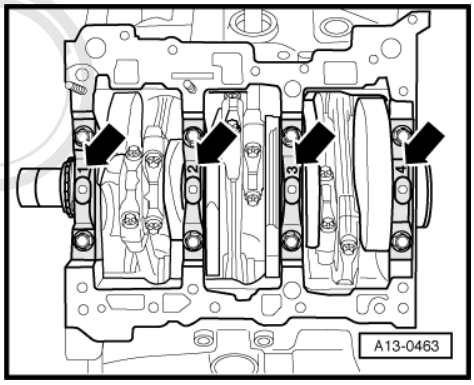

Protected by copyright. Copying for private or commercial purposes, in part or in whole, is not
authorised by AUDI AG. AUDI AG does not guarantee or accept any liability
with respect to the correctness of information in this document. Copyright by AUDI AG

Removing crankshaft bearing caps

– Remove bolts and nuts for crankshaft bearing caps.

– Pull crankshaft bearing caps off cylinder block using puller - T10055- .

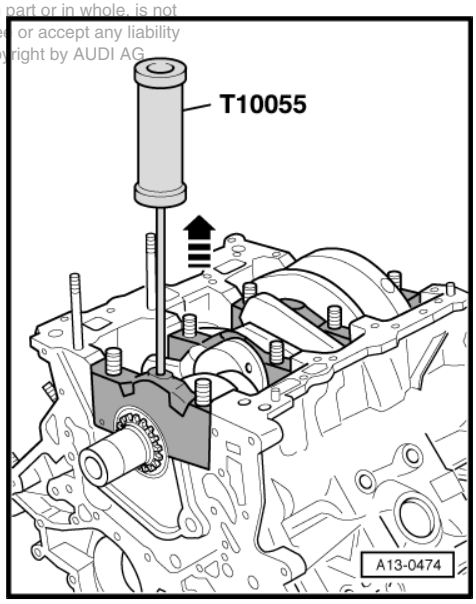

Allocation of crankshaft bearing shells for cylinder block

Bearing shells of the correct thickness are allocated to the cylinder block at the factory. Coloured dots on bearing shell are used to identify bearing shell thickness.

- The -arrow- points to pulley end.

The allocation of the bearing shells to the cylinder block is identified by a code letter next to the relevant bearing.

Letter on cylinder block		Colour of bearing
G	=	Yellow
B	=	Blue
S	=	Black

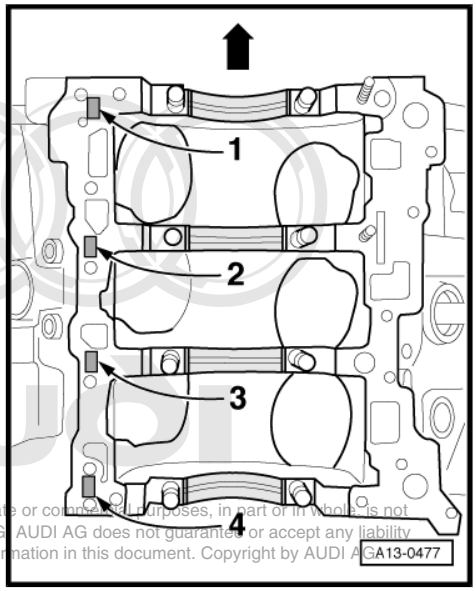

Protected by copyright. Copying for private or commercial purposes, in part or in whole, is not permitted unless authorised by AUDI AG. AUDI AG does not guarantee or accept any liability with respect to the correctness of information in this document. Copyright by AUDI AG.

Allocation of crankshaft bearing shells for bearing caps

- ♦ The bearing caps are assigned bearing shells of the correct thickness at the factory. Coloured dots on bearing shell are used to identify bearing shell thickness.
- ♦ The correct allocation of bearing shells to crankshaft is indicated by a sequence of letters on the crankshaft flank. The number “1” -arrow- preceding the sequence of letters indicates the colour code for No. 1 bearing.

Letter on crankshaft		Colour of bearing
G	=	Yellow
B	=	Blue
S	=	Black

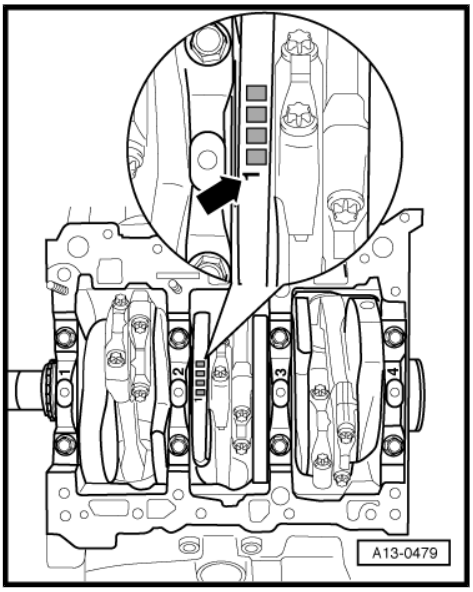

Installing crankshaft bearing caps

– Renew bolts -A- and nuts -1 … 8-

– Insert dowel sleeves in cylinder block.

– Tighten bearing cap nuts and bolts in following sequence:

Stage	Tightening
I	– Screw in bolts -A- finger-tight.
II	– Tighten nuts -1 ... 8- to 35 Nm using torque wrench.
III	– Turn nuts -1 … 8- 90° further ($^1/_4$ turn) using a rigid wrench.
IV	– Tighten bolts -A- to 20 Nm.
V	– Turn bolts -A- 90° further ($^1/_4$ turn) using a rigid wrench.

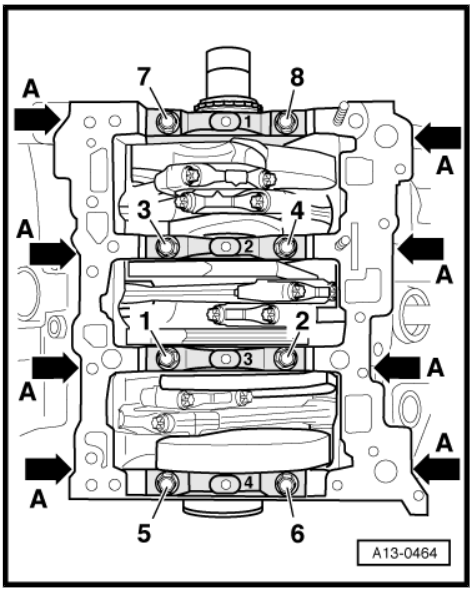

3.1 Crankshaft dimensions

Honing dimension (in mm)	Crankshaft bearing journal ∅	Crankshaft conrod journal ∅
Basic dimension	65.00 - 0.022 - 0.042	54.00 - 0.022 - 0.042
1st undersize	64.75 - 0.022 - 0.042	53.75 - 0.022 - 0.042
2nd undersize	64.50 - 0.022 - 0.042	53.50 - 0.022 - 0.042
3rd undersize	64.25 - 0.022 - 0.042	53.25 - 0.022 - 0.042

3.2 Measuring axial clearance

Special tools and workshop equipment required

- Universal dial gauge bracket -VW 387-

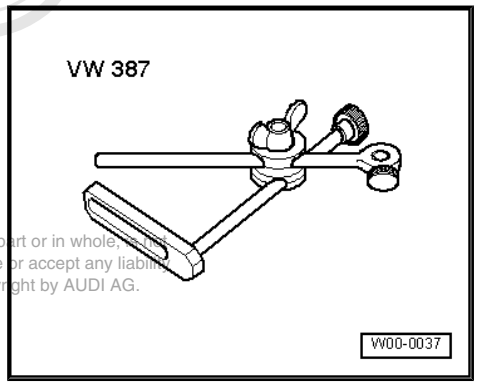

Protected by copyright. Copying for private or commercial purposes, in part or in whole, is not permitted unless authorised by AUDI AG. AUDI AG does not guarantee or accept any liability with respect to the correctness of information in this document. Copyright by AUDI AG.

- Dial gauge -VAS 6079-

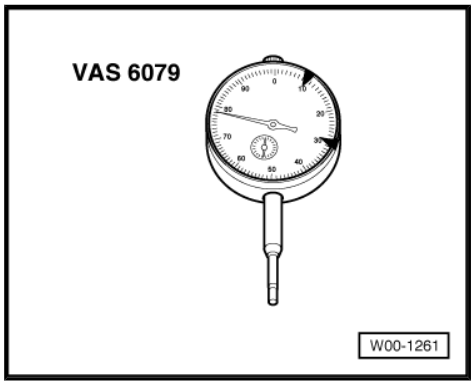

Procedure

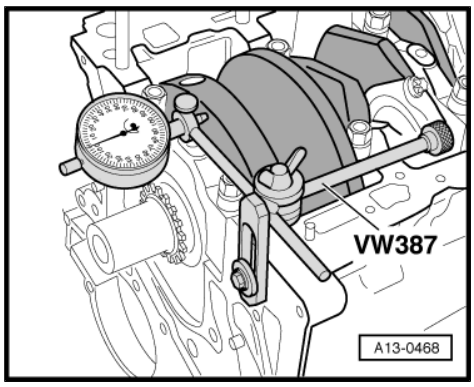

– Bolt dial gauge -VAS 6079- with universal dial gauge bracket -VW 387- onto cylinder block and set it against crank web.

– Push crankshaft against dial gauge by hand and set gauge to “0”.

– Push crankshaft away from dial gauge and read off value.

Axial clearance:

- New: 0.07 ... 0.23 mm.
- Wear limit: 0.25 mm.

3.3 Measuring radial clearance

Special tools and workshop equipment required

- Plastigage

Procedure

Note

- *Do not interchange used bearings.*
- *Bearing shells worn down to nickel layer must be renewed.*

Protected by copyright. Copying for private or commercial purposes, in part or in whole, is not permitted unless authorised by AUDI AG. AUDI AG does not guarantee or accept any liability with respect to the correctness of information in this document. Copyright by AUDI AG.

– Remove main bearing caps and clean bearing caps and journals.

– Place a length of Plastigage corresponding to the width of the bearing on the bearing journal or bearing shell.

• The Plastigage must rest in the middle of the bearing shell

– Mount main bearing cap and tighten to 30 Nm. Do not rotate crankshaft.

– Remove main bearing cap once more.

– Compare width of Plastigage with measurement scale:

Radial clearance:

• New: 0.018 ... 0.045 mm.

• Wear limit: 0.080 mm.

3.4 Removing and installing drive chain sprocket for oil pump

Special tools and workshop equipment required

- Fitting sleeve -30-100-

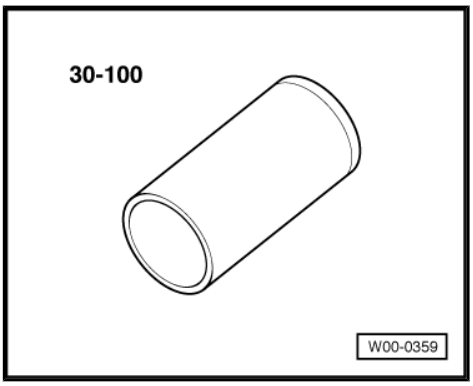

- Two-arm puller, e.g. claw-type puller Kukko 44-1
- Protective gloves

Removing

- Engine removed.

– Remove sealing flange (front).

– Pull chain sprocket off crankshaft with a puller -2- (normal commercial type); use a suitable washer -1- to protect end of crankshaft.

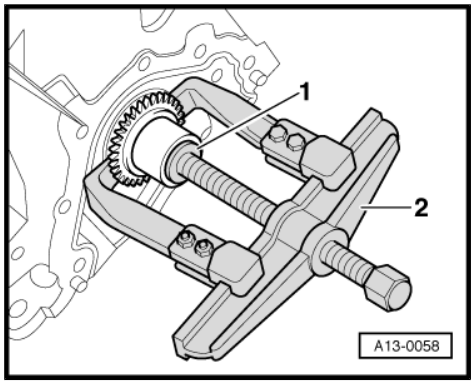

Installing

Installation is carried out in the reverse order; note the following:

– Heat chain sprocket in oven for approx. 15 minutes to 220°C.

> ⚠ WARNING
>
> *Wear protective gloves!*

– Fit chain sprocket on end of crankshaft using pliers, and press onto crankshaft as far as the stop using fitting sleeve -30-100- .

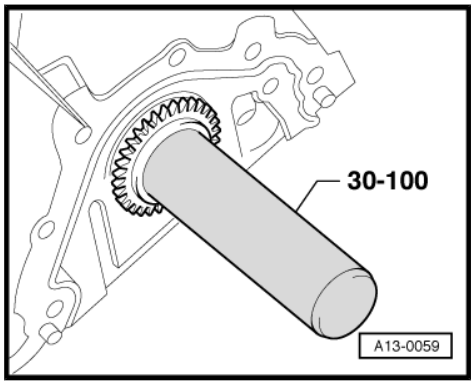

Protected by copyright. Copying for private or commercial purposes, in part or in whole, is not permitted unless authorised by AUDI AG. AUDI AG does not guarantee or accept any liability with respect to the correctness of information in this document. Copyright by AUDI AG.

4 Dismantling and assembling pistons and conrods

Note

Oil spray jet for piston cooling ⇒ page 58 .

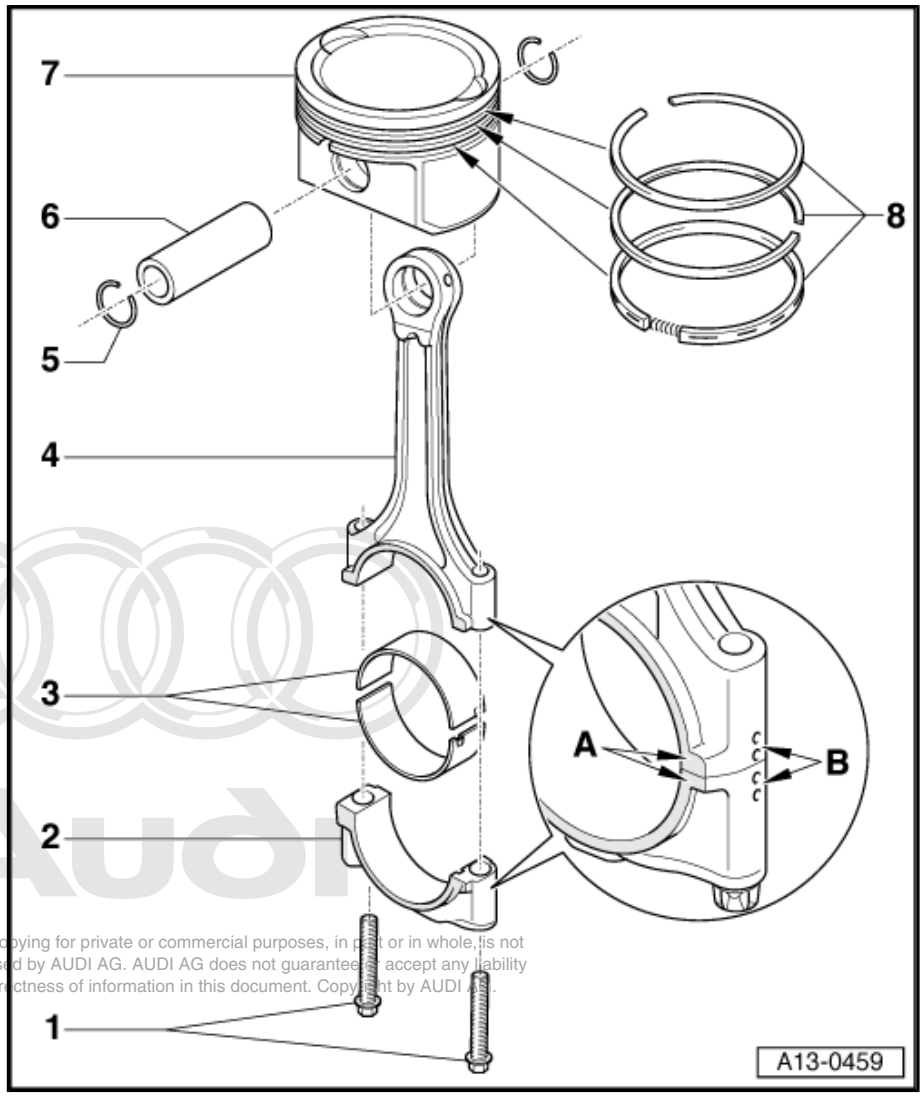

1 - Conrod bolt - 30 Nm + 90° (1/4 turn) further

- ❑ Renew
- ❑ Lubricate threads and contact surface
- ❑ To measure radial clearance, tighten to 30 Nm but not further

2 - Conrod bearing cap

- ❑ Do not interchange
- ❑ Mark cylinder allocation with a coloured pen -B- ⇒ page 57
- ❑ When installing the bearing cap, the projections on the side of the conrod must be on the same side -A-
- ❑ Installation position of conrod pairs ⇒ page 57

3 - Bearing shell

- ❑ Note installation position
- ❑ Do not interchange used bearing shells (mark)
- ❑ Measuring radial clearance ⇒ page 58
- ❑ To measure radial clearance, tighten bolts ⇒ Item 1 (page 55) to 30 Nm but not further

Protected by copyright. Copying for private or commercial purposes, in part or in whole, is not permitted unless authorised by AUDI AG. AUDI AG does not guarantee or accept any liability with respect to the correctness of information in this document. Copyright by AUDI AG.

4 - Conrod

- ❑ Only renew as a set
- ❑ Mark cylinder allocation with a coloured pen -B- ⇒ page 57
- ❑ When installing the bearing cap, the projections on the side of the conrod must be on the same side -A-
- ❑ Installation position of conrod pairs ⇒ page 57

5 - Circlip

6 - Piston pin

- ❑ If difficult to move, heat piston to 60°C
- ❑ Remove and install using drift -VW 222 A-

7 - Piston

- ❑ Installation position and allocation of piston/cylinder ⇒ page 57

- ❑ Arrow on piston crown points to pulley end
- ❑ Checking ⇒ page 56
- ❑ Install using piston ring clamp
- ❑ Piston and cylinder dimensions ⇒ page 58
- ❑ Checking cylinder bore ⇒ page 57

8 - Piston rings

- ❑ Offset gaps by 120°
- ❑ Remove and install using piston ring clamp
- ❑ “TOP” marking or lettering must face towards piston crown
- ❑ Checking ring gap ⇒ page 56
- ❑ Checking ring to groove clearance ⇒ page 56

Checking piston ring gap

– Insert ring at right angle to cylinder wall from above and push down into lower cylinder opening approx. 15 mm from bottom of cylinder. To do so, use a piston without rings.

Piston ring (in mm)	New	Wear limit
1st compression ring	0.35 … 0.50	0.8
2nd compression ring	0.60 … 0.80	1.0
Oil scraper ring	0.25 … 0.50	0.8

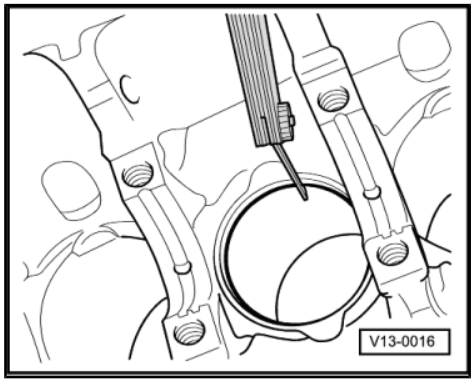

Checking ring to groove clearance

– Clean groove in piston before checking clearance.

Piston ring (in mm)	New	Wear limit
Compression rings	0.02 … 0.08	0.20
Oil scraper ring	0.02 … 0.08	0.15

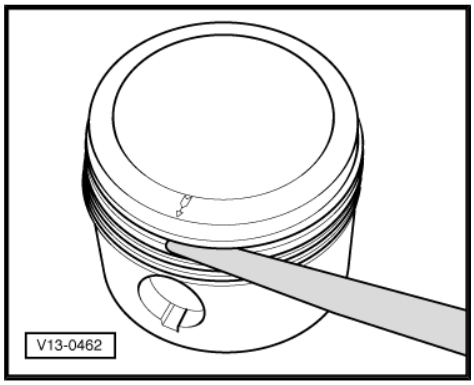

Checking piston

– Using a micrometer (75 ... 100 mm), measure approx. 10 mm from the lower edge, perpendicular to the piston pin axis.

• Max. deviation from nominal dimension: 0.04 mm.

Nominal dimension ⇒ page 58 .

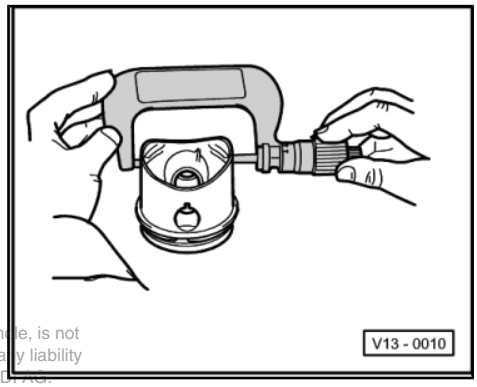

Protected by copyright. Copying for private or commercial purposes, in part or in whole, is not permitted unless authorised by AUDI AG. AUDI AG does not guarantee or accept any liability with respect to the correctness of information in this document. Copyright by AUDI AG.

Checking cylinder bore

– Use 50 ... 100 mm internal dial gauge to take measurements at 3 points in transverse direction -A- and longitudinal direction -B-.

• Max. deviation from nominal dimension: 0.08 mm.

Nominal dimension ⇒ page 58 .

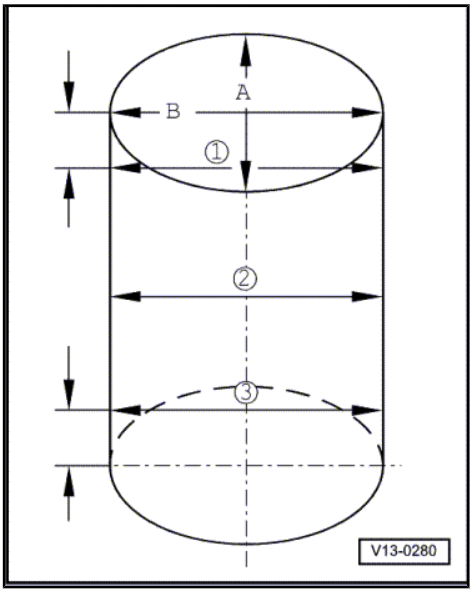

Piston installation position and piston/cylinder allocation

– Use chalk or waterproof felt-tip pen to mark installation position and cylinder allocation on piston crown.

Note

Do not use a centre punch or scriber, as this would damage the coating of the piston crown.

• Installation position: Arrow on piston crown points to pulley end.

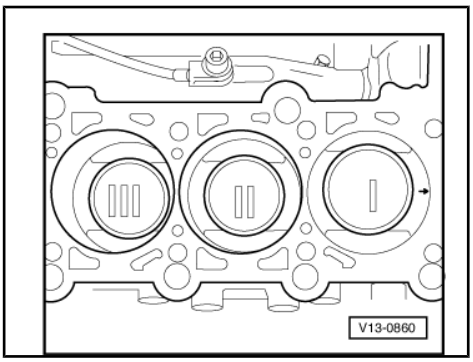

Marking conrods

Note

♦ *Only renew conrods as a complete set.*

♦ *Do not interchange conrod bearings.*

– Prior to removal, use a coloured pen to mark conrod and conrod bearing cap relative to one another, as well as to cylinder -arrow-.

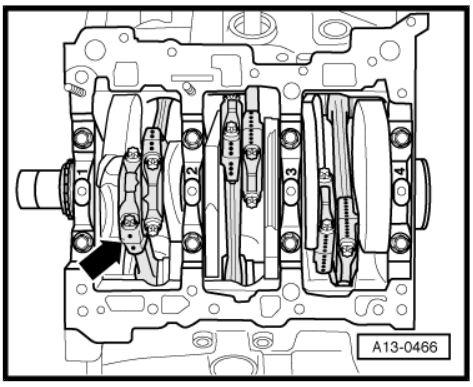

Conrod installation position

• The cast lugs -arrows- at ground surfaces of conrod pairs 1 and 2, 3 and 4, and 5 and 6 must face one another.

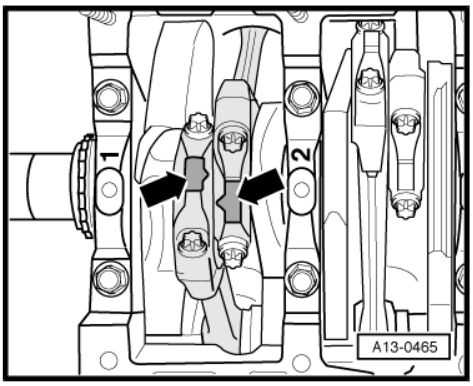

Protected by copyright. Copying for private or commercial purposes, in part or in whole, is not permitted unless authorised by AUDI AG. AUDI AG does not guarantee or accept any liability with respect to the correctness of information in this document. Copyright by AUDI AG.

Oil spray jet for piston cooling

1 - Bolt -10 Nm-

2 - Oil spray jet for piston cooling

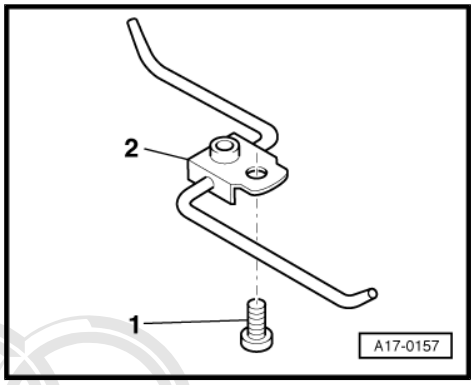

4.1 Piston and cylinder dimensions

Honing dimension (in mm)	Piston ∅	Cylinder bore ∅
Basic dimension	82.455 [11)]	82.51
Repair oversize	82.955 [11)]	83.01

11) Dimensions not including graphite coating (thickness 0.02 mm). The graphite coating will wear down.

4.2 Checking radial clearance of conrods

Protected by copyright. Copying for private or commercial purposes, in part or in whole, is not permitted unless authorised by AUDI AG. AUDI AG does not guarantee or accept any liability with respect to the correctness of information in this document. Copyright by AUDI AG.

Special tools and workshop equipment required

♦ Plastigage

Procedure

– Remove conrod bearing cap. Clean bearing cap and bearing journal.

– Place a length of Plastigage corresponding to the width of the bearing on the bearing journal or bearing shell.

– Fit conrod bearing cap and tighten to 30 Nm. Do not rotate crankshaft.

– Remove conrod bearing cap again.

– Compare width of Plastigage with measurement scale:

• Radial clearance (new): 0.015 … 0.062 mm

• Radial clearance (wear limit): 0.12 mm.

– Renew bolts for conrod bearings.

15 – Cylinder head, valve gear

1 Toothed belt drive

1.1 Toothed belt covers - exploded view

1 - 10 Nm

2 - 10 Nm

3 - Coolant pipe (front)

- ❑ To remove bottom toothed belt guard, only unscrew bolts ⇒ Item 1 (page 59) and ⇒ Item 2 (page 59)
- ❑ The coolant hoses remain connected to coolant pipe

4 - Toothed belt guard (front right)

5 - Toothed belt guard (front left)

6 - Bush

7 - 6 Nm

- ❑ Self-locking
- ❑ Renew

8 - Toothed belt guard - bottom

9 - 10 Nm

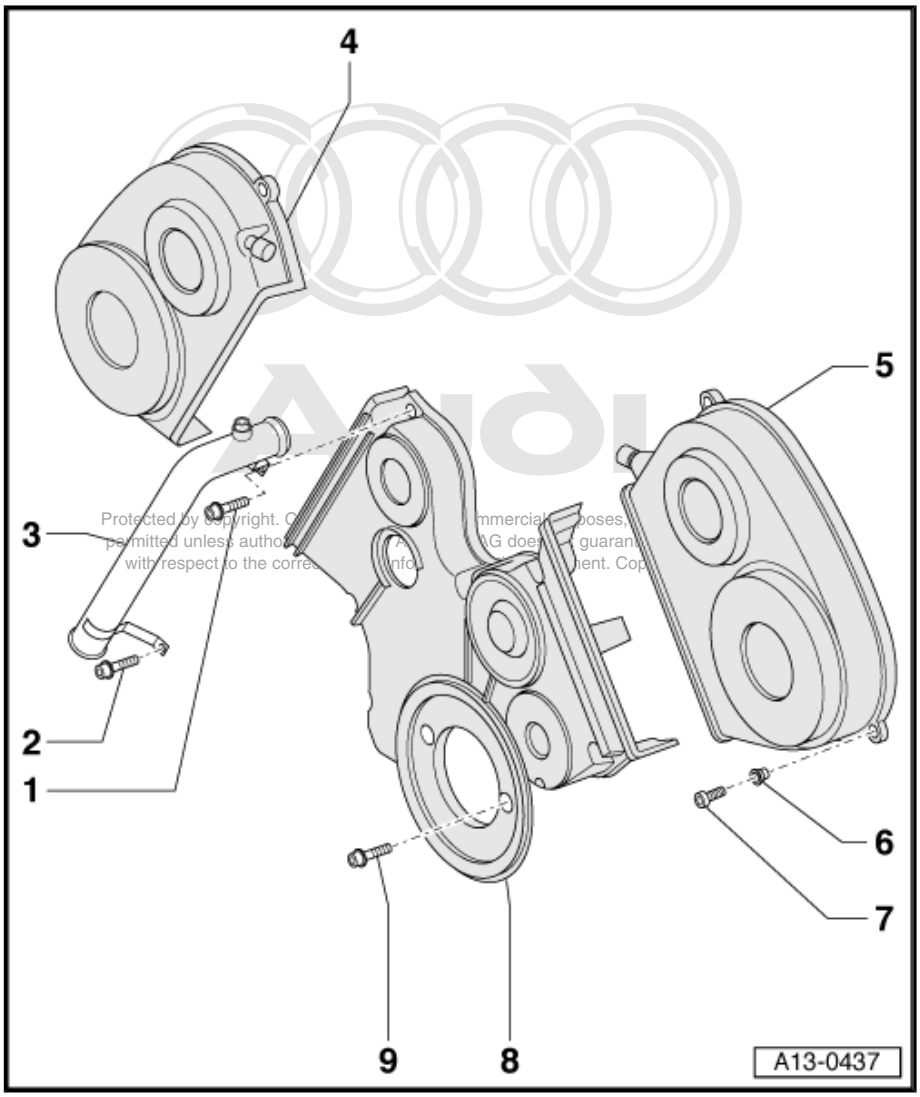

1.2 Toothed belt drive - exploded view

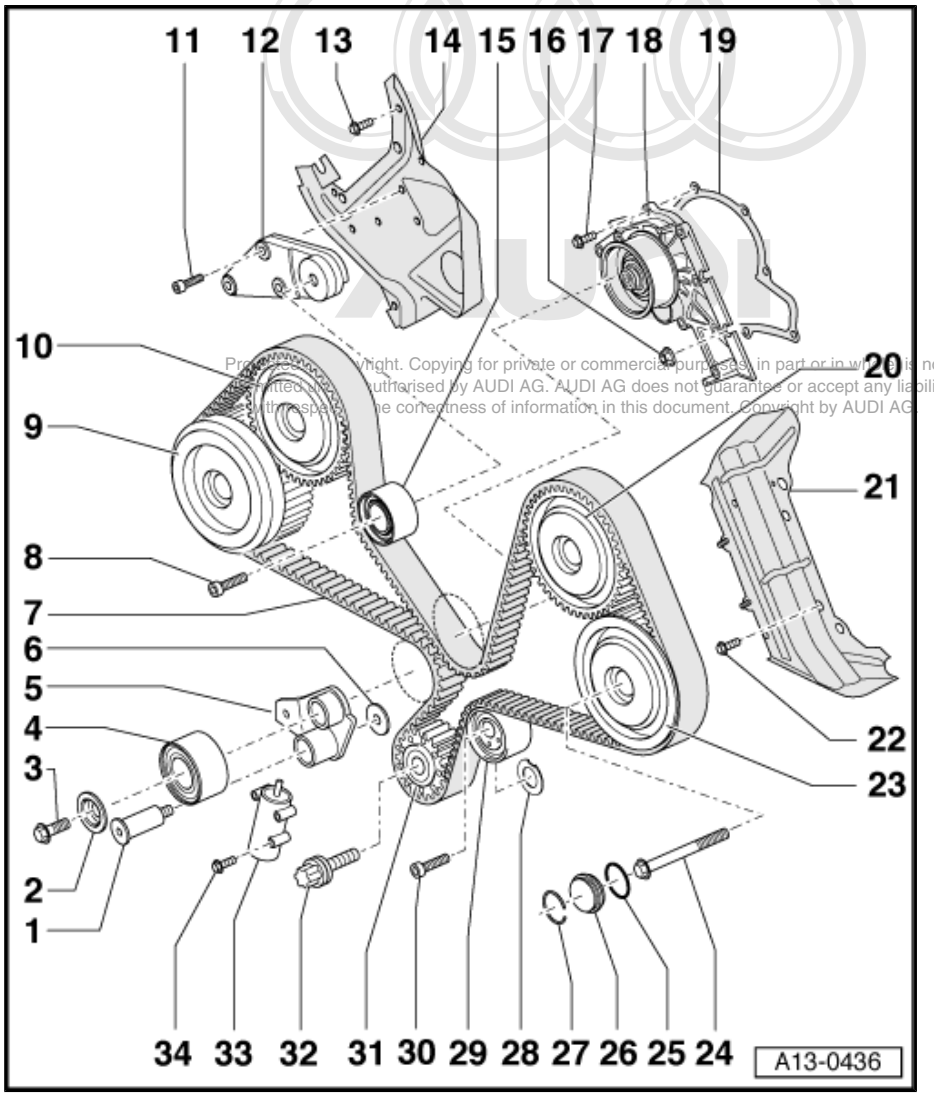

Copyright. Copying for private or commercial purposes, in part or in whole, is not permitted unless authorised by AUDI AG. AUDI AG does not guarantee or accept any liability with respect to the correctness of information in this document. Copyright by AUDI AG

1 - 45 Nm
- ❑ Self-locking
- ❑ Renew

2 - Washer

3 - 45 Nm

4 - Tensioning roller

5 - Tensioning lever
- ❑ Insert washer ⇒ Item 6 (page 60) underneath

6 - Washer for tensioning lever

7 - Toothed belt
- ❑ Before removing, mark direction of rotation with chalk or felt-tipped pen. If the belt runs in the opposite direction when it is refitted, this can cause breakage.
- ❑ Check for wear
- ❑ Removing ⇒ page 62
- ❑ Installing (adjusting valve timing) ⇒ page 69

8 - 45 Nm

9 - Toothed belt sprocket (exhaust camshaft)
- ❑ For cylinder bank 1 (right-side), with damper
- ❑ With camshaft adjuster
- ❑ Identification: “Auslass” (exhaust)

10 - Toothed belt sprocket (inlet camshaft)
- ❑ For cylinder bank 1 (right-side)
- ❑ With camshaft adjuster
- ❑ Identification: “Einlass” (inlet)

11 - 10 Nm
- ❑ Self-locking
- ❑ Renew

12 - Bracket for idler roller

13 - 10 Nm
- ❑ Self-locking
- ❑ Renew

14 - Toothed belt guard (rear right)

15 - Idler wheel

16 - 10 Nm

17 - 10 Nm

18 - Coolant pump

- ❑ Removing and installing ⇒ page 169

19 - Gasket

- ❑ Renew

20 - Toothed belt sprocket (inlet camshaft)

- ❑ For cylinder bank 2 (left-side)
- ❑ With camshaft adjuster
- ❑ Identification: “Einlass” (inlet)

21 - Toothed belt guard (rear left)

22 - 10 Nm

- ❑ Self-locking
- ❑ Renew

23 - Toothed belt sprocket (exhaust camshaft)

- ❑ For cylinder bank 2 (left-side), without damper
- ❑ With camshaft adjuster
- ❑ Identification: “Auslass” (exhaust)

24 - 100 Nm

Protected by copyright. Copying for private or commercial purposes, in part or in whole, is not permitted unless authorised by AUDI AG. AUDI AG does not guarantee or accept any liability with respect to the correctness of information in this document. Copyright by AUDI AG.

- ❑ Use counterhold -T40030- to loosen and tighten

25 - O-ring

- ❑ Renew

26 - Sealing cap

27 - Circlip

28 - Diamond-coated washer for toothed belt sprocket

- ❑ Renew washer if toothed belt sprocket is removed

29 - Eccentric adjuster

30 - 45 Nm

31 - Crankshaft sprocket

32 - Central bolt: 200 Nm + 180° ($^1/_2$ turn) further

- ❑ Renew
- ❑ Do not additionally lubricate
- ❑ Use locking pin -T40026- when loosening and tightening
- ❑ Screwing in locking pin -T40026- ⇒ page 68
- ❑ Renew diamond-coated washer ⇒ Item 28 (page 61) if removed
- ❑ Contact surfaces between toothed belt sprocket, diamond-coated washer and crankshaft must be free of oil.
- ❑ Can only be installed in one position.
- ❑ Depending on version: with or without thrust washer See note ⇒ page 36

33 - Tensioner for toothed belt

34 - 10 Nm

1.3 Removing and installing toothed belt

Special tools and workshop equipment required

- 2-hole pin wrench -3212-
- 2-hole pin wrench -3387-
- Locking pin -T40011-
- Locking pin -T40026-
- Socket -T40028-
- Counterhold -T40030-

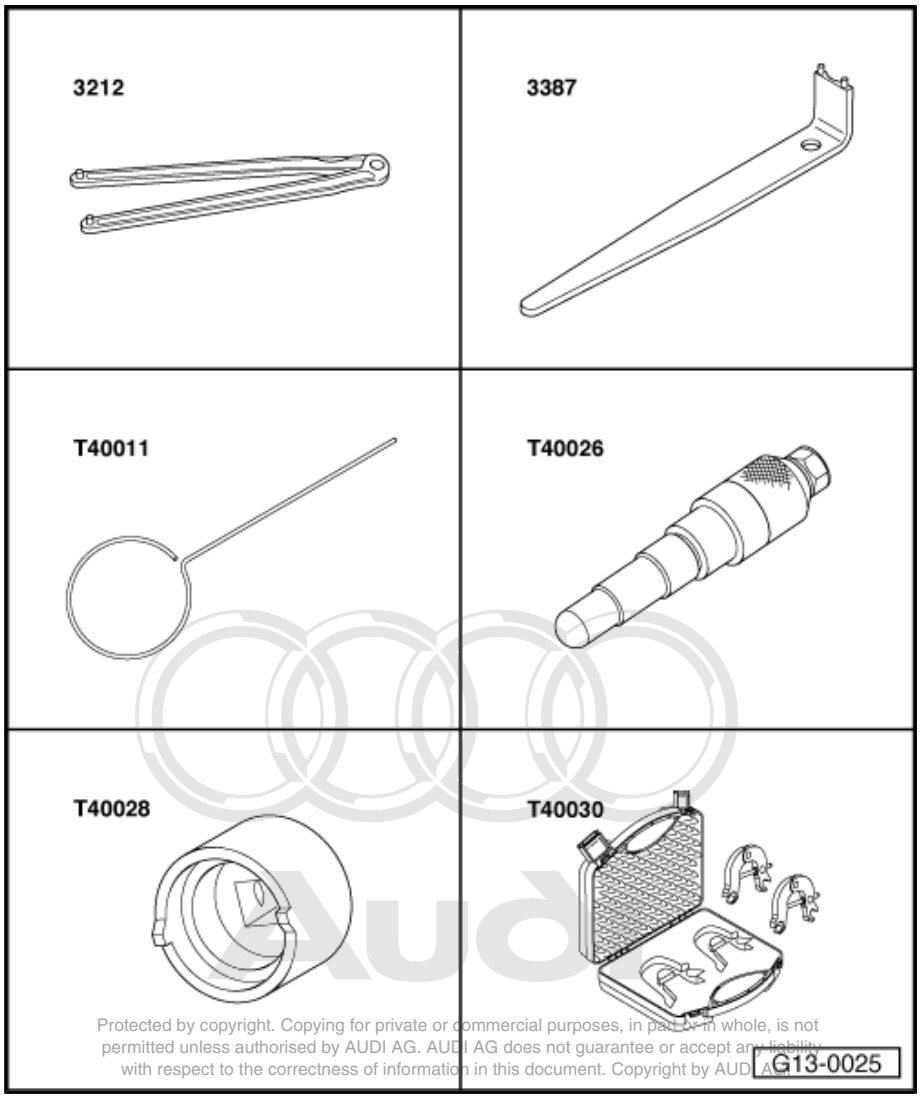

Protected by copyright. Copying for private or commercial purposes, in part or in whole, is not permitted unless authorised by AUDI AG. AUDI AG does not guarantee or accept any liability with respect to the correctness of information in this document. Copyright by AUDI AG.

- Locking pin -T10115-

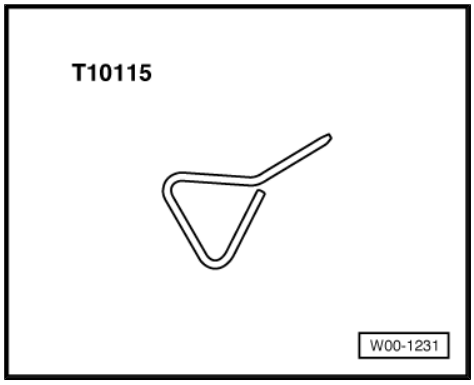

Removing

– Activate jacking mode ⇒ Running gear, front-wheel drive and four-wheel drive; Rep. Gr. 43 ; Operating the air suspension .

– Vehicles with auxiliary heater: remove bolts -arrows- securing exhaust pipe for auxiliary/additional heater to noise insulation.

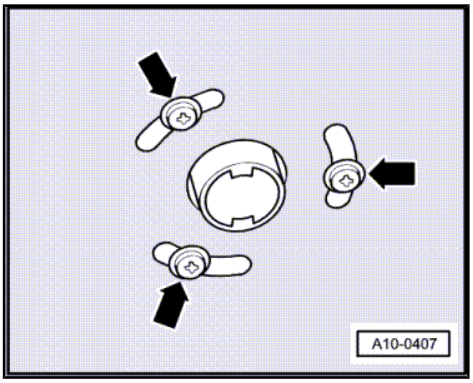

– Loosen quick release fasteners -1- and remove front noise insulation.

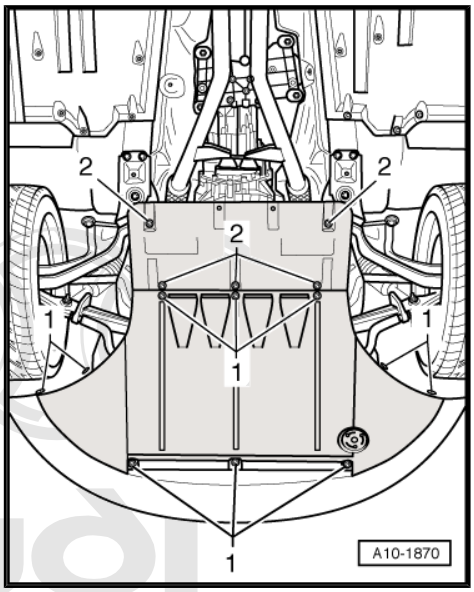

– Detach hose -arrow- to secondary air pump at bottom of air cleaner housing.

Protected by copyright. Copying for private or commercial purposes, in part or in whole, is not permitted unless authorised by AUDI AG. AUDI AG does not guarantee or accept any liability with respect to the correctness of information in this document. Copyright by AUDI AG.

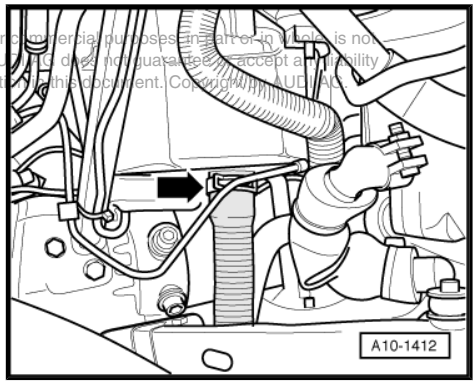

– Pull off rear engine cover -arrows-.

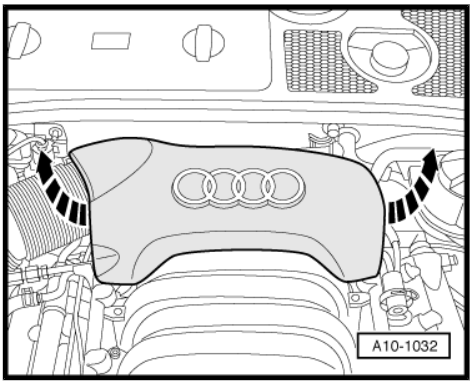

– Remove cover for right suspension turret; to do so, detach spreader clips -1- and unscrew bolted joint -2-.

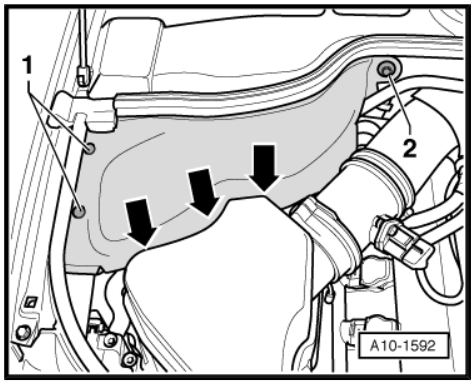

– Detach electrical connector -1-.
– Unscrew bolts -arrows- and remove air cleaner housing.

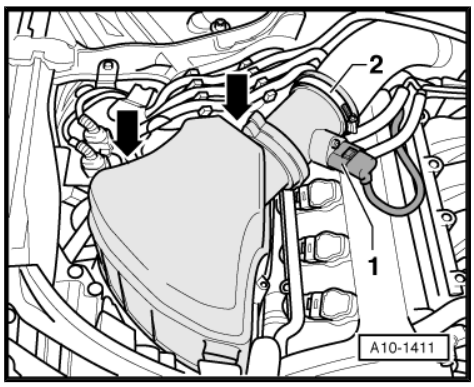

Note

Ignore item marked -2-.

– Pull off front engine cover -arrows-.

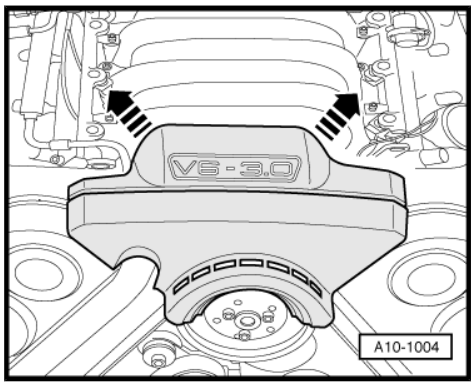

Note

Before removing, mark direction of rotation of poly V-belt with chalk or felt-tipped pen. If the belt runs in the opposite direction when it is refitted, this can cause breakage.

– To slacken the tensioner for poly V-belt, apply pressure to tensioner by moving poly V-belt lever -3299- and bracket -3299/1- in the direction of the -arrow-.

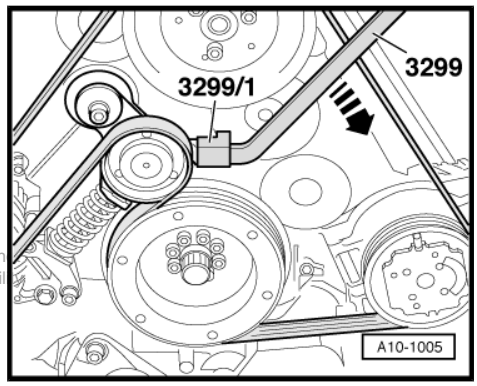

– Remove poly V-belt from pulley for vane pump.

Protected by copyright. Copying for private or commercial purposes, in part or in whole, is not permitted unless authorised by AUDI AG. AUDI AG does not guarantee or accept any liability with respect to the correctness of information in this document. Copyright by AUDI AG.

– Unbolt poly V-belt pulley at vane pump -arrows-, using 2-hole pin wrench -3212- as a counterhold.

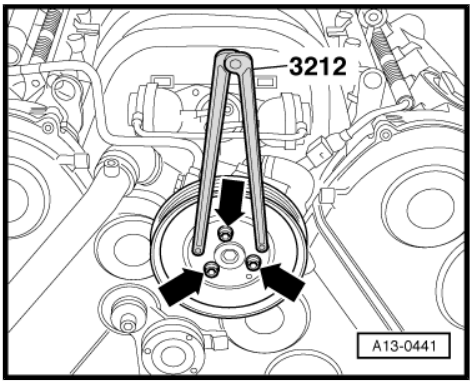

– To lock the tensioner for poly V-belt, apply pressure to tensioner by moving poly V-belt lever -3299- and bracket -3299/1- in the direction of the -arrow-, lock tensioner into place using locking pin -T10115- and release pressure.

– Unscrew bolts -1- and -2- and remove tensioner for poly V-belt (tensioner remains locked).

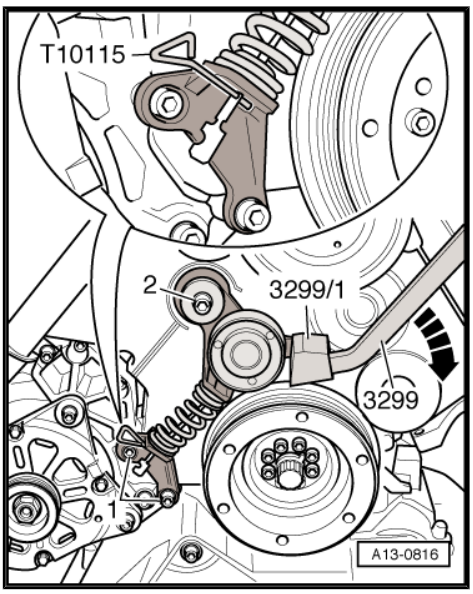

– Unscrew the 8 bolts -1-.

– Remove vibration damper -2- and thrust washer -3-.

Note

The thrust washer -3- is only fitted in conjunction with toothed belt sprocket -06C 105 063 A- . If toothed belt sprocket -06C 105 063 B- is fitted, do NOT install thrust washer.

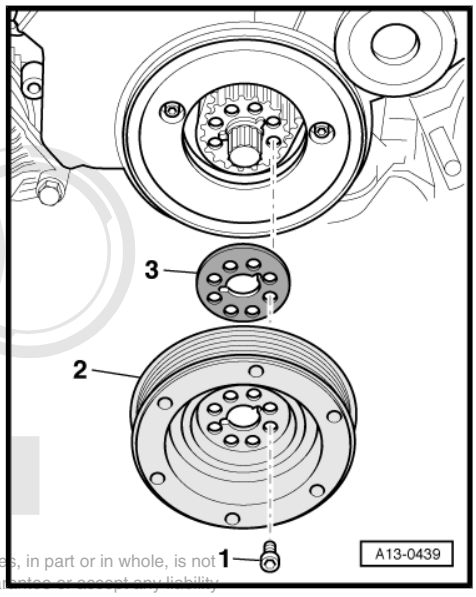

Protected by copyright. Copying for private or commercial purposes, in part or in whole, is not permitted unless authorised by AUDI AG. AUDI AG does not guarantee or accept any liability with respect to the correctness of information in this document. Copyright by AUDI AG.

– Unscrew bolts -1 … 12- and remove toothed belt guards.

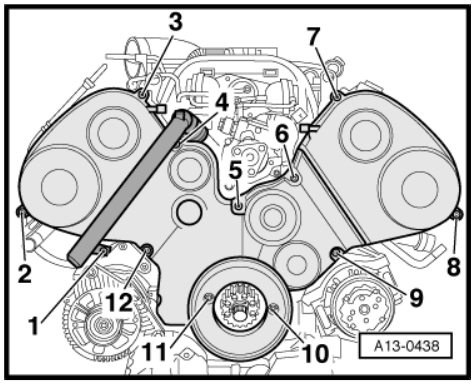

– Unscrew bolts -1- and -3-.
– Disconnect hose -4- at pipe for secondary air.
– Pull guide tube -2- for oil dipstick upwards out of top section of sump and fold forwards.

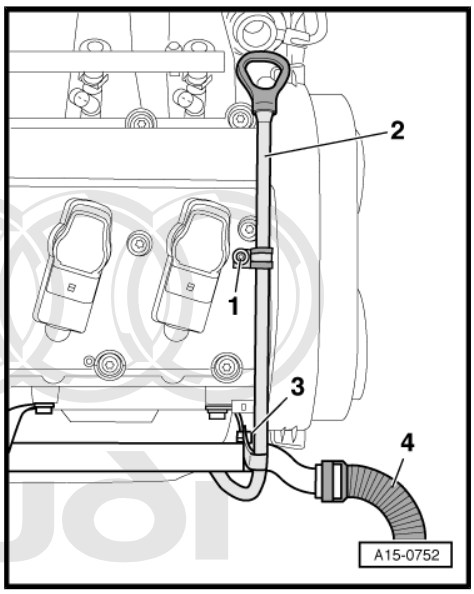

Protected by copyright. Copying for private or commercial purposes, in part or in whole, is not
permitted unless authorised by AUDI AG. AUDI AG does not guarantee or accept any liability
with respect to the correctness of information in this document. Copyright by AUDI.

– Unscrew bolts -5- and -6- on cylinder head cover (right-side).
– Unplug electrical connectors -1 … 4-.
– Pull out ignition coils -arrows-.

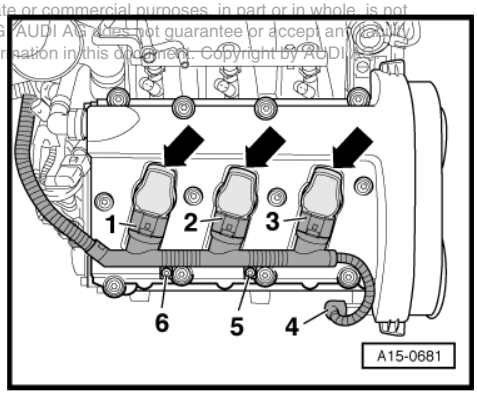

– Detach crankcase breather hose -arrow-.
– Unscrew bolts for cylinder head cover (right-side) in the sequence -12 ... 1- and remove cylinder head cover.

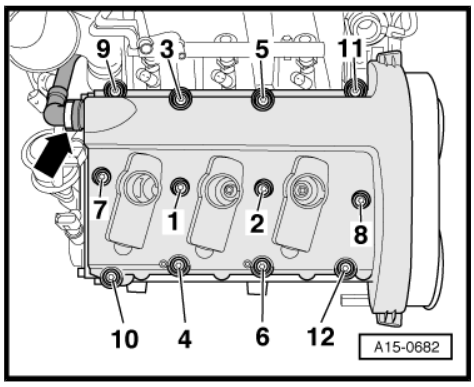

– Unscrew bolts -4- and -5- on cylinder head cover (left-side).
– Unplug electrical connectors -1 ... 3- and -6-.
– Pull out ignition coils -arrows-.

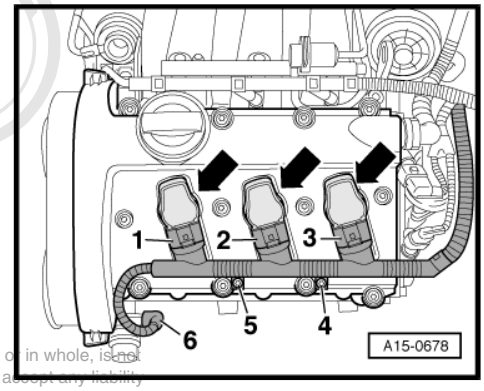

Protected by copyright. Copying for private or commercial purposes, in part or in whole, is not permitted unless authorised by AUDI AG. AUDI AG does not guarantee or accept any liability with respect to the correctness of information in this document. Copyright by AUDI AG.

– Detach crankcase breather hose -arrow-.
– Unscrew bolts for cylinder head cover (left-side) in the sequence -12 ... 1- and remove cylinder head cover.

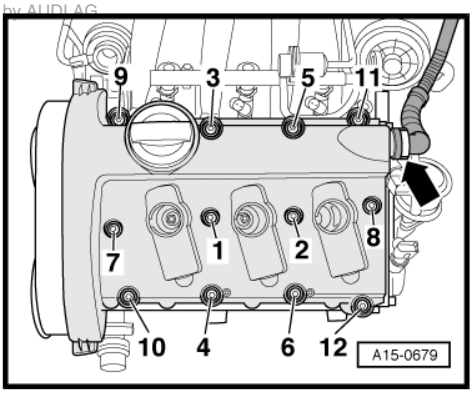

WARNING

The engine must only be turned at the crankshaft, in the direction of normal engine rotation (clockwise).

– Turn engine until cams -arrows- of intake and exhaust camshafts at cylinder No. 3 (right-side cylinder bank) point upwards at equal angles.

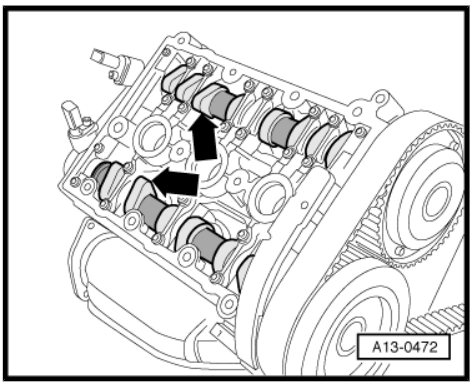

Note

Turn over the engine at the central bolt on the crankshaft.

– Attach counterhold -T40030- to camshafts of cylinder head (right-side).

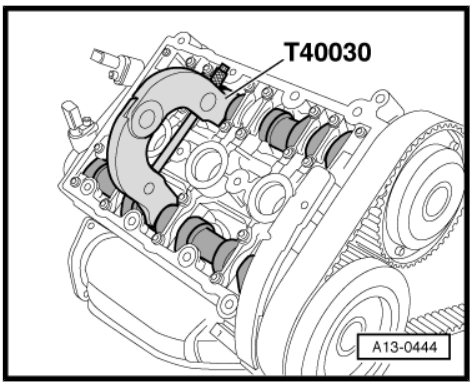

Note

Turn the crankshaft slightly backwards and forwards so that the claws of counterhold -T40030- can engage properly in the camshafts.

– Expand counterhold -T40030- by means of the threaded spindle (tightening torque max. 10 Nm) until it is seated with zero play.

– Attach counterhold -T40030- on cylinder head (left-side) in the same way.

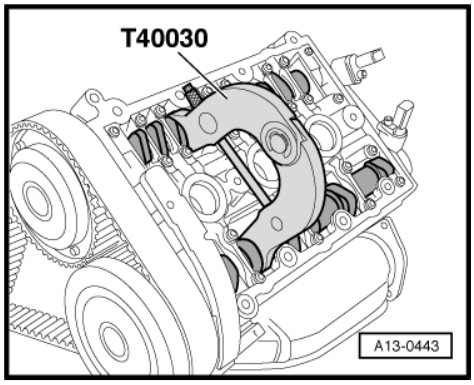

– Unscrew plug for TDC marking from cylinder block.
– Screw in locking pin -T40026- in the hole for the plug and tighten; if necessary, turn the crankshaft backwards and forwards slightly.

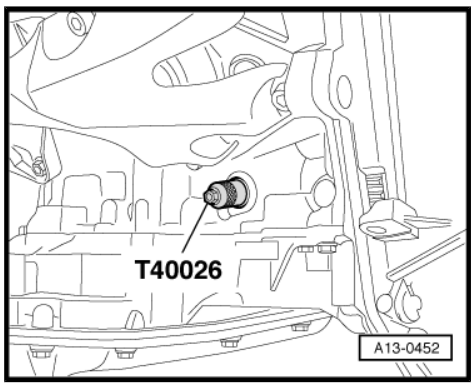

Note

Catch escaping oil with a cloth.

– Pry off circlips -1- for sealing caps -2- on all camshaft sprockets using a screwdriver -3-.

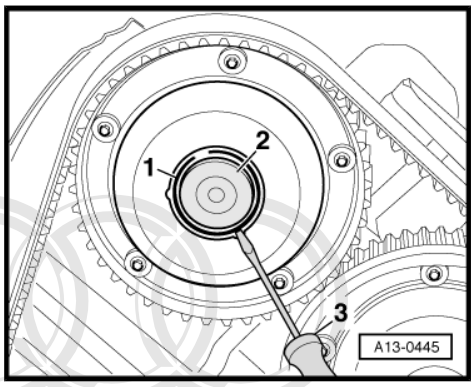

– Loosen securing bolts -1 ... 4- for camshaft sprockets.

Note

Loosen bolts but do not remove.

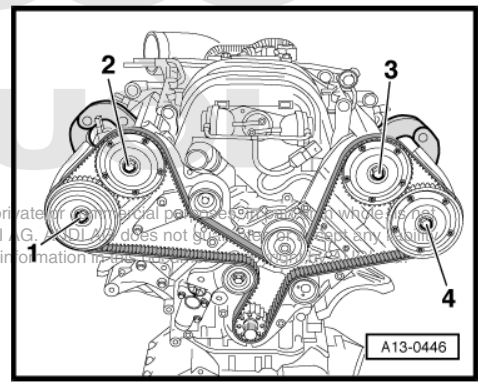

Protected by copyright. Copying for private or commercial purposes, in part or in whole, is not permitted unless authorised by AUDI AG. AUDI AG does not guarantee or assume any liability with respect to the correctness of information contained in this document.

– Turn toothed belt tensioning roller in direction of the arrow using an 8 mm hexagon key until tensioning lever compresses tensioner far enough to allow locking pin -T40011- to be inserted into the holes in the piston and the housing.

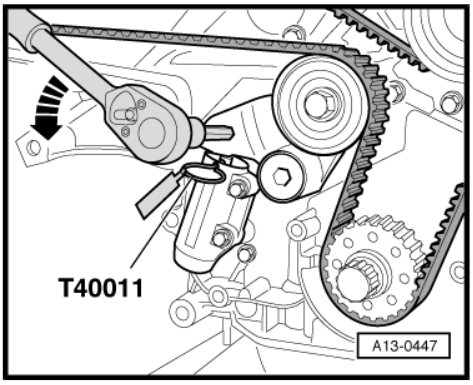

Note

- *The toothed belt tensioner is oil-damped and can therefore only be compressed slowly by applying constant pressure.*
- *Mark rotation direction of toothed belt. Running in opposite direction can cause breakage.*

– Loosen bolt -arrow- for eccentric adjuster.

– Remove toothed belt.

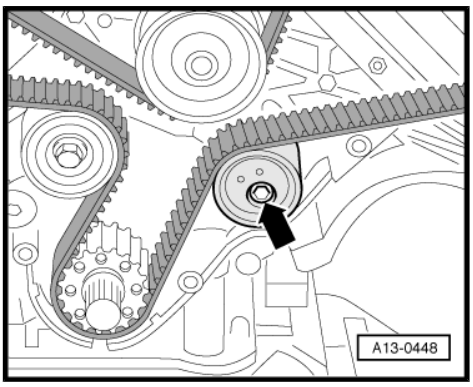

Installing (adjusting valve timing)

- Camshafts locked in position with counterhold -T40030- .
- Crankshaft locked in position with locking pin -T40026- .
- Camshaft sprockets are able to turn.

Note

- *Renew gaskets, seals and self-locking bolts.*
- *The crankshaft must not be at TDC at any cylinder when the camshaft is turned. Otherwise, there is a risk of damage to valves and piston crowns.*

– Tighten the camshaft sprocket bolts until the sprockets -1 … 4- can still just be turned, but do not move axially.

– Fit toothed belt as illustrated.

- To ensure accurate valve timing adjustment, the toothed belt must be exactly in line with the front edge of all belt sprockets.

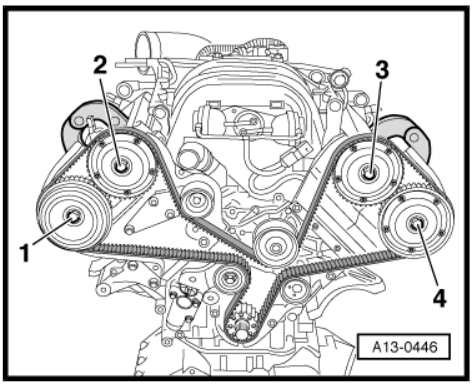

– Using 2-hole pin wrench -3387- , turn the eccentric adjuster -1- clockwise until the handle of the 2-hole pin wrench is exactly over the centre axis of coolant pump pulley -2-.

– Hold the 2-hole pin wrench in this position and tighten bolt -3- to 45 Nm.

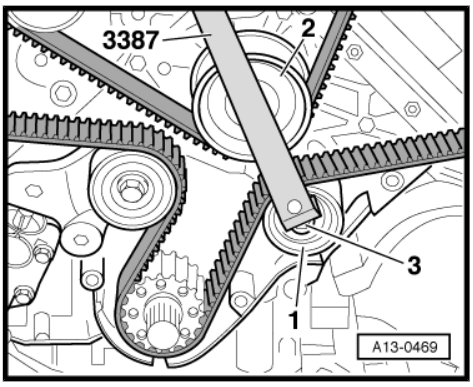

Protected by copyright. Copying for private or commercial purposes, in part or in whole, is not permitted unless authorised by AUDI AG. AUDI AG does not guarantee or accept any liability with respect to the correctness of information in this document. Copyright by AUDI AG.

– Apply torque wrench -V.A.G 1331- vertically to hexagon socket of tensioning lever.
– Pre-tension toothed belt by applying a torque of 45 Nm in the direction indicated by the -arrow-.

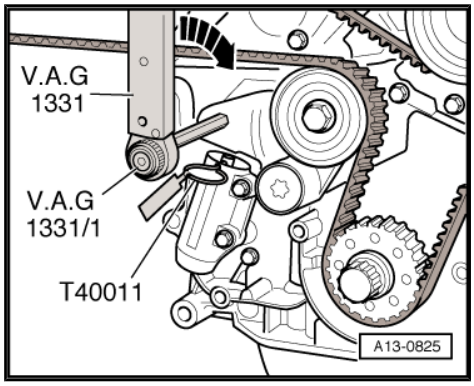

– Turn toothed belt tensioning roller in direction of the -arrow- using an 8 mm hexagon key until the locking pin -T40011- can be removed.

Protected by copyright. Copying for private or commercial purposes, in part or in whole, is not permitted unless authorised by AUDI AG. AUDI AG does not guarantee or accept any liability with respect to the correctness of information in this document. Copyright by AUDI AG.

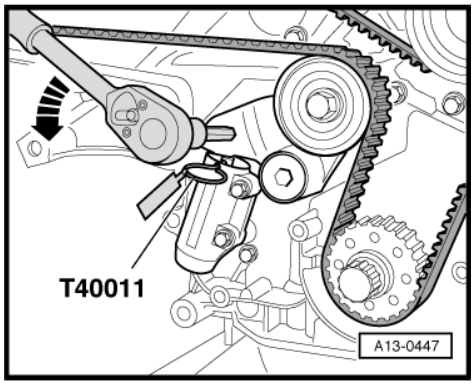

– Apply torque wrench -V.A.G 1331- vertically to hexagon socket of tensioning lever.
– Tension toothed belt by applying a torque of 25 Nm in the direction indicated by the arrow.

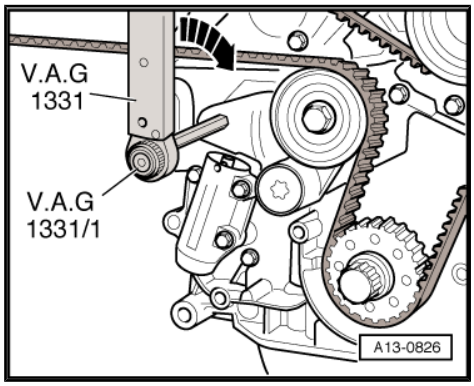

– Apply socket -T40028- to camshaft adjuster for exhaust camshaft on cylinder bank (left-side).
– Turn rotor of camshaft adjuster clockwise as far as it will go -arrow- with a torque of 10 Nm.

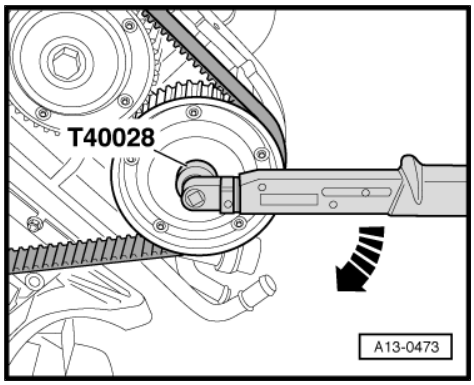

– Turn rotor of camshaft adjuster on cylinder bank (right-side) clockwise as far as it will go -arrow- with a torque of 10 Nm.

– Tighten the camshaft sprockets to 100 Nm.

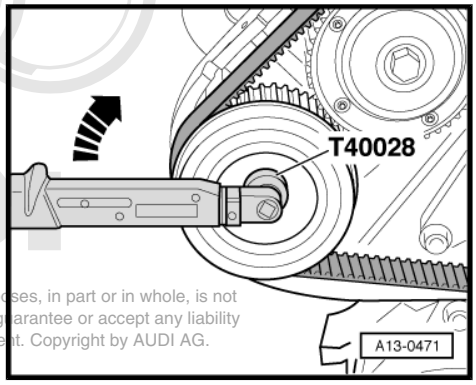

Protected by copyright. Copying for private or commercial purposes, in part or in whole, is not permitted unless authorised by AUDI AG. AUDI AG does not guarantee or accept any liability with respect to the correctness of information in this document. Copyright by AUDI AG.

– Insert protective caps -2- with new O-rings into camshaft sprockets and secure with circlip -1-.

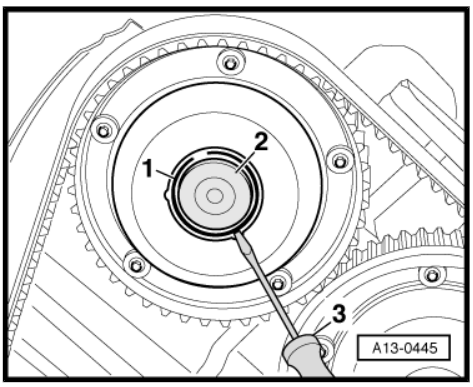

Note

Ignore item marked -3-.

– Remove counterhold -T40030- .

– Remove locking pin -T10026- and screw sealing plug for TDC marking into cylinder block with new O-ring seal.

Perform further installation in reverse order, paying attention to the following:

– Install cylinder head cover: left-side ⇒ page 74 , right-side ⇒ page 76 .

– Install toothed belt guards ⇒ page 59 .

– Install vibration damper ⇒ page 36 .

– Install tensioner for poly V-belt ⇒ page 35 .

– Install poly V-belt ⇒ page 33 .

– Deactivate jacking mode ⇒ Running gear, front-wheel drive and four-wheel drive; Rep. Gr. 43 ; Operating the air suspension .

Tightening torques

Component	Nm
Eccentric adjuster to front sealing flange	45
Camshaft sprocket to camshaft	100
Sealing plug in cylinder block	25

2 Removing and installing cylinder head

Note

- *Renew the cylinder head bolts.*
- *Renew self-locking nuts and bolts when performing assembly work.*
- *Renew bolts which are tightened to a specified angle as well as oil seals and gaskets.*
- *When installing an exchange cylinder head with fitted camshafts, the contact surfaces between bucket tappets and cams must be oiled after installing the head.*
- *The plastic protectors fitted to protect the open valves should not be removed until the cylinder head is ready to be fitted.*
- *When fitting a new cylinder head or cylinder head gasket, drain off all the old coolant and refill with new coolant.*
- *When renewing a cylinder head, a sealing cap (core plug) must be driven into the front of the cylinder head* *⇒ page 74* .
- *Cylinder heads which have cracks between the valve seats or between valve seat inserts and the spark plug thread can be used further without reducing service life, provided the cracks do not exceed a maximum of 0.3 mm in width, or when no more than the first 4 turns of the spark plug threads are cracked.*

Protected by copyright. Copying for private or commercial purposes, in part or in whole, is not permitted unless authorised by AUDI AG. AUDI AG does not guarantee or accept any liability with respect to the correctness of information in this document. Copyright by AUDI AG.

2.1 Cylinder head - exploded view of components

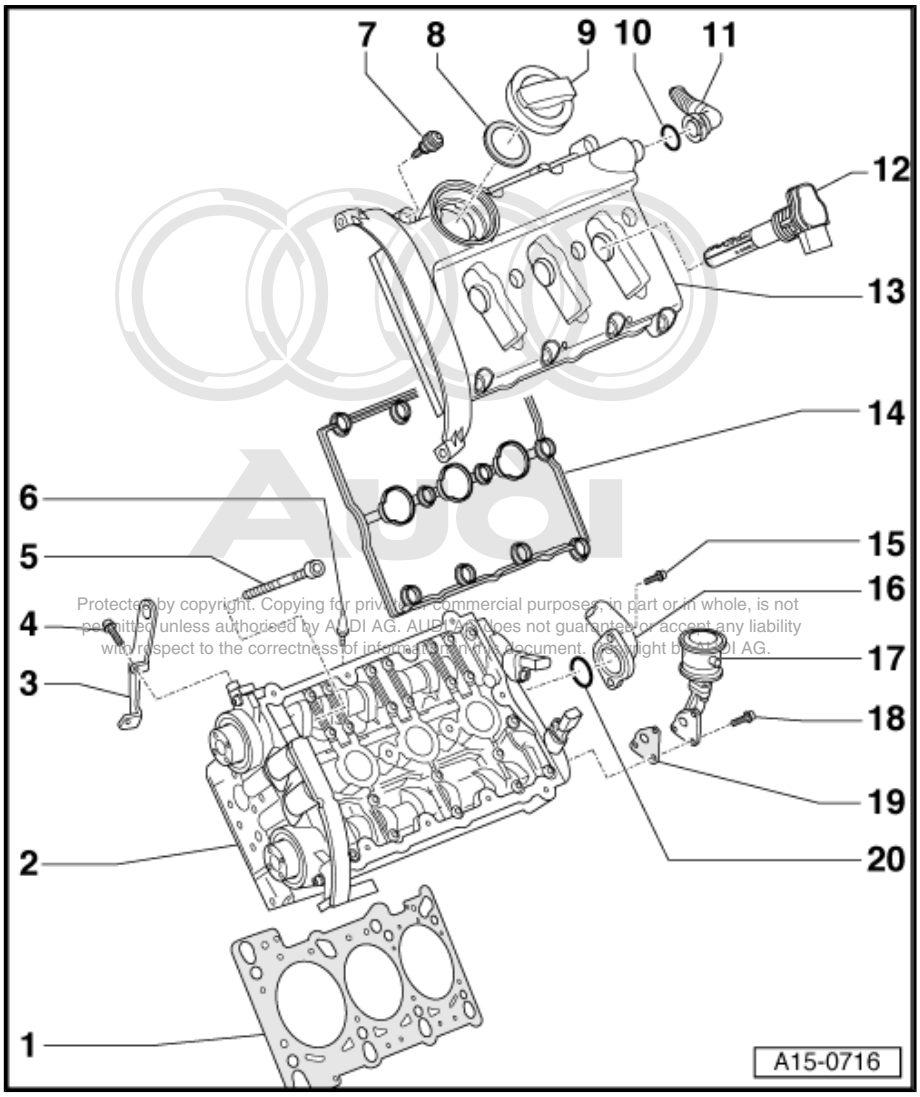

Protected by copyright. Copying for private or commercial purposes, in part or in whole, is not permitted unless authorised by AUDI AG. AUDI AG does not guarantee or accept any liability with respect to the correctness of information in this document. Copyright by AUDI AG.

1 - Cylinder head gasket

- ❑ Renew ⇒ Removing cylinder head ⇒ page 79 onwards
- ❑ Installation position: Part No. towards cylinder head
- ❑ After replacing, fill with new coolant

2 - Cylinder head

- ❑ Removing cylinder head (left-side) ⇒ page 79
- ❑ Removing cylinder head (right-side) ⇒ page 83
- ❑ Checking for distortion ⇒ page 74
- ❑ Machining dimension ⇒ page 74
- ❑ Driving sealing cap into cylinder head ⇒ page 74
- ❑ Installing ⇒ page 88
- ❑ After replacing, fill with new coolant

3 - Lifting eye

4 - 23 Nm

5 - Cylinder head bolt

- ❑ Renew
- ❑ Note sequence when loosening ⇒ page 83 and ⇒ page 87
- ❑ Note sequence when tightening ⇒ page 90

6 - Centering pin for intake manifold

7 - Special bolt -10 Nm-

- ❑ Renew if damaged or leaking
- ❑ Note sequence when tightening ⇒ page 76 and ⇒ page 79

8 - Seal

- ❑ Renew if damaged or leaking

9 - Filler cap

10 - O-ring

- ❑ Renew

11 - Crankcase breather hose

12 - Ignition coil

13 - Cylinder head cover

- ❑ Removing and installing: left-side ⇒ page 74 , right-side ⇒ page 76

14 - Gasket for cylinder head cover

- ❑ Renew if damaged or leaking

15 - 10 Nm

16 - Coolant pipe (rear)

17 - Combination valve for secondary air

18 - 10 Nm

19 - Gasket

❑ Renew

20 - O-ring

❑ Renew

Checking cylinder head for distortion

– Use straight edge and feeler gauge to measure for distortion at several points.

• Max. permissible distortion: 0.1 mm

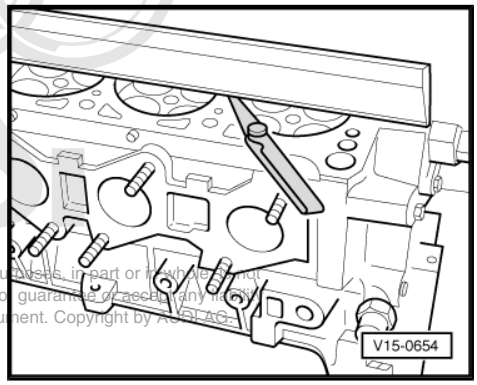

Protected by copyright. Copying for private or commercial purposes, in part or in full, is not permitted unless authorised by AUDI AG. AUDI AG does not guarantee or accept any liability with respect to the correctness of information in this document. Copyright by AUDI AG.

Cylinder head machining limit

– Machining of the cylinder head (surface grinding) is only permissible down to the minimum dimension -a-.

• Minimum dimension: -a- = 139.25 mm

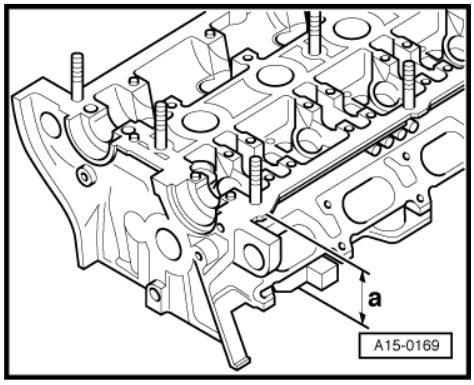

Driving sealing cap into cylinder head

Replacement cylinder heads can be used on both the left and right-side and must be fitted with a sealing cap on the appropriate front side.

– Coat edge of sealing cap with sealant; sealant ⇒ Parts catalogue

– Use drift -VW 295- to drive sealing cap into cylinder head until flush.

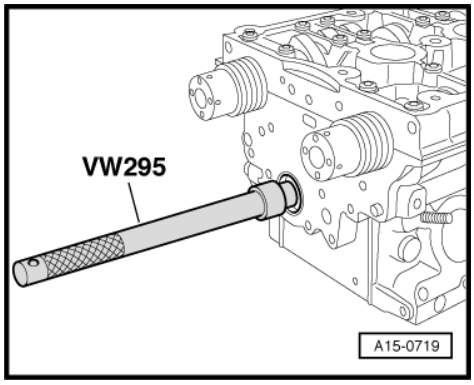

2.2 Removing and installing cylinder head cover (left-side)

Special tools and workshop equipment required

♦ Puller -T40039-

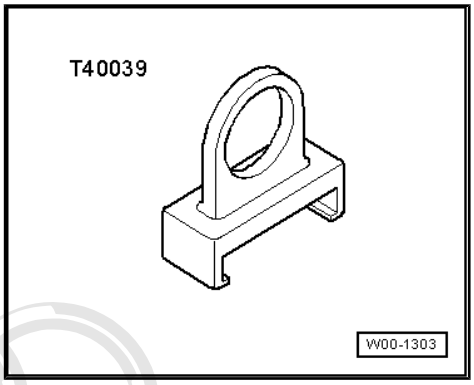

Protected by copyright. Copying for private or commercial purposes, in part or in whole, is not permitted unless authorised by AUDI AG. AUDI AG does not guarantee or accept any liability with respect to the correctness of information in this document. Copyright by AUDI AG.

Removing

– Pull off rear engine cover -arrows- ...

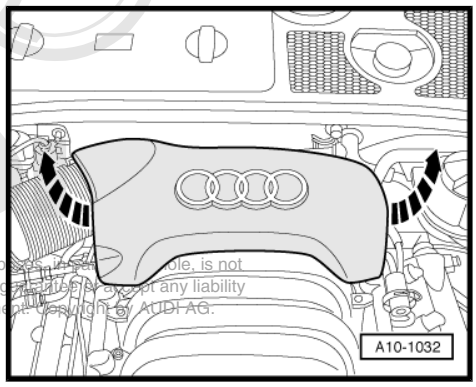

– ... as well as front engine cover -arrows-.

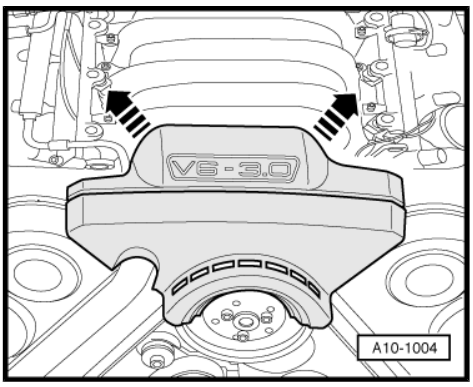

– Unbolt toothed belt guard (front left) from cylinder head cover -arrows-.

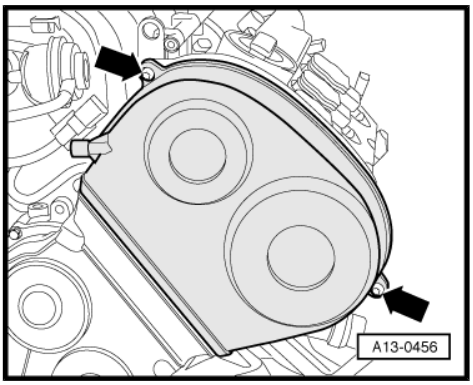

– Unscrew bolts -4- and -5-.
– Unplug electrical connectors -1 ... 3- and -6-.

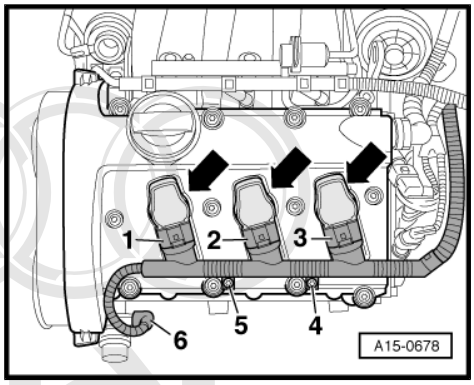

– Detach crankcase breather hose -arrow-.
– Unscrew bolts for cylinder head cover (left-side) in the sequence -12 ... 1- and remove cylinder head cover.

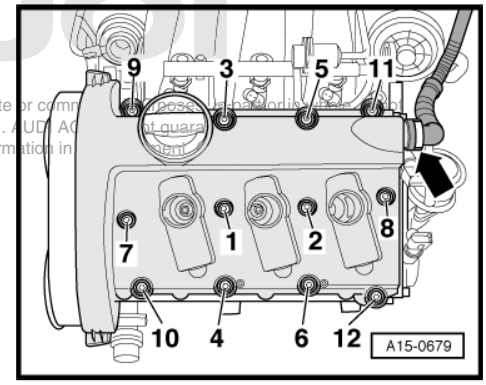

Protected by copyright. Copying for private or comm
permitted unless authorised by AUDI AG. AUDI AG
with respect to the correctness of information in

Installing

Installation is carried out in the reverse order; note the following:

Note

- *Renew self-locking bolts.*
- *Renew gasket for cylinder head cover if damaged.*

– Tighten bolts for cylinder head cover in the sequence -1 ... 12-.

Tightening torques

Component	Nm
Cylinder head cover to cylinder head	10
Toothed belt guard (front) to cylinder head cover	6 [12)]

12) Renew bolts.

2.3 Removing and installing cylinder head cover (right-side)

Special tools and workshop equipment required

- Puller -T40039-

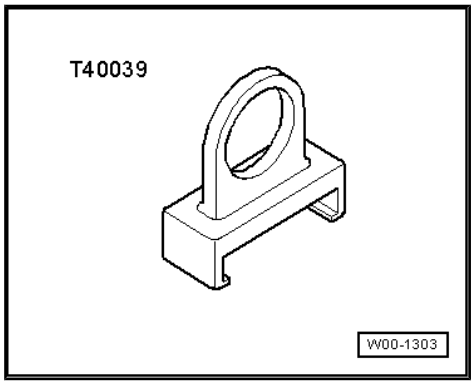

Removing

– Activate jacking mode ⇒ Running gear, front-wheel drive and four-wheel drive; Rep. Gr. 43 ; Operating the air suspension .

– Pull off rear engine cover -arrows-.

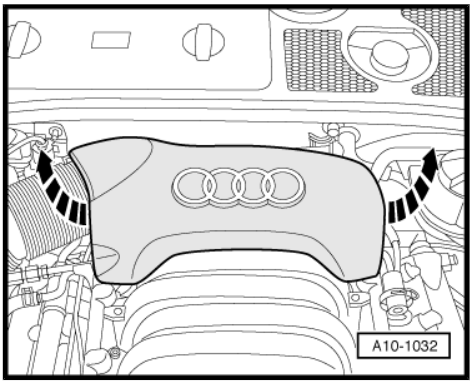

– Vehicles with auxiliary heater: remove bolts -arrows- securing exhaust pipe for auxiliary/additional heater to noise insulation.

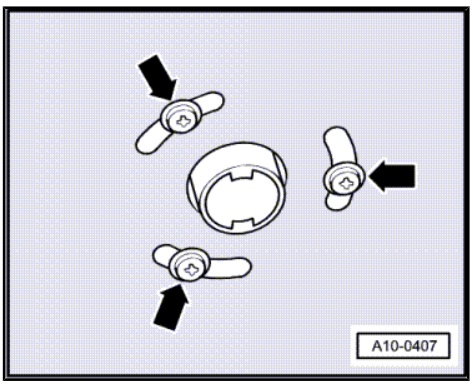

– Loosen quick release fasteners -1- and remove front noise insulation.

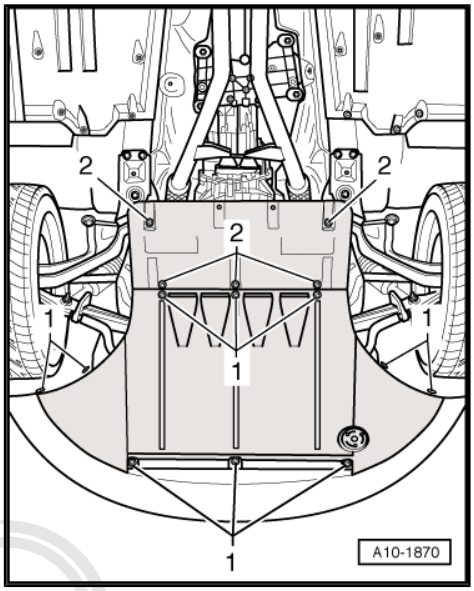

– Detach hose -arrow- to secondary air pump at bottom of air cleaner housing.

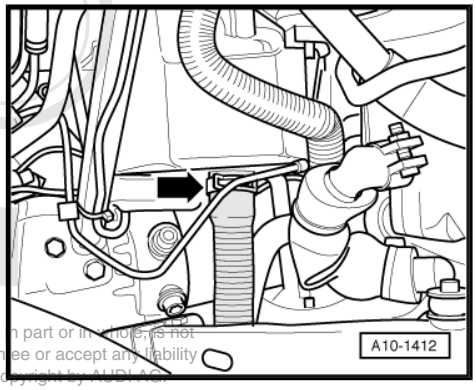

Protected by copyright. Copying for private or commercial purposes, in part or in whole, is not permitted unless authorised by AUDI AG. AUDI AG does not guarantee or accept any liability with respect to the correctness of information in this document. Copyright by AUDI AG.

– Remove cover for suspension turret (right-side); to do so, detach spreader clips -1- and unscrew nut -2-.
– Pull cover out of retainers -arrows-.

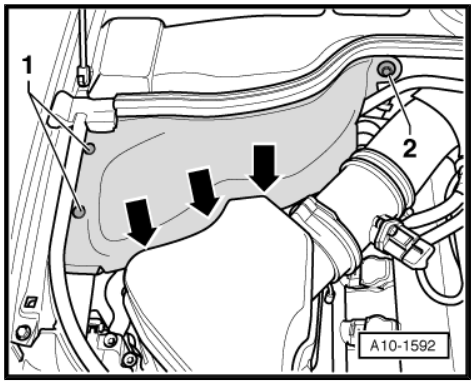

– Detach electrical connector -1-.
– Detach air intake hose -2- at air cleaner housing.
– Unscrew bolts -arrows- and remove air cleaner housing.

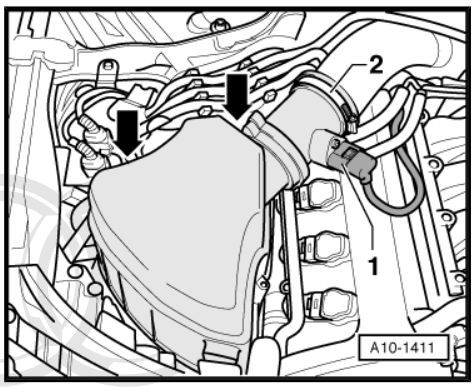

– Unscrew bolts -1- and -3-.
– Disconnect hose -4- at pipe for secondary air.
– Pull guide tube -2- for oil dipstick upwards out of top section of sump and fold forwards.

Protected by copyright. Copying for private or commercial purposes, in part or in whole is not permitted unless authorised by AUDI AG. AUDI AG does not guarantee or assume liability with respect to the correctness of information in this document. Copyright by AUDI AG.

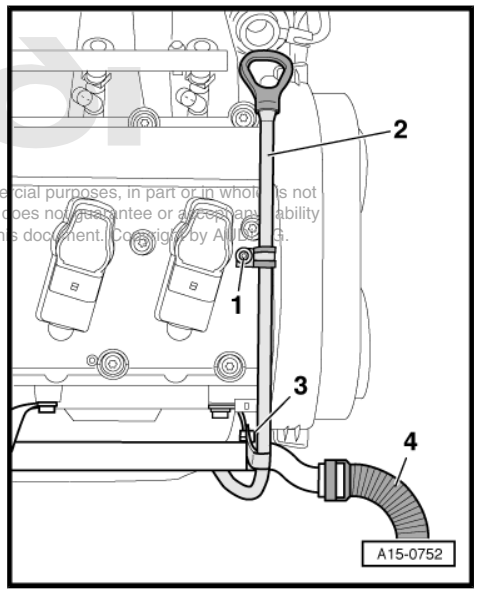

– Unscrew toothed belt guard (front right) from cylinder head cover -arrows-.

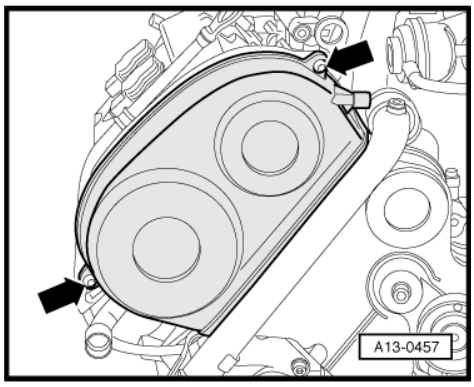

– Unscrew bolts -5- and -6-.
– Unplug electrical connectors -1 … 4-.
– Pull out ignition coils -arrows- using puller -T40039- .

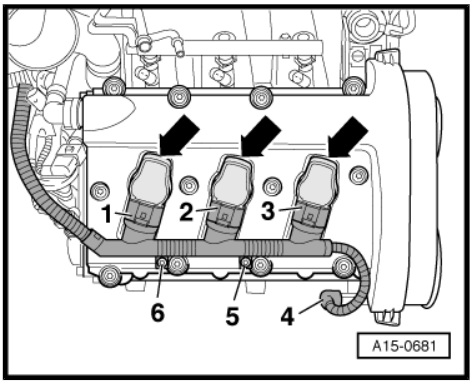

– Detach crankcase breather hose -arrow-.
– Unscrew bolts for cylinder head cover (right-side) in the sequence -12 ... 1- and remove cylinder head cover.

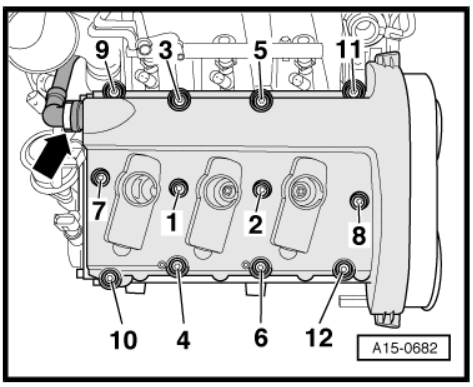

Installing

Installation is carried out in the reverse order; note the following:

Note

- *Renew self-locking bolts.*
- *Renew gasket for cylinder head cover if damaged.*

– Tighten bolts for cylinder head cover in the sequence -1 ... 12-.
– Renew O-ring on guide tube for oil dipstick and insert guide tube into hole in top section of sump.
– Deactivate jacking mode ⇒ Running gear, front-wheel drive and four-wheel drive; Rep. Gr. 43 ; Operating the air suspension .

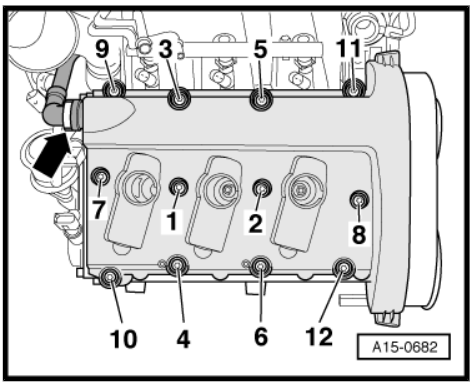

Tightening torques

Component	Nm
Cylinder head cover to cylinder head	10
Toothed belt guard (front) to cylinder head cover	6 13)
Guide tube for dipstick to cylinder head	23

13) Renew bolts

2.4 Removing cylinder head (left-side)

Special tools and workshop equipment required

- Special wrench (Polydrive) -T10070-

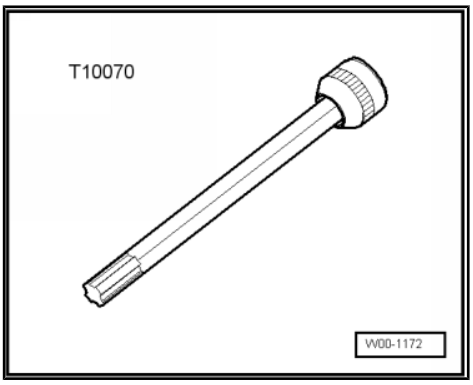

Protected by copyright. Copying for private or commercial purposes, in part or in whole, is not permitted unless authorised by AUDI AG. AUDI AG does not guarantee or accept any liability with respect to the correctness of information in this document. Copyright by AUDI AG.

Procedure

- Engine in vehicle.

Note

All cable ties which are released or cut open when removing must be fitted in the same position when installing.

– Activate jacking mode ⇒ Running gear, front-wheel drive and four-wheel drive; Rep. Gr. 43 ; Operating the air suspension .

– Remove intake manifold ⇒ page 94 .

– Detach coolant hose -arrow- at expansion tank.

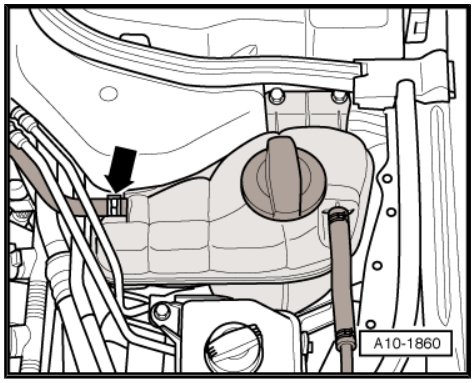

– Unplug electrical connectors -1- and -2- at Hall senders -G163- and -G301- .

– Unbolt earth wire at rear of cylinder head.

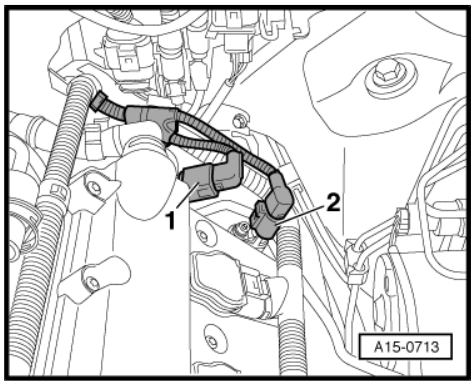

– Remove toothed belt ⇒ page 62 .

– Remove camshaft sprockets on cylinder head (left-side).

– Unscrew bolts -1- and -2- and remove toothed belt guard (rear left).

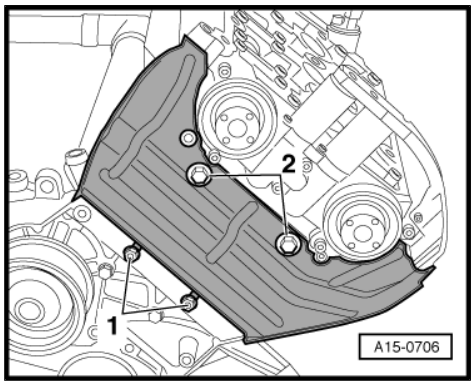

Protected by copyright. Copying for private or commercial purposes, in part or in whole, is not permitted unless authorised by AUDI AG. AUDI AG does not guarantee or accept any liability with respect to the correctness of information in this document. Copyright by AUDI AG.

– Unbolt front coolant pipe from cylinder head -arrows-.

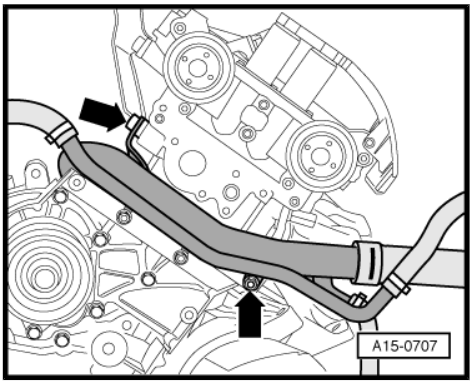

– Detach vacuum hose -arrow- going to brake servo at non-return valve.

Protected by copyright. Copying for private or commercial purposes, in part or in whole, is not permitted unless authorised by AUDI AG. AUDI AG does not guarantee or accept any liability with respect to the correctness of information in this document. Copyright by AUDI AG.

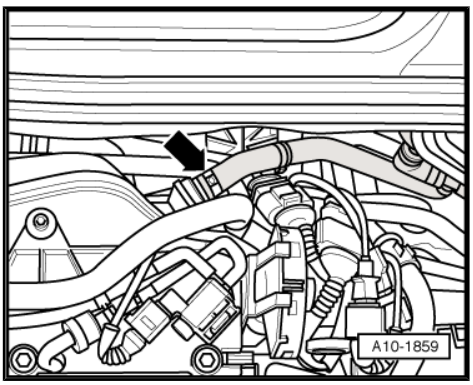

– Unscrew bracket for connectors (rear centre) from bulkhead.
– Remove electrical connectors -1 ... 5- from bracket.

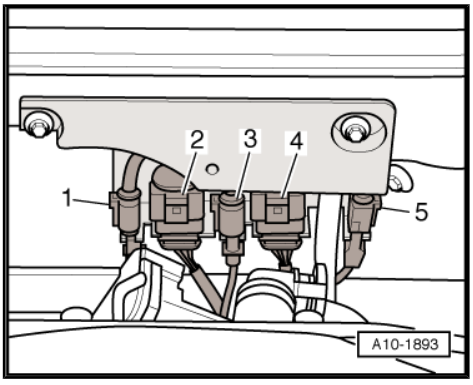

– Unscrew bolts -1- on flange of combination valve for secondary air.
– Detach rear coolant pipe from cylinder head by unscrewing bolts -2- and -3-.

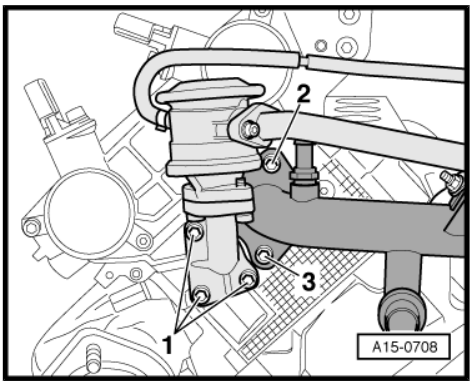

Note

- *The coolant pipe and combination valve do not have to be removed.*
- *Shown from rear with engine removed for illustration purposes.*

– Unscrew nut -2- (accessible from above) securing front exhaust pipe to exhaust manifold (left-side).

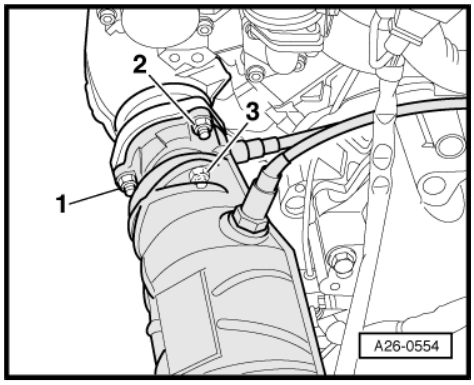

Note

Shown from rear with engine removed for illustration purposes.

– Loosen the clamp (left-side) -1-.

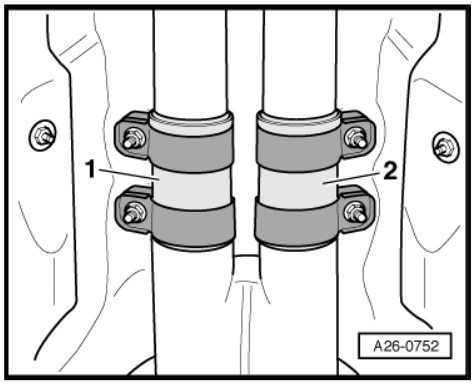

– Unscrew nut -left arrow- at mounting bracket for front exhaust pipe (left-side).

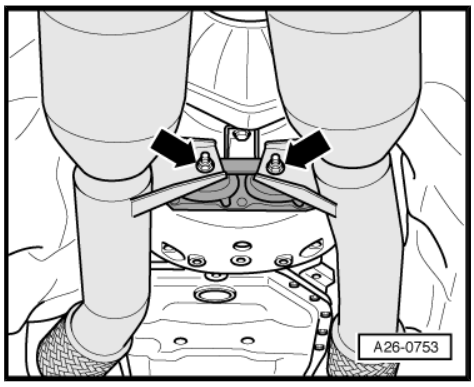

– Unbolt heat shield -1- for drive shaft (left-side) from gearbox.

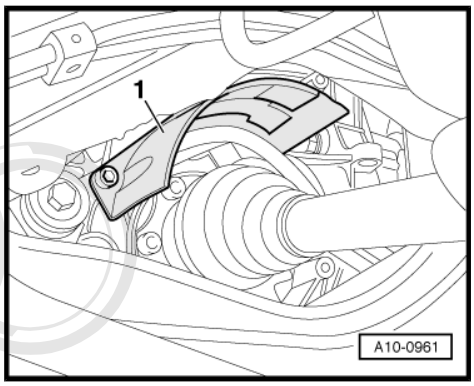

Protected by copyright. Copying for private or commercial purposes, in part or in whole, is not permitted unless authorised by AUDI AG. AUDI AG does not guarantee or accept any liability with respect to the correctness of information in this document. Copyright by AUDI AG.

– Remove bolt -1- on bracket (left-side) for exhaust system.

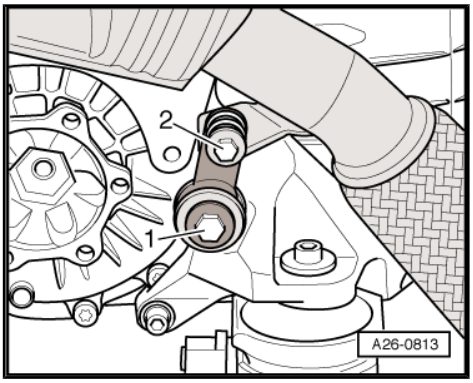

Note

Ignore item marked -2-.

– Remove nuts -1- and -3- (accessible from below) securing front exhaust pipe to exhaust manifold (left-side).

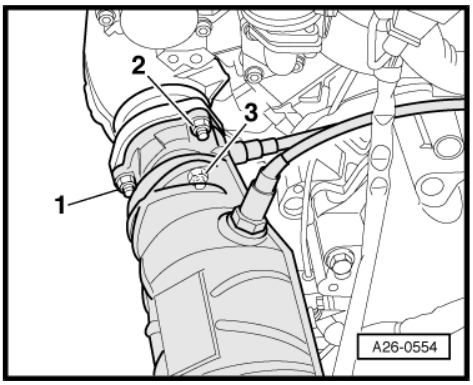

Note

Shown in illustration with engine removed.

– Detach front exhaust pipe from exhaust manifold.

– Loosen cylinder head bolts in the sequence -1 ... 8-.
– Carefully remove the cylinder head.

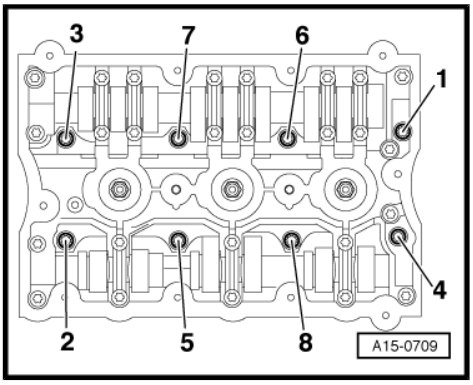

2.5 Removing cylinder head (right-side)

Special tools and workshop equipment required

♦ Special wrench (Polydrive) -T10070-

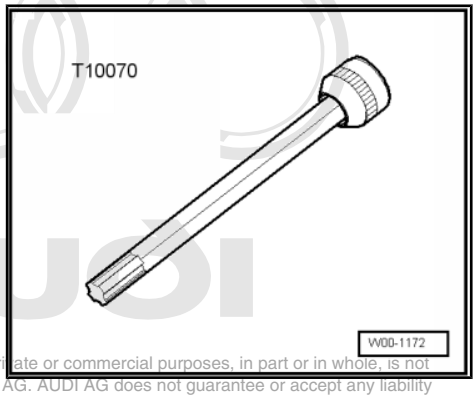

Protected by copyright. Copying for private or commercial purposes, in part or in whole, is not permitted unless authorised by AUDI AG. AUDI AG does not guarantee or accept any liability with respect to the correctness of information in this document. Copyright by AUDI AG.

Procedure

• Engine in vehicle.

Note

All cable ties which are released or cut open when removing must be fitted in the same position when installing.

– Activate jacking mode ⇒ Running gear, front-wheel drive and four-wheel drive; Rep. Gr. 43 ; Operating the air suspension .

WARNING

Observe notes on procedure for disconnecting the battery ⇒ Electrical system; Rep. Gr. 27 .

– Switch off ignition.

– Remove luggage compartment side trim cover (right-side) -arrows-.

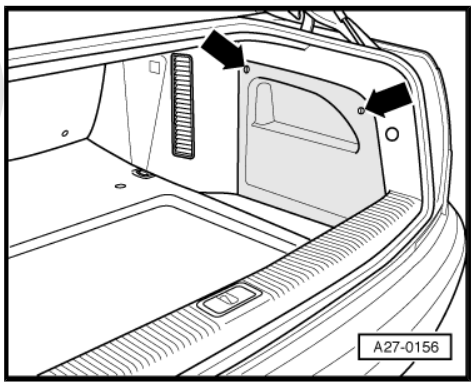

Protected by copyright. Copying for private or commercial purposes, in part or in whole, is not permitted unless authorised by AUDI AG. AUDI AG does not guarantee or accept any liability with respect to the correctness of information in this document. Copyright by AUDI AG.

– Remove cover -1- over battery.

Note

Ignore item marked -2-.

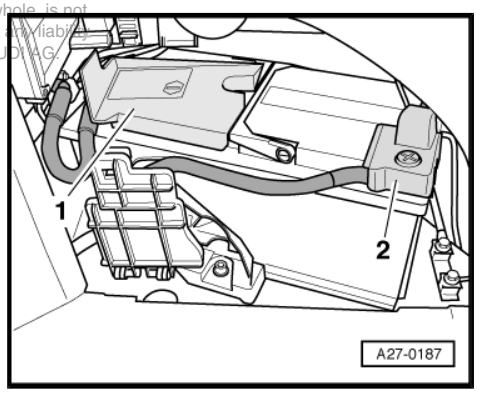

– Disconnect earth cable -arrow- at battery.

– Remove intake manifold ⇒ page 94 .

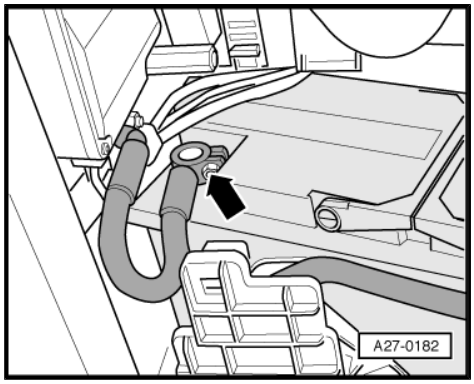

Note

Lay a cloth under the hydraulic pressure pipe to catch any escaping hydraulic fluid.

– Remove pressure pipe for power-assisted steering at vane pump, cylinder head and rear coolant pipe -arrows-.

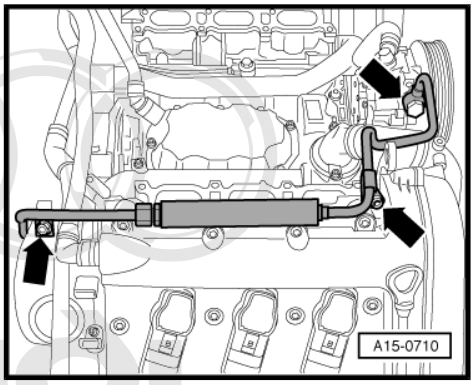

– Unplug electrical connectors -1- and -2- at Hall senders -G40- and -G300- .

Protected by copyright. Copying for private or commercial purposes, in part or in whole, is not permitted unless authorised by AUDI AG. AUDI AG does not guarantee or accept any liability with respect to the correctness of information in this document. Copyright by AUDI AG.

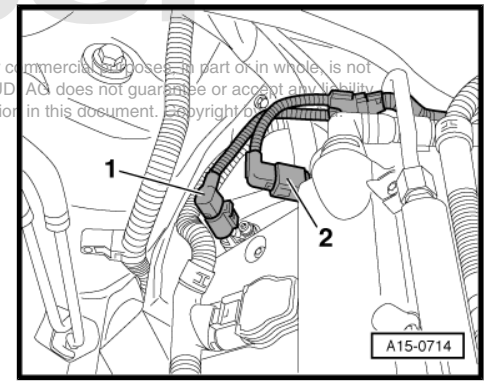

– Remove toothed belt ⇒ page 62 .
– Remove camshaft sprockets on cylinder head (right-side).
– Remove bolts -1- and take off bracket with idler roller.
– Remove bolts -2- and take off toothed belt guard (rear right).

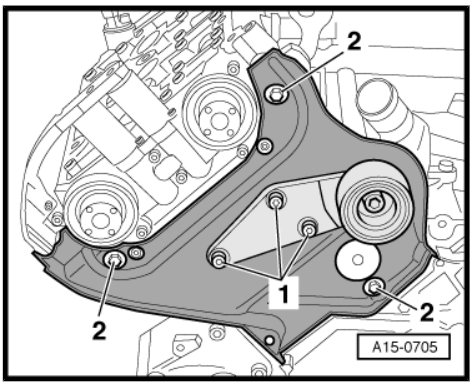

– Unscrew bolts -3- and detach combination valve for secondary air system (together with flange) from cylinder head.
– Unscrew bolts -1- and -2- and detach rear coolant pipe from cylinder head.

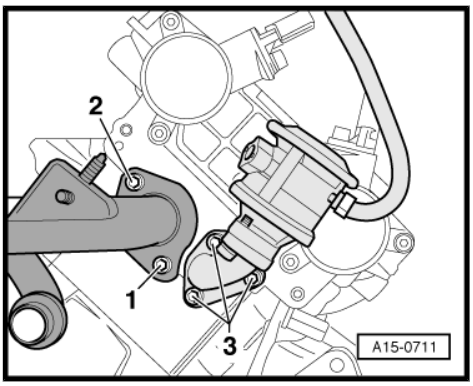

Note

- *The coolant pipe remains installed.*
- *Shown from rear with engine removed for illustration purposes.*

– Unscrew nut -2- (accessible from above) securing front exhaust pipe to exhaust manifold (right-side).

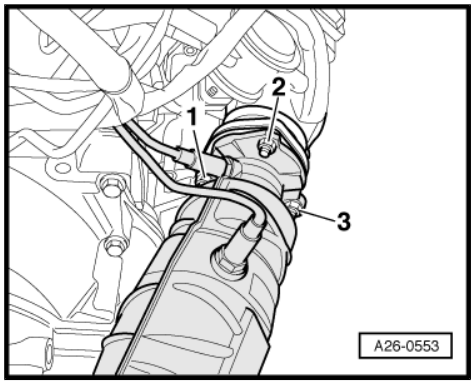

Note

Shown from rear with engine removed for illustration purposes.

– Loosen the clamp (right-side) -2-.

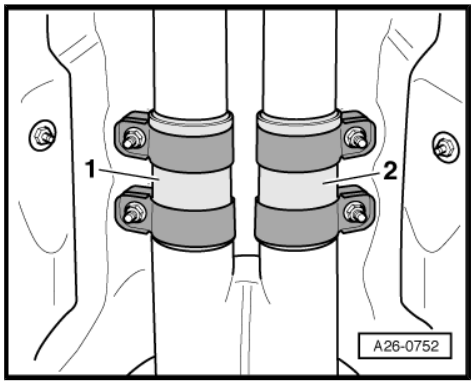

– Unscrew nut -right arrow- at mounting bracket for front exhaust pipe (right-side).

Protected by copyright. Copying for private or commercial purposes, in part or in whole, is not permitted unless authorised by AUDI AG. AUDI AG does not guarantee or accept any liability with respect to the correctness of information in this document. Copyright by AUDI AG.

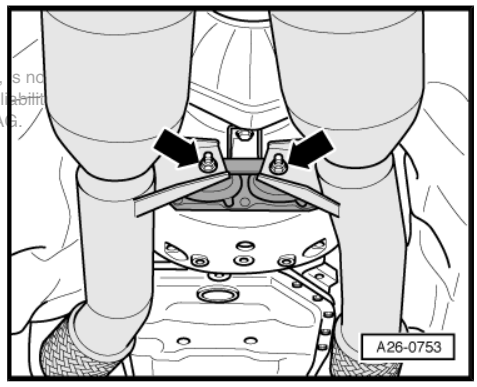

– Unbolt heat shield -1- for drive shaft (right-side) from gearbox.

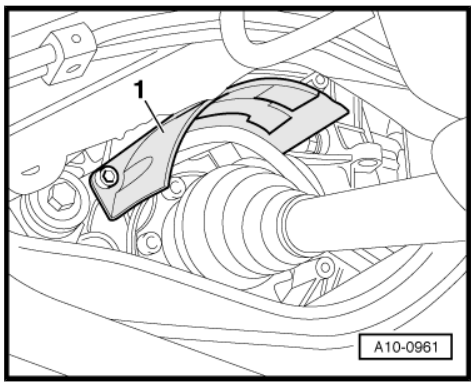

– Remove bolt -1- on bracket (right-side) for exhaust system.

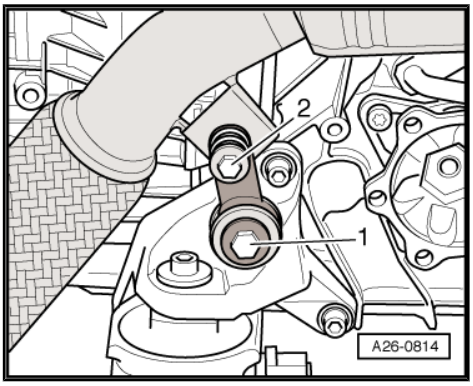

Note

Ignore item marked -2-.

– Remove nuts -1- and -3- (accessible from below) securing front exhaust pipe to exhaust manifold (right-side).

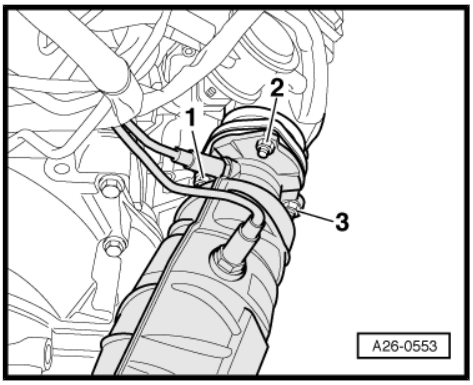

Note

Illustration shows engine removed.

– Detach front exhaust pipe from exhaust manifold.

– Loosen cylinder head bolts in the sequence -1 ... 8-.
– Carefully remove the cylinder head.

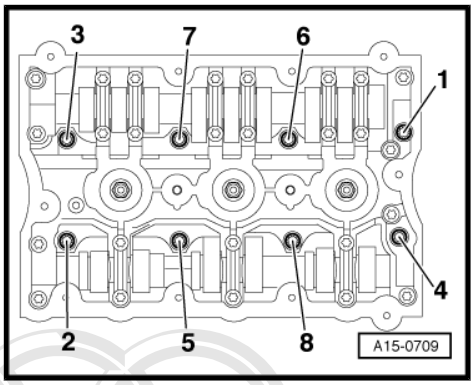

Protected by copyright. Copying for private or commercial purposes, in part or in whole, is not permitted unless authorised by AUDI AG. AUDI AG does not guarantee or accept any liability with respect to the correctness of information in this document. Copyright by AUDI AG.

2.6 Installing cylinder head

Note

- *Renew the cylinder head bolts.*
- *Renew self-locking nuts and bolts when performing assembly work.*
- *Renew bolts which are tightened to a specified angle as well as oil seals and gaskets.*
- *If repairing, carefully remove any remaining gasket material from the cylinder head and cylinder block. Ensure that no long scores or scratches are made on the surfaces.*
- *Carefully remove any remaining emery and abrasive material.*
- *No oil or coolant must be allowed to remain in the blind holes for the cylinder head bolts in the cylinder block.*
- *Do not remove new cylinder head gasket from packaging until it is ready to be fitted.*
- *Handle gasket very carefully. Damage to the silicone coating or the indented area will lead to leaks.*
- *Position cylinder head gasket on dowel sleeves. The word "oben" (top) or the Part No. should face towards cylinder head.*
- *Cylinder heads which have cracks between the valve seats or between a valve seat insert and the spark plug thread can be re-installed without reducing service life, provided the cracks are only slight and do not exceed a maximum of 0.3 mm in width, and no more than the first 4 turns of the spark plug threads are cracked.*
- *When renewing a cylinder head, a sealing cap must be driven into the front of the cylinder head* *⇒ page 74* *.*
- *When installing an exchange cylinder head with the camshafts fitted, the contact surfaces between bucket tappet and cam running surface must be oiled after installation of the cylinder head.*
- *The plastic protectors fitted to protect the open valves should not be removed until the cylinder head is ready to be fitted.*
- *Secure all hose connections with the correct type of hose clips (same as original equipment) ⇒ Parts catalogue.*

The reproduction, distribution and utilization of this document for commercial purposes, in part or in whole, is not permitted unless authorised by AUDI AG. AUDI AG does not guarantee or accept any liability with respect to the correctness of information in this document. Copyright by AUDI AG.

– Before installing cylinder head, set crankshaft and camshafts to "TDC":

• The camshaft clamp -T40030- must be attached to both cylinder heads.

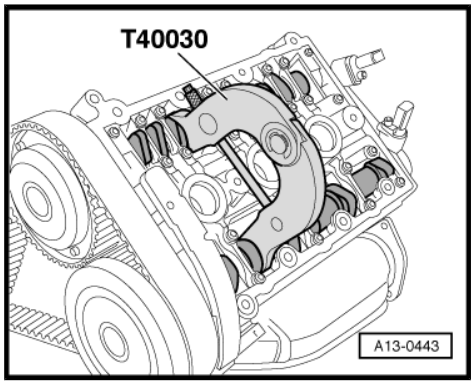

- The locking pin -T40026- must be screwed into the crankshaft.

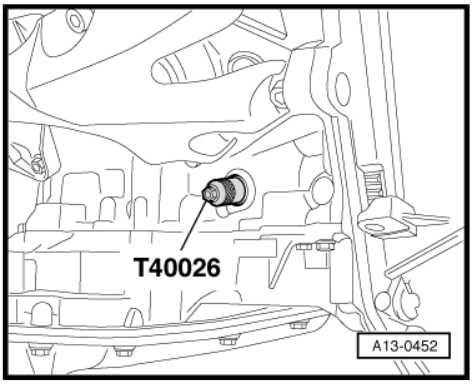

– Fit new cylinder head gasket.
- Note position of centering pins -arrows- in cylinder block.
- Check installation position of cylinder head gasket: the word “oben” (top) or the Part No. should face towards the cylinder head.

– Fit the cylinder head.

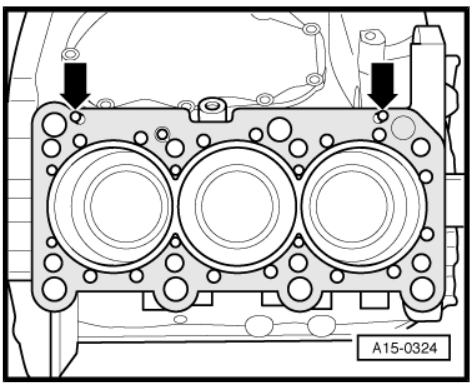

Protected by copyright. Copying for private or commercial purposes, in part or in whole, is not permitted unless authorised by AUDI AG. AUDI AG does not guarantee or accept any liability with respect to the correctness of information in this document. Copyright by AUDI AG.

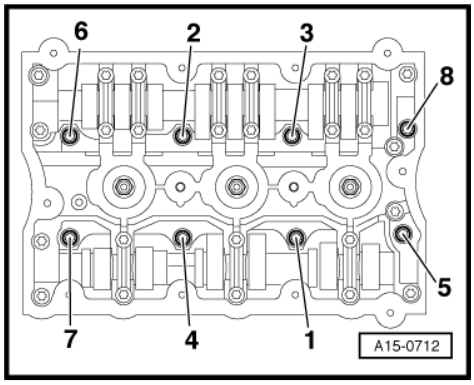

– Insert new cylinder head bolts and tighten finger-tight.
– Insert new cylinder head bolts and tighten hand-tight.
– Tighten cylinder head in 3 stages in the following sequence:

Stage	Tightening
I	– Tighten with torque wrench to 40 Nm.
II	– Turn 90° (1/4 turn) further using a rigid wrench.
III	– Turn 90° (1/4 turn) further using a rigid wrench.

Note

It is not necessary to retighten cylinder head bolts.

– Install toothed belt (adjust valve timing) ⇒ page 69 .

Note

After working on the valve gear, turn the engine carefully at least 2 rotations by hand to ensure that none of the valves make contact when the starter is operated.

– Install front exhaust pipe together with catalytic converter: left-side ⇒ page 199 , right-side ⇒ page 205 .
– Align exhaust system free of stress ⇒ page 215 .
– Screw in centering pin for intake manifold.
– Install intake manifold ⇒ page 94 .
– Connect battery. Procedures required ⇒ Electrical system; Rep. Gr. 27 .
– Fill cooling system with fresh coolant ⇒ page 165 .
– Top up power steering fluid and bleed steering system: ⇒ Running gear, front-wheel drive and four-wheel drive; Rep. Gr. 48

Copyright by AUDI AG. Reproduction for private or commercial purposes, in part or in whole, is not permitted unless authorised by AUDI AG. AUDI AG does not guarantee or accept any liability with respect to the correctness and completeness of information contained in this document. Copyright by AUDI AG.

Tightening torques

Component		Nm
Coolant pipe (rear) to cylinder head		10
Combination valve to cylinder head		10
Toothed belt guard (rear) to cylinder head/ cylinder block		10 [14)]
Bracket for idler roller to cylinder head		10 [14)]
Coolant pipe (front)	M 6	10
to cylinder head	M 8	23
Pressure pipe for power-assisted steering to hydraulic pump		47
Pressure pipe for power-assisted steering to cylinder head		10
Pressure pipe for power-assisted steering to coolant pipe (rear)		20

14) Renew bolts.

2.7 Checking compression

Special tools and workshop equipment required

- ♦ Spark plug socket -3122 B-
- ♦ Compression tester - V.A.G 1763-
- ♦ Puller -T40039-

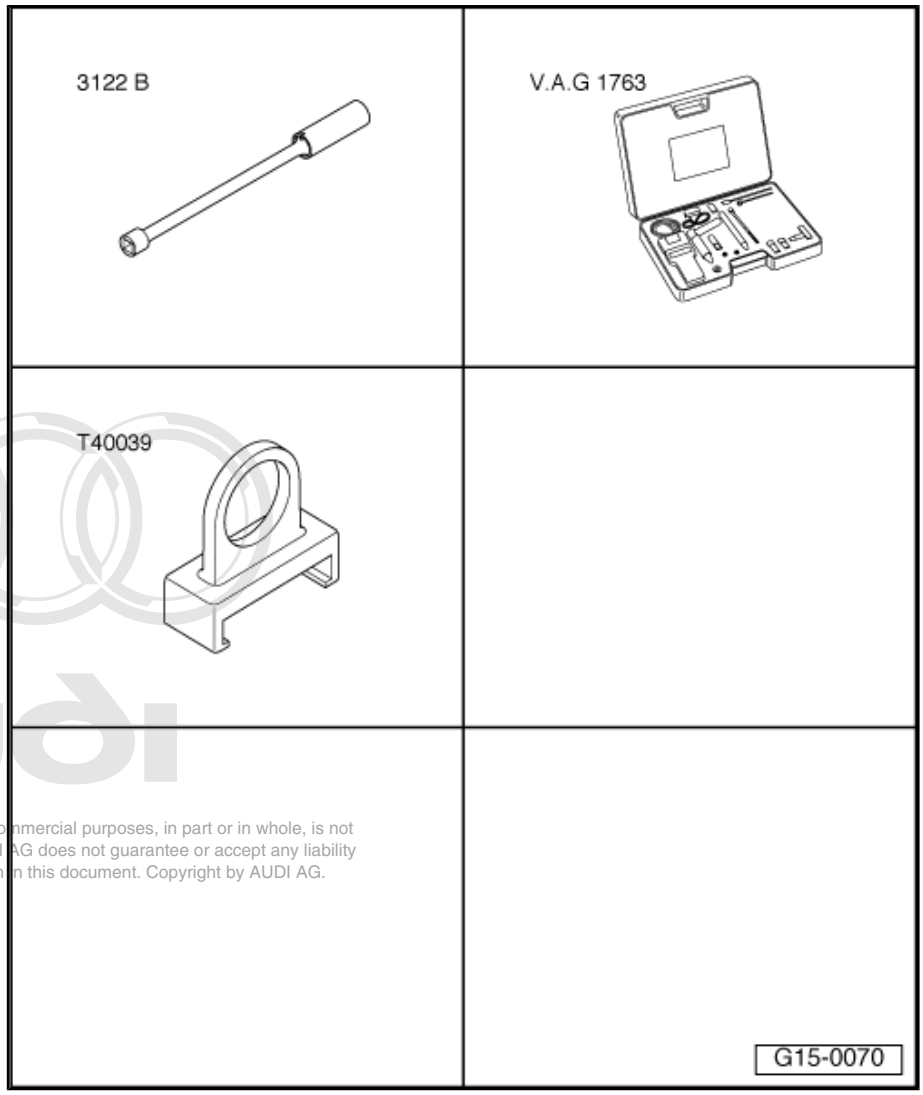

Protected by copyright. Copying for private or commercial purposes, in part or in whole, is not permitted unless authorised by AUDI AG. AUDI AG does not guarantee or accept any liability with respect to the correctness of information in this document. Copyright by AUDI AG.

Procedure

- Engine oil temperature at least 30 °C.
- Battery voltage at least 12.5 V.

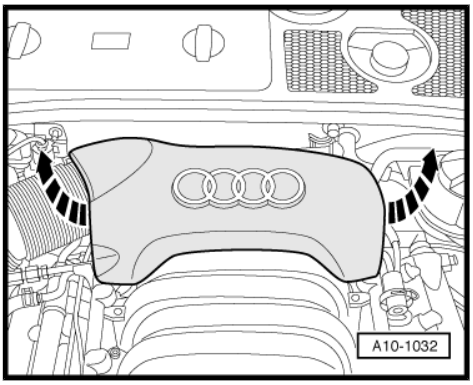

– Pull off rear engine cover -arrows-.

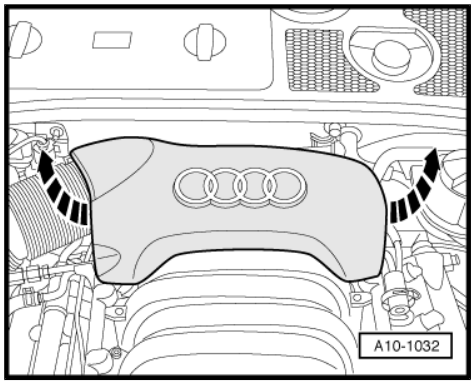

– Detach wheel housing liner (front right) at the front.
– Detach hose -arrow- to secondary air pump at bottom of air cleaner housing.

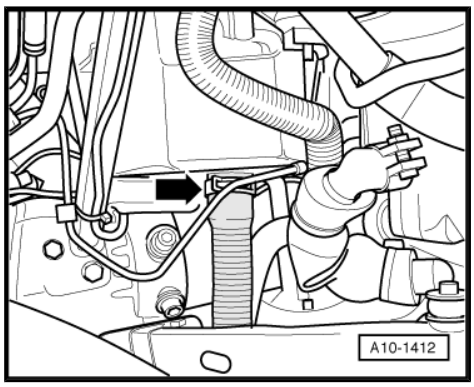

– Remove cover for suspension turret (right-side); to do so, detach spreader clips -1- and unscrew nut -2-.
– Pull cover out of retainers -arrows-.

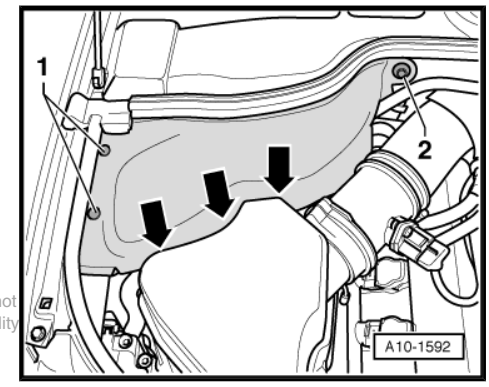

Protected by copyright. Copying for private or commercial purposes, in part or in whole, is not permitted unless authorised by AUDI AG. AUDI AG does not guarantee or accept any liability with respect to the correctness of information in this document. Copyright by AUDI AG.

– Detach electrical connector -1-.
– Detach air intake hose -2- at air cleaner housing.
– Unscrew bolts -arrows- and remove air cleaner housing.

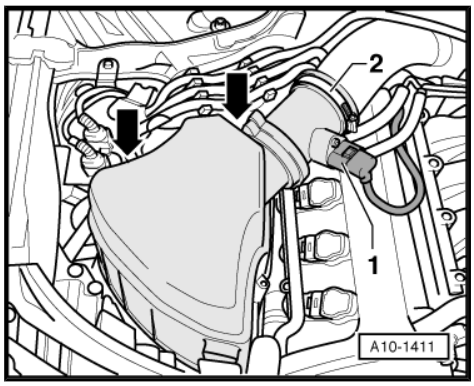

– Unscrew bolts -4- and -5- at cylinder head (left-side).
– Unplug electrical connectors -1 ... 3- and -6-.
– Pull out ignition coils -arrows-.

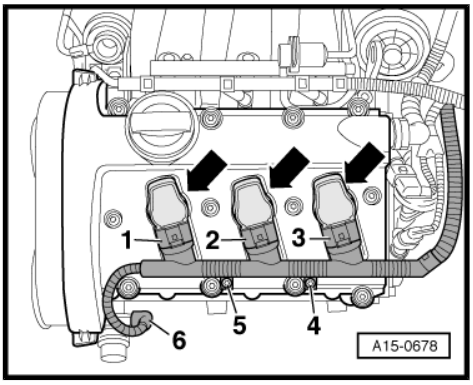

– Unscrew bolts -5- and -6- at cylinder head (right-side).
– Unplug electrical connectors -1 … 4-.
– Pull out ignition coils -arrows- using puller -T40039- .
– Remove spark plugs with spark plug spanner -3122 B- .

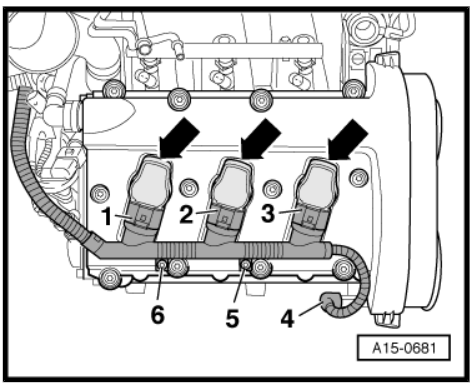

– Unplug all electrical connectors at all injectors; to do so, release connectors on underside -arrow-.
– Test the compression pressure with the compression tester -V.A.G 1763- .

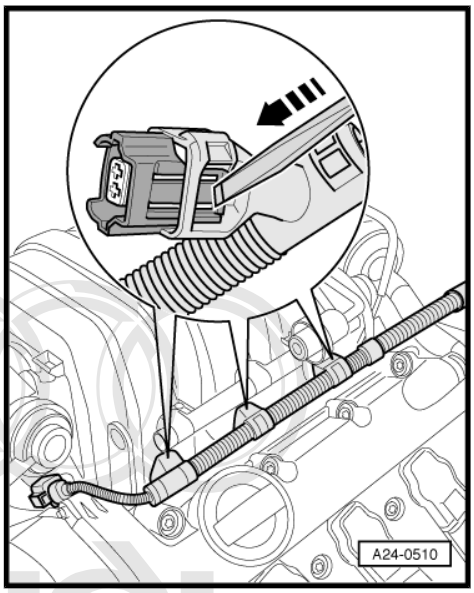

Note

Using the compression tester ⇒ Operating instructions .

– Have a 2nd mechanic press down the accelerator pedal completely and simultaneously operate the starter until the pressure no longer increases on the tester display.

Compression pressure:

New	Wear limit	Difference between cylinders
pressure in bar	**pressure in bar**	**pressure in bar**
10.0 … 14.0	9.0	max. 3.0

Assembly is carried out in the reverse order; note the following:

– Install spark plugs ⇒ Maintenance ; Booklet 402 .
– Interrogate and erase the fault memory for engine control unit, as faults are stored when the electrical connectors are unplugged.

For this purpose, use vehicle diagnostic, testing and information system -VAS 5051 A- .

Protected by copyright. Copying for private or commercial purposes, in part or in whole, is not permitted unless authorised by AUDI AG. AUDI AG does not guarantee or accept any liability with respect to the correctness of information in this document. Copyright by AUDI AG.

3 Intake manifold

3.1 Intake manifold - exploded view of components

1 - Intake manifold
- ❑ Removing and installing ⇒ page 94

2 - Resonator

3 - 10 Nm

4 - O-rings

5 - Fuel return pipe

6 - Fuel supply pipe
- ❑ Tighten union nut to 25 Nm.

7 - Bush

8 - 10 Nm

9 - Retaining plate for solenoid valves

10 - Fuel rail

11 - Air duct

12 - 10 Nm

13 - O-ring
- ❑ Renew

14 - 10 Nm

15 - 10 Nm
- ❑ Tighten in stages and in diagonal sequence

16 - Intake manifold gasket
- ❑ Renew

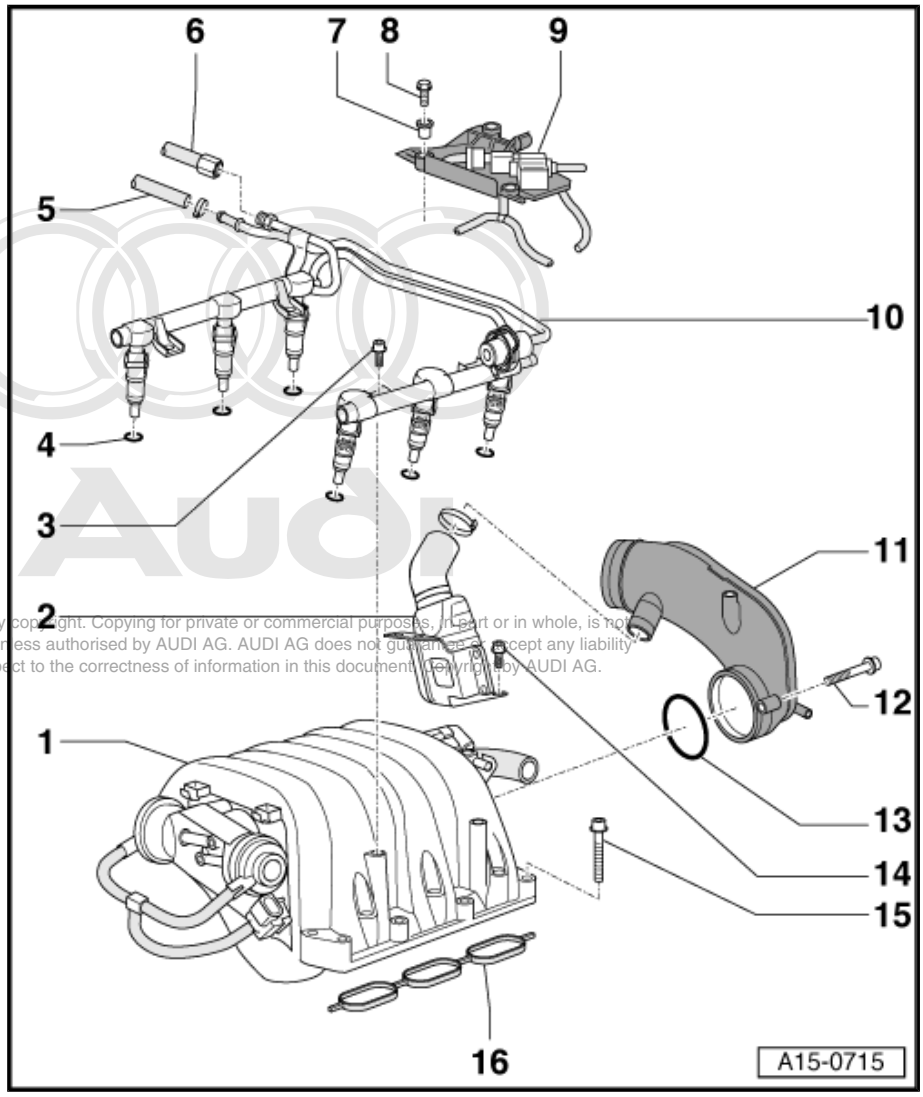

Protected by copyright. Copying for private or commercial purposes, in part or in whole, is not permitted unless authorised by AUDI AG. AUDI AG does not guarantee or accept any liability with respect to the correctness of information in this document. ©Copyright by AUDI AG.

3.2 Removing and installing intake manifold

Removing

Note

All cable ties which are released or cut open when removing must be fitted in the same position when installing.

– Drain off coolant ⇒ page 163 .

– Detach hose -arrow- to secondary air pump at bottom of air cleaner housing.

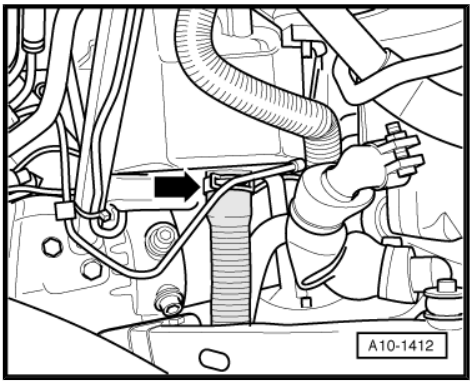

– Remove cover for suspension turret (right-side); to do so, detach spreader clips -1- and unscrew nut -2-.
– Pull cover out of retainers -arrows-.

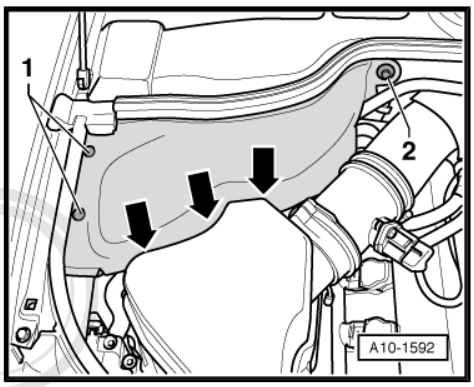

– Detach electrical connector -1-.
– Detach air intake hose -2- at air cleaner housing.
– Unscrew bolts -arrows- and remove air cleaner housing.

Protected by copyright. Copying for private or commercial purposes, in part or
permitted unless authorised by AUDI AG. AUDI AG does not guarantee or acce
with respect to the correctness of information in this document. Copyright

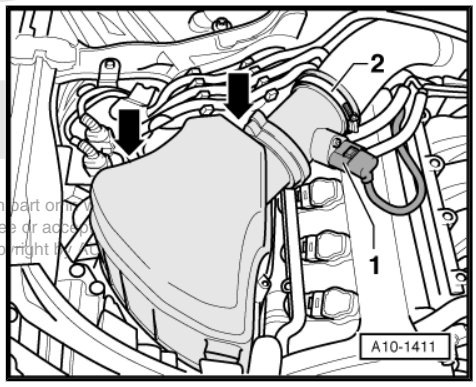

– Pull off rear engine cover -arrows- ...

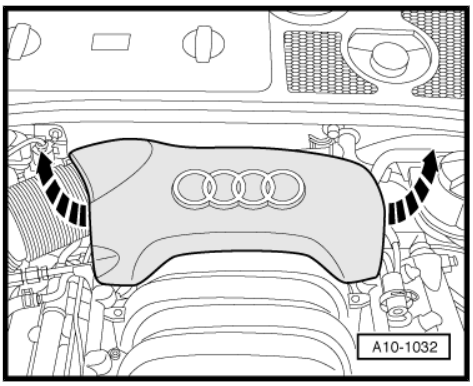

– ... as well as front engine cover -arrows-.

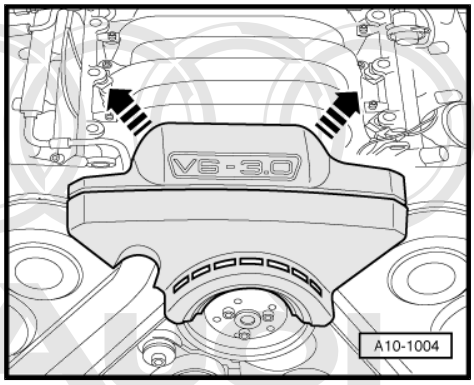

– Detach electrical connector -1-.
– Detach vacuum hose -2- from T piece.

Protected by copyright. Copying for private or commercial purposes, in part or in whole, is not permitted unless authorised by AUDI AG. AUDI AG does not guarantee or accept any liability with respect to the correctness of information in this document. Copyright by AUDI AG.

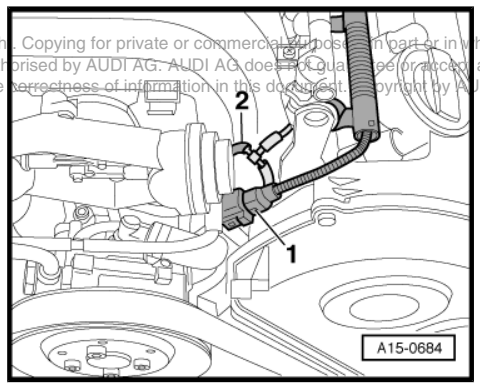

– Detach vacuum hoses -2- and -3- at intake manifold change-over valve -N156- .
– Detach vacuum hose -6- from non-return valve.
– Detach electrical connector -5-.
– Move the crankcase breather hose -arrow- clear.
– Unscrew and remove bolts -1-, -4- and -7- on retaining plate for solenoid valves.
– Detach retaining plate for solenoid valves from intake manifold.
– On underside of retaining plate, pull vacuum hose off T piece.

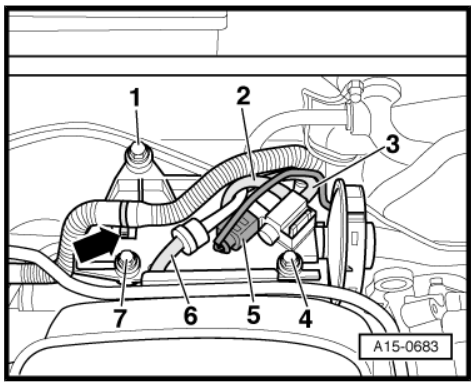

– Detach electrical connector -1- at throttle valve module - J338- .
– Disconnect vacuum hoses -2- and -3-.

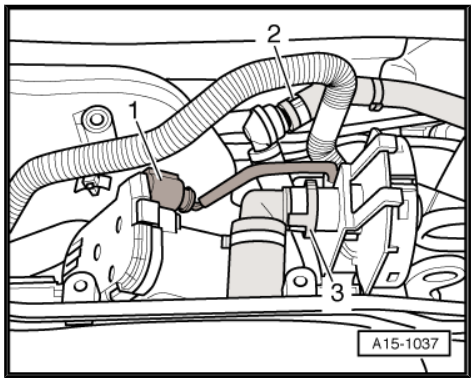

– Unplug electrical connectors at all injectors.
– Detach vacuum hose at fuel pressure regulator and unscrew securing bolts on fuel rail -arrows-.
– Pull fuel rail together with injectors off intake manifold (pull off evenly from the top) and place it on a clean cloth in the engine compartment.

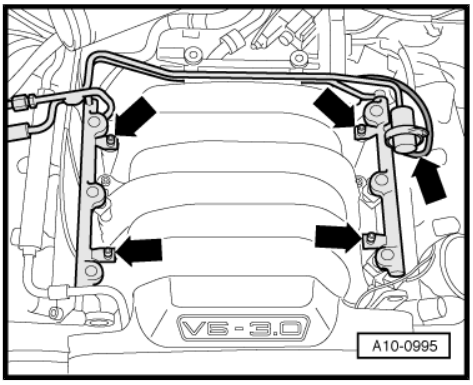

Note

Make sure the removed injectors do not become soiled.

– Pull hose -1- off air duct.
– Unscrew bolt -4- and pull air duct -2- off throttle valve module -J338- .
– If fitted, pull vacuum hose -3- off at lower part of air duct.

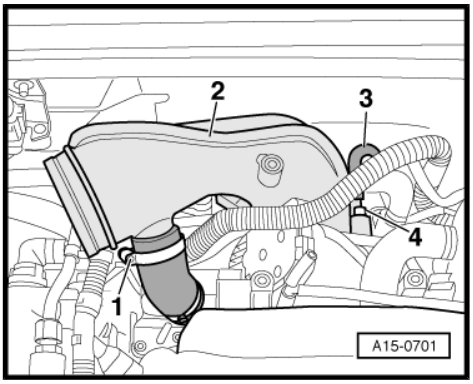

– On right side of engine, unscrew and remove bolts -arrows- at secondary air pipe.

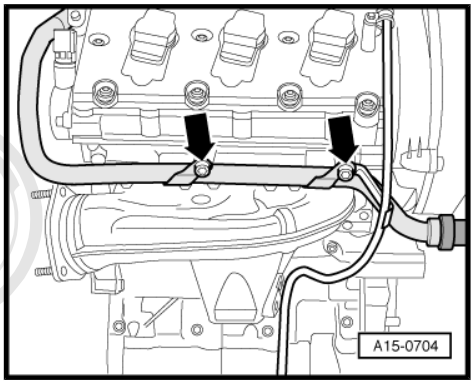

– Unscrew bolts -1- and -2- at secondary air pipes.
– Unscrew bolts -3- and -5- and remove resonator -4-.

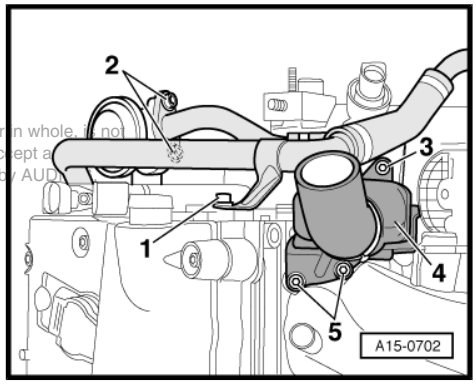

Protected by copyright. Copying for private or commercial purposes, in part or in whole, is not permitted unless authorised by AUDI AG. AUDI AG does not guarantee or accept any liability with respect to the correctness of information in this document. Copyright by AUDI AG.

– Detach vacuum hose -1- leading to solenoid valve 1 for activated charcoal filter system -N80- .

– Detach coolant hoses -2- and -3-.

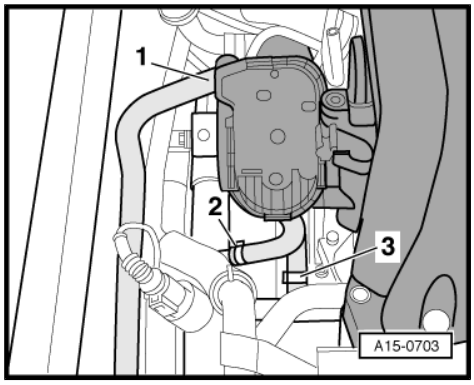

– Unscrew and remove intake manifold -arrows-.

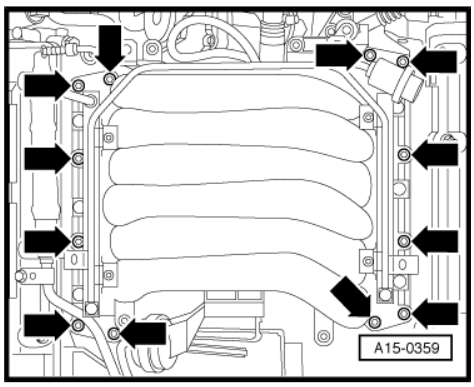

Note

Seal intake ports on cylinder heads with clean cloths.

Installing

Installation is carried out in the reverse order; note the following:

Note

- *Secure all hose connections with the correct type of hose clips (same as original equipment) ⇒ Parts catalogue.*
- *Always renew seals and gaskets.*
- *See the notes regarding installation of the fuel rail ⇒ Motronic injection and ignition system (6-cyl.); Rep. Gr. 24 .*

– Tighten bolts on intake manifold in stages and in diagonal sequence -arrows-.

– Fill cooling system ⇒ page 165 .

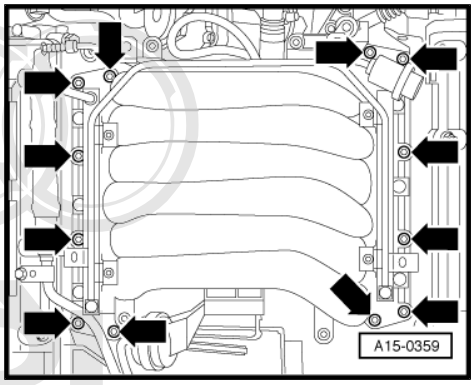

Tightening torques

Component		Nm
Intake manifold to cylinder head		10
Resonator to coolant pipe / to cylinder head		10
Secondary air pipe	M 6	10
to cylinder head	M 8	23
Secondary air pipe to combination valve for secondary air		10
Air duct to intake manifold		10
Retaining plate for solenoid valves to intake manifold / air duct		10

Protected by copyright. Copying for private or commercial purposes, in part or in whole, is not permitted unless authorised by AUDI AG. AUDI AG does not guarantee or accept any liability with respect to the correctness of information in this document. Copyright by AUDI AG.

4 Servicing valve gear

Note

- *Cylinder heads which have cracks between the valve seats or between valve seat inserts and the spark plug thread can be used further without reducing service life, provided the cracks do not exceed a maximum of 0.3 mm in width, or when no more than the first 4 turns of the spark plug threads are cracked.*
- *Engine is not to be started for approx. 30 minutes after installing camshafts. Hydraulic valve compensation elements have to settle (otherwise valves will strike pistons).*
- *After working on the valve gear, turn the engine carefully at least 2 rotations by hand to ensure that none of the valves make contact when the starter is operated.*
- *The following illustration shows the left-side cylinder head.*

4.1 Valve gear - exploded view of components

1 - 10 Nm

2 - Oil seals

- ❑ Renew ⇒ page 103

3 - Housing for solenoid valves for camshaft adjustment

4 - Gasket

- ❑ Renew

5 - Exhaust camshaft

- ❑ Checking axial clearance ⇒ page 103
- ❑ Removing and installing ⇒ page 105
- ❑ Check radial clearance with Plastigage (bucket tappet removed)
- ❑ Radial clearance: wear limit: 0.1 mm
- ❑ Runout: max. 0.01 mm

6 - Piston rings

- ❑ For camshaft adjuster
- ❑ Hook ends of piston rings together ⇒ page 101

7 - Inlet camshaft

- ❑ Checking axial clearance ⇒ page 103
- ❑ Removing and installing ⇒ page 105
- ❑ Check radial clearance with Plastigage (bucket tappet removed)
- ❑ Radial clearance: wear limit: 0.1 mm
- ❑ Runout: max. 0.01 mm

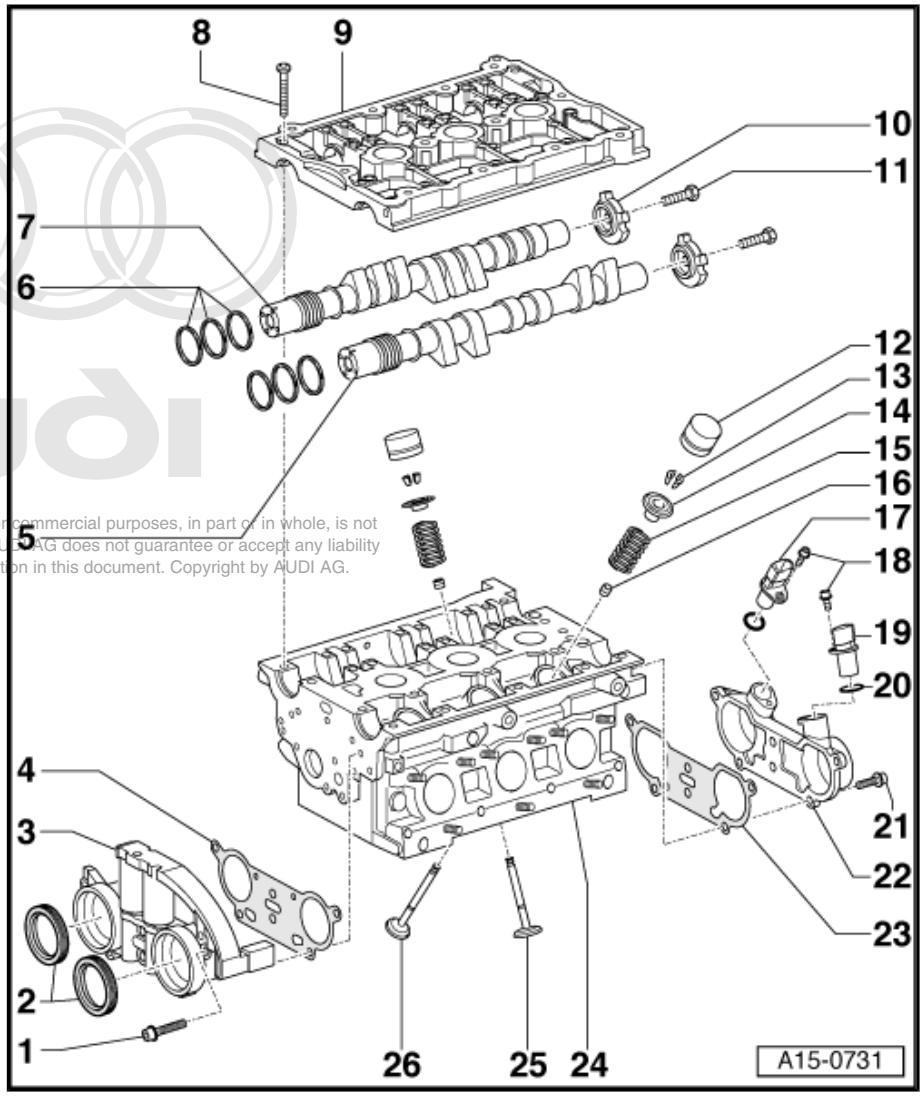

Protected by copyright. Copying for private or commercial purposes, in part or in whole, is not permitted unless authorised by AUDI AG. AUDI AG does not guarantee or accept any liability with respect to the correctness of information in this document. Copyright by AUDI AG.

8 - 10 Nm
- ❑ Tighten in several stages, working from inside to outside

9 - Ladder frame
- ❑ With integrated camshaft bearings
- ❑ Removing and installing: see Removing and installing camshafts and camshaft adjusters ⇒ page 105

10 - Rotor for Hall sender
- ❑ Note installation position (notch on camshaft)

11 - 23 Nm

12 - Hydraulic bucket tappets
- ❑ Checking ⇒ page 113
- ❑ Removing and installing: see Removing and installing camshafts and camshaft adjusters ⇒ page 105
- ❑ Do not interchange (mark allocation)
- ❑ Place down with contact surface facing downwards
- ❑ Check axial clearance of camshaft before installing ⇒ page 103
- ❑ Lubricate contact surface

13 - Valve cotters

14 - Valve springs

15 - Valve spring plate

16 - Valve stem oil seal
- ❑ Renewing with cylinder head installed ⇒ page 115
- ❑ Renewing with cylinder head removed ⇒ page 119

17 - Hall sender for inlet camshaft
- ❑ Cylinder bank 1 (right-side) Hall sender -G40-
- ❑ Cylinder bank 2 (left-side) Hall sender 2 -G163-

18 - 10 Nm

19 - Hall sender for exhaust camshaft
- ❑ Cylinder bank 1 (right-side) Hall sender 3 -G300-
- ❑ Cylinder bank 2 (left-side) Hall sender 4 -G301-

20 - O-ring
- ❑ Renew

21 - 10 Nm

22 - Hall sender housing

23 - Gasket
- ❑ Renew

24 - Cylinder head
- ❑ See note ⇒ page 99
- ❑ Checking valve guides, grinding-in valve seats ⇒ page 122
- ❑ Machining valve seats ⇒ page 123

Protected by copyright. Copying for private or commercial purposes, in part or in whole, is not permitted unless authorised by AUDI AG. AUDI AG does not guarantee or accept any liability with respect to the correctness of information in this document. Copyright by AUDI AG.

25 - Inlet valve
- ❑ Do not machine, only grinding-in is permitted
- ❑ Mark installation position for re-installation
- ❑ Valve dimensions ⇒ page 101
- ❑ Checking valve guides, grinding-in valve seats ⇒ page 122

26 - Exhaust valve
- ❑ Do not machine, only grinding-in is permitted
- ❑ Mark installation position for re-installation

- ❑ Valve dimensions ⇒ page 101
- ❑ Checking valve guides, grinding-in valve seats ⇒ page 122

Valve dimensions

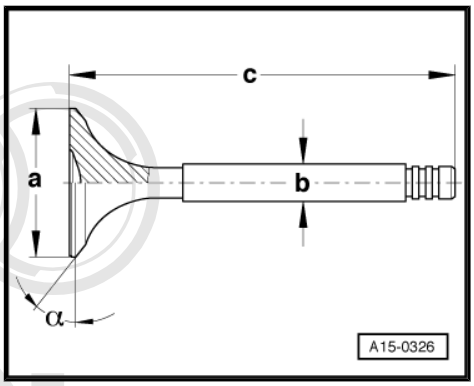

Note

Valves are not to be machined. Only grinding-in is permitted.

Dimension		Inlet valve	Exhaust valve
∅ a	mm	26.80 … 27.00	29.80 … 30.00
∅ b	mm	5.96 … 5.97	5.94 … 5.95
c	mm	104.84 … 105.34	103.64 … 104.14
α	∠°	45	45

WARNING

- *Care must be taken when disposing of old sodium-filled exhaust valves.*
- *The valves must be sawn in two with a metal saw between the centre of the stem and valve head. When doing so, the valves must not come into contact with water. After preparing the valves, throw a maximum of ten into a bucket of water. Then step away immediately, since a chemical reaction will occur in which the sodium filling burns.*
- *After performing these procedures the valves can be disposed of in the normal way.*

Protected by copyright. Copying for private or commercial purposes, in part or in whole, is not permitted unless authorised by AUDI AG. AUDI AG does not guarantee or accept any liability with respect to the correctness of information in this document. Copyright by AUDI AG.

Hooking together ends of piston rings

– Check that piston rings are installed on camshafts and that ends of piston rings are hooked together.

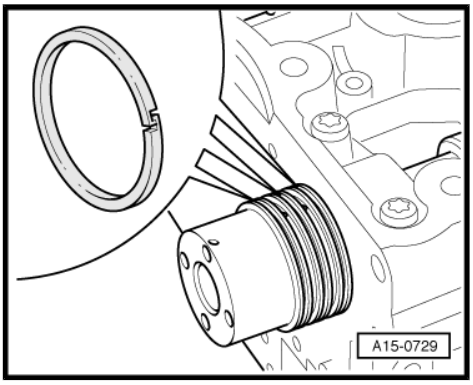

– If necessary, hook ends of piston rings -arrows- together as illustrated.

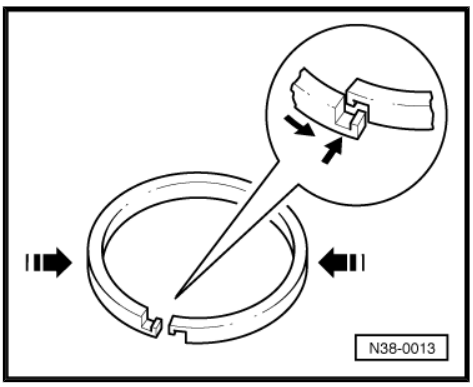

4.2 Camshaft adjustment - exploded view of components

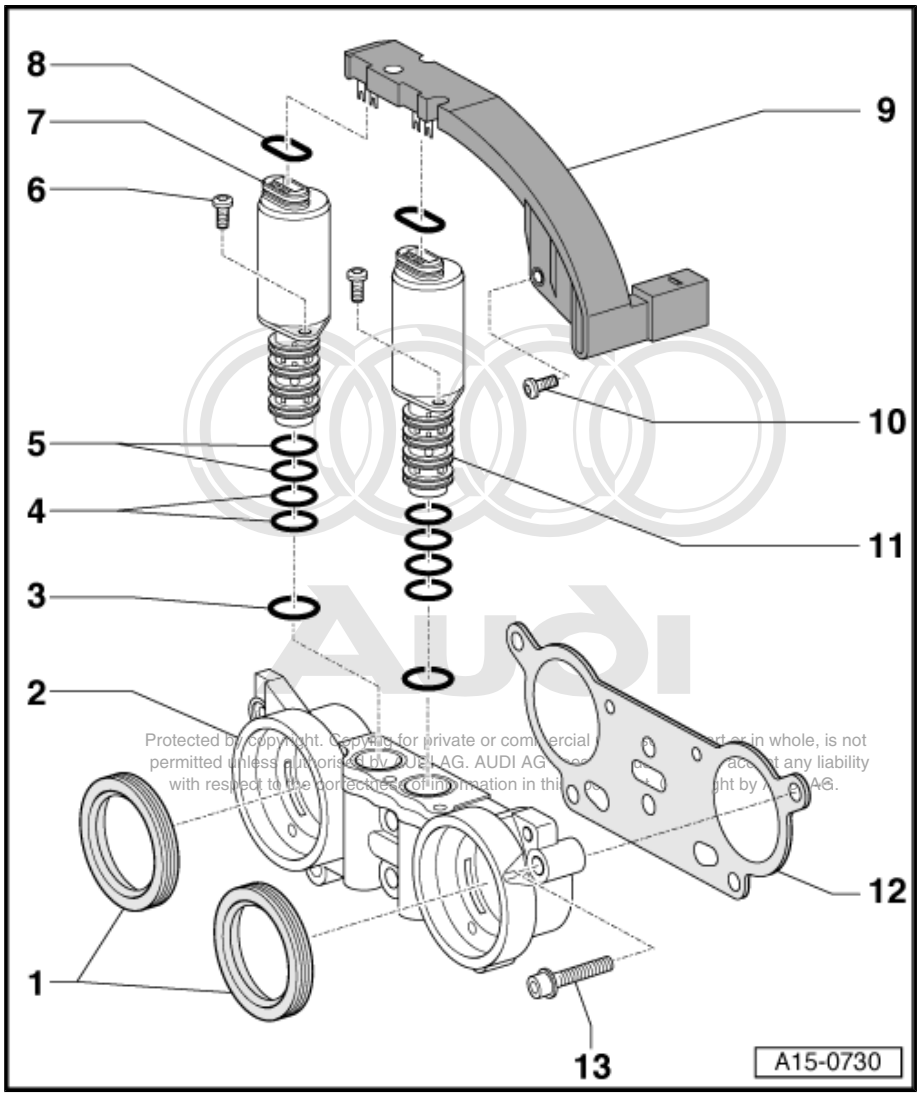

1 - Oil seals

- ❑ Renew ⇒ page 103

2 - Housing for solenoid valves for camshaft adjustment

3 - O-rings

- ❑ Green
- ❑ Between solenoid valves and solenoid valve housing
- ❑ Renew

4 - O-rings

- ❑ Black
- ❑ Renew

5 - O-rings

- ❑ Green
- ❑ Renew

6 - 4 Nm

7 - Camshaft control valve - inlet side

- ❑ Cylinder bank 1 (right-side) - camshaft control valve -N205-
- ❑ Cylinder bank 2 (left-side) - camshaft control valve 2 -N208-
- ❑ Do not install camshaft control valve for exhaust side on inlet side
- ❑ Note identification marking: “12. 100 338”
- ❑ Checking ⇒ page 129

8 - Seal

- ❑ Renew if damaged

9 - Connector adapter

- ❑ Adapter must be renewed if it has been disconnected from camshaft control valves
- ❑ Push carefully onto connectors on camshaft control valves until it engages

10 - 4 Nm

11 - Camshaft control valve - exhaust side

- ❑ Cylinder bank 1 (right-side) - camshaft control valve 1, exhaust -N318-
- ❑ Cylinder bank 2 (left-side) - camshaft control valve 2, exhaust -N319-
- ❑ Do not install camshaft control valve for inlet side on exhaust side
- ❑ Note identification marking: “12. 100 339”
- ❑ Checking ⇒ page 129

12 - Gasket

- ❑ Renew

13 - 10 Nm

4.3 Checking axial clearance of camshafts

Special tools and workshop equipment required

- Universal dial gauge bracket -VW 387-

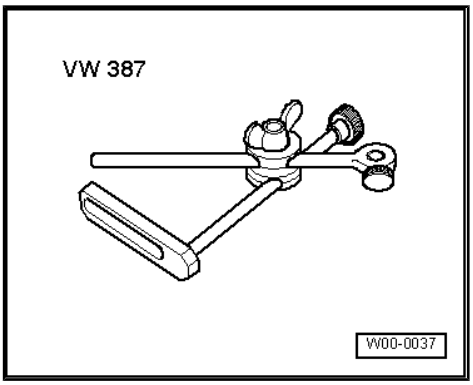

- Dial gauge

Protected by copyright. Copying for private or commercial purposes, in part or in whole, is not permitted unless authorised by AUDI AG. AUDI AG does not guarantee or accept any liability with respect to the correctness of information in this document. Copyright by AUDI AG.

Test sequence

– Remove the camshafts ⇒ page 105 .

– Remove bucket tappets.

– Fit camshafts in cylinder head and install ladder frame.

– Attach dial gauge bracket -VW 387- with dial gauge to cylinder head.

– Press the camshaft that is to be checked against the dial gauge by hand.

– Set dial gauge to “0”.

– Press crankshaft away from dial gauge and read off value:

- Radial clearance (new): 0.08 … 0.16 mm
- Radial clearance (wear limit): 0.20 mm.

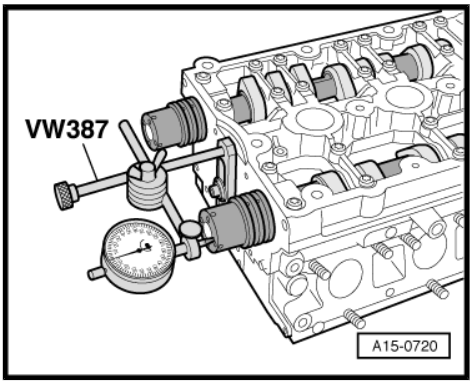

4.4 Renewing camshaft oil seals

Special tools and workshop equipment required

- Assembly tool -T10053-

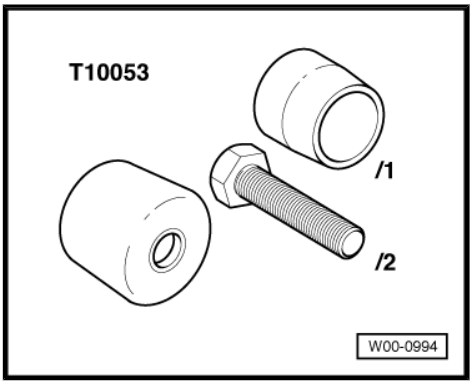

♦ Lever -T40017-

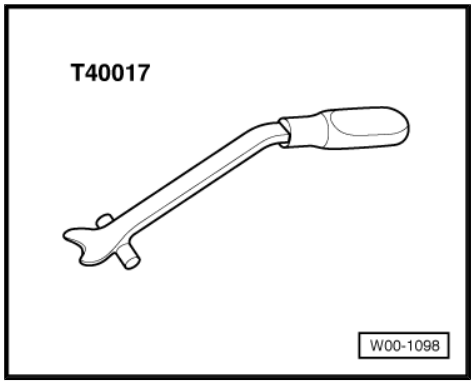

Removing

Note

If one of the oil seals is leaking, renew seals on both cylinder heads.

– Remove toothed belt ⇒ page 62 .
– Mark positions of camshaft sprockets for re-installation.
– Remove camshaft sprockets.
– Unscrew bolts -1 ... 6- and remove housing for camshaft control valves.

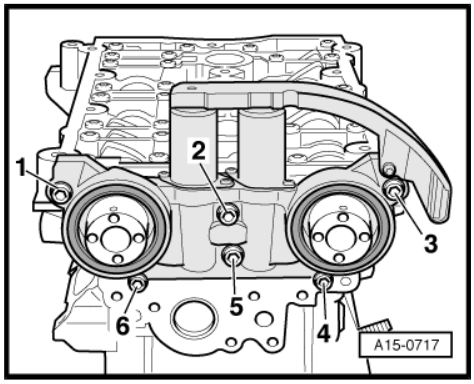

– Remove oil seals for camshafts using lever -T40017- .

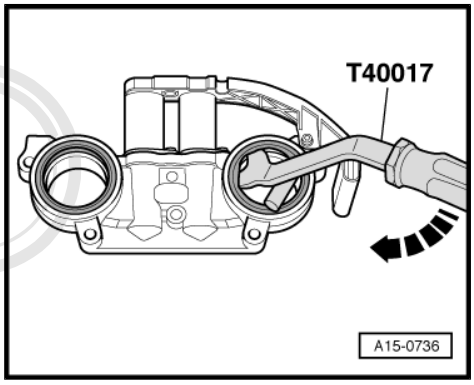

Protected by copyright. Copying for private or commercial purposes, in part or in whole, is not permitted unless authorised by AUDI AG. AUDI AG does not guarantee or accept any liability with respect to the correctness of information in this document. Copyright by AUDI AG.

Installing

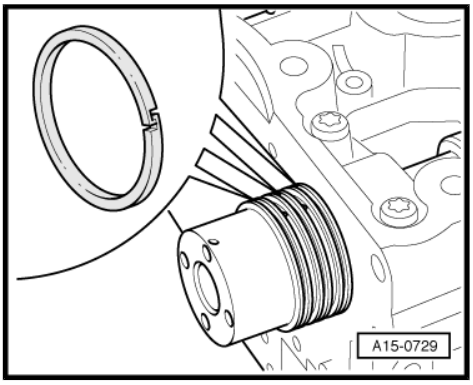

Note

Renew seals.

– Before installing housing for camshaft control valves, check that piston rings are installed on camshafts and that ends of piston rings are hooked together.

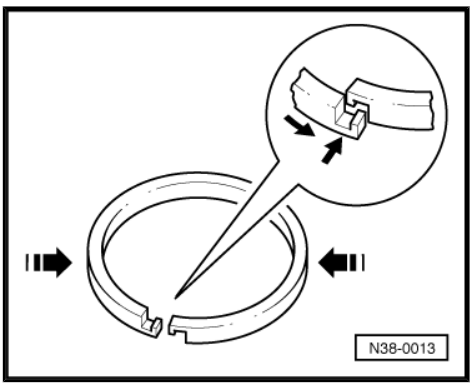

– If necessary, hook ends of piston rings -arrows- together as illustrated.

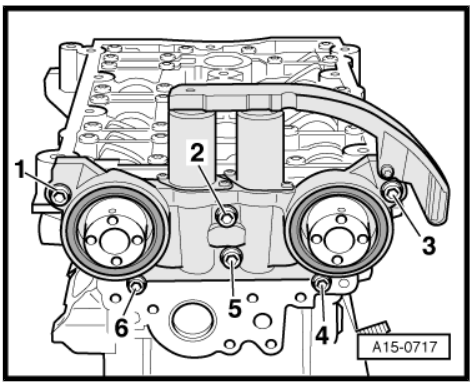

– Install housing for camshaft control valves and tighten bolts -1 ... 6-.

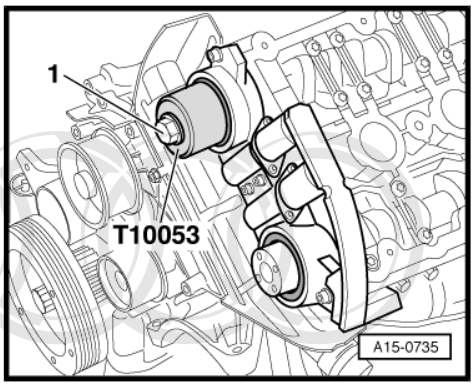

– Using the assembly tool -T10053- and bolt -1-, press the new oil seals for camshafts in until they are flush with the housing.

Perform further installation in reverse order, paying attention to the following:

– Install toothed belt (adjust valve timing) ⇒ page 69 .

4.5 Removing and installing camshafts and camshaft adjuster

Special tools and workshop equipment required

Protected by copyright. Copying for private or commercial purposes, in part or in whole, is not permitted unless authorised by AUDI AG. AUDI AG does not guarantee or accept any liability with respect to the correctness of information in this document. Copyright by AUDI AG.

- Puller -T10055-

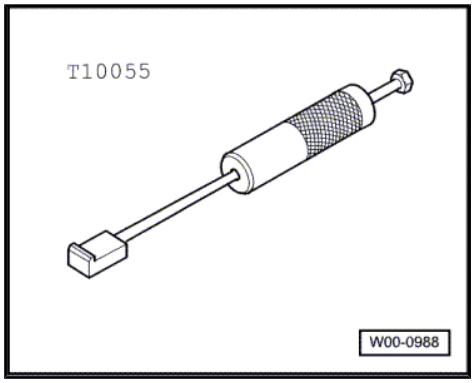

- Mandrel -T40029-

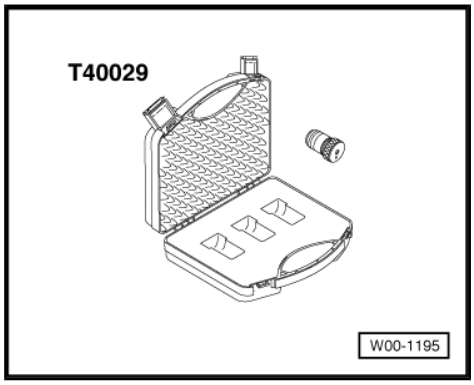

- Electric drill with plastic brush attachment
- Safety goggles
- Sealant ⇒ Parts catalogue

Removing

– Remove toothed belt ⇒ page 62 .

– Remove camshaft sprockets on respective cylinder head.

– Remove combination valve for secondary air system: left-side ⇒ page 235 , right-side ⇒ page 236 .

Cylinder head (right-side):

– Unplug electrical connectors -1- and -2- at Hall senders -G40- and -G300- .

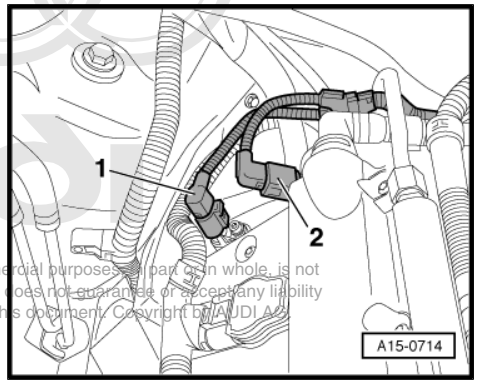

Protected by copyright. Copying for private or commercial purposes, in part or in whole, is not permitted unless authorised by AUDI AG. AUDI AG does not guarantee or accept any liability with respect to the correctness of information in this document. Copyright by AUDI AG.

– Remove bolts -1- and take off bracket with idler roller.
– Remove bolts -2- and take off toothed belt guard (rear right).

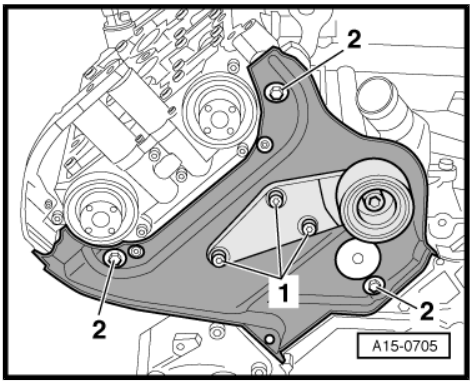

Cylinder head (left-side):

– Remove bolts -1- and -2- and take off toothed belt guard (rear left).

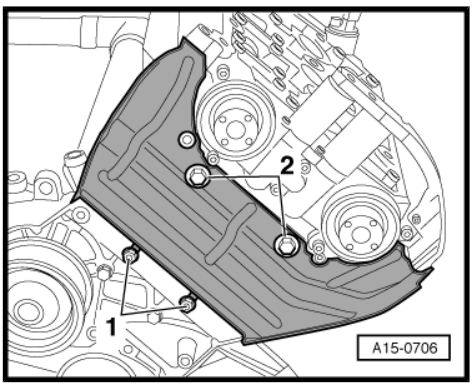

Continuation for both sides:

– Remove counterhold -T40030- from camshafts.
– Unscrew bolts -1 ... 6- and remove housing for camshaft control valves.

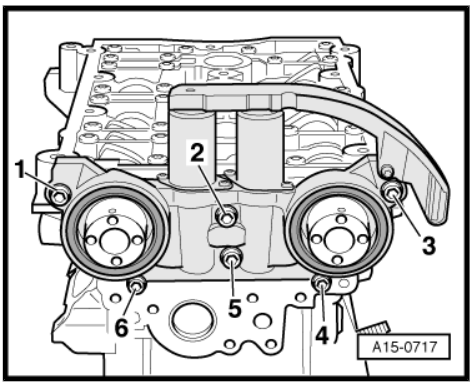

– Unscrew bolts -1 ... 6- and remove housing for Hall sender.

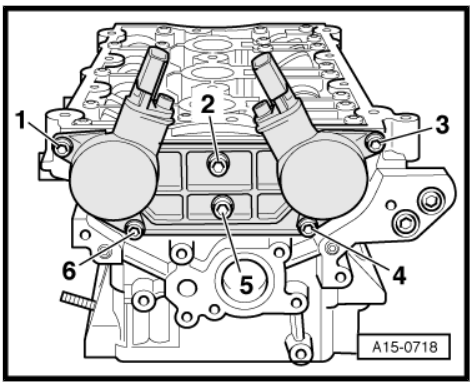

Protected by copyright. Copying for private or commercial purposes, in part or in whole, is not permitted unless authorised by AUDI AG. AUDI AG does not guarantee or accept any liability with respect to the correctness of information in this document. Copyright by AUDI AG.

– Loosen bolts on ladder frame in the sequence shown by the numbers and then following the arrows.

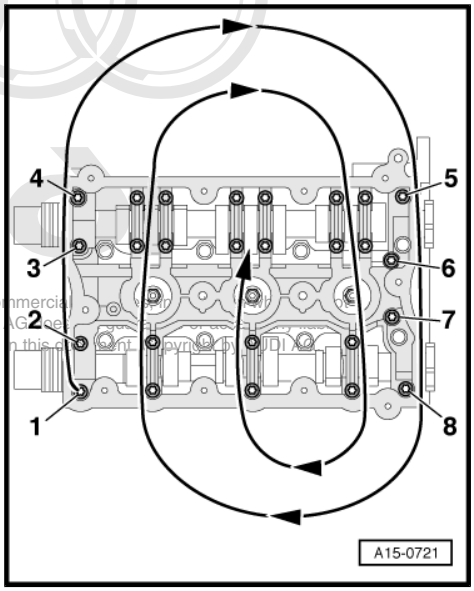

Protected by copyright. Copying for private or commercial purposes, in part or in whole, is not permitted unless authorised by AUDI AG. AUDI AG does not guarantee or assume any liability with respect to the correctness of information in this document. Copyright by AUDI AG.

– Press off ladder frame using M6 bolts -arrows-.

– Carefully remove ladder frame.

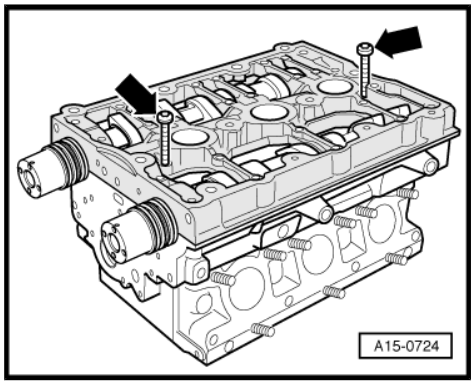

Installing

Note

Renew seals and gaskets.

• Crankshaft locked in position with locking pin -T40026- .

WARNING

Wear safety goggles.

– Remove remaining sealant from cylinder head and ladder frame using rotating plastic brush or similar.

– Clean sealing surfaces; they must be free of oil and grease.

– Lubricate running surfaces of the camshafts.

Cylinder head (left-side):

– Position camshafts in cylinder head as illustrated.

• The cams of No. 5 cylinder point downwards at equal angles -arrows-.

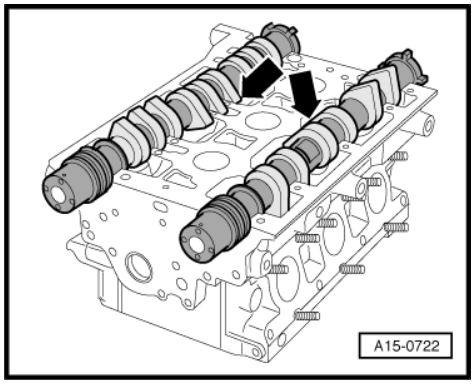

Cylinder head (right-side):

– Position camshafts in cylinder head as illustrated.

• The cams of No. 3 cylinder point upwards at equal angles -arrows-.

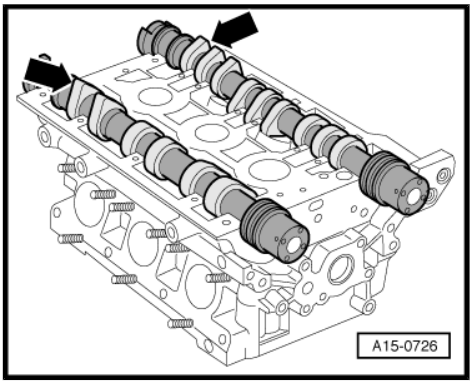

Continuation for both sides:

– Cut off nozzle of tube at front marking (∅ of nozzle approx. 1 mm).

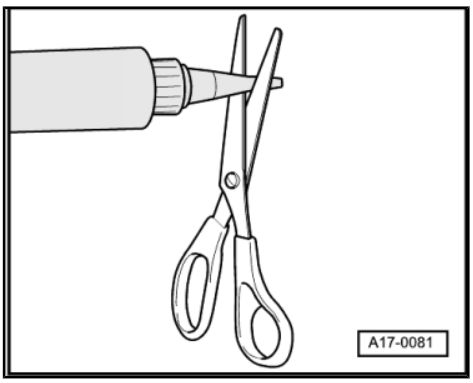

– Apply sealant to the clean sealing surface on the ladder frame as illustrated.

• The bead of sealant should be approx. 1.2 mm wide.

• The sealant bead must be at least 5 mm away from the camshaft bearings at the points -1 ... 8- in the illustration.

• Additionally apply a ring of sealant on the sealing surface around each spark plug hole -9 ... 11-.

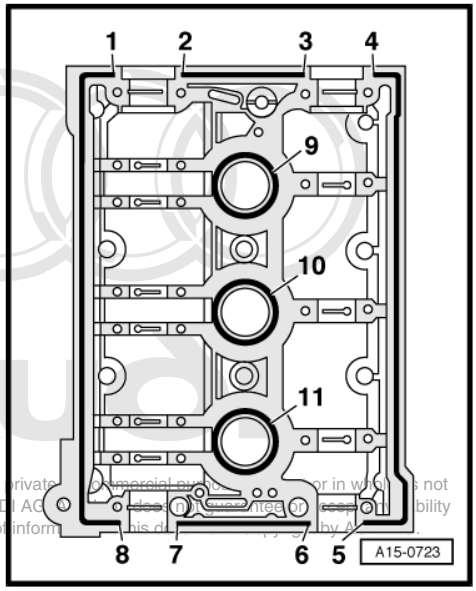

Note

The bead of sealant must be applied exactly according to these instructions, otherwise excess sealant can get into the camshaft bearings.

Protected by copyright. Copying for private or commercial purposes, in part or in whole, is not permitted unless authorised by AUDI AG. AUDI AG does not guarantee or assume any liability with respect to the correctness of information in this document. Copyright by AUDI AG.

– Fit ladder frame immediately and fix in position using mandrel -T40029- .

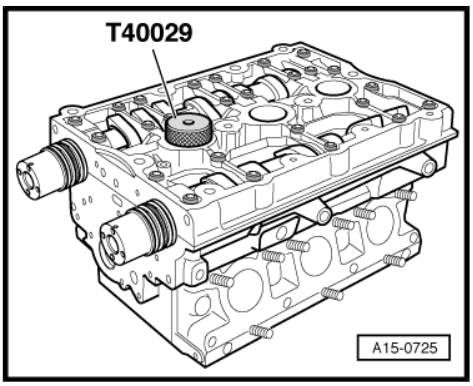

Note

♦ *The ladder frame should be fitted and secured without delay, as the sealant starts hardening immediately.*

♦ *After installing the ladder frame, wait about 30 minutes for the sealant to dry.*

– To start with, tighten bolts on retaining frame hand-tight: tighten uniformly in the sequence shown by the numbers, and then following the arrows.

• The ladder frame should make contact with the cylinder head over the full surface.

– Tighten bolts securing ladder frame to final torque (10 Nm).

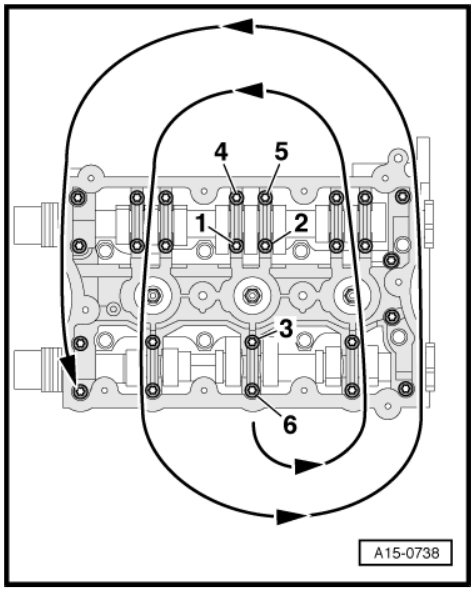

– Pull mandrel -T40029- out of cylinder head and ladder frame using puller -T10055- .

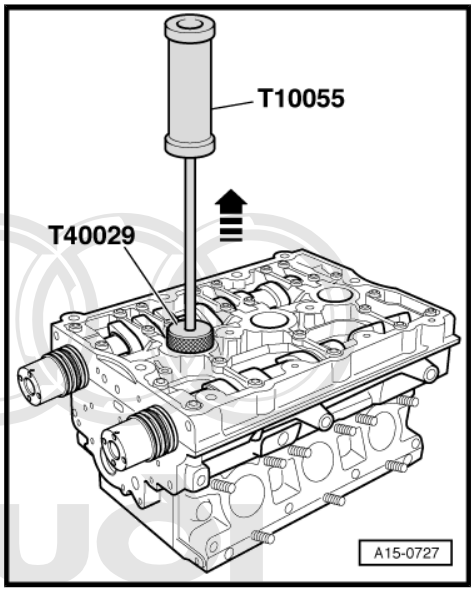

Cylinder head (left-side):

Protected by copyright. Copying for private or commercial purposes, in part or in whole, is not permitted unless authorised by AUDI AG. AUDI AG does not guarantee or accept any liability with respect to the correctness of information in this document. Copyright by AUDI AG.

– Attach counterhold -T40030- to camshafts.

– Expand counterhold -T40030- by means of the threaded spindle (tightening torque max. 10 Nm) until it is seated with zero play.

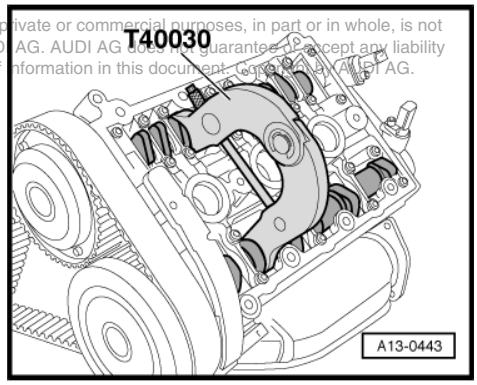

Protected by copyright. Copying for private or commercial purposes, in part or in whole, is not permitted unless authorised by AUDI AG. AUDI AG does not guarantee or accept any liability with respect to the correctness of information in this document. Copyright by AUDI AG.

Cylinder head (right-side):

– Install camshaft sprocket on exhaust camshaft.

– Rotate exhaust camshaft -arrow 1- and inlet camshaft -arrow 2- 30° in direction of -arrows- ...

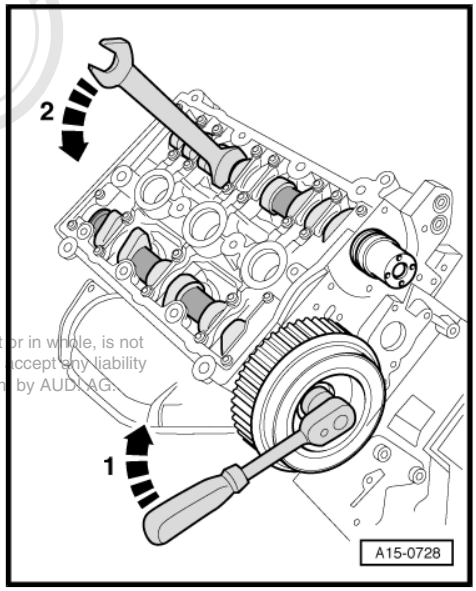

– ... until cams -arrows- at No. 3 cylinder on inlet and exhaust camshafts are positioned as shown in illustration.

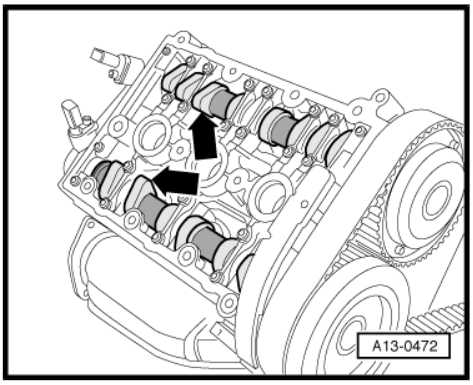

– Attach counterhold -T40030- to camshafts.

– Remove camshaft sprocket from exhaust camshaft again.

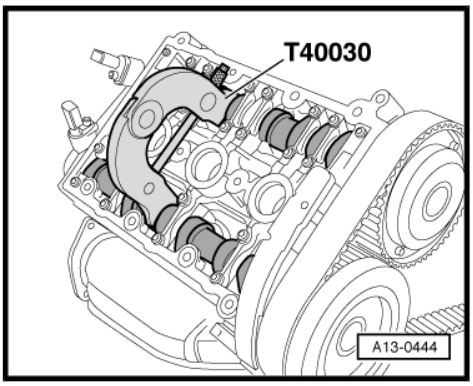

Continuation for both sides:

– Install housing for Hall sender and tighten bolts -1 ... 6-.

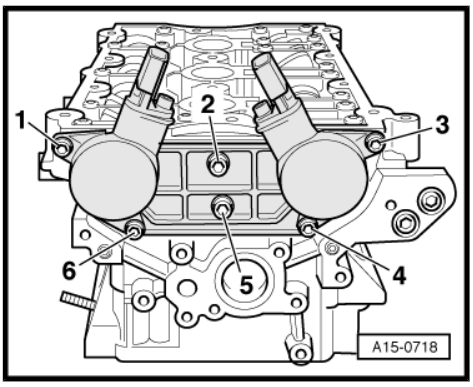

– Check that piston rings are installed on camshafts and that ends of piston rings are hooked together.

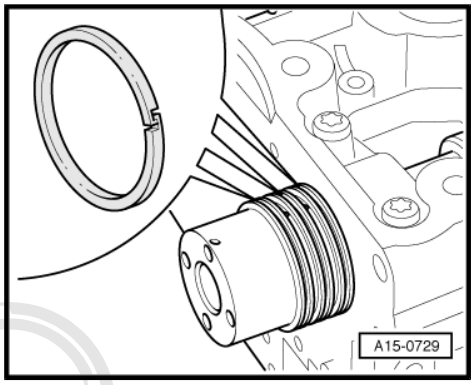

– If necessary, hook ends of piston rings -arrows- together as illustrated.

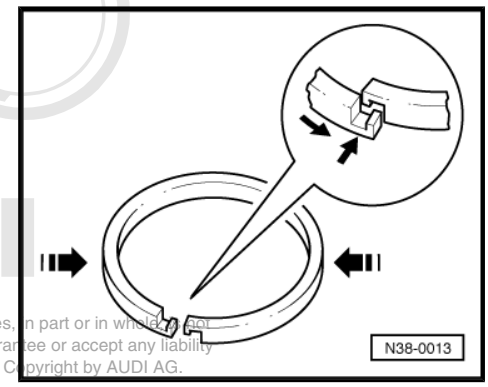

Protected by copyright. Copying for private or commercial purposes, in part or in whole, is not permitted unless authorised by AUDI AG. AUDI AG does not guarantee or accept any liability with respect to the correctness of information in this document. Copyright by AUDI AG.

Note

If camshaft oil seals are being renewed, they must be pried out using lever -T40017- before installing housing for camshaft control valves. Installing camshaft oil seals *⇒ page 103* *.*

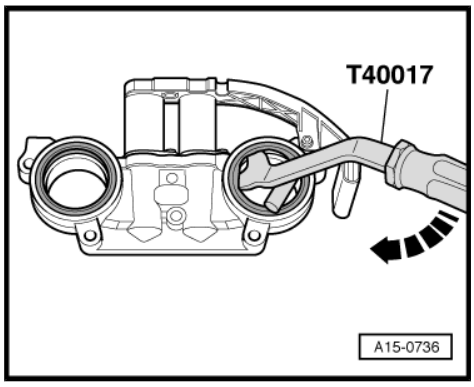

– Install housing for camshaft control valves and tighten bolts -1 ... 6-.

Perform further installation in reverse order, paying attention to the following:

– Install combination valve for secondary air system: left-side ⇒ page 235 , right-side ⇒ page 236 .

– Install toothed belt (adjust valve timing) ⇒ page 69 .

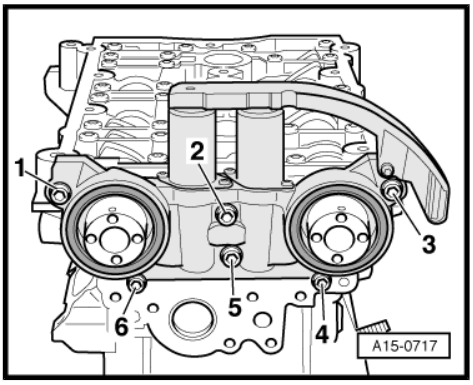

Note

- *Engine is not to be started for approx. 30 minutes after installing camshafts. Hydraulic valve compensation elements have to settle (otherwise valves will strike pistons).*
- *After working on the valve gear, turn the engine carefully at least 2 rotations by hand to ensure that none of the valves make contact when the starter is operated.*

Tightening torques

Component	Nm
Ladder frame to cylinder head	10
Housing for Hall sender to cylinder head	10
Housing for camshaft control valves to cylinder head	10
Toothed belt guard (rear) to cylinder head/ cylinder block	10 [15)]

15) Renew bolts.

Reproduction of this document for private or commercial purposes, in part or in whole, is not permitted unless authorised by AUDI AG. AUDI AG does not guarantee or accept any liability with respect to the correctness of information in this document. Copyright by AUDI AG.

4.6 Checking hydraulic bucket tappets

Special tools and workshop equipment required

- Feeler gauge
- Wood or plastic wedge

Note

- *Hydraulic bucket tappets cannot be serviced.*
- *Irregular valve noises when starting engine are normal.*

Test sequence

– Start engine and run until coolant temperature reaches approx. 80°C.

– Increase engine speed to about 2500 rpm for 2 minutes (perform road test if necessary).

Note

If the irregular valve noises stop but recur repeatedly during short trips, renew the oil retention valve. Fitting location of oil retention valve: beneath cover on intake manifold *⇒ page 157* *.*

If the hydraulic tappets are still noisy, locate defective tappet as follows:

– Remove cylinder head cover: left-side ⇒ page 74 , right-side ⇒ page 76 .

– Rotate crankshaft clockwise at central bolt for toothed belt sprocket until cams of cylinder to be checked are pointing upwards -arrows-.

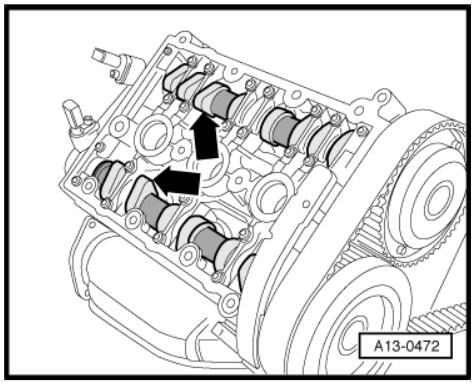

– Determine clearance between cam and bucket tappet by pressing down bucket tappet with a suitable wood or plastic wedge.

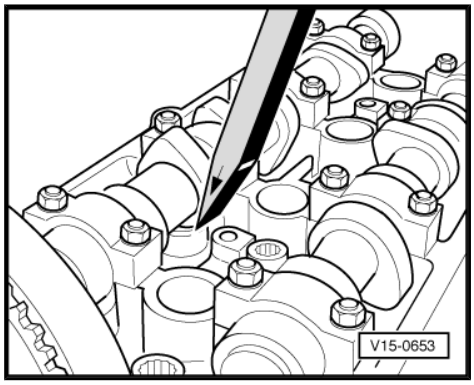

If it is possible to insert a feeler gauge of 0.20 mm between camshaft and bucket tappet:

– Renew the bucket tappet; see Removing and installing camshafts and camshaft adjuster ⇒ page 105 .

Note

- *Engine is not to be started for approx. 30 minutes after installing camshafts. Hydraulic valve compensation elements have to settle (otherwise valves will strike pistons).*
- *After working on the valve gear, turn the engine carefully at least 2 rotations by hand to ensure that none of the valves make contact when the starter is operated.*

Protected by copyright. Copying for private or commercial purposes, in part or in whole, is not permitted unless authorised by AUDI AG. AUDI AG does not guarantee or accept any liability with respect to the correctness of information in this document. Copyright by AUDI AG.

4.7 Renewing valve stem oil seals with cylinder head installed

Special tools and workshop equipment required

- Adapter -T40012-
- Spark plug socket -3122 B-
- Puller for valve stem oil seal -3364-
- Press tool for valve stem oil seal -3365-
- Disassembly and assembly tool -VAS 5161-

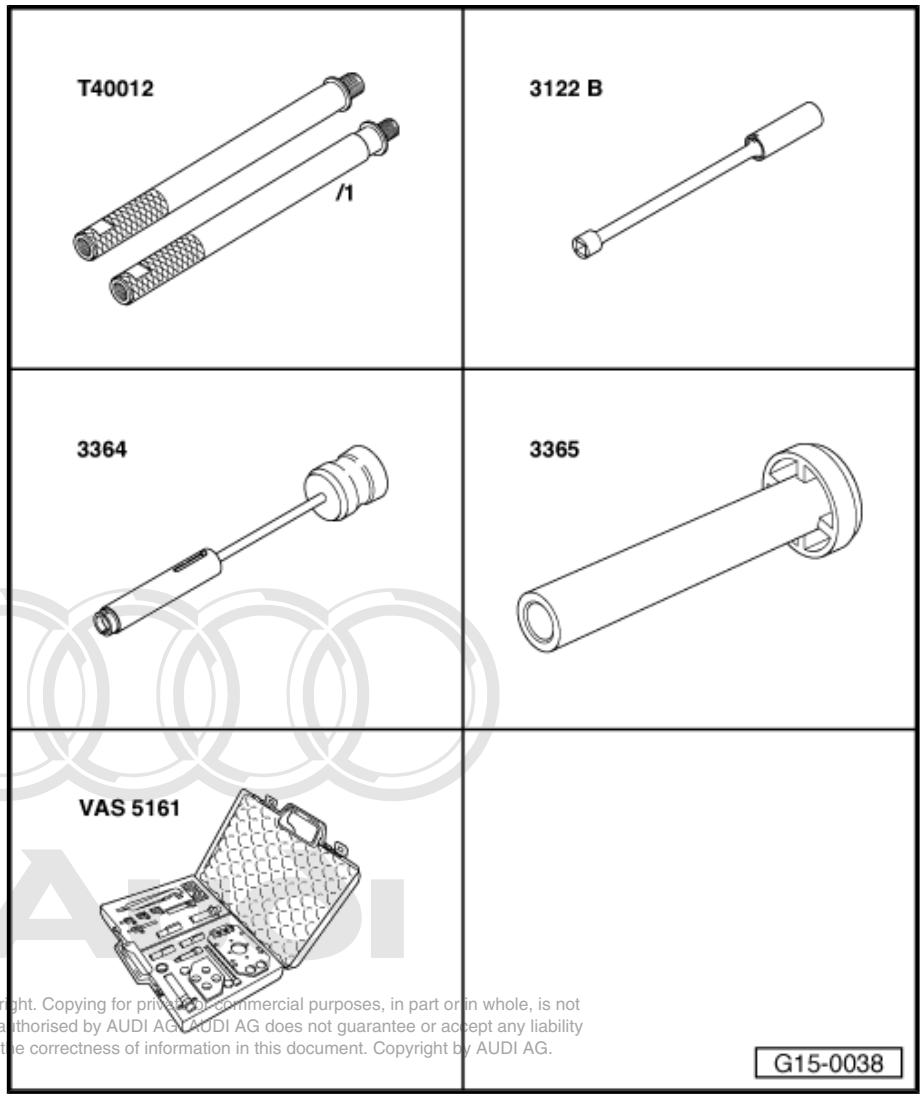

Protected by copyright. Copying for private or commercial purposes, in part or in whole, is not permitted unless authorised by AUDI AG. AUDI AG does not guarantee or accept any liability with respect to the correctness of information in this document. Copyright by AUDI AG.

Removing

- Cylinder head installed.

– Remove the camshafts ⇒ page 105 .

Note

Make sure that the hydraulic bucket tappets are not interchanged; mark allocation on rear with a waterproof felt-tipped pen.

– Remove the bucket tappets out of the guides.

– Place the bucket tappets down on a clean surface with the contact surface facing downwards in the order that they were removed.

– Remove spark plugs with spark plug spanner -3122 B- .

– Set piston of the respective cylinder to “bottom dead centre”.

Screw adapter -T40012- with seal hand-tight into corresponding spark plug thread, connect to compressed air hose and apply a steady pressure.

- Air pressure: at least 6 bar

– Insert punch -VAS 5161/3- into bucket tappet guide.

– Knock valve cotters on all five valves loose using a plastic hammer.

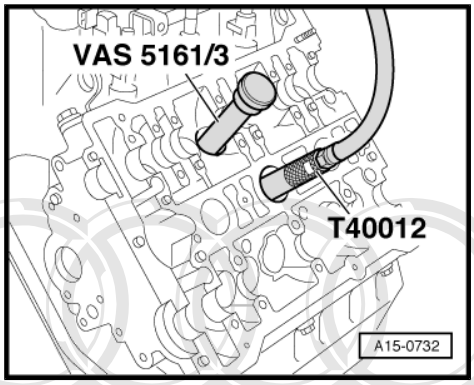

Inlet side:

– Screw snap-in device -VAS 5161/6- with interlocking fork -VAS 5161/5- into threaded hole on cylinder head.

– Push guide bush -VAS 5161/13- into bucket tappet guide of the valve to be removed until stop.

- Installation position: knurled surfaces face perpendicular to direction of travel.

– Slide knurled spacer ring -VAS 5161/17- onto assembly cartridge -VAS 5161/8- .

– Insert assembly cartridge into guide bush.

– Attach pressure fork -VAS 5161/2- to snap-in device -VAS 5161/6- and push assembly cartridge down.

– At the same time, turn knurled screw of assembly cartridge clockwise until tips engage in valve cotters.

– Move knurled screw back and forth slightly; the valve cotters are thus forced apart and taken up by the cartridge.

– Release the pressure fork.

– Take out assembly cartridge with spacer ring, guide bush, valve spring plate and valve spring.

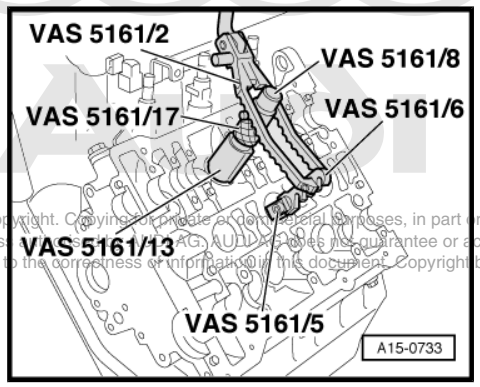

Protected by copyright. Copying for private or commercial purposes, in part or in whole, is not permitted unless authorised by AUDI AG. AUDI AG does not guarantee or accept any liability with respect to the correctness of information in this document. Copyright by AUDI AG.

Exhaust side:

– Screw snap-in device -VAS 5161/6- with interlocking fork -VAS 5161/5- into threaded hole on cylinder head.

– Push guide bush -VAS 5161/14- as far as it will go into bucket tappet guide for valve to be removed.

- Installation position: knurled surfaces face perpendicular to direction of travel.

– Slide knurled spacer ring -VAS 5161/17- onto assembly cartridge -VAS 5161/8- .

– Insert assembly cartridge into guide bush.

– Attach pressure fork -VAS 5161/2- to snap-in device -VAS 5161/6- and push assembly cartridge down.

– At the same time, turn knurled screw of assembly cartridge clockwise until ends engage in valve cotters.

– Move knurled screw back and forth slightly; the valve cotters are thus forced apart and enter into cartridge.

– Release the pressure fork.

– Take out assembly cartridge with spacer ring, guide bush, valve head and valve spring.

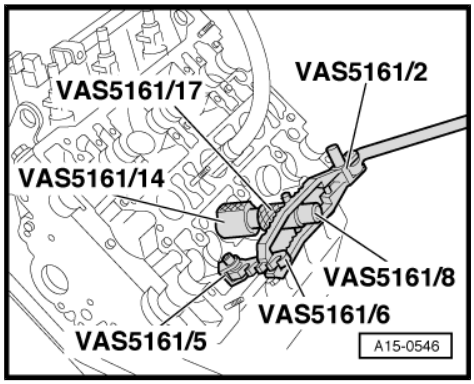

Continuation for both sides:

– Pull off valve stem oil seal with puller for valve stem oil seal -3364- .

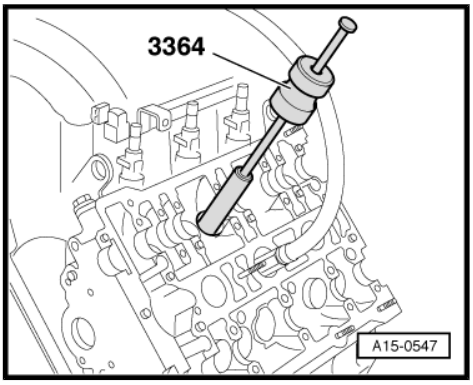

If the puller -3364- cannot be used on some of the valve stem oil seals due to the confined space, proceed as follows:

– Knock pin -arrow- of puller -3364- out using a drift and remove the extractor attachment.

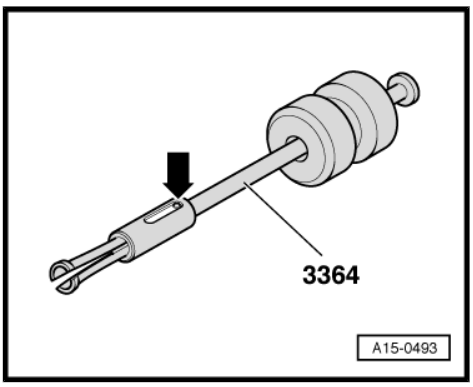

Protected by copyright. Copying for private or commercial purposes, in part or in whole, is not permitted unless authorised by AUDI AG. AUDI AG does not guarantee or accept any liability with respect to the correctness of information in this document. Copyright by AUDI AG.

– Attach lower part of puller -3364- to valve stem oil seal.

– Secure puller -3364- with drift or roll-pin drift -1- as shown in the illustration.

– Apply an assembly lever to puller -3364- and pull out valve stem oil seal -arrow-.

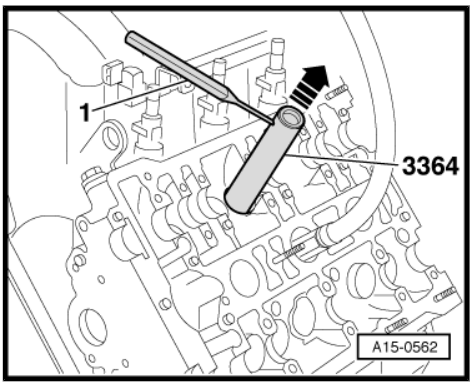

Installing

> ⚠ Caution
>
> *Make sure valve stem oil seals are not damaged when installing.*
>
> ◆ *New valve stem oil seals -B- are supplied with plastic sleeve; fit plastic sleeve -A- onto valve stem.*

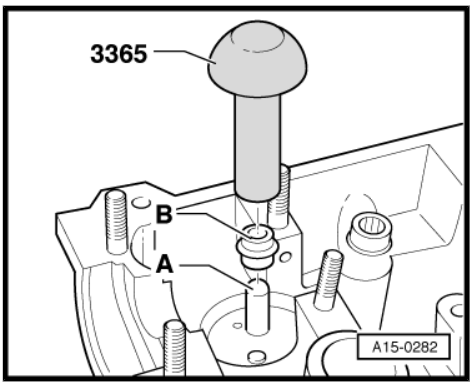

– Lightly lubricate sealing lip of valve stem oil seal.

– Slip valve stem oil seal over plastic sleeve.

– Carefully press the valve stem oil seal onto valve guide using fitting tool -3365- .

– Remove the plastic sleeve.

If valve cotters have been removed from assembly cartridge, they need to be put into insertion device -VAS 5161/18- first.

- Larger diameter of valve cotters faces upwards.

– Press assembly cartridge -VAS 5161/8- onto insertion device from above and take up valve cotters.

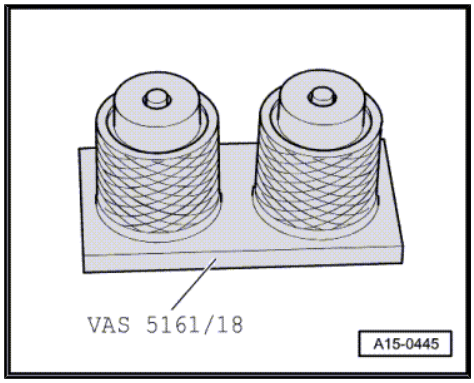

– Reinstall the assembly cartridge -VAS 5161/8- into guide bush -VAS 5161/13- and -VAS 5161/14- .

– Push pressure fork down and pull knurled screw upwards while turning to left and right - this will insert the valve cotters.

– Release the pressure fork with knurled screw still in pulled position.

– Insert bucket tappet.

– Install camshafts ⇒ page 105 .

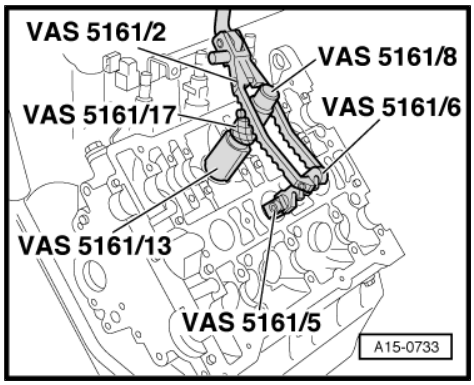

Note

♦ *Engine is not to be started for approx. 30 minutes after installing camshafts. Hydraulic valve compensation elements have to settle (otherwise valves will strike pistons).*

♦ *After working on the valve gear, turn the engine carefully at least 2 rotations to ensure that none of the valves make contact when the starter is operated.*

Protected by copyright. Copying for private or commercial purposes, in part or in whole, is not permitted unless authorised by AUDI AG. AUDI AG does not guarantee or accept any liability with respect to the correctness of information in this document. Copyright by AUDI AG.

4.8 Renewing valve stem oil seals with cylinder head removed

Special tools and workshop equipment required

- Valve stem seal puller -3364-
- Valve stem seal fitting tool -3365-
- Removal and installation device for valve cotters -VAS 5161-
- Engine and gearbox support -VAS 6095-
- Cylinder head tensioning device -VAS 6419-

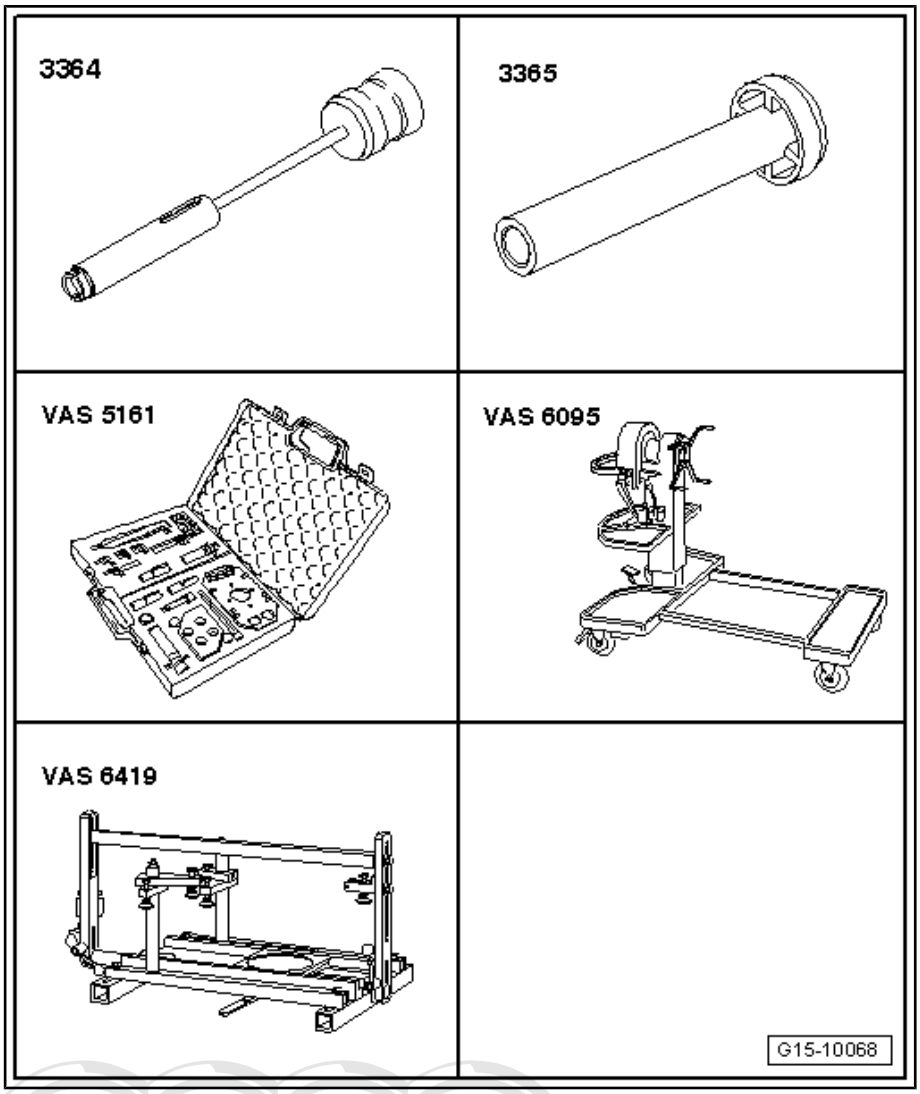

Removing

- Cylinder head installed.

– Remove camshafts ⇒ page 105 .

Note

Make sure that the hydraulic bucket tappets are not interchanged; mark allocation on rear with a waterproof felt-tipped pen.

– Remove the bucket tappets out of the guides.

– Place the bucket tappets down on a clean surface with the contact surface facing downwards in the order that they were removed.

Protected by copyright. Copying for private or commercial purposes, in part or in whole, is not permitted unless authorised by AUDI AG. AUDI AG does not guarantee or accept any liability with respect to the correctness of information in this document. Copyright by AUDI AG.

– Insert cylinder head tensioning device -VAS 6419- into engine and gearbox support -VAS 6095- .
– Secure cylinder head in cylinder head tensioning device, as shown in illustration.
– Connect cylinder head tensioning device to compressed air.
– Using lever -arrow-, slide air pad under combustion chamber where valve stem oil seal is to be removed.
– Apply just enough compressed air to bring air pad into contact with valve heads.

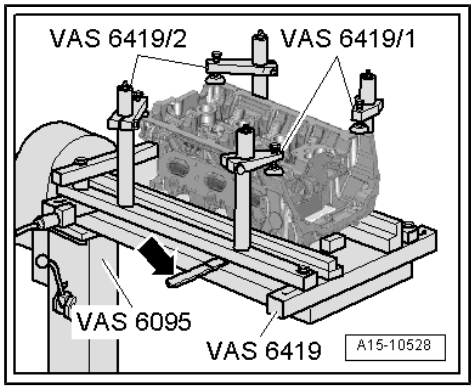

– Apply drift -VAS 5161/3- to valve spring plate and use plastic-headed hammer to release sticking valve cotters.

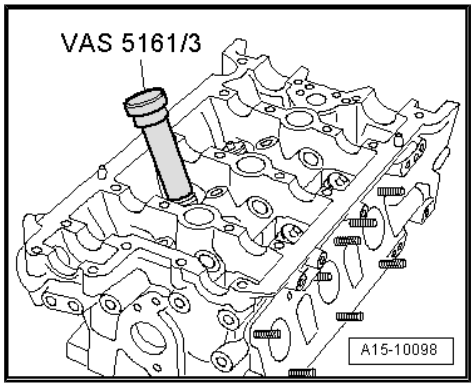

Inlet side:

– Screw snap-in device -VAS 5161/6- with interlocking fork -VAS 5161/5- into threaded hole on cylinder head.
– Push guide bush -VAS 5161/13- as far as it will go into bucket tappet guide for valve to be removed.
• Installation position: knurled surfaces face perpendicular to direction of travel.
– Slide knurled spacer ring -VAS 5161/17- onto assembly cartridge -VAS 5161/8- .
– Insert assembly cartridge into guide bush.
– Attach pressure fork -VAS 5161/2- to snap-in device -VAS 5161/6- and push assembly cartridge down.
– At the same time, turn knurled screw of assembly cartridge clockwise until ends engage in valve cotters.
– Move knurled screw back and forth slightly; the valve cotters are thus forced apart and enter into cartridge.

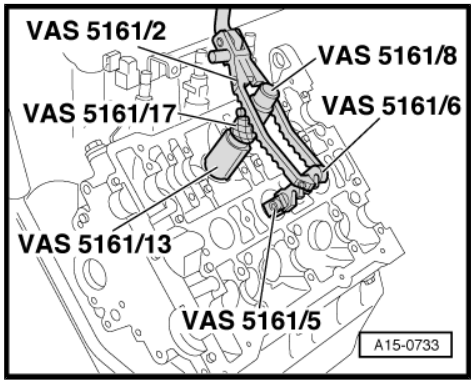

– Release the pressure fork.
– Take out assembly cartridge with spacer ring, guide bush, valve head and valve spring.

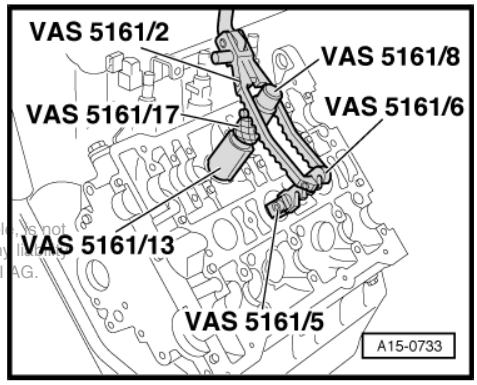

Protected by copyright. Copying for private or commercial purposes, in part or in whole is not permitted unless authorised by AUDI AG. AUDI AG does not guarantee or accept any liability with respect to the correctness of information in this document. Copyright by AUDI AG.

Exhaust side:

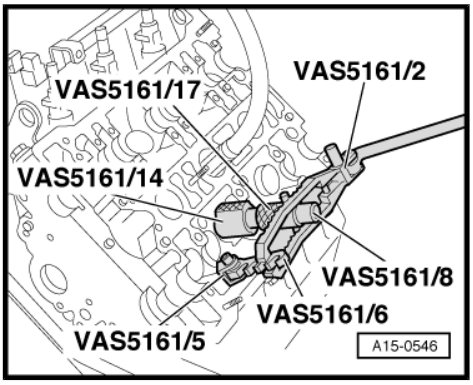

– Screw snap-in device -VAS 5161/6- with interlocking fork -VAS 5161/5- into threaded hole on cylinder head.
– Push guide bush -VAS 5161/14- into bucket tappet guide of the valve to be removed until stop.
• Installation position: knurled surfaces face perpendicular to direction of travel.
– Slide knurled spacer ring -VAS 5161/17- onto assembly cartridge -VAS 5161/8- .
– Insert assembly cartridge into guide bush.
– Attach pressure fork -VAS 5161/2- to snap-in device -VAS 5161/6- and push assembly cartridge down.
– At the same time, turn knurled screw of assembly cartridge clockwise until tips engage in valve cotters.
– Move knurled screw back and forth slightly; the valve cotters are thus forced apart and taken up by the cartridge.
– Release the pressure fork.
– Take out assembly cartridge with spacer ring, guide bush, valve spring plate and valve spring.

Continuation for both sides:

Protected by copyright. Copying or distribution of this document is not permitted unless authorised by AUDI AG. AUDI AG does not guarantee or accept any liability with respect to the correctness of information in this document. Copyright by AUDI AG.

– Pull off valve stem oil seal with valve stem seal puller -3364- .

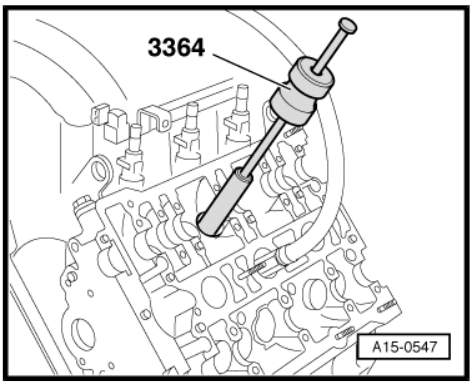

Installing

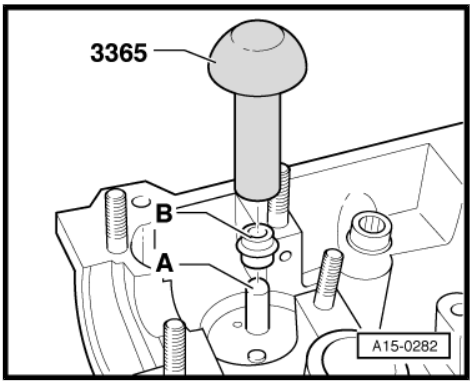

> ⚠ Caution
>
> *Make sure valve stem oil seals are not damaged when installing.*
>
> ♦ *New valve stem oil seals -B- are supplied with plastic sleeve; fit plastic sleeve -A- onto valve stem.*

– Lightly lubricate sealing lip of valve stem oil seal.
– Slip valve stem oil seal over plastic sleeve.
– Carefully press valve stem oil seal down onto valve guide using fitting tool -3365- .
– Remove plastic sleeve.

If valve cotters have been removed from assembly cartridge, they need to be put into insertion device -VAS 5161/18- first.

- Larger diameter of valve cotters faces upwards.

– Press assembly cartridge -VAS 5161/8- onto insertion device from above and pick up valve cotters.

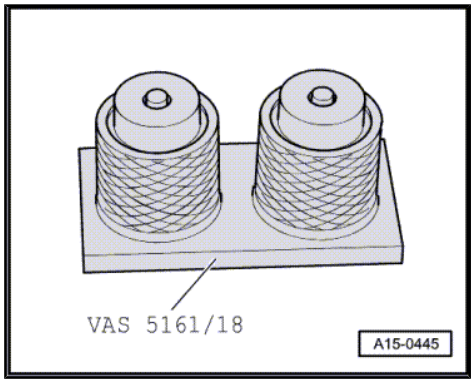

– Reinstall assembly cartridge -VAS 5161/8- in guide bush -VAS 5161/13- and -VAS 5161/14- .

– Push pressure fork down and pull knurled screw upwards while turning to left and right — this will insert valve cotters.

– Release pressure fork with knurled screw still in pulled position.

– Insert bucket tappet.

– Install camshafts ⇒ page 105 .

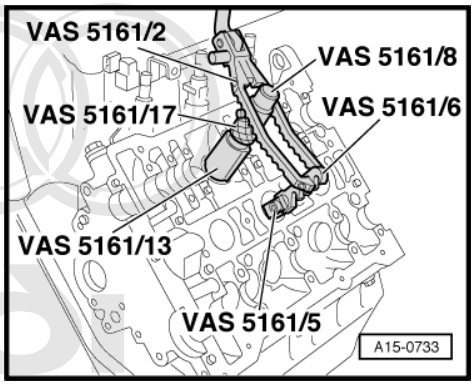

Note

♦ *After installing camshafts, wait for approx. 30 minutes before starting engine. Hydraulic valve compensation elements have to settle (otherwise valves will strike pistons).*

♦ *After working on the valve gear, turn the engine carefully at least 2 rotations to ensure that none of the valves make contact when the starter is operated.*

Protected by copyright. Copying for private or commercial purposes, in part or in whole, is not permitted unless authorised by AUDI AG. AUDI AG does not guarantee or accept any liability with respect to the correctness of information in this document. Copyright by AUDI AG.

4.9 Checking valve guides

Special tools and workshop equipment required

♦ Universal dial gauge bracket -VW 387-

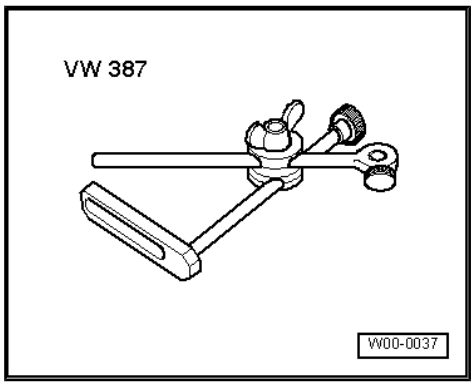

♦ Dial gauge

Test sequence

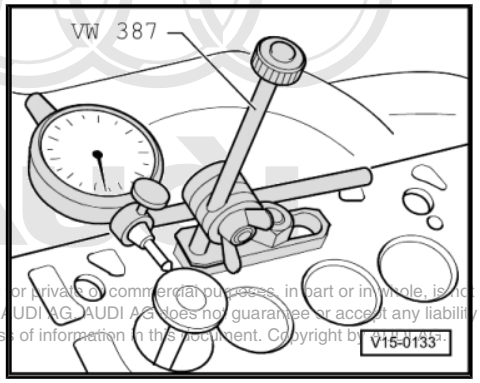

Protected by copyright. Copying for private or commercial purposes, in part or in whole, is not permitted unless authorised by AUDI AG. AUDI AG does not guarantee or accept any liability with respect to the correctness of information in this document. Copyright by AUDI AG.

– Insert valve into valve guide. Only insert inlet valve into inlet guide and exhaust valve into exhaust guide, as the stem diameters are different.

• End of valve stem must be flush with valve guide.

– Determine amount of sideways play.

• Wear limit (sideways play): 0.8 mm.

Note

♦ *If the valve has to be renewed as part of a repair, use a new valve for the measurement.*

♦ *If the wear limit is exceeded, repeat the measurement with new valves. Renew cylinder head if wear limit is still exceeded. Valve guides cannot be renewed.*

4.10 Checking valves

– Visually inspect for scoring on stem and surface of seat.

If scoring is clearly visible:

– Renew the relevant valve.

4.11 Machining valve seats

Note

If a good seating pattern cannot be obtained by grinding the valve seats (lapping), they must be refaced (machined):

Special tools and workshop equipment required

♦ Depth gauge

♦ Valve seat machining tool

Note

♦ *When servicing engines with leaking valves, it is not sufficient to machine (reface) the valve seats and renew the valves. The valve guides must also be checked for wear. This is particularly important on high-mileage engines* *⇒ page 122* *.*

♦ *Valve seats should only be machined to the extent required to give a proper seating pattern.*

♦ *The maximum permissible machining dimension must be calculated before starting work.*

♦ *If the machining dimension is exceeded, the proper functioning of the hydraulic valve clearance compensation cannot be ensured. Renew the cylinder head.*

Calculating maximum permissible machining dimension

– Insert valve and press firmly against valve seat.

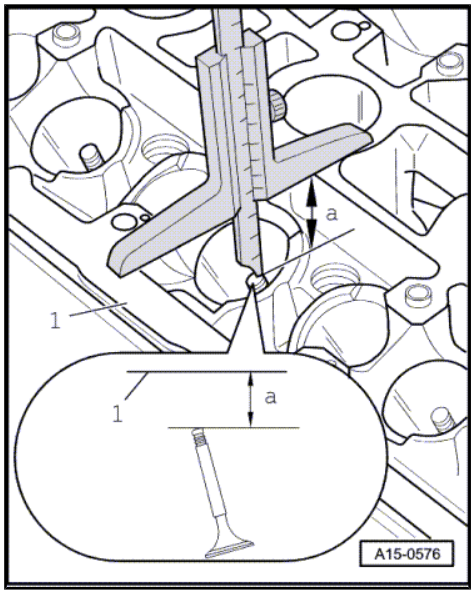

Note

If the valve has to be renewed as part of a repair, use a new valve for the measurement.

– Measure distance -a- between valve stem end (upper edge) and upper cylinder head surface with a depth gauge.

– Calculate the maximum permissible machining dimension using the measured distance and the minimum dimension.

Minimum dimensions		
Inlet valves (outer)	Inlet valve (centre)	Exhaust valves
31.0 mm	32.2 mm	31.9 mm

Measured distance minus minimum dimension = max. permissible machining dimension.

Example for inlet valve (outer):	
Measured distance	31.4 mm
– Minimum dimension	– 31.0 mm
= Max. permissible machining dimension	= 0.4 mm

Note

If the maximum permissible machining dimension is 0 mm or less than 0 mm, repeat the measurement with a new valve. If the measured result is again 0 mm or less than 0 mm, renew the cylinder head.

Machining valve seats

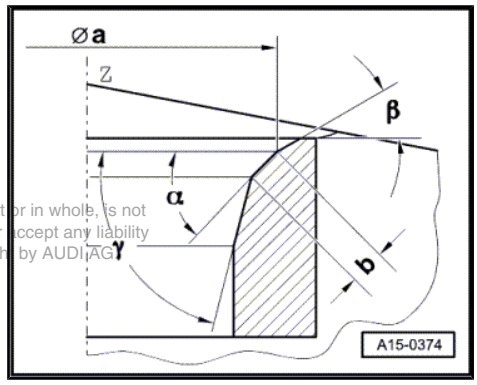

Inlet valve seat

∅ a - 26.2 mm

b - 1.5 … 1.8 mm

Z - Lower edge of cylinder head

α - 45° valve seat angle

β - 30° upper correction angle

γ - 60° lower correction angle

Exhaust valve seat

∅ a - 29.0 mm

b - 1.8 mm

Z - Lower edge of cylinder head

α - 45° valve seat angle

β - 30° upper correction angle

γ - 60° lower correction angle

Protected by copyright. Copying for private or commercial purposes, in part or in whole, is not permitted unless authorised by AUDI AG. AUDI AG does not guarantee or accept any liability with respect to the correctness of information in this document. Copyright by AUDI AG.

5 Checking camshaft adjustment

- By altering the valve timing the engine control unit varies the cylinder charge to suit the current engine load and rpm.
- The system employs a total of 4 camshaft control valves, which allow varying amounts of oil pressure to act on the timing control mechanism.
- The timing control for the exhaust camshafts has a single-step adjustment; the inlet camshafts have a continuous adjustment.

5.1 Testing the system

Special tools and workshop equipment required

- Vehicle diagnostic, testing and information system -VAS 5051 A- with diagnosis lead -VAS 5051/5A-

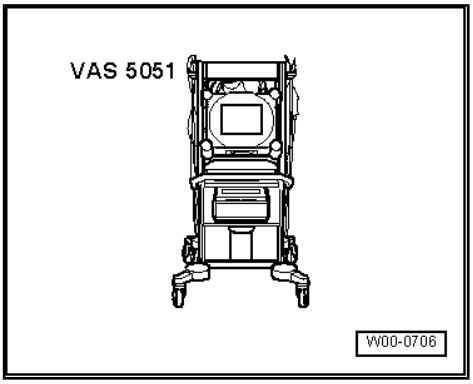

WARNING

- *Test equipment must always be secured on the rear seat and operated from that position by a second person.*
- *If test and measuring instruments are operated from front passenger's seat and the vehicle is involved in an accident, the person sitting in this seat could be seriously injured when the airbag is triggered.*

Test conditions

- Vehicle diagnostic, testing and information system - VAS 5051 A- with diagnosis lead -VAS 5051/5A- is connected; vehicle self-diagnosis and vehicle system “01 - Engine electronics” is selected. Engine must be idling.
- Coolant temperature at least 80°C.
- Selector lever in position “P”.

Protected by copyright. Copying for private or commercial purposes, in part or in whole, is not permitted unless authorised by AUDI AG. AUDI AG does not guarantee or accept any liability with respect to the correctness of information in this document. Copyright by AUDI AG.

Test sequence

– Under -1- select diagnostic function “04 - Basic setting”.

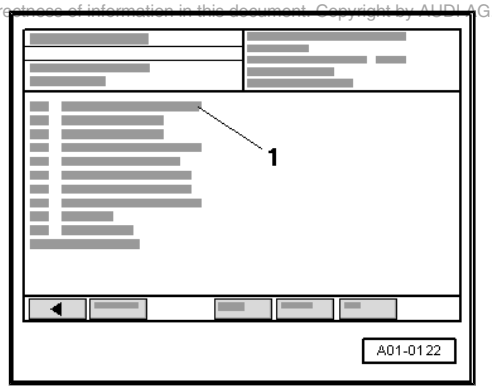

– Using the keypad -2-, enter “094” to select “Display group 094” and confirm entry with the Q key.

1 - Enter display group

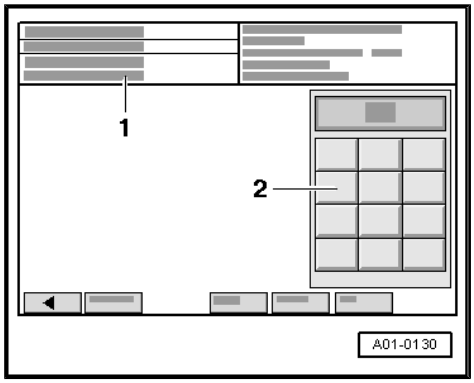

– Activate basic setting by touching key -A-.
– Press the accelerator pedal and brake pedal simultaneously.
• The idling speed is increased to approx. 1900 rpm.
– Check specifications in display zones -3- and -4-.

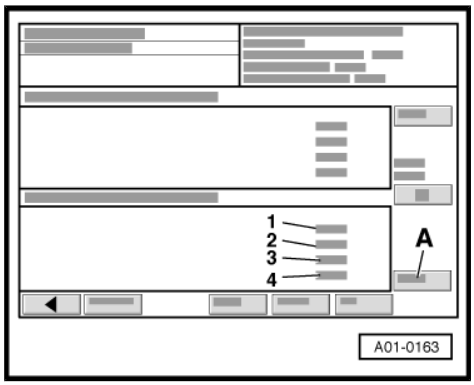

Display zone	Readout	Specification
3 and 4	Status of diagnosis: Test OFF Test ON Syst. OK Syst. n. OK.	Syst. OK

Protected by copyright. Copying for private or commercial purposes, in part or in whole, is not permitted unless authorised by AUDI AG. AUDI AG does not guarantee or accept any liability with respect to the correctness of information in this document. Copyright by AUDI AG.

Note

If readout shows “Syst.n.OK”: test camshaft adjustment (inlet) *⇒ page 128* .

– Press the ↑ button twice to advance to Display group 096.
– Activate basic setting by touching key -A-.
– Press the accelerator pedal and brake pedal simultaneously.
• The idling speed is increased to approx. 1900 rpm.
– Check specifications in display zones -3- and -4-.

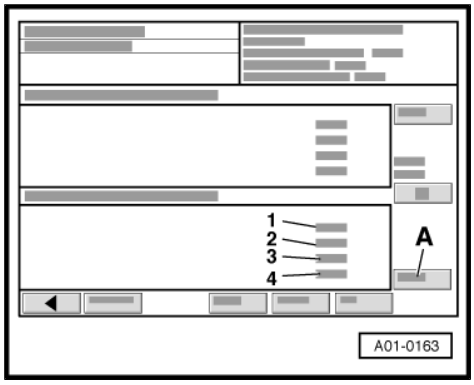

Display zone	Readout	Specification
3 and 4	Status of diagnosis: Test OFF Test ON Syst. OK Syst. n. OK.	Syst. OK

Note

If readout shows "Syst.n.OK": test camshaft adjustment (exhaust) *⇒ page 127* .

– Press the ↵ key.

5.2 Testing camshaft adjustment (exhaust)

Reproduction or distribution of this document or any part thereof not permitted without written authorisation in whole, is not permitted unless authorised by AUDI AG. AUDI AG does not guarantee or accept any liability with respect to the correctness of information in this document. Copyright by AUDI AG.

– Switch over to the diagnosis function "08 - Read measured value block".

– Use keypad -2- to enter "090" for "Display group number 090" and confirm by touching the Q key.

1 - Enter display group

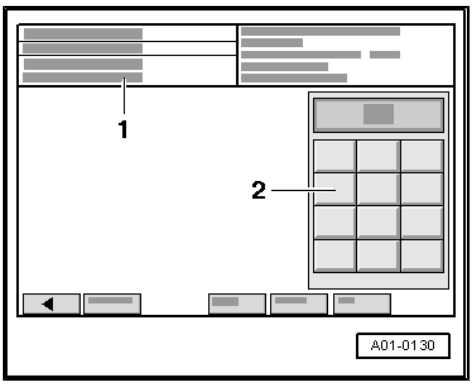

– Check specified values in display zones -2-, -3- and -4-.

• Engine running at idling speed.

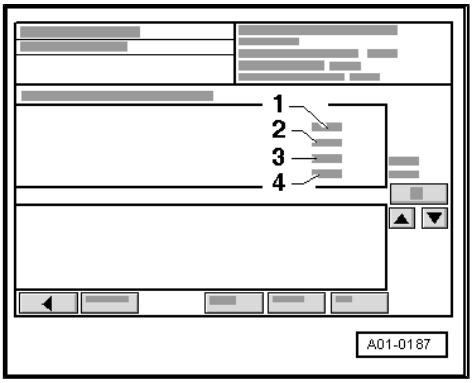

Display zone	Readout	Specification
1	Engine speed	Idling
2	Camshaft timing control	Off
3	Adjustment bank 1	-3 … 3°CA
4	Adjustment bank 2	-3 … 3°CA

– Perform test drive.

– Accelerate the vehicle from 2000 rpm at full throttle in third gear.

– Check specified values in display zones -2-, -3- and -4-.

Display zone	Readout	Specification
1	Engine speed	2000 … 5000 rpm
2	Camshaft timing control	On
3	Adjustment bank 1	19 … 25°CA
4	Adjustment bank 2	19 … 25°CA

Note

- *If specification is not obtained: test relevant camshaft control valve (exhaust)* *⇒ page 129*
- *If the readout only shows a value between 3.0° CA (crankshaft angle) and 19.0° CA during the test drive, this indicates that the solenoid valve for camshaft adjustment is working correctly and feeding the oil pressure to the camshaft adjustment mechanism, but the mechanism is not able to reach its end position (possibly because it is not moving freely).*

5.3 Checking camshaft adjustment (inlet)

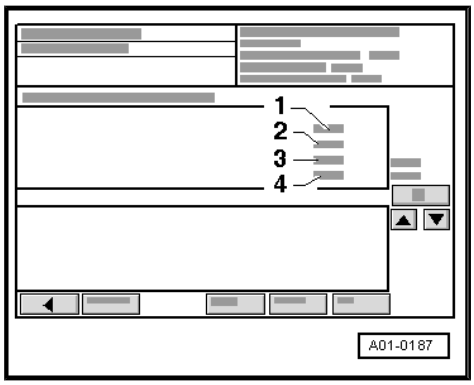

– Press the ↑ button to advance to Display group 091.

Protected by copyright. Copying for private or commercial purposes, in part or in whole, is not permitted unless authorised by AUDI AG. AUDI AG does not guarantee or accept any liability with respect to the correctness of information in this document. Copyright by AUDI AG.

- Engine running at idling speed.

– Check specifications in display zones -3- and -4-.

Display zone	Readout	Specification
1	Engine speed	Idling
2	Duty cycle	15 … 17%
3	Adjustment bank 1	-3 … 3°CA
4	Adjustment bank 2	-3 … 3°CA

– Perform test drive.

– Accelerate the vehicle from 2000 rpm at full throttle in third gear.

– Check specified values in display zones -2-, -3- and -4-.

Display zone	Readout	Specification
1	Engine speed	2000 … 5000 rpm
2	Duty cycle	60 … 100%
3	Adjustment bank 1	39 … 45°CA
4	Adjustment bank 2	39 … 45°CA

Note

- *If specification is not obtained: test relevant camshaft control valve (inlet)* *⇒ page 129*
- *If the readout only shows a value between 3.0°CA (crankshaft angle) and 39.0°CA during the test drive, this indicates that the solenoid valve for camshaft adjustment is working correctly and feeding the oil pressure to the camshaft adjustment mechanism, but the mechanism is not able to reach its end position (possibly because it is not moving freely).*

5.4 Checking solenoid valves for camshaft adjustment

Special tools and workshop equipment required

- Hand-held multimeter -V.A.G 1526 A-
- Voltage tester -V.A.G 1527 B-
- Adapter set -V.A.G 1594 A-
- Test box -V.A.G 1598/31-
- Vehicle diagnostic, testing and information system -VAS 5051 A- with diagnosis lead -VAS 5051/5A-

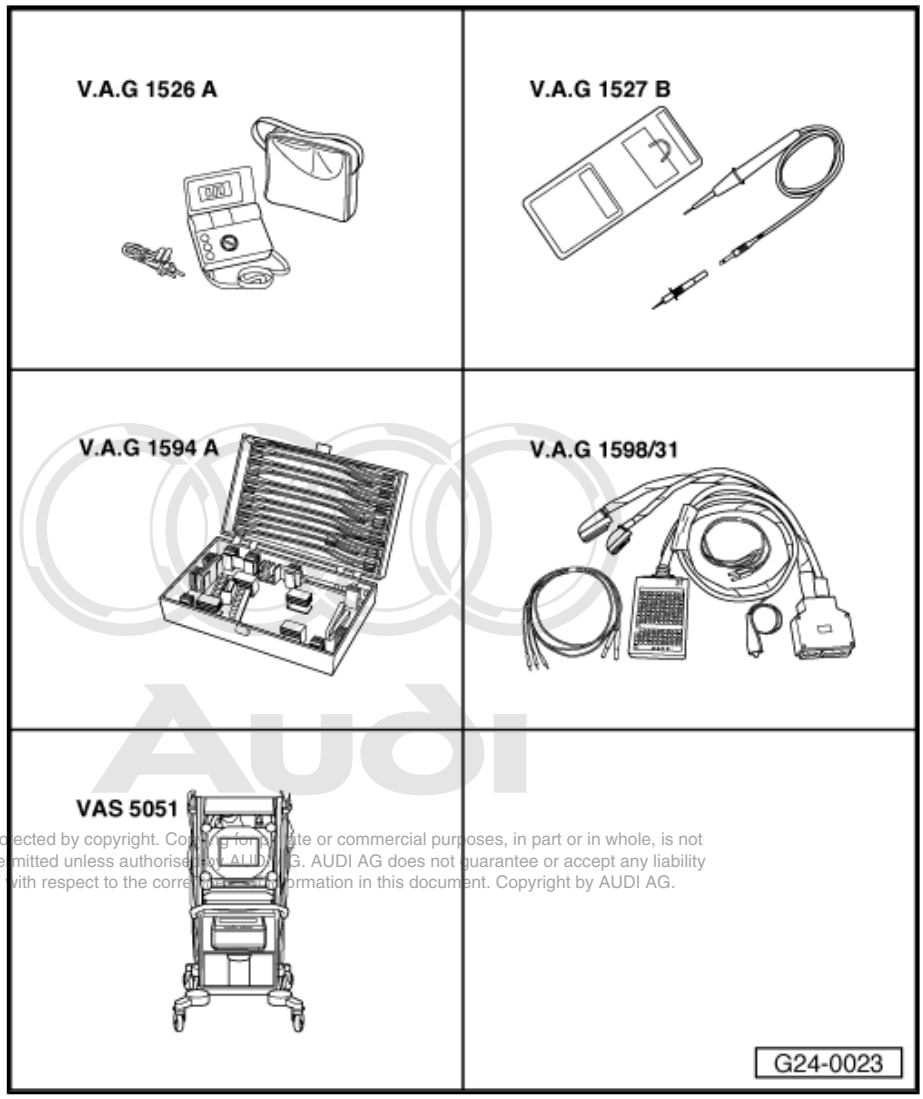

Protected by copyright. Copying for private or commercial purposes, in part or in whole, is not permitted unless authorised by AUDI AG. AUDI AG does not guarantee or accept any liability with respect to the correctness of information in this document. Copyright by AUDI AG.

Actuating solenoid valves for camshaft adjustment (inlet)

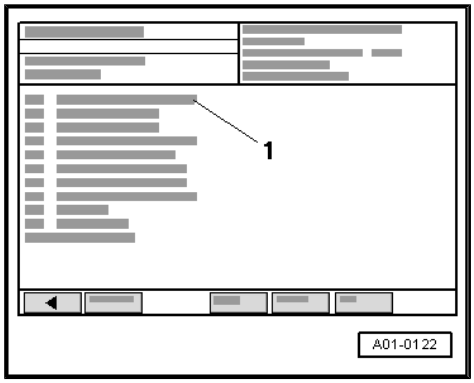

- Vehicle diagnostic, testing and information system -VAS 5051 A- with diagnosis lead -VAS 5051/5A- is connected; vehicle self-diagnosis and vehicle system “01 - Engine electronics” is selected. For this purpose, the ignition must be switched on.

– Under selection menu -1- select the diagnostic function “03 - Final control diagnosis”.

– Press the button ⇨ until the camshaft control valve 1 -N205- is actuated.

- The camshaft control valve 1 -N205- will be actuated for approx. 1 minute in intervals (clicking sound).

– Press the button ⇨ until the camshaft control valve 2 -N208- is actuated.

- The camshaft control valve 2 -N208- will be actuated for approx. 1 minute in intervals (clicking sound).

– Exit function “03 - Final control diagnosis” by pressing the ⇦ key.

– Switch off ignition.

If one of the valves is not actuated (does not click):

– Perform electrical test of camshaft control valves ⇒ page 131 .

Actuating solenoid valves for camshaft adjustment (exhaust)

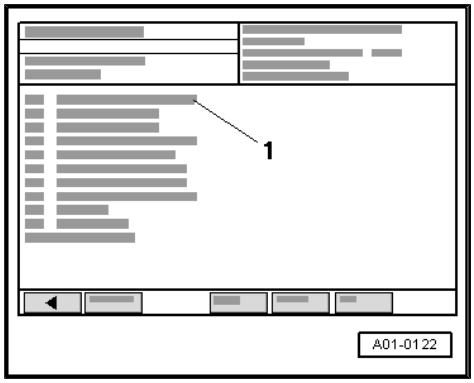

- Vehicle diagnostic, testing and information system -VAS 5051 A- with diagnosis lead -VAS 5051/5A- is connected; vehicle self-diagnosis and vehicle system “01 - Engine electronics” is selected. For this purpose, the ignition must be switched on.

– Under selection menu -1- select the diagnostic function “03 - Final control diagnosis”.

– Press the button ⇨ until the camshaft control valve 1 (exhaust) -N318- is actuated.

- The camshaft control valve 1 (exhaust) -N318- will be actuated for approx. 1 minute in intervals (clicking sound).

Protected by copyright. Copying for private or commercial purposes, in part or in whole, is not permitted without the consent of AUDI AG. AUDI AG does not guarantee or assume any liability with respect to the correctness of information in this document. Copyright by AUDI AG.

– Press the button ⇨ until the camshaft control valve 2 (exhaust) -N319- is actuated.

- The camshaft control valve 2 (exhaust) -N319- will be actuated for approx. 1 minute in intervals (clicking sound).

– Exit function “03 - Final control diagnosis” by pressing the ⇦ key.

– Switch off ignition.

If one of the valves is not actuated (does not click):

– Perform electrical test of camshaft control valves ⇒ page 131 .

5.5 Electrical test of solenoid valves for camshaft adjustment

Cylinder bank 1 (right-side):

– Pull off rear engine cover -arrows-.

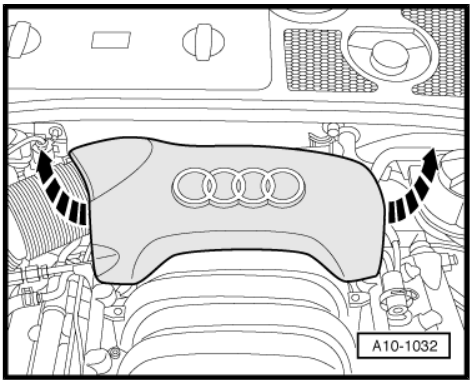

– Detach wheel housing liner (front right) at the front.
– Detach hose -arrow- to secondary air pump at bottom of air cleaner housing.

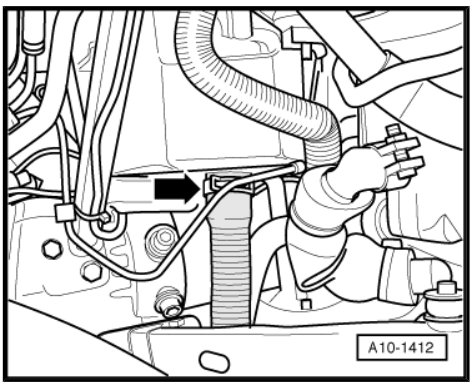

– Remove cover for suspension turret (right-side); to do so, detach spreader clips -1- and unscrew nut -2-.
– Pull cover out of retainers -arrows-.

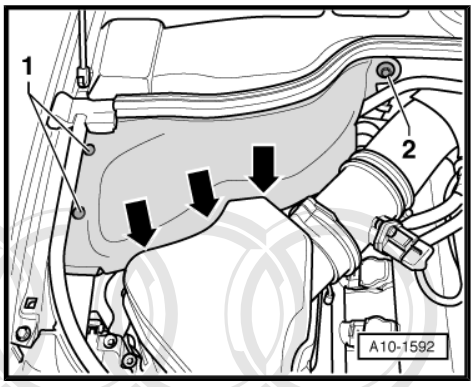

– Detach electrical connector -1-.
– Detach air intake hose -2- at air cleaner housing.
– Unscrew bolts -arrows- and remove air cleaner housing.

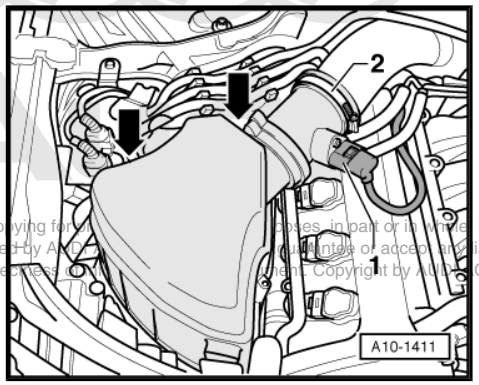

Protected by copyright. Copying for [illegible] purposes, in part or in whole, is not permitted unless authorised by Audi [illegible] authorities or accept any liability with respect to the correctness [illegible] Copyright by Audi AG.

Continuation for both sides:

– Unplug connector -arrow- at connector adapter.

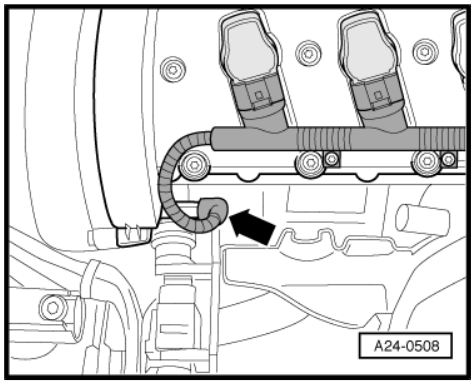

Note

The illustration shows cylinder bank 2 (left-side).

5.6 Checking internal resistance

Solenoid valve for camshaft adjustment (inlet):

– Connect multimeter (resistance test) between contacts -1- and -2-.

• Specification: 7.4 ... 8.2 Ω

Protected by copyright. Copying for private or commercial purposes, in part or in whole is not permitted unless authorised by AUDI AG. AUDI AG does not guarantee or accept any liability with respect to the correctness of information in this document. Copyright by AUDI AG.

Solenoid valve for camshaft adjustment (exhaust):

– Connect multimeter (resistance test) between contacts -2- and -3-.

• Specification: 12.8 ... 14.2 Ω

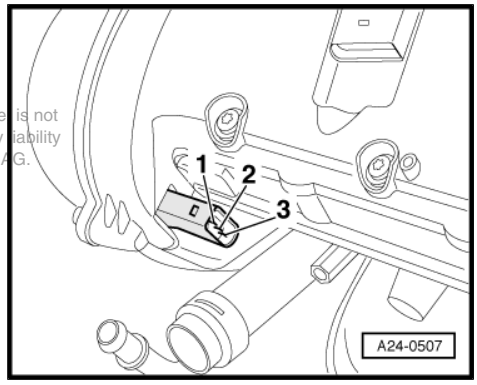

All models:

If specification is not reached:

– Renew relevant solenoid valve for camshaft adjustment.

5.7 Checking voltage supply

Note

Fuse for solenoid valves for camshaft adjustment OK ⇒ Current flow diagrams, Electrical fault finding and Fitting locations.

– Connect voltage tester -V.A.G 1527 B- as follows:

Connector Contact	Measure against
-2-	Engine earth

– Switch on ignition.

• The LED should light up.

– Switch off ignition.

If the LED does not light up:

– Use current flow diagram to check for open circuit in wiring from contact -2- of connector via fuse to motronic current supply relay -J271- .

– If necessary repair wiring connection.

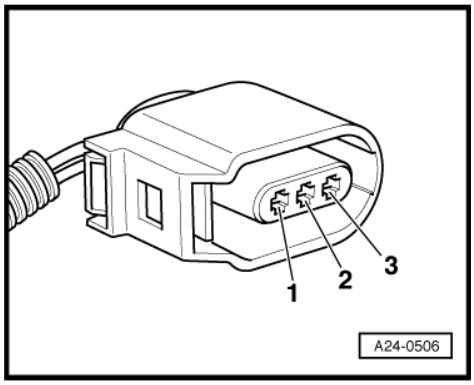

5.8 Checking activation

– Connect voltage tester -V.A.G 1527 B- as follows:

Solenoid valve for camshaft adjustment	Connector Contact
Inlet bank 1 -N205-	1 + 2
Inlet bank 2 -N208-	1 + 2
Exhaust bank 1 -N318-	2 + 3
Exhaust bank 2 -N319-	2 + 3

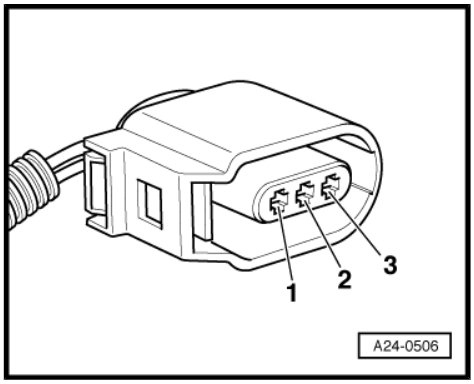

- Vehicle diagnostic, testing and information system - VAS 5051 A- with diagnosis lead -VAS 5051/5A- is connected; vehicle self-diagnosis and vehicle system “01 - Engine electronics” is selected. For this purpose, the ignition must be switched on.

Protected by copyright. Copying for private or commercial purposes, in part or in whole, is not permitted unless authorised by AUDI AG. AUDI AG does not guarantee or accept any liability with respect to the correctness and completeness of this document.

- Under selection menu -1- select the diagnostic function “03 - Final control diagnosis”.

– Press the button ⇨ until the relevant camshaft control valve is actuated.

- The LED should flash.

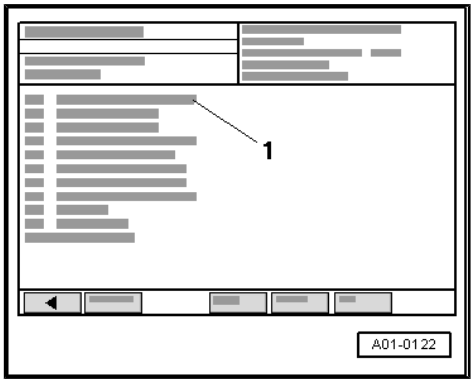

If the LED lamp does not flash or lights up continuously:

– Connect test box -V.A.G 1598/31- to connectors of wiring harness; do not connect engine control unit. Connect earth clip of test box to earth ⇒ Motronic injection and ignition system (6-cyl.); Rep. Gr. 24 .

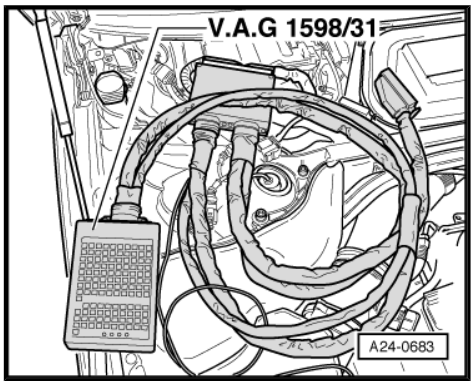

– Check for open circuit and short to positive or earth in the following wiring:

Solenoid valve for camshaft adjustment	Connector Contact	Test box - V.A.G 1598/31- Socket
Inlet bank 1 -N205-	1	115
Inlet bank 2 -N208-	1	120
Exhaust bank 1 -N318-	1	22
Exhaust bank 2 -N319-	1	18

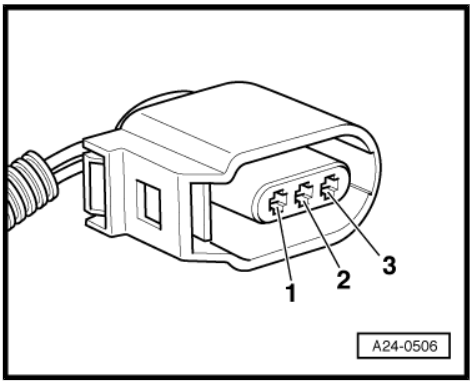

– If necessary repair wiring connection.

If the wiring is OK:

– Renew engine control unit.

If no fault is found:

– Renew the mechanical camshaft adjuster; see Removing and installing camshafts and camshaft adjuster ⇒ page 105 .

17 – Lubrication

1 Removing and installing parts of the lubrication system

Note

- *If large quantities of metal particles are found in the engine oil when repairing the engine, the oil passages must be cleaned carefully, and the oil cooler renewed in order to prevent further damage.*
- *The oil level must not be above Max. mark on dipstick – danger of damage to catalytic converter.*
- *Oil spray jet for piston cooling ⇒ page 144 .*

Viscosity grades and oil specifications ⇒ Maintenance ; Booklet 4E .

Oil capacities ⇒ Data sheets for exhaust emission test.

1.1 Sump (bottom section), oil pump - exploded view of components

1 - Seal
- ❑ Renew

2 - 10 Nm
- ❑ Tighten in stages and in diagonal sequence

3 - Sump (bottom section)
- ❑ Removing and installing ⇒ page 135

4 - 10 Nm

5 - Baffle plate (front)

6 - 22 Nm
- ❑ Renew

7 - 20 Nm + 90° (1/4 turn) further
- ❑ Renew
- ❑ When installing, fit new diamond-coated washer ⇒ Item 9 (page 134) between gear and chain sprocket

8 - Drive gear for balance shaft
- ❑ When installing, fit new diamond-coated washer ⇒ Item 9 (page 134) between gear and chain sprocket

9 - Diamond-coated washer
- ❑ Renew

10 - Drive chain for oil pump
- ❑ Removing and installing

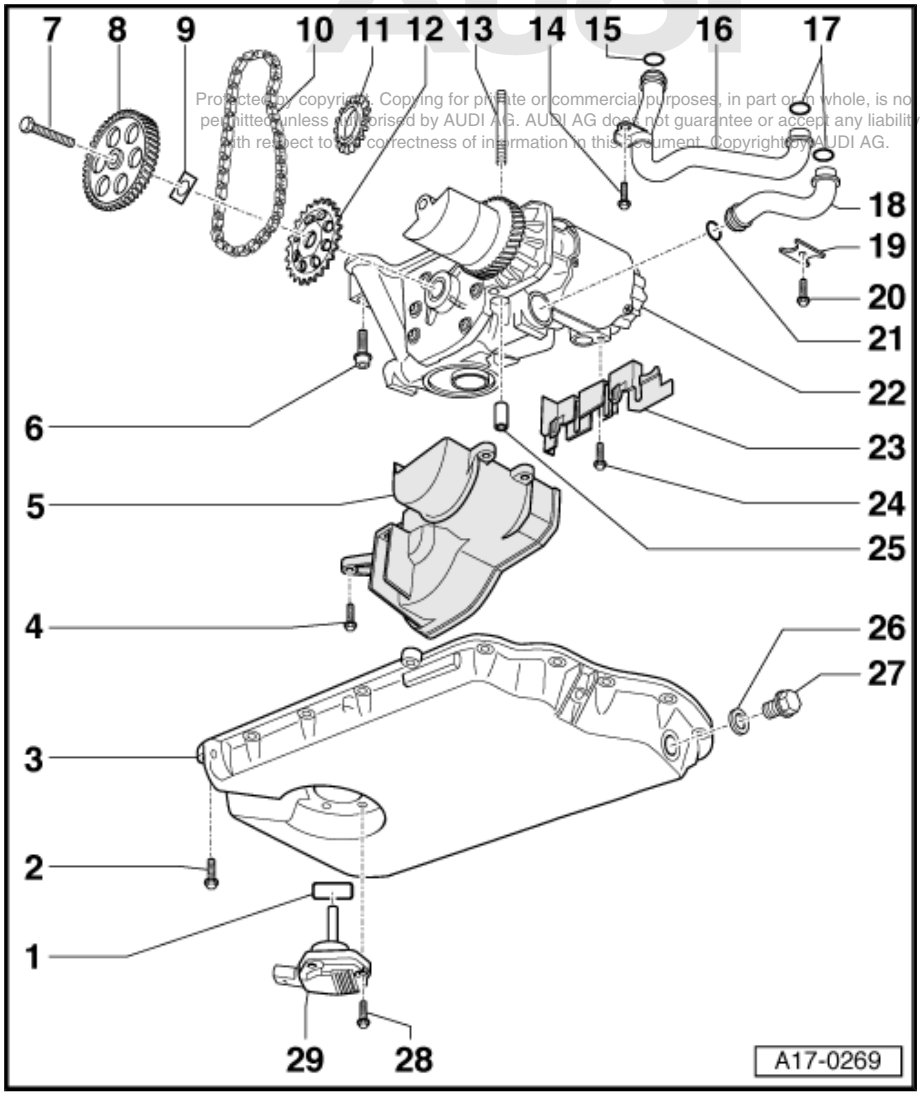

Protected by copyright. Copying for private or commercial purposes, in part or in whole, is not permitted unless authorised by AUDI AG. AUDI AG does not guarantee or accept any liability with respect to the correctness of information in this document. Copyright by AUDI AG.

⇒ page 156
- ❑ Chain tensioner for drive chain ⇒ Item 14 (page 143)

11 - Drive chain sprocket for oil pump
- ❑ Removing and installing ⇒ page 156

12 - Chain sprocket for oil pump
- ❑ Installation position: Inscription faces to the rear
- ❑ When installing, fit new diamond-coated washer ⇒ Item 9 (page 134) between gear and chain sprocket
- ❑ Removing and installing ⇒ page 138

13 - Stud
- ❑ Self-locking
- ❑ Shorter thread goes into cylinder block

Protected by copyright. Copying for private or commercial purposes, in part or in whole, is not permitted unless authorised by AUDI AG. AUDI AG does not guarantee or accept any liability with respect to the correctness of information in this document. Copyright by AUDI AG.

14 - 10 Nm

15 - O-ring
- ❑ Renew

16 - Oil pipe

17 - O-rings
- ❑ Renew

18 - Oil pipe

19 - Bracket for oil pipes

20 - 10 Nm

21 - O-ring
- ❑ Renew

22 - Oil pump
- ❑ With balance shaft
- ❑ Removing and installing ⇒ page 138

23 - Baffle plate (rear)

24 - 10 Nm
- ❑ Self-locking
- ❑ Renew

25 - 20 Nm +120° ($^1/_3$ turn) further
- ❑ Renew
- ❑ Apply locking fluid when fitting
- ❑ Locking fluid ⇒ Parts List

26 - Seal
- ❑ Renew

27 - Oil drain plug -30 Nm-

28 - 10 Nm

29 - Oil level/oil temperature sender -G266-

1.2 Removing and installing sump (bottom section)

Special tools and workshop equipment required

- ♦ Drip tray
- ♦ Electric drill with plastic brush attachment

- Safety goggles
- Silicone sealant ⇒ Parts catalogue

Removing

– Activate jacking mode ⇒ Running gear, front-wheel drive and four-wheel drive; Rep. Gr. 43 ; Operating the air suspension .

– Vehicles with auxiliary heater: remove bolts -arrows- securing exhaust pipe for auxiliary/additional heater to noise insulation.

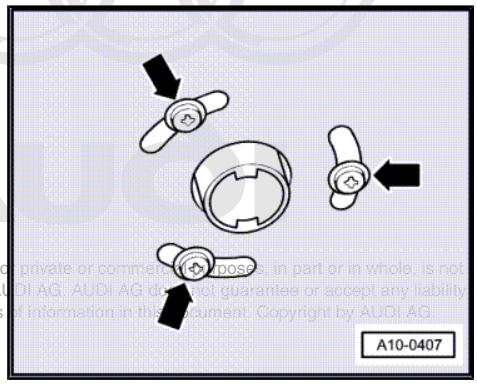

Protected by copyright. Copying for private or commercial purposes, in part or in whole, is not permitted unless authorised by AUDI AG. AUDI AG does not guarantee or accept any liability with respect to the correctness of information in this document. Copyright by AUDI AG.

– Loosen quick release fasteners -1- and remove front noise insulation.

– Place drip tray below engine.

– Drain engine oil.

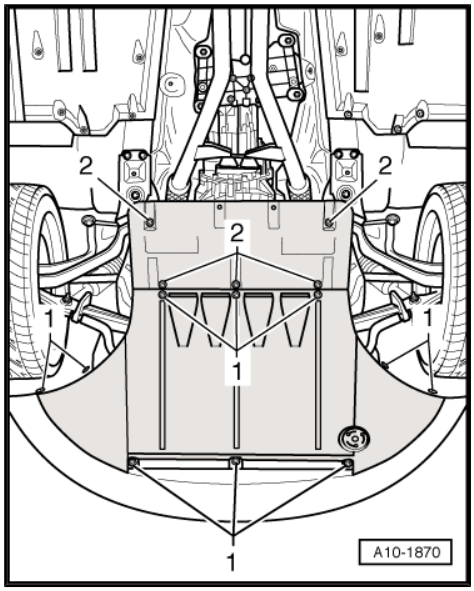

– Unscrew bracket for ATF line (right-side) at bottom section of sump -arrow-.

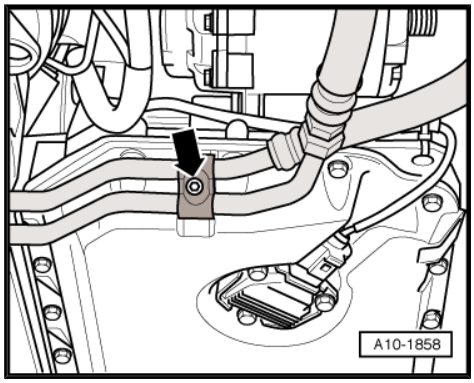

– Unplug electrical connector at oil level/oil temperature sender -G266- -arrow- and move wire clear.

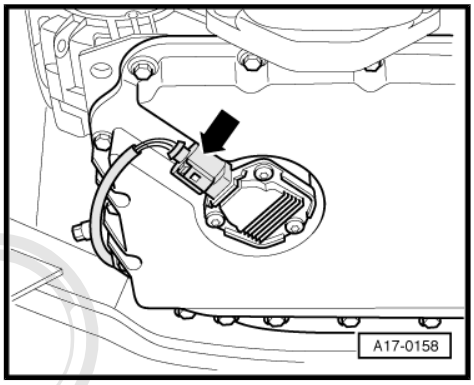

– Place drip tray under the engine (more oil will come out).
– Unbolt sump (bottom section) -1- and carefully remove.

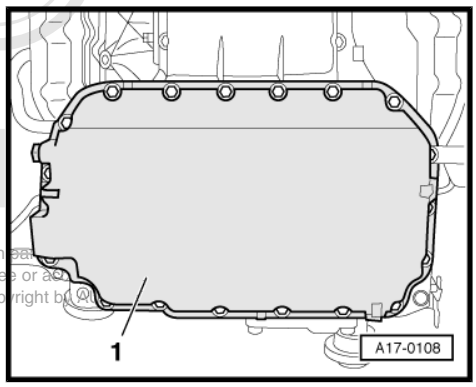

Installing

Installation is carried out in the reverse order; note the following:

Note

Protected by copyright. Copying for private or commercial purposes, in part, is not permitted unless authorised by AUDI AG. AUDI AG does not guarantee or accept any liability with respect to the correctness of information in this document. Copyright by AUDI AG.

Renew seals and gaskets.

– Remove remaining sealant on bottom and top section of sump with a rotating plastic brush or similar.

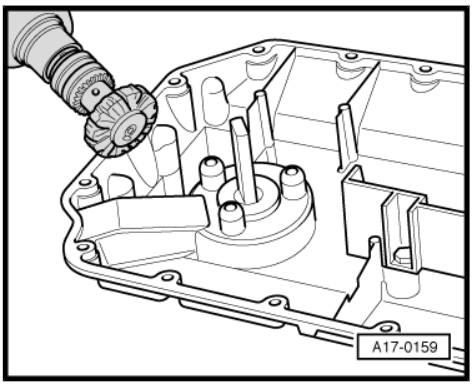

WARNING

Wear safety goggles.

– Clean sealing surfaces; they must be free of oil and grease.

– Cut off nozzle of tube at front marking (∅ of nozzle approx. 1 mm).

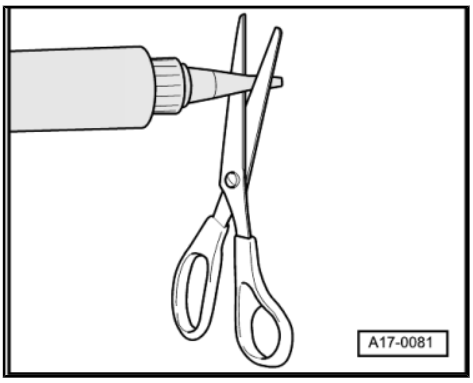

– Apply bead of silicone sealant onto the clean sealing surface of the sump (bottom section), as illustrated.

• The bead of sealant should be approx. 1.5 mm wide -arrow-.

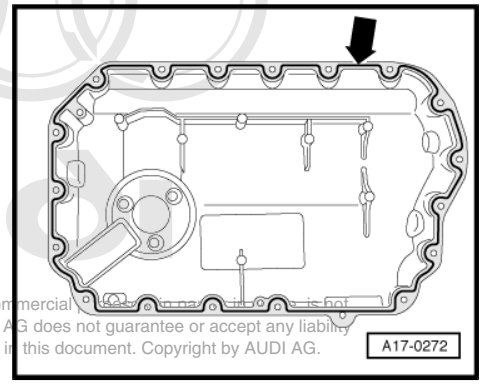

Note

♦ *The sealant bead must not be thicker than specified, otherwise excess sealant could enter the sump and clog the strainer in the oil pump.*

♦ *The sump (bottom section) must be installed within 5 minutes after applying the silicone sealant.*

Protected by copyright. Copying for private or commercial purposes, in part or in whole, is not permitted unless authorised by AUDI AG. AUDI AG does not guarantee or accept any liability with respect to the correctness of information in this document. Copyright by AUDI AG.

– Fit sump (bottom section) and tighten all bolts initially to 5 Nm in diagonal sequence.

– Tighten bolts securing sump (bottom section) to 10 Nm in diagonal sequence.

– Fill up with engine oil and check oil level ⇒ page 161 .

– Deactivate jacking mode ⇒ Running gear, front-wheel drive and four-wheel drive; Rep. Gr. 43 ; Operating the air suspension .

Tightening torques

Component	Nm
Sump (bottom section) to sump (top section)	10
Oil drain plug	30

1.3 Removing and installing oil pump

Special tools and workshop equipment required

♦ Puller -T10055-

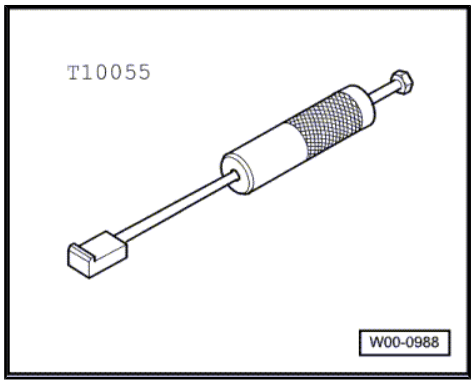

♦ Locking pin -T40026-

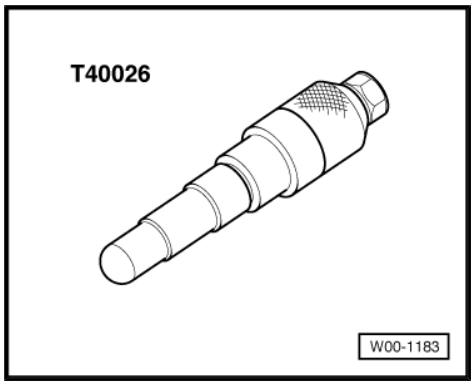

♦ Drill, ∅ 3 mm

- Drip tray
- Sealant ⇒ Parts catalogue
- Locking fluid ⇒ Parts List

Removing

– Activate jacking mode ⇒ Running gear, front-wheel drive and four-wheel drive; Rep. Gr. 43 ; Operating the air suspension .

– Vehicles with auxiliary heater: remove bolts -arrows- securing exhaust pipe for auxiliary/additional heater to noise insulation.

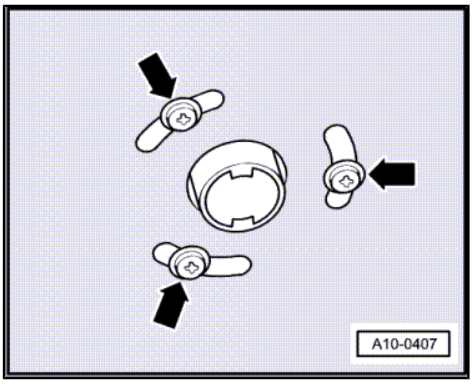

– Loosen quick release fasteners -1- and remove front noise insulation.

– Place drip tray below engine.

– Drain off engine oil.

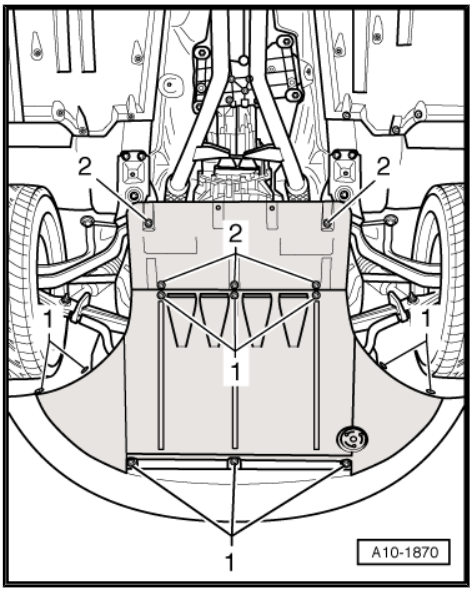

Protected by copyright. Copying for private or commercial purposes, in part or in whole, is not permitted unless authorized by AUDI AG. Technical data/specifications and other information are without guarantee with respect to correctness of information in this document. Copyright by AUDI AG.

– Unscrew bracket for ATF line (right-side) at bottom section of sump -arrow-.

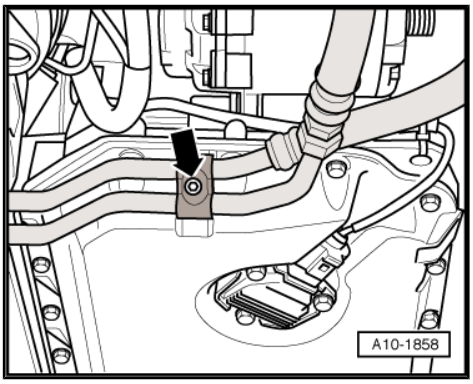

– Unplug electrical connector at oil level and oil temperature sender -G266- -arrow- and move wire clear.

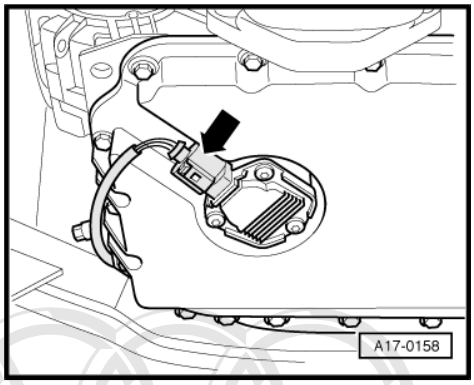

– Place drip tray under the engine (more oil will come out).
– Unbolt sump (bottom section) -1- and carefully remove.

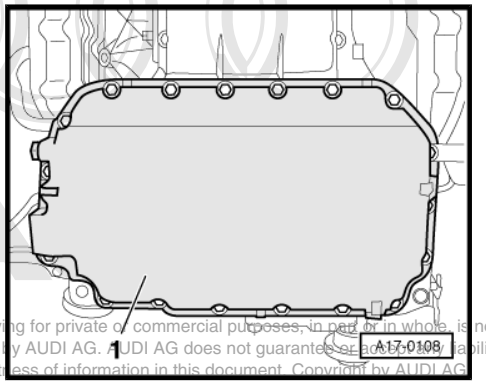

Protected by copyright. Copying for private or commercial purposes, in part or in whole, is not permitted unless authorised by AUDI AG. AUDI AG does not guarantee or accept any liability with respect to the correctness of information in this document. Copyright by AUDI AG.

– Set crankshaft to markings for TDC of No. 3 cylinder by turning central bolt on crankshaft sprocket in normal direction of rotation.
• Notch -1- should align with marking -2-.

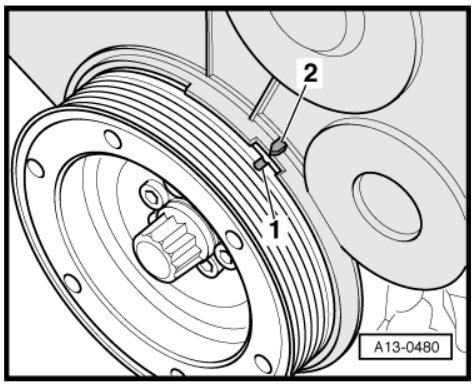

– Unscrew plug for TDC marking from cylinder block.
– Screw locking pin -T40026- into hole where plug has been removed and tighten.

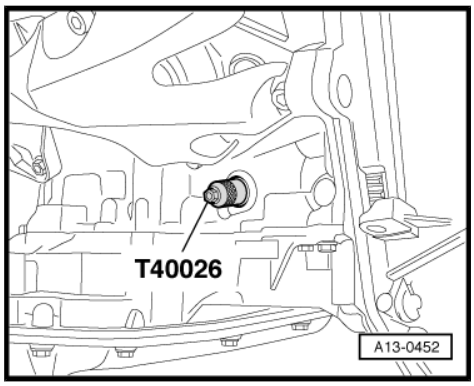

Note

If necessary, turn crankshaft slightly backwards and forwards.

– Unscrew bolts -3- and -6- and remove oil pipes.

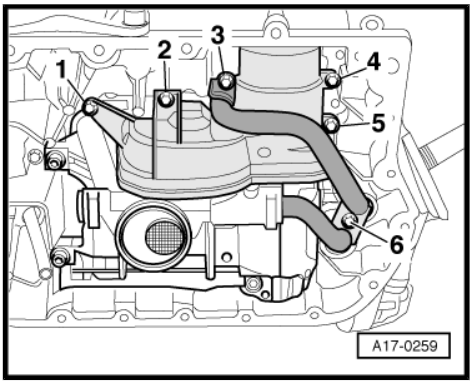

Note

Some oil will come out when oil pipes are removed.

– Unscrew bolts -1-, -2-, -4- and -5- and remove baffle plate (front).

– Unscrew bolt -4- and remove drive gear -3- for balance shaft.
– Remove diamond-coated washer from drive gear.
– Unscrew bolts -1- and -2- and nuts -5- and -6-.

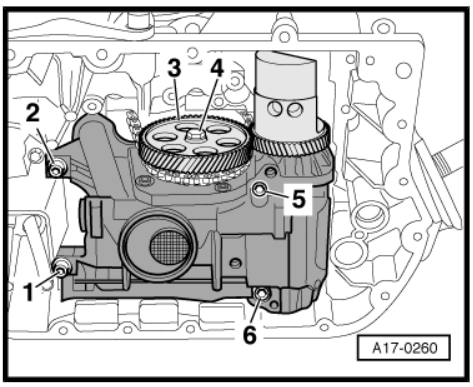

Protected by copyright. Copying for private or commercial purposes, in part or in whole, is not permitted unless authorised by AUDI AG. AUDI AG does not guarantee or accept any liability with respect to the correctness of information in this document. Copyright by AUDI AG.

– Screw puller -T10055- into M8 holes -arrows- on oil pump in alternating sequence and pull oil pump off of cylinder block.

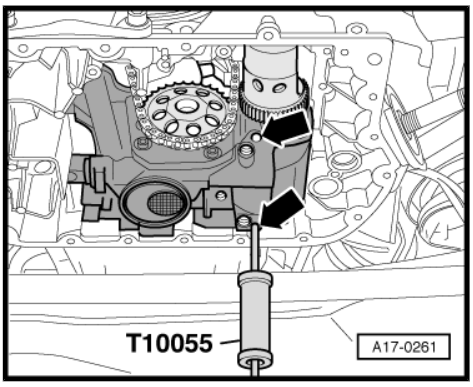

Installing

Installation is carried out in the reverse order; note the following:

Note

Renew gaskets, seals and O-rings.

– Clean remaining locking fluid off threads of studs -3-.
– Renew O-ring -arrow 1-.
– Apply sealant around hole -arrow 2-.

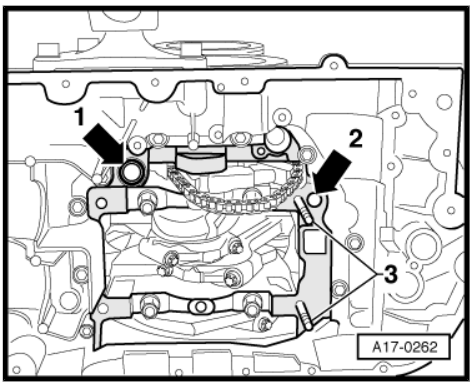

– Renew bolts -1- and -2- and nuts -5- and -6- securing oil pump.
– Apply locking fluid to nuts -5- and -6- before installing.
– Tighten all four oil pump mountings uniformly to ensure that dowel pin goes in squarely.
– Tighten mountings to final torque.
– Renew diamond-coated washer on drive gear for balance shaft -3-.
– Insert flange of drive gear (for balance shaft) through chain sprocket and onto oil pump shaft.
– Screw in bolt -4- but do not tighten.

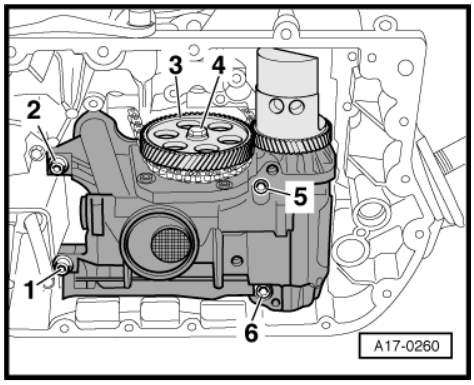

Note

To install drive gear, press back piston of chain tensioner using a screwdriver -arrow-.

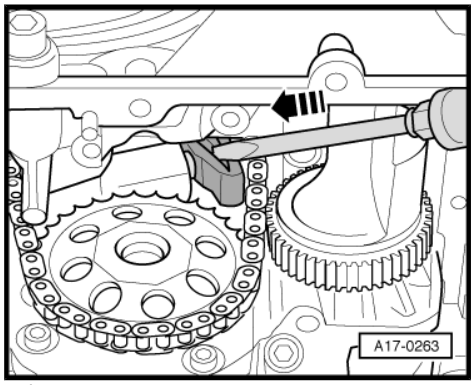

Protected by copyright. Copying for private or commercial purposes, in part or in whole, is not permitted unless authorised by AUDI AG. AUDI AG does not guarantee or accept any liability with respect to the correctness of information in this document. Copyright by AUDI AG.

– Turn balance shaft -2- until a ∅ 5 mm pin -Item 3- (e.g. drill bit or similar) can be inserted in locating hole.
– Tighten bolt for gear -1-.
– Pull pin (drill bit) out of locating hole.
– Remove locking pin -T10026- and screw plug for TDC marking into cylinder block together with new O-ring.

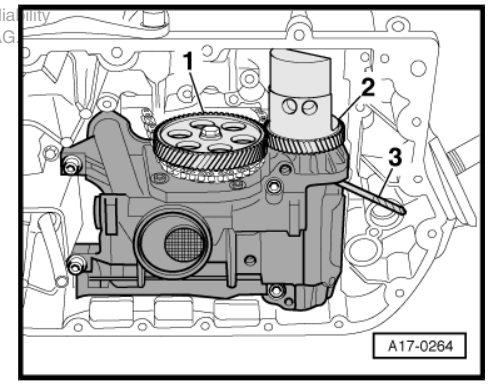

– Install baffle plate (front): bolts -1-, -2-, -4- and -5-.
– Install oil pipes: bolts -3- and -6-.
– Install sump (bottom section) ⇒ page 135 .

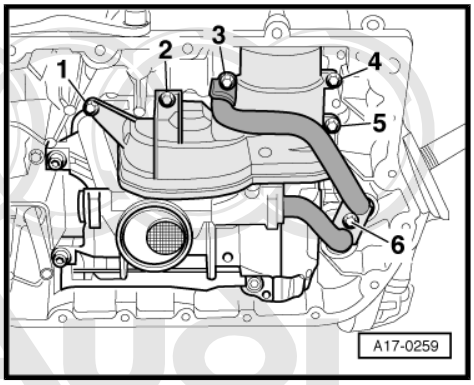

Tightening torques

Component		Nm
Oil pump to	Nuts	20 + 120° [16] [17]
cylinder block	Bolts	22 [18]
Drive gear for balance shaft to oil pump		20 + 90° [18] [19]
Baffle plate (front) to sump (top section)		10
Oil pressure pipe to sump (top section)		10
Sealing plug in cylinder block		25

Protected by copyright. Copying for private or commercial purposes, in part or in whole, is not permitted unless authorised by AUDI AG. AUDI AG does not guarantee or accept any liability with respect to the correctness of information in this document. Copyright by AUDI AG.

16) 120° equals 1/3 turn.

17) Apply locking fluid to nuts; locking fluid ⇒ Parts catalogue .

18) Renew bolts.

19) 90° equals a quarter of a turn.

1.4 Sump (top section), oil filter - exploded view of components

1 - Torque reaction support

2 - 40 Nm

3 - Seal
- ❑ Renew

4 - Oil pressure switch - F1- , 1.4 bar -25 Nm-
- ❑ Black insulation
- ❑ Checking ⇒ page 159
- ❑ Renew seal

5 - 12 Nm

6 - Washer

7 - O-rings
- ❑ Renew

8 - Seal
- ❑ Renew

9 - Screw plug -10 Nm-

10 - Oil seal
- ❑ For crankshaft
- ❑ Removing and installing ⇒ page 40

11 - 10 Nm

12 - 30 Nm
- ❑ Self-locking
- ❑ Renew

13 - Sealing flange (front)
- ❑ Removing and installing ⇒ page 42

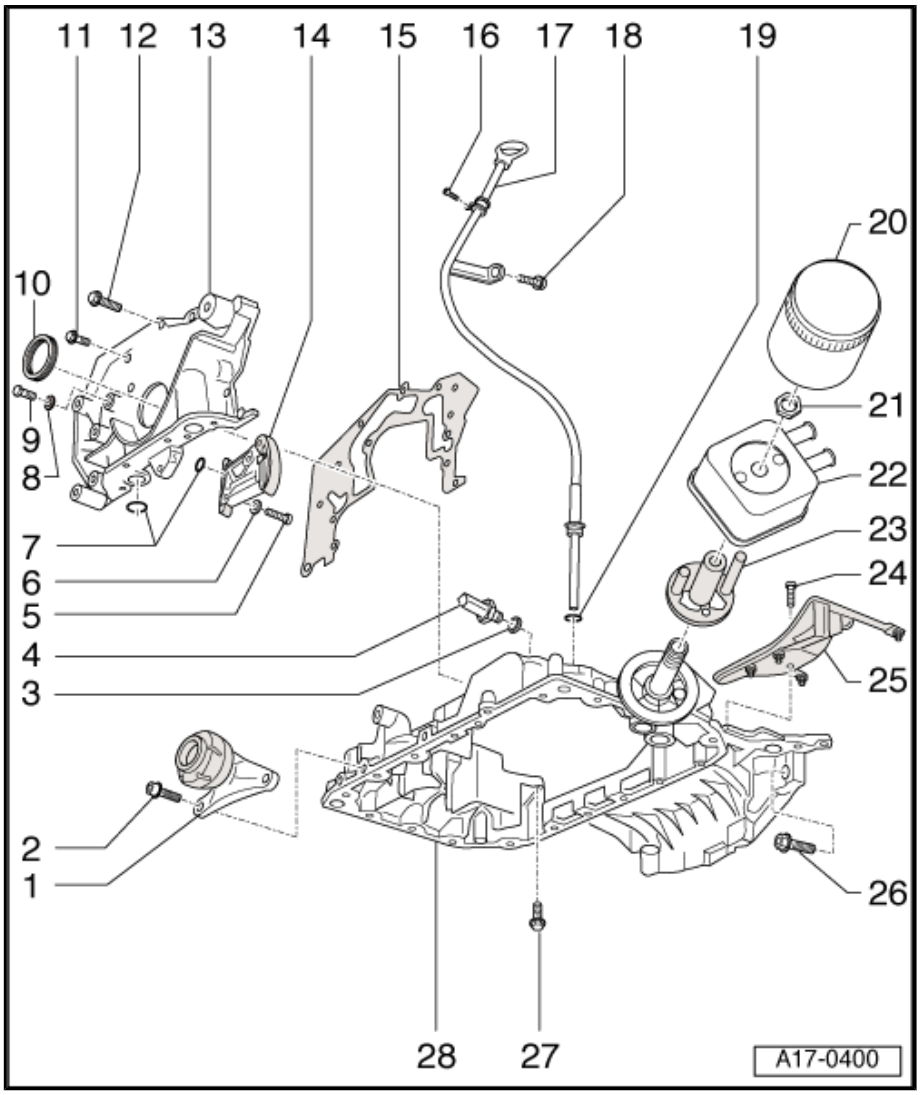

14 - Chain tensioner

- ❑ Removing and installing ⇒ page 156
- ❑ Insert ∅ 3 mm drill bit to hold in position

15 - Gasket

- ❑ Renew

16 - Panel bolt

17 - Guide tube for oil dipstick

18 - 10 Nm

19 - O-ring

- ❑ Renew

Protected by copyright. Copying for private or commercial purposes, in part or in whole, is not permitted unless authorised by AUDI AG. AUDI AG does not guarantee or accept any liability with respect to the correctness of information in this document. Copyright by AUDI AG.

20 - Oil filter

- ❑ Observe change intervals ⇒ Maintenance ; Booklet 4E
- ❑ Loosen with oil filter wrench -3417-
- ❑ Observe installation instructions on oil filter
- ❑ Tighten to 20 Nm

21 - 30 Nm

22 - Oil cooler

- ❑ See note ⇒ page 134

23 - Guide piece

- ❑ With seal
- ❑ Renew

24 - 10 Nm

- ❑ Self-locking
- ❑ Renew

25 - Baffle plate (top)

26 - 45 Nm

27 - M7 = 16 Nm M8 = 22 Nm

28 - Sump (top section)

- ❑ Removing and installing ⇒ page 145

Oil spray jet for piston cooling

1 - Bolt -10 Nm-

2 - Oil spray jet for piston cooling

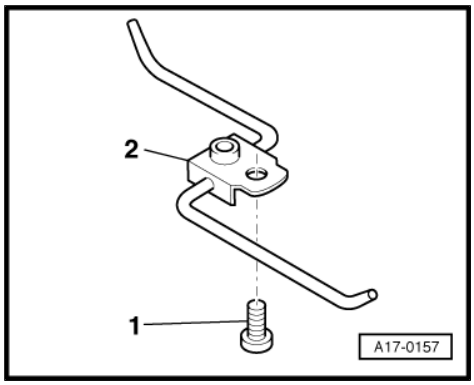

1.5 Removing and installing sump (top section)

Special tools and workshop equipment required

- Support bracket -10-222 A-
- Support -10-222 A/21-
- Lifting tackle -2024 A-
- Hose clamps for hoses up to 25 mm Ø -3094-
- Drip tray -V.A.G 1306-
- Drip tray
- Electric drill with plastic brush attachment
- Safety goggles
- Silicone sealant ⇒ Parts catalogue

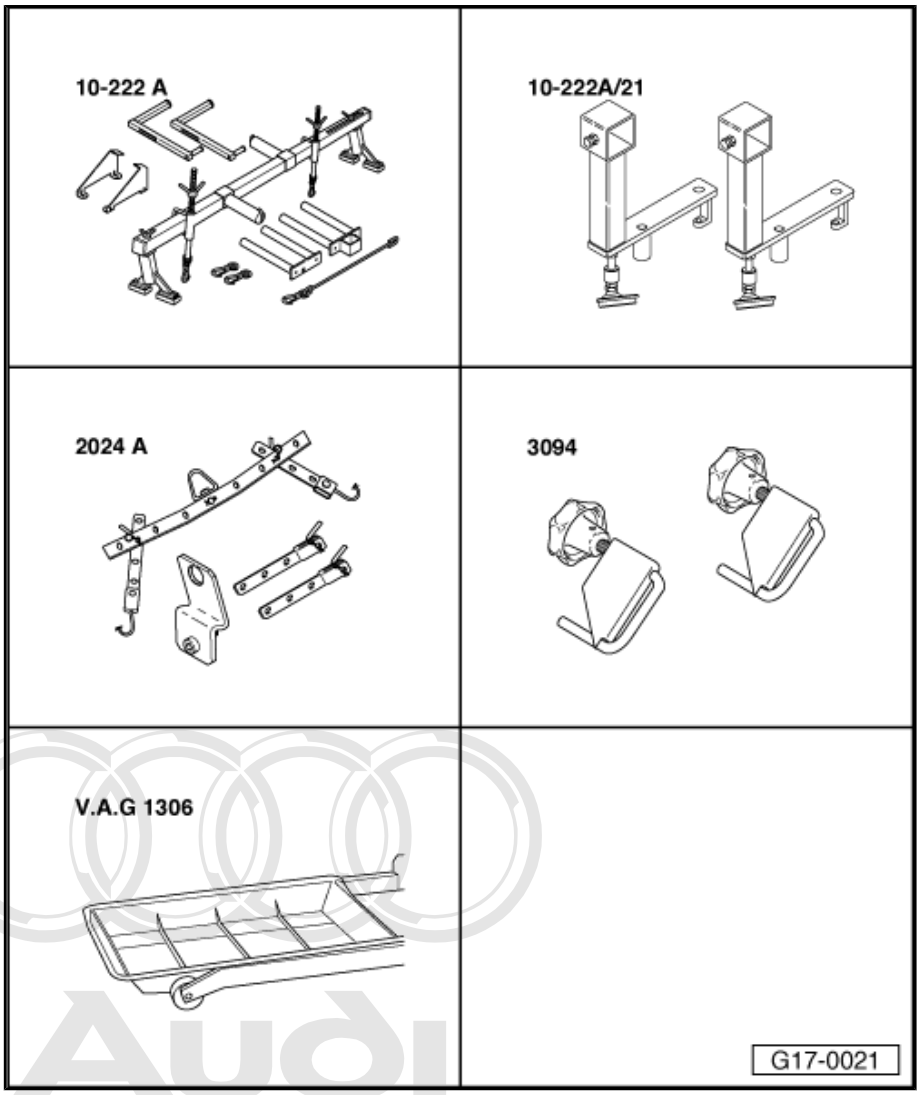

Protected by copyright. Copying for private or commercial purposes, in part or in whole, is not permitted unless authorised by AUDI AG. AUDI AG does not guarantee or accept any liability with respect to the correctness of information in this document. Copyright by AUDI AG.

Removing

Note

All cable ties which are released or cut open when removing must be fitted in the same position when installing.

– Activate jacking mode ⇒ Running gear, front-wheel drive and four-wheel drive; Rep. Gr. 43 ; Operating the air suspension .

WARNING

Observe notes on procedure for disconnecting the battery ⇒ Electrical system; Rep. Gr. 27 .

– Switch off ignition.

– Remove luggage compartment side trim cover (right-side) -arrows-.

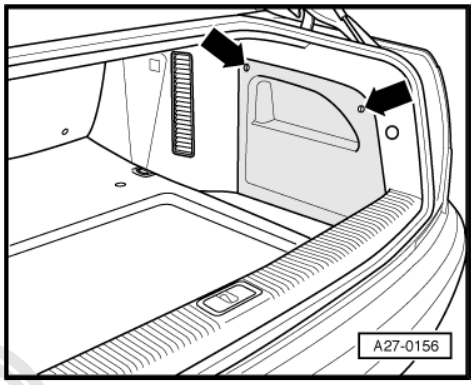

– Remove cover -1- over battery.

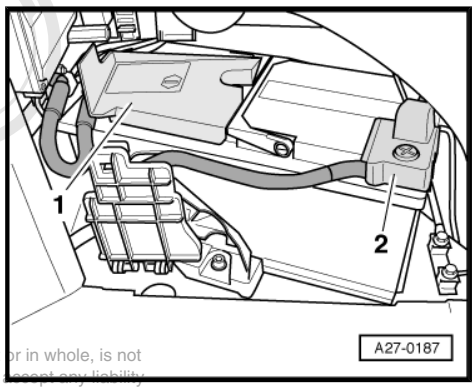

Note

Ignore item marked -2-.

Protected by copyright. Copyright by AUDI AG.

– Disconnect earth cable -arrow- at battery.

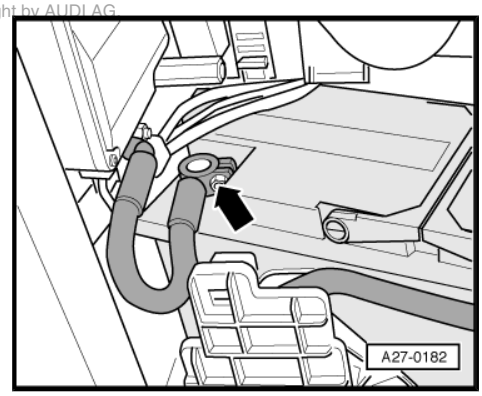

– Vehicles with auxiliary heater: remove bolts -arrows- securing exhaust pipe for auxiliary/additional heater to noise insulation.

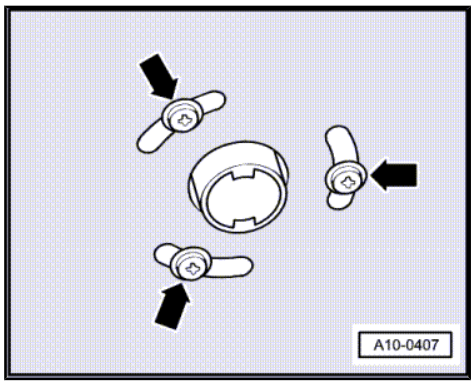

– Loosen quick release fasteners -1- and -2- and remove noise insulation parts.

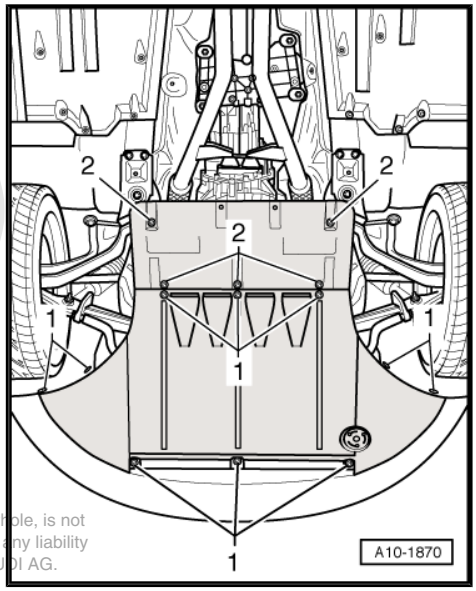

Protected by copyright. Copying for private or commercial purposes, in part or in whole, is not permitted unless authorised by AUDI AG. AUDI AG does not guarantee or accept any liability with respect to the correctness of information in this document. Copyright by AUDI AG.

– Unbolt bracket for noise insulation -arrows-.

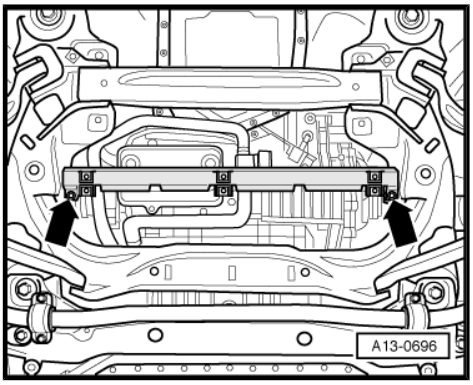

– Unbolt cross piece at lock carrier -arrows-.

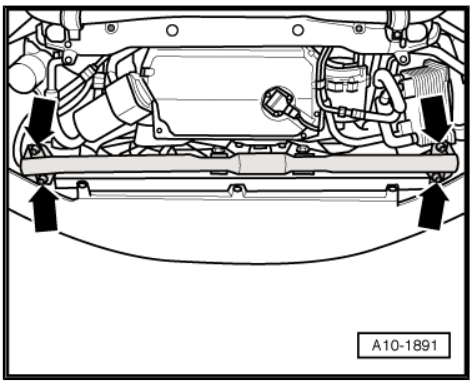

– Unbolt cross piece at stop for torque reaction support -arrows- and remove.

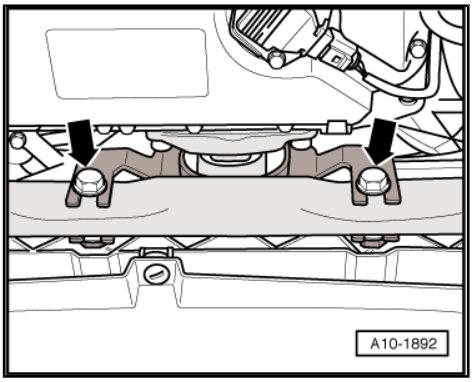

– Unscrew torque reaction support -arrows- and remove together with stop for torque reaction support.

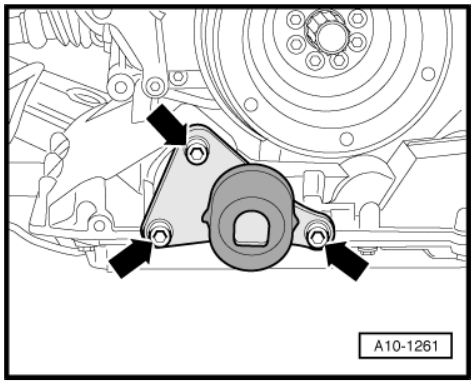

– Place drip tray below engine.
– Drain engine oil.
– Loosen oil filter -arrow-.

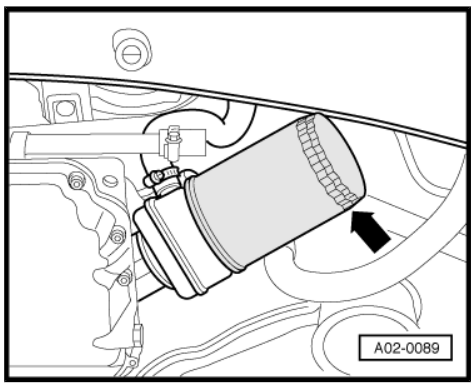

Protected by copyright. Copying for private or commercial purposes, in part or in whole, is not permitted unless authorised by AUDI AG. AUDI AG does not guarantee or accept any liability with respect to the correctness of information in this document. Copyright by AUDI AG.

– Place container -V.A.G 1306- under engine.
– Clamp off coolant hoses -2- and -3- using hose clamps -3094- .
– Disconnect coolant hoses from oil cooler -1-.
– Remove oil cooler.

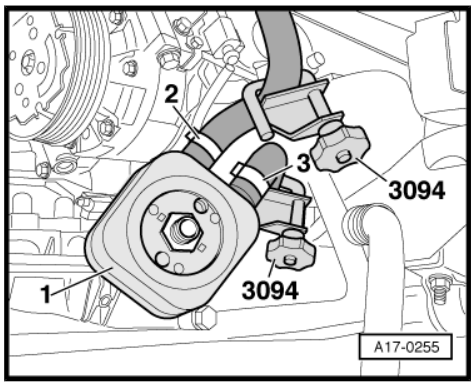

– Unplug electrical connector -arrow- at oil pressure switch -F1- .

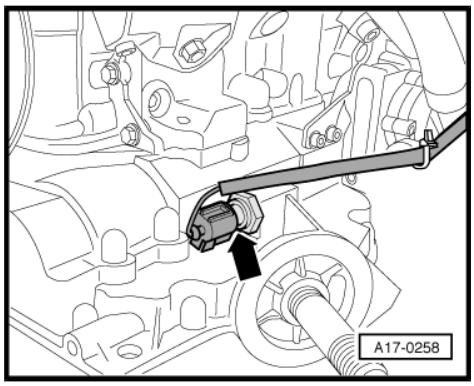

– Unscrew bracket for ATF line (right-side) at bottom section of sump -arrow-.

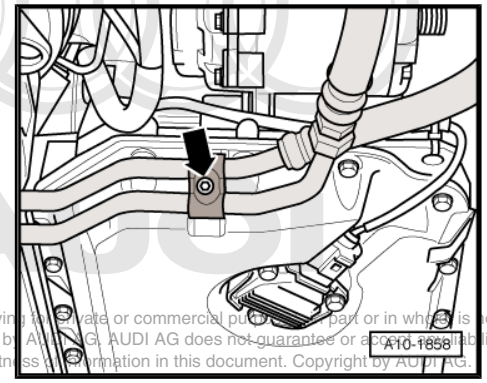

Protected by copyright. Copying for private or commercial purposes, in part or in whole is not permitted unless authorised by AUDI AG. AUDI AG does not guarantee or accept any liability with respect to the correctness of information in this document. Copyright by AUDI AG.

– Unplug electrical connector -arrow- at oil level/oil temperature sender -G266- and move wire clear.

– Place drip tray below engine.

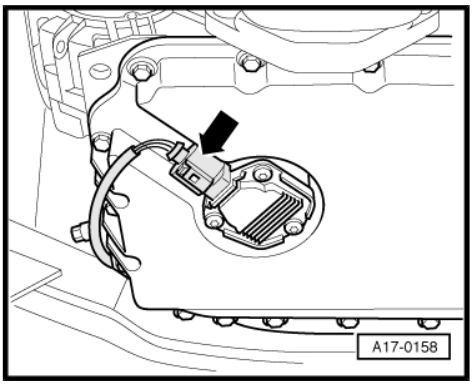

– Unbolt sump (bottom section) -1- and carefully remove.

– Remove oil pump ⇒ page 138 .

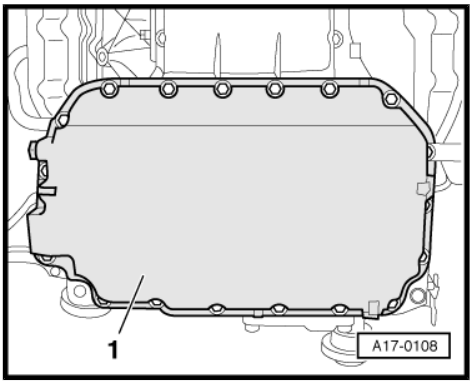

– Unbolt heat shield -1- for drive shaft (right-side) from gearbox.

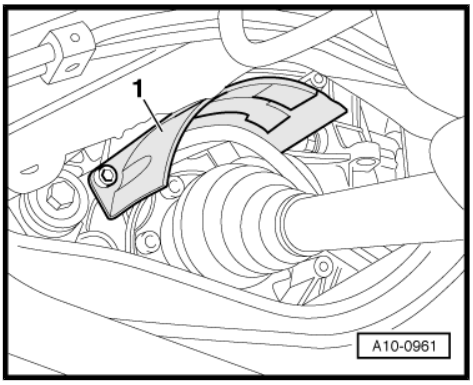

– Unscrew securing bolts -arrows- for starter, push starter forwards and tie up to side.

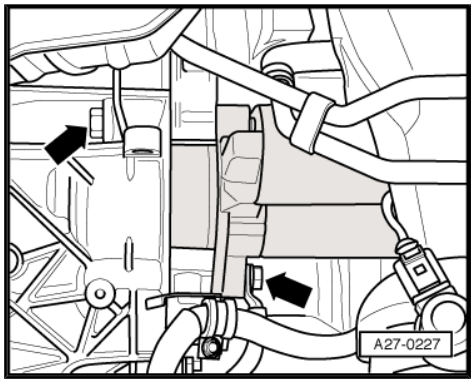

– Unscrew bolt -arrow- and remove bracket for wiring harness from sump (top section).
– Move wiring harness at sump (top section) clear.

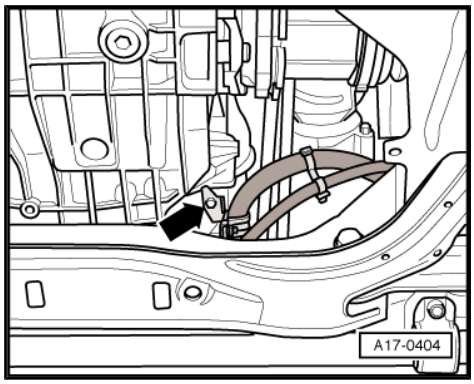

– Remove bolts -arrows- for engine mounting (left and right-side)

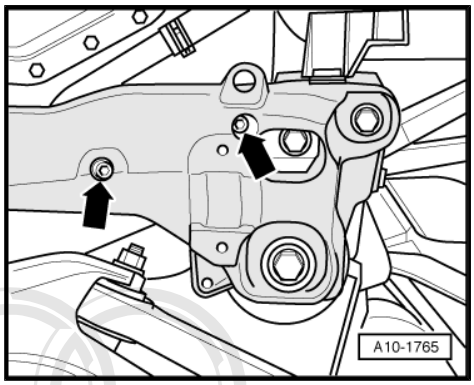

– Detach hose -arrow- to secondary air pump at bottom of air cleaner housing.

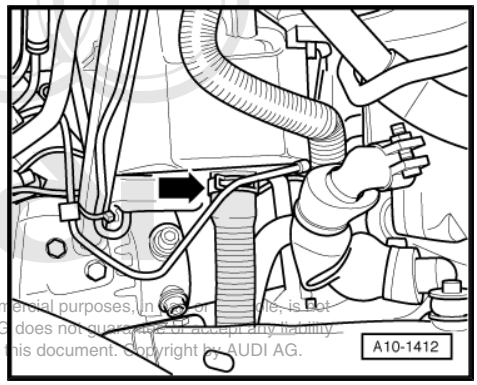

Protected by copyright. Copying for private or commercial purposes, in whole or in part, is not permitted unless authorised by AUDI AG. AUDI AG does not guarantee or accept any liability with respect to the correctness of information in this document. Copyright by AUDI AG.

– Pull off rear engine cover -arrows-.

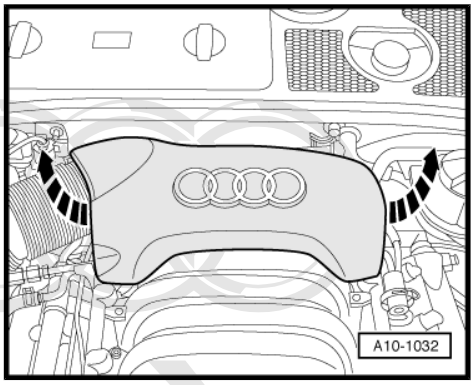

– Remove cover for suspension turret (right-side); to do so, detach spreader clips -1- and unscrew nut -2-.
– Pull cover out of retainers -arrows-.

Protected by copyright. Copying for private or commercial purposes, in part or in whole, is not permitted unless authorised by AUDI AG. AUDI AG does not guarantee or assume any liability with respect to the correctness of information in this document.

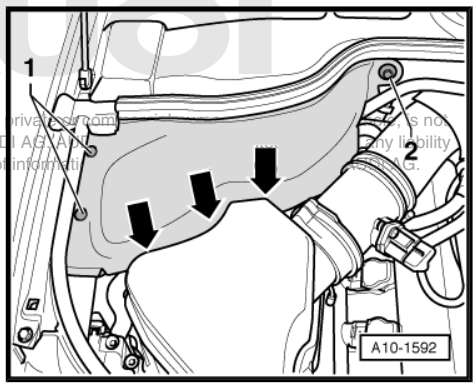

– Detach electrical connector -1-.
– Detach air intake hose -2- at air cleaner housing.
– Unscrew bolts -arrows- and remove air cleaner housing.

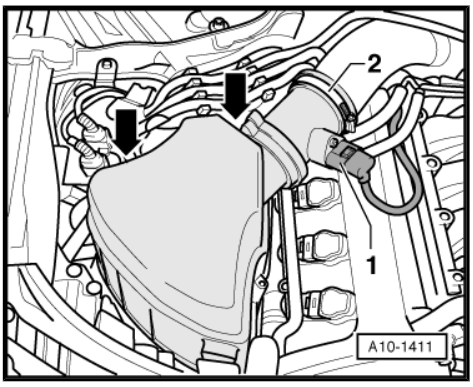

– Unscrew bolts -1- and -3-.
– Disconnect hose -4- at pipe for secondary air.
– Pull guide tube -2- for oil dipstick upwards out of top section of sump and fold forwards.

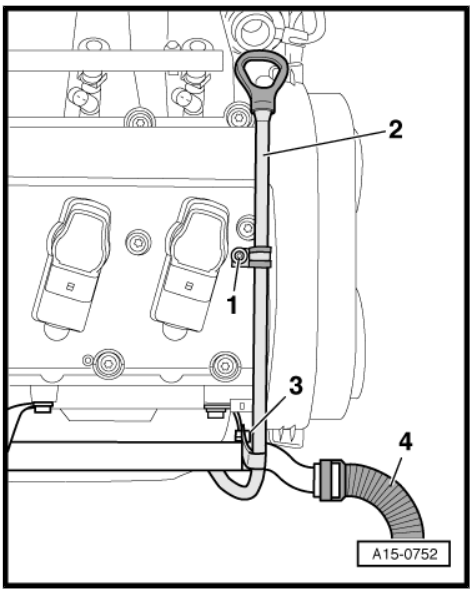

– Pull off rubber seal -1- on plenum chamber covers.
– Detach plenum chamber covers -2- and -3-.
– Remove cover for suspension turret (left-side); to do so, detach spreader clip -2- and unscrew nuts -1-.

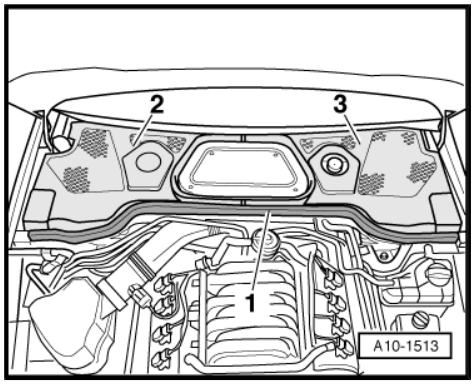

– Unscrew bolt -arrow- and move bracket for refrigerant line to side.

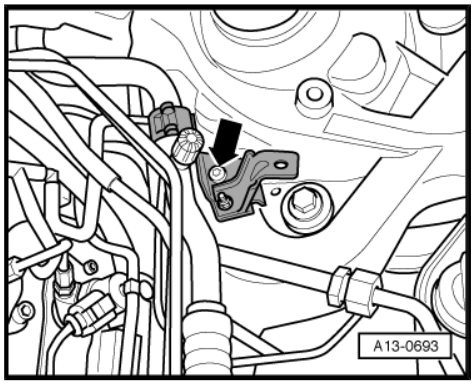

Note

To prevent damage to the refrigerant lines, ensure that the pipes and hoses are not stretched, kinked or bent.

– Detach electrical connectors -1-and -2- from bracket and unplug.

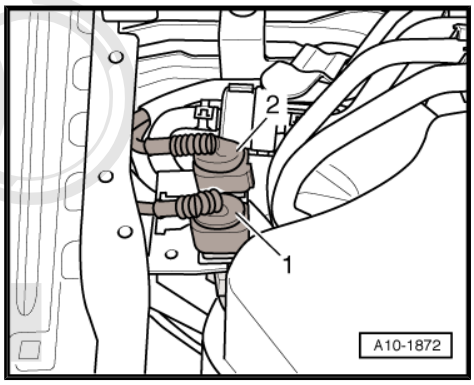

Protected by copyright. Copying for private or commercial purposes, in part or in whole, is not permitted unless authorised by AUDI AG. AUDI AG does not guarantee or accept any liability with respect to the correctness of information in this document. Copyright by AUDI AG.

– Disconnect electrical connector -1- at solenoid valve 1 for activated charcoal filter system -N80-
– Move wiring harness clear.
– Disconnect hose -2- at solenoid valve 1 for activated charcoal filter system -N80- and move clear.

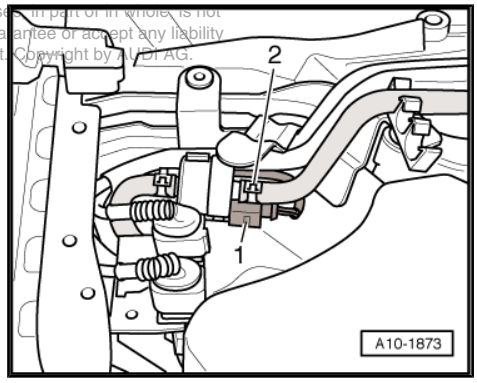

– Unscrew rear bolts -3- for body brace.

– Attach the support bracket -10-222 A- with supports -10-222 A/21- onto the suspension turrets.

• The spindle of support bracket is located at front.

• Supports are marked for left and right-side of vehicle.

• The centre resting point -2- of supports is positioned on front bolts for body brace.

• The supports -10-222 A/21- are attached to the rear securing bolts -3- for body brace.

• The knurled screws -1- must be screwed far enough down so that support plate rests on suspension turret.

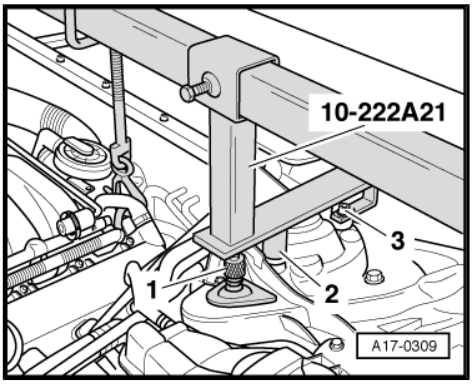

– Remove eyelets of lifting tackle -2024 A- .

– Reinsert pin -1- in centre hole in lifting tackle and secure with split pin.

– Hang the pin of lifting tackle -2024 A- onto the spindle of support bracket -10-222 A- .

– Engage lifting tackle -2024 A- in lifting eyes (left and right-side) on engine.

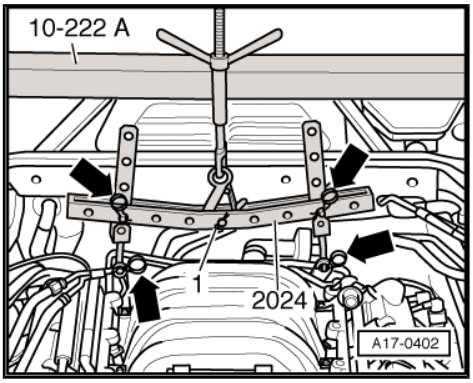

WARNING

The support hooks and retaining pins on the lifting tackle must be secured with locking pins -arrows-.

Protected by copyright. Copying for private or commercial purposes, in part or in whole, is not permitted unless authorised by AUDI AG. AUDI AG does not guarantee or accept any liability with respect to the correctness of information in this document. Copyright by AUDI AG.

– Raise engine with spindle of support bracket -10-222 A- until the engine mountings are -a- = 35 mm over the engine supports.

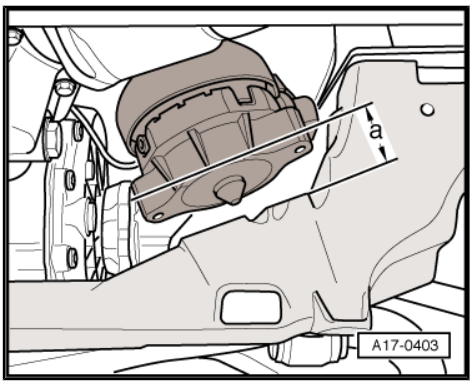

– Unscrew bolts -arrows- securing engine to gearbox near sump (top section).

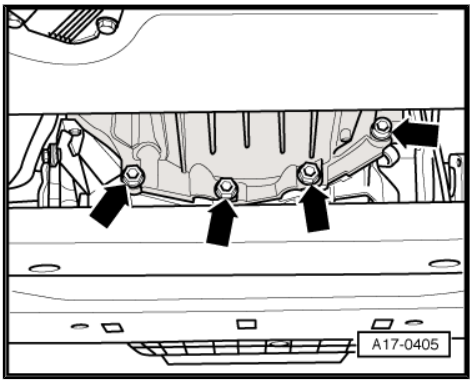

– Unscrew bolts -1- and -2- for sump (top section).
– Press sump (top section) off spring pins on cylinder block.
– Lower sump (top section), move to left and remove towards front.

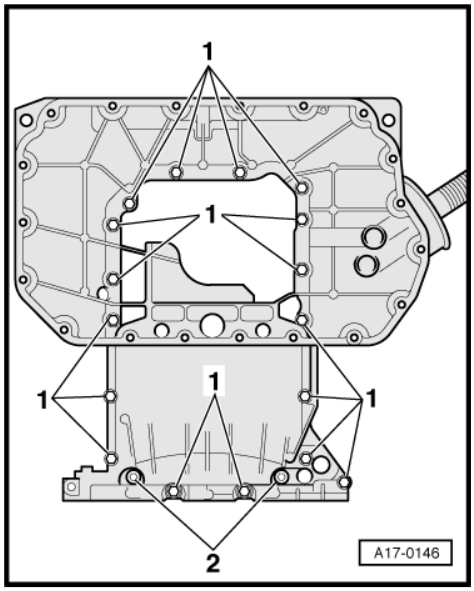

Installing

Installation is carried out in the reverse order; note the following:

Note

- *Renew gaskets, seals and O-rings.*
- *All cable ties which are released or cut open when removing must be fitted in the same position when installing.*
- *Secure all hose connections with the correct type of hose clips (same as original equipment) ⇒ Parts catalogue.*

– Remove remaining sealant on sump (top section) and cylinder block using rotating plastic brush or similar.

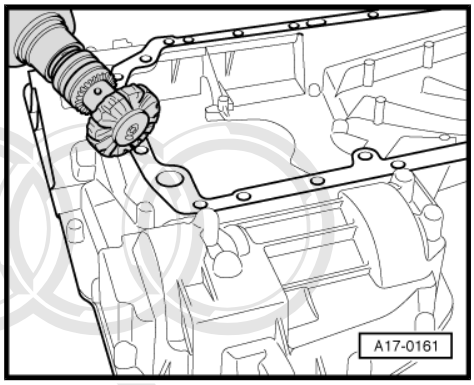

WARNING

Wear safety goggles.

– Clean sealing surfaces; they must be free of oil and grease.

– Cut off nozzle of tube at front marking (∅ of nozzle approx. 1 mm).

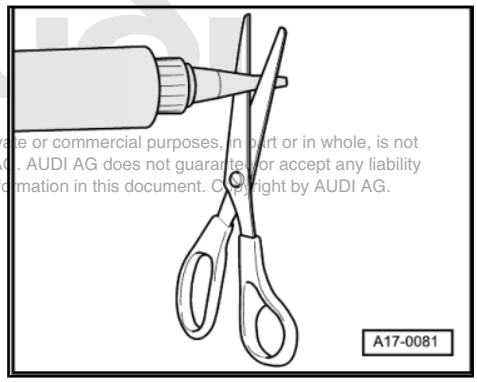

Protected by copyright. Copying for private or commercial purposes, in part or in whole, is not permitted unless authorised by AUDI AG. AUDI AG does not guarantee or accept any liability with respect to the correctness of information in this document. Copyright by AUDI AG.

– Apply bead of silicone sealant onto the clean sealing surface of sump (top section) as illustrated.

• Bead of sealant should be approx 1.5 mm wide -arrows-.

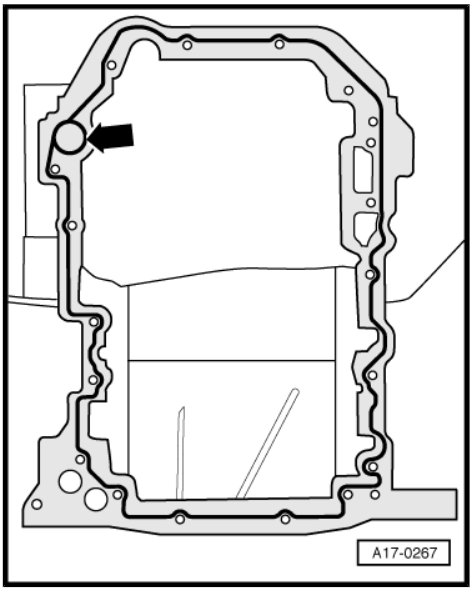

Note

♦ *The sealant bead must not be thicker than specified, otherwise excess sealant could enter the sump and clog the strainer in the oil pump.*

♦ *Apply sealant with particular care around hole -arrow- in cylinder block.*

♦ *The sump (top section) must be installed within 5 minutes after applying the silicone sealant.*

– Fit sump (top section) and tighten all bolts securing sump (top section) to cylinder block initially to 5 Nm in diagonal sequence.

– Tighten bolts securing sump (top section) to gearbox to 45 Nm.

Protected by copyright. Copying for private or commercial purposes, in part or in whole, is not permitted unless authorised by AUDI AG. AUDI AG does not guarantee or accept any liability with respect to the correctness of information in this document. Copyright by AUDI AG.

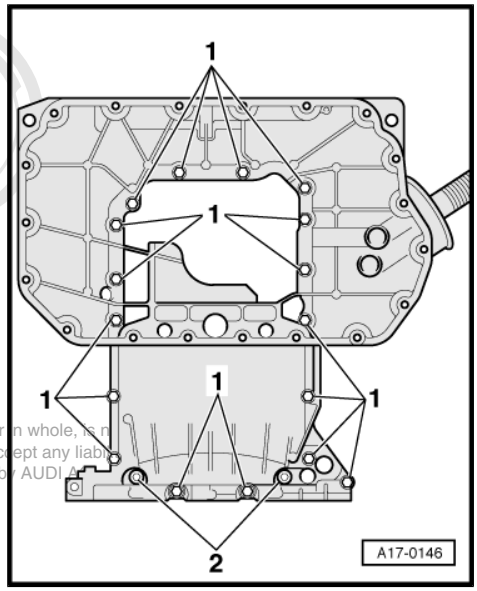

- Tighten bolts -1- to 16 Nm and bolts -2- to 22 Nm in a diagonal sequence.
- Install oil pump ⇒ page 138 .
- Install sump (bottom section) ⇒ page 135 .
- Renew O-ring on guide tube for oil dipstick and insert guide tube into hole in top section of sump.
- Install starter ⇒ Electrical system; Rep. Gr. 27
- Fill up with engine oil and check oil level ⇒ page 161 .
- Connect battery. Procedures required ⇒ Electrical system; Rep. Gr. 27 .
- Fill cooling system ⇒ page 165 .
- Deactivate jacking mode ⇒ Running gear, front-wheel drive and four-wheel drive; Rep. Gr. 43 ; Operating the air suspension .

Protected by copyright. Copying for private or commercial purposes, in part or in whole, is not permitted unless authorised by AUDI AG. AUDI AG does not guarantee or accept any liability with respect to the correctness of information in this document. Copyright by AUDI AG.

Tightening torques

Component		Nm
Sump (top section) to	M7	16
cylinder block and sealing flanges	M8	22
Top section of sump to gearbox		45
Bracket for refrigerant lines to suspension turret		10
Engine lifting eye to cylinder head		22
Resonator to cylinder head		10
Secondary air pipe	M6	10
to cylinder head	M8	22
Secondary air pipe to combination valve		10
Guide tube for oil dipstick to secondary air pipe		10
Air duct to throttle valve module -J338-		10
Retaining plate for	Intake manifold	10
solenoid valves to	Air duct	10
Engine mounting to engine support		23
Heat shield to gearbox		22
Oil cooler to sump (top section)		30
Torque reaction support to engine		40
Cross piece to stop for torque reaction support		65
Cross piece to body		42

1.6 Removing and installing drive chain and chain tensioner for oil pump

Removing

- Remove top section of sump ⇒ page 145 .
- Remove sealing flange (front) ⇒ page 42 .

– Remove bolts -4- and detach chain tensioner -3- from front sealing flange -1-.
– Take chain off drive sprocket.

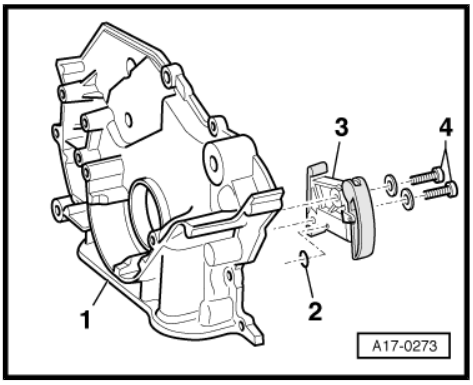

Installing

– Fit new O-ring -2-.
– Install chain tensioner -3- with bolts -4- (and washers) on front sealing flange -1-.

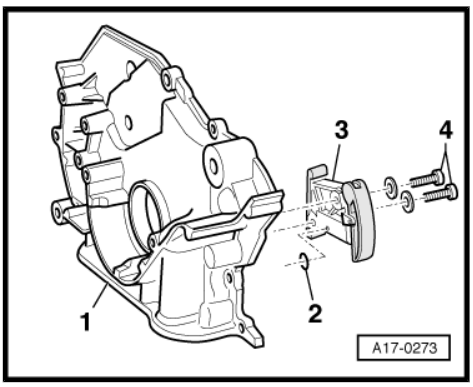

– Unscrew plug from access hole -3-.
– Press chain tensioner -1- in direction of arrow until a ∅ 3 mm drill bit -2- can be inserted into locating holes in sealing flange and chain tensioner.
– Install sealing flange (front) ⇒ page 42 .
– Install sump (top section) ⇒ page 145 .

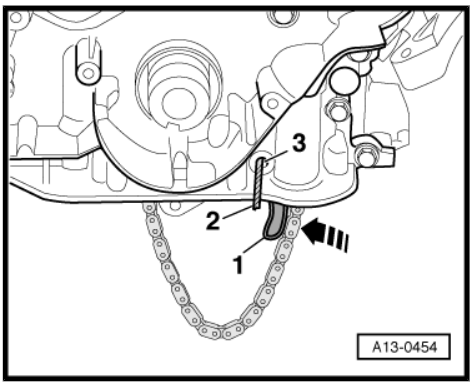

Tightening torque

Component	Nm
Chain tensioner to sealing flange (front)	12

Protected by copyright. Copying for private or commercial purposes, in part or in whole, is not permitted unless authorised by AUDI AG. AUDI AG does not guarantee or accept any liability with respect to the [illegible] AG.

1.7 Oil retention valve and spray nozzle valve - exploded view of components

Note

In the event of irregular valve noise which disappears after a lengthy drive but repeatedly re-occurs when travelling short distances, the oil retention valves must be renewed.

1 - O-rings
- ❑ Renew

2 - Oil retention valve -20 Nm-
- ❑ For oil supply to cylinder head (left-side)

3 - Banjo bolt -15 Nm-

4 - Baffle plate

5 - Gasket
- ❑ Renew

6 - Cover
- ❑ With connection for crankcase breather
- ❑ To remove, see Removing and installing intake manifold ⇒ page 94

7 - 10 Nm

8 - Hose
- ❑ To pressure control valve for crankcase breather

9 - Spray nozzle valve -25 Nm-
- ❑ For piston cooling

10 - Oil pipe
- ❑ Renew

11 - O-ring

12 - Oil retention valve -20 Nm-
- ❑ For oil supply to cylinder head (right-side)

13 - O-ring
- ❑ Renew

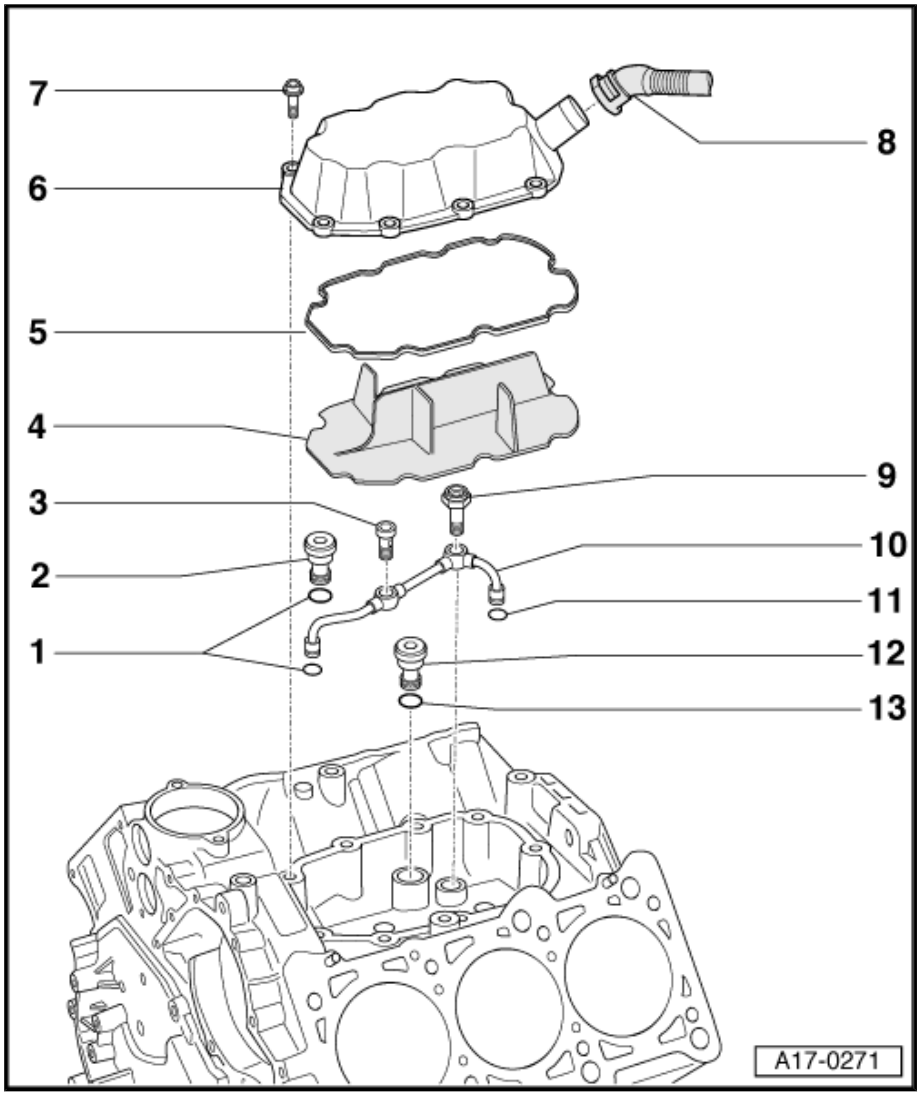

Protected by copyright. Copying for private or commercial purposes, in part or in whole, is not permitted unless authorised by AUDI AG. AUDI AG does not guarantee or accept any liability with respect to the correctness of information in this document. Copyright by AUDI AG.

1.8 Checking oil pressure and oil pressure switch

Special tools and workshop equipment required

- Oil pressure tester -V.A.G 1342-
- Voltage tester -V.A.G 1527 B-
- Adapter set -V.A.G 1594 A-

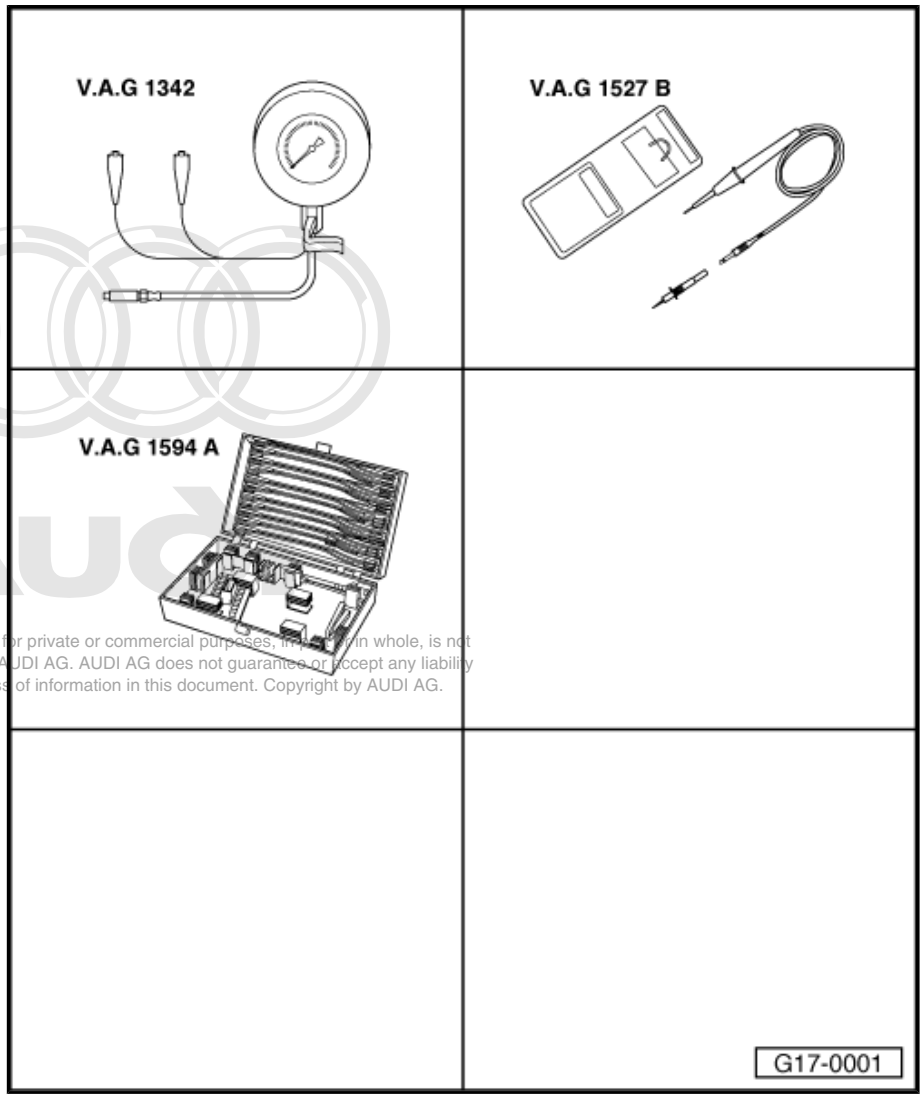

Protected by copyright. Copying for private or commercial purposes, in part or in whole, is not permitted unless authorised by AUDI AG. AUDI AG does not guarantee or accept any liability with respect to the correctness of information in this document. Copyright by AUDI AG.

Test conditions

- Oil level OK.
- Engine oil temperature approx. 80°C.

Preparation for test

– Activate jacking mode ⇒ Running gear, front-wheel drive and four-wheel drive; Rep. Gr. 43 ; Operating the air suspension .

– Vehicles with auxiliary heater: remove bolts -arrows- securing exhaust pipe for auxiliary/additional heater to noise insulation.

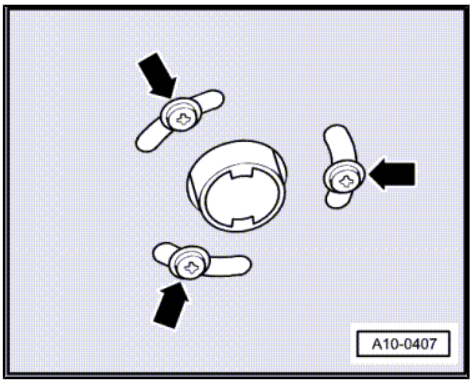

– Loosen quick release fasteners -1- and remove front noise insulation.

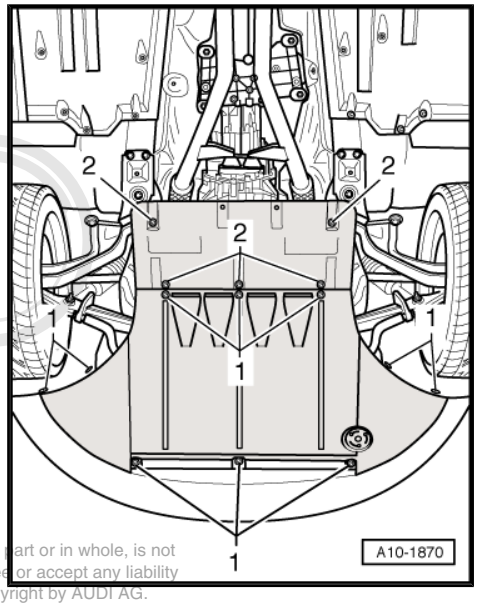

Protected by copyright. Copying for private or commercial purposes, in part or in whole, is not permitted unless authorised by AUDI AG. AUDI AG does not guarantee or accept any liability with respect to the correctness of information in this document. Copyright by AUDI AG.

– Unplug electrical connector -arrow- at oil pressure switch.

– Unscrew oil pressure switch.

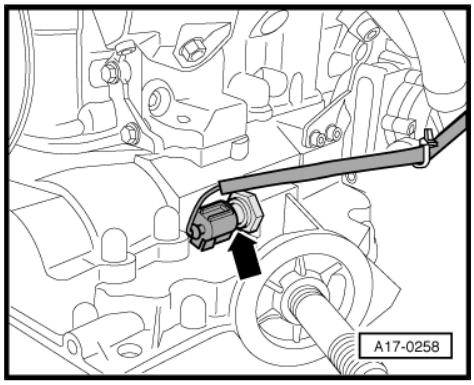

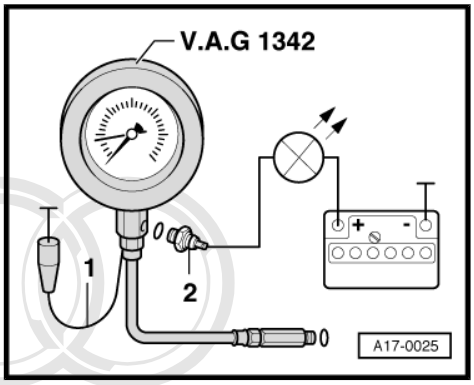

– Connect oil pressure tester -V.A.G 1342- to threaded hole for oil pressure switch.
– Screw oil pressure switch -2- into oil pressure tester -V.A.G 1342- .

Checking oil pressure switch

– Connect brown wire -1- of oil pressure tester to earth (-).
– Connect voltage tester -V.A.G 1527 B- with test leads from adapter set -V.A.G 1594 A- to oil pressure switch and battery positive (+).

• LED should not light up.

If the LED is lit:

– Renew oil pressure switch.
– Start the engine.

Note

Observe tester and LED while starting, as switching point of oil pressure switch may already be exceeded when starting.

Protected by copyright. Copying for private or commercial purposes, in part or in whole, is not permitted unless authorised by AUDI AG. AUDI AG does not guarantee or accept any liability with respect to the correctness of information in this document. Copyright by AUDI AG.

• Test lamp should light up at 1.2 ... 1.6 bar.

If the LED does not light up:

– Renew oil pressure switch.

Checking oil pressure

– Start the engine.

• Minimum oil pressure at idling speed: 1.5 bar
• Minimum oil pressure at 2000 rpm: 3.0 bar

Assembling

Assembly is carried out in the reverse order; note the following:

– Deactivate jacking mode ⇒ Running gear, front-wheel drive and four-wheel drive; Rep. Gr. 43 ; Operating the air suspension .

Tightening torque

Component	Nm
Oil pressure switch to sump (top section)	25

1.9 Engine oil

Viscosity grades and oil specifications ⇒ Maintenance ; Booklet 4E .

1.10 Checking oil level

Check oil level ⇒ Maintenance ; Booklet 4E .

19 – Cooling

1 Cooling system - on engine

WARNING

Hot steam or hot coolant can escape when expansion tank is opened; cover filler cap with cloth and open carefully.

Note

- *When the engine is warm the cooling system is under pressure. If necessary release pressure before commencing repair work.*
- *Secure all hose connections with the correct type of hose clips (same as original equipment) ⇒ Parts catalogue.*
- *Renew seals and gaskets.*
- *The arrow markings on coolant pipes and on ends of hoses must align.*

Protected by copyright. Copying for private or commercial purposes, in part or in whole, is not permitted unless authorised by AUDI AG. AUDI AG does not guarantee or accept any liability with respect to the correctness of information in this document. Copyright by AUDI AG.

1.1 Draining and filling cooling system

Special tools and workshop equipment required

- Adapter -V.A.G 1274/8-
- Pipe -V.A.G 1274/10-
- Drip tray -V.A.G 1306-
- Hose clip pliers - V.A.G 1921-
- Cooling system filler unit - VAS 6096-
- Refractometer -T10007-

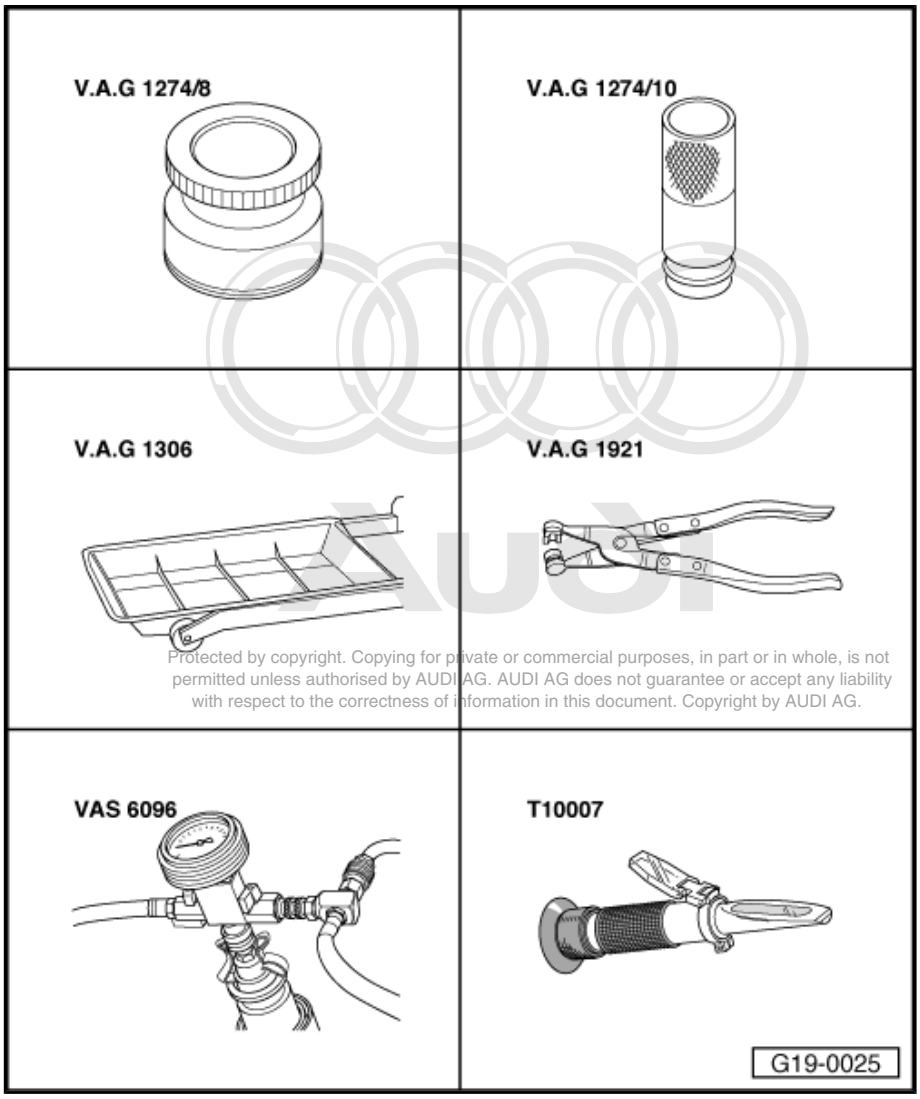

Protected by copyright. Copying for private or commercial purposes, in part or in whole, is not permitted unless authorised by AUDI AG. AUDI AG does not guarantee or accept any liability with respect to the correctness of information in this document. Copyright by AUDI AG.

Draining

Note

Collect drained coolant in a clean container for re-use or disposal.

– Activate jacking mode ⇒ Running gear, front-wheel drive and four-wheel drive; Rep. Gr. 43 ; Operating the air suspension .

WARNING

Hot steam or hot coolant can escape when expansion tank is opened; cover filler cap with cloth and open carefully.

– Open filler cap on coolant expansion tank.

– Vehicles with auxiliary heater: remove bolts -arrows- securing exhaust pipe for auxiliary/additional heater to noise insulation.

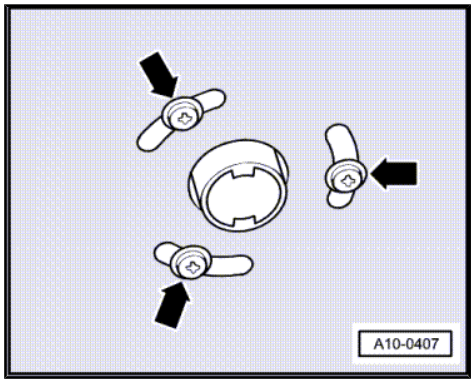

– Loosen quick release fasteners -1- and remove front noise insulation.

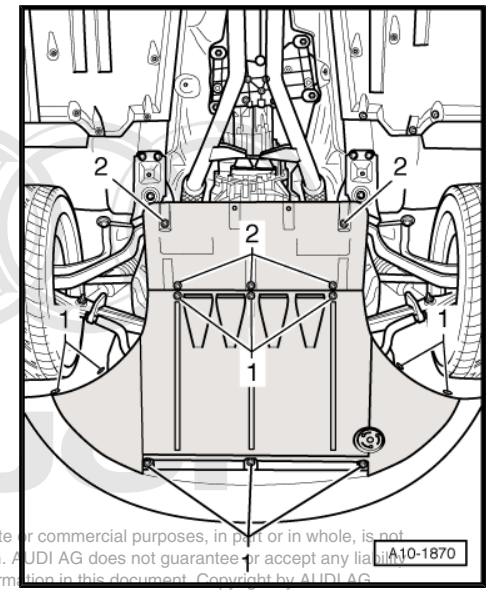

Protected by copyright. Copying for private or commercial purposes, in part or in whole, is not permitted unless authorised by AUDI AG. AUDI AG does not guarantee or accept any liability with respect to the correctness of information in this document. Copyright by AUDI AG.

– Place drip tray -V.A.G 1306- under engine.

– Detach coolant hose from bottom left of radiator -arrow- and drain off coolant.

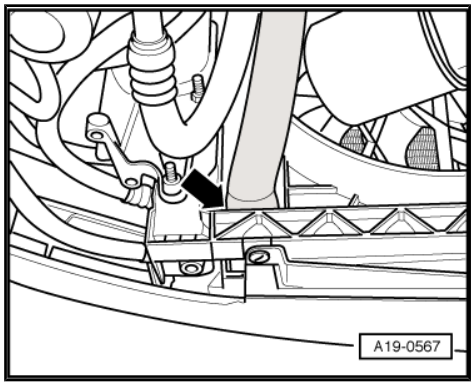

– Disconnect coolant hoses -arrows- from ATF cooler and drain off coolant.

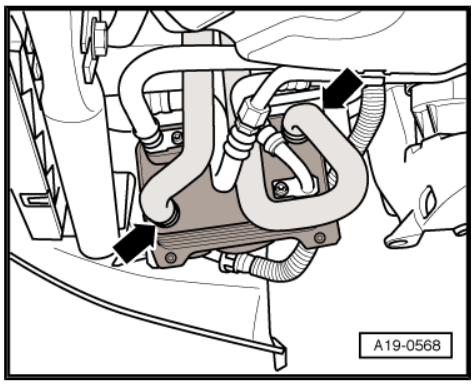

– Also detach coolant hose from oil cooler -arrow-, and drain off remaining coolant.

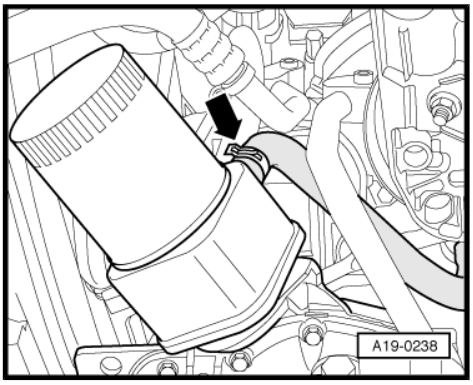

Filling

Note

- *The cooling system is filled all year round with a mixture of water and antifreeze/corrosion protection agent.*
- *It is important to use only coolant additive Plus -G 012 A8F A1- (also designated as "G12+") "meeting specification TL VW 774 F". Other coolant additives could seriously impair in particular the anticorrosion properties. The resulting damage could lead to loss of coolant and consequently to serious engine damage.*
- *Coolant additive "G12+" may be mixed with additives "G11" and "G12".*
- *"G12+" and coolant additives marked "Conforming with specification TL VW 774 F" prevent frost and corrosion damage and stop scale from forming. Such additives also raise the boiling point of the coolant. For these reasons the cooling system must be filled all year round with the correct antifreeze and anticorrosion additive.*
- *Because of its high boiling point, the coolant improves engine reliability under heavy loads, particularly in countries with tropical climates.*
- *Frost protection is required down to about -25°C (in countries with arctic climate: down to about -35°C).*
- *The coolant concentration must not be reduced by adding water even in warmer seasons and in warmer countries. The antifreeze percentage must be at least 40 %.*
- *If greater frost protection is required in very cold climates, the amount of "G12+" can be increased, but only up to 60% (this gives frost protection to about -40°C). If antifreeze concentration exceeds 60%, frost protection decreases again and cooling efficiency is also impaired.*
- *Only use clean drinking water for mixing coolant.*
- *If radiator, heat exchanger, cylinder head, cylinder head gasket or cylinder block have been renewed, do not re-use old coolant.*
- *Contaminated or dirty coolant must not be used again.*
- *To check frost protection level of coolant additive "G12+" you must use a refractometer -T10007- .*
- *Renew seal.*

This document is copyright. Copying for private or commercial purposes, in part or in whole, is not permitted unless authorised by AUDI AG. AUDI AG does not guarantee or accept any liability with respect to the accuracy, completeness or timeliness of the information contained by AUDI AG.

– Connect coolant hose (bottom left) to radiator -arrow-.

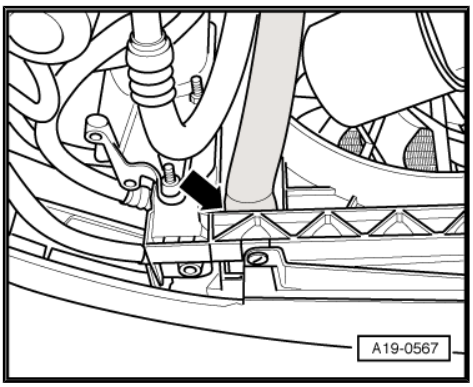

Connect coolant hoses to ATF cooler -arrows-.

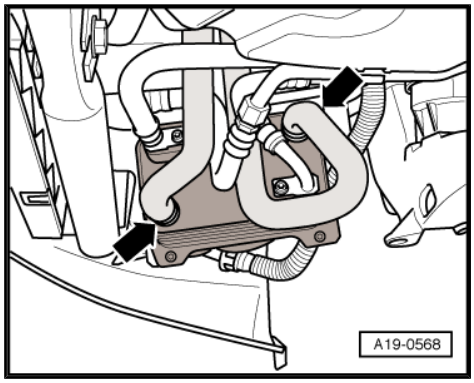

– Connect coolant hose to oil cooler -arrow-.

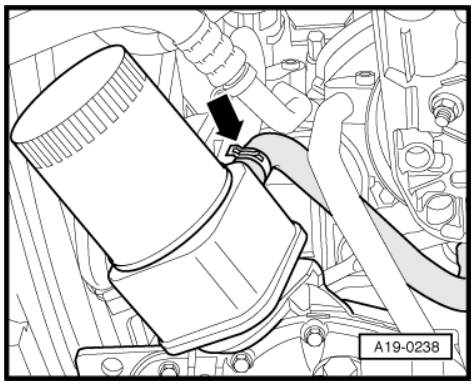

– Fill reservoir -VAS 6096/1- with at least 15 litres of premixed coolant (based on recommended ratio):

- “G12+” (40 %) and water (60 %) for frost protection to -25°C
- “G12+” (50 %) and water (50 %) for frost protection to -35°C
- “G12+” (60 %) and water (40 %) for frost protection to -40°C

– Screw adapter for cooling system tester -V.A.G 1274/8- onto coolant expansion tank.

– Fit cooling system charge unit -VAS 6096- onto adapter -V.A.G 1274/8- .

– Feed vent hose -1- into a small container -2-. (The vented air draws along a small amount of coolant, which should be collected.)

– Close the two valves -A- and -B- by setting lever at right angle to direction of flow.

– Connect hose -3- to compressed air.

- Pressure: 6 ... 10 bar.

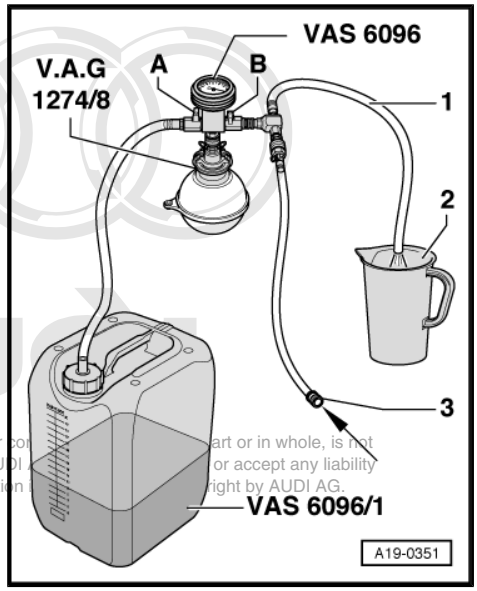

Protected by copyright. Copying for private or commercial purposes, in part or in whole, is not permitted unless authorised by AUDI AG. AUDI AG does not guarantee or accept any liability with respect to the correctness of information in this document. Copyright by AUDI AG.

– Open valve -B- (turn lever in direction of flow).

The suction jet pump generates a vacuum in the cooling system.

• The needle on the gauge must move into the green zone.

– Also briefly open valve -A- (turn lever in direction of flow) so that hose on coolant expansion tank -VAS 6096/1- can fill with coolant.

– Close valve -A- again.

– Leave valve -B- open for another 2 minutes.

• The suction jet pump will continue generating a vacuum in the cooling system.

• The needle on the gauge must remain in the green zone.

– Close valve -B-.

• The needle on the gauge should stop in the green zone. The vacuum level in the cooling system is then sufficient for subsequent filling.

If the needle does not reach the green area, repeat the process.

If the vacuum level drops, there is a leak in the cooling system.

– Detach the compressed air hose.

– Open valve -A-.

The vacuum in the cooling system causes the coolant to be drawn out of the cooling system charge unit -VAS 6096/1- ; the cooling system is then filled.

– Detach cooling system charge unit -VAS 6096- from expansion tank.

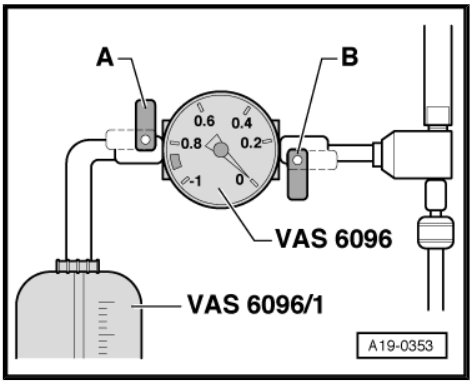

– Fit pipe -V.A.G 1274/10- onto adapter -V.A.G 1274/8- .

Protected by copyright. Copying for private or commercial purposes, in part or in whole, is not permitted unless authorised by AUDI AG. AUDI AG does not guarantee or accept any liability with respect to the correctness of information in this document. Copyright by AUDI AG.

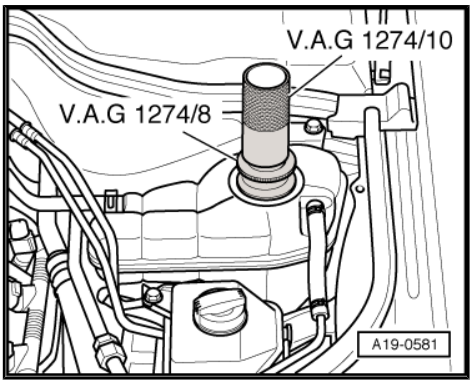

– Pull off front engine cover -arrows-.

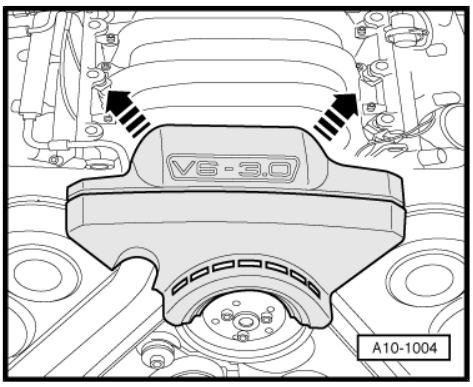

– Unscrew bleeder screw -arrow-.
– Fill up with coolant until it flows out at bleeder hole in coolant pipe.
– Tighten bleeder screw to 15 Nm.

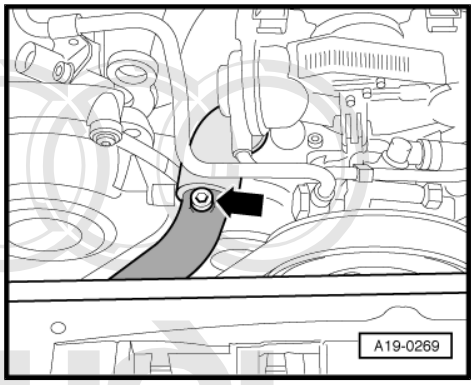

Note

Renew seal.

– Pull off rubber seal -1- on plenum chamber covers.
– Detach plenum chamber covers -2- and -3-.

Protected by copyright. Copying for private or commercial purposes, in part or in whole, is not permitted unless authorised by AUDI AG. AUDI AG does not guarantee or accept any liability with respect to the correctness of information in this document. Copyright by AUDI AG.

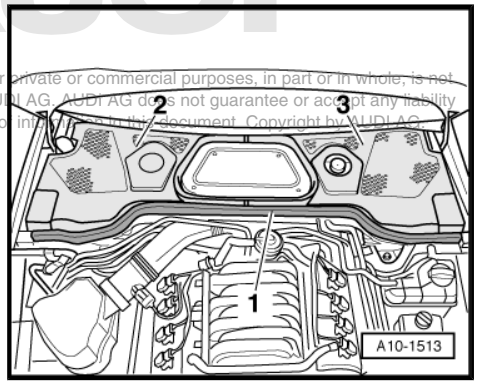

– Open bleeder screws -arrows-.
– Fill up with coolant until it flows out at bleeder holes in coolant hoses.
– Close the bleeder screws.
– Tighten filler cap on expansion tank.
– Start engine and maintain an engine speed of about 2,000 rpm for approx. 3 minutes.
– Then allow engine to run at idling speed until the lower hose on radiator becomes hot.

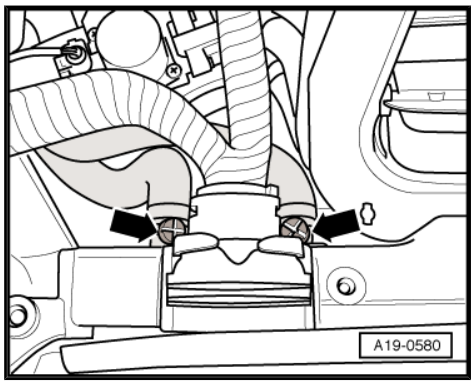

WARNING

Hot steam or hot coolant can escape when expansion tank is opened; cover filler cap with cloth and open carefully.

– Check coolant level and top up if necessary. When the engine is at normal operating temperature, the coolant level must be on the MAX mark, when the engine is cold, between the MIN and MAX marks.
– Switch off engine.
– Deactivate jacking mode ⇒ Running gear, front-wheel drive and four-wheel drive; Rep. Gr. 43 ; Operating the air suspension .

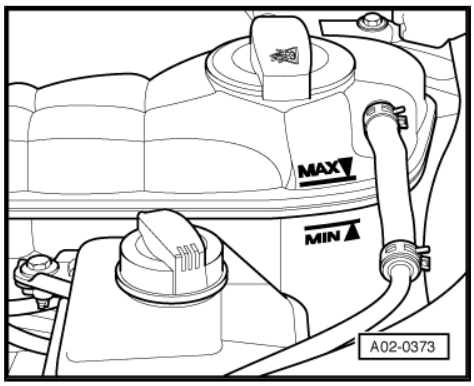

1.2 Coolant pump and thermostat - exploded view

1 - 10 Nm

2 - 10 Nm

3 - Coolant pump

- ❑ Removing and installing ⇒ page 169

4 - Gasket

- ❑ Renew

5 - O-ring

- ❑ Renew

6 - Coolant thermostat with hose flange

- ❑ Can only be renewed as complete unit
- ❑ Removing and installing ⇒ page 171
- ❑ Checking ⇒ page 173

7 - 10 Nm

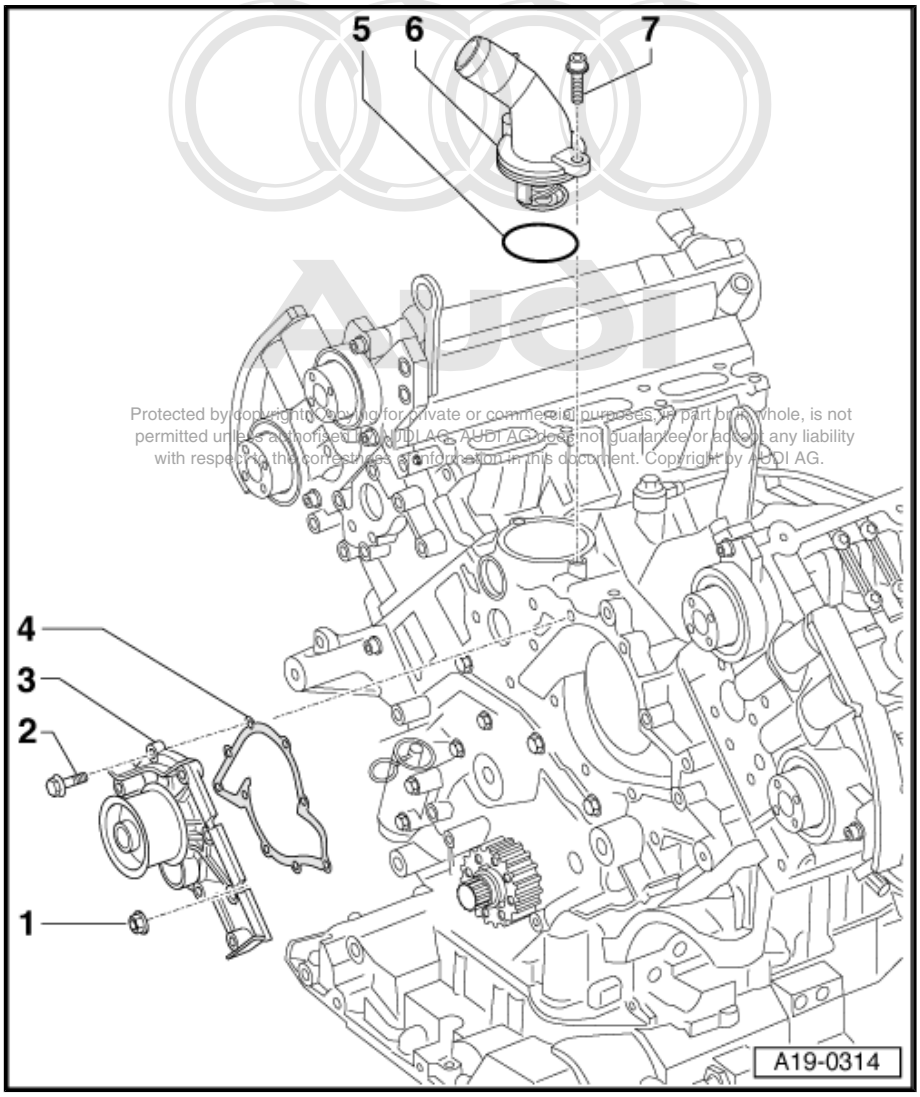

Protected by copyright. Copying for private or commercial purposes, in part or in whole, is not permitted unless authorised by AUDI AG. AUDI AG does not guarantee or accept any liability with respect to the correctness of information in this document. Copyright by AUDI AG.

1.3 Removing and installing coolant pump

Removing

– Drain off coolant ⇒ page 163 .

– Remove power steering pump ⇒ Running gear, front-wheel drive and four-wheel drive; Rep. Gr. 48 .

– Remove toothed belt ⇒ page 62 .

– Remove camshaft sprockets on cylinder head (right-side).

– Remove bolts -1- and take off bracket with idler roller.
– Remove bolts -2- and take off toothed belt guard (rear right).
– Remove eccentric adjuster for toothed belt.

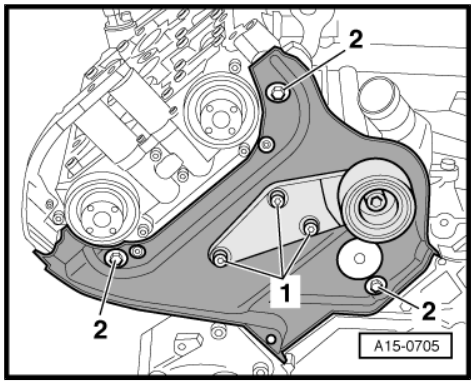

– Unscrew nuts -2- securing toothed belt guard (rear left).
– Unscrew bolts -1- securing coolant pump and detach coolant pump.

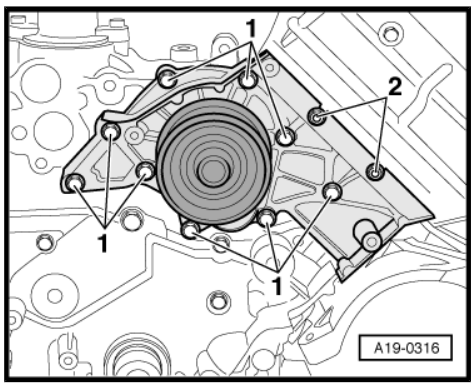

Installing

Installation is carried out in the reverse order; note the following:

Note

Renew seals and gaskets.

– Install toothed belt (adjust valve timing) ⇒ page 69 .
– Install power steering pump ⇒ Running gear, front-wheel drive and four-wheel drive; Rep. Gr. 48 .
– Fill cooling system ⇒ page 165 .

Tightening torques

Component	Nm
Coolant pump to cylinder block	10
Toothed belt guard (rear) to coolant pump	10
Toothed belt guard (rear right) to engine	10 [20)]
Bracket for idler roller to cylinder head	10 [20)]

20) Renew bolt.

Protected by copyright. Copying for private or commercial purposes, in part or in whole, is not permitted unless authorised by AUDI AG. AUDI AG does not guarantee or accept any liability with respect to the correctness of information in this document. Copyright by AUDI AG.

1.4 Removing and installing thermostat

Special tools and workshop equipment required

- 2-hole pin wrench -3212-
- Poly V-belt lever -3299- with bracket - 3299/1-
- Hose clip pliers - V.A.G 1921-

Protected by copyright. Copying for private or commercial purposes, in part or in whole, is not permitted unless authorised by AUDI AG. AUDI AG does not guarantee or accept any liability with respect to the correctness of information in this document. Copyright by AUDI AG.

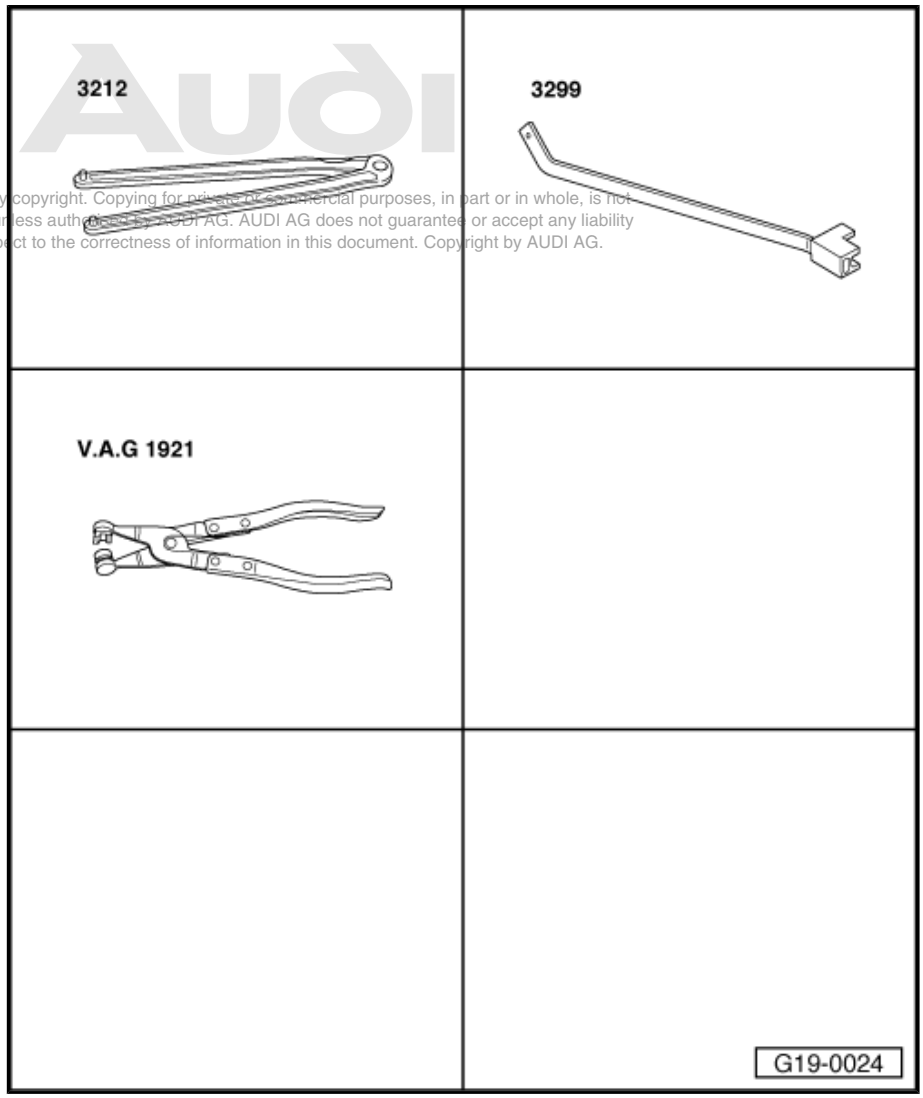

Removing

– Drain off coolant ⇒ page 163 .

– Pull off rear engine cover -arrows- ...

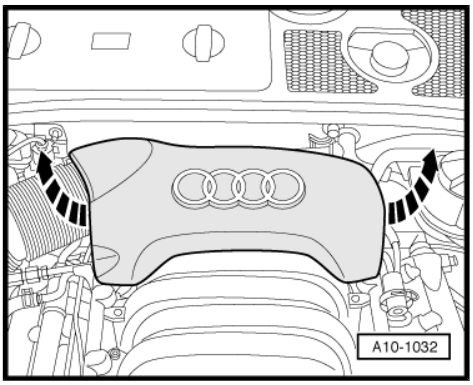

– ... as well as front engine cover -arrows-.

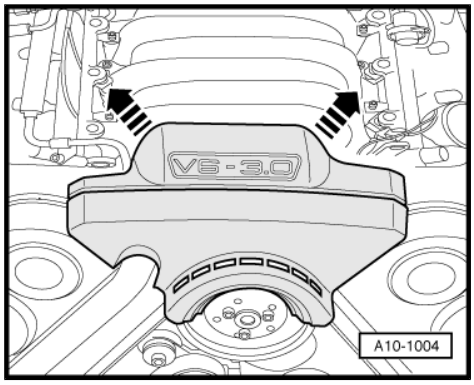

Note

Before removing, mark direction of rotation of poly V-belt with chalk or felt-tipped pen. If the belt runs in the opposite direction when it is refitted, this can cause breakage.

– To slacken the poly V-belt, turn the tensioner in the direction indicated by the arrow, using the poly V-belt lever -3299- and -3299/1- .

– Remove poly V-belt from pulley for vane pump.

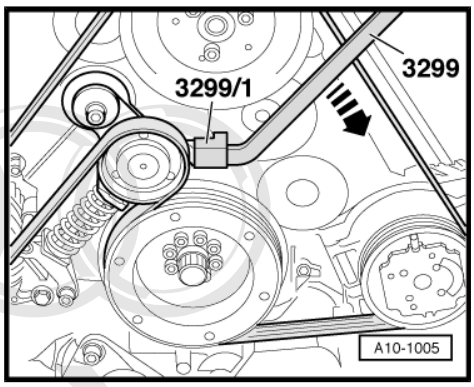

– Unbolt poly V-belt pulley at vane pump -arrows-, using 2-hole pin wrench -3212- as a counterhold.

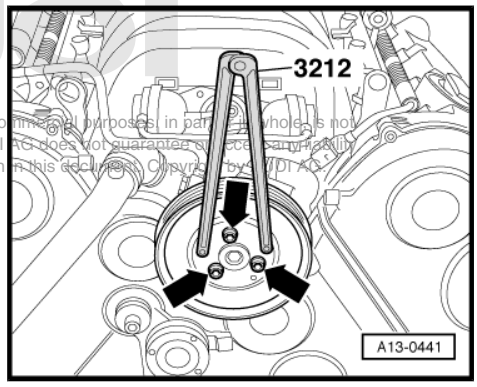

Protected by copyright. Copying for private or commercial purposes, in part or in whole, is not permitted unless authorised by AUDI AG. AUDI AG does not guarantee or accept any liability with respect to the correctness of information in this document. Copyright by AUDI AG.

Note

Lay a cloth under the hydraulic pressure pipe to catch any escaping hydraulic fluid.

– Remove pressure pipe for power-assisted steering at vane pump, cylinder head and rear coolant pipe -arrows on right side of illustration-.

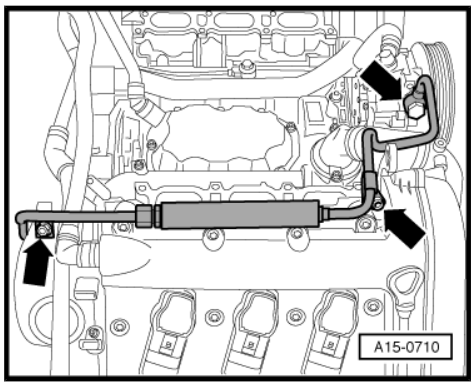

Note

Ignore -arrow on left side of illustration-.

– Unscrew bolts -1- and -2- for coolant pipe.
– Release clip -3- and detach coolant pipe from coolant hose connection.

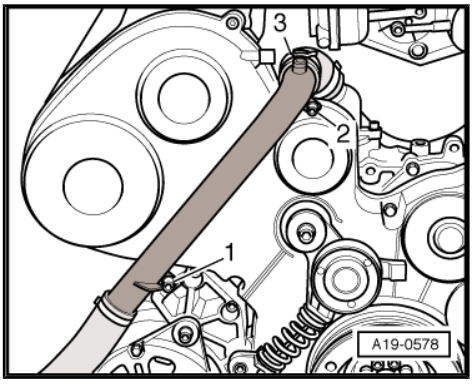

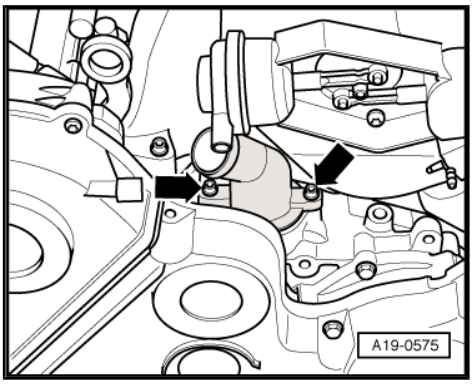

Note

Place a cloth underneath to catch any escaping coolant.

– Unscrew bolts -arrows-.
– Detach thermostat with hose flange.

Installing

Installation is carried out in the reverse order; note the following:

Note

- *Renew seals and O-ring.*
- *Secure all hose connections with the correct type of hose clips (same as original equipment) ⇒ Parts catalogue.*

– Before installing, clean and smoothen sealing surface for O-ring.
– Install poly V-belt ⇒ page 33 .
– Fill cooling system ⇒ page 165 .
– Top up power steering fluid and bleed steering system: ⇒ Running gear, front-wheel drive and four-wheel drive; Rep. Gr. 48

Tightening torques

Component	Nm
Hose flange for thermostat to cylinder block	10
Coolant pipe to engine	10
Banjo bolt to vane pump	47
Hydraulic pipe to cylinder head	22
Pulley to vane pump	23

Protected by copyright. Copying for private or commercial purposes, in part or in whole, is not permitted unless authorised by AUDI AG. AUDI AG does not guarantee or accept any liability with respect to the correctness of information in this document. Copyright by AUDI AG.

1.5 Checking thermostat

– Heat thermostat in water bath.

Starts to open	Fully open	Opening travel
approx. 87°C	approx. 102°C [21)]	at least 8 mm

21) Cannot be tested.

1.6 Coolant pipes - exploded view of components

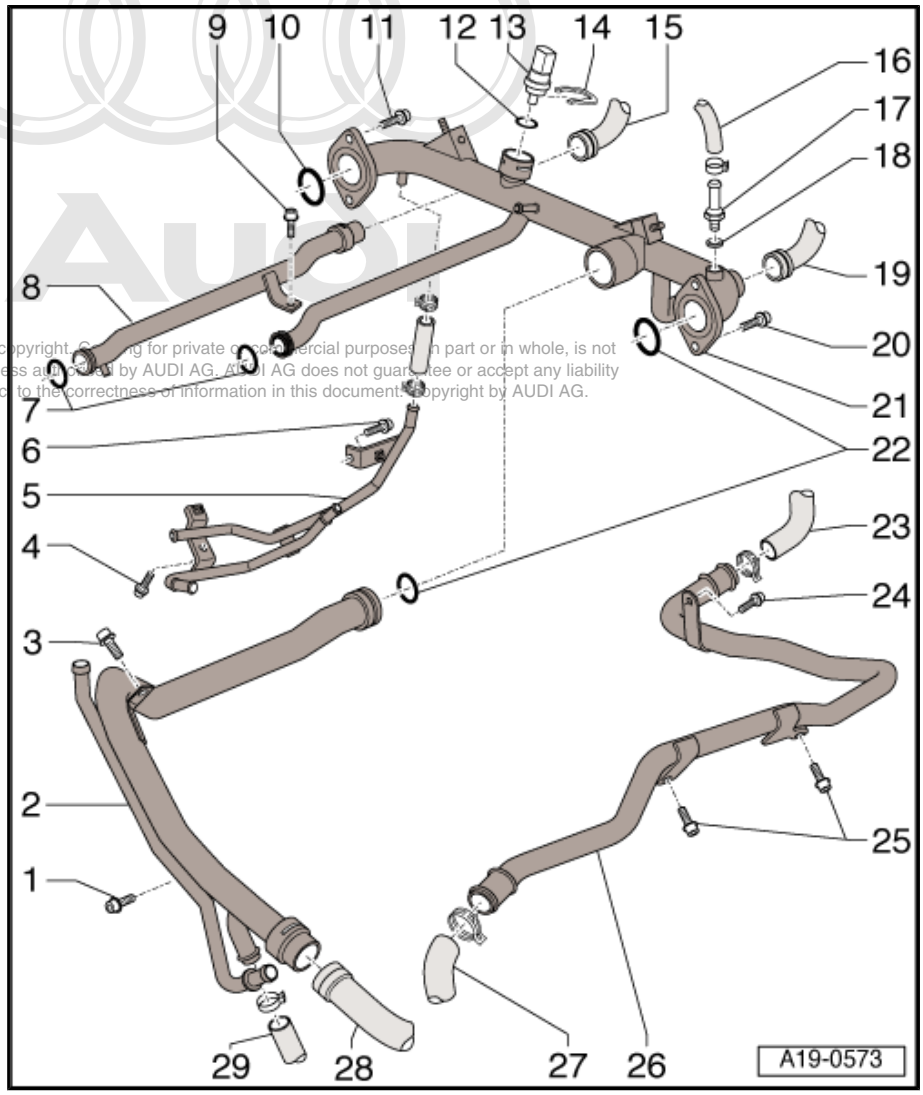

Protected by copyright. Copying for private or commercial purposes, in part or in whole, is not permitted unless authorised by AUDI AG. AUDI AG does not guarantee or accept any liability with respect to the correctness of information in this document. Copyright by AUDI AG.

1 - 10 Nm

2 - Coolant pipe (front)

- ❑ Removing and installing ⇒ page 175

3 - 22 Nm

4 - 10 Nm

5 - Coolant pipe leading to alternator

- ❑ Removing and installing ⇒ page 182

6 - 10 Nm

7 - O-rings

- ❑ Renew

8 - Coolant pipe (right-side)

- ❑ Removing and installing ⇒ page 179

9 - 10 Nm

10 - O-ring

- ❑ Renew

11 - 10 Nm

12 - O-ring

- ❑ Renew

13 - Coolant temperature sender -G2- / Coolant temperature sender -G62-

14 - Retaining clip

15 - Coolant hose

- ❑ To heating system heat exchanger

16 - Coolant hose

- ❑ To expansion tank

17 - Connection

- ❑ Tighten to 15 Nm

18 - Seal

- ❑ Renew

19 - Coolant hose

- ❑ To heating system heat exchanger

20 - 10 Nm

21 - Coolant pipe (rear)

- ❑ Removing and installing ⇒ page 180

22 - O-rings

- ❑ Renew

23 - Coolant hose

- ❑ To heating system heat exchanger

24 - 10 Nm

25 - 22 Nm

26 - Coolant pipe (left-side)

- ❑ Removing and installing ⇒ page 176

27 - Coolant hose

- ❑ To expansion tank

28 - Coolant hose

- ❑ To bottom of radiator

29 - Coolant hose

- ❑ To oil cooler

1.7 Removing and installing coolant pipe (front)

Special tools and workshop equipment required

- ♦ Hose clamps for hoses up to 25 mm Ø -3094-

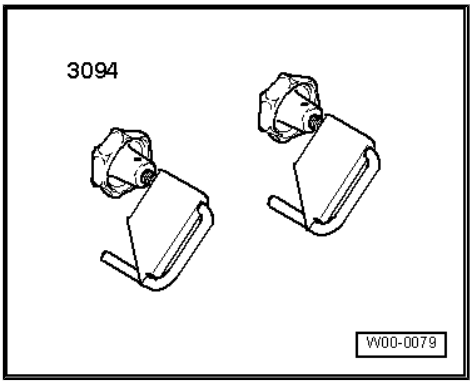

Protected by copyright. Copying for private or commercial purposes, in part or in whole, is not permitted unless authorised by AUDI AG. AUDI AG does not guarantee or accept any liability with respect to the correctness of information in this document. Copyright by AUDI AG.

- ♦ Drip tray

Removing

Note

All cable ties which are released or cut open when removing must be fitted in the same position when installing.

– Remove intake manifold ⇒ page 94 .

– Remove toothed belt ⇒ page 62 .

– Remove camshaft sprockets on cylinder head (left-side).

– Remove bolts -1- and -2- and take off toothed belt guard (rear left).

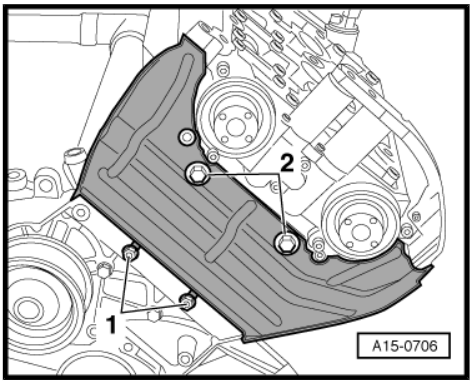

– Place drip tray underneath.
– Use hose clips -3094- to clamp off both hoses at hydraulic fluid supply pipe.
– Disconnect both hydraulic hoses from supply pipe.
– Disconnect coolant hoses from coolant pipe (front).

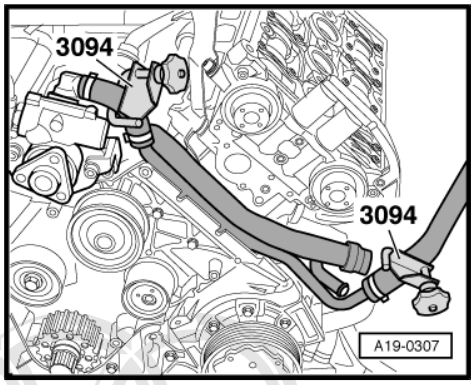

– Unscrew bolts -1- and -2- and move connecting pipes clear of coolant pipe.
– Pull coolant pipe off from front -arrow-.

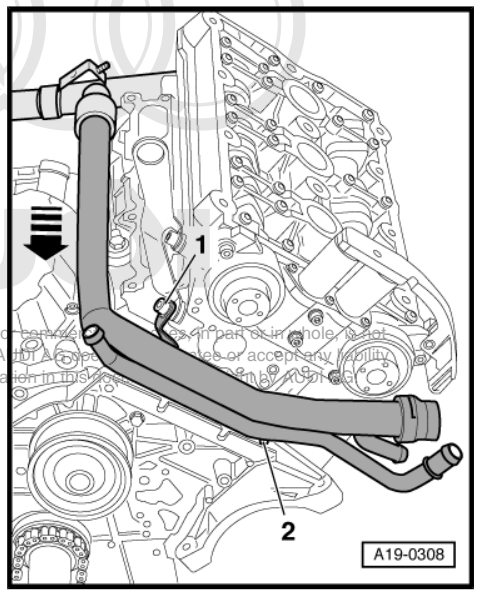

Installing

Installation is carried out in the reverse order; note the following:

Note

- *Secure all hose connections with the correct type of hose clips (same as original equipment) ⇒ Parts catalogue.*
- *Renew O-rings.*

Audi AG reserves all rights. Any copying, publishing, private or commercial use, in part or in whole, is not permitted without the prior consent authorised by AUDI AG. Audi AG does not guarantee or assume any liability with respect to the correctness of information in this document, or any damage incurred by its use.

– Before installing, clean and smoothen sealing surface for O-ring.
– Lubricate new O-ring with “G12” and slide onto coolant pipe.
– Push front coolant pipe into opening in rear coolant pipe.
– Install intake manifold ⇒ page 94 .
– Install toothed belt (adjust valve timing) ⇒ page 69 .
– Fill cooling system ⇒ page 165 .
– Top up power steering fluid and bleed steering system: ⇒ Running gear, front-wheel drive and four-wheel drive; Rep. Gr. 48

Tightening torques

Component		Nm
Coolant pipe (front)	M 6	10
to cylinder head	M 8	22
Toothed belt guard (rear) to cylinder head/ cylinder block		10 [22)]

22) Renew bolts.

1.8 Removing and installing coolant pipe (left-side)

Removing

– Drain off coolant ⇒ page 163 .

– Pull off rear engine cover -arrows-.

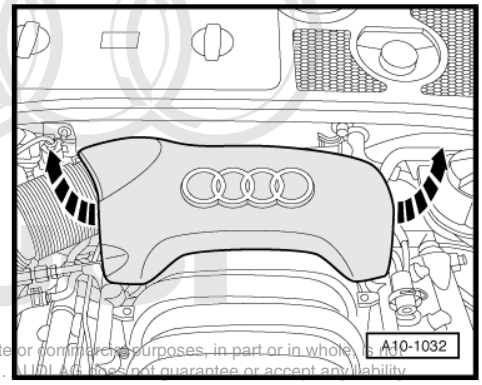

Protected by copyright. Copying for private or commercial purposes, in part or in whole, is not permitted unless authorised by AUDI AG. AUDI AG does not guarantee or accept any liability with respect to the correctness of information in this document. Copyright by AUDI AG.

– Detach air intake hose -1- at air mass meter -G70- .
– Unscrew bolts for solenoid valve retaining plate -3- (-arrows-).
– Pull hose -4- off air duct -2-.

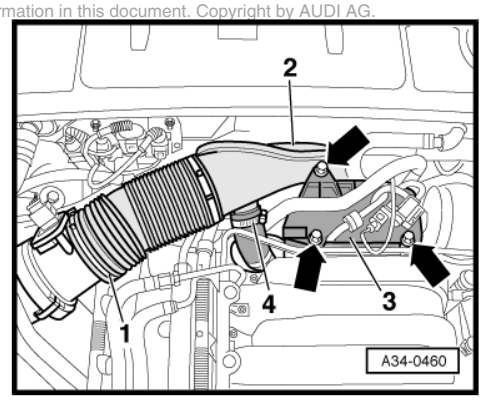

– Unscrew bolt -arrow- and pull air duct -2- off throttle valve module -J338- .
– If fitted, pull hose -1- off at air duct.

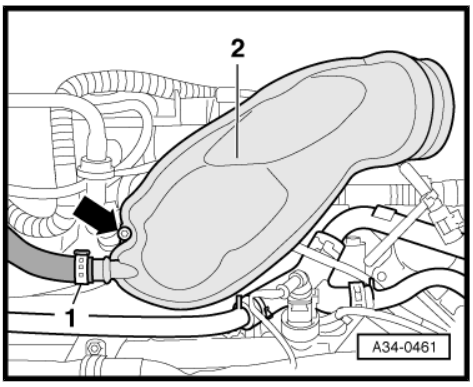

Note

For illustration purposes, the air duct is shown from rear and with engine removed.

– Detach vacuum hose -arrow- going to brake servo at non-return valve.

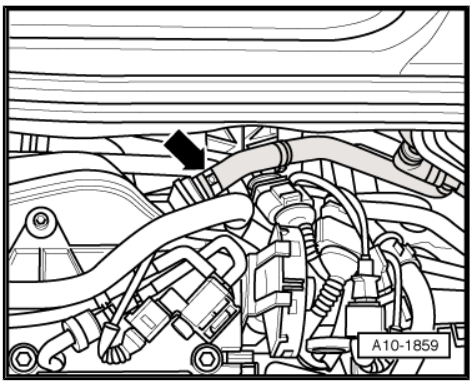

– Unscrew bracket for connectors (rear centre) from bulkhead.
– Remove electrical connectors -1 ... 5- from bracket.

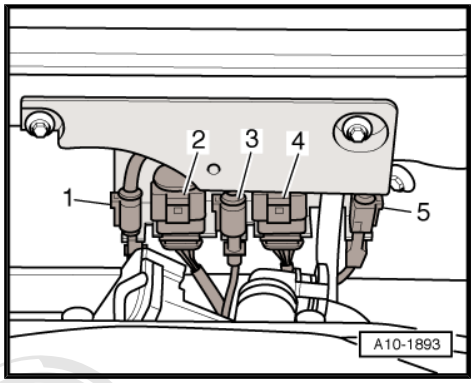

– Detach coolant hose (rear left) -arrow- at engine.

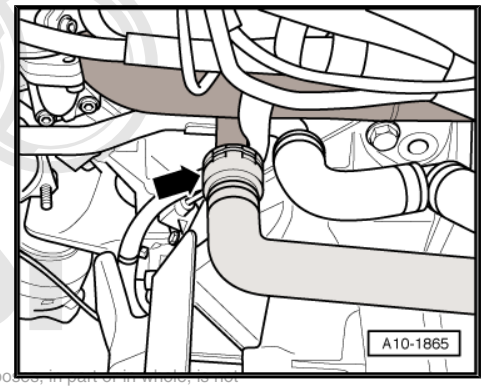

Note

Shown from rear with engine removed for illustration purposes.

Protected by copyright. Copying for private or commercial purposes, in part or in whole, is not permitted unless authorised by AUDI AG. AUDI AG does not guarantee or accept any liability with respect to the accuracy of information in this document. Copyright by AUDI AG.

– Detach coolant hose -arrow- at expansion tank.

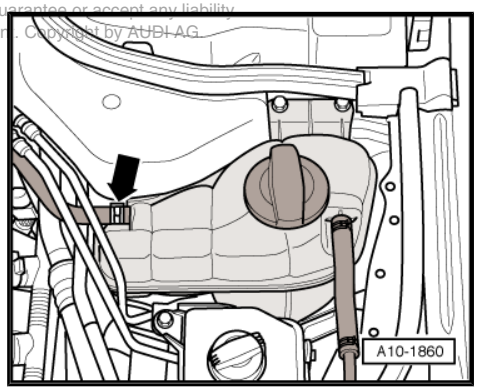

– Unscrew bolts -4- and -5- at cylinder head (left-side).
– Unplug electrical connectors -1 ... 3- and -6- and move wiring harness clear to one side.

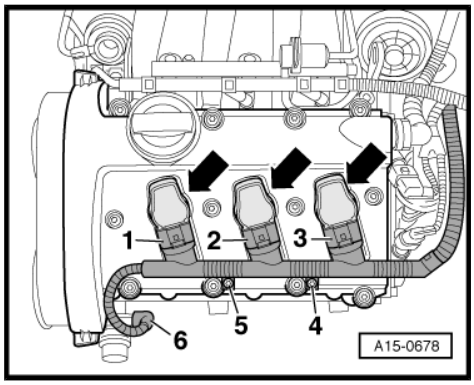

Note

Ignore -arrows-.

– Detach coolant hose (front left) -arrow- at engine.

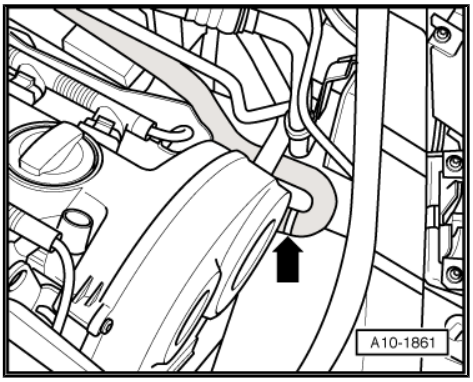

– Unscrew bolts -1- for coolant pipe (left-side).

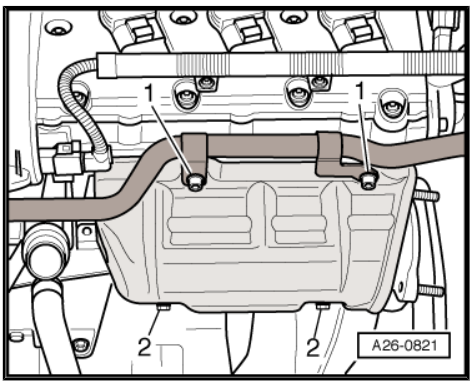

Note

Ignore item marked -2-.

– Disconnect coolant hose -arrow- from coolant pipe (left-side).
– Unscrew bolt -1- and remove coolant pipe (left-side).

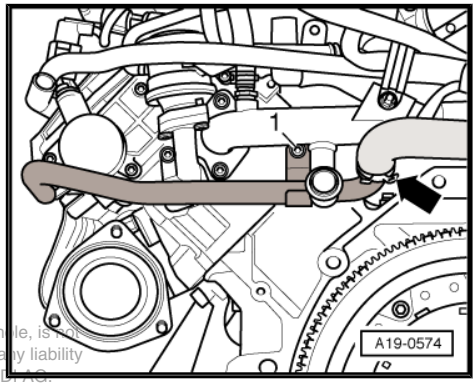

Note

Shown from rear with engine removed for illustration purposes.

Installing

Installation is carried out in the reverse order; note the following:

Protected by copyright. Copying for private or commercial purposes, in part or in whole, is not permitted unless authorised by AUDI AG. AUDI AG does not guarantee or accept any liability with respect to the correctness of information in this document. Copyright by AUDI AG.

Note

- *Secure all hose connections with the correct type of hose clips (same as original equipment) ⇒ Parts catalogue.*
- *Renew O-rings.*

– Fill cooling system ⇒ page 165 .

Tightening torques

Component		Nm
Air pipe to throttle valve module -J338-		10
Retaining plate for	Intake manifold	10
solenoid valves to	Air duct	10

1.9 Removing and installing coolant pipe (right-side)

Removing

– Remove intake manifold ⇒ page 94 .

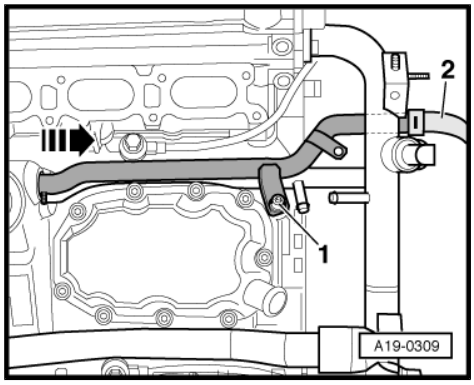

– Disconnect rear coolant hose -2- from coolant pipe (right-side).
– Remove bolt -1-.
– Pull coolant pipe (right-side) out of cylinder block towards the rear -arrow-.
– Take out coolant pipe from the top.

Installing

Installation is carried out in the reverse order; note the following:

Note

Renew O-rings.

– Before installing, clean and smoothen sealing surface for O-ring.
– Lubricate new O-ring with “G12” and slide onto coolant pipe.
– Slide coolant pipe into bore in cylinder block.
– Install intake manifold ⇒ page 94 .
– Fill cooling system ⇒ page 165 .

Tightening torque

Component	Nm
Coolant pipe (right-side) to cylinder block	10

1.10 Removing and installing coolant pipe (rear)

Removing

Protected by copyright. Copying for private or commercial purposes, in part or in whole, is not permitted unless authorised by AUDI AG. AUDI AG does not guarantee or accept any liability with respect to the correctness of information in this document. Copyright by AUDI AG.

Note

All cable ties which are released or cut open when removing must be fitted in the same position when installing.

– Remove intake manifold ⇒ page 94 .
– Remove coolant pipe (right-side) ⇒ page 179 .
– Move pipes clear of crankcase breather hose.
– Remove crankcase breather hose -arrows-.

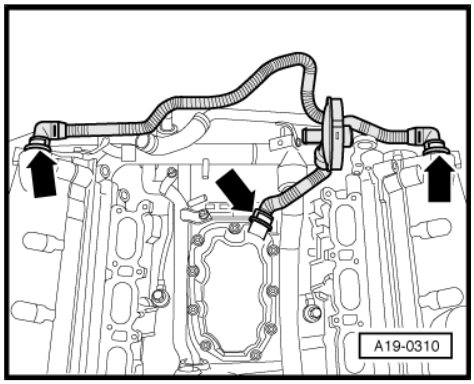

– Unscrew bracket for connectors (rear centre) from bulkhead.
– Remove electrical connectors -1 ... 5- from bracket.

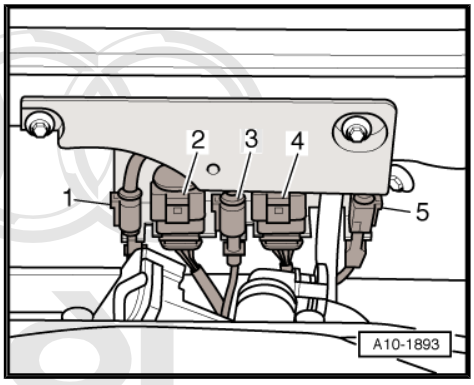

– Disconnect coolant hose -4-.
– Unscrew bolts -2- and nut -5-, and detach secondary air pipe.
– Disconnect vacuum hose -3- leading to combination valve.
– Unscrew bolts -1- and take off combination valve for secondary air system.
– Disconnect coolant hose -6-.

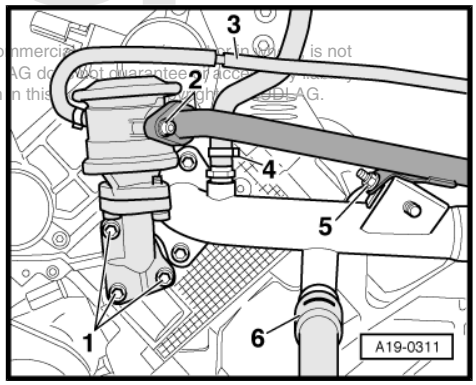

Protected by copyright. Copying for private or commercial purposes, in part or in whole, is not permitted unless authorised by AUDI AG. AUDI AG does not guarantee or accept any liability with respect to the correctness of information in this document. Copyright by AUDI AG.

Note

Shown from rear with engine removed for illustration purposes.

– Unplug electrical connector -2- from coolant temperature sender -G2- / coolant temperature sender -G62- .
– Unscrew power steering hydraulic pipe at coolant pipe (rear) -1-.

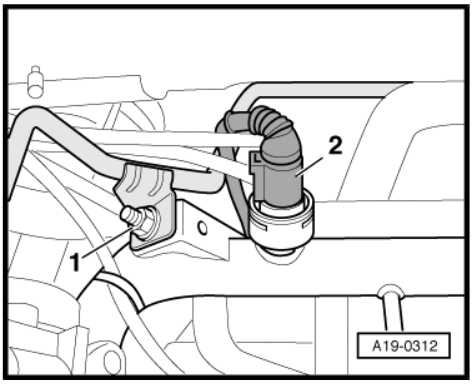

– Unbolt retaining clamp -1- for electrical wiring harness from rear coolant pipe (right-side).
– Repeat procedure on opposite side of vehicle.
– Disconnect coolant hose -2- leading to alternator at coolant pipe (rear).

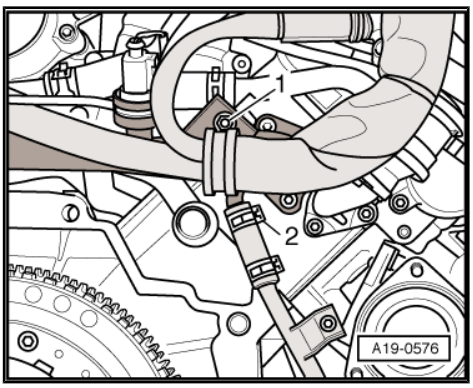

Note

Shown from rear with engine removed for illustration purposes.

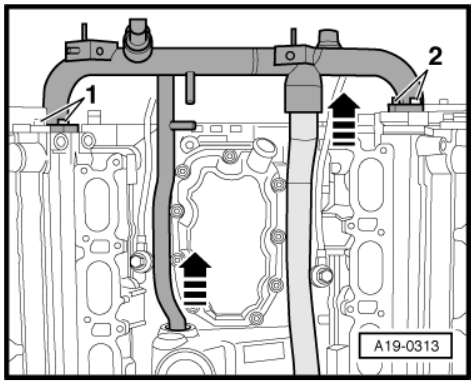

– Unscrew bolts -1- and -2-.
– Pull coolant pipe off towards rear.

Installing

Installation is carried out in the reverse order; note the following:

Note

- *Secure all hose connections with the correct type of hose clips (same as original equipment) ⇒ Parts catalogue.*
- *Renew seals and O-rings.*

– Before installing, clean and smooth down sealing surfaces for O-rings as required.
– Lubricate new O-rings with “G12” and slide onto coolant pipe.
– Install coolant pipe (right-side) ⇒ page 179 .
– Fill cooling system ⇒ page 165 .

Tightening torques

Component	Nm
Coolant pipe (rear) to cylinder head	10
Retaining clamp for wiring harness to coolant pipe (rear)	10
Power steering pressure pipe to coolant pipe	20
Connecting pipe to combination valve	10
Connecting pipe to coolant pipe (rear)	10

Protected by copyright. Copying for private or commercial purposes, in part or in whole, is not permitted unless authorised by AUDI AG. AUDI AG does not guarantee or accept any liability with respect to the correctness of information in this document. Copyright by AUDI AG.

1.11 Removing and installing coolant pipe leading to alternator

Removing

– Activate jacking mode ⇒ Running gear, front-wheel drive and four-wheel drive; Rep. Gr. 43 ; Operating the air suspension .

WARNING

Hot steam or hot coolant can escape when expansion tank is opened; cover filler cap with cloth and open carefully.

– Open filler cap on coolant expansion tank.
– Remove front right wheel.

Note

Secure brake disc with wheel bolts.

– Vehicles with auxiliary heater: remove bolts -arrows- securing exhaust pipe for auxiliary/additional heater to noise insulation.

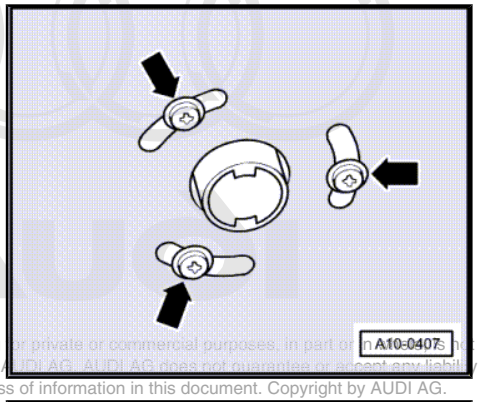

Protected by copyright. Copying for private or commercial purposes, in part or in whole, is not permitted unless authorised by AUDI AG. AUDI AG does not guarantee or accept any liability with respect to the correctness of information in this document. Copyright by AUDI AG.

– Loosen quick release fasteners -1- and -2- and remove noise insulation parts.

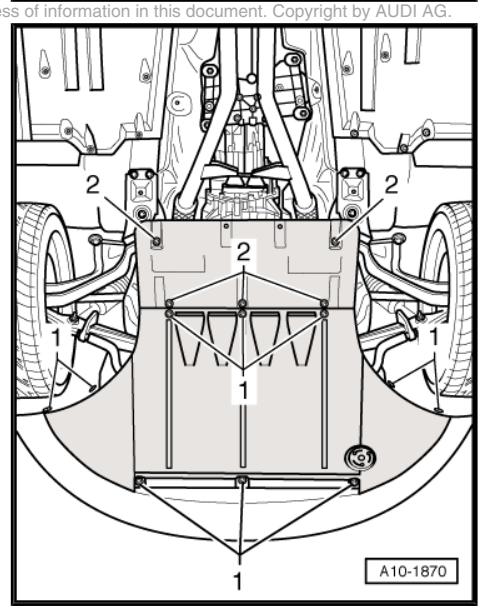

– Unbolt bracket for noise insulation -arrows-.
– Drain off coolant ⇒ page 163 .

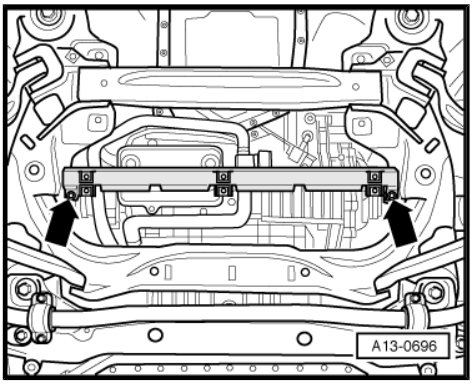

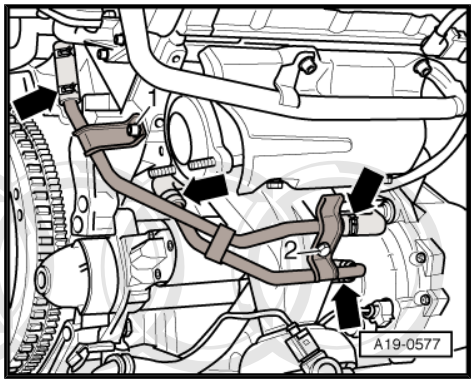

– Remove combination valve for secondary air (right-side) ⇒ page 236 .
– Unscrew bolts -1- and -2-.
– Disconnect hoses -arrows-.
– Detach coolant pipe.

Note

Shown from rear with engine removed for illustration purposes.

Installing

Installation is carried out in the reverse order; note the following:

Note

Secure all hose connections with the correct type of hose clips (same as original equipment) ⇒ Parts catalogue.

Copyright. Copying for private or commercial purposes, in part or in whole, is not permitted unless authorised by AUDI AG. AUDI AG does not guarantee or accept any liability with respect to the correctness of information in this document. Copyright by AUDI AG.

– Install combination valve for secondary air (right-side) ⇒ page 236 .
– Deactivate jacking mode ⇒ Running gear, front-wheel drive and four-wheel drive; Rep. Gr. 43 ; Operating the air suspension .
– Fill cooling system ⇒ page 165 .

Tightening torques

Component		Nm
Coolant pipe to	Engine support	10
Alternator to	Cylinder head	10

2 Cooling system - on body

2.1 Radiator and radiator fan - exploded view of components

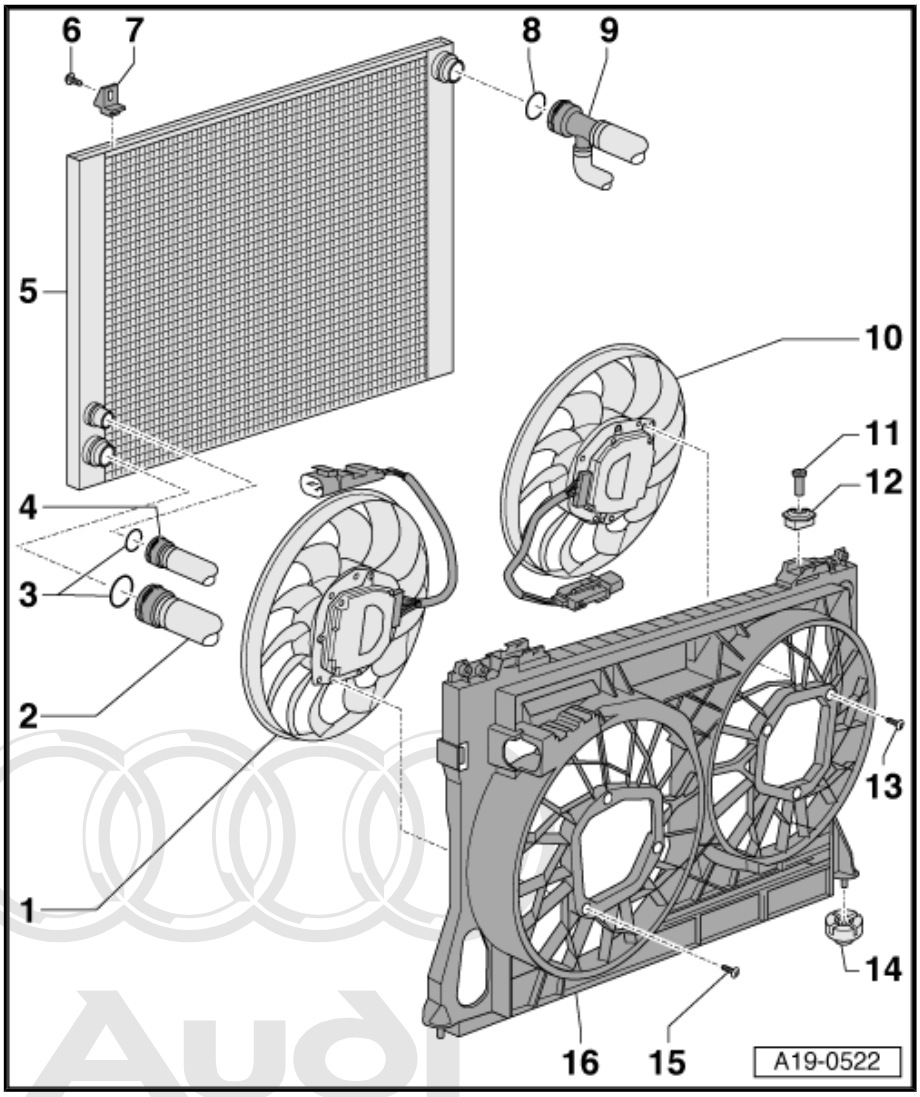

1 - Radiator fan -V7-
- ❑ With radiator fan control unit -J293-
- ❑ Removing and installing ⇒ page 190

2 - Coolant hose
- ❑ To detach, release retaining clip

3 - O-ring
- ❑ Renew

4 - Not installed

5 - Radiator
- ❑ Removing and installing ⇒ page 185
- ❑ After replacing, renew coolant completely

6 - 6 Nm

7 - Bracket for radiator

8 - O-ring
- ❑ Renew

9 - Coolant hose
- ❑ To detach, release retaining clip

10 - Radiator fan -2- -V177-
- ❑ With radiator fan control unit 2 -J671-
- ❑ Removing and installing ⇒ page 190

11 - Retaining pin

12 - Rubber buffer
- ❑ Use screwdriver to release and pull off

13 - 10 Nm

14 - Rubber bush

15 - 10 Nm

16 - Radiator cowl
- ❑ Removing and installing ⇒ page 189

Any reproduction or distribution for private or commercial purposes, in part or in whole, is not permitted unless authorised by AUDI AG. AUDI AG does not guarantee or accept any liability with respect to the correctness of information in this document. Copyright by AUDI AG.

2.2 Removing and installing radiator

Special tools and workshop equipment required

♦ Drip tray -V.A.G 1306-

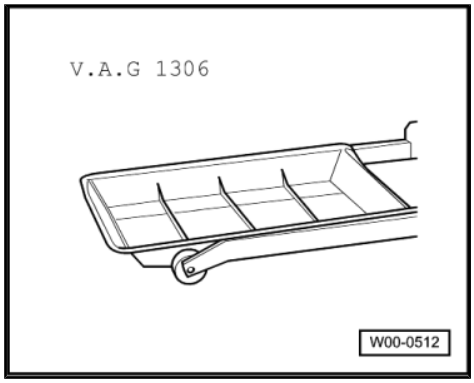

♦ Hose clip pliers -V.A.G 1921-

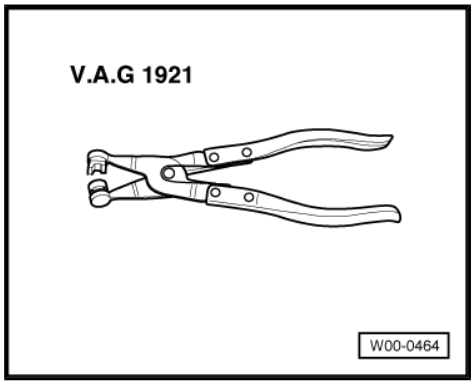

Removing

– Activate jacking mode ⇒ Running gear, front-wheel drive and four-wheel drive; Rep. Gr. 43 ; Operating the air suspension .

WARNING

Hot steam or hot coolant can escape when expansion tank is opened; cover filler cap with cloth and open carefully.

– Open filler cap on coolant expansion tank.

– Remove both front wheels.

Note

Secure brake discs with wheel bolts.

– Vehicles with auxiliary heater: remove bolts -arrows- securing exhaust pipe for auxiliary/additional heater to noise insulation.

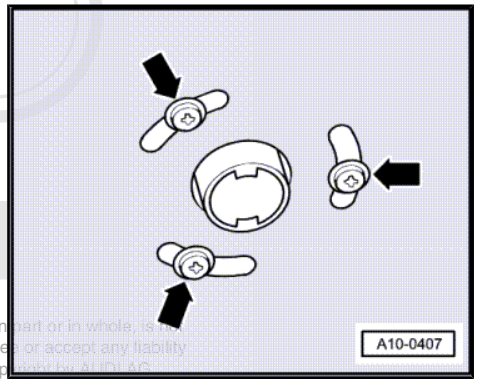

Protected by copyright. Copying for private or commercial purposes, in part or in whole, is not permitted unless authorised by AUDI AG. AUDI AG does not guarantee or accept any liability with respect to the correctness of information in this document. Copyright by AUDI AG.

– Loosen quick release fasteners -1- and remove front noise insulation.

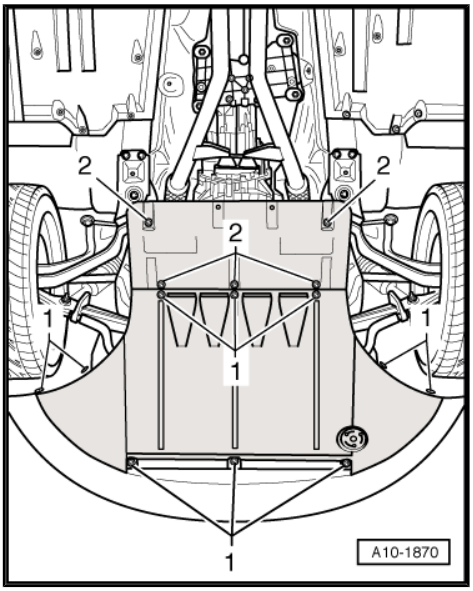

– Place drip tray -V.A.G 1306- under engine.

– Detach coolant hose from bottom left of radiator -arrow- and drain off coolant.

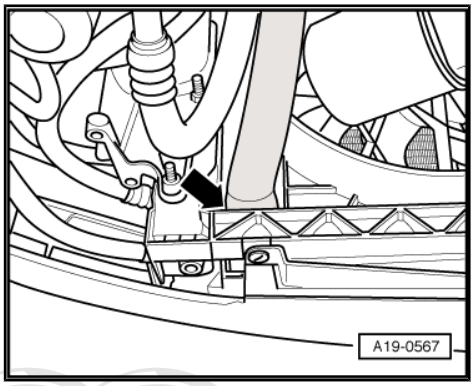

– Disconnect coolant hoses -arrows- from ATF cooler and drain off coolant.

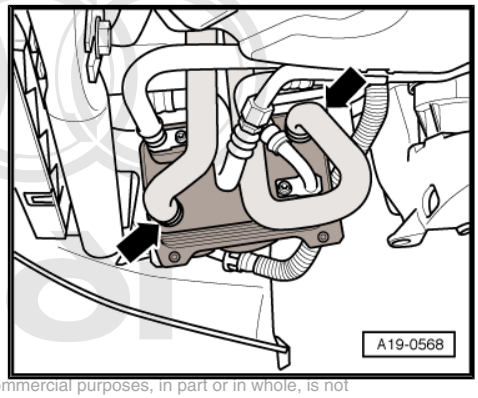

Protected by copyright. Copying for private or commercial purposes, in part or in whole, is not permitted unless authorised by AUDI AG. AUDI AG does not guarantee or assume any liability with respect to the correctness of information in this document. Copyright by AUDI AG.

– Also disconnect coolant hose at oil cooler -arrow- and drain off remaining coolant.

– Remove front section of wheel housing liner (front left and front right) ⇒ General body repairs, exterior; Rep. Gr. 66 .

– Remove front bumper ⇒ General body repairs, exterior; Rep. Gr. 63 .

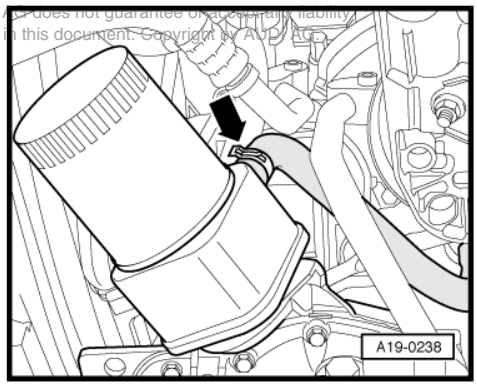

– Remove upper coolant hose -2- from radiator by pulling off retaining clip.

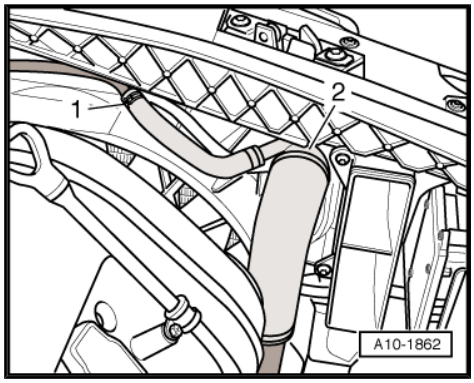

Note

Ignore item marked -1-.

– Unplug electrical connectors -1 ... 6- and move electrical wires clear.

– Remove bracket for ambient temperature sensor -G17- by turning bracket 90° in clockwise direction and then detaching it.

Protected by copyright. Copying for private or commercial purposes, in part or in whole, is not permitted unless authorised by AUDI AG. No liability can be accepted for the correctness of information in this document. Copyright by AUDI AG.

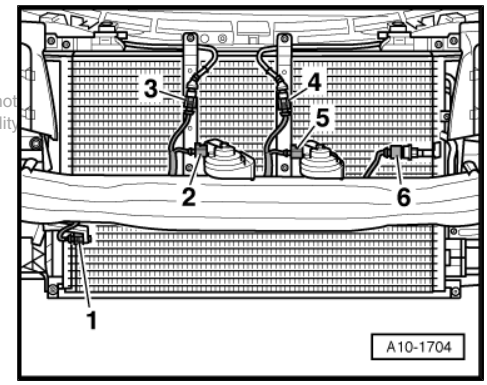

– Unplug electrical connectors -1- and -2- from struts.

– Unscrew bolts -arrows-.

– Remove bumper together with struts.

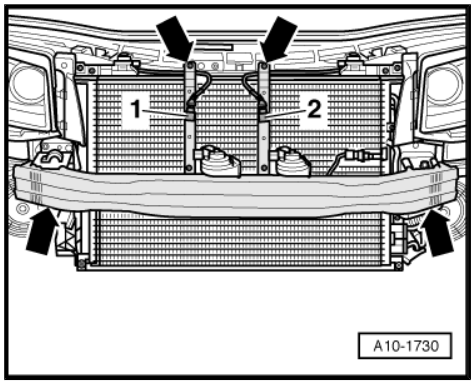

WARNING

Refrigerant circuit of air conditioner must not be opened.

Note

To prevent damage to the air conditioner compressor and coolant pipes/hoses, ensure that the pipes and hoses are not stretched, kinked or bent.

– Unscrew bolts -arrows-.

– Swivel down condenser together with cooler for power-assisted steering and secure by tying to engine.

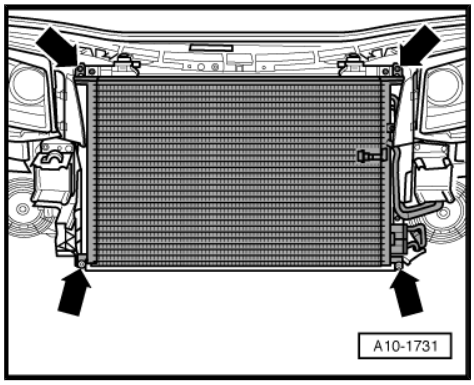

– Remove the two brackets for radiator -arrows-.

– Tilt top of radiator forwards slightly and lift out of lock carrier.

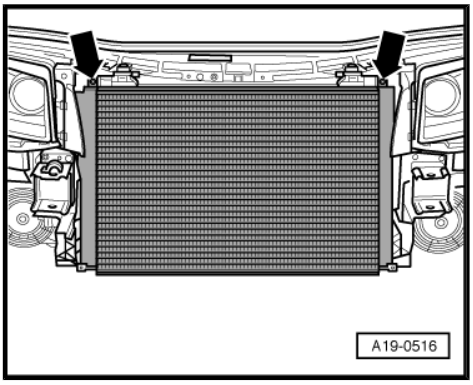

Installing

Installation is carried out in the reverse order; note the following:

Note

Secure all hose connections with the correct type of hose clips (same as original equipment) ⇒ Parts catalogue.

– Install front bumper ⇒ General body repairs, exterior; Rep. Gr. 63 .

– Install front section of wheel housing liner (front left and front right) ⇒ General body repairs, exterior; Rep. Gr. 66 .

– Deactivate jacking mode ⇒ Running gear, front-wheel drive and four-wheel drive; Rep. Gr. 43 ; Operating the air suspension .

– Fill cooling system ⇒ page 165 .

Note

After renewing the radiator you must also renew entire coolant.

Tightening torque

Component	Nm
Bracket for radiator to lock carrier	6
Condenser to lock carrier	6
Struts to lock carrier	9
Bumper to impact damper	23

Protected by copyright. Copying for private or commercial purposes, in part or in whole, is not permitted unless authorised by AUDI AG. AUDI AG does not guarantee or accept any liability with respect to the correctness of information in this document. Copyright by AUDI AG.

2.3 Removing and installing radiator cowl

Removing

– Drain off coolant ⇒ page 163 .

– Remove radiator ⇒ page 185 .

– Unplug electrical connector -arrow- for radiator fan (right-side).

– Move wires clear at rear of lock carrier.

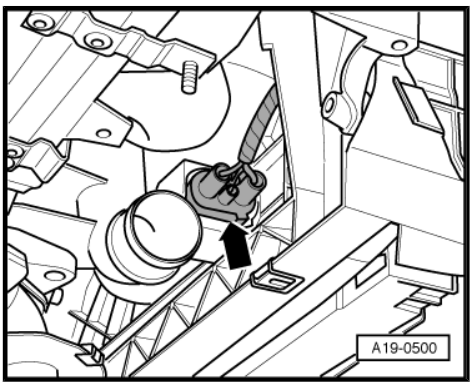

– Release both retaining pins for radiator cowl and pull out upwards -arrows-.

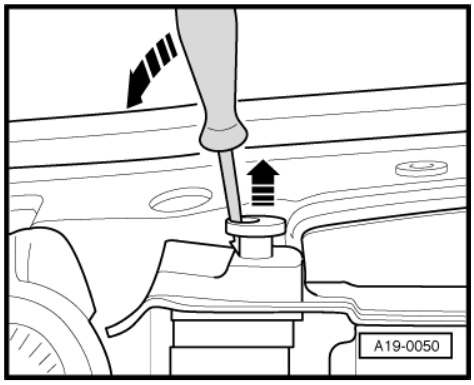

– Tilt top edge of radiator cowl forwards.
– Unplug electrical connector -arrow- for radiator fans; to do so, reach behind the radiator cowl.
– Remove radiator cowl.

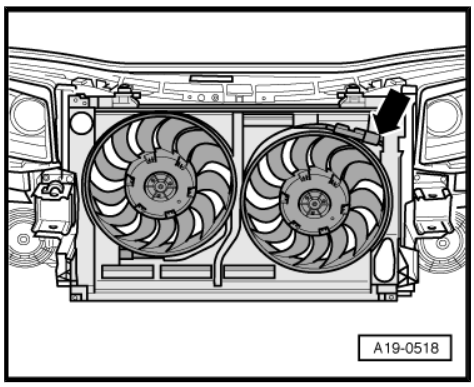

Installing

Installation is carried out in the reverse order; note the following:

– Install radiator ⇒ page 185 .
– Fill cooling system ⇒ page 165 .

Tightening torque

Component	Nm
Radiator fan to radiator cowl	10 [23]

23) Renew bolt.

2.4 Removing and installing radiator fan

Removing

– Drain off coolant ⇒ page 163 .
– Remove radiator ⇒ page 185 .
– Remove radiator cowl ⇒ page 189 .
– Unscrew bolts -arrows-.
– Unclip electrical connectors and move electrical wires clear.
– Remove radiator fans.

Protected by copyright. Copying for private or commercial purposes, in part or in whole, is not permitted unless authorised by AUDI AG. AUDI AG does not guarantee or accept any liability with respect to the correctness of information in this document. Co

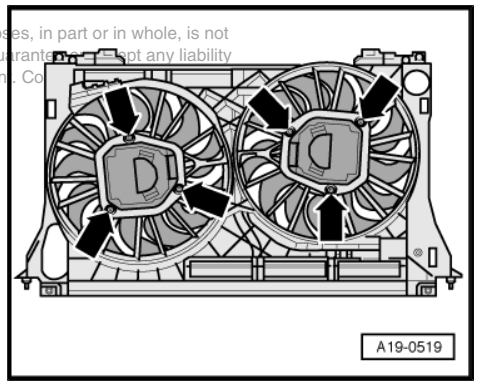

Installing

Installation is carried out in the reverse order; note the following:

– Install radiator cowl ⇒ page 189 .
– Install radiator ⇒ page 185 .
– Fill cooling system ⇒ page 165 .

Tightening torque

Component	Nm
Radiator fan to radiator cowl	10 [24]

24) Renew bolt.

2.5 Checking cooling system for leaks

Special tools and workshop equipment required

- Cooling system tester -V.A.G 1274-
- Adapter for cooling system tester -V.A.G 1274/8-
- Adapter for cooling system tester -V.A.G 1274/9-

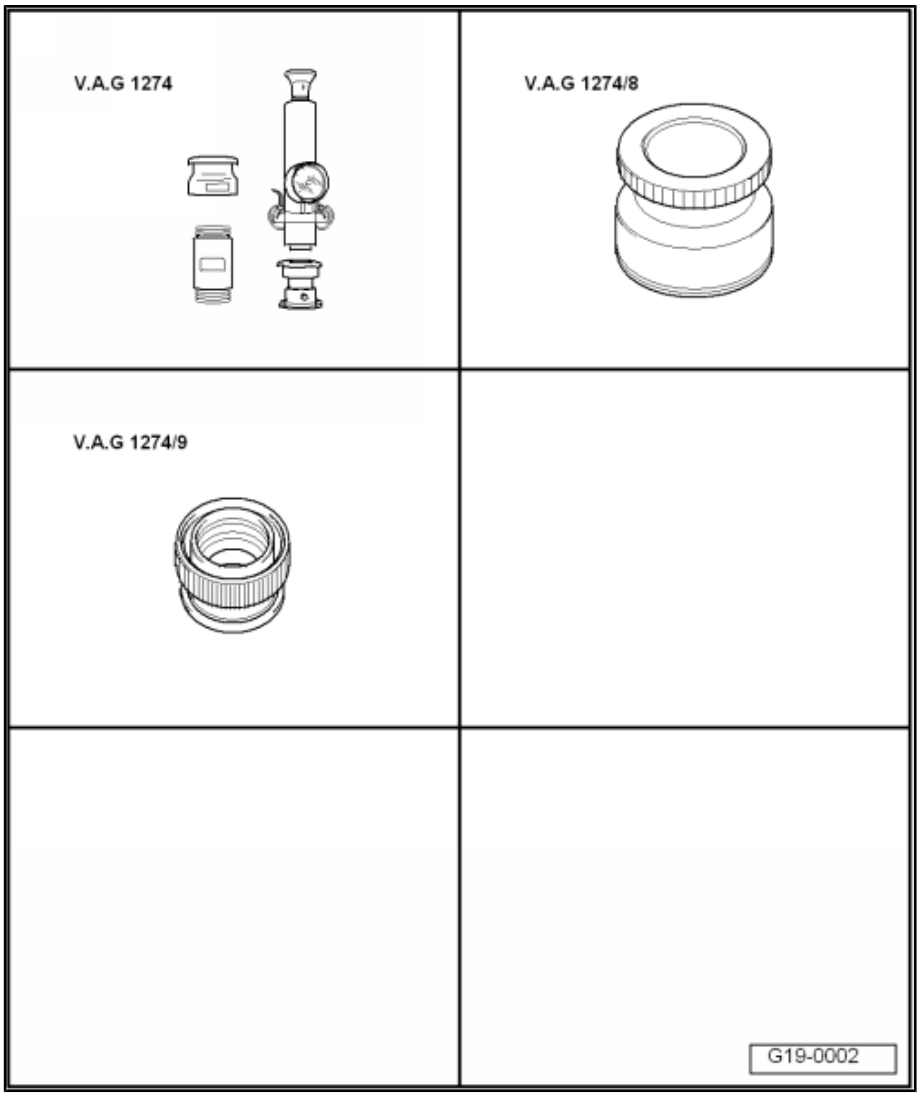

Test condition

- Engine must be warm.

Test sequence

> ⚠ **WARNING**
>
> *Hot steam or hot coolant can escape when expansion tank is opened; cover filler cap with cloth and open carefully.*

– Open filler cap on coolant expansion tank.

Protected by copyright. Copying for private or commercial purposes, in part or in whole, is not permitted unless authorised by AUDI AG. AUDI AG does not guarantee or accept any liability with respect to the correctness of information in this document. Copyright by AUDI AG.

– Attach cooling system tester -V.A.G 1274- with adapter -V.A.G 1274/8- to expansion tank.
– Use hand pump on cooling system tester to create a pressure of approx. 1.0 bar.

If the pressure drops:

– Trace leak and repair.

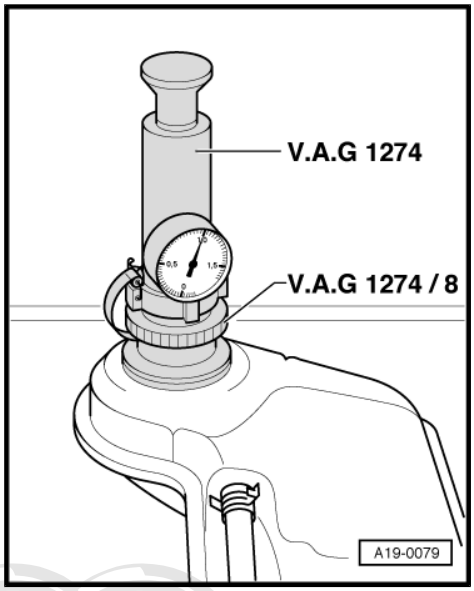

Checking pressure relief valve in filler cap

– Attach cooling system tester -V.A.G 1274- with adapter -V.A.G 1274/9- to filler cap.
– Use hand pump on cooling system tester to create pressure.
• The pressure relief valve should open at pressure of 1.4 ... 1.6 bar.

If the relief valve does not open as described:

– Renew the filler cap.

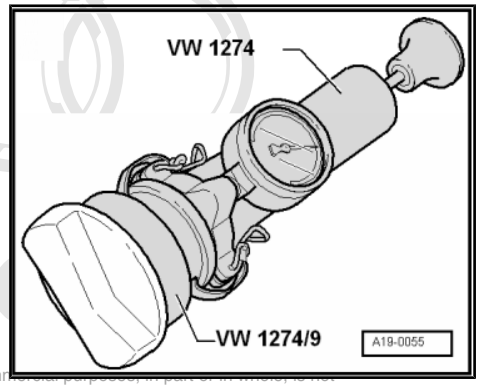

Protected by copyright. Copying for private or commercial purposes, in part or in whole, is not permitted unless authorised by AUDI AG. AUDI AG does not guarantee or accept any liability with respect to the correctness of information in this document. Copyright by AUDI AG.

26 – Exhaust system

1 Removing and installing parts of exhaust system

Note

- *Renew gaskets and self-locking nuts.*
- *After working on the exhaust system, ensure that the system is not under stress and that it has sufficient clearance from the body. If necessary, loosen clamps and align silencers and exhaust pipes so that sufficient clearance is maintained to the body at all points and the mountings are evenly loaded.*
- *The flexible joint in front exhaust pipe must not be bent more than 10 ° - damage can otherwise occur.*

1.1 Exhaust system - exploded view of components

1 - Centre silencer

- ❑ Centre and rear silencer are one unit as original equipment. Can be renewed individually for repair purposes
- ❑ Cutting location ⇒ page 198
- ❑ Align exhaust system so it is free of stress ⇒ page 215

2 - Rubber mounting

- ❑ Check pretension, refer to "Stress-free alignment of exhaust system" ⇒ page 215

3 - 23 Nm

4 - Bolt

5 - 27 Nm

- ❑ Renew

6 - Exhaust manifold

- ❑ Removing and installing: left-side ⇒ page 212 , right-side ⇒ page 213

7 - Gasket

- ❑ Renew

8 - Front exhaust pipe with catalytic converter

- ❑ With flexible joint
- ❑ Do not bend flexible joint more than 10° - otherwise it can be damaged
- ❑ Protect against knocks and impact

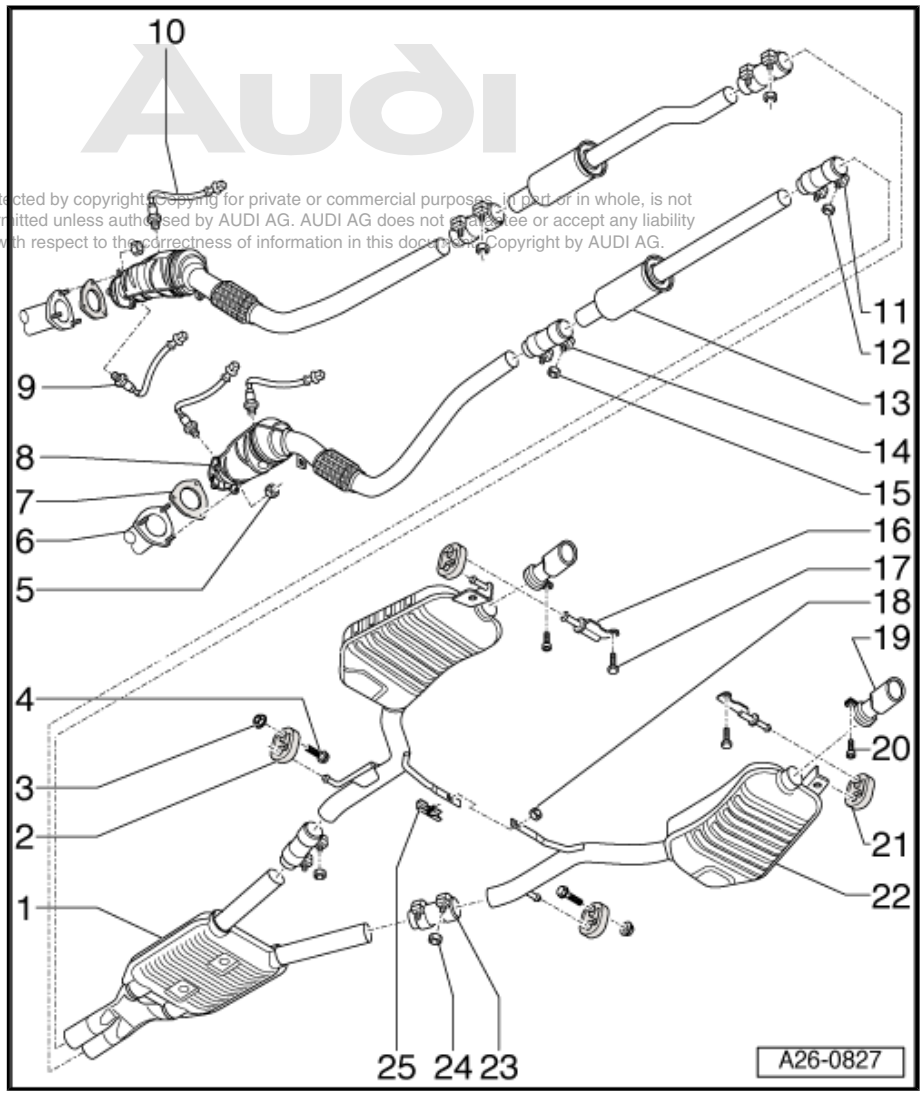

Protected by copyright. Copying for private or commercial purposes, in part or in whole, is not permitted unless authorised by AUDI AG. AUDI AG does not guarantee or accept any liability with respect to the correctness of information in this document. Copyright by AUDI AG.

- ❑ Combined with front silencer as original equipment. Can be renewed individually for repair purposes
- ❑ Removing and installing: left-side ⇒ page 199 , right-side ⇒ page 205
- ❑ Cutting location ⇒ page 197
- ❑ Mounting components: left-side ⇒ page 196 , right-side ⇒ page 196
- ❑ Align exhaust system so it is free of stress ⇒ page 215

9 - Lambda probe before catalytic converter

- ❑ Threads of new lambda probes are already greased with assembly paste; the paste must not get into the slots on the probe body
- ❑ When re-using the old Lambda probe, grease thread with high-temperature lubricant; the paste must not get into the slots of the probe body; High-temperature lubricant ⇒ Parts catalogue
- ❑ Removing and installing ⇒ Motronic injection and ignition system (6-cyl.); Rep. Gr. 24
- ❑ Tighten to 55 Nm

10 - Lambda probe after catalytic converter

- ❑ Threads of new lambda probes are already greased with assembly paste; the paste must not get into the slots on the probe body
- ❑ When re-using the old Lambda probe, grease thread with high-temperature lubricant; the paste must not get into the slots of the probe body; High-temperature lubricant ⇒ Parts catalogue
- ❑ Removing and installing ⇒ Motronic injection and ignition system (6-cyl.); Rep. Gr. 24
- ❑ Tighten to 55 Nm

11 - Clamp (centre)

- ❑ Position clamp so that it aligns with centre of cutting location
- ❑ Installation position ⇒ page 195
- ❑ Before tightening bolt connection, align exhaust system free of stress ⇒ page 215
- ❑ Tighten bolt connections evenly

12 - 23 Nm

13 - Front silencer

- ❑ As original equipment, front silencer and front exhaust pipe/catalytic converter are supplied as one unit. Can be renewed individually for repair purposes
- ❑ Removing and installing: left-side ⇒ page 199 , right-side ⇒ page 205
- ❑ Cutting location ⇒ page 197
- ❑ Align exhaust system so it is free of stress ⇒ page 215

14 - Clamp (front)

- ❑ To enable individual renewal of front exhaust pipe/catalytic converter and front silencer
- ❑ Position clamp so that it aligns with centre of cutting location
- ❑ Installation position ⇒ page 195
- ❑ Before tightening bolt connection, align exhaust system free of stress ⇒ page 215
- ❑ Tighten bolt connections evenly

15 - 23 Nm

16 - Mounting

Protected by copyright. Copying for private or commercial purposes, in part or in whole, is not permitted unless authorised by AUDI AG. AUDI AG does not guarantee or accept any liability with respect to the correctness of information in this document. Copyright by AUDI AG.

17 - 22 Nm

18 - 23 Nm

- ❑ Renew

19 - Tailpipe

- ❑ Align, refer to "Stress-free alignment of exhaust system" ⇒ page 215

20 - 30 Nm

- ❑ Bolt strength 10.9

21 - Rubber mounting

- ❑ Check pretension, refer to "Stress-free alignment of exhaust system" ⇒ page 215

22 - Rear silencer

- ❑ Rear and centre silencer are one unit as original equipment. Can be renewed individually for repair purposes
- ❑ Cutting location ⇒ page 198
- ❑ Align exhaust system so it is free of stress ⇒ page 215

23 - Clamp (rear)

- ❑ For separate replacement of centre and rear silencers
- ❑ Position clamp so that it aligns with centre of cutting location
- ❑ Installation position ⇒ page 195
- ❑ Before tightening bolt connection, align exhaust system free of stress ⇒ page 215
- ❑ Tighten bolt connections evenly

24 - 23 Nm

25 - Connecting bracket

Installation position of front clamps

– Install clamps so that the bolt ends do not protrude beyond bottom of clamp.

• Bolt connections face outwards.

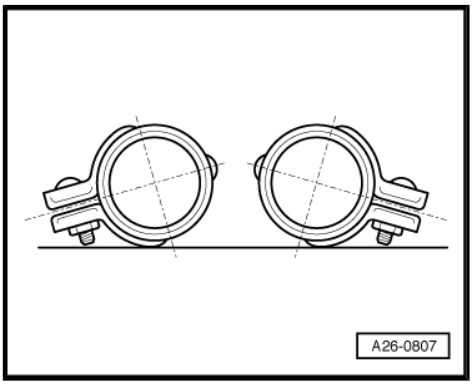

Installation position of middle clamps

– Install clamps so that the bolt ends do not protrude beyond bottom of clamp.

• Bolt connections face outwards.

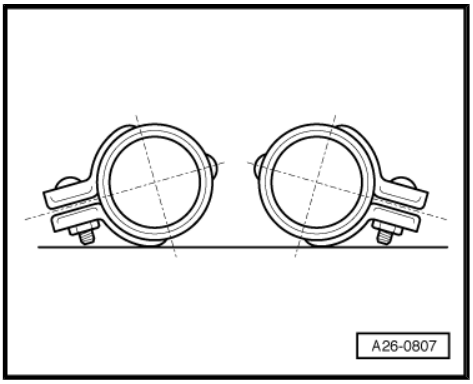

Installation position of rear clamps

– Install clamps so that the bolt ends do not protrude beyond bottom of clamp.

• Bolt connections face one another.

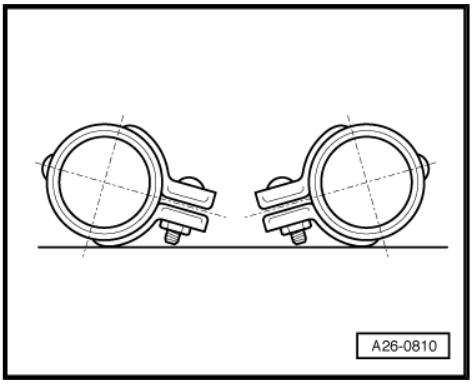

Protected by copyright. Copying for private or commercial purposes, in part or in whole, is not permitted unless authorised by AUDI AG. AUDI AG does not guarantee or accept any liability with respect to the correctness of information in this document. Copyright by AUDI AG.

Mounting components (left-side)

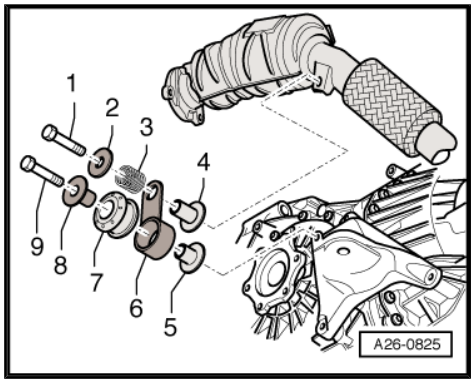

1 - Bolt -25 Nm-
2 - Washer
3 - Compression spring
4 - Spacer sleeve
5 - Spacer sleeve
6 - Bracket
7 - Buffer
8 - Spacer sleeve
9 - Bolt -25 Nm-

Mounting components (right-side)

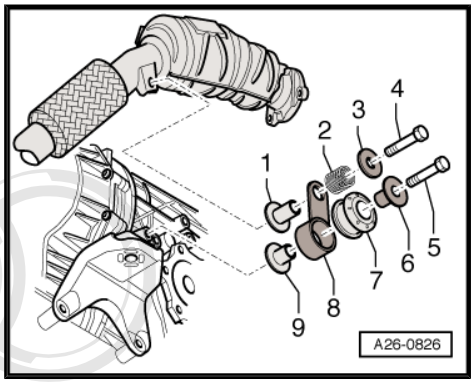

1 - Spacer sleeve
2 - Compression spring
3 - Washer
4 - Bolt -25 Nm-
5 - Bolt -25 Nm-
6 - Spacer sleeve
7 - Buffer
8 - Bracket
9 - Spacer sleeve

Centre mounting components on vehicles with front-wheel drive

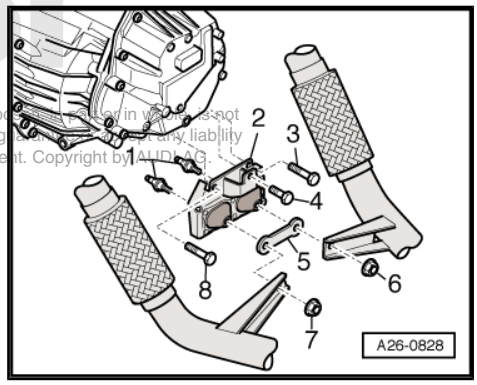

1 - Studs
2 - Bracket
3 - Bolt -25 Nm-
4 - Bolt -25 Nm-
5 - Bracket
6 - Nut, self-locking -25 Nm-
7 - Nut, self-locking -25 Nm-
8 - Bolt -25 Nm-

Protected by copyright. Copying for private or commercial purposes, in whole or in part, is not permitted unless authorised by AUDI AG. AUDI AG does not give any warranty or assume any liability with respect to the correctness of information in this document. Copyright by AUDI AG.

Centre mounting components on vehicles with four-wheel drive

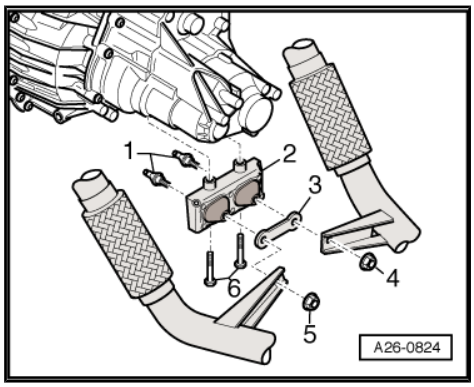

1 - Studs
2 - Bracket
3 - Bracket
4 - Nut, self-locking -25 Nm-
5 - Nut, self-locking -25 Nm-
6 - Bolts -25 Nm-

1.2 Separating front exhaust pipe and front silencer

The connecting pipe can be cut through at the point marked so that the front exhaust pipe/catalytic converter and front silencer can be renewed separately.

Cutting location is marked by an indentation on circumference of exhaust pipe.

Special tools and workshop equipment required

- Chain tube cutter -VAS 6254-

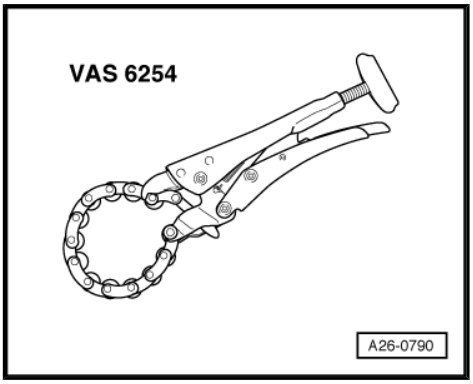

- Safety goggles

Procedure

> ⚠ WARNING
>
> *Wear safety goggles.*

Protected by copyright. Copying for private or commercial purposes, in part or in whole, is not permitted unless authorized by AUDI AG. AUDI AG does not guarantee the accuracy, integrity, with respect to the contents of this document.

– Separate the relevant exhaust pipe using the chain tube cutter -VAS 6254- to cut at a right angle; cutting location is shown in illustration -arrows-.

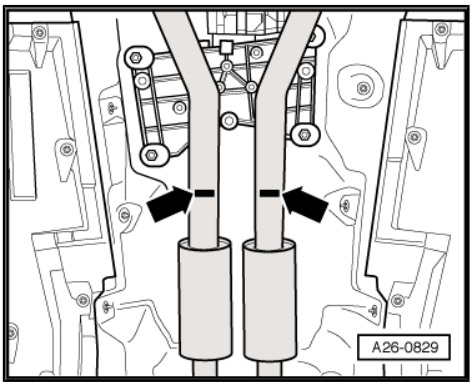

– Position the relevant clamp so that it aligns with centre of cutting location -arrows-.

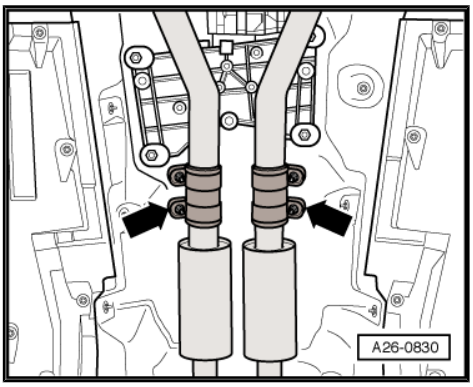

– Install clamps so that the bolt ends do not protrude beyond bottom of clamp.

• Bolt connections face outwards.

– Before tightening bolt connection, align exhaust system free of stress ⇒ page 215 .

– Tighten bolt connections of clamps evenly to 23 Nm.

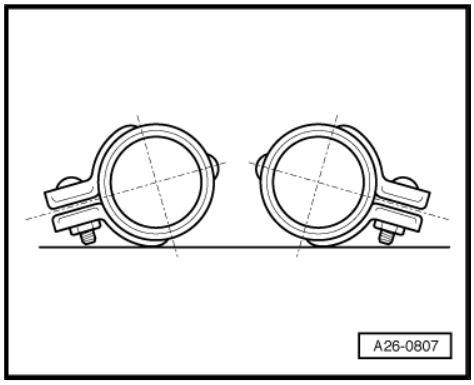

1.3 Separating centre and rear silencers

The connecting pipe can be cut through at the cutting location in order to renew the centre and rear silencers separately.

Cutting location is marked by an indentation on circumference of exhaust pipe.

This document is provided by AUDI AG for training purposes only. The content of this document is not complete, unless authorised by AUDI AG. AUDI AG does not guarantee or accept any liability with respect to the correctness of information in this document. Copyright by AUDI AG.

Special tools and workshop equipment required

♦ Chain tube cutter -VAS 6254-

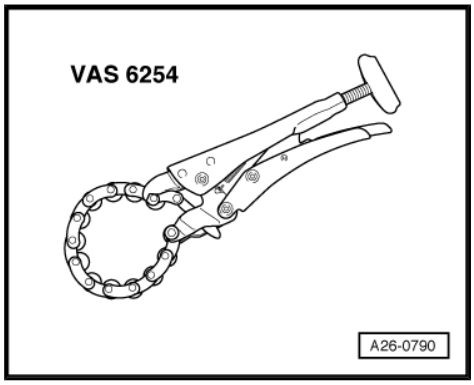

♦ Safety goggles

Procedure

> ⚠ **WARNING**
>
> ***Wear safety goggles.***

– Separate the relevant exhaust pipe using the chain tube cutter -VAS 6254- to cut at a right angle; cutting location is shown in illustration -arrows-.

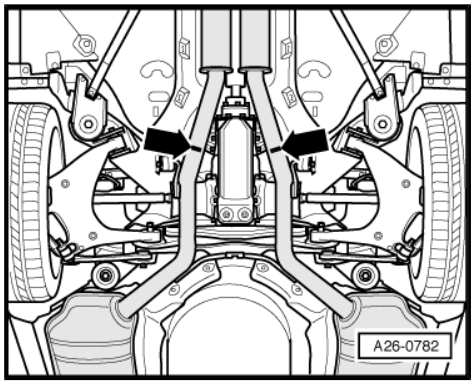

– Position the relevant clamp so that it aligns with centre of cutting location -arrows-.

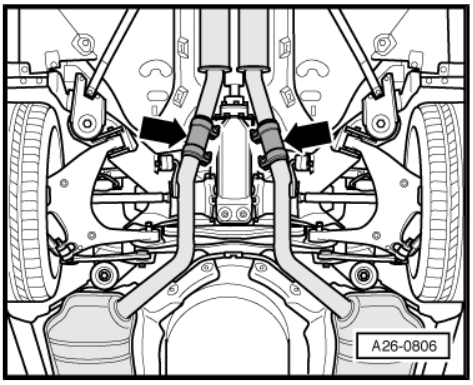

– Install clamps so that the bolt ends do not protrude beyond bottom of clamp.

• Bolted connections face inwards.

– Before tightening bolt connection, align exhaust system free of stress ⇒ page 215 .

– Tighten bolt connections of clamps evenly to 23 Nm.

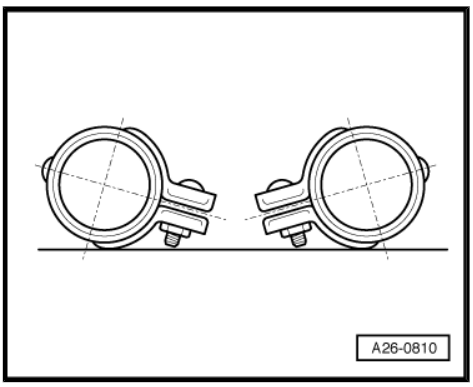

1.4 Removing and installing front exhaust pipe (left-side) with catalytic converter

Special tools and workshop equipment required

♦ Engine/gearbox jack -V.A.G 1383 A-

Protected by copyright. Copying for private or commercial purposes, in part or in whole, is not permitted unless authorised by AUDI AG. AUDI AG does not guarantee or accept any liability with respect to the correctness of information in this document. Copyright by AUDI AG.

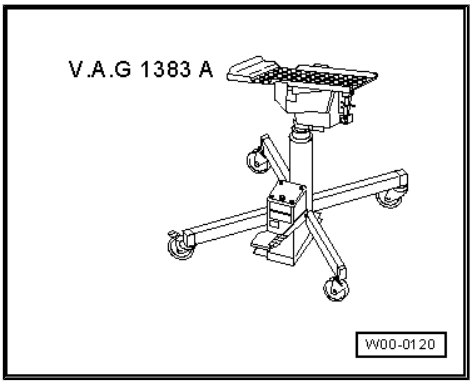

Removing

– Activate jacking mode ⇒ Running gear, front-wheel drive and four-wheel drive; Rep. Gr. 43 ; Operating the air suspension .

– Pull off rear engine cover -arrows-.

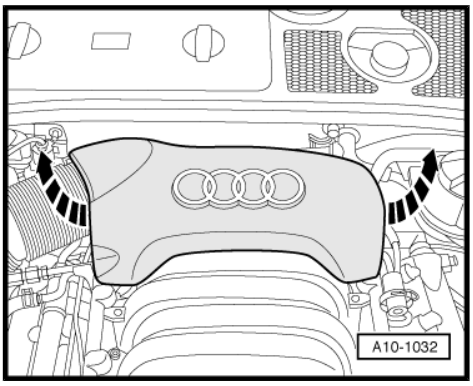

– Remove cover for right suspension turret; to do so, detach spreader clips -1- and unscrew bolted joint -2-.
– Pull cover out of retainers -arrows-.

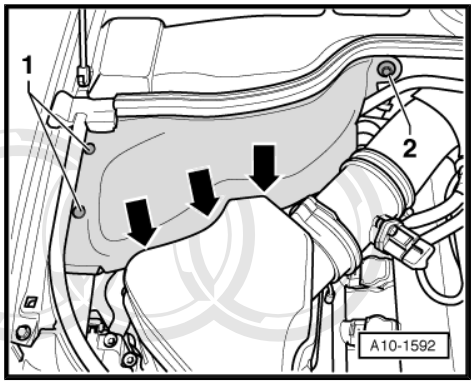

– Unscrew bolts for solenoid valve retaining plate -3- (-arrows-).
– Detach air intake hose -1- at air mass meter -G70- .
– Pull hose -4- off air duct -2-.

Protected by copyright. Copying for private or commercial purposes, in whole or in part, is not permitted unless authorised by AUDI AG. AUDI AG does not guarantee or assume any liability with respect to the correctness of information. Copyright by AUDI AG.

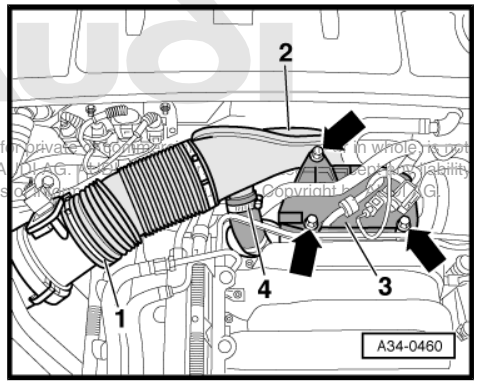

– Unscrew bolt -arrow- and pull air duct -2- off throttle valve module -J338- .
– If fitted, pull hose -1- off at air duct.

Note

For illustration purposes, the air duct is shown from rear and with engine removed.

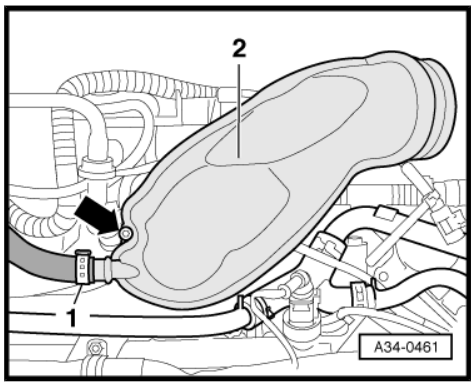

– Detach electrical connector -2- from bracket and unplug.

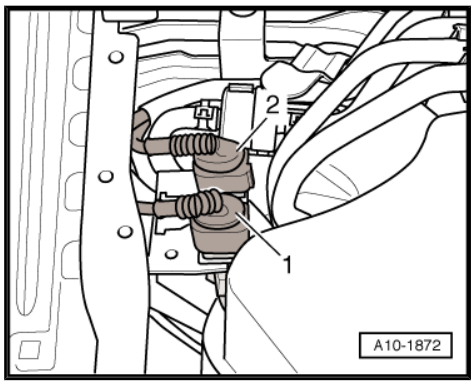

– Unscrew bracket for connectors (rear centre) from bulkhead.
– Remove electrical connectors -1 ... 5- from bracket.
– Detach electrical connector -4-.
– Guide wiring for Lambda probes downwards.

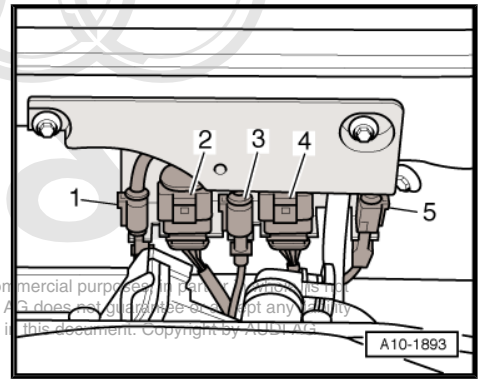

Protected by copyright. Copying for private or commercial purposes, in part or in whole, is not permitted unless authorised by AUDI AG. AUDI AG does not guarantee or accept any liability with respect to the correctness of information in this document. Copyright by AUDI AG

– Detach vacuum hose -arrow- going to brake servo at bulkhead.

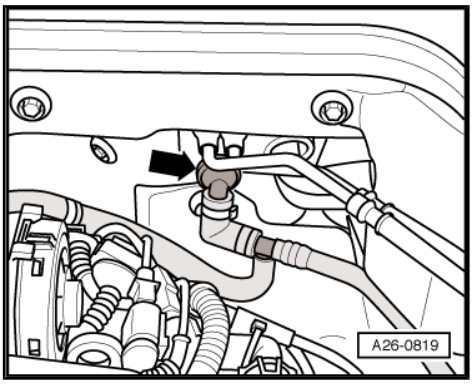

– Unscrew nut -2- (accessible from above) connecting front exhaust pipe to exhaust manifold.

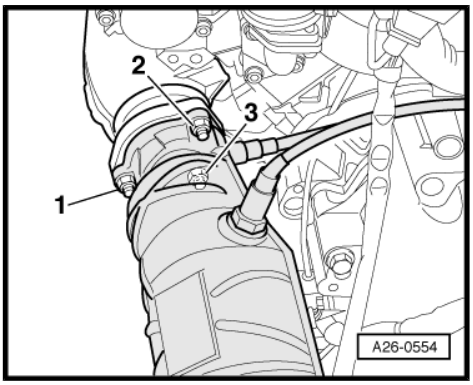

Note

Shown from rear with engine removed for illustration purposes.

– Remove front left wheel.

Note

Secure brake disc with wheel bolts.

– Vehicles with auxiliary heater: remove bolts -arrows- securing exhaust pipe for auxiliary/additional heater to noise insulation.

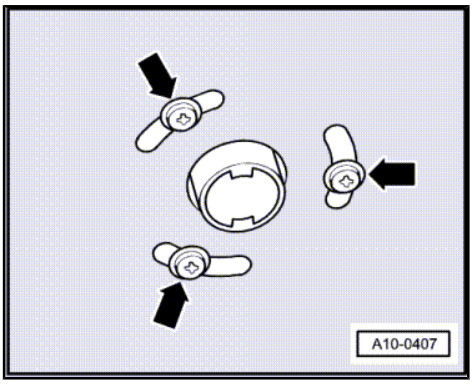

– Loosen quick release fasteners -1- and -2- and remove noise insulation parts.

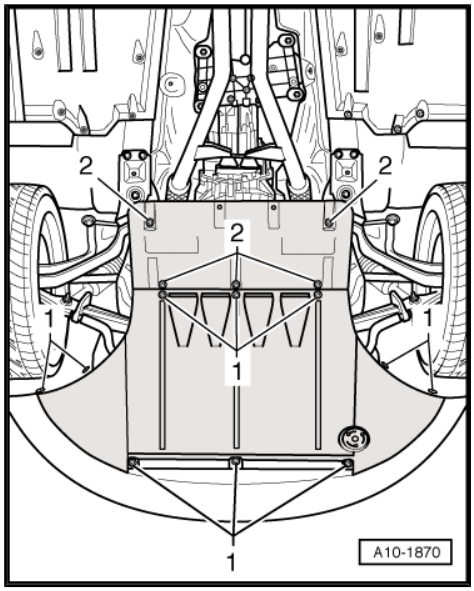

– Unbolt heat shield -1- for drive shaft (left-side).

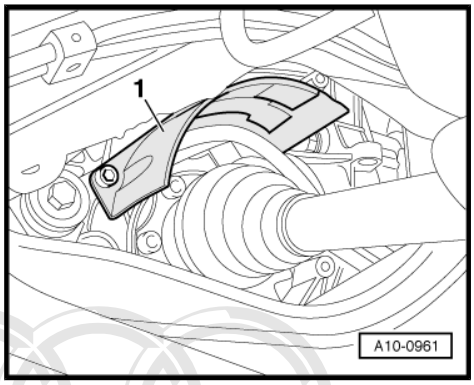

– Unscrew bolts -1- and -2- and remove bracket for front exhaust pipe.

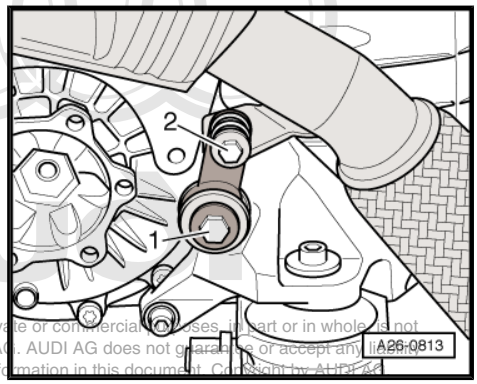

Protected by copyright. Copying for private or commercial purposes, in part or in whole, is not permitted unless authorised by AUDI AG. AUDI AG does not guarantee or accept any liability with respect to the correctness of information in this document. Copyright by AUDI AG

– Remove front cross member -arrows-.

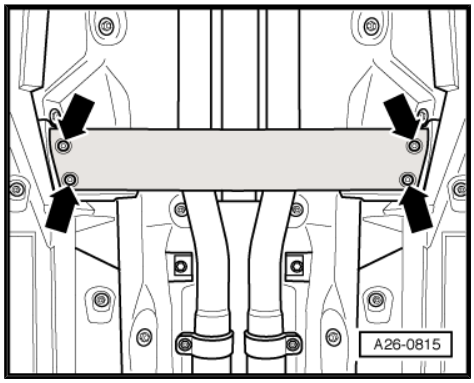

Disconnect exhaust system at clamp (left-side) -1-.

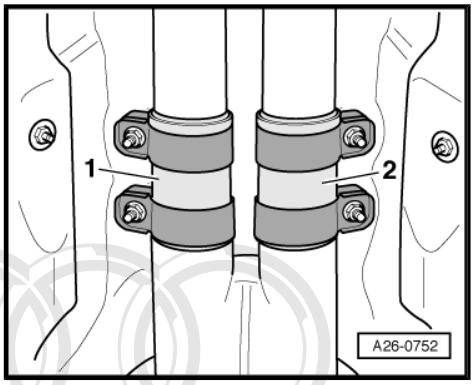

Note

The flexible joint in front exhaust pipe must not be bent more than 10° - damage can otherwise occur.

– Unscrew nut -left arrow- at mounting bracket for front exhaust pipe (left-side).

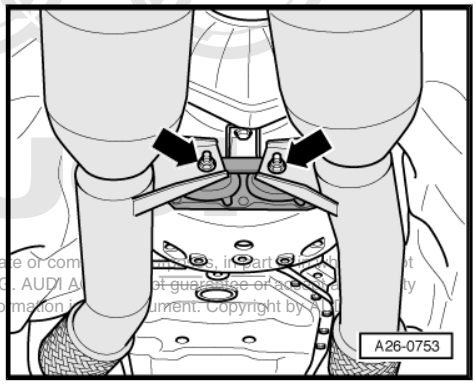

Protected by copyright. Copying for private or com[illegible] permitted unless authorised by AUDI AG. AUDI A[illegible] with respect to the correctness of inf[illegible]ment. Copyright by AU[illegible]

– Detach universal support -V.A.G 1359/2- from engine and gearbox jack -V.A.G 1383 A- and in their place put a wooden block -1- on the lifting arm.
– Using engine and gearbox jack -V.A.G 1383 A- and wooden block raise gearbox slightly.

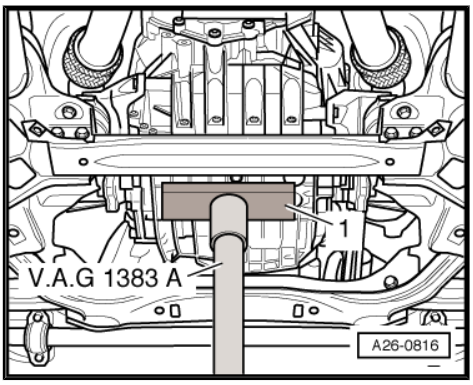

– Unplug electrical connector -1- at gearbox mounting (left-side).
– Unscrew bolts -arrows- and remove gearbox mounting (left-side).

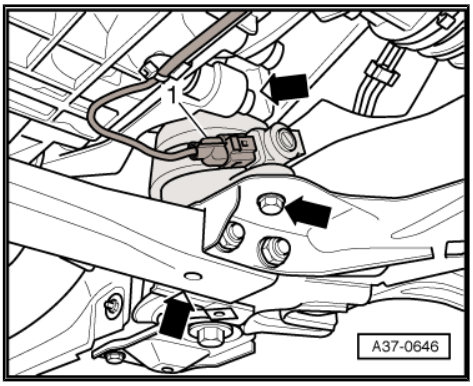

– Unbolt gearbox support (left-side) -arrows-.

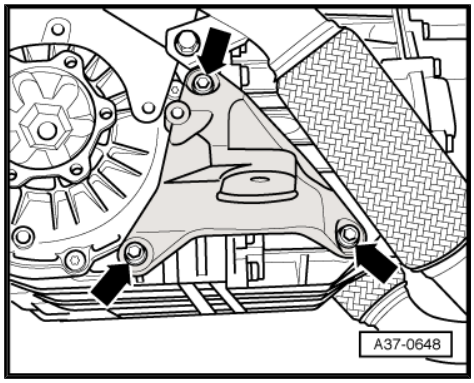

Protected by copyright. Copying for private or commercial purposes, in part or in whole, is not permitted unless authorised by AUDI AG. AUDI AG does not guarantee or accept any liability with respect to the correctness of information in this document. Copyright by AUDI AG.

– Move Lambda probe wires clear.

– Unscrew nuts -1- and -3- (accessible from below) connecting front exhaust pipe to exhaust manifold.

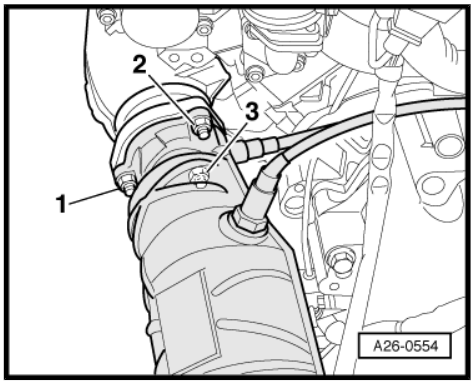

Note

Shown in illustration with engine removed.

– Remove front exhaust pipe with catalytic converter.

Installing

Installation is carried out in the reverse order; note the following:

Note

- *Renew gaskets, O-ring and self-locking nuts.*
- *Secure all hose connections with the correct type of hose clips (same as original equipment) ⇒ Parts catalogue.*
- *Fit all cable ties in the original position when installing.*
- *When installing, the Lambda probe wires must always be re-attached at the same locations to prevent probe wires from coming into contact with exhaust pipe.*

– Install gearbox support and gearbox mounting ⇒ multitronic 01J, front-wheel drive; Rep. Gr. 37 or ⇒ multitronic 01T, four-wheel drive; Rep. Gr. 37 .

– Align exhaust system free of stress ⇒ page 215 .

Note

Mounting components for exhaust system: ⇒ page 196 to ⇒ page 196 .

– Deactivate jacking mode ⇒ Running gear, front-wheel drive and four-wheel drive; Rep. Gr. 43 ; Operating the air suspension .

Protected by copyright. Copying for private or commercial purposes, in part or in whole, is not permitted unless authorised by AUDI AG. AUDI AG does not guarantee or accept any liability with respect to the correctness of information in this document. Copyright by AUDI AG.

Tightening torques

Component	Nm
Front exhaust pipe with catalytic converter to exhaust manifold	27 [25)]
Mounting bracket to front exhaust pipe	25
Mounting bracket to gearbox support	25
Drive shaft heat shield to gearbox	23
Front exhaust pipe to gearbox bracket	25 [25)]
Front cross member to body	23
Air duct to intake manifold	10

25) Renew nuts.

1.5 Removing and installing front exhaust pipe (right-side) with catalytic converter

Special tools and workshop equipment required

♦ Engine/gearbox jack -V.A.G 1383 A-

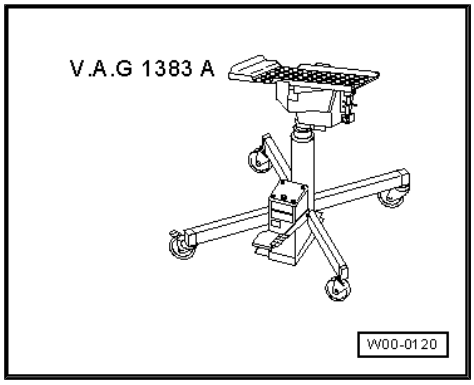

Removing

– Activate jacking mode ⇒ Running gear, front-wheel drive and four-wheel drive; Rep. Gr. 43 ; Operating the air suspension .

– Pull off rear engine cover -arrows-.

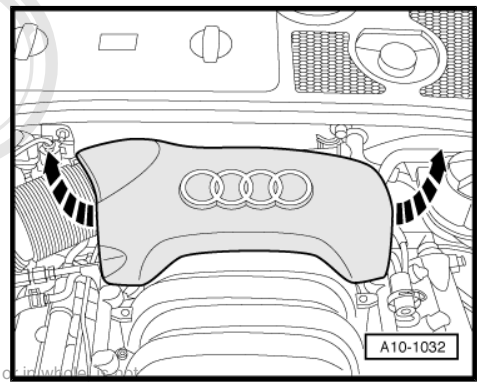

Protected by copyright. Copying for private or commercial purposes, in part or in whole, is not permitted unless authorised by AUDI AG. AUDI AG does not guarantee or accept any liability with respect to the correctness of information in this document. Copyright by AUDI AG.

– Remove cover for right suspension turret; to do so, detach spreader clips -1- and unscrew bolted joint -2-.

– Pull cover out of retainers -arrows-.

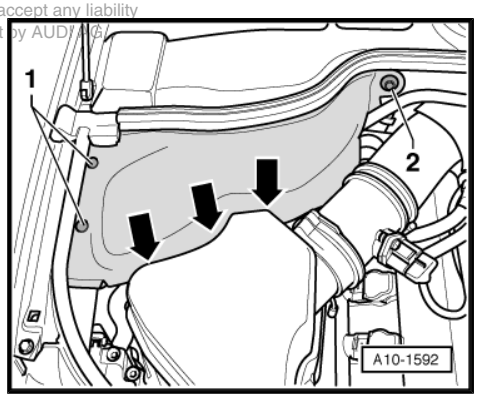

– Unscrew bolts for solenoid valve retaining plate -3- (-arrows-).

– Detach air intake hose -1- at air mass meter -G70- .

– Pull hose -4- off air duct -2-.

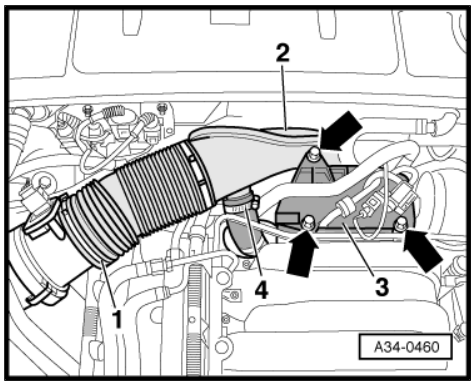

– Unscrew bolt -arrow- and disconnect air duct -2- from throttle valve module -J338- .
– If fitted, pull hose -1- off at air duct.

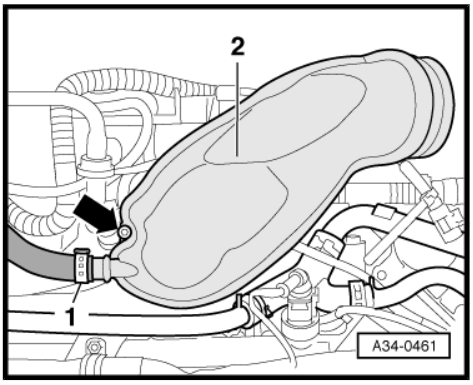

Note

For illustration purposes, the air duct is shown from rear and with engine removed.

– Detach electrical connector -1- from bracket and unplug.

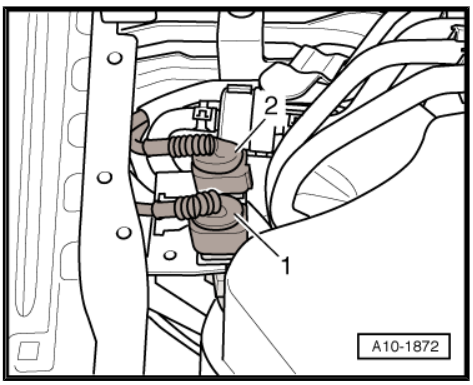

Protected by copyright. Copying for private or commercial purposes, in part or in whole, is not permitted unless authorised by AUDI AG. AUDI AG does not guarantee or accept any liability with respect to the correctness of information in this document. Copyright by AUDI AG.

– Detach electrical connector -2- from bracket and unplug.
– Guide wiring for Lambda probes downwards.

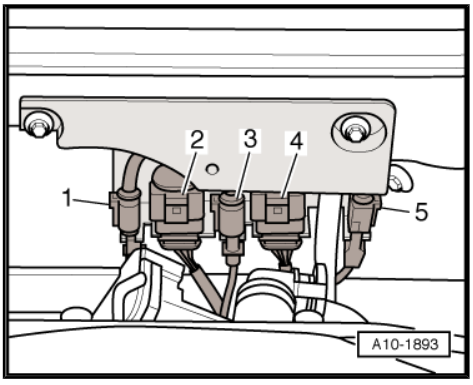

– Unscrew nut -2- (accessible from above) connecting front exhaust pipe to exhaust manifold.

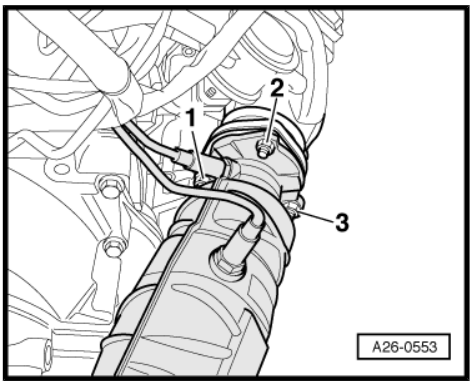

Note

Shown from rear with engine removed for illustration purposes.

– Remove front right wheel.

Note

Secure brake disc with wheel bolts.

– Vehicles with auxiliary heater: remove bolts -arrows- securing exhaust pipe for auxiliary/additional heater to noise insulation.

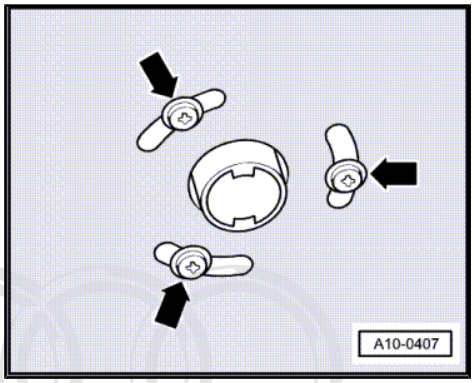

– Loosen quick release fasteners -1- and -2- and remove noise insulation parts.

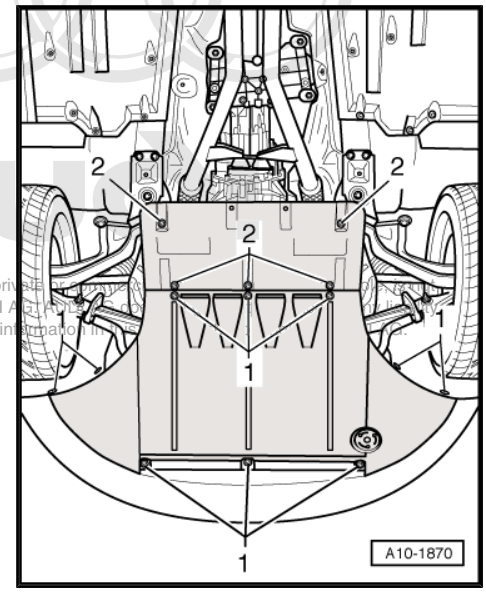

Protected by copyright. Copying for private or commercial purposes, in part or in whole, is not permitted unless authorised by AUDI AG. AUDI AG does not guarantee or assume any liability with respect to the correctness of information in this document.

– Unbolt heat shield -1- for drive shaft (right-side).

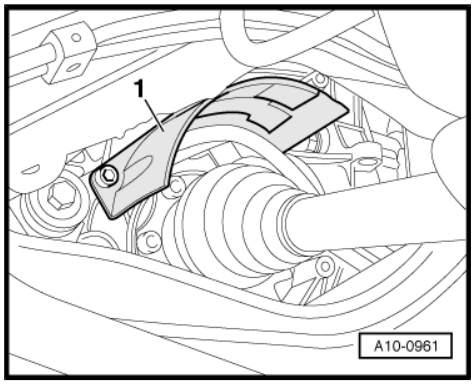

– Unscrew bolts -1- and -2- and remove bracket for front exhaust pipe.

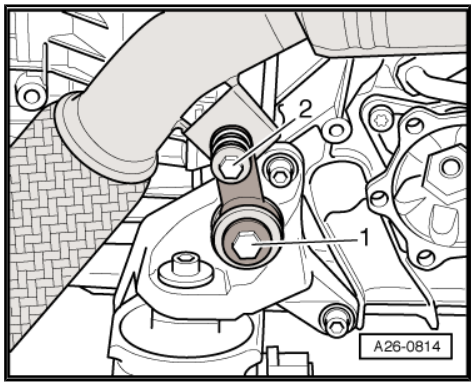

– Remove front cross member -arrows-.

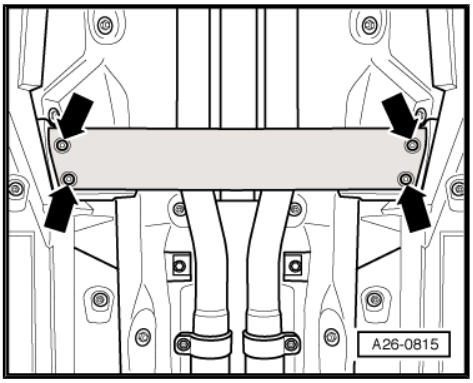

– Disconnect exhaust system at clamp (right-side) -2-.

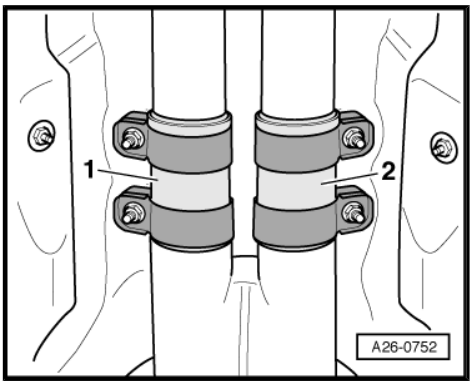

Note

The flexible joint in front exhaust pipe must not be bent more than 10 ° - damage can otherwise occur.

– Unscrew nut -right arrow- at mounting bracket for front exhaust pipe (right-side).

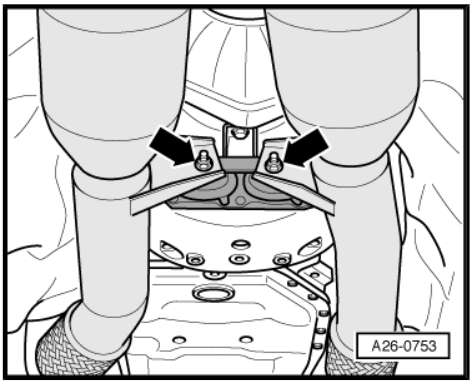

– Detach universal support -V.A.G 1359/2- from engine and gearbox jack -V.A.G 1383 A- and in their place put a wooden block -1- on the lifting arm.

– Using engine and gearbox jack -V.A.G 1383 A- and wooden block raise gearbox slightly.

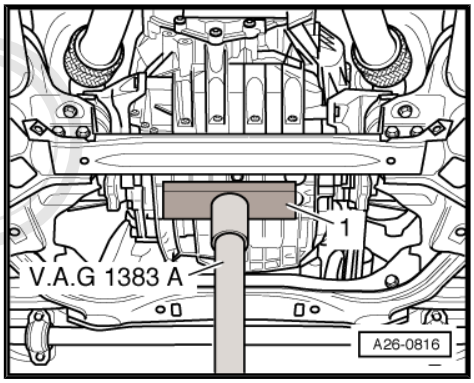

Protected by copyright. Copying for private or commercial purposes, in part or in whole, is not permitted unless authorised by AUDI AG. AUDI AG does not guarantee or accept any liability with respect to the correctness of information in this document. Copyright by AUDI AG.

– Unplug electrical connector -1- at gearbox mounting (right-side).
– Unscrew bolts -arrows- and remove gearbox mounting (right-side).

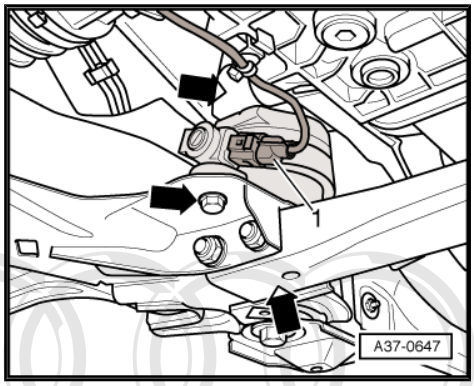

– Unbolt gearbox support (right-side) -arrows-.
– Lower gearbox slightly, making sure the heat shield on the propshaft does not become damaged.

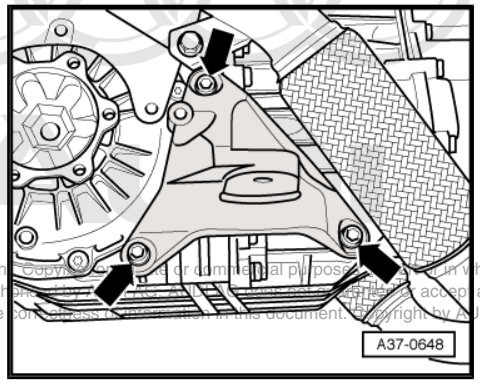

Protected by copyright. Copying for private or commercial purposes, in whole or in part, is not permitted unless authorised by AUDI AG. AUDI AG does not guarantee or accept any liability with respect to the correctness of information in this document. Copyright by AUDI AG.

– Move Lambda probe wires clear.

– Unscrew nuts -1- and -3- (accessible from below) connecting front exhaust pipe to exhaust manifold.

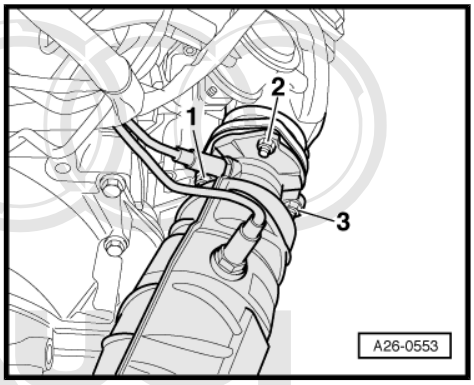

Note

Shown in illustration with engine removed.

– Remove front exhaust pipe with catalytic converter.

Installing

Installation is carried out in the reverse order; note the following:

Protected by copyright. Copying for private or commercial purposes, in part or in whole, is not permitted unless authorised by AUDI AG. AUDI AG does not guarantee or accept any liability with respect to the correctness of information in this document. Copyright by AUDI AG.

Note

- *Renew gaskets, O-ring and self-locking nuts.*
- *Secure all hose connections with the correct type of hose clips (same as original equipment) ⇒ Parts catalogue.*
- *Fit all cable ties in the original positions when installing.*
- *When installing, the Lambda probe wires must always be re-attached at the same locations to prevent them from coming into contact with the exhaust pipe.*

– Install gearbox support and gearbox mounting ⇒ multitronic 01J, front-wheel drive; Rep. Gr. 37 or ⇒ multitronic 01T, four-wheel drive; Rep. Gr. 37 .

– Align exhaust system so it is free of stress ⇒ page 215 .

Note

Mounting components for exhaust system: ⇒ page 196 to ⇒ page 196 .

– Deactivate jacking mode ⇒ Running gear, front-wheel drive and four-wheel drive; Rep. Gr. 43 ; Operating the air suspension .

Tightening torques

Component	Nm
Front exhaust pipe with catalytic converter to exhaust manifold	27 [26)]
Mounting bracket to front exhaust pipe	25
Mounting bracket to gearbox support	25
Drive shaft heat shield to gearbox	23
Front exhaust pipe to gearbox bracket	25 [26)]
Front cross member to body	23
Air duct to intake manifold	10

26) Renew nuts.

1.6 Removing and installing exhaust manifold (left-side)

Removing

– Remove front exhaust pipe (left-side) together with catalytic converter ⇒ page 199 .

– Then re-install gearbox support and gearbox mounting, but only hand-tighten bolts.

– Unscrew bolt -1- at coolant pipe (rear left).

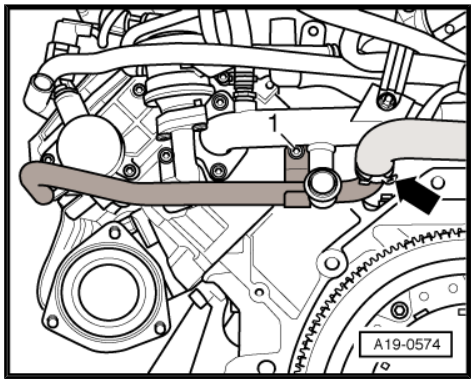

Note

Ignore -arrow-.

– Unscrew bolts -1- (accessible from above) at heat shield.

– Unscrew bolts -2- (accessible from below) and detach heat shield.

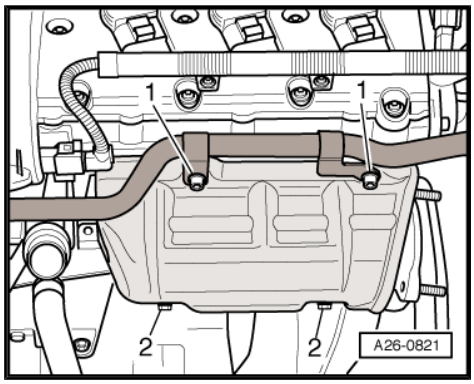

Protected by copyright. Copying for private or commercial purposes, in part or in whole, is not permitted unless authorised by AUDI AG. AUDI AG does not guarantee or accept any liability with respect to the correctness of information in this document. Copyright by AUDI AG.

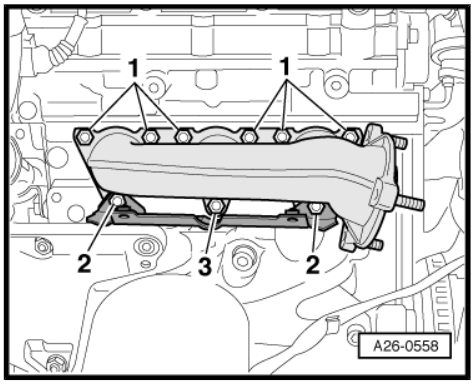

– Unscrew bolts -1- (accessible from above) on exhaust manifold.
– Unscrew nuts -2- (accessible from below) and detach bracket for heat shield.
– Unscrew nut -3- and detach exhaust manifold.

Installing

Installation is carried out in the reverse order; note the following:

Note

Renew gaskets and self-locking nuts.

– Install front exhaust pipe (left-side) together with catalytic converter ⇒ page 199 .
– Align exhaust system so it is free of stress ⇒ page 215 .

Protected by copyright. Copying for private or commercial purposes, in part or in whole, is not permitted unless authorised by AUDI AG. AUDI AG does not guarantee or accept any liability with respect to the correctness of information in this document. Copyright by AUDI AG.

Tightening torques

Component		Nm
Exhaust manifold to cylinder head		25 [27)]
Heat shield	M 6	10
for exhaust manifold	M 8	22
Coolant pipe (left-side) to cylinder head		10

27) Renew nuts.

1.7 Removing and installing exhaust manifold (right-side)

Removing

– Remove front exhaust pipe (right-side) together with catalytic converter ⇒ page 205 .
– Then re-install gearbox support and gearbox mounting, but only hand-tighten bolts.
– Detach hose -arrow- to secondary air pump at bottom of air cleaner housing.

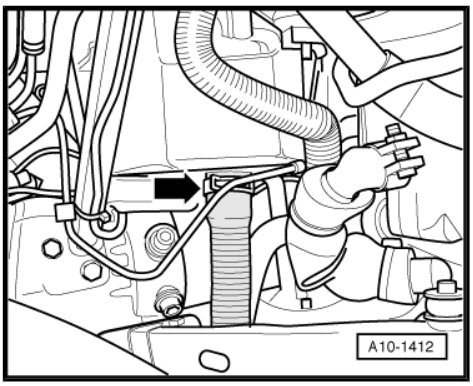

– Detach electrical connector -1-.
– Unscrew bolts -arrows- and remove air cleaner housing.

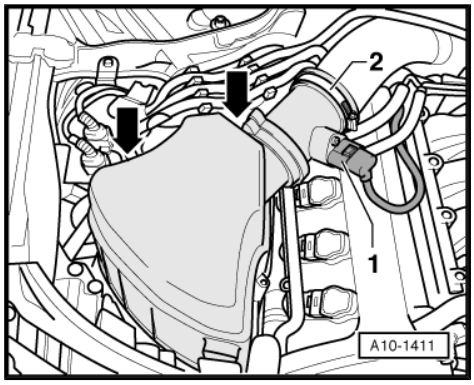

Note

Ignore item marked -2-.

– Unscrew bolts -1- and -2- at secondary air pipes.

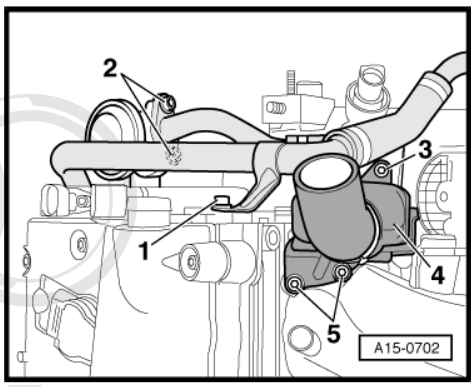

Note

The resonator -4- with bolts -3- and -5- remains installed.

– Unscrew bolts -1- and -3-.
– Disconnect hose -4- at pipe for secondary air.
– Pull guide tube -2- for oil dipstick upwards out of top section of sump and fold forwards.

Copyright by AUDI AG. This document is for internal use only and for training purposes, in part/in whole, is not permitted unless authorised by AUDI AG. AUDI AG does not guarantee or accept any liability with respect to the correctness of information in this document. Copyright by AUDI AG.

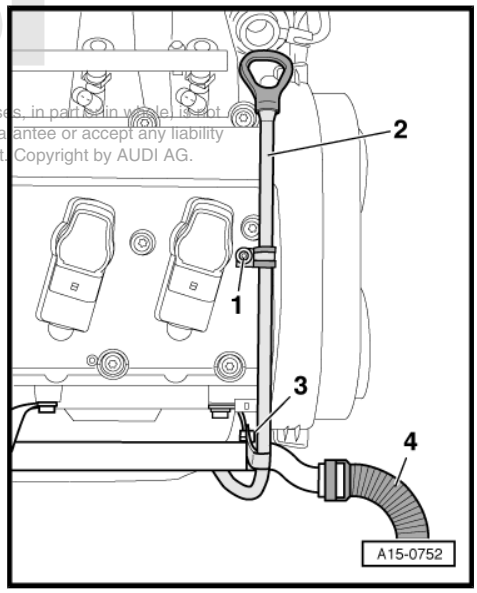

– Remove upper securing bolts -1-.
– Unscrew bolt -2- and remove heat shield.

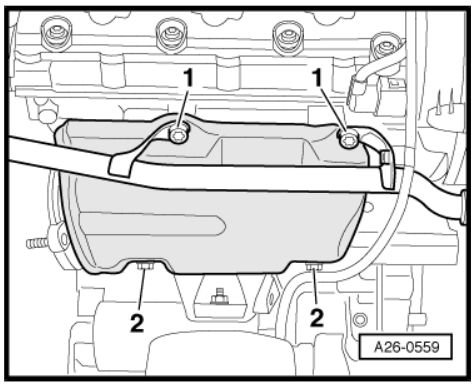

– Unscrew nuts -1- and remove bracket for heat shield.

– Unscrew nuts -2- and detach exhaust manifold.

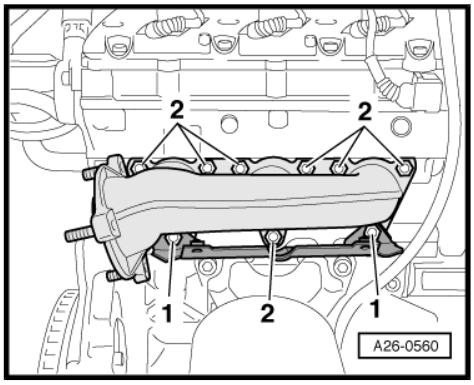

Installing

Installation is carried out in the reverse order; note the following:

Note

Renew gaskets and self-locking nuts.

– Install front exhaust pipe (right-side) together with catalytic converter ⇒ page 205 .

– Align exhaust system so it is free of stress ⇒ page 215 .

Tightening torques

Component		Nm
Exhaust manifold to cylinder head		25 [28]
Heat shield to bracket for heat shield		10
Pipe for	M 6	10
secondary air	M 8	22
Guide tube for oil dipstick to secondary air pipe		10

28) Renew nuts.

1.8 Stress-free alignment of exhaust system

Note

The exhaust system must be aligned when it is cool.

– Loosen bolt connections of all exhaust system clamps.

– Push rear silencers forwards -arrow- until pretension at rubber mountings reaches following specifications:

- Rubber mounting (front): -a- = 11 mm.
- Rubber mounting (rear): -a- = 14 mm.

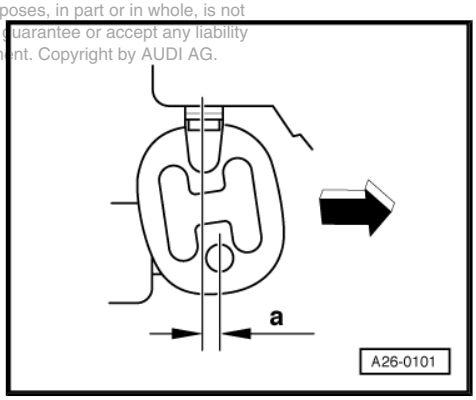

Protected by copyright. Copying for private or commercial purposes, in part or in whole, is not permitted unless authorised by AUDI AG. AUDI AG does not guarantee or accept any liability with respect to the correctness of information in this document. Copyright by AUDI AG.

– Position clamps so that they align with centre of cutting locations.
– Align front and middle clamps ...

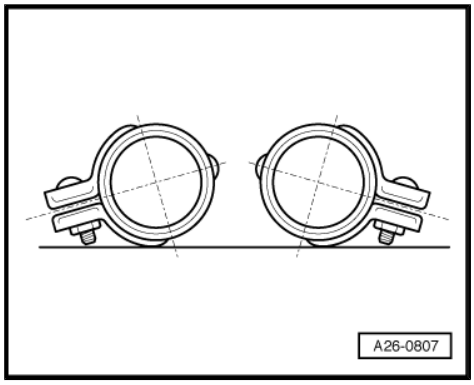

– ... as well as rear clamps, making sure that bolt ends do not protrude below bottom of clamp.
– Tighten bolt connections of clamps evenly to 23 Nm.

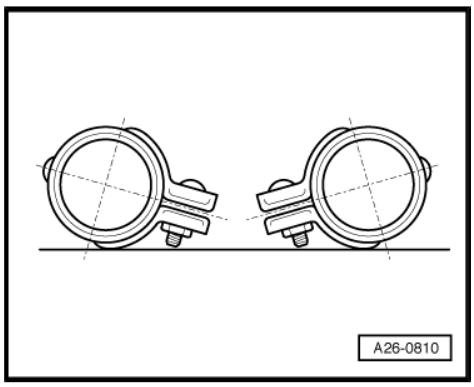

Aligning tailpipes

– Check clearance between tailpipes and bumper on both sides.
• Dimension -x- (left-side) = dimension -x- (right-side); tolerance max. 2 mm.
– If necessary, correct dimension -x- ...,

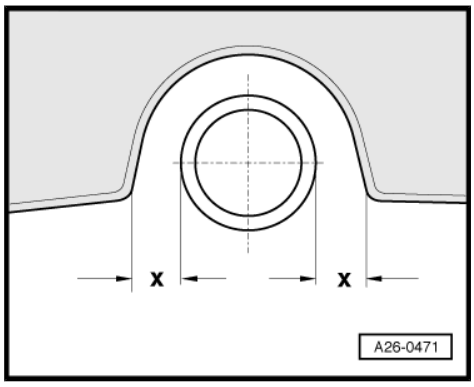

– ... by loosening nut -arrow- on strut between exhaust pipes.
– Adjust the distance between the rear silencers.
– Tighten nut to 23 Nm.

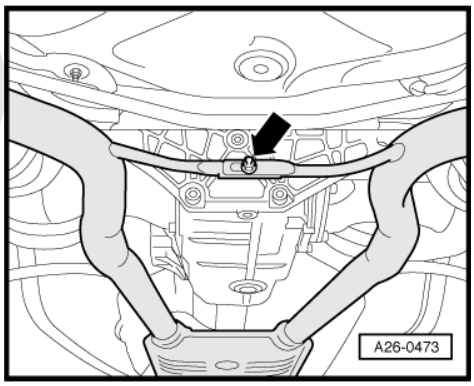

Protected by copyright. Copying for private or commercial purposes, in part or in whole, is not permitted unless authorised by AUDI AG. AUDI AG does not guarantee or accept any liability with respect to the correctness of information in this document. Copyright by AUDI AG.

– Check distances -y- and -z- between tailpipes and bumper.
- Dimension -y- = 18 ... 22 mm.
- Dimension -z- = 8 ... 12 mm.

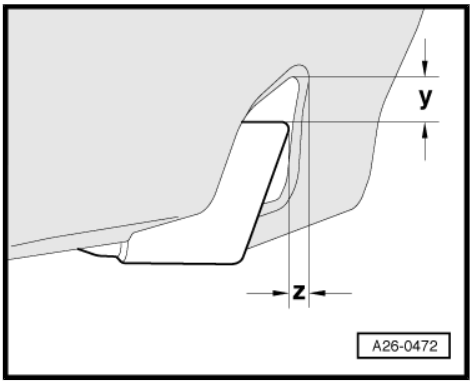

1.9 Checking exhaust system for leaks

– Start engine and run at idling speed.
– Plug tailpipes during leak test (e.g. with cloth or plug).
– Listen for noise at connection points (cylinder head/exhaust manifold, exhaust manifold/front exhaust pipe, etc.) to locate any leaks.
– Repair any leaks that are discovered.

Protected by copyright. Copying for private or commercial purposes, in part or in whole, is not permitted unless authorised by AUDI AG. AUDI AG does not guarantee or accept any liability with respect to the correctness of information in this document. Copyright by AUDI AG.

2 Servicing secondary air system

The secondary air system is designed to enable the catalytic converter to heat up and reach its operating temperature more quickly after a cold start.

2.1 Principle and function

Principle

Because of the over-enrichment of the mixture in the cold start phase, the percentage of unburned hydrocarbons in the exhaust gas is higher. The injection of secondary air improves the post-oxidation in the catalytic converter and thus reduces pollutant emissions. The heat produced by the post-oxidation considerably shortens the start-up time of the catalytic converter and significantly enhances the emission quality in the cold-running phase.

This document is for internal use only. The reproduction of this document, in whole, is not permitted. We do not represent that this document is complete and accept any liability with respect to its correctness and timeliness and its suitability for specific purposes. Copyright by AUDI AG.

Function

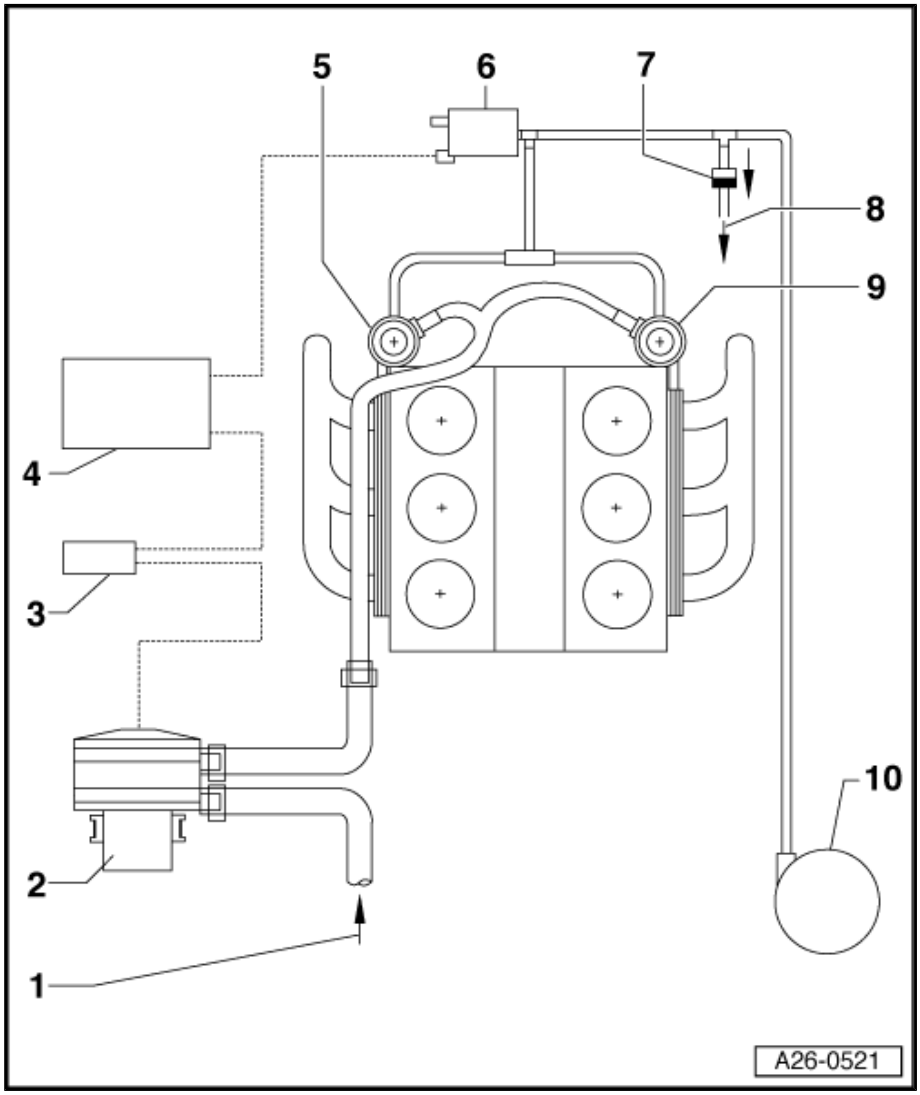

- In the cold-running phase the engine control unit -J623- -Item 4- activates the secondary air pump motor -V101- -Item 2- via the secondary air pump relay -J299- -Item 3-. Air will then reach the combination valves for secondary air system -5- and -9-.

- At the same time, the secondary air inlet valve -N112- -Item 6- will be activated, allowing vacuum pressure to reach the combination valves for secondary air system -5- and -9-. In this way, the combination valve opens a passage for the secondary air system to supply air to the exhaust ports in the cylinder head.

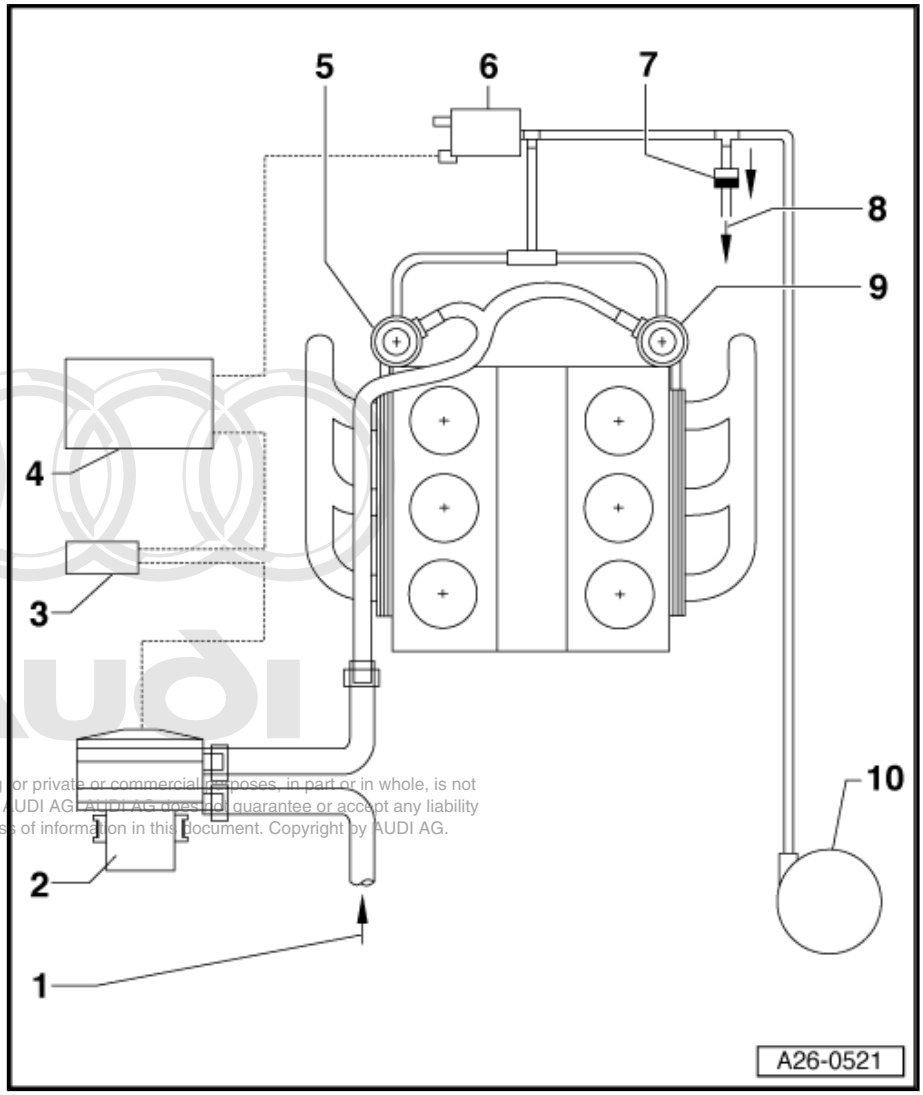

1 - From air cleaner housing

2 - Secondary air pump motor -V101-
- ❑ Fitting location ⇒ page 220
- ❑ Removing and installing ⇒ page 231

3 - Secondary air pump relay -J299-
- ❑ Fitting location ⇒ page 220

4 - Engine control unit -J623-

5 - Combination valve for secondary air (right-side)
- ❑ Fitting location ⇒ page 220
- ❑ Checking ⇒ page 232
- ❑ Removing and installing ⇒ page 236

6 - Secondary air inlet valve -N112-
- ❑ Fitting location ⇒ page 220

Protected by copyright. Copying for private or commercial purposes, in part or in whole, is not permitted unless authorised by AUDI AG. AUDI AG does not guarantee or accept any liability with respect to the correctness of information in this document. Copyright by AUDI AG.

7 - Non-return valve
- ❑ Installation position (light side/dark side) as shown in illustration. Arrow indicates direction of flow.

8 - To intake manifold

9 - Combination valve for secondary air (left-side)
- ❑ Fitting location ⇒ page 220
- ❑ Checking ⇒ page 232
- ❑ Removing and installing ⇒ page 235

10 - Vacuum reservoir
- ❑ Fitting location: in front left wheel housing beneath liner

Fitting location of secondary air inlet valve -N112-

- Inserted on retainer plate for solenoid valves at rear of engine -arrow-.

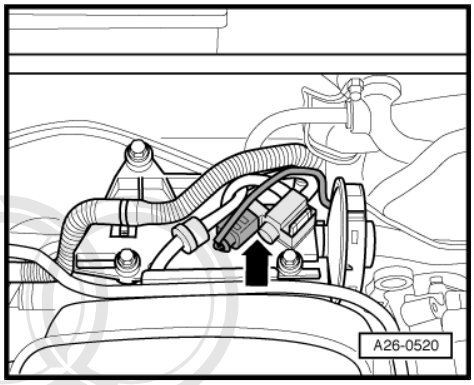

Fitting location of secondary air pump motor -V101-

- On longitudinal member (right-side, bottom) -arrow-.

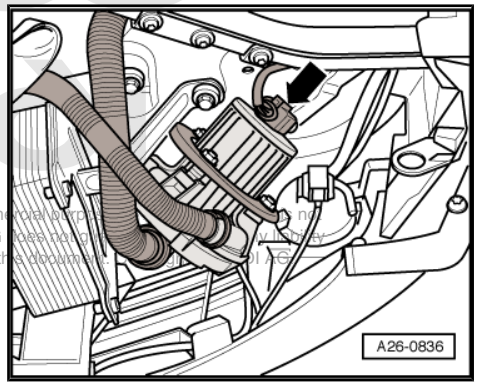

Protected by copyright. Copying for private or commercial purposes, in part or in whole, is not permitted unless authorised by AUDI AG. AUDI AG does not guarantee or accept any liability with respect to the correctness of information in this document. Copyright by AUDI AG.

Fitting location of secondary air pump relay -J299- and secondary air pump fuse -S130-

- In electronics box (plenum chamber).

1 - Secondary air pump relay -J299-

B - Secondary air pump relay -S130- (50 amp)

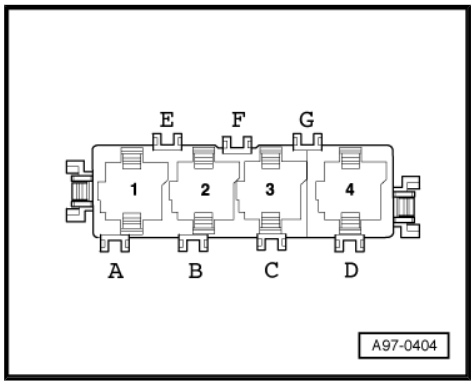

Combination valve for secondary air

- At rear of cylinder heads.

Note

Illustration shows valve on right side.

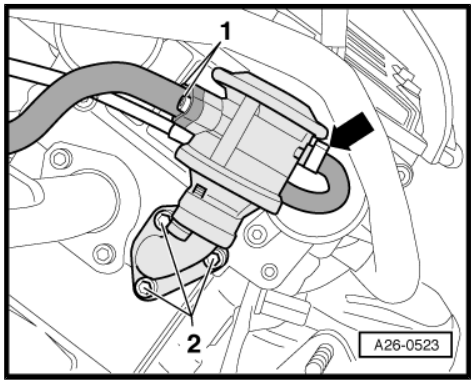

2.2 Checking secondary air inlet valve -N112-

Special tools and workshop equipment required

- Hand-held multimeter -V.A.G 1526 A-
- Voltage tester -V.A.G 1527 B-
- Adapter set -V.A.G 1594 A-
- Test box -V.A.G 1598/31-
- Vehicle diagnostic, testing and information system -VAS 5051 A- with diagnosis lead -VAS 5051/5A-

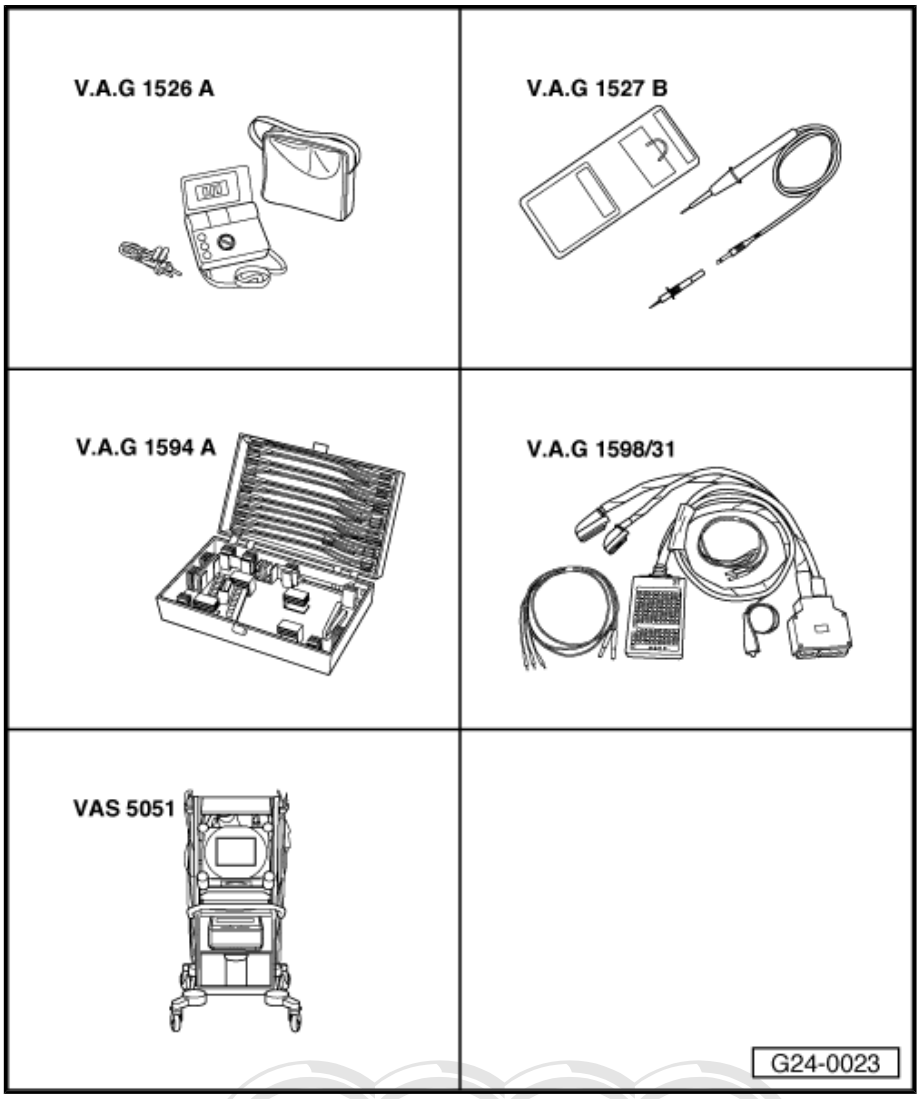

Test sequence

The secondary air inlet valve -N112- and the wiring connections are monitored by the engine control unit.

- Vehicle diagnostic, testing and information system -VAS 5051 A- with diagnosis lead -VAS 5051/5A- is connected; vehicle self-diagnosis and vehicle system “01 - Engine electronics” is selected. For this purpose, the ignition must be switched on.

– Read out fault memory of engine control unit.

If a fault relating to secondary air inlet valve -N112- is displayed:

Copying for private or commercial purposes, in part or in whole, is not permitted unless authorised by AUDI AG. AUDI AG does not guarantee or accept any liability with respect to the correctness of information in this document. Copyright by AUDI AG.

– Pull off rear engine cover -arrows-.

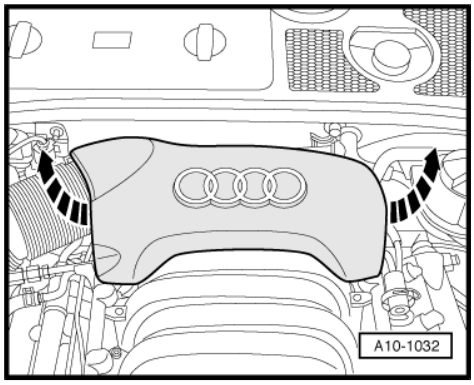

– Disconnect hoses from secondary air inlet valve -N112- -arrow-; leave electrical connector attached.

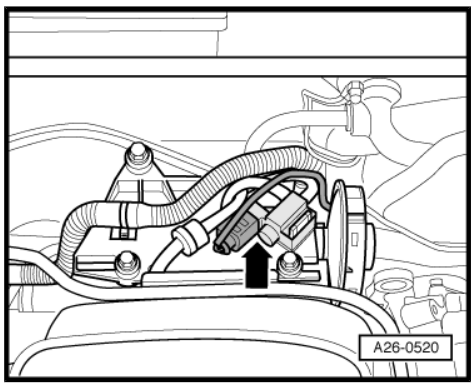

– Connect auxiliary hose to the valve connector marked with an arrow.

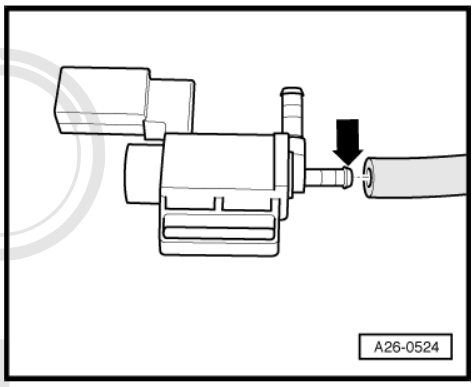

Audi AG, Ingolstadt, Germany. Technical data/specifications valid for Germany. For private or commercial purposes, in part or in whole, is not permitted unless authorised by AUDI AG. AUDI AG does not guarantee or accept any liability with respect to the correctness of information in this document. Copyright by AUDI AG.

- Vehicle diagnostic, testing and information system - VAS 5051 A- with diagnosis lead -VAS 5051/5A- is connected; vehicle self-diagnosis and vehicle system “01 - Engine electronics” is selected. For this purpose, the ignition must be switched on.

– Under selection menu -1- select the diagnostic function “03 - Final control diagnosis”.

– Press the button ⇨ until the secondary air inlet valve -N112- is actuated.

- The valve should click ...
- ... and should open and close (check by blowing into the auxiliary hose).

– Exit function “03 - Final control diagnosis” by pressing the ⇦ key.

– Switch off ignition.

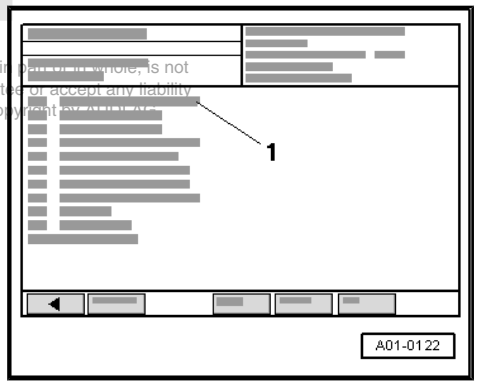

If valve does not open or close correctly:

– Renew secondary air inlet valve -N112- .

Checking internal resistance

– Unplug connector from secondary air inlet valve -N112- -arrow-.

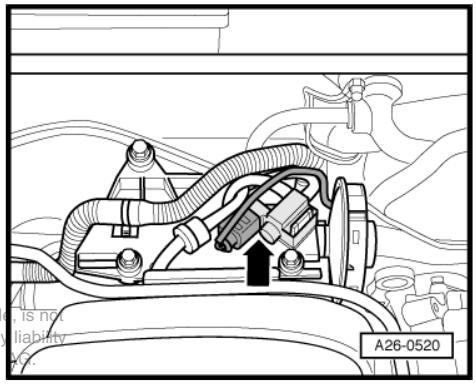

Protected by copyright. Copying for private or commercial purposes, in part or in whole, is not permitted unless authorised by AUDI AG. AUDI AG does not guarantee or accept any liability with respect to the correctness of information in this document. Copyright by AUDI AG.

– Connect multimeter (resistance measuring range) to valve.

• Specification: 25 ... 35 Ω

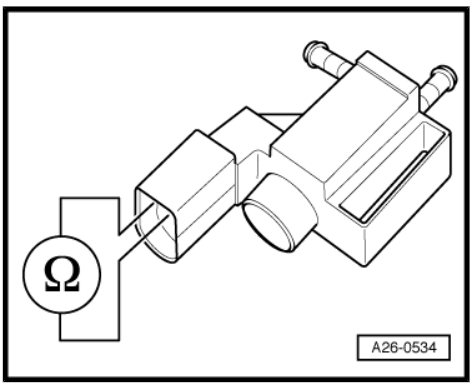

If the specification is not attained:

– Renew secondary air inlet valve -N112- .

Checking voltage supply

Note

♦ *Fuse for secondary air inlet valve OK. ⇒ Current flow diagrams, Electrical fault finding and Fitting locations.*

♦ *Fuel pump relay OK.*

Note

The secondary air inlet valve -N112- receives its power supply via the fuel pump relay.

– Connect voltage tester -V.A.G 1527 B- as follows:

Connector Contact	Measure against
-1-	Engine earth

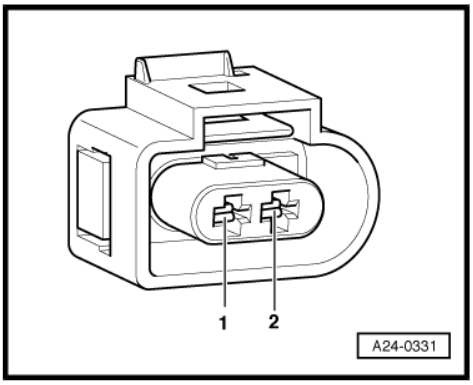

– Operate the starter briefly.

• The LED should light up.

– Switch off ignition.

If the LED does not light up:

– Use current flow diagram to check for open circuit in wiring from contact 1 of connector via fuse to fuel pump relay -J17- .

– If necessary repair wiring connection.

Checking activation

– Connect voltage tester - V.A.G 1527 B- to contacts -1- (plus) and -2- of the connector.

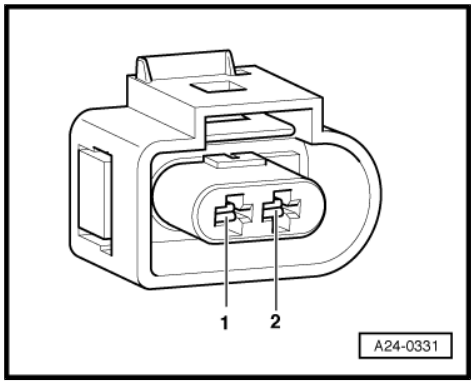

- Vehicle diagnostic, testing and information system - VAS 5051 A- with diagnosis lead -VAS 5051/5A- is connected; vehicle self-diagnosis and vehicle system “01 - Engine electronics” is selected. For this purpose, the ignition must be switched on.

– Under selection menu -1- select the diagnostic function “03 - Final control diagnosis”.

– Press the button ⇨ until the secondary air inlet valve -N112- is actuated.

- The LED should flash.

– Exit function “03 - Final control diagnosis” by pressing the ⇦ key.

– Switch off ignition.

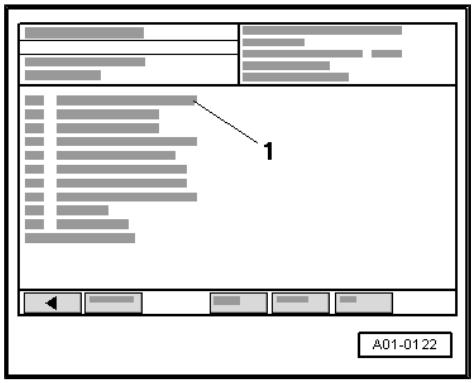

If the LED lamp does not flash or lights up continuously:

– Connect test box -V.A.G 1598/31- to connectors of wiring harness; do not connect engine control unit. Connect earth clip of test box to earth ⇒ Motronic injection and ignition system (6-cyl.); Rep. Gr. 24 .

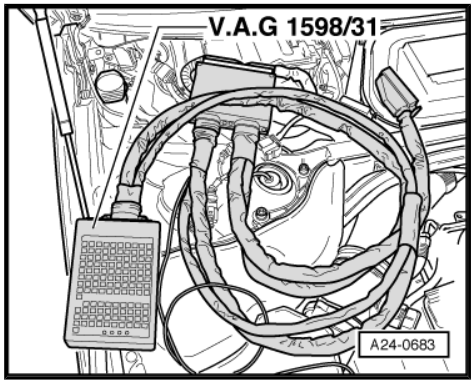

– Check for open circuit and short to positive or earth in the following wiring:

Connector Contact	Test box - V.A.G 1598/31- Socket
-2-	44

– If necessary repair wiring connection.

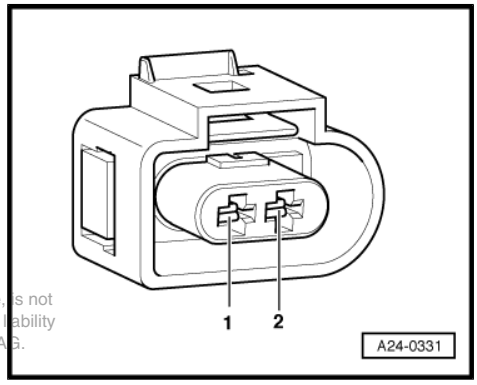

Protected by copyright. Copying for private or commercial purposes, in part or in whole, is not permitted unless authorised by AUDI AG. AUDI AG does not guarantee or accept any liability with respect to the correctness of information in this document. Copyright by AUDI AG.

2.3 Checking secondary air pump relay -J299- and activation

Special tools and workshop equipment required

- Hand-held multimeter -V.A.G 1526 A-
- Voltage tester -V.A.G 1527 B-
- Adapter set -V.A.G 1594 A-
- Test box -V.A.G 1598/31-
- Vehicle diagnostic, testing and information system -VAS 5051 A- with diagnosis lead -VAS 5051/5A-

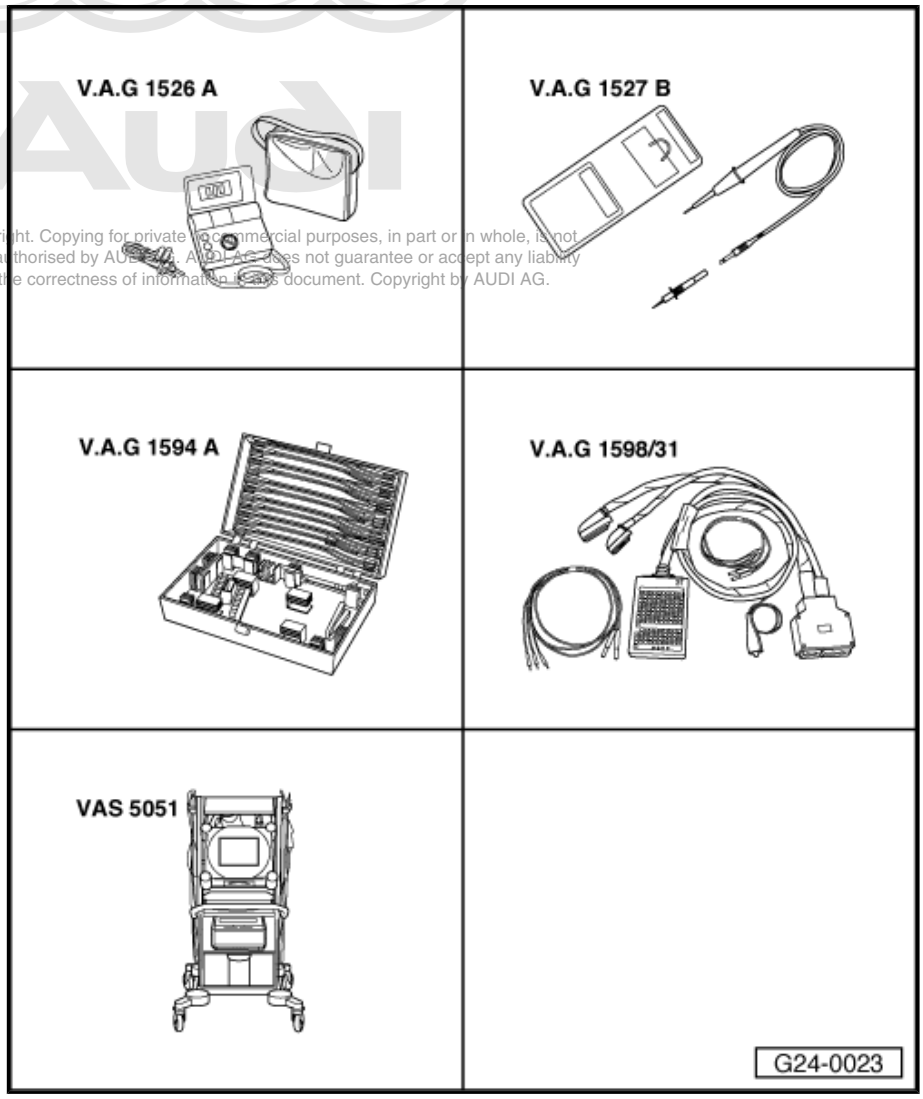

Reproduction and copyright. Copying for private or commercial purposes, in part or in whole, is not permitted unless authorised by AUDI AG. AUDI AG does not guarantee or accept any liability with respect to the correctness of information in this document. Copyright by AUDI AG.

Test sequence

- Vehicle diagnostic, testing and information system -VAS 5051 A- with diagnosis lead -VAS 5051/5A- is connected; vehicle self-diagnosis and vehicle system “01 - Engine electronics” is selected. For this purpose, the ignition must be switched on.

– Under selection menu -1- select the diagnostic function “03 - Final control diagnosis”.

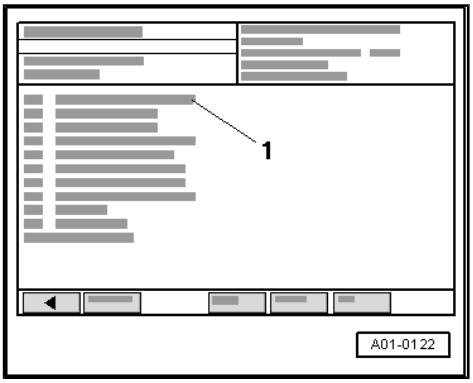

– Press the button ⇨ until the secondary air pump relay -J299- is actuated.

• The secondary air pump relay -J299- -Item 1- on relay carrier in electronics box (plenum chamber) should pick up (click) intermittently ...

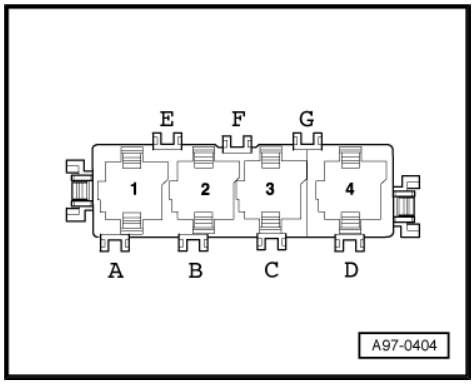

• ... and the secondary air pump motor -V101- -arrow- should run intermittently.

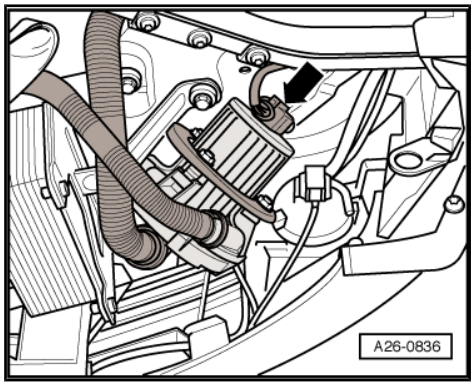

– Exit function “03 - Final control diagnosis” by pressing the ⇦ key.

– Switch off ignition.

A - If the relay does not pick up:

– Checking voltage supply of secondary air pump relay -J299- ⇒ page 226 .

– Check activation of secondary air pump relay ⇒ page 228 .

B - If the relay picks up but the secondary air pump motor -V101- does not run:

– Check voltage supply of secondary air pump motor -V101- ⇒ page 229 .

2.4 Checking voltage supply of secondary air pump relay -J299- .

– Detach plenum chamber cover (right-side) -2-.

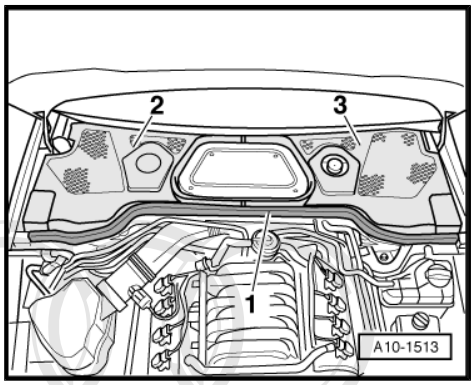

Note

Ignore items marked -1- and -3-.

– Unscrew bolts -arrows- and pull out engine control unit towards front.

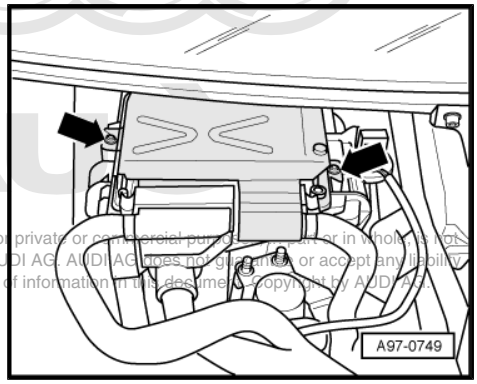

Protected by copyright. Copying for private or commercial purposes, in part or in whole, is not permitted unless authorised by AUDI AG. AUDI AG does not guarantee or accept any liability with respect to the correctness of information in this document. Copyright by AUDI AG.

– Turn air quality sensor -G238- -Item 1- 90° anti-clockwise and detach it from bracket.

– Release retaining clips -arrows-.

– Open electronics box (plenum chamber) cover slightly and pull off to front.

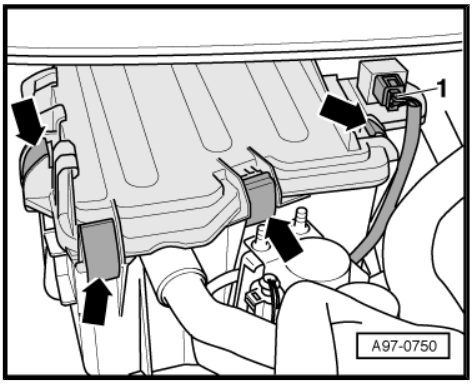

– Disconnect secondary air pump relay -J299- -Item 1-.

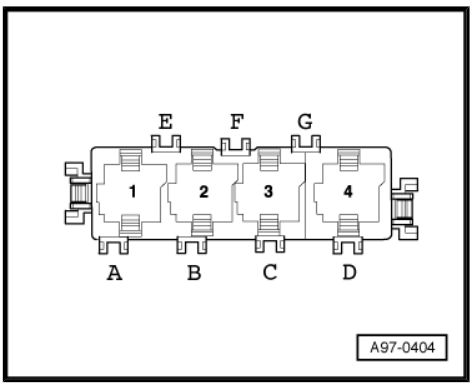

– Connect multimeter (voltage measurement range) as follows:

Relay carrier, electronics box (plenum chamber), position 1 contact	Measure against
-2-	Engine earth

• Specification: approx. battery voltage

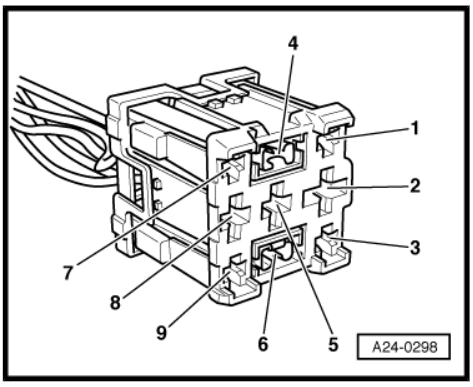

If specification is not reached:

– Carry out the following checks:

♦ Check secondary air pump fuse -S130- (50 A) -Item B- on relay carrier in electronics box (plenum chamber).

♦ Use current flow diagram to check for open circuit in wiring connection leading from battery-+ (terminal 30), via secondary air pump fuse -S130- , to secondary air pump relay -J299- -Item 1- on relay carrier in electronics box (plenum chamber) .

– If necessary repair wiring connection.

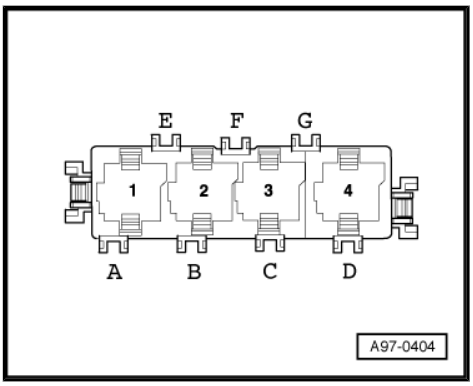

Protected by copyright. Copying for private or commercial purposes, in part or in whole, is not permitted unless authorised by AUDI AG. AUDI AG does not guarantee or accept any liability with respect to the correctness of information in this document. Copyright by AUDI AG.

– Connect multimeter (voltage measurement range) as follows:

Relay carrier, electronics box (plenum chamber), position 1 contact	Measure against
-6-	Engine earth

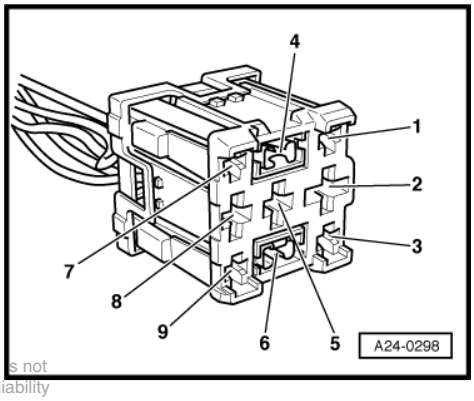

– Operate the starter briefly.

• Specification: approx. battery voltage

– Switch off ignition.

Protected by copyright. Copying for private or commercial purposes, in part or in whole, is not permitted unless authorised by AUDI AG. AUDI AG does not guarantee or accept any liability with respect to the correctness of information in this document. Copyright by AUDI AG.

If specification is not reached:

– Carry out the following checks:

♦ Check fuse -SC 5- , position -5- on fuse carrier in dash panel (right-side).

♦ Use current flow diagram to check for open circuit in wiring connection leading from relay for secondary air pump -J299- (on relay carrier in electronics box, plenum chamber), via fuse -SC 5- (position -5- on fuse carrier in dash panel (right-side), to fuel pump relay -J17-

– If necessary repair wiring connection.

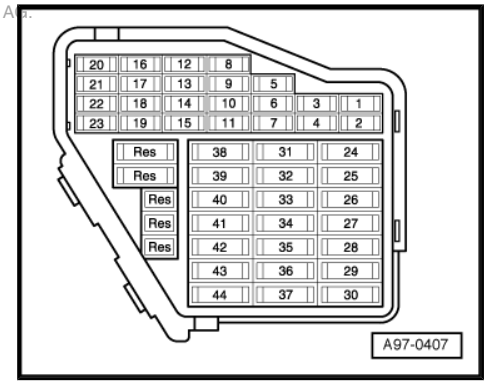

2.5 Checking activation of secondary air pump relay

• Secondary air pump relay -J299- disconnected.

– Connect voltage tester -V.A.G 1527 B- as follows:

Relay carrier, electronics box (plenum chamber), position 1 contact	Measure against
-4-	Engine earth

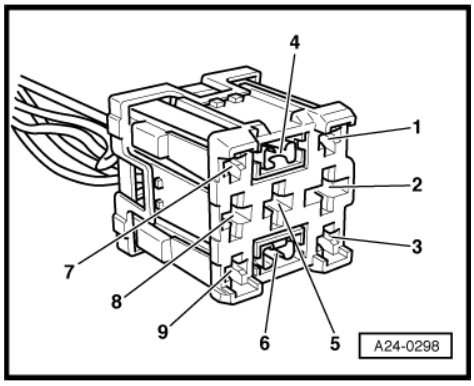

• Vehicle diagnostic, testing and information system - VAS 5051 A- with diagnosis lead -VAS 5051/5A- is connected; vehicle self-diagnosis and vehicle system “01 - Engine electronics” is selected. For this purpose, the ignition must be switched on.

– Under selection menu -1- select the diagnostic function “03 - Final control diagnosis”.

– Press the button ⇨ until the secondary air pump relay -J299- is actuated.

• The LED should flash.

– Exit function “03 - Final control diagnosis” by pressing the ⇦ key.

– Switch off ignition.

If the LED does not flash:

– Connect test box - V.A.G 1598/31- to connectors of wiring harness; do not connect engine control unit. Connect earth clip of test box to earth ⇒ Motronic injection and ignition system (6-cyl.); Rep. Gr. 24 .

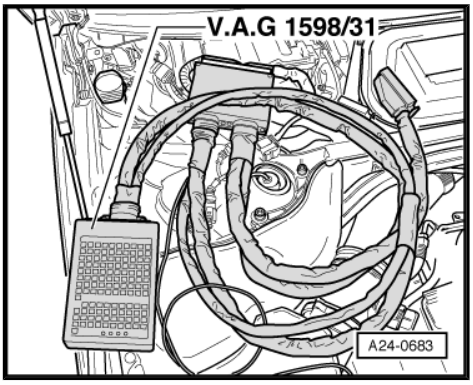

– Check for open circuit and short to positive or earth in the following wiring:

Relay carrier, electronics box (plenum chamber), position 1 contact	Test box -V.A.G 1598/31- Socket
-4-	46

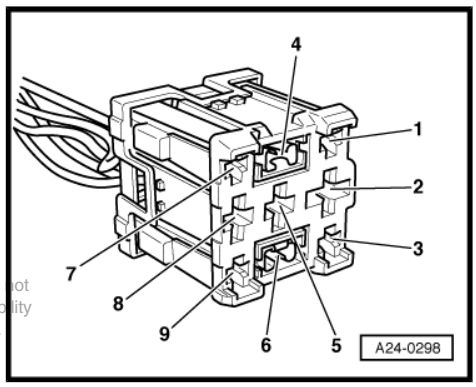

– If necessary repair wiring connection.

If no fault is found:

– Renew secondary air pump relay -J299- .

Protected by copyright. Copying for private or commercial purposes, in part or in whole, is not permitted unless authorised by AUDI AG. AUDI AG does not guarantee or accept any liability with respect to the correctness of information in this document. Copyright by AUDI AG.

2.6 Checking voltage supply of secondary air pump motor -V101-

– Activate jacking mode ⇒ Running gear, front-wheel drive and four-wheel drive; Rep. Gr. 43 ; Operating the air suspension .

– Vehicles with auxiliary heater: remove bolts -arrows- securing exhaust pipe for auxiliary/additional heater to noise insulation.

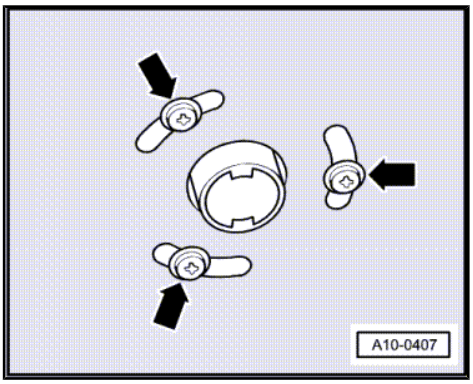

– Release fasteners -1- and remove front noise insulation.

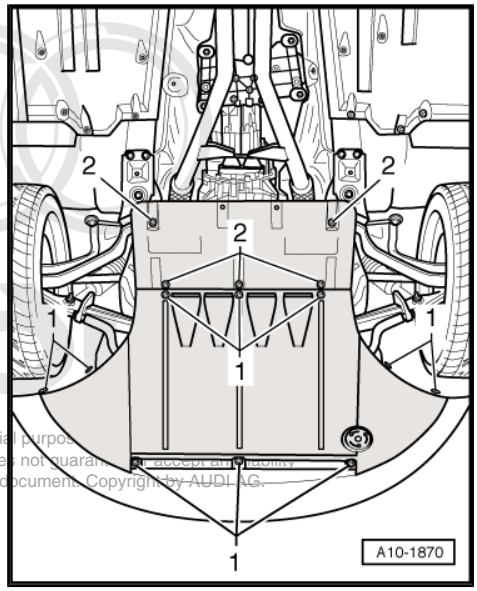

Protected by copyright. Copying for private or commercial purposes, in part, is not permitted unless authorised by AUDI AG. AUDI AG does not guarantee or accept any liability with respect to the correctness of information in this document. Copyright by AUDI AG.

– Unplug electrical connector -arrow- at secondary air pump motor -V101- .

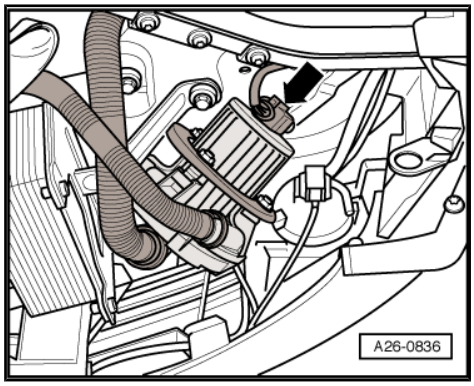

– Connect voltage tester -V.A.G 1527 B- between contacts -1- and -2-.

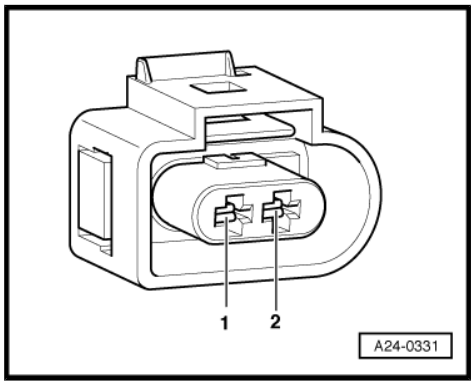

- Vehicle diagnostic, testing and information system - VAS 5051 A- with diagnosis lead -VAS 5051/5A- is connected; vehicle self-diagnosis and vehicle system “01 - Engine electronics” is selected. For this purpose, the ignition must be switched on.

– Under selection menu -1- select the diagnostic function “03 - Final control diagnosis”.

– Press the button ⇨ until the secondary air pump relay -J299- is actuated.

- The LED should flash.

– Exit function “03 - Final control diagnosis” by pressing the ⇦ key.

– Switch off ignition.

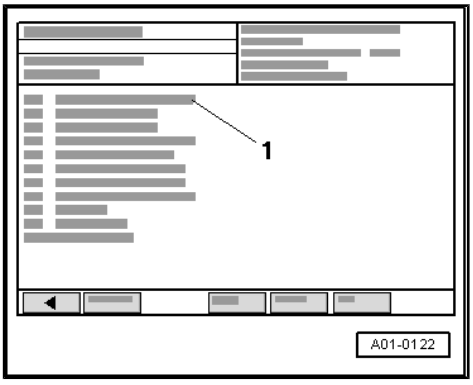

If the LED does not flash:

– Carry out the following checks:

♦ Use current flow diagram to check for open circuit in wiring leading from contact 2 of connector going to secondary air pump relay -J299- on relay carrier in electronics box (plenum chamber), position -2-.

♦ Use current flow diagram to check for open circuit in wiring leading from contact 1 of connection to earth.

– If necessary repair wiring connection.

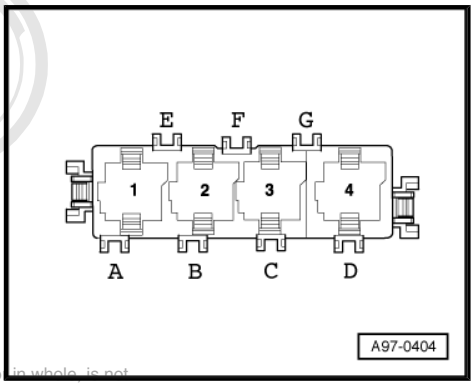

If no fault is found:

– Renew secondary air pump motor -V101- .

Protected by copyright. Copying for private or commercial purposes, in part or in whole, is not permitted unless authorised by AUDI AG. AUDI AG does not guarantee or accept any liability with respect to the correctness of information in this document. Copyright by AUDI AG.

Additional steps required:

– Deactivate jacking mode ⇒ Running gear, front-wheel drive and four-wheel drive; Rep. Gr. 43 ; Operating the air suspension .

2.7 Removing and installing secondary air pump motor -V101-

Removing

– Activate jacking mode ⇒ Running gear, front-wheel drive and four-wheel drive; Rep. Gr. 43 ; Operating the air suspension .

– Vehicles with auxiliary heater: remove bolts -arrows- securing exhaust pipe for auxiliary/additional heater to noise insulation.

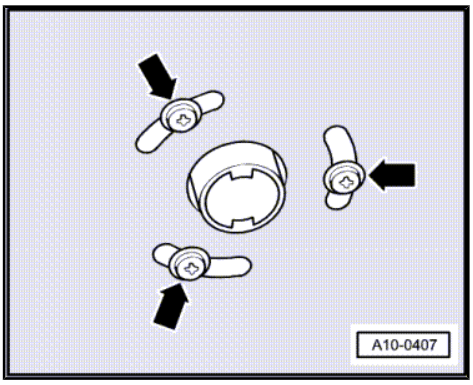

– Release fasteners -1- and remove front noise insulation.

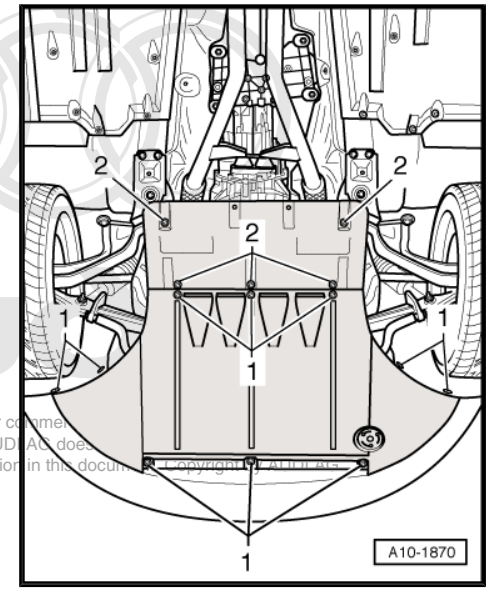

Protected by copyright. Copying for private or commercial purposes is not permitted unless authorised by AUDI AG. AUDI AG does not guarantee or accept any liability with respect to the correctness of information in this document. Copyright by AUDI AG.

– Detach air hoses -1- and -5-.

– Detach electrical connector -3-.

– Unscrew nuts -2- and -4- and detach secondary air pump motor -V101- from bracket.

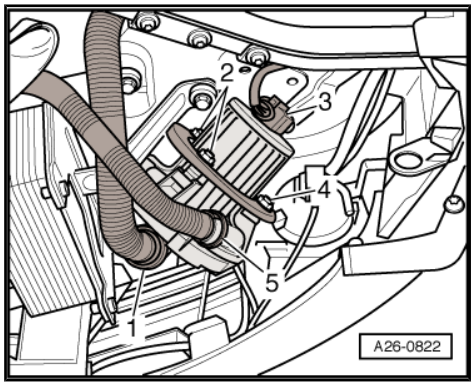

Installing

Installation is carried out in the reverse order; note the following:

– Deactivate jacking mode ⇒ Running gear, front-wheel drive and four-wheel drive; Rep. Gr. 43 ; Operating the air suspension .

Tightening torque

Component	Nm
Secondary air pump motor -V101- to bracket	10

2.8 Checking combination valve for secondary air system for proper operation and leakage

Special tools and workshop equipment required

♦ Hand-operated vacuum pump -V.A.G 1390-

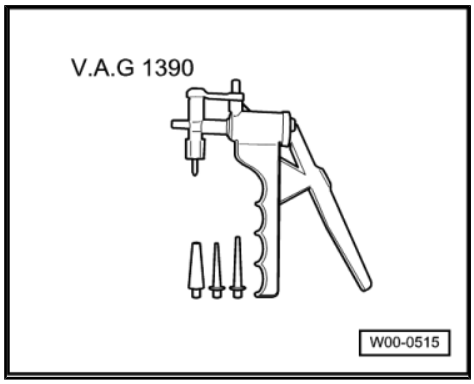

Test conditions

- Vacuum hoses and hose connections do not leak.
- Vacuum hoses are not clogged.

Test sequence

– Activate jacking mode ⇒ Running gear, front-wheel drive and four-wheel drive; Rep. Gr. 43 ; Operating the air suspension .

– Pull off rear engine cover -arrows-.

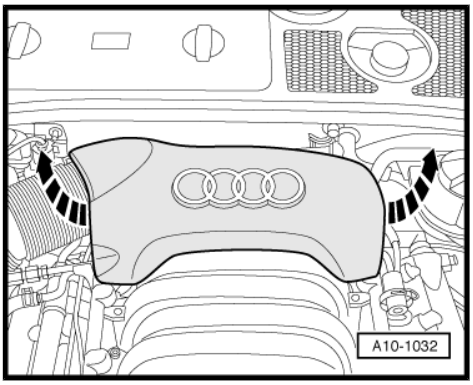

Protected by copyright. Copying for private or commercial purposes, in part or in whole, is not permitted without the prior written consent of AUDI AG. No liability with respect to the correctness of information in this document. Copyright by AUDI AG.

– Disconnect vacuum hose -1- or -2- from combination valve you want to test at Y-piece.

– Connect the hand vacuum pump -V.A.G 1390- to vacuum hose of combination valve you want to check.

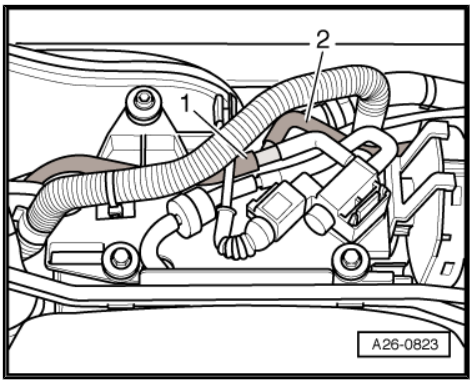

– Vehicles with auxiliary heater: remove bolts -arrows- securing exhaust pipe for auxiliary/additional heater to noise insulation.

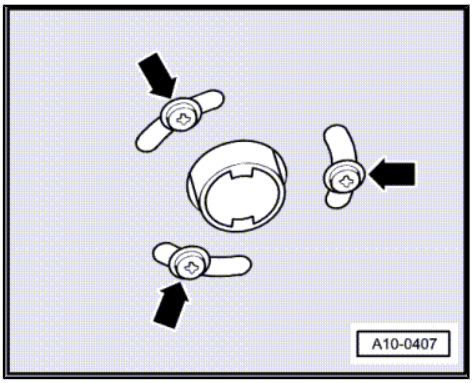

– Release fasteners -1- and remove front noise insulation.

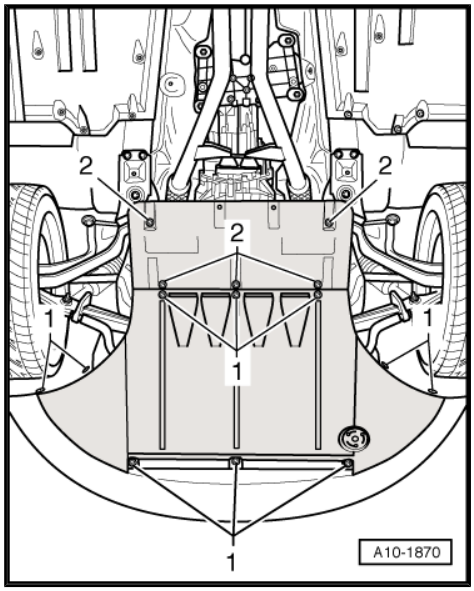

– Detach pressure hose -5- from secondary air pump motor -V101- and blow into it with light pressure (do not use compressed air).

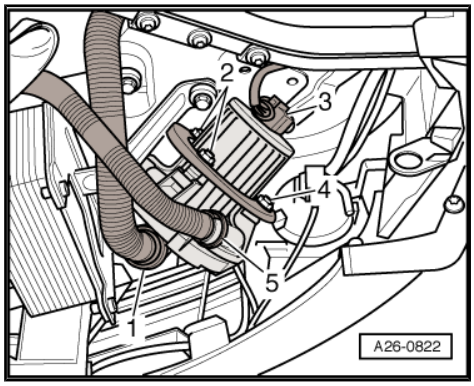

Note

Ignore -Items 1 ... 4-.

- Both combination valves must be closed and it must not be possible to blow through the hose.

– Operate the hand vacuum pump.

- The combination valve should open; it should now be possible to blow through the hose.

Protected by copyright. Copying for private or commercial purposes, in part or in whole, is not permitted unless authorised by AUDI AG. AUDI AG does not guarantee or accept any liability with respect to the correctness of information in this document. Copyright by AUDI AG.

If combination valve does not open:

– Renew combination valve for secondary air system: on left-side ⇒ page 235 , on right-side ⇒ page 236 .

Additional steps required:

– Deactivate jacking mode ⇒ Running gear, front-wheel drive and four-wheel drive; Rep. Gr. 43 ; Operating the air suspension .

2.9 Removing and installing combination valve for secondary air system (left-side)

Removing

– Pull off rear engine cover -arrows-.

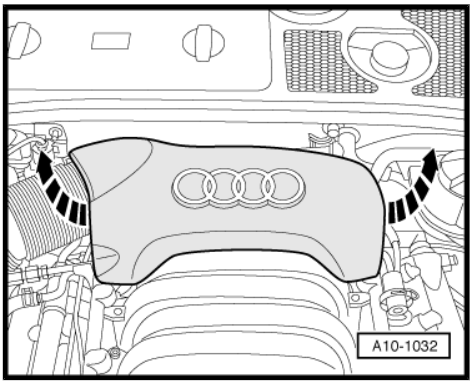

– Unscrew bolts for solenoid valve retaining plate -3- (-arrows-).

– Detach air intake hose -1- at air mass meter -G70- .

– Pull hose -4- off air duct -2-.

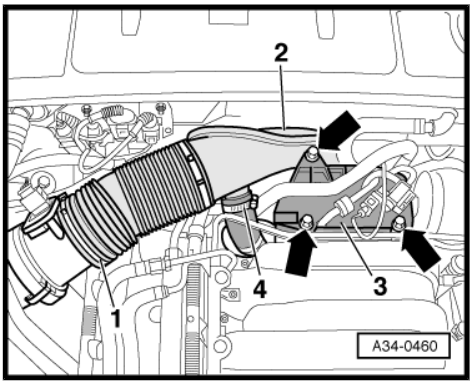

– Unscrew bolt -arrow- and pull air duct -2- off throttle valve module -J338- .

– If fitted, pull hose -1- off at air duct.

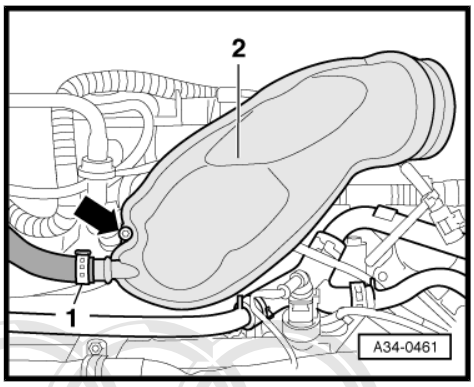

Note

For illustration purposes, the air duct is shown from rear and with engine removed.

– Unplug electrical connectors -1- and -2- at Hall senders -G163- and -G301- .

– Disconnect crankcase breather hose -3- at cylinder head cover.

– Remove heat shield for connections from bulkhead (left-side).

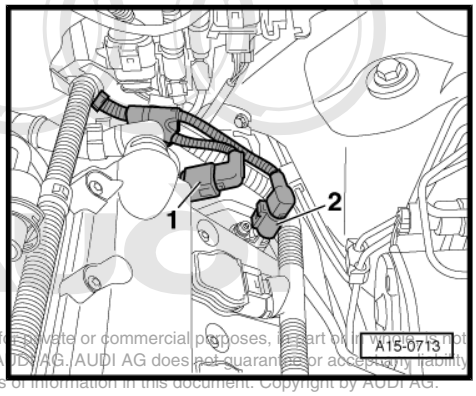

Protected by copyright. Copying for private or commercial purposes, in part or in whole, is not permitted unless authorised by AUDI AG. AUDI AG does not guarantee or accept any liability with respect to the correctness of information in this document. Copyright by AUDI AG.

– Unscrew bolts -1- on flange of combination valve for secondary air.
– Loosen nut -3- in several turns.
– Unscrew bolts -2- and detach vacuum hose -arrow-.
– Detach combination valve.

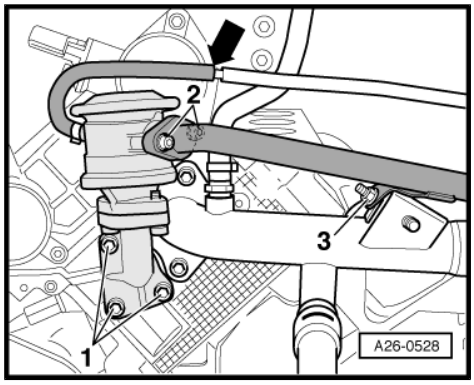

Note

Shown from rear with engine removed for illustration purposes.

Installing

Installation is carried out in the reverse order; note the following:

Note

Renew seals and gaskets.

Tightening torques

Component		Nm
Combination valve to cylinder head		10
Connecting pipe to	Combination valve	10
	Coolant pipe	10

2.10 Removing and installing combination valve for secondary air system (right-side)

Removing

– Pull off rear engine cover -arrows-.

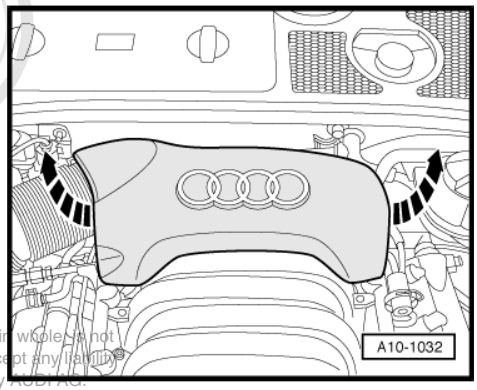

Protected by copyright. Copying for private or commercial purposes, in part or in whole, is not permitted unless authorised by AUDI AG. AUDI AG does not guarantee or accept any liability with respect to the correctness of information in this document. Copyright by AUDI AG.

– Unscrew bolts for solenoid valve retaining plate -3- (-arrows-).
– Detach air intake hose -1- at air mass meter -G70- .
– Pull hose -4- off air duct -2-.

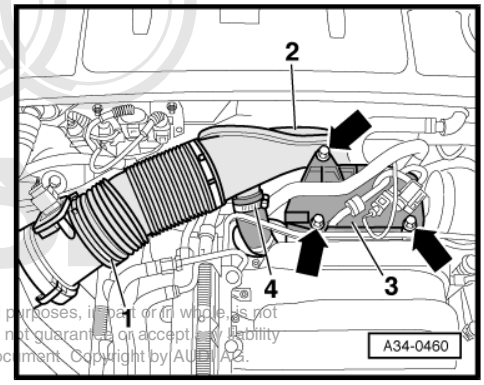

Protected by copyright. Copying for private or commercial purposes, in part or in whole, is not permitted unless authorised by AUDI AG. AUDI AG does not guarantee or accept any liability with respect to the correctness of information in this document. Copyright by AUDI AG.

– Unscrew bolt -arrow- and pull air duct -2- off throttle valve module -J338- .
– If fitted, pull hose -1- off at air duct.

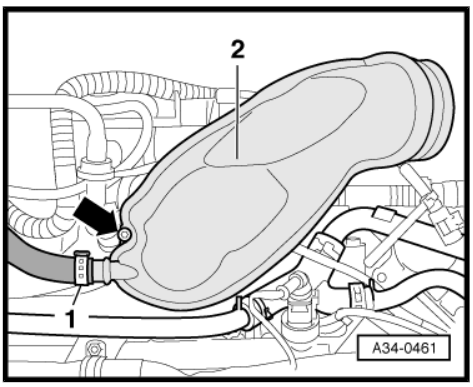

Note

Illustration shows air duct from rear with engine removed.

– Unscrew bolts -1- and -2- and detach combination valve.
– Detach vacuum hose -arrow-.

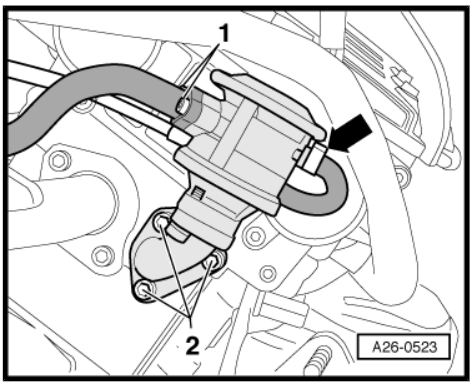

Installing

Installation is carried out in the reverse order; note the following:

Note

Renew seals and gaskets.

Tightening torques

Component	Nm
Combination valve to cylinder head	10
Connecting pipe to combination valve	10